YAMAHA

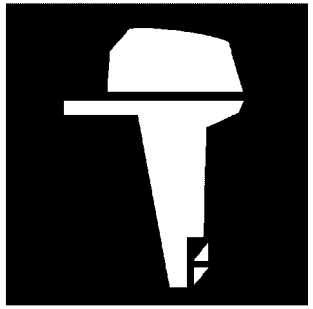

PARTS CATALOGUE
CATALOGUE DE PIECES DETACHEES

F350AET'19 (6AWD)
FL350AET'19 (6AXD)

YAMAHA
GENUINE
Parts & Accessories

1T6AW-300FA

( )

F350AET/FL350AET
PARTS CATALOGUE
©2024 by Yamaha Motor Co., Ltd.
1st edition, February 2024
All rights reserved.
Any reprinting or unauthorized use
without the written permission of
Yamaha Motor Co., Ltd.
is expressly prohibited.
Printed in Japan.

F350AET/FL350AET
CATALOGUE DE PIECES DETACHEES
©2024 par Yamaha Motor Co., Ltd.
1re édition, février 2024
Tous droits réservés
Toute réimpression ou utilisation
non autorisée sans la permission écrite
de Yamaha Motor Co., Ltd.
est formellement interdite.
Imprimé au Japon

FOREWORD

This Parts Catalogue is related to the parts for the model(s) on the cover page. When you are ordering replacement parts, please refer to this Parts Catalogue and quote both part numbers and part names correctly.

1. Modifications or additions which have been made after the issue of the Parts Catalogue will be announced in the Parts News.
   It is advisable that you make the necessary corrections to the Parts Catalogue according to the Parts News.

2. Abbreviations
   The following abbreviations are used in this Parts Catalogue.
   "UR" Use specified parts number.
   "UN" Use as many as needed.
   "AP" Alternate Parts
   "LM" Locally Made (Parts need to be ordered locally)
   "F#" Frame No. (Applicable machine No.)
   "O/S" Over Size

3. The number of components for assembly
   - Parts, which are to be supplied in an assembly, are listed with a dot (.) in front of the part name as shown below.
   - The numeral appearing to the right of each component part indicates the quantity of parts for each assembly unit.

PART NO.	DESCRIPTION	Q'TY	REMARKS
2F5–83310–60	FRONT FLASHER LIGHT ASSY	2	
115–83311–60	.BULB (6V–18W)	1	

4. Applicable colours of graphics are represented in the "REMARKS" as shown below.

PART NO.	DESCRIPTION	Q'TY	REMARKS
2N4–24110–00–X5	FUEL TANK COMP.	2	MXR
3J1–24240–10	.GRAPHIC, FUEL TANK	1	FOR MXR

5. Note that the illustrations for reference in finding parts numbers are not to be used for assembling. When assembling, please use the applicable service manual.

6. The asterisk (*) before a reference number indicates modified items after the first edition.

7. Applicable Serial No.
   Engine Serial No.

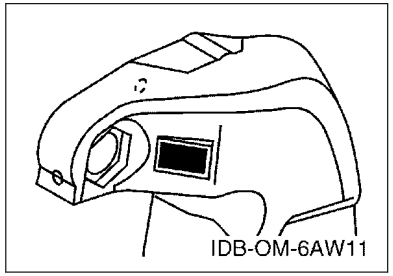

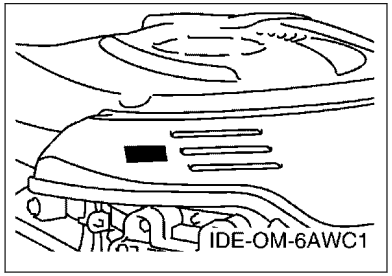

8. Applicable Engine Starting Serial No.

Model	Serial No.	Model	Serial No.
F350A	6AW-1019126	FL350A	6AX-1008057

9. Applicable Colour Code

Abbreviation	Colour Name	Colour Code
DBN1	DARK BLUISH GRAY 1	008D

10. Quantity Column Information

Column No.	Name Of Q'ty Column	Applicable Model
1	6AWD	F350AET
2	6AXD	FL350AET

AVANT–PROPOS

Ce catalogue de pièces détachées concerne les pièces pour le(s) modèle(s) indiqué(s) sur la page de couverture. Lorsque vous commandez des pièces de rechange, veuillez vous référer à ce catalogue de pieces détachées et indiquer clairement les numéros et les noms des pièces détachées.

1. Les modifications ou ajouts ayant été effectués après la parution du catalogue de pièces détachées seront décrits dans les Bulletins d'information concernant les pièces détachées.
   Il est recommandé que vous apportiez les corrections nécessaires au catalogue des pièces détachées en vous référant aux Bulletins d'information.

2. Abréviations
   Dans ce catalogue, les abréviations suivantes sont utilisées:
   "UR" Utiliser le numéro de pièces spécifié.
   "UN" Utiliser autant que nécessaire.
   "AP" Pièces de substitution
   "LM" Fabrication locale (les pièces doivent être commandées localement.)
   "F#" N° de cadre (applicable au N° de série)
   "O/S" Surdimensionné

3. Nombre de pièces d'un assemblage
   - Les pièces fournies comme composants d'un assemblage sont précédées d'un point (.) de la manière indiquée ci–dessous.
   - Le chiffre apparaissant à la droite de chaque composant indique la quantité de pièces pour chaque unité d'assemblage.

N° PIECES	DESCRIPTION	QTE	REMARQUES
2F5–83310–60	ENS. CLIGNOTANT AVANT	2	
115–83311–60	.AMPOULE (6V–18W)	1	

4. Les couleurs concernant les graphiques sont indiquées dans la colonne "REMARQUES", comme indiqué ci–dessous.

N° PIECES	DESCRIPTION	QTE	REMARQUES
2N4–24110–00–X5	RESERVOIR A ESSENCE.	2	MXR
3J1–24240–10	.GRAPHIQUE	1	POUR MXR

5. Veuillez noter que les illustrations sont indiquées à titre de référence pour trouver les numéros de pièces, non pour être utilisées lors de l'assemblage. Lors de l'assemblage, veuillez utiliser le manuel d'entretien adéquat.

6. L'astérisque (*) placé devant un numéro de référence indique des éléments qui ont été modifiés après la première édition.

7. N° de série applicable
   N° de Série du moteur

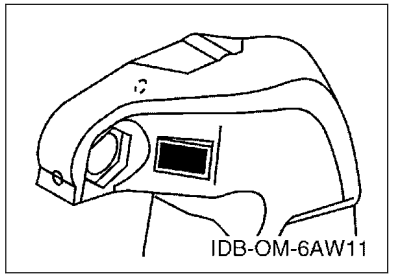

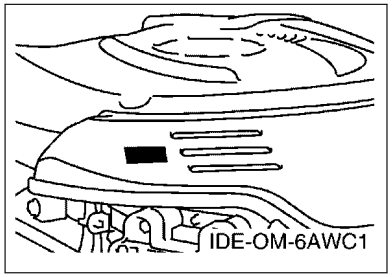

8. N° de série initial du moteur applicable

Modèle	N° de série	Modèle	N° de série
F350A	6AW-1019126	FL350A	6AX-1008057

9. Code couleur applicable

Abréviation	Nom de la couleur	Code couleur
DBN1	DARK BLUISH GRAY 1	008D

10. Informations relatives à la colonne Quantité

N° de la colonne	Nom de la colonne Qté	Modèle applicable
1	6AWD	F350AET
2	6AXD	FL350AET

CONTENTS

SCHEDULED SERVICE PARTS.....1
TOP COWLING.....2
CYLINDER & CRANKCASE 1.....3
CRANKSHAFT & PISTON.....5
CYLINDER & CRANKCASE 2.....6
CYLINDER & CRANKCASE 3.....8
CYLINDER & CRANKCASE 4.....9
VALVE.....10
INTAKE 1.....13
INTAKE 2.....15
INTAKE 3.....16
THROTTLE BODY ASSY 1.....18
THROTTLE BODY ASSY 2.....19
FUEL INJECTION PUMP 1.....20
FUEL INJECTION PUMP 2.....22
FUEL 1.....23
FUEL 2.....25
GENERATOR.....26
ELECTRICAL 1.....27
ELECTRICAL 2.....28
ELECTRICAL 3.....30
ELECTRICAL 4.....31
ELECTRICAL 5.....33
STARTING MOTOR.....35
BOTTOM COWLING 1.....36
BOTTOM COWLING 2.....38
BOTTOM COWLING 3.....40
CONTROL.....41
BRACKET 1.....42
BRACKET 2.....44
POWER TRIM & TILT ASSY 1.....46
POWER TRIM & TILT ASSY 2.....49
UPPER CASING.....50
OIL PAN.....53
LOWER CASING & DRIVE 1.....54
LOWER CASING & DRIVE 2.....58
LOWER CASING & DRIVE 3.....60
LOWER CASING & DRIVE 4.....64
OPTIONAL PARTS.....66
REPAIR KIT 1.....67
REPAIR KIT 2.....68

INDEX

NUMERICAL INDEX.....70

TABLE DES MATIERES

PIECES MAINTENANCE PERIODIQUE.....1
CAPOT SUPERIEUR..... 2
CYLINDRE & CARTER 1..... 3
VILEBREQUIN & PISTON.....5
CYLINDRE & CARTER 2..... 6
CYLINDRE & CARTER 3..... 8
CYLINDRE & CARTER 4..... 9
SOUPAPE..... 10
ADMISSION 1.....13
ADMISSION 2.....15
ADMISSION 3.....16
CARTER D'ACCELERATEUR 1.....18
CARTER D'ACCELERATEUR 2.....19
POMPE A INJECTEUR 1..... 20
POMPE A INJECTEUR 2..... 22
CARBURANT 1..... 23
CARBURANT 2..... 25
GENERATRICE.....26
PARTIE ELECTRIQUE 1.....27
PARTIE ELECTRIQUE 2.....28
PARTIE ELECTRIQUE 3.....30
PARTIE ELECTRIQUE 4.....31
PARTIE ELECTRIQUE 5.....33
DEMARREUR ELECTRIQUE.....35
CAPOT INFERIEUR 1.....36
CAPOT INFERIEUR 2.....38
CAPOT INFERIEUR 3.....40
COMMANDE..... 41
SUPPORT 1..... 42
SUPPORT 2..... 44
PUISSANCE PARER ET INCLINER 1..... 46
PUISSANCE PARER ET INCLINER 2..... 49
FOURREAU.....50
VENTILATEUR D'HUILE..... 53
BOITIER D'HELICE TRANSMISSION1.....54
BOITIER D'HELICE TRANSMISSION2.....58
BOITIER D'HELICE TRANSMISSION3.....60
BOITIER D'HELICE TRANSMISSION4.....64
PIECES OPTIONNELLES.....66
KITS DE REPARATION 1..... 67
KITS DE REPARATION 2..... 68

INDEX

INDEX NUMERIQUE.....70

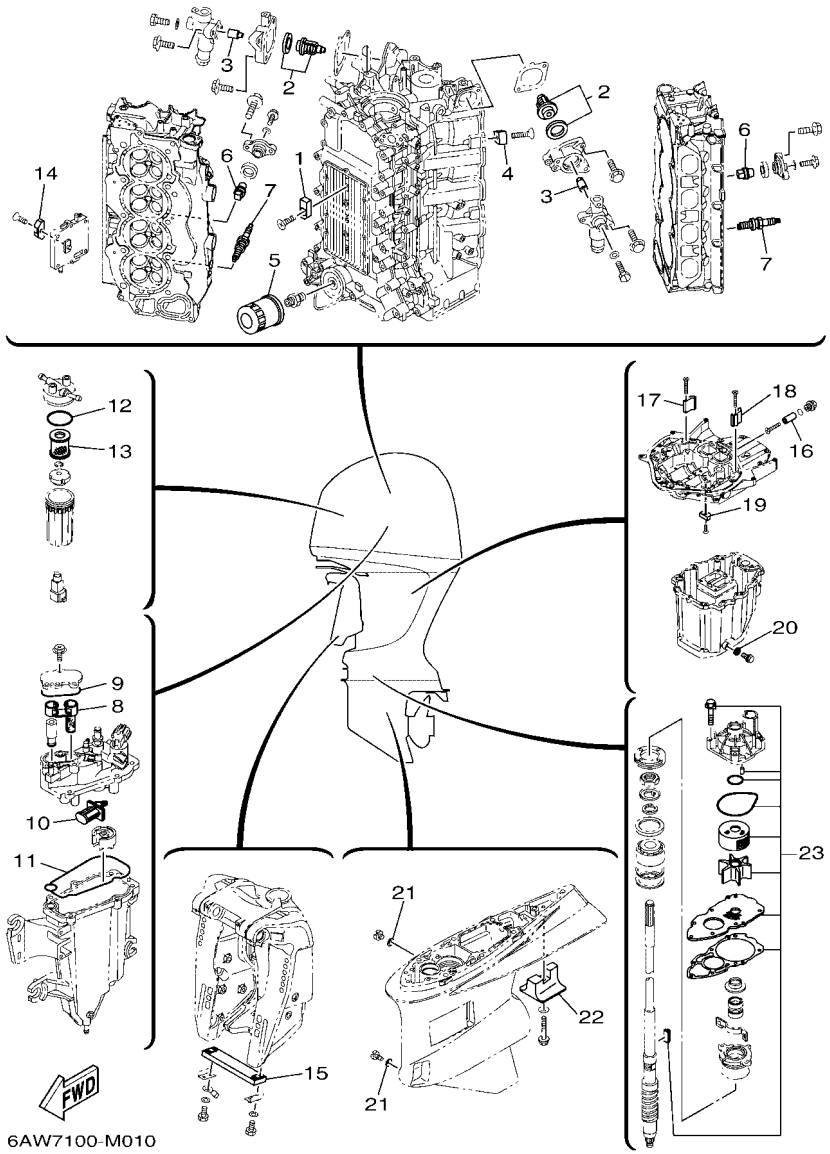

FIG. 1 SCHEDULED SERVICE PARTS — PIECES MAINTENANCE PERIODIQUE

REF. NO.	PART NO. N° PIECES	DESCRIPTION DESCRIPTION	6AWD	6AXD				REMARKS REMARQUES
1	63P–11325–01	ANODE ANODE	3	3				
2	6AW–12411–00	THERMOSTAT THERMOSTAT	2	2				
3	6AW–1132R–00	ANODE 6 ANODE 6	2	2				
4	6AW–1132P–00	ANODE 5 ANODE 5	8	8				
5	N26–13440–02	ELEMENT ASSY, OIL CLEANER ELEMENT, FILTRE A HUILE	1	1				
6	67F–11325–01	ANODE ANODE	10	10				
7	94702–00400	PLUG, SPARK (NGK LFR6A-11) BOUGIE D'ALLUMAGE(NGK LFR6A-11	8	8				
8	6CB–24501–01	FILTER, FUEL FILTRE	1	1				
9	6CB–13016–00	O-RING JOINT TORIQUE	1	1				
10	63P–13915–00	FILTER FILTRE	1	1				
11	6CB–14984–00	GASKET, FLOAT CHAMBER JOINT, CUVE DE FLOTTEUR	1	1				
12	6P3–24564–00	GASKET JOINT	1	1				
13	6P3–24563–01	ELEMENT, FILTER ELEMENT, FILTRE	1	1				
14	6E5–11325–00	ANODE ANODE	1	1				
15	6AW–45251–00	ANODE ANODE	1	1				
16	6AW–1132S–00	ANODE 7 ANODE 7	1	1				
17	6AW–1132T–00	ANODE 8 ANODE 8	1	1				
18	6AW–1132U–00	ANODE 9 ANODE 9	1	1				
19	63P–11325–11	ANODE ANODE	1	1				
20	90430–14M09	GASKET JOINT	1	1				
21	90430–08003	GASKET JOINT	2	2				
22	6AW–45373–00	ANODE ANODE	1	1				
23	6AW–W0078–00	WATER PUMP REPAIR KIT KIT DE REPARATION DE LA POMPE	1	1				

FIG. 2 TOP COWLING — CAPOT SUPERIEUR

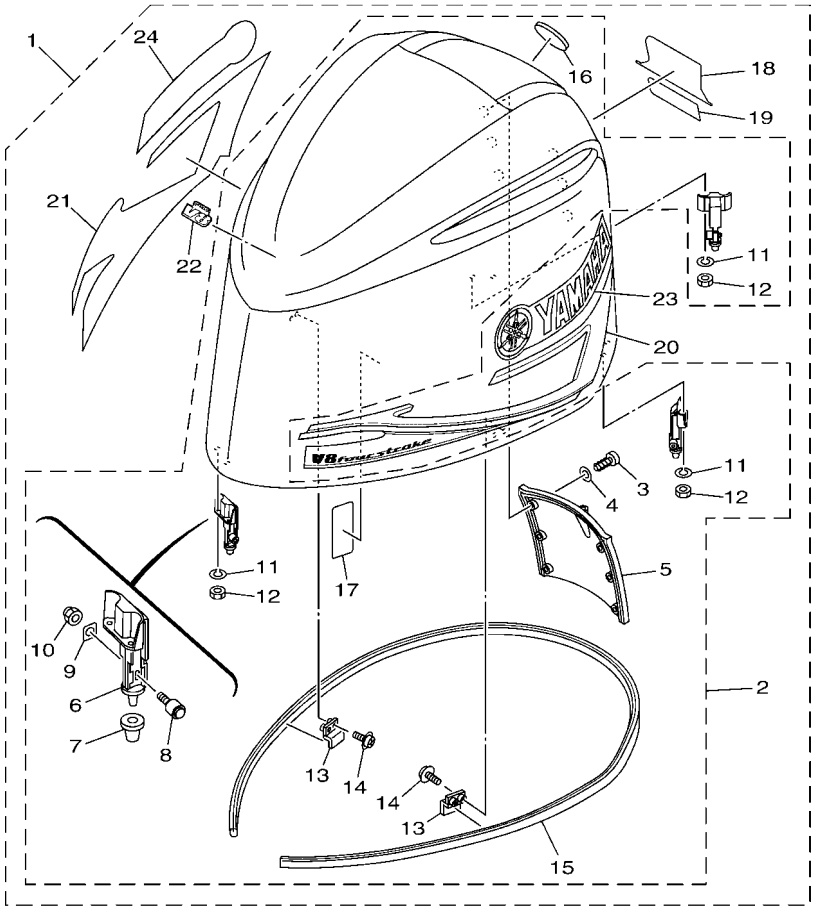

6AWB300-R020

REF. NO.	PART NO. N° PIECES	DESCRIPTION DESCRIPTION	6AWD	6AXD				REMARKS REMARQUES
1	6AW–42610–30	TOP COWLING ASSY CAPOT (ENS.)	1	1				
2	6AW–4261A–00	.TOP COWLING W/O GRAPHICS .CAPOT SUPERIEUR SANS GRAPHIQUE	1	1				
3	97780–60516	..SCREW, TAPPING ..VIS, TETE BOMBEE	6	6				
4	92995–06200	..WASHER ..RONDELLE	6	6				
5	6AW–42532–00	..COVER ..COUVERCLE	1	1				
6	6AW–42647–00–9S	..HOLDER, CLAMP BAND ..SUPPORT, SANDOW DE SERRAGE	3	3				
7	6AW–42663–00	..DAMPER 2 ..AMORTISSEUR 2	3	3				
8	6AW–4264A–00	..HOOK ASSY ..CROCHET (ENS.)	3	3				
9	6AW–42646–10	..PLATE, CLAMP ..PLAQUE, PRESSE	3	3				
10	95780–08300	..NUT, FLANGE ..ECROU	3	3				
11	92990–06100	..WASHER, SPRING ..RONDELLE, GROWER	6	6				
12	95380–06600	..NUT, HEXAGON ..ECROU	6	6				
13	6AW–42477–00	..PLATE, LOCK ..PLAQUE BUTEE	2	2				
14	97985–05210	..SCREW, WITH WASHER ..VIS, AVEC RONDELLE	4	4				
15	6AW–42628–20	..SEAL ..JOINT	1	1				
16	6AW–42697–10	..TUNING FORK MARK ..MARQUE, YAMAHA	1	1				
17	6AH–42735–00	..PROTECTOR ..PROTECTEUR	1	1				
18	6AW–42678–10	.GRAPHIC, REAR .ADHESIF, ARRIERE	1	1				
19	6AW–4267A–00	.GRAPHIC, REAR 2 .ADHESIF, ARRIERE 2	1	1				
20	6AW–42675–10	.GRAPHIC, SIDE 1 .EMBLEME	1	1				
21	6AW–42676–10	.GRAPHIC, SIDE 2 .EMBLEME	1	1				
22	6AW–42677–10	.GRAPHIC, FRONT .ADHESIF, AVANT	1	1				
23	6AW–42681–10	.MARK, COWLING .ADHESIF, CAPOT	1	1				
24	6AW–42682–10	.MARK, COWLING .ADHESIF, CAPOT	1	1				

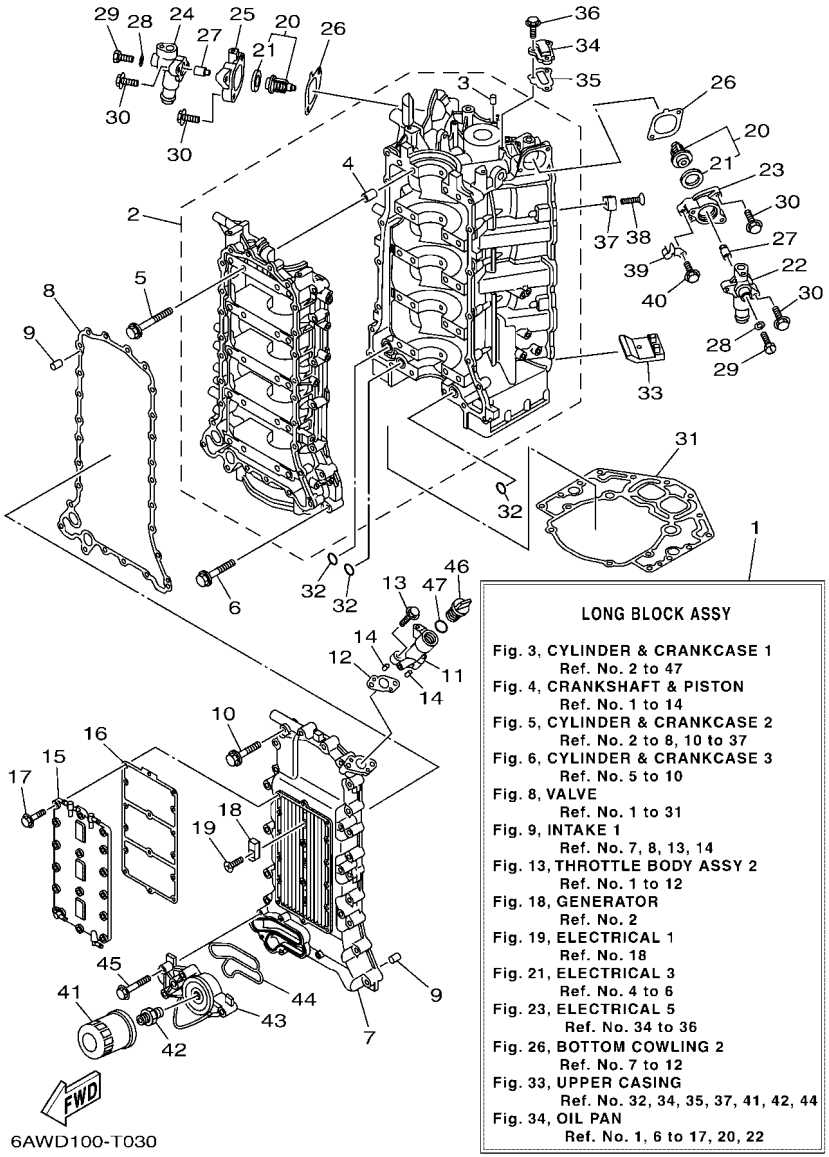

FIG. 3 CYLINDER & CRANKCASE 1 — CYLINDRE & CARTER 1

REF. NO.	PART NO. N° PIECES	DESCRIPTION DESCRIPTION	6AWD	6AXD				REMARKS REMARQUES
1	6AW–11000–01	LONG BLOCK ASSY SOUS-ASSEMBLEE DU MOTEUR	1	1				
2	6AW–15100–04	CRANKCASE ASSY CARTER DE MOTEUR COMPLET	1	1				
3	93606–12019	.PIN, DOWEL .GOUPILLE	3	3				
4	91814–18002	.PIN, DOWEL .GOUJON, D'ASSEMBLAGE	10	10				
5	6P2–15187–00	BOLT BOULON	20	20				
6	90105–08175	BOLT, FLANGE BOULON, A COLLERETTE	18	18				
7	6AW–15411–02–9S	COVER, CRANKCASE 1 COUVERCLE 1, CARTER MOTEUR	1	1				
8	6AW–15451–00	GASKET, CRANKCASE COVER 1 JOINT, COUVERCLE DE CARTER 1	1	1				
9	93606–12019	PIN, DOWEL GOUPILLE	2	2				
10	90105–08175	BOLT, FLANGE BOULON, A COLLERETTE	26	26				
11	6AW–15319–00–9S	JOINT JOINT	1	1				
12	6AW–15364–00	GASKET, OIL PLUG JOINT, PLOT D'HUILE	1	1				
13	90105–06155	BOLT, FLANGE BOULON, A COLLERETTE	2	2				
14	93604–08062	PIN, DOWEL CLAVETTE	2	2				
15	6AW–15421–00–9S	COVER, CRANKCASE 2 COUVERCLE 2, CARTER MOTEUR	1	1				
16	6AW–15461–00	GASKET, CRANKCASE COVER 2 JOINT, COUVERCLE DE CARTER 2	1	1				
17	90105–06037	BOLT, FLANGE BOULON, A COLLERETTE	16	16				
18	63P–11325–01	ANODE ANODE	3	3				
19	90151–06M02	SCREW, COUNTERSUNK VIS, TETE NOYEE	3	3				
20	6AW–12411–00	THERMOSTAT THERMOSTAT	2	2				
21	6AW–12412–00	.SEAL, THERMOSTAT .JOINT, THERMOSTAT	1	1				
22	6AW–12413–00–9S	COVER, THERMOSTAT COUVERCLE, THERMOSTAT	1	1				
23	6AW–12422–00–9S	COVER, HOUSING COUVERCLE DE CARTER DE POMPE	1	1				
24	6AW–1241B–00–9S	COVER, THERMOSTAT 2 COUVERCLE, THERMOSTAT 2	1	1				
25	6AW–1242B–00–9S	COVER, HOUSING 2 COUVERCLE DE CARTER DE POMPE 2	1	1				
26	6AW–12427–00	GASKET, HOUSING COVER 1 JOINT, COUVERCLE DE CARTER 1	2	2				
27	6AW–1132R–00	ANODE 6 ANODE 6	2	2				

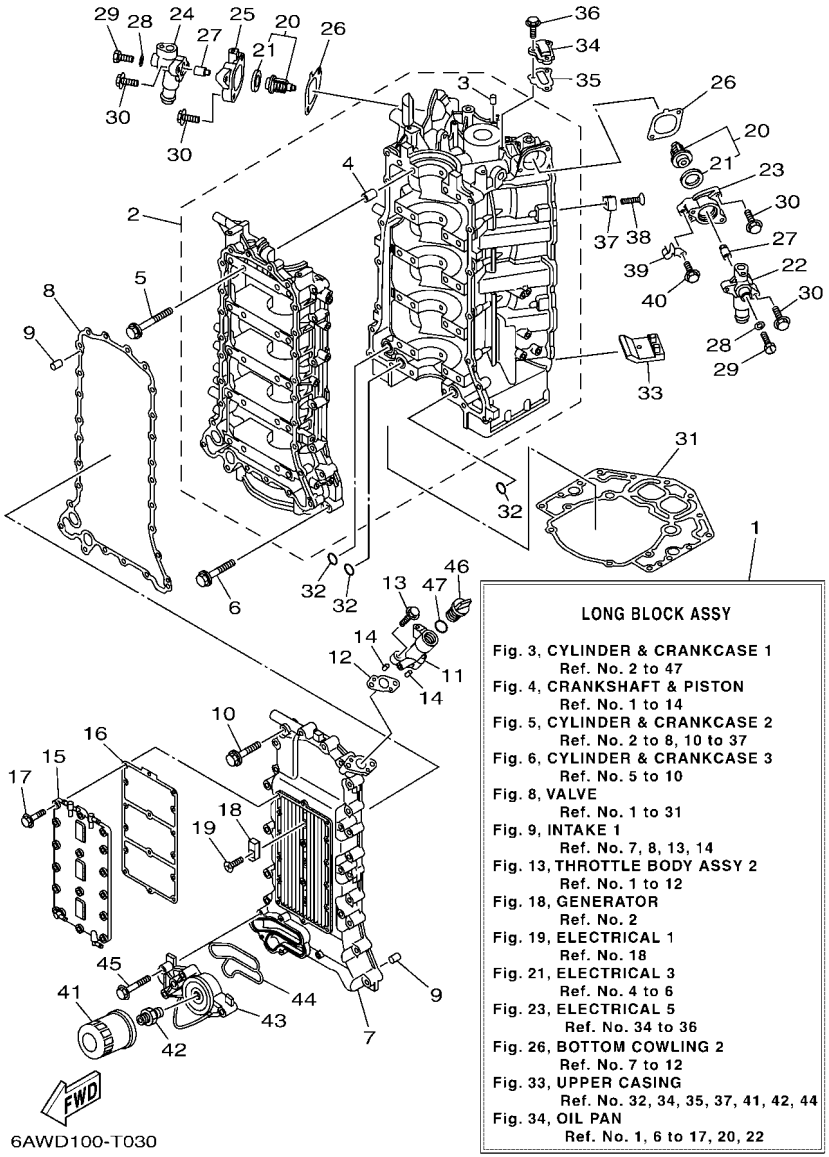

LONG BLOCK ASSY

Fig. 3, CYLINDER & CRANKCASE 1
Ref. No. 2 to 47
Fig. 4, CRANKSHAFT & PISTON
Ref. No. 1 to 14
Fig. 5, CYLINDER & CRANKCASE 2
Ref. No. 2 to 8, 10 to 37
Fig. 6, CYLINDER & CRANKCASE 3
Ref. No. 5 to 10
Fig. 8, VALVE
Ref. No. 1 to 31
Fig. 9, INTAKE 1
Ref. No. 7, 8, 13, 14
Fig. 13, THROTTLE BODY ASSY 2
Ref. No. 1 to 12
Fig. 18, GENERATOR
Ref. No. 2
Fig. 19, ELECTRICAL 1
Ref. No. 18
Fig. 21, ELECTRICAL 3
Ref. No. 4 to 6
Fig. 23, ELECTRICAL 5
Ref. No. 34 to 36
Fig. 26, BOTTOM COWLING 2
Ref. No. 7 to 12
Fig. 33, UPPER CASING
Ref. No. 32, 34, 35, 37, 41, 42, 44
Fig. 34, OIL PAN
Ref. No. 1, 6 to 17, 20, 22

FIG. 3 CYLINDER & CRANKCASE 1 — CYLINDRE & CARTER 1

REF. NO.	PART NO. N° PIECES	DESCRIPTION DESCRIPTION	6AWD	6AXD				REMARKS REMARQUES
28	90430–05002	GASKET JOINT	2	2				
29	90105–05012	BOLT, FLANGE BOULON, A COLLERETTE	2	2				
30	90105–06028	BOLT, FLANGE BOULON, A COLLERETTE	8	8				
31	6AW–11351–00	GASKET, CYLINDER JOINT, D'EMBASE	1	1				
32	93210–26658	O-RING JOINT TORIQUE	3	3				
33	6AW–14664–00	GROMMET, WATER SHUT PASSE-FIL	2	2				
34	6AW–1131M–00–9S	COVER COUVERCLE	1	1				
35	6AW–11381–00	GASKET 1 JOINT 1	1	1				
36	90105–06039	BOLT, FLANGE BOULON, A COLLERETTE	3	3				
37	6AW–1132P–00	ANODE 5 ANODE 5	8	8				
38	98780–06530	SCREW, FLAT HEAD VIS A TETE FRAISEE	8	8				
39	90462–12008	CLAMP BRIDE	1	1				
40	95D95–06012	BOLT, FLANGE DEEP RECESS BOULON FIXATION	1	1				
41	N26–13440–02	ELEMENT ASSY, OIL CLEANER ELEMENT, FILTRE A HUILE	1	1				
42	90401–19001	BOLT, UNION BOULON, RACCORD	1	1				
43	6AW–13446–00–9S	CONNECTOR CONNECTEUR	1	1				
44	6AW–13477–00	GASKET JOINT	1	1				
45	95D95–06045	BOLT, FLANGE DEEP RECESS BOULON FIXATION	5	5				
46	6G8–15363–00	PLUG, OIL PLOT, HUILE	1	1				
47	93210–24M79	O-RING JOINT TORIQUE	1	1				

FIG. 4 CRANKSHAFT & PISTON — VILEBREQUIN & PISTON

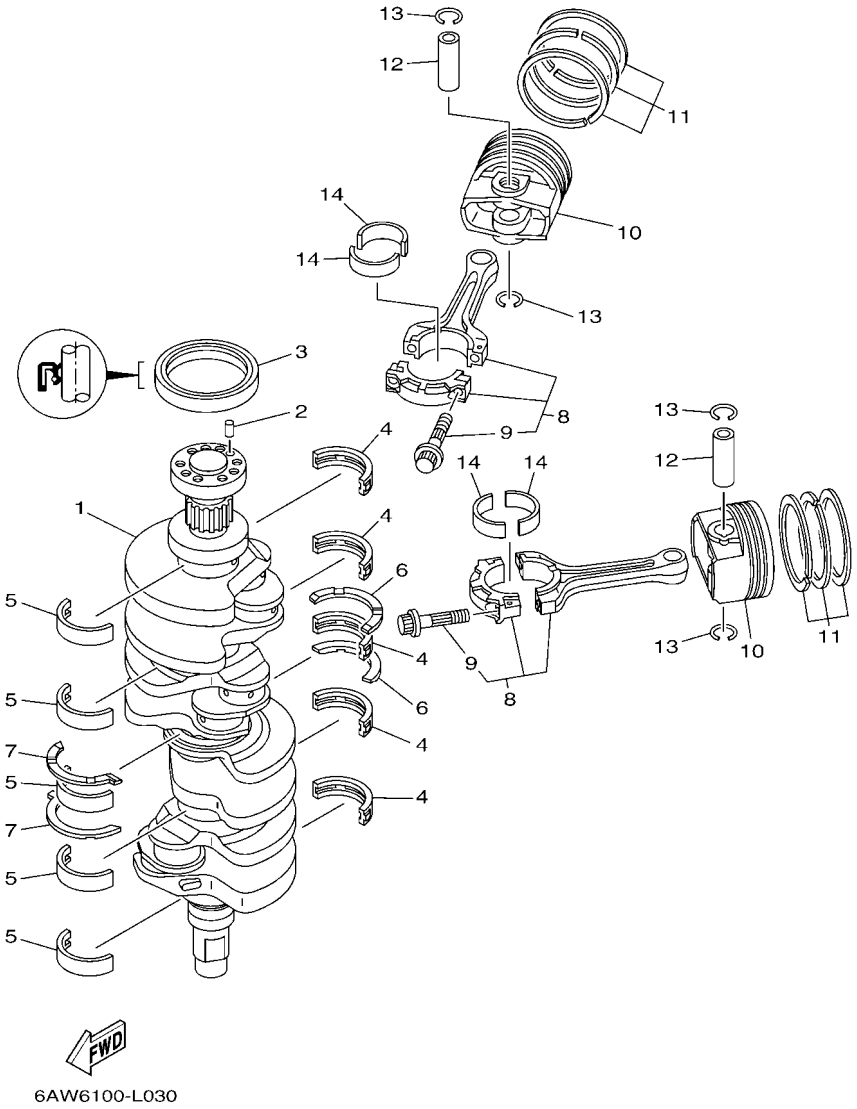

REF. NO.	PART NO. N° PIECES	DESCRIPTION DESCRIPTION	6AWD	6AXD				REMARKS REMARQUES
1	6AW–11411–10	CRANKSHAFT VILEBREQUIN COMPLET	1	1				
2	93606–12019	PIN, DOWEL GOUPILLE	1	1				
3	93102–85004	OIL SEAL JOINT SPY	1	1				
4	6AW–11416–00	PLANE BEARING, CRANKSHAFT 1 COUSSINET DE VILEBREQUIN 1	5	5				UR YELLOW UR YELLOW
	6AW–11416–10	PLANE BEARING, CRANKSHAFT 1 COUSSINET DE VILEBREQUIN 1	5	5				UR GREEN UR GREEN
	6AW–11416–20	PLANE BEARING, CRANKSHAFT 1 COUSSINET DE VILEBREQUIN 1	5	5				UR BROWN UR BROWN
	6AW–11416–30	PLANE BEARING, CRANKSHAFT 1 COUSSINET DE VILEBREQUIN 1	5	5				UR BLACK UR BLACK
	6AW–11416–40	PLANE BEARING, CRANKSHAFT 1 COUSSINET DE VILEBREQUIN 1	5	5				UR BLUE UR BLUE
5	6AW–11417–00	PLANE BEARING, CRANKSHAFT 2 COUSSINET DE VILEBREQUIN 2	5	5				UR YELLOW UR YELLOW
	6AW–11417–10	PLANE BEARING, CRANKSHAFT 2 COUSSINET DE VILEBREQUIN 2	5	5				UR GREEN UR GREEN
	6AW–11417–20	PLANE BEARING, CRANKSHAFT 2 COUSSINET DE VILEBREQUIN 2	5	5				UR BROWN UR BROWN
	6AW–11417–30	PLANE BEARING, CRANKSHAFT 2 COUSSINET DE VILEBREQUIN 2	5	5				UR BLACK UR BLACK
	6AW–11417–40	PLANE BEARING, CRANKSHAFT 2 COUSSINET DE VILEBREQUIN 2	5	5				UR BLUE UR BLUE
6	6AW–11426–01	BEARING, THRUST 1 ROULEMENT DE BUTEE 1	2	2				
7	6AW–11427–01	BEARING, THRUST 2 ROULEMENT DE BUTEE 2	2	2				
8	6AW–W1165–00	CONNECTING ROD ASSY BIELLE COMPLETTE	8	8				
9	63P–11654–10	.BOLT, CONNECTING ROD .BOULON, BIELLE	2	2				
10	6AW–11631–10–93	PISTON (STD) PISTON (STD)	8	8				
11	6AW–11603–00	PISTON RING SET (STD) JEU DE SEGMENTS (STD)	8	8				
12	63P–11633–10	PIN, PISTON AXE, PISTON	8	8				
13	63P–11634–00	CLIP, PISTON PIN AGRAFE, AXE DE PISTON	16	16				
14	6AW–11656–00	PLANE BEARING, CONNECTING ROD ROULEMENT DE BIELLE	16	16				UR GREEN UR GREEN
	6AW–11656–10	PLANE BEARING, CONNECTING ROD ROULEMENT DE BIELLE	16	16				UR BLUE UR BLUE
	6AW–11656–20	PLANE BEARING, CONNECTING ROD ROULEMENT DE BIELLE	16	16				UR RED UR RED
	6AW–11656–30	PLANE BEARING, CONNECTING ROD ROULEMENT DE BIELLE	16	16				UR PURPLE UR PURPLE

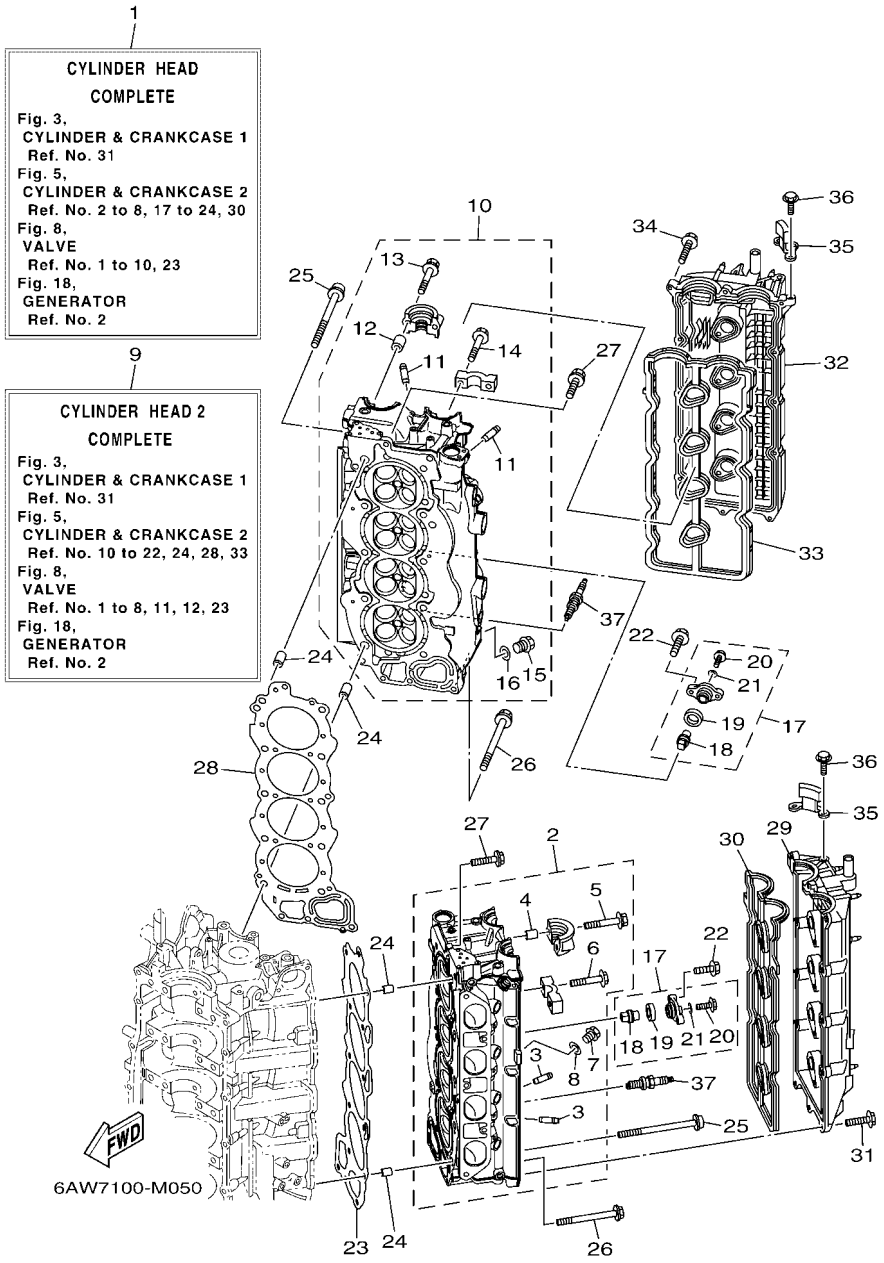

FIG. 5 CYLINDER & CRANKCASE 2 — CYLINDRE & CARTER 2

REF. NO.	PART NO. N° PIECES	DESCRIPTION DESCRIPTION	6AWD	6AXD				REMARKS REMARQUES
1	6AW–W009A–02–9S	CYLINDER HEAD COMPLETE CULASSE (ENS.)	1	1				
2	6AW–11110–10	CYLINDER HEAD ASSY JEU DE CULASSE	1	1				
3	6S5–11133–10	.GUIDE, VALVE 1 .GUIDE, SOUPAPE 1	16	16				
4	91809–08006	.PIN, DOWEL .GOUJON, D'ASSEMBLAGE	4	4				
5	90119–07001	.BOLT, WITH WASHER .BOULON, AVEC RONDELLE	4	4				
6	90119–07234	.BOLT, WITH WASHER .BOULON, AVEC RONDELLE	16	16				
7	90340–18M09	.PLUG, STRAIGHT SCREW .PLOT, FILETE DROIT	1	1				
8	90201–186F1	.WASHER, PLATE .RONDELLE, PLATE	1	1				
9	6AW–W009C–02–9S	CYLINDER HEAD 2 COMPLETE CULASSE 2	1	1				
10	6AW–11120–10	CYLINDER HEAD ASSY 2 CULASSE 2	1	1				
11	6S5–11133–10	.GUIDE, VALVE 1 .GUIDE, SOUPAPE 1	16	16				
12	91809–08006	.PIN, DOWEL .GOUJON, D'ASSEMBLAGE	4	4				
13	90119–07001	.BOLT, WITH WASHER .BOULON, AVEC RONDELLE	4	4				
14	90119–07234	.BOLT, WITH WASHER .BOULON, AVEC RONDELLE	16	16				
15	90340–18M09	.PLUG, STRAIGHT SCREW .PLOT, FILETE DROIT	1	1				
16	90201–186F1	.WASHER, PLATE .RONDELLE, PLATE	1	1				
17	67F–11301–00	ANODE COVER ASSY COUVERCLE ANODE (ENS.)	10	10				
18	67F–11325–01	.ANODE .ANODE	1	1				
19	67F–11328–00	.GROMMET, ANODE .PASSE-FIL	1	1				
20	90105–06M07	.BOLT, FLANGE .BOULON, A COLLERETTE	1	1				
21	90430–06M03	.GASKET .JOINT	1	1				
22	95D95–08025	BOLT, FLANGE DEEP RECESS BOULON FIXATION	20	20				
23	6AW–11181–00	GASKET, CYLINDER HEAD 1 JOINT, DE CULASSE 1	1	1				
24	90387–11005	COLLAR COLLERETTE	4	4				
25	90149–11001	SCREW VIS	20	20				
26	90105–08220	BOLT, FLANGE BOULON, A COLLERETTE	6	6				
27	90119–08115	BOLT, WITH WASHER BOULON, AVEC RONDELLE	2	2				

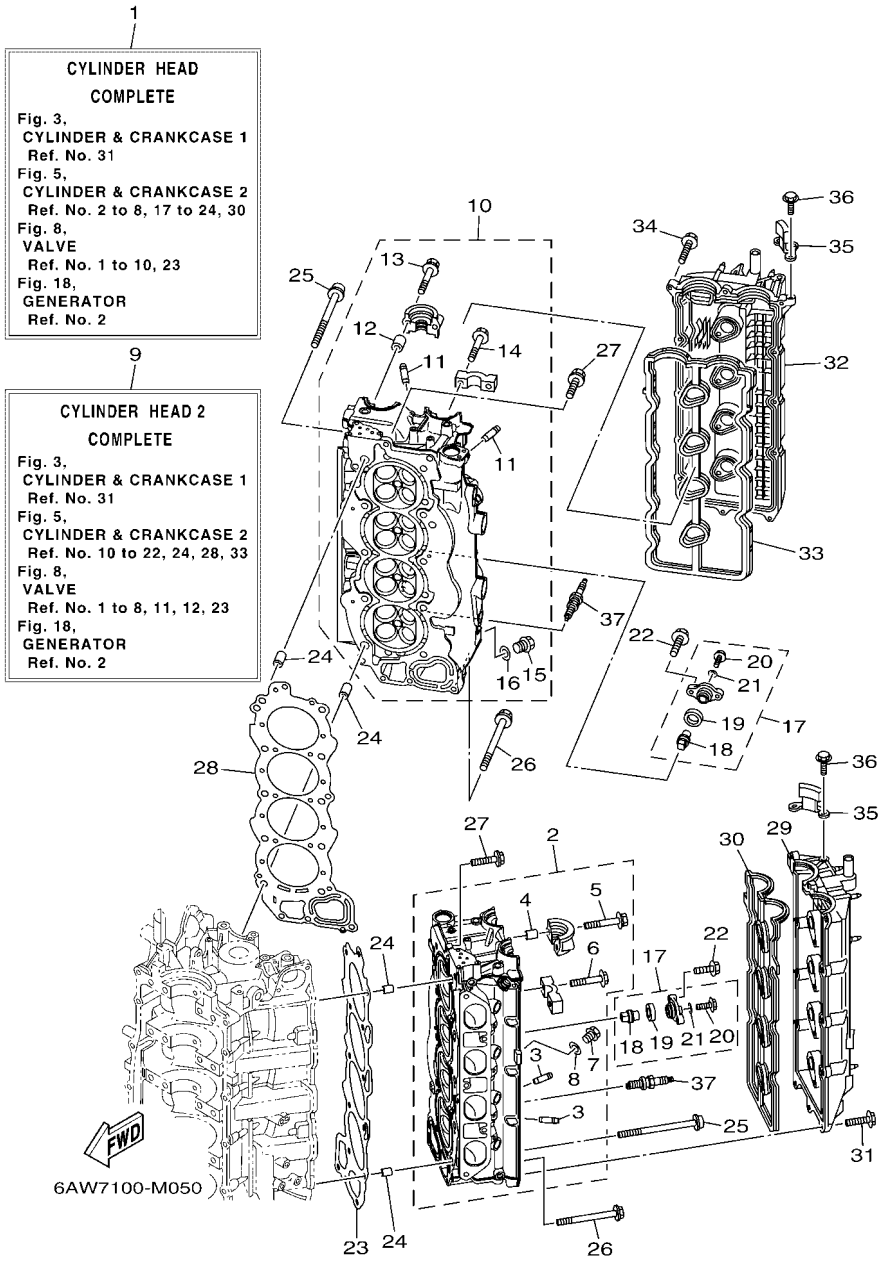

FIG. 5 CYLINDER & CRANKCASE 2 — CYLINDRE & CARTER 2

REF. NO.	PART NO. N° PIECES	DESCRIPTION DESCRIPTION	6AWD	6AXD				REMARKS REMARQUES
28	6AW–11182–00	GASKET, CYLINDER HEAD 2 JOINT, CULASSE 2	1	1				
29	6AW–11191–10	COVER, CYLINDER HEAD 1 COUVERCLE, CULASSE 1	1	1				
30	6AW–11193–10	GASKET, HEAD COVER 1 JOINT, COUVERCLE DE CULASSE 1	1	1				
31	95D95–06030	BOLT, FLANGE DEEP RECESS BOULON FIXATION	16	16				
32	6AW–11192–10	COVER, CYLINDER HEAD 2 COUVERCLE, CULASSE 2	1	1				
33	6AW–11194–10	GASKET, HEAD COVER 2 JOINT, COUVERCLE DE CULASSE 2	1	1				
34	95D95–06030	BOLT, FLANGE DEEP RECESS BOULON FIXATION	16	16				
35	6AW–15142–00	GUIDE 1 GUIDE 1	2	2				
36	95D95–06014	BOLT, FLANGE DEEP RECESS BOULON FIXATION	4	4				
37	94702–00400	PLUG, SPARK (NGK LFR6A-11) BOUGIE D'ALLUMAGE(NGK LFR6A-11	8	8				

FIG. 6 CYLINDER & CRANKCASE 3 — CYLINDRE & CARTER 3

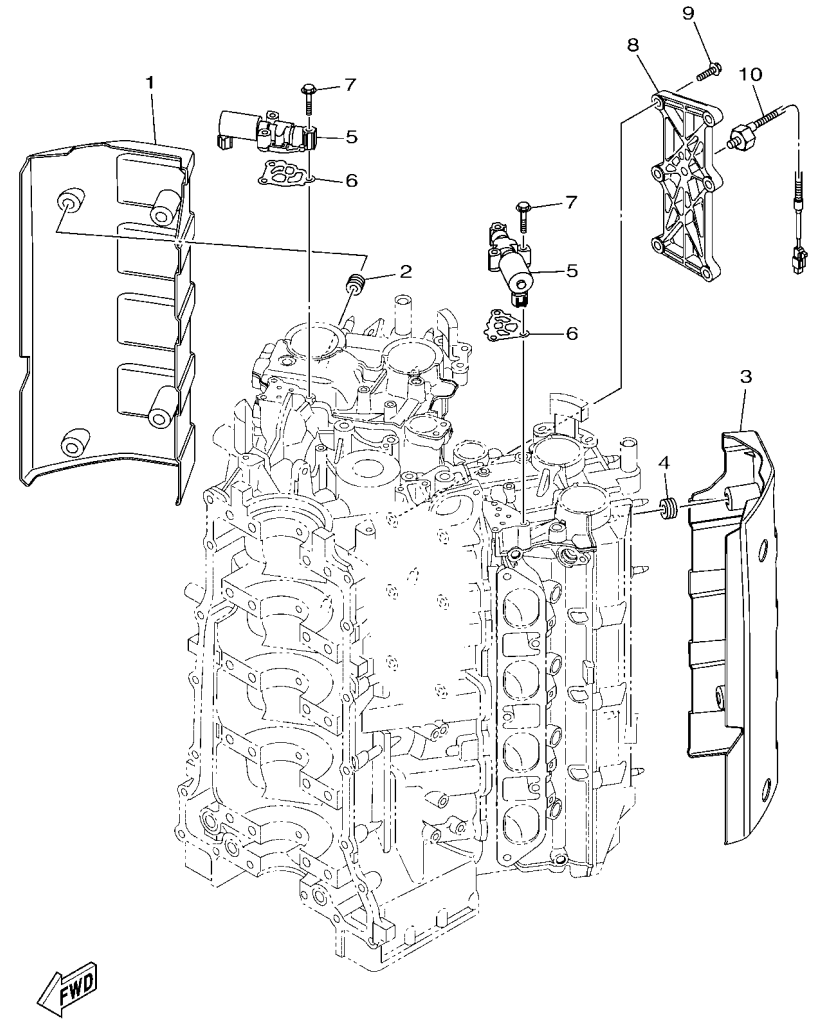

6AW6100-L050

REF. NO.	PART NO. N° PIECES	DESCRIPTION DESCRIPTION	6AWD	6AXD				REMARKS REMARQUES
1	6AW–11186–10	COVER, CYLINDER HEAD SIDE 2 COUVERCLE LATERAL DE CULASSE 2	1	1				
2	90480–12314	GROMMET PASSE-FIL	4	4				
3	6AW–11187–10	COVER, CYLINDER HEAD SIDE 3 COUVERCLE LATERAL DE CULASSE 3	1	1				
4	90480–12314	GROMMET PASSE-FIL	4	4				
5	6CB–86120–00	SOLENOID VALVE ASSY SOLENOIDE	2	2				
6	6CB–1242F–00	GASKET, FILTER JOINT, FILTRE	2	2				
7	90105–06035	BOLT, FLANGE BOULON, A COLLERETTE	6	6				
8	6AW–1135A–00	BRACKET SUPPORT	1	1				
9	90105–08240	BOLT, FLANGE BOULON, A COLLERETTE	6	6				
10	6P2–85780–00	SENSOR, KNOCK SONDE DE COGNEMENT	1	1				

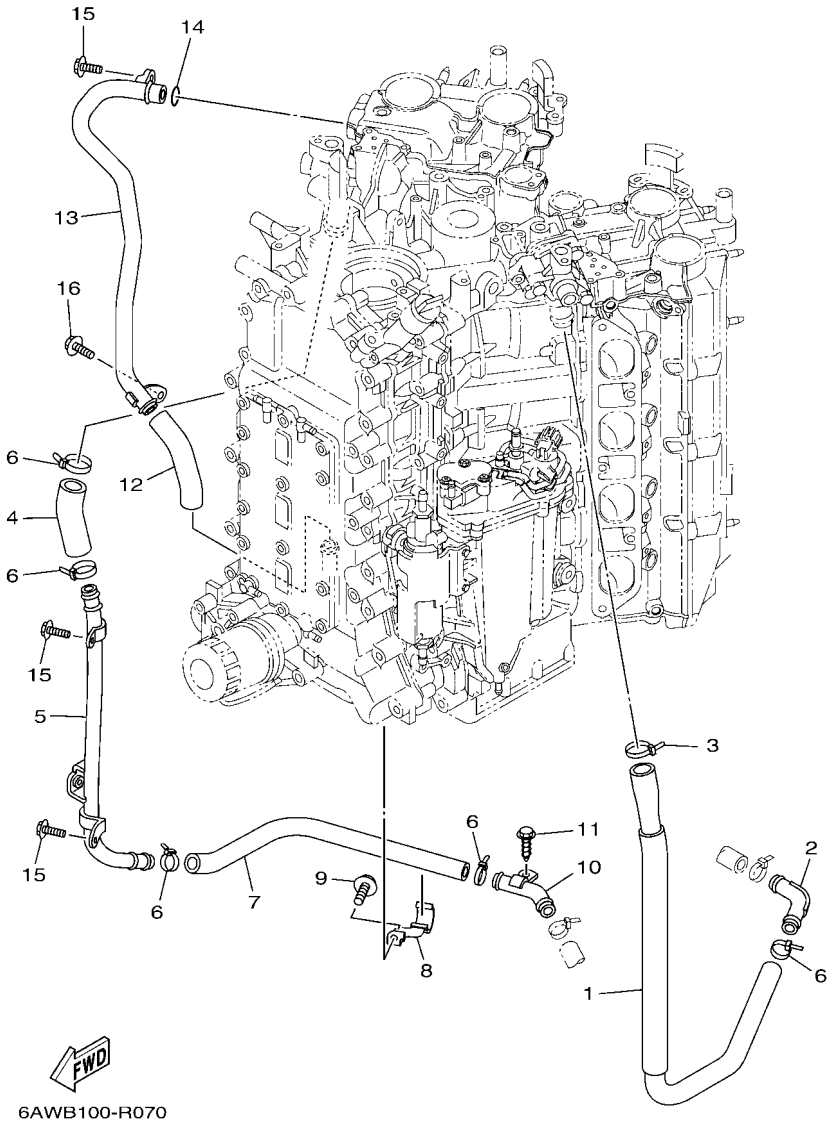

FIG. 7 CYLINDER & CRANKCASE 4 — CYLINDRE & CARTER 4

REF. NO.	PART NO. N° PIECES	DESCRIPTION DESCRIPTION	6AWD	6AXD				REMARKS REMARQUES
1	6AW–1243A–00	HOSE 1 DURITE 1	1	1				
2	6AW–12477–00	PIPE 7 DURITE 7	1	1				
3	90465–11M59	CLAMP BRIDE	1	1				
4	6AW–1243E–00	HOSE 2 DURITE 2	1	1				
5	6AW–12484–00	PIPE 4 DURITE 4	1	1				
6	90465–11M59	CLAMP BRIDE	5	5				
7	6AW–1244G–00	HOSE, 4 DURITE 4	1	1				
8	6AW–12491–10	CLAMP 1 COLLIER 1	1	1				
9	97E95–06514	BOLT, HEXAGON W/W DEEP RECESS VIS HEXAGONAL AVC RONDELLE	1	1				
10	6AW–12476–00	PIPE 6 DURITE 6	1	1				
11	90109–06M86	BOLT BOULON	1	1				
12	6AW–1244J–00	HOSE 6 DURITE 6	1	1				
13	6AW–11378–00	HOSE 2 2 DURITE	1	1				
14	93210–207A0	O-RING JOINT TORIQUE	1	1				
15	95D95–06014	BOLT, FLANGE DEEP RECESS BOULON FIXATION	3	3				
16	95D95–06010	BOLT, FLANGE DEEP RECESS BOULON FIXATION	1	1				

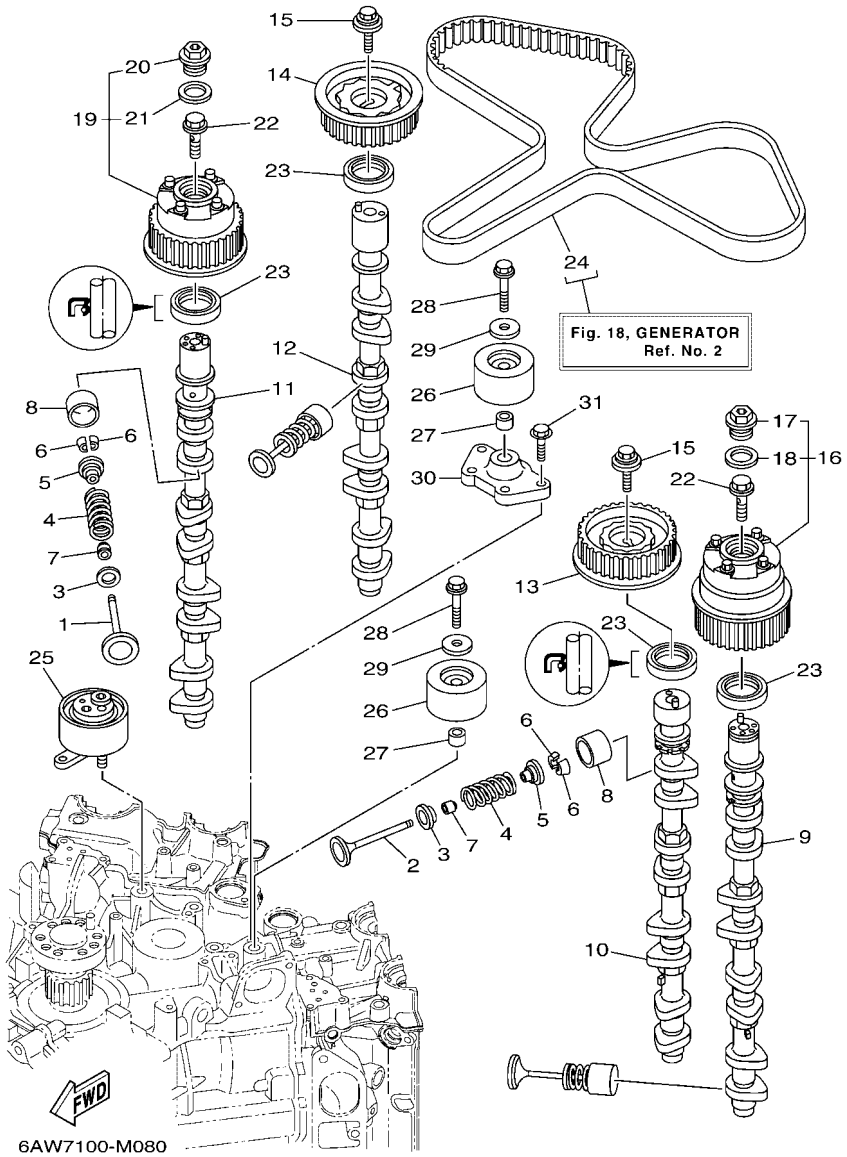

FIG. 8 VALVE — SOUPAPE

REF. NO.	PART NO. N° PIECES	DESCRIPTION DESCRIPTION	6AWD	6AXD				REMARKS REMARQUES
1	6CB–12111–00	VALVE, INTAKE SOUPAPE, ADMISSION	16	16				
2	6CB–12121–00	VALVE, EXHAUST SOUPAPE, ECHAPPEMENT	16	16				
3	K0F–A3743–00	SEAT, VALVE SPRING SIEGE, RESSORT DE SOUPAPE	32	32				
4	6CB–12113–00	SPRING, VALVE INNER RESSORT DE SOUPAPE, INTERNE	32	32				
5	K0F–A3741–00	RETAINER, VALVE SPRING BUTEE DE RESSORT DE SOUPAPA	32	32				
6	K0F–A3742–00	LOCK, VALVE SPRING RETAINER FRAISE, SOUPAPE	64	64				
7	51Y–12119–00	SEAL, VALVE STEM JOINT, QUEUE DE SOUPAPE	32	32				
8	K0F–A3751–00	LIFTER, VALVE (3.000) LEVE-SOUPAPE (3.000)	32	32				UR UR
	K0F–A3751–10	LIFTER, VALVE (3.025) LEVE-SOUPAPE (3.025)	32	32				UR UR
	K0F–A3751–20	LIFTER, VALVE (3.050) LEVE-SOUPAPE (3.050)	32	32				UR UR
	K0F–A3751–30	LIFTER, VALVE (3.075) LEVE-SOUPAPE (3.075)	32	32				UR UR
	K0F–A3751–40	LIFTER, VALVE (3.100) LEVE-SOUPAPE (3.100)	32	32				UR UR
	K0F–A3751–50	LIFTER, VALVE (3.122) LEVE-SOUPAPE (3.122)	32	32				UR UR
	K0F–A3751–60	LIFTER, VALVE (3.142) LEVE-SOUPAPE (3.142)	32	32				UR UR
	K0F–A3751–70	LIFTER, VALVE (3.162) LEVE-SOUPAPE (3.162)	32	32				UR UR
	K0F–A3751–80	LIFTER, VALVE (3.182) LEVE-SOUPAPE (3.182)	32	32				UR UR
	K0F–A3751–90	LIFTER, VALVE (3.202) LEVE-SOUPAPE (3.202)	32	32				UR UR
	K0F–A3751–A0	LIFTER, VALVE (3.222) LEVE-SOUPAPE (3.222)	32	32				UR UR
	K0F–A3751–B0	LIFTER, VALVE (3.242) LEVE-SOUPAPE (3.242)	32	32				UR UR
	K0F–A3751–C0	LIFTER, VALVE (3.262) LEVE-SOUPAPE (3.262)	32	32				UR UR
	K0F–A3751–D0	LIFTER, VALVE (3.282) LEVE-SOUPAPE (3.282)	32	32				UR UR
	K0F–A3751–E0	LIFTER, VALVE (3.302) LEVE-SOUPAPE (3.302)	32	32				UR UR
	K0F–A3751–F0	LIFTER, VALVE (3.322) LEVE-SOUPAPE (3.322)	32	32				UR UR
	K0F–A3751–G0	LIFTER, VALVE (3.342) LEVE-SOUPAPE (3.342)	32	32				UR UR
	K0F–A3751–H0	LIFTER, VALVE (3.362) LEVE-SOUPAPE (3.362)	32	32				UR UR
	K0F–A3751–J0	LIFTER, VALVE (3.382) LEVE-SOUPAPE (3.382)	32	32				UR UR
	K0F–A3751–K0	LIFTER, VALVE (3.402) LEVE-SOUPAPE (3.402)	32	32				UR UR

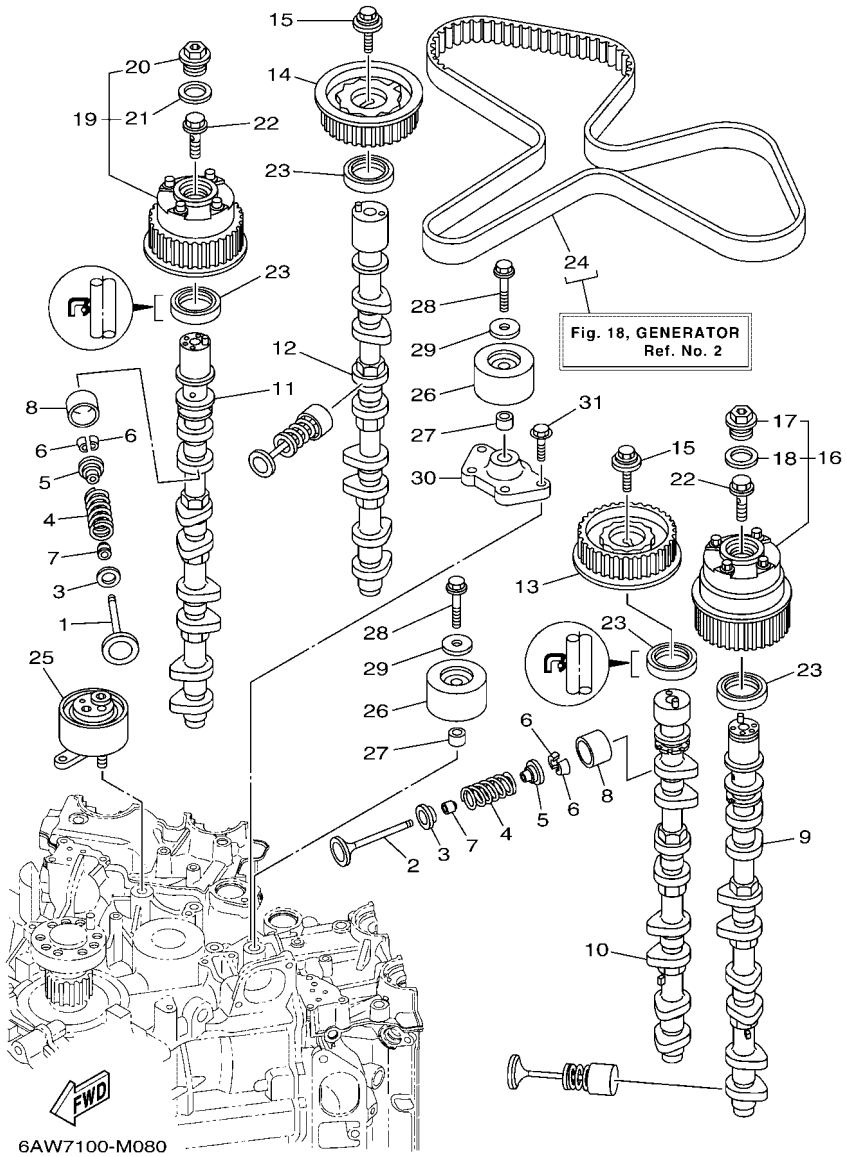

FIG. 8 VALVE SOUPAPE

REF. NO.	PART NO. N° PIECES	DESCRIPTION DESCRIPTION	6AWD	6AXD				REMARKS REMARQUES
8	K0F–A3751–L0	LIFTER, VALVE (3.422) LEVE-SOUPAPE (3.422)	32	32				UR UR
	K0F–A3751–M0	LIFTER, VALVE (3.442) LEVE-SOUPAPE (3.442)	32	32				UR UR
	K0F–A3751–N0	LIFTER, VALVE (3.462) LEVE-SOUPAPE (3.462)	32	32				UR UR
	K0F–A3751–P0	LIFTER, VALVE (3.482) LEVE-SOUPAPE (3.482)	32	32				UR UR
	K0F–A3751–R0	LIFTER, VALVE (3.502) LEVE-SOUPAPE (3.502)	32	32				UR UR
	K0F–A3751–S0	LIFTER, VALVE (3.522) LEVE-SOUPAPE (3.522)	32	32				UR UR
	K0F–A3751–T0	LIFTER, VALVE (3.542) LEVE-SOUPAPE (3.542)	32	32				UR UR
	K0F–A3753–00	LIFTER, VALVE (3.562) LEVE-SOUPAPE (3.562)	32	32				UR UR
	K0F–A3753–10	LIFTER, VALVE (3.582) LEVE-SOUPAPE (3.582)	32	32				UR UR
	K0F–A3753–20	LIFTER, VALVE (3.602) LEVE-SOUPAPE (3.602)	32	32				UR UR
	K0F–A3753–30	LIFTER, VALVE (3.625) LEVE-SOUPAPE (3.625)	32	32				UR UR
	K0F–A3753–40	LIFTER, VALVE (3.650) LEVE-SOUPAPE (3.650)	32	32				UR UR
	K0F–A3753–50	LIFTER, VALVE (3.675) LEVE-SOUPAPE (3.675)	32	32				UR UR
	K0F–A3753–60	LIFTER, VALVE (3.700) LEVE-SOUPAPE (3.700)	32	32				UR UR
	K0F–A3753–70	LIFTER, VALVE (3.725) LEVE-SOUPAPE (3.725)	32	32				UR UR
9	6AW–12171–10	CAMSHAFT 1 ARBRE A CAMES 1	1	1				
10	6AW–12181–10	CAMSHAFT 2 ARBRE A CAMES 2	1	1				
11	6AW–12172–10	CAMSHAFT 3 ARBRE A CAMES 3	1	1				
12	6AW–12182–10	CAMSHAFT 4 ARBRE A CAMES 4	1	1				
13	6AW–11537–00	GEAR, DRIVEN PIGNON SECONDAIRE	1	1				
14	6AW–11567–00	GEAR, DRIVEN 2 PIGNON SECONDAIRE 2	1	1				
15	90119–10050	BOLT, WITH WASHER BOULON, AVEC RONDELLE	2	2				
16	6AW–12645–00	PULLEY ASSY 1 POULIE COMPLET 1	1	1				
17	6P2–12623–00	.BOLT .BOULON	1	1				
18	6P2–12663–00	.GASKET .JOINT	1	1				
19	6AW–1264A–00	PULLEY ASSY 2 POULIE COMPLET 2	1	1				
20	6P2–12623–00	.BOLT .BOULON	1	1				

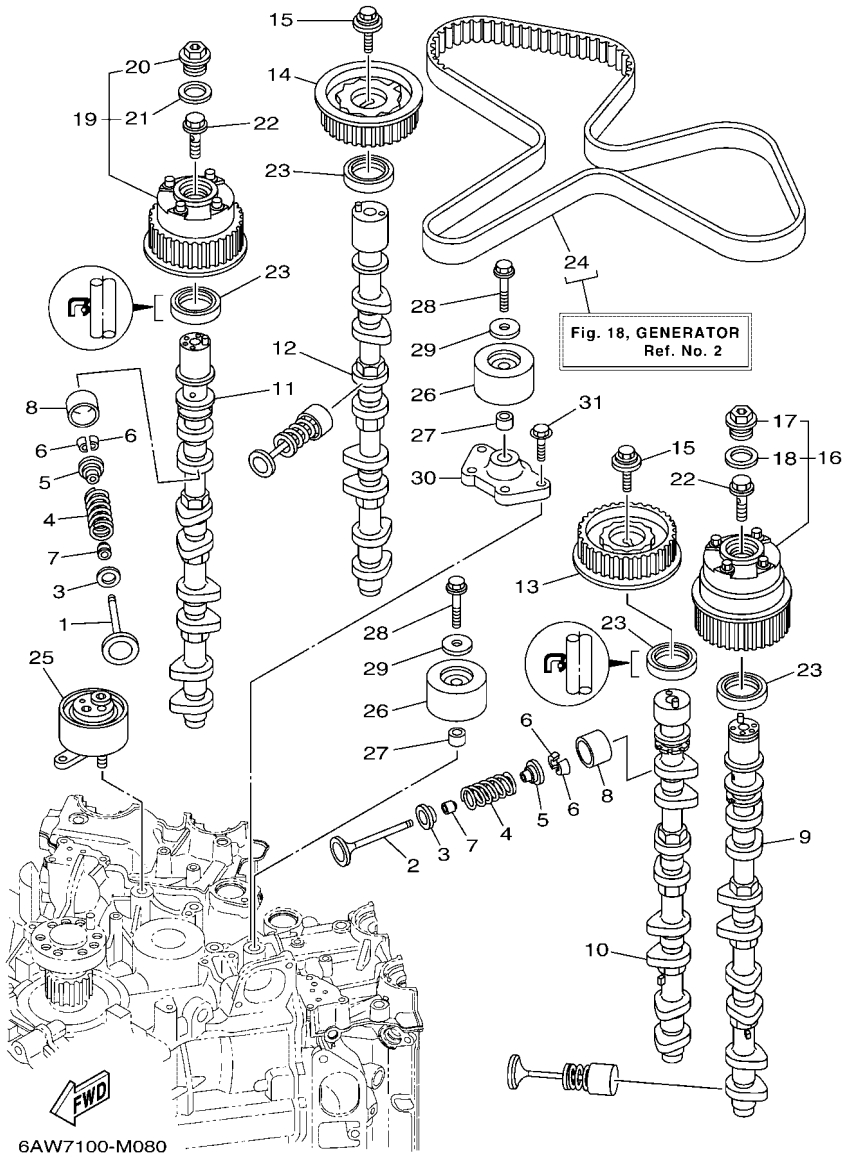

FIG. 8 VALVE — SOUPAPE

REF. NO.	PART NO. N° PIECES	DESCRIPTION DESCRIPTION	6AWD	6AXD				REMARKS REMARQUES
21	6P2–12663–00	.GASKET .JOINT	1	1				
22	6P2–12615–00	BOLT BOULON	2	2				
23	93102–38008	OIL SEAL JOINT SPY	4	4				
24	6AW–W4624–00	BELT (WITH ROTOR BOLTS) COURROIE (AVEC BOULON)	1	1				
25	6P2–11590–01	TENSIONER ASSY TENDEUR (ENS.)	1	1				
26	6P2–15512–00	GEAR, IDLER 1 PIGNON, INTERMEDIAIRE 1	2	2				
27	99530–14016	PIN, DOWEL GOUJON, D'ASSEMBLAGE	2	2				
28	90119–10M07	BOLT, WITH WASHER BOULON, AVEC RONDELLE	2	2				
29	90201–10M01	WASHER, PLATE RONDELLE, PLATE	2	2				
30	6AW–15544–00	STAY 1 SUPPORT 1	1	1				
31	90105–08178	BOLT, FLANGE BOULON, A COLLERETTE	4	4				

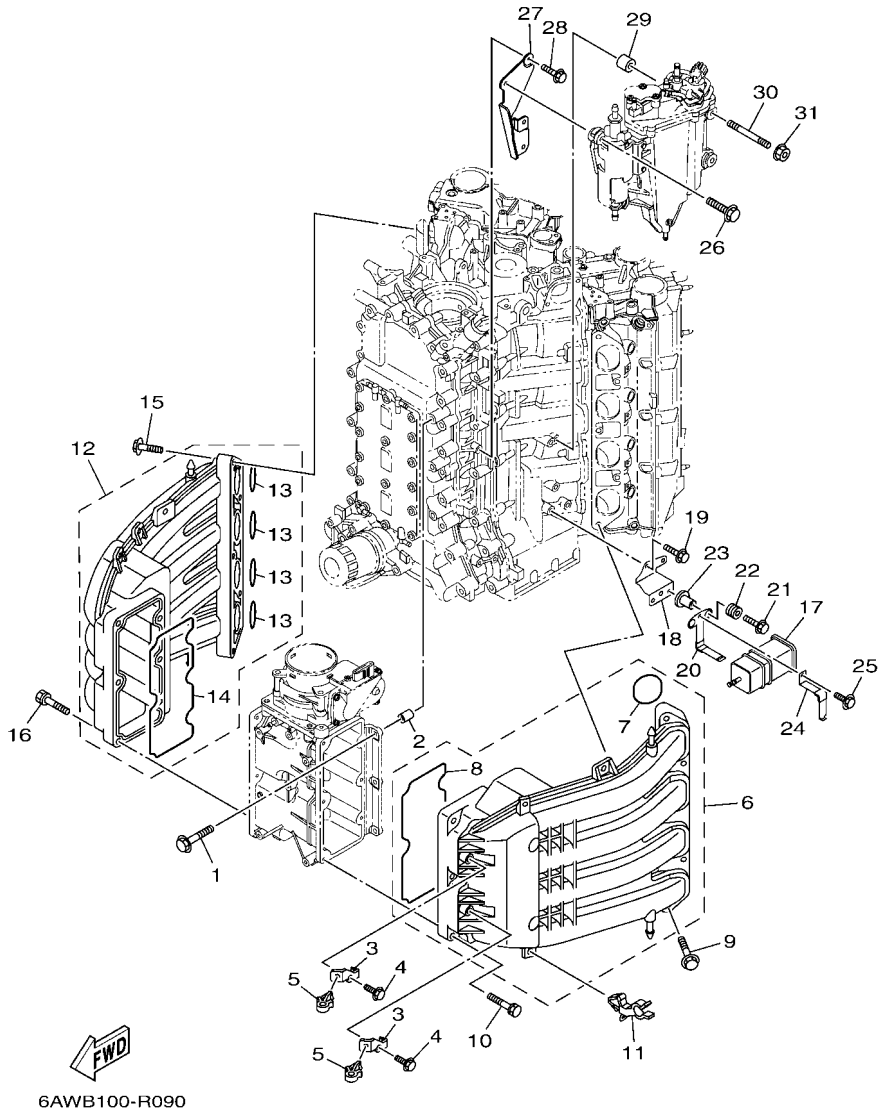

FIG. 9 INTAKE 1 — ADMISSION 1

REF. NO.	PART NO. N° PIECES	DESCRIPTION DESCRIPTION	6AWD	6AXD				REMARKS REMARQUES
1	95D75–08035	BOLT, FLANGE DEEP RECESS BOULON FIXATION	6	6				
2	99530–10114	PIN, DOWEL GOUJON, D'ASSEMBLAGE	2	2				
3	6AW–13782–00	STAY SUPPORT	2	2				
4	97E95–06512	BOLT, HEXAGON W/W DEEP RECESS VIS HEXAGONAL AVC RONDELLE	2	2				
5	90464–09023	CLAMP BRIDE	2	2				
6	6AW–13641–10	MANIFOLD, INTAKE 1 TUBULURE, ADMISSION 1	1	1				
7	6AW–13645–00	.GASKET, MANIFOLD 1 .JOINT, TUBULURE 1	4	4				
8	6AW–13646–00	.GASKET, MANIFOLD 2 .JOINT, TUBULURE 2	1	1				
9	90119–08022	BOLT, WITH WASHER BOULON, AVEC RONDELLE	5	5				
10	90119–06MA6	BOLT, WITH WASHER BOULON, AVEC RONDELLE	5	5				
11	90464–17006	CLAMP BRIDE	2	2				
12	6AW–13641–10	MANIFOLD, INTAKE 1 TUBULURE, ADMISSION 1	1	1				
13	6AW–13645–00	.GASKET, MANIFOLD 1 .JOINT, TUBULURE 1	4	4				
14	6AW–13646–00	.GASKET, MANIFOLD 2 .JOINT, TUBULURE 2	1	1				
15	90119–08022	BOLT, WITH WASHER BOULON, AVEC RONDELLE	5	5				
16	90119–06MA6	BOLT, WITH WASHER BOULON, AVEC RONDELLE	5	5				
17	6P2–24170–00	CANISTER ASSY BANDE, RASERVOIR A ESSENCE	1	1				
18	6AW–2134X–10	BRACKET, CANISTER SUPPORT	1	1				
19	95D95–06016	BOLT, FLANGE DEEP RECESS BOULON FIXATION	2	2				
20	69J–2134X–00	BRACKET, CANISTER SUPPORT	1	1				
21	90119–06M17	BOLT, WITH WASHER BOULON, AVEC RONDELLE	2	2				
22	90480–10M23	GROMMET PASSE-FIL	2	2				
23	90387–06289	COLLAR COLLERETTE	2	2				
24	69J–2419A–01	HOLDER SUPPORT	1	1				
25	97E95–06516	BOLT, HEXAGON W/W DEEP RECESS VIS HEXAGONAL AVC RONDELLE	1	1				
26	90119–06269	BOLT, WITH WASHER BOULON, AVEC RONDELLE	2	2				
27	6AW–24419–00	BRKT., SEPARATOR SUPPORT	1	1				

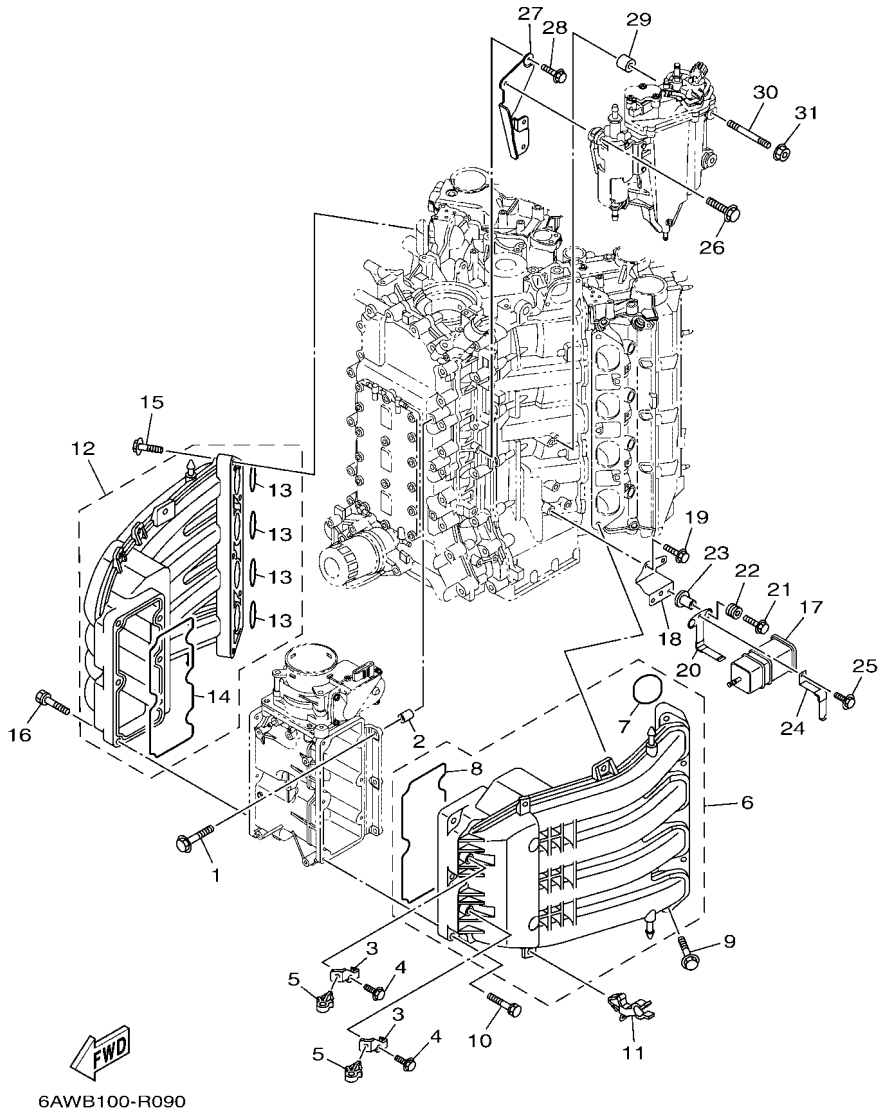

FIG. 9 INTAKE 1 — ADMISSION 1

REF. NO.	PART NO. N° PIECES	DESCRIPTION DESCRIPTION	6AWD	6AXD				REMARKS REMARQUES
28	95D95–06016	BOLT, FLANGE DEEP RECESS BOULON FIXATION	2	2				
29	90387–06276	COLLAR COLLERETTE	2	2				
30	90116–06046	BOLT, STUD GOUJON	2	2				
31	90179–06M28	NUT ECROU	2	2				

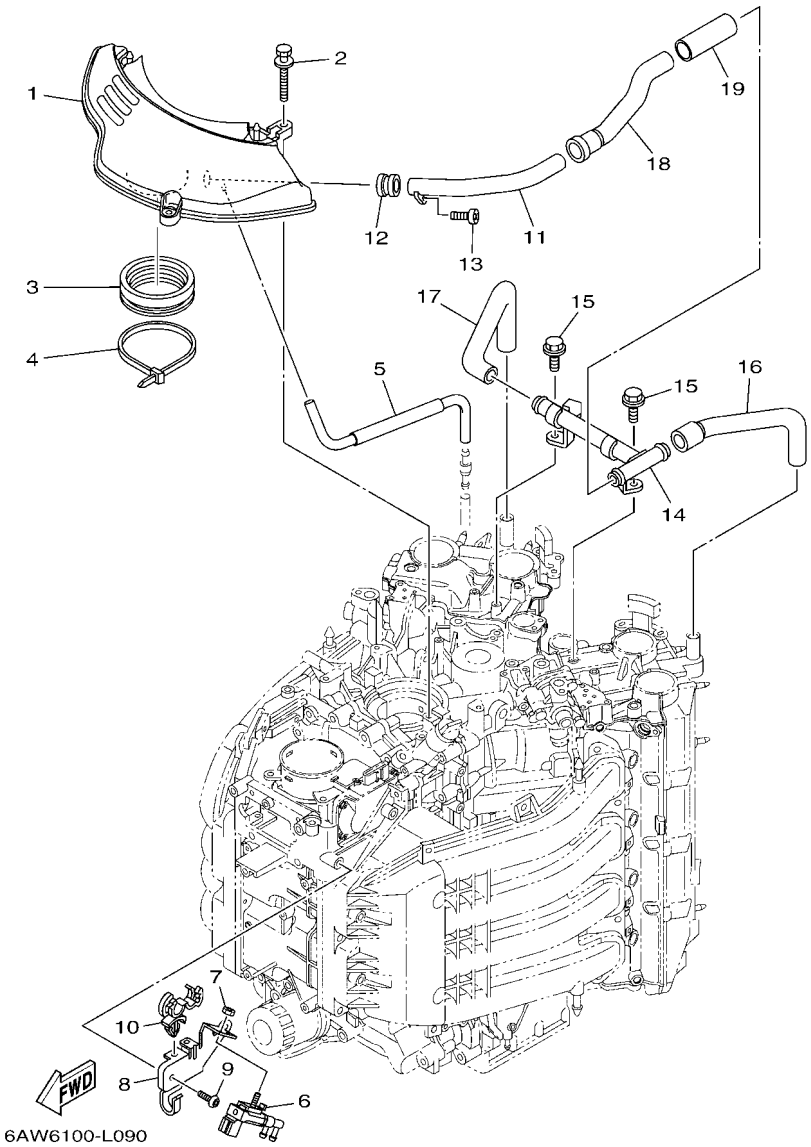

FIG. 10 INTAKE 2 — ADMISSION 2

REF. NO.	PART NO. N° PIECES	DESCRIPTION DESCRIPTION	6AWD	6AXD				REMARKS REMARQUES
1	6AW–14440–00	SILENCER ASSY, INTAKE SIENCIEUX D'ADMISSION	1	1				
2	90119–06M88	BOLT, WITH WASHER BOULON, AVEC RONDELLE	3	3				
3	6AW–1441J–00	PIPE, SILENCER DURITE, DE SILENCIEUX	1	1				
4	90464–99004	CLAMP BRIDE	1	1				
5	6AW–14419–00	PIPE DURITE	1	1				
6	6C5–86120–00	SOLENOID VALVE ASSY SOLENOIDE	1	1				
7	95380–06600	NUT, HEXAGON ECROU	1	1				
8	6AW–8611A–00	HOLDER SOLENOID SUPPORT SOLENOIDE	1	1				
9	90111–06144	BOLT,HEX. SOCKET BUTTON BOULON	2	2				
10	90464–18246	CLAMP BRIDE	1	1				
11	6AW–15373–00	PIPE, BREATHER DURITE DE RENIFLARD	1	1				
12	6AW–14445–00	GROMMET RONDELLE CAOUTCHOUC	1	1				
13	97780–60620	SCREW, TAPPING VIS, TETE BOMBEE	1	1				
14	6AW–15393–00	PIPE, BREATHER 2 DURITE, RENIFLARD 2	1	1				
15	97E75–06514	BOLT, HEXAGON W/W DEEP RECESS VIS HEXAGONAL AVC RONDELLE	2	2				
16	6AW–1531A–00	HOSE, BREATHER 1 DURITE DE RENIFLARD 1	1	1				
17	6AW–1531A–10	HOSE, BREATHER 1 DURITE DE RENIFLARD 1	1	1				
18	6AW–1532A–00	HOSE, BREATHER 2 DURITE DE RENIFLARD 2	1	1				
19	90446–32002	HOSE (L90) DURITE (L90)	1	1				

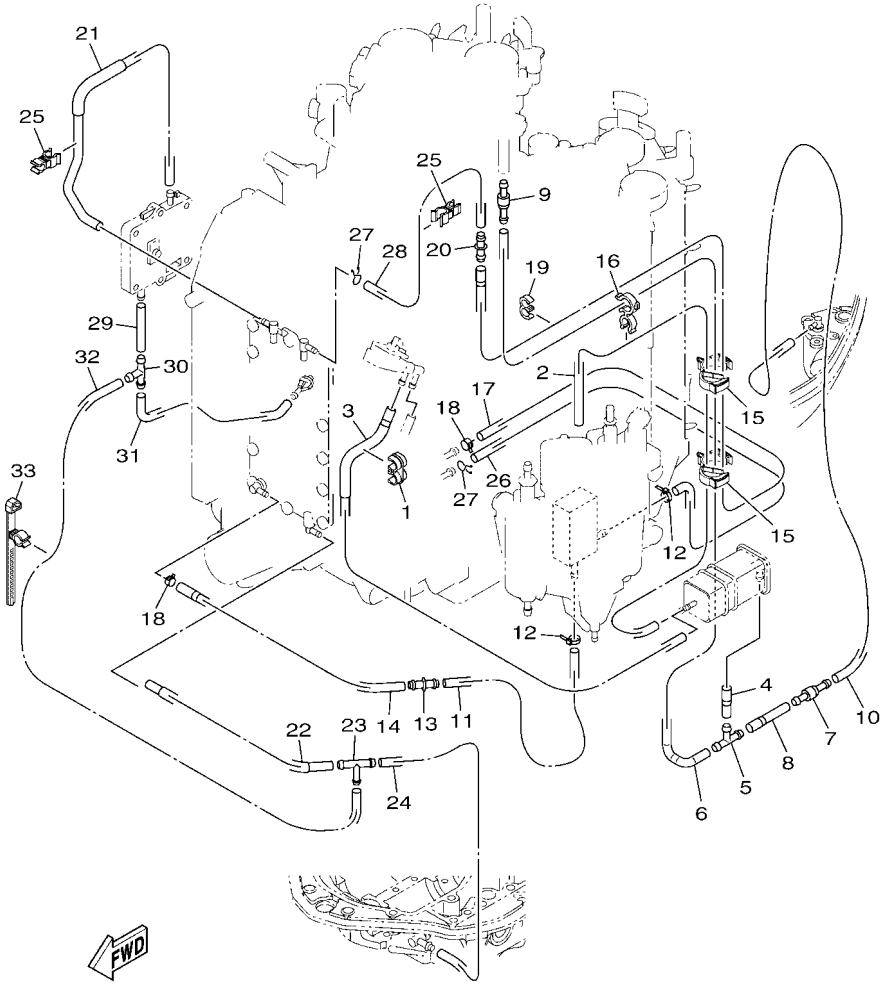

6AW7100-M110

FIG. 11 INTAKE 3 — ADMISSION 3

REF. NO.	PART NO. N° PIECES	DESCRIPTION DESCRIPTION	6AWD	6AXD				REMARKS REMARQUES
1	90464–12224	CLAMP BRIDE	1	1				
2	6AW–1475A–10	PIPE 1 DURITE 1	1	1				
3	6AW–24312–10	PIPE 2 DURITE 2	1	1				
4	6AW–13545–10	HOSE 1 DURITE 1	1	1				
5	688–24378–00	PIPE, JOINT 3 DURITE RACCORDEMENT 3	1	1				
6	6AW–13548–10	HOSE, AIR 4 DURITE, A AIR 4	1	1				
7	6E5–21744–00	BREATHER RENIFLARD	1	1				
8	6CB–13548–00	HOSE, AIR 4 DURITE, A AIR 4	1	1				
9	6E5–21744–00	BREATHER RENIFLARD	1	1				
10	6AW–13547–10	HOSE 3 DURITE 3	1	1				
11	90445–09104	HOSE (L300) DURITE (L300)	1	1				
12	90465–11M10	CLAMP BRIDE	2	2				
13	6CE–24376–01	PIPE, JOINT 1 DURITE 1, RACCORDEMENT	1	1				
14	6AW–12589–00	HOSE 6 TUYAU 6	1	1				
15	90464–32002	CLAMP BRIDE	2	2				
16	90464–09M42	CLAMP BRIDE	1	1				
17	6AW–12576–20	HOSE 1 TUYAU 1	1	1				
18	90467–11136	CLIP JONC	2	2				
19	90464–60067	CLAMP BRIDE	1	1				
20	6CE–24376–01	PIPE, JOINT 1 DURITE 1, RACCORDEMENT	1	1				
21	6AW–12577–00	HOSE 2 TUYAU 2	1	1				
22	6AW–12578–00	HOSE 3 TUYAU 3	1	1				
23	68F–14485–00	PIPE, JOINT DURITE	1	1				
24	6AW–12579–10	HOSE 4 TUYAU 4	1	1				
25	90464–10010	CLAMP BRIDE	2	2				
26	90445–09120	HOSE (L600) DURITE (L600)	1	1				
27	90467–08M10	CLIP JONC	2	2				

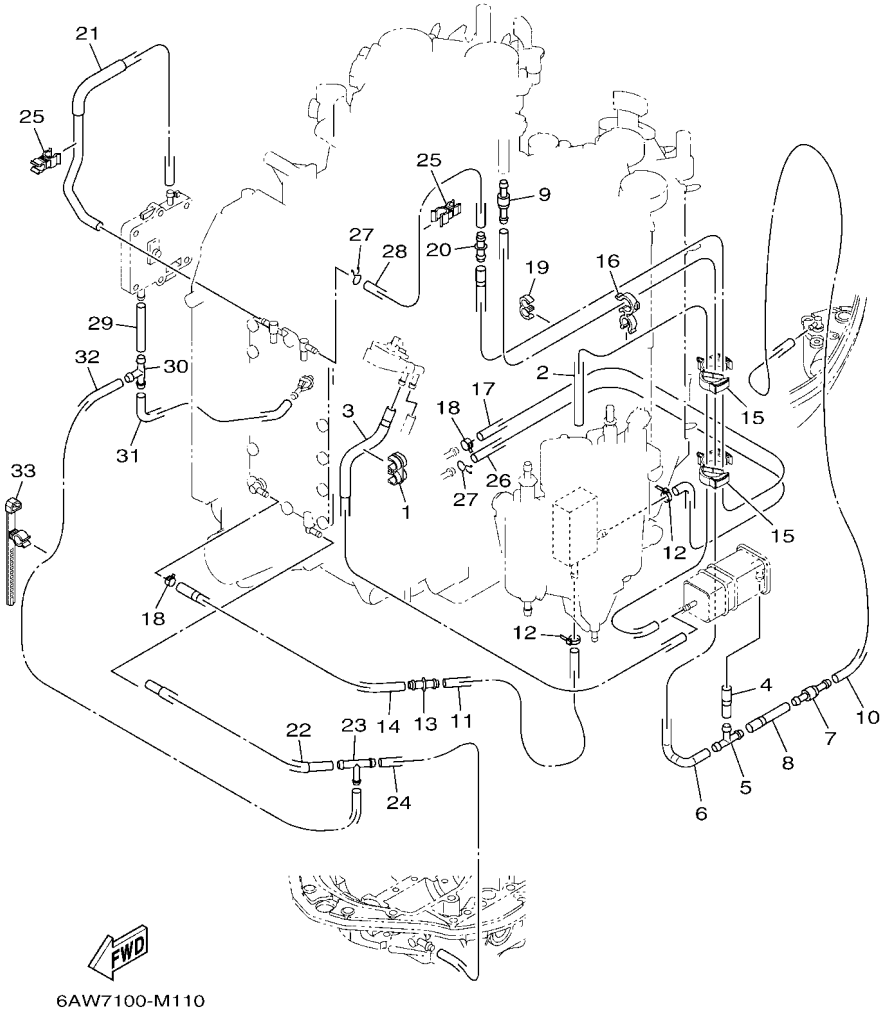

FIG. 11 INTAKE 3 — ADMISSION 3

REF. NO.	PART NO. N° PIECES	DESCRIPTION DESCRIPTION	6AWD	6AXD				REMARKS REMARQUES
28	6AW–12483–00	PIPE 3 DURITE 3	1	1				
29	90445–09026	HOSE (L68) DURITE (L68)	1	1				
30	688–24378–00	PIPE, JOINT 3 DURITE RACCORDEMENT 3	1	1				
31	6AW–12482–10	PIPE 2 DURITE 2	1	1				
32	6AW–12588–00	HOSE 5 TUYAU 5	1	1				
33	90464–30005	CLAMP BRIDE	1	1				

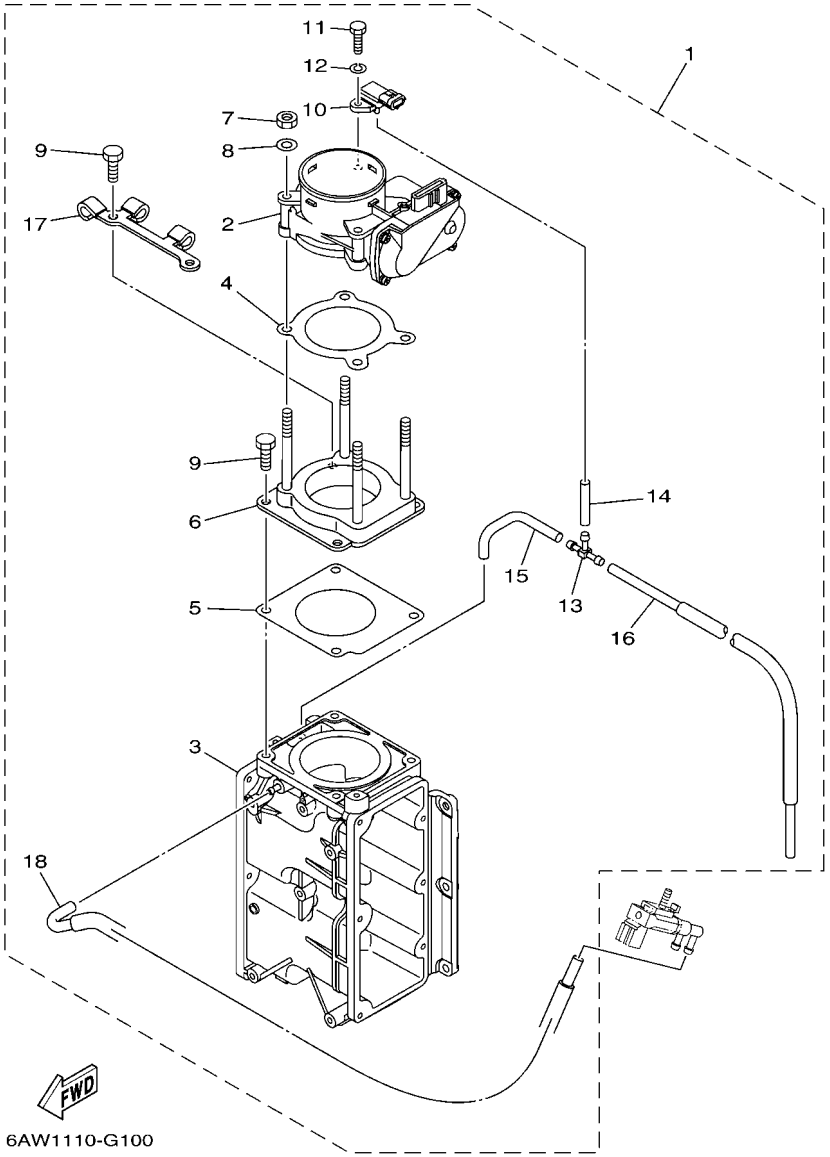

FIG. 12 THROTTLE BODY ASSY 1 — CARTER D'ACCELERATEUR 1

REF. NO.	PART NO. N° PIECES	DESCRIPTION DESCRIPTION	6AWD	6AXD				REMARKS REMARQUES
1	6AW–13750–03	THROTTLE BODY ASSY CARTER D'ACCELERATEUR COMPLET	1	1				
2	6AW–13751–01	.BODY, THROTTLE 1 .CARTER 1	1	1				
3	6AW–13711–01	.MIXING BODY .CHAMBRE DE MELANGE	1	1				
4	6AW–13556–00	.GASKET, MANIFOLD .JOINT, TUBULURE	1	1				
5	6AW–13557–00	.GASKET .JOINT	1	1				
6	6AW–14360–00	.THROTTLE DAMPER ASSY .AMORIISSEUR D'ACCELERATEUR	1	1				
7	6P2–13588–00	.NUT .ECROU	4	4				
8	6P2–13578–00	.WASHER .RONDELLE	4	4				
9	6P2–14496–00	.BOLT .BOULON	4	4				
10	6P2–82380–00	.SENSOR, PRESSURE .SONDE DE PRESSION	1	1				
11	6P2–13573–00	.BOLT 1 .BOULON 1	1	1				
12	68V–14356–00	.WASHER, SPRING .RONDELLE	1	1				
13	4N0–14251–00	.NIPPLE .RACCORD	1	1				
14	5JW–24311–00	.PIPE, FUEL 1 .DURITE A ESSENCE	1	1				
15	6AW–82364–00	.HOSE 2 .DURITE 2	1	1				
16	6AW–82365–00	.HOSE 3 .DURITE 3	1	1				
17	6AW–11188–00	.CLIP, PIPE .AGRAFE, TUBE	1	1				
18	6AW–82366–00	.HOSE 4 .DURITE 4	1	1				

FIG. 13 THROTTLE BODY ASSY 2 CARTER D'ACCELERATEUR 2

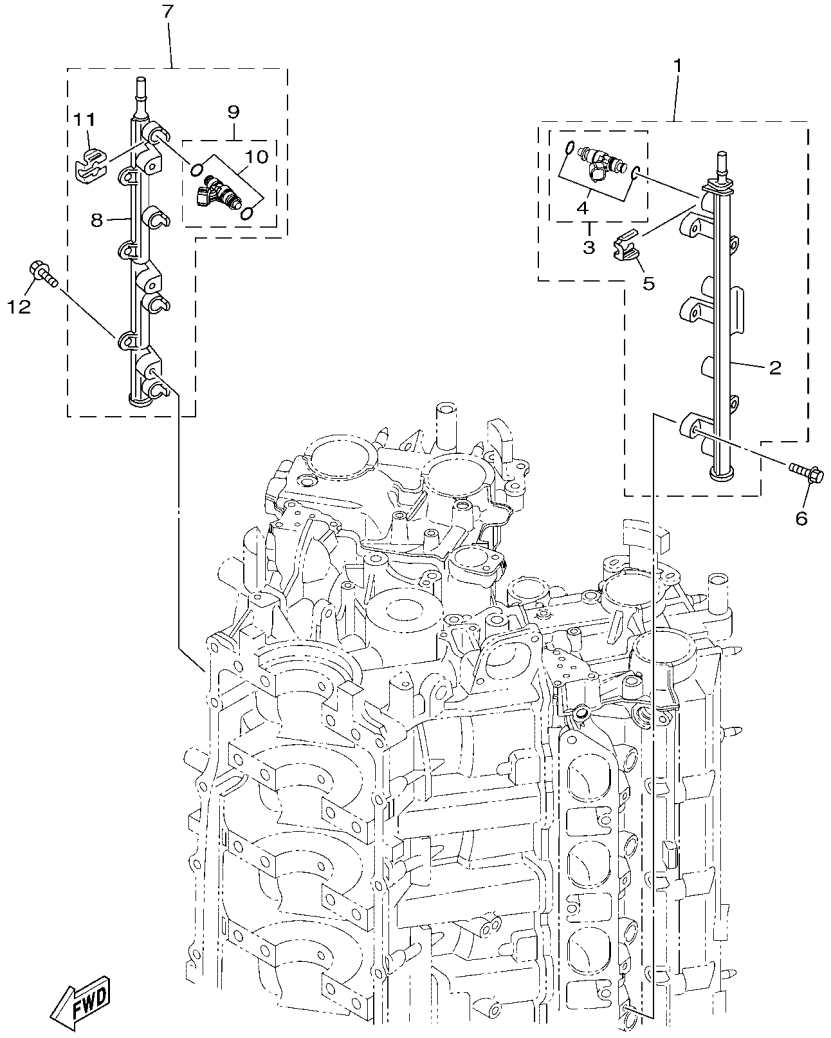

REF. NO.	PART NO. N° PIECES	DESCRIPTION DESCRIPTION	6AWD	6AXD				REMARKS REMARQUES
1	6AW–13160–10	DELIVERY PIPE ASSY 1 ENS. TUBE DE REFOULEMENT 1	1	1				
2	6AW–13161–10	.PIPE, DELIVERY 1 .DURITE REFOULEMENT 1	1	1				
3	6AW–13761–00	.INJECTOR .INJECTEUR	4	4				
4	6AW–1410B–00	..PACKING KIT ..POCHETTE DE JOINTS	1	1				
5	6AW–13577–10	.CLIP .AGRAFE	4	4				
6	90105–06M08	BOLT, FLANGE BOULON, A COLLERETTE	3	3				
7	6AW–13170–10	DELIVERY PIPE ASSY 2 ENS. TUBE DE REFOULEMENT 2	1	1				
8	6AW–13171–10	.PIPE, DELIVERY 2 .DURITE REFOULEMENT	1	1				
9	6AW–13761–00	.INJECTOR .INJECTEUR	4	4				
10	6AW–1410B–00	..PACKING KIT ..POCHETTE DE JOINTS	1	1				
11	6AW–13577–10	.CLIP .AGRAFE	4	4				
12	90105–06M08	BOLT, FLANGE BOULON, A COLLERETTE	3	3				

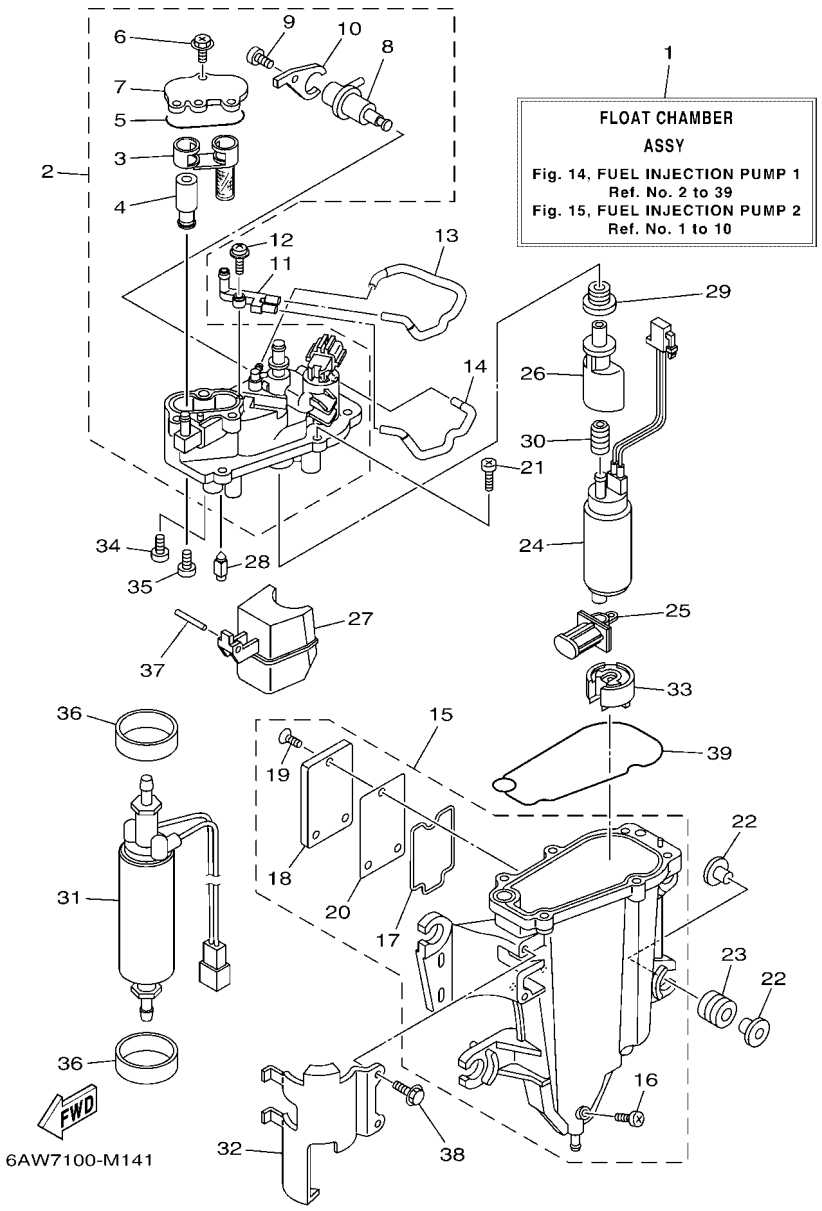

FIG. 14 FUEL INJECTION PUMP 1 POMPE A INJECTEUR 1

REF. NO.	PART NO. N° PIECES	DESCRIPTION DESCRIPTION	6AWD	6AXD				REMARKS REMARQUES
1	6AW–14180–22	FLOAT CHAMBER ASSY CUVE DE FLOTTEUR	1	1				
2	6AW–14182–11	COVER, FLOAT CHAMBER COUVERCLE, CUVE DE FLOTTEUR	1	1				
3	6CB–24501–01	.FILTER, FUEL .FILTRE	1	1				
4	6CB–24460–00	.RELIEF VALVE ASSY .SOUPAPE DE SECURITE COMPLET	1	1				
5	6CB–13016–00	.O-RING .JOINT TORIQUE	1	1				
6	6CB–14216–00	.SCREW .VIS	3	3				
7	6CB–24217–00	.COVER .COUVERCLE	1	1				
8	6CB–13906–01	.REGULATOR, PRESSURE .REGULATEUR DE PRESSION	1	1				
9	6CB–14564–00	.SCREW .VIS	1	1				
10	6CB–14146–00	.PLATE .PLAQUE	1	1				
11	68V–24379–10	PIPE, JOINT 4 DURITE RACCORDEMENT 4	1	1				
12	68V–14216–00	SCREW VIS	1	1				
13	68V–1475H–00	PIPE 5 DURITE 5	1	1				
14	68V–1475J–00	PIPE 6 DURITE 6	1	1				
15	6CB–14181–09	BODY, FLOAT CHAMBER 1 CORPS, CUVE DE FLOTTEUR 1	1	1				
16	6P2–14191–00	.PLUG, DRAIN .PLOT, VIDANGE	1	1				
17	6CB–14239–00	.SEAL .JOINT	1	1				
18	6CB–24452–10	.COVER .COUVERCLE	1	1				
19	6CB–14429–01	.SCREW .VIS	3	3				
20	6CB–24482–00	.GASKET 1 .JOINT 1	1	1				
21	63P–14567–00	SCREW VIS	6	6				
22	69J–13716–00	COLLAR COLLERETTE	8	8				
23	6CB–13593–00	DAMPER AMORTISSEUR	4	4				
24	6AW–13907–10	FUEL PUMP COMP. POMPE A CARBURANT COMP.	1	1				
25	63P–13915–00	FILTER FILTRE	1	1				
26	6AW–13132–00	JOINT RACCORD	1	1				
27	6CB–14985–00	FLOAT FLOTTEUR	1	1				

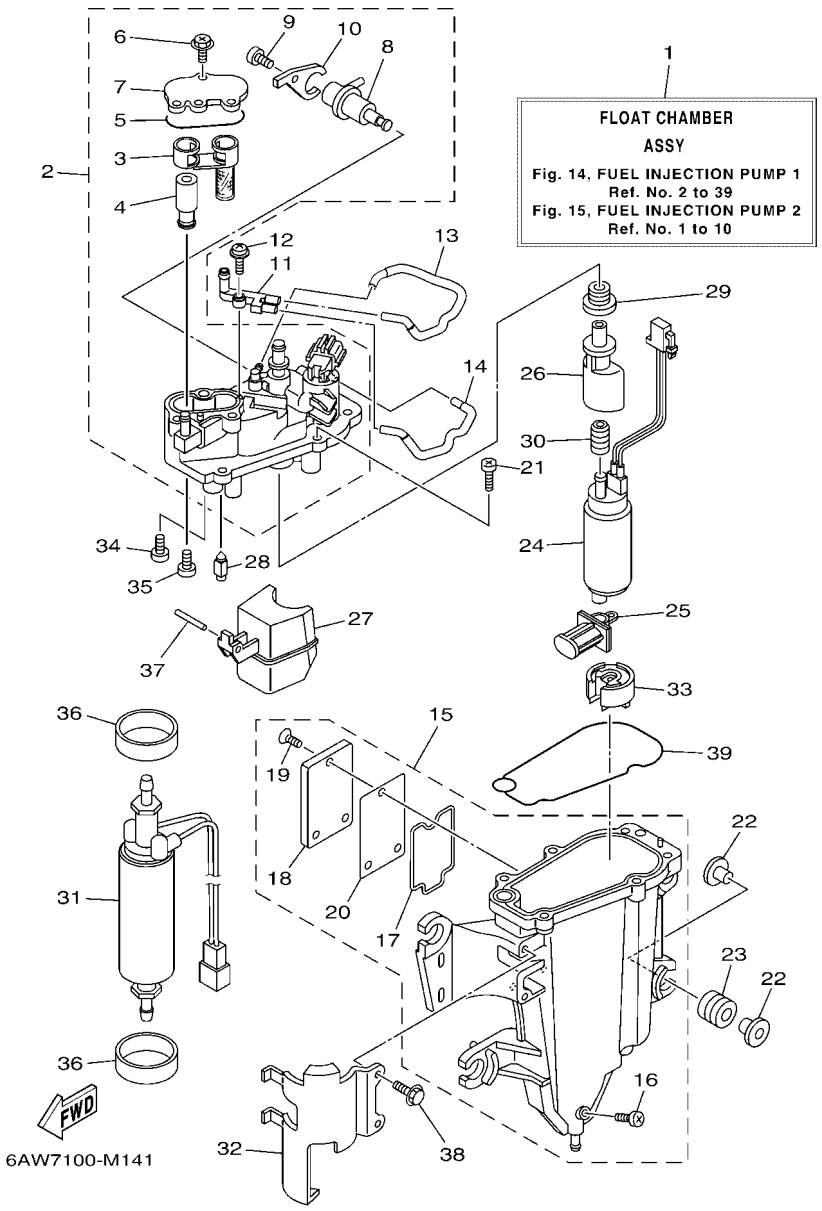

FIG. 14 FUEL INJECTION PUMP 1 POMPE A INJECTEUR 1

REF. NO.	PART NO. N° PIECES	DESCRIPTION DESCRIPTION	6AWD	6AXD				REMARKS REMARQUES
28	6CB–14546–00	VALVE, NEEDLE POINTEAU	1	1				
29	6CB–1447B–00	BUSH 1 DOUILLE 1	1	1				
30	6AW–13781–00	DAMPER, PUMP AMORTISSEUR, POMPE	1	1				
31	6CB–24410–01	FUEL PUMP ASSY POMPE A ESSENCE	1	1				
32	6AW–24491–10	BRACKET, FUEL PUMP SUPPORT, POMPE A ESSENCE	1	1				
33	6AW–13784–00	COVER, PUMP COUVERCLE, POMPE	1	1				
34	4SV–24453–00	SCREW VIS	1	1				
35	98507–04008	SCREW, PAN HEAD VIS, TETE TRONCONIQUE	1	1				
36	6CB–24492–00	BUSH, FUEL PUMP BAGUE	2	2				
37	6P2–14386–00	PIN, FLOAT AXE, FLOTTEUR	1	1				
38	6CB–24592–00	BOLT BOLTE	2	2				
39	6CB–14984–00	GASKET, FLOAT CHAMBER JOINT, CUVE DE FLOTTEUR	1	1				

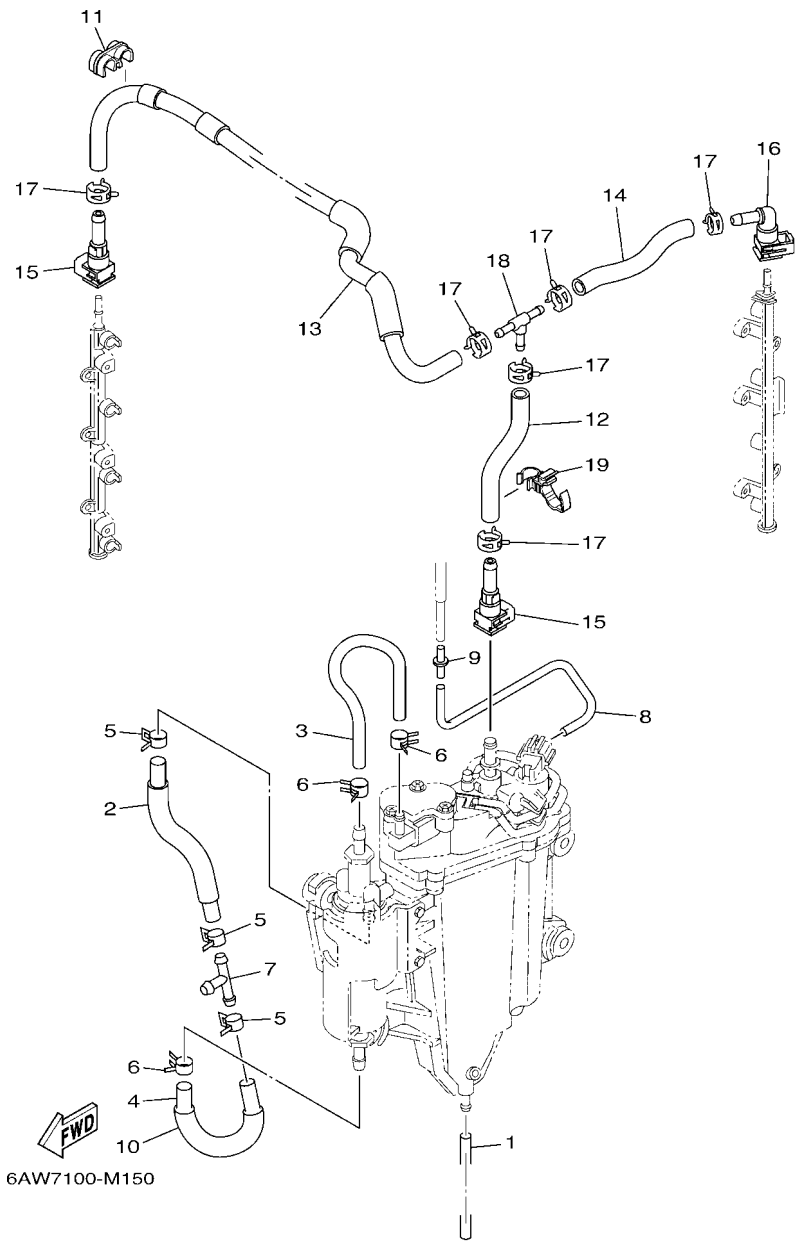

FIG. 15 FUEL INJECTION PUMP 2 — POMPE A INJECTEUR 2

REF. NO.	PART NO. N° PIECES	DESCRIPTION DESCRIPTION	6AWD	6AXD				REMARKS REMARQUES
1	6P2–14149–00	PIPE DURITE	1	1				
2	6AW–24323–20	PIPE 12 DURITE 12	1	1				
3	6AW–24324–20	PIPE 13 DURITE 13	1	1				
4	6AW–24317–20	PIPE 7 DURITE 7	1	1				
5	69J–14137–00	CLIP JONC	3	3				
6	68V–13577–00	CLIP AGRAFE	3	3				
7	6E5–24378–00	PIPE, JOINT 3 DURITE, RACCORDEMENT 3	1	1				
8	6AW–13532–00	HOSE, VACUUM SENSING 3 DURITE 3	1	1				
9	6P2–24376–00	PIPE, JOINT 1 DURITE 1, RACCORDEMENT	1	1				
10	90446–18002	HOSE DURITE	1	1				
11	90464–12224	CLAMP BRIDE	1	1				
12	6AW–13971–30	PIPE, FUEL 1 TUBE 1, CARBURANT	1	1				
13	6AW–13973–30	PIPE, FUEL 3 TUBE 3, CARBURANT	1	1				
14	6AW–13974–30	PIPE, FUEL 4 TUBE 4, CARBURANT	1	1				
15	6AW–24300–10	FUEL PIPE JOINT DURITE RACCORDEMT. A ESSENCE	2	2				
16	6AW–24300–00	FUEL PIPE JOINT DURITE RACCORDEMT. A ESSENCE	1	1				
17	68V–13577–00	CLIP AGRAFE	6	6				
18	6CB–24461–00	PIPE, JOINT DURITE, RACCORDEMENT	1	1				
19	90464–12012	CLAMP BRIDE	1	1				

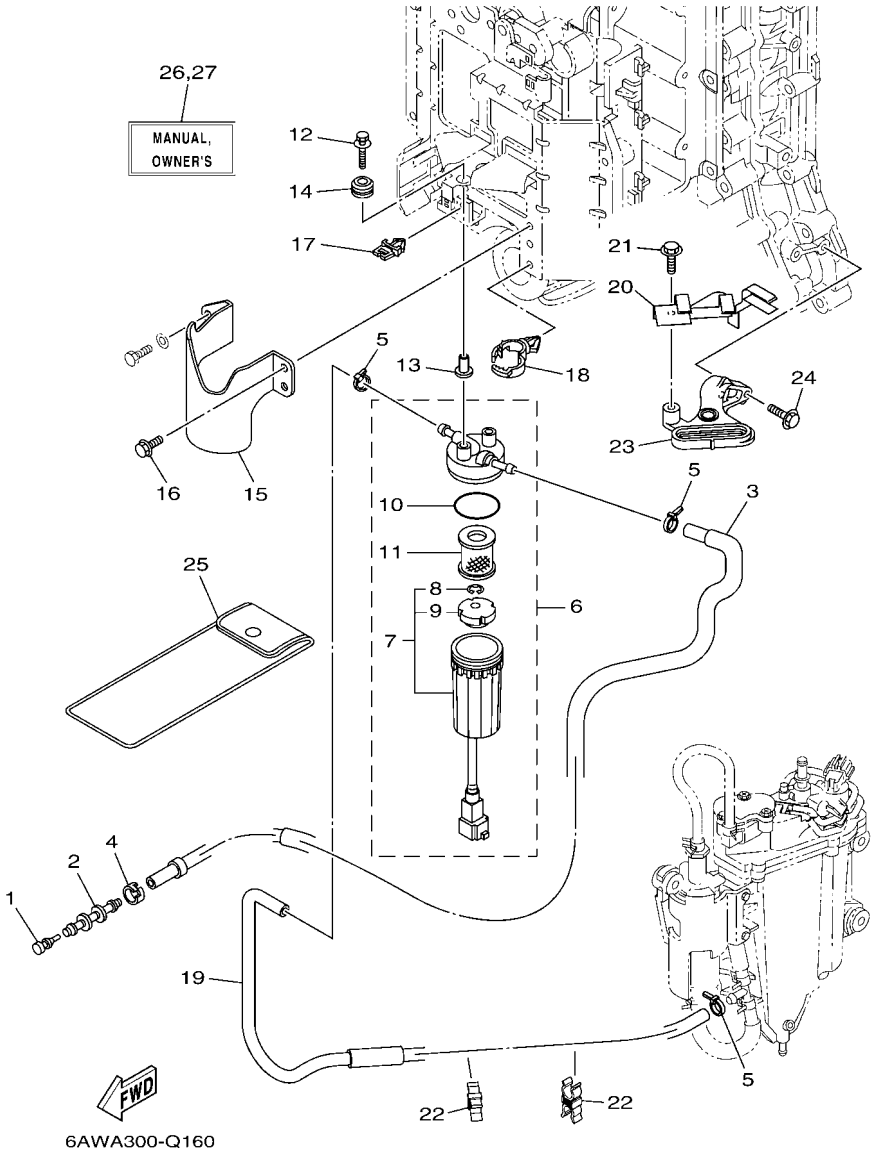

FIG. 16 FUEL 1 — CARBURANT 1

REF. NO.	PART NO. N° PIECES	DESCRIPTION DESCRIPTION	6AWD	6AXD				REMARKS REMARQUES
1	689–85547–00	DAMPER AMORTISSEUR	1	1				
2	6AW–24377–01	PIPE, JOINT 2 DURITE RACCORDEMENT 2	1	1				
3	6AW–24311–11	PIPE, FUEL 1 DURITE A ESSENCE	1	1				
4	6E5–24351–51	BAND 1 COLLIER 1	1	1				
5	90465–11M10	CLAMP BRIDE	3	3				
6	6P3–24560–22	FILTER ASSY ENS FILTRE	1	1				
7	6P3–24562–21	.CUP, FILTER .CUVETTE, FILTRE	1	1				
8	6P3–24519–00	..CLIP ..JONC	1	1				
9	6P3–24469–00	..FLOAT, WATER LEVEL ..FLOTTEUR	1	1				
10	6P3–24564–00	.GASKET .JOINT	1	1				
11	6P3–24563–01	.ELEMENT, FILTER .ELEMENT, FILTRE	1	1				
12	90119–06M17	BOLT, WITH WASHER BOULON, AVEC RONDELLE	2	2				
13	90387–06289	COLLAR COLLERETTE	2	2				
14	90480–10M23	GROMMET PASSE-FIL	2	2				
15	6AW–24596–00	COVER COUVERCLE	1	1				
16	97E95–06512	BOLT, HEXAGON W/W DEEP RECESS VIS HEXAGONAL AVC RONDELLE	2	2				
17	90464–11121	CLAMP BRIDE	1	1				
18	90464–20181	CLAMP BRIDE	1	1				
19	6AW–24313–10	PIPE 3 DURITE 3	1	1				
20	6AW–24422–00	PLATE PLAQUETTE	1	1				
21	95D95–06012	BOLT, FLANGE DEEP RECESS BOULON FIXATION	1	1				
22	90464–11009	CLAMP BRIDE	2	2				
23	6AW–44117–00	BRACKET SUPPORT	1	1				
24	95D95–06025	BOLT, FLANGE DEEP RECESS BOULON FIXATION	2	2				
25	69J–28100–02	TOOL KIT TROUSSE A OUTILS	1	1				AP AP
26	6AW–28199–7F–E0	MANUAL,OWNER'S MANUEL D'UTILISATION	1	1				UR (E) UR (E)
	6AW–28199–7F–F0	MANUAL,OWNER'S MANUEL D'UTILISATION	1	1				UR (F) UR (F)

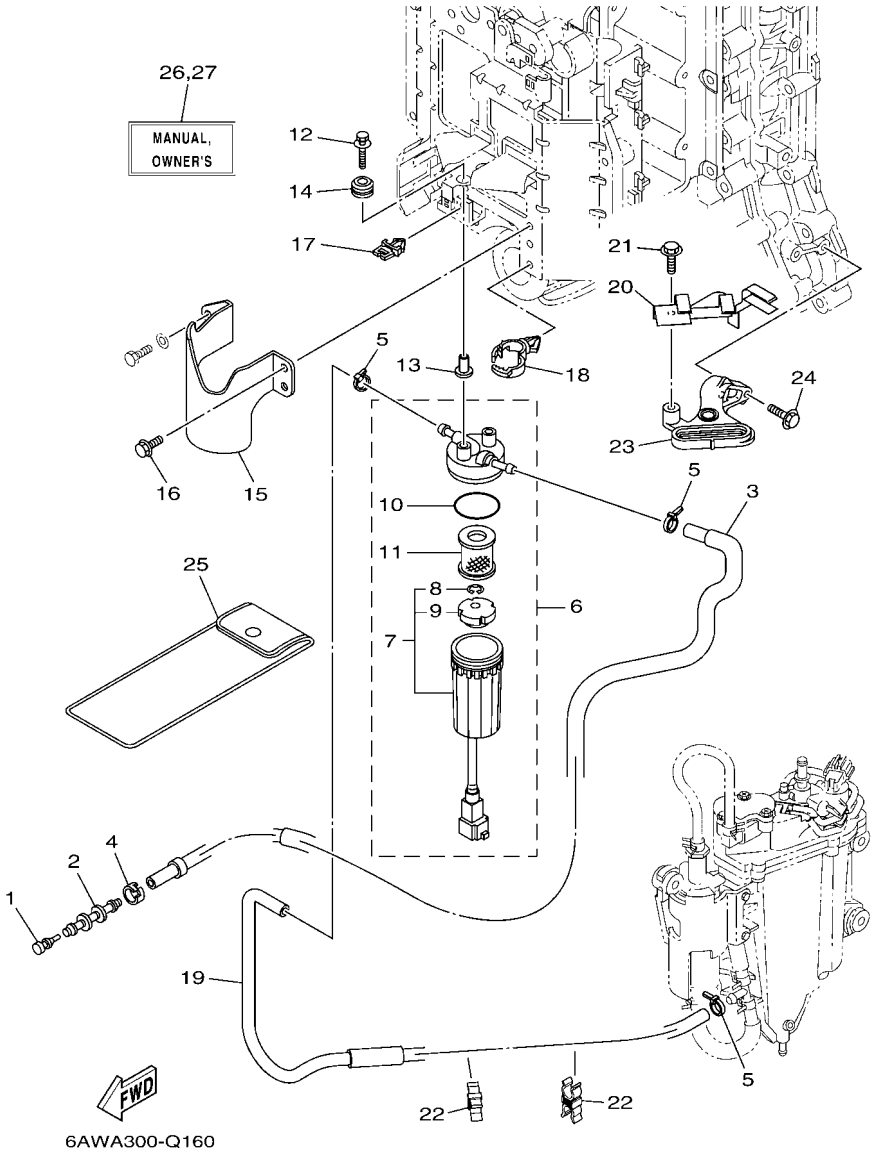

FIG. 16 FUEL 1 — CARBURANT 1

REF. NO.	PART NO. N° PIECES	DESCRIPTION DESCRIPTION	6AWD	6AXD				REMARKS REMARQUES
26	6AW–28199–7F–S0	MANUAL,OWNER'S MANUEL D'UTILISATION	1	1				UR (ES) UR (ES)
	6AW–28199–7F–G0	MANUAL,OWNER'S MANUEL D'UTILISATION	1	1				UR (D) UR (D)
	6AW–28199–7F–D0	MANUAL,OWNER'S MANUEL D'UTILISATION	1	1				UR (NL) UR (NL)
	6AW–28199–7F–H0	MANUAL,OWNER'S MANUEL D'UTILISATION	1	1				UR (I) UR (I)
27	6AW–28199–8F–K0	MANUAL,OWNER'S MANUEL D'UTILISATION	1	1				UR (DK) UR (DK)
	6AW–28199–8F–R0	MANUAL,OWNER'S MANUEL D'UTILISATION	1	1				UR (GR) UR (GR)
	6AW–28199–8F–P0	MANUAL,OWNER'S MANUEL D'UTILISATION	1	1				UR (P) UR (P)
	6AW–28199–8F–N0	MANUAL,OWNER'S MANUEL D'UTILISATION	1	1				UR (N) UR (N)
	6AW–28199–8F–M0	MANUAL,OWNER'S MANUEL D'UTILISATION	1	1				UR (S) UR (S)
	6AW–28199–8F–L0	MANUAL,OWNER'S MANUEL D'UTILISATION	1	1				UR (SF) UR (SF)

FIG. 17 FUEL 2 — CARBURANT 2

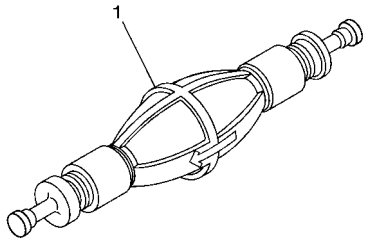

6AW6100-L160

REF. NO.	PART NO. N° PIECES	DESCRIPTION DESCRIPTION	6AWD	6AXD				REMARKS REMARQUES
1	6AW–24360–01	PRIMER PUMP ASSY POMPE D'AMORCAGE	1	1				AP AP

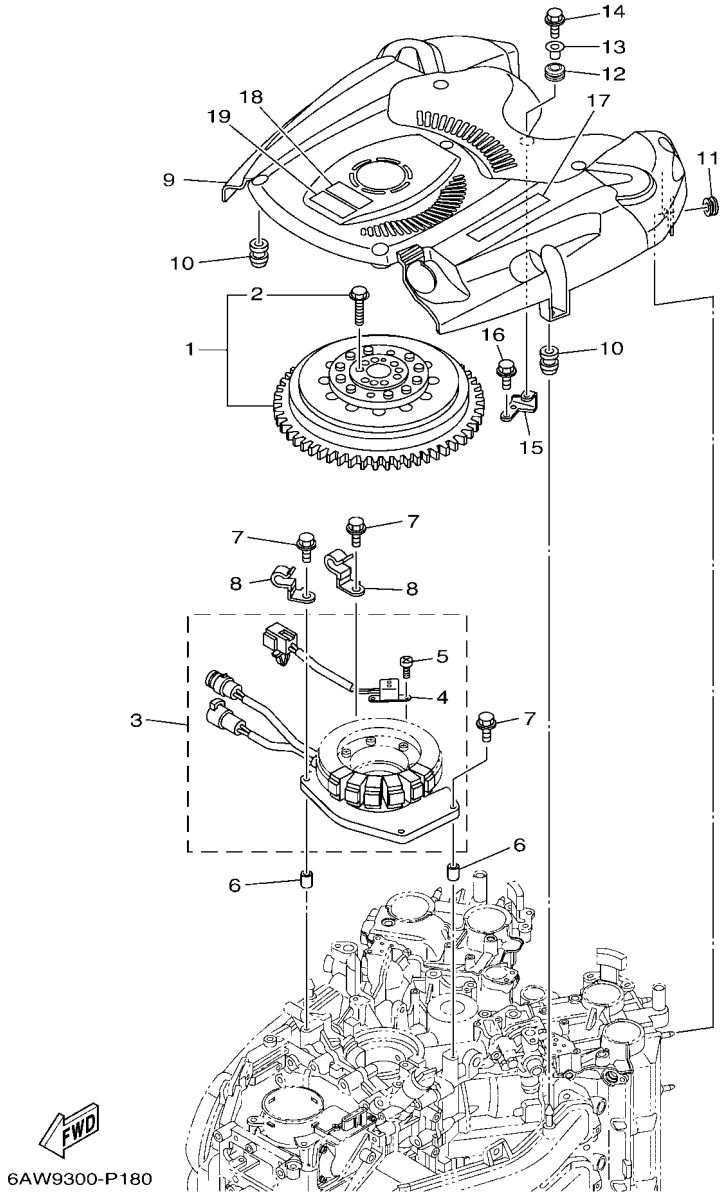

FIG. 18 GENERATOR — GENERATRICE

REF. NO.	PART NO. N° PIECES	DESCRIPTION DESCRIPTION	6AWD	6AXD				REMARKS REMARQUES
1	6AW–W8145–01	ROTOR ASSY WITH BOLTS ROTOR COMPLET AVEC BOULON	1	1				
2	6EK–W9010–00	.BOLT SET .BOULON ENS.	1	1				
3	6AW–81460–00	BASE ASSY ENS. FLASQUE	1	1				
4	6AW–85580–00	.COIL, PULSER .BOBINE, PULSEUR	1	1				
5	63D–81345–00	.SCREW, WITH WASHER (M5X12) .VIS, AVEC RONDELLE (M5X12)	2	2				
6	99530–08012	PIN, DOWEL GOUJON, D'ASSEMBLAGE	2	2				
7	97E95–06630	BOLT, HEXAGON W/W DEEP RECESS VIS HEXAGONAL AVC RONDELLE	4	4				
8	90462–10042	CLAMP BRIDE	2	2				
9	6AW–81337–02	COVER, FLYWHEEL COUVERCLE, VOLANT	1	1				
10	663–82317–01	DAMPER, IGNITION COIL AMORTISSEUR, BOBINE D'ALLUM	4	4				
11	90480–12314	GROMMET PASSE-FIL	2	2				
12	90480–15M31	GROMMET PASSE-FIL	1	1				
13	90387–06285	COLLAR COLLERETTE	1	1				
14	95D95–06020	BOLT, FLANGE DEEP RECESS BOULON FIXATION	1	1				
15	6AW–8132G–00	PLATE PLAQUE	1	1				
16	97E75–06514	BOLT, HEXAGON W/W DEEP RECESS VIS HEXAGONAL AVC RONDELLE	2	2				
17	6AW–13437–62	MARK, CAUTION MAKER	1	1				
18	6EE–81994–40	LABEL, SAFETY ETIQUETTE, SECURITE	1	1				
19	6EE–81994–50	LABEL, SAFETY ETIQUETTE, SECURITE	1	1				

FIG. 19 ELECTRICAL 1 — PARTIE ELECTRIQUE 1

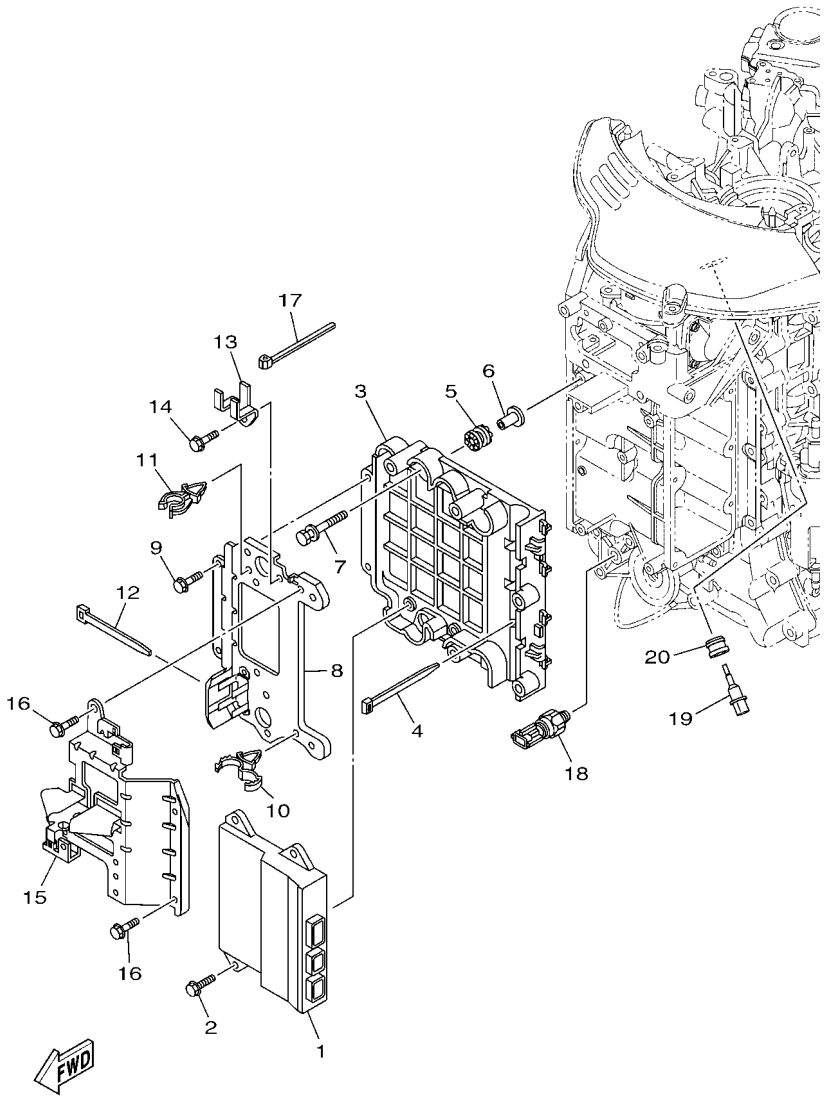

REF. NO.	PART NO. N° PIECES	DESCRIPTION DESCRIPTION	6AWD	6AXD				REMARKS REMARQUES
1	6AW–8591A–51	ENGINE CONTROL UNIT ASSY BLOC DE CONTROL	1	1				
2	90119–06M82	BOLT, WITH WASHER BOULON, AVEC RONDELLE	4	4				
3	6AW–85991–00	BRACKET, UNIT SUPPORT COMPLET	1	1				
4	90465–14M66	CLAMP BRIDE	4	4				
5	60V–85564–00	GROMMET RONDELLE CAOUTCHOUC	4	4				
6	90387–06176	COLLAR COLLERETTE	4	4				
7	68F–85119–00	BOLT BOULON	4	4				
8	6AW–8591C–00	CASE, ECU CAISSE, ECU	1	1				
9	97E95–06512	BOLT, HEXAGON W/W DEEP RECESS VIS HEXAGONAL AVC RONDELLE	5	5				
10	90464–18246	CLAMP BRIDE	1	1				
11	90464–16240	CLAMP BRIDE	1	1				
12	90465–13M24	CLAMP BRIDE	1	1				
13	6AW–82544–01	CLAMP COLLIER	1	1				
14	97E95–06512	BOLT, HEXAGON W/W DEEP RECESS VIS HEXAGONAL AVC RONDELLE	1	1				
15	6AW–82588–00	PLATE PLAQUE	1	1				
16	97E95–06512	BOLT, HEXAGON W/W DEEP RECESS VIS HEXAGONAL AVC RONDELLE	4	4				
17	90465–14M66	CLAMP BRIDE	1	1				
18	6AW–83651–00	SENDER, OIL PRESSURE RACCORD, PRESSION D'HUILE	1	1				
19	63P–85886–00	SENSOR, AIR TEMPERATURE SONDE	1	1				
20	63P–14435–00	GROMMET RONDELLE CAOUTCHOUC	1	1				

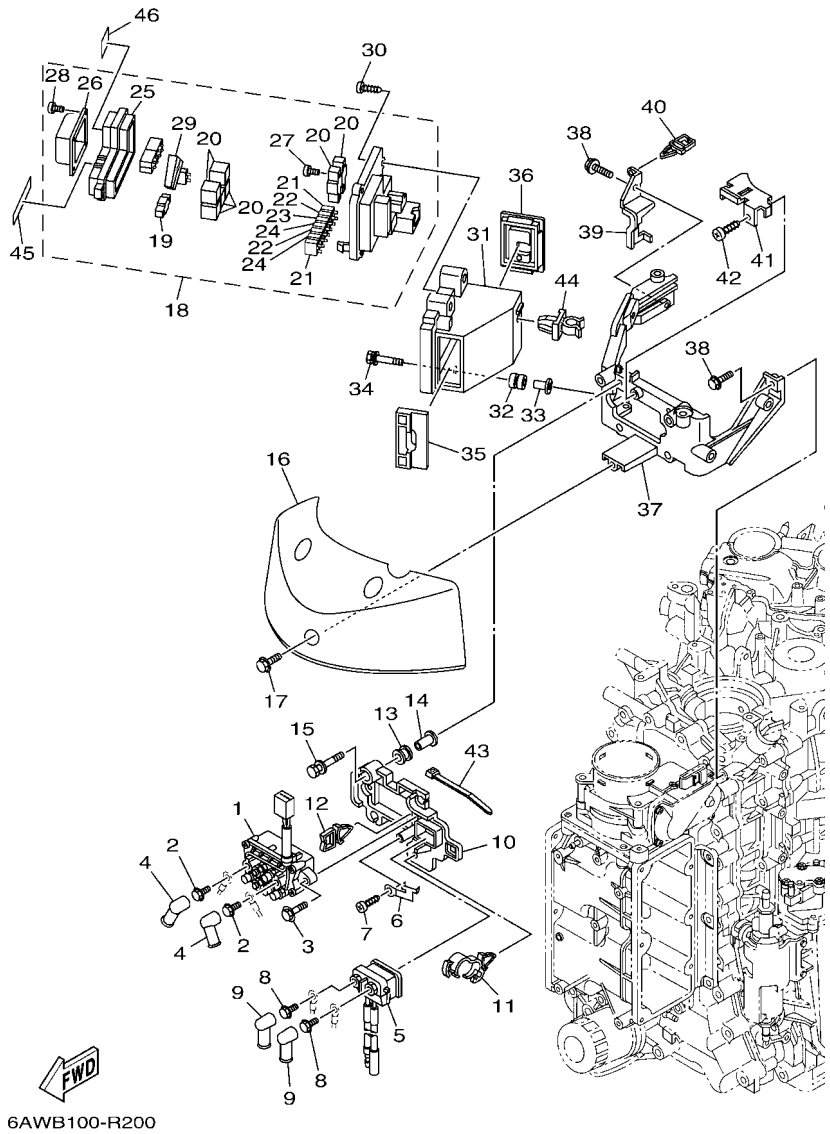

6AWB100-R200

FIG. 20 ELECTRICAL 2 — PARTIE ELECTRIQUE 2

REF. NO.	PART NO. N° PIECES	DESCRIPTION DESCRIPTION	6AWD	6AXD				REMARKS REMARQUES
1	6AW–81950–00	RELAY ASSY RELAIS COMPLET	1	1				
2	97E95–06610	BOLT, HEXAGON W/W DEEP RECESS VIS HEXAGONAL AVC RONDELLE	2	2				
3	97513–06520	BOLT, WITH WASHER VIS HEXAGONAL AVC RONDELLE	2	2				
4	6G5–82119–10	COVER, LEAD WIRE GARNITURE, FIL	2	2				
5	6AW–8194A–00	RELAY RELAIS	1	1				
6	68V–81953–00	STAY, RELAY SUPPORT, RELAIS	1	1				
7	97780–60620	SCREW, TAPPING VIS, TETE BOMBEE	1	1				
8	97E95–06610	BOLT, HEXAGON W/W DEEP RECESS VIS HEXAGONAL AVC RONDELLE	2	2				
9	6G5–82119–00	COVER, LEAD WIRE GARNITURE, FIL	2	2				
10	6AW–81952–00	HOLDER, RELAY SUPPORT, RELAIS	1	1				
11	90464–12183	CLAMP BRIDE	1	1				
12	90464–11121	CLAMP BRIDE	1	1				
13	6A0–82317–00	DAMPER, IGNITION COIL AMORTISSEUR, BOBINE D'ALLUM	4	4				
14	90387–06119	COLLAR COLLERETTE	4	4				
15	90119–06M59	BOLT, WITH WASHER BOULON, AVEC RONDELLE	4	4				
16	6AW–81942–00	COVER COUVERCLE	1	1				
17	95D95–06016	BOLT, FLANGE DEEP RECESS BOULON FIXATION	3	3				
18	6AW–82170–03	FUSE BOX ASSY BOITE A FUSIBLES	1	1				
19	6P2–82151–00	.FUSE (60A) .FUSIBLE (60A)	3	3				
20	6AW–8195A–00	.RELAY ASSY .RELAIS COMPLET	5	5				
21	67F–82151–40	.FUSE (10A) .FUSIBLE (10A)	3	3				
22	67F–82151–50	.FUSE (15A) .FUSIBLE (15A)	3	3				
23	67F–82151–00	.FUSE (20A) .FUSIBLE (20A)	2	2				
24	67F–82151–10	.FUSE (30A) .FUSIBLE (30A)	3	3				
25	6P2–85544–00	.CASE .BOITIER	1	1				
26	6P2–81639–10	.COVER .COUVERCLE	1	1				
27	68F–82846–00	.SCREW, PAN HEAD (M5) .VIS, TETE TRONCONIQUE (M5)	4	4				

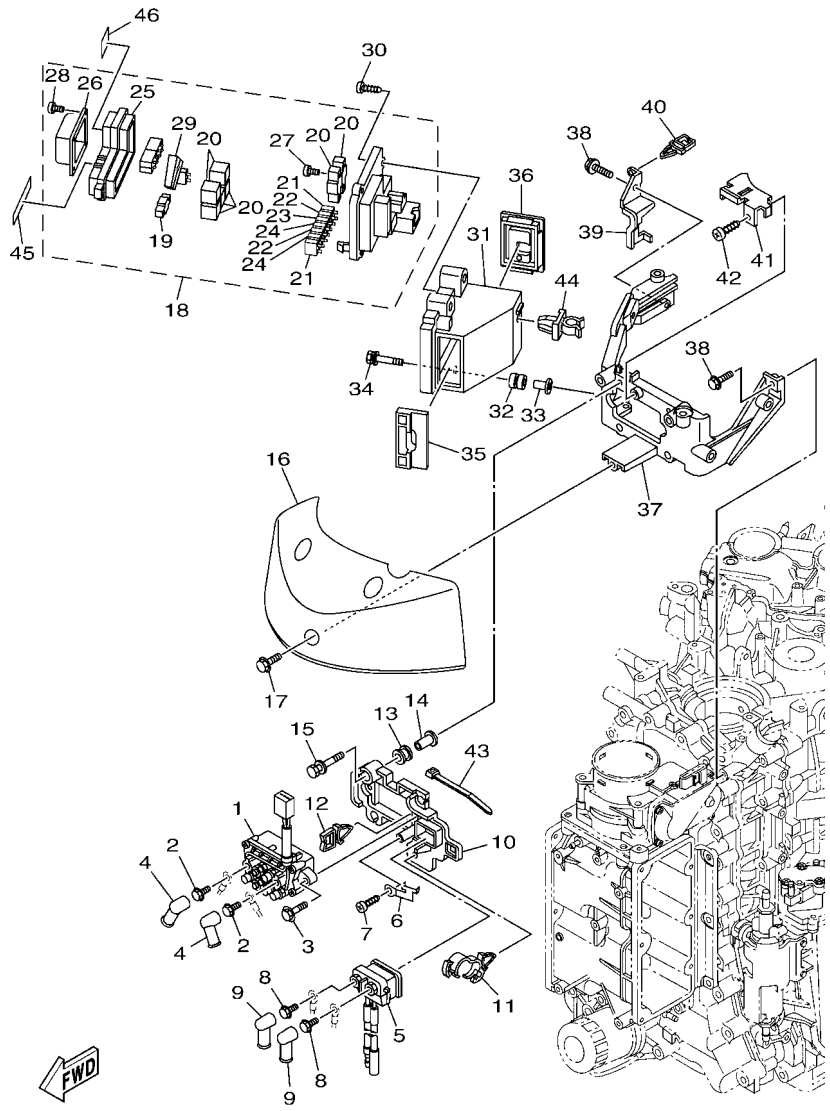

6AWB100-R200

FIG. 20 ELECTRICAL 2 — PARTIE ELECTRIQUE 2

REF. NO.	PART NO. N° PIECES	DESCRIPTION DESCRIPTION	6AWD	6AXD				REMARKS REMARQUES
28	6P2–82113–00	.SCREW (M3) .VIS (M3)	4	4				
29	67F–2812A–00	.PULLER, FUSE .TENDEUR, FUSIBLE	1	1				
30	97780–50620	SCREW, TAPPING VIS, TETE BOMBEE	4	4				
31	6AW–82171–00	STAY, FUSE BOX SUPPORT, BOITE A FUSIBLES	1	1				
32	6A0–82317–00	DAMPER, IGNITION COIL AMORTISSEUR, BOBINE D'ALLUM	3	3				
33	90387–06119	COLLAR COLLERETTE	3	3				
34	90119–06M59	BOLT, WITH WASHER BOULON, AVEC RONDELLE	3	3				
35	6AW–82572–00	GROMMET 1 VIS	1	1				
36	6AW–82573–00	GROMMET 2 PASSE-FIL 2	1	1				
37	6AW–81948–00	BRACKET SUPPORT	1	1				
38	95D95–06020	BOLT, FLANGE DEEP RECESS BOULON FIXATION	4	4				
39	6AW–81678–00	CLAMP 2 BRIDE 2	1	1				
40	90464–11121	CLAMP BRIDE	1	1				
41	6AW–81443–00	CLAMP, LEAD 1 BRIDE, FIL 1	1	1				
42	97780–50514	SCREW, TAPPING VIS, TETE BOMBEE	1	1				
43	90465–11M10	CLAMP BRIDE	2	2				
44	90464–09008	CLAMP BRIDE	1	1				
45	6AW–81919–20	GRAPHIC, REGULATOR ADHESIF, REGULATEUR	1	1				
46	6AW–81919–31	GRAPHIC, REGULATOR ADHESIF, REGULATEUR	1	1				

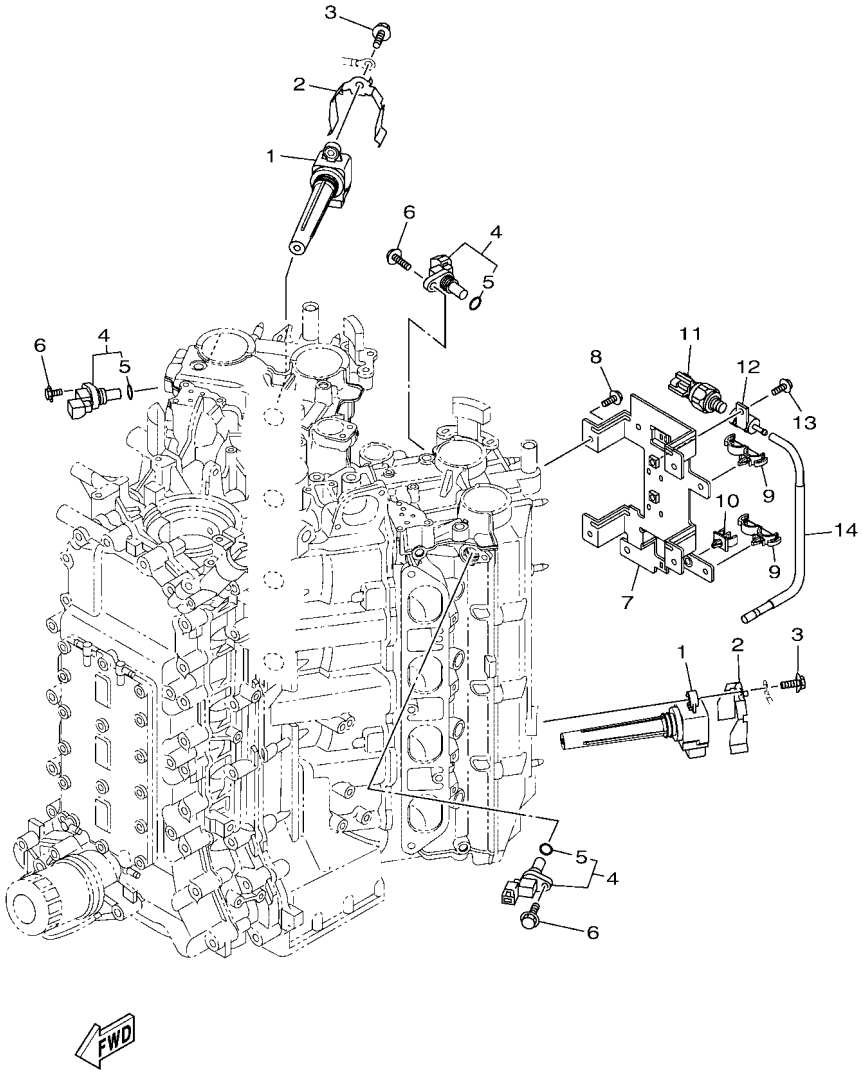

6AWB100-R210

FIG. 21 ELECTRICAL 3 — PARTIE ELECTRIQUE 3

REF. NO.	PART NO. N° PIECES	DESCRIPTION DESCRIPTION	6AWD	6AXD				REMARKS REMARQUES
1	6CB–82310–00	IGNITION COIL ASSY BOBINE D'ALLUMAGE	8	8				
2	6AW–81539–00	PLATE, COIL PLAQUE, BOBINE	8	8				
3	95D95–06025	BOLT, FLANGE DEEP RECESS BOULON FIXATION	8	8				
4	6P2–85896–00	SENSOR, CAM POSITION SONDE DE CAME	3	3				
5	6P2–85075–00	.O-RING .JOINT TORIQUE	1	1				
6	97E95–06520	BOLT, HEXAGON W/W DEEP RECESS VIS HEXAGONAL AVC RONDELLE	3	3				
7	6AW–8366G–10	BRACKET 3 SUPPORT 3	1	1				
8	95D95–06016	BOLT, FLANGE DEEP RECESS BOULON FIXATION	4	4				
9	90464–18246	CLAMP BRIDE	2	2				
10	90464–07009	CLAMP BRIDE	1	1				
11	6AW–8366B–01	SENSOR, WATER PRESSURE SONDE DE PRESSION D'EAU	1	1				
12	60V–8366D–00	ADAPTOR, INPUT CONNECTEUR 3	1	1				
13	97E95–06516	BOLT, HEXAGON W/W DEEP RECESS VIS HEXAGONAL AVC RONDELLE	1	1				
14	6AW–82353–10	HOSE DURITE	1	1				

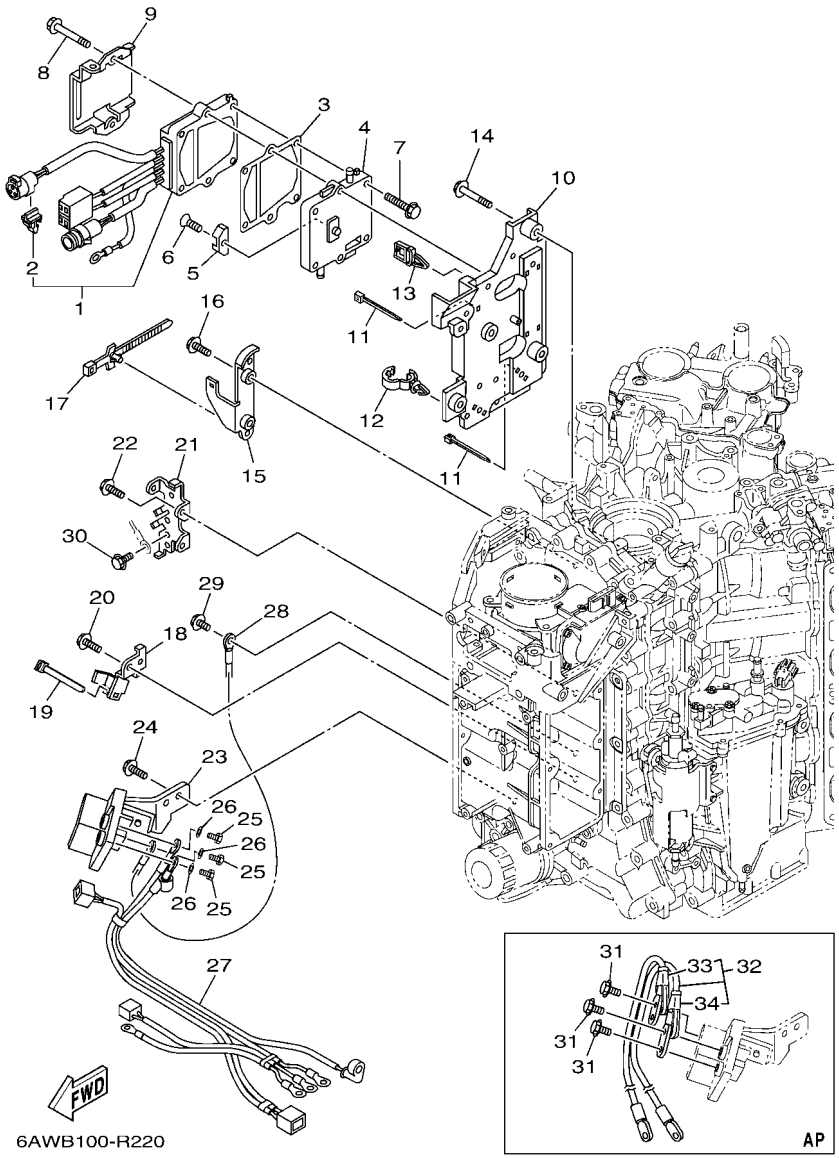

FIG. 22 ELECTRICAL 4 — PARTIE ELECTRIQUE 4

REF. NO.	PART NO. N° PIECES	DESCRIPTION DESCRIPTION	6AWD	6AXD				REMARKS REMARQUES
1	6AW–81960–02	RECTIFIER & REGULATOR ASSY REDRESSEUR REGULATEUR CPLT	1	1				
2	90464–12002	.CLAMP .BRIDE	1	1				
3	6AW–81975–00	PLATE, RECTIFIER FITTING PLAQUE, FIXATION DU REDRESSEUR	1	1				
4	6AW–81972–00–9S	COVER, RECTIFIER COUVERCLE, REDRESSEUR	1	1				
5	6E5–11325–00	ANODE ANODE	1	1				
6	98780–04015	SCREW, FLAT HEAD VIS A TETE FRAISEE	1	1				
7	90119–06MA3	BOLT, WITH WASHER BOULON, AVEC RONDELLE	4	4				
8	90119–06MA5	BOLT, WITH WASHER BOULON, AVEC RONDELLE	2	2				
9	6AW–82581–00	STAY, CORD CLAMP SUPPORT, COLLIER DE CORDON	1	1				
10	6AW–8235A–00	CASE 1 CAISSE 1	1	1				
11	90465–14M66	CLAMP BRIDE	5	5				
12	90464–13249	CLAMP BRIDE	1	1				
13	90464–11121	CLAMP BRIDE	1	1				
14	97E95–06516	BOLT, HEXAGON W/W DEEP RECESS VIS HEXAGONAL AVC RONDELLE	4	4				
15	6AW–83614–01	BRACKET SUPPORT	1	1				
16	97E95–06514	BOLT, HEXAGON W/W DEEP RECESS VIS HEXAGONAL AVC RONDELLE	2	2				
17	90464–44002	CLAMP BRIDE	2	2				
18	6AW–81328–00	CLAMP COLLIER	1	1				
19	90465–14M66	CLAMP BRIDE	1	1				
20	97E95–06516	BOLT, HEXAGON W/W DEEP RECESS VIS HEXAGONAL AVC RONDELLE	1	1				
21	6AW–81218–00	TERMINAL BORNE	1	1				
22	97E95–06516	BOLT, HEXAGON W/W DEEP RECESS VIS HEXAGONAL AVC RONDELLE	2	2				
23	6AW–81925–01	TERMINAL BORNE	1	1				
24	97E95–08520	BOLT, HEXAGON W/W DEEP RECESS VIS HEXAGONAL AVC RONDELLE	2	2				
25	90101–08022	BOLT BOULON	3	3				
26	92990–08600	WASHER, PLATE RONDELLE, PLATE	3	3				
27	6AW–8259M–00	WIRE HARNESS ASSY 2 FAISCEAU DE FILS	1	1				

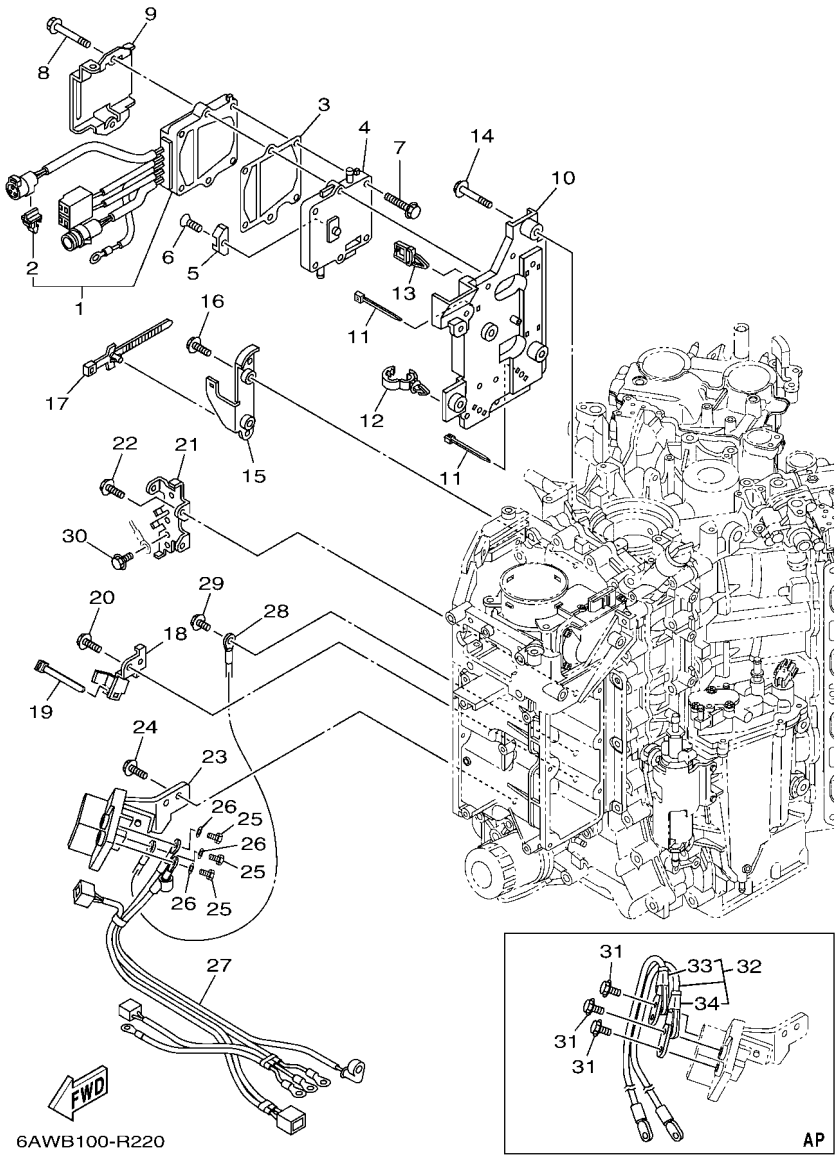

FIG. 22 ELECTRICAL 4 — PARTIE ELECTRIQUE 4

REF. NO.	PART NO. N° PIECES	DESCRIPTION DESCRIPTION	6AWD	6AXD				REMARKS REMARQUES
28	6AW–82117–01	WIRE, LEAD FIL	1	1				
29	97E95–06616	BOLT, HEXAGON W/W DEEP RECESS VIS HEXAGONAL AVC RONDELLE	1	1				
30	97E95–06510	BOLT, HEXAGON W/W DEEP RECESS VIS HEXAGONAL AVC RONDELLE	4	4				
31	97E95–08516	BOLT, HEXAGON W/W DEEP RECESS VIS HEXAGONAL AVC RONDELLE	3	3				AP AP
32	6AW–82105–01	BATTERY CABLE CABLE DE BATTERIE	1	1				AP AP
33	6AW–82119–00	.COVER, LEAD WIRE .GARNITURE, FIL	1	1				
34	6AW–82119–20	.COVER, LEAD WIRE .GARNITURE, FIL	1	1				

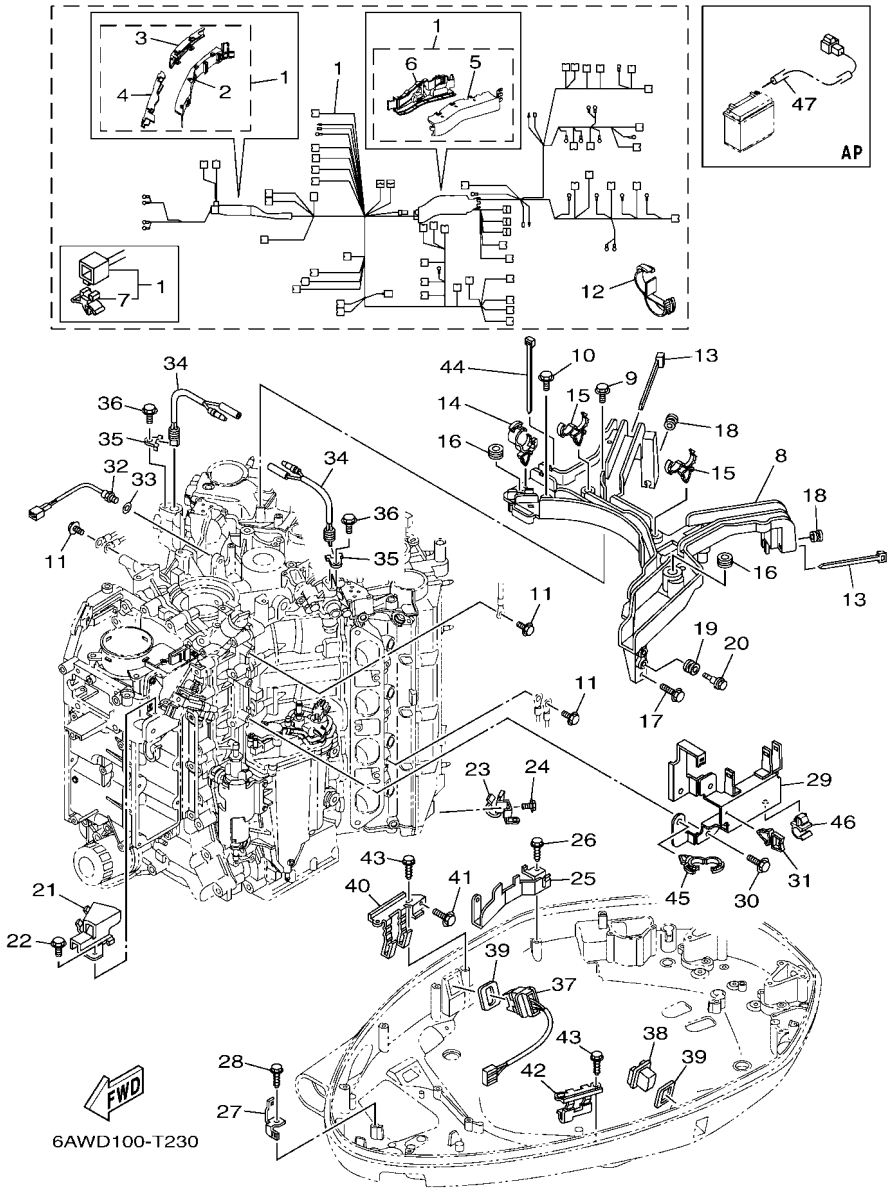

FIG. 23 ELECTRICAL 5 — PARTIE ELECTRIQUE 5

REF. NO.	PART NO. N° PIECES	DESCRIPTION DESCRIPTION	6AWD	6AXD				REMARKS REMARQUES
1	6AW–82590–32	WIRE HARNESS ASSY FAISCEAU DE FILS COMPLET	1	1				
2	6AW–8A7A1–00	.PROTECTOR 1 .PROTECTEUR 1	1	1				
3	6AW–8A7A2–00	.PROTECTOR 2 .PROTECTEUR 2	1	1				
4	6AW–8A7A3–00	.PROTECTOR 3 .PROTECTEUR 3	1	1				
5	6AW–8A7A4–00	.PROTECTOR 4 .PROTECTEUR 4	1	1				
6	6AW–8A7A5–00	.PROTECTOR 5 .PROTECTEUR 5	1	1				
7	90464–09M47	.CLAMP .BRIDE	2	2				
8	6AW–82589–01	PROTECTER, WIRE HARNESS PROTECTEUR, FAISCEAU DE FILS	1	1				
9	97E95–06535	BOLT, HEXAGON W/W DEEP RECESS VIS HEXAGONAL AVC RONDELLE	2	2				
10	97E95–06525	BOLT, HEXAGON W/W DEEP RECESS VIS HEXAGONAL AVC RONDELLE	1	1				
11	97E95–06616	BOLT, HEXAGON W/W DEEP RECESS VIS HEXAGONAL AVC RONDELLE	3	3				
12	90464–25005	CLAMP BRIDE	1	1				
13	90465–13M18	CLAMP BRIDE	2	2				
14	90464–20181	CLAMP BRIDE	1	1				
15	90464–18246	CLAMP BRIDE	2	2				
16	90480–19368	GROMMET PASSE-FIL	2	2				
17	97E95–06512	BOLT, HEXAGON W/W DEEP RECESS VIS HEXAGONAL AVC RONDELLE	1	1				
18	90480–12314	GROMMET PASSE-FIL	2	2				
19	90480–12314	GROMMET PASSE-FIL	2	2				
20	90109–06MA1	BOLT BOULON	2	2				
21	6AW–82388–00	PLATE PLAQUETTE	1	1				
22	97E95–06514	BOLT, HEXAGON W/W DEEP RECESS VIS HEXAGONAL AVC RONDELLE	1	1				
23	6AW–81677–00	CLAMP 1 BRIDE 1	1	1				
24	97E95–06514	BOLT, HEXAGON W/W DEEP RECESS VIS HEXAGONAL AVC RONDELLE	1	1				
25	6AW–8257G–00	CLAMP, CORD COLLIER, CORDON	1	1				
26	90109–06M86	BOLT BOULON	1	1				
27	6AW–42743–00	BRACKET SUPPORT	1	1				

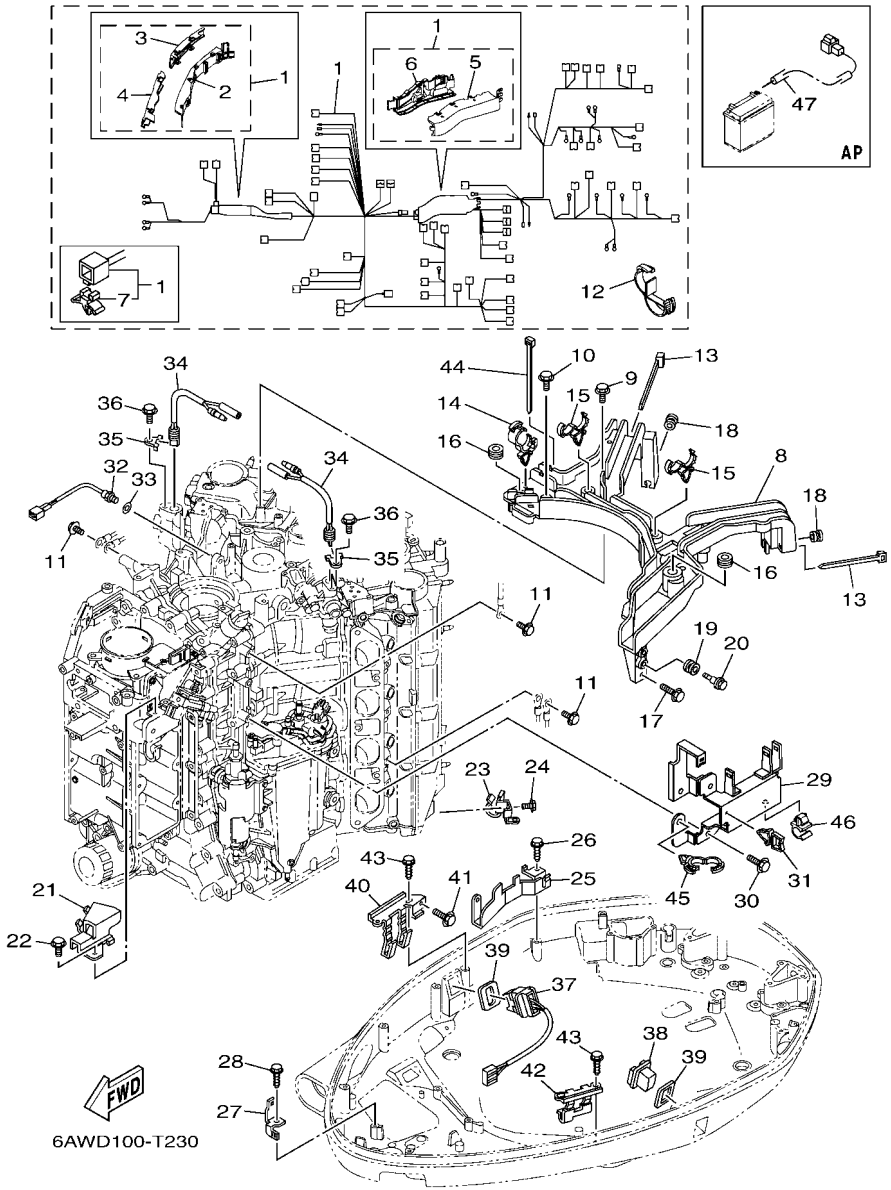

FIG. 23 ELECTRICAL 5 — PARTIE ELECTRIQUE 5

REF. NO.	PART NO. N° PIECES	DESCRIPTION DESCRIPTION	6AWD	6AXD				REMARKS REMARQUES
28	90109–06M86	BOLT BOULON	1	1				
29	6AW–81845–10	PLATE PLAQUE	1	1				
30	97E95–06514	BOLT, HEXAGON W/W DEEP RECESS VIS HEXAGONAL AVC RONDELLE	2	2				
31	90464–11121	CLAMP BRIDE	1	1				
32	61A–85790–00	THERMOSENSOR ASSY SENSITOMETRE	1	1				
33	92990–10600	WASHER, PLATE RONDELLE, PLATE	1	1				
34	6AW–82560–00	THERMO SWITCH ASSY THERMO-CONTACT COMPLET	2	2				
35	6E9–82588–00	PLATE PLAQUE	2	2				
36	97E95–06516	BOLT, HEXAGON W/W DEEP RECESS VIS HEXAGONAL AVC RONDELLE	2	2				
37	6AW–82563–01	TRIM & TILT SWITCH ASSY INCLINER ET PARER COMMUTATEUR	1	1				
38	69J–42723–01	COVER, BOTTOM COUVERCLE	1	1				
39	69J–82587–00	GASKET JOINT	2	2				
40	6AX–83614–00	BRACKET SUPPORT	1	1				
41	97E95–06514	BOLT, HEXAGON W/W DEEP RECESS VIS HEXAGONAL AVC RONDELLE	1	1				
42	63P–83614–01	BRACKET SUPPORT	1	1				
43	90109–06M86	BOLT BOULON	4	4				
44	90465–14M66	CLAMP BRIDE	1	1				
45	90464–20181	CLAMP BRIDE	2	2				
46	90464–08051	CLAMP BRIDE	2	2				
47	69J–81949–02	WIRE, LEAD (ISOLATOR, 3.8M) FIL (ISOLATOR, 3.8M)	1	1				AP AP

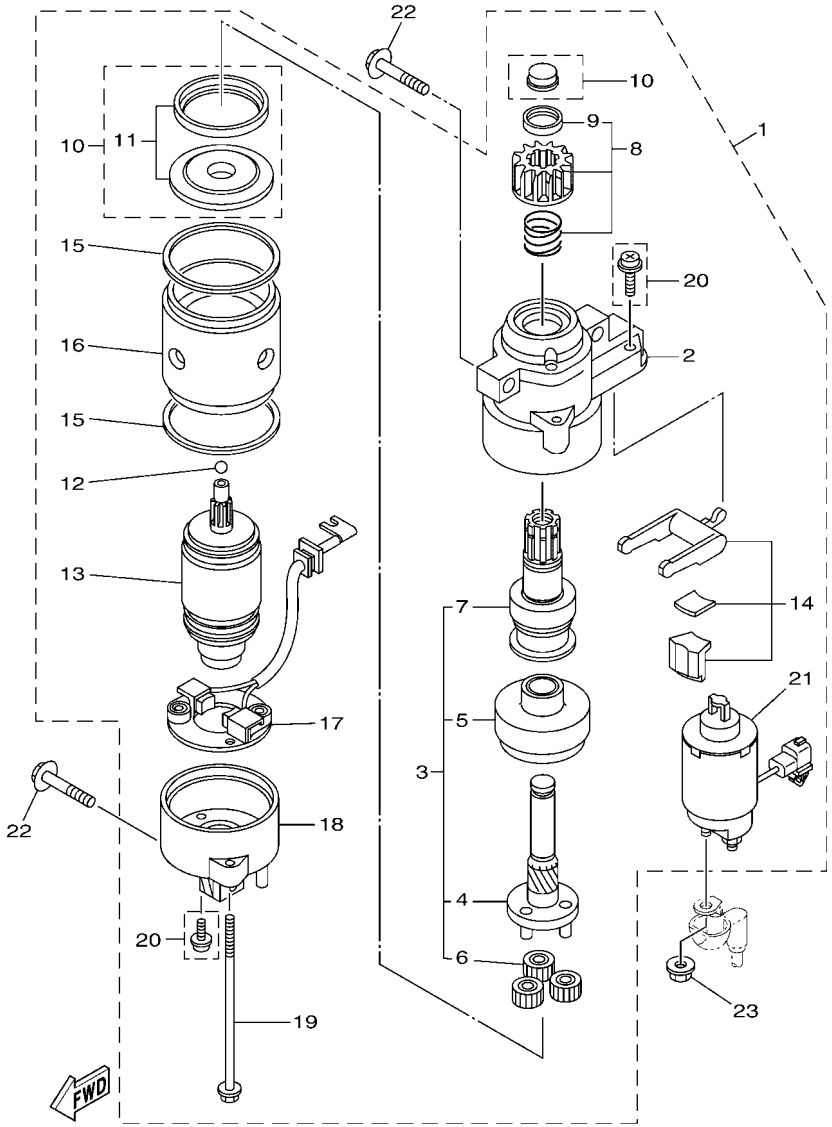

6AWB100-R240

FIG. 24 STARTING MOTOR — DEMARREUR ELECTRIQUE

REF. NO.	PART NO. N° PIECES	DESCRIPTION DESCRIPTION	6AWD	6AXD				REMARKS REMARQUES
1	6AW–81800–00	STARTING MOTOR ASSY DEMARREUR ELECTRIQUE COMPLET	1	1				
2	6AW–81830–00	.FRONT BRACKET ASSY .SUPPORT AVANT	1	1				
3	6AW–81807–00	.GEAR ASSY, STARTING MOTOR .PIGNON, DEMARREUR ELECTRIQUE	1	1				
4	6AW–81836–00	..SHAFT, PINION ..AXE, PIGNON	1	1				
5	6AW–81891–00	..GEAR, RING ..ROUE DENTEE	1	1				
6	6AW–8183T–00	..GEAR, IDLER ..PIGNON, INTERMEDIAIRE	3	3				
7	6AW–81832–00	..CLUTCH, OVER RUN ..EMBRAYAGE, ROUE LIBRE	1	1				
8	6AW–81808–00	.PINION ASSY .PIGNON	1	1				
9	6AW–81857–00	..PINION STOPPER SET ..BUTEE PIGNON	1	1				
10	6AW–81862–00	.CAP .COUVERCLE	1	1				
11	6AW–8183R–00	..PACKING SET ..POCHETTE DE JOINTS	1	1				
12	6AW–81854–00	.BALL, STEEL .BALLE, ACIER	1	1				
13	6AW–81850–00	.ARMATURE ASSY .INDUIT	1	1				
14	6AW–81839–00	.LEVER ASSY .LEVIER COMPLET	1	1				
15	6AW–81842–00	.PACKING .JOINTS	2	2				
16	6AW–81810–00	.STATOR ASSY .STATOR COMPLET	1	1				
17	6AW–81840–00	.BRUSH HOLDER ASSY .SUPPORT DE CHARBON	1	1				
18	6AW–81820–00	.REAR BRACKET ASSY .SUPPORT ARRIERE COMPLET	1	1				
19	6AW–81826–00	.BOLT .BOULON	1	1				
20	6AW–81846–00	.SCREW .VIS	1	1				
21	6AW–81941–00	.STARTER RELAY ASSY .LANCEUR RELAIS (ENS.)	1	1				
22	97513–08545	BOLT, WITH WASHER VIS HEXAGONAL AVC RONDELLE	3	3				
23	90179–08003	NUT ECROU	1	1				

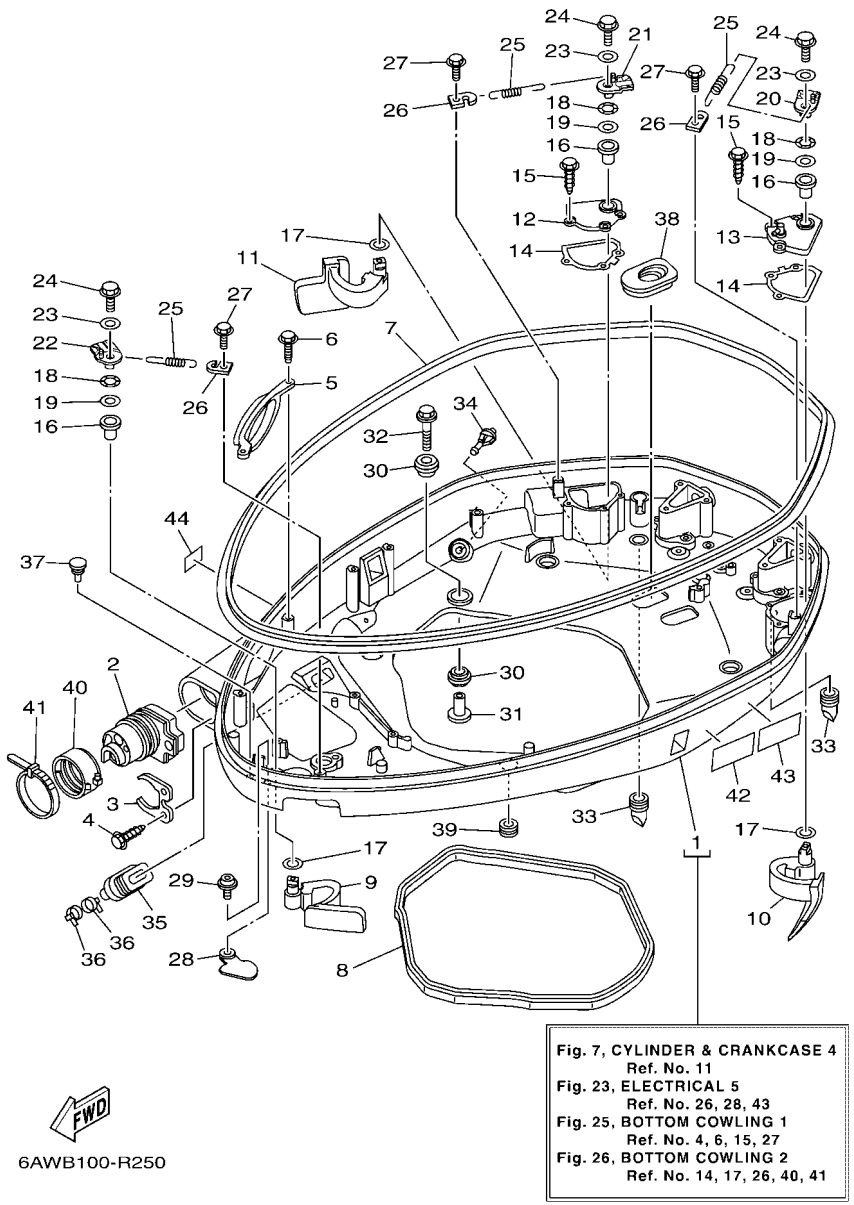

FIG. 25 BOTTOM COWLING 1 — CAPOT INFERIEUR 1

REF. NO.	PART NO. N° PIECES	DESCRIPTION DESCRIPTION	6AWD	6AXD				REMARKS REMARQUES
1	6AW–42710–02–8D	BOTTOM COWLING ASSY ENS. EMBASE	1	1				
2	6AW–42725–01	GROMMET PASSE-FIL	1	1				
3	6AW–42761–00	STOPPER PLAQUETTE	1	1				
4	90109–06M86	BOLT BOULON	2	2				
5	6AW–42735–00	PROTECTOR PROTECTEUR	1	1				
6	90109–06M86	BOLT BOULON	2	2				
7	6AW–42615–00	SEAL JOINT	1	1				
8	63P–42716–00	RUBBER SEAL 1 JOINT EN CAOUTCHOUC 1	1	1				
9	6AW–42815–00–8D	LEVER, CLAMP 1 LEVIER, PRESSE 1	1	1				
10	6AW–42816–01–8D	LEVER, CLAMP 2 LEVIER, PRESSE 2	1	1				
11	6AW–42817–01–8D	LEVER, CLAMP 3 LEVIER, PRESSE 3	1	1				
12	6AW–42828–00–9S	PLATE, CLAMP PLAQUE, PRESSE	1	1				
13	6AW–42829–00–9S	PLATE, CLAMP 2 PLAQUE, PRESSE 2	1	1				
14	6AW–42722–00	GASKET 2 JOINT 2	2	2				
15	90109–06M81	BOLT BOULON	6	6				
16	90381–15002	BUSH, SOLID DOUILLE, SOLIDE	3	3				
17	90202–15M37	WASHER, PLATE RONDELLE, PLATE	3	3				
18	90206–15M18	WASHER, WAVE RONDELLE, ONDULEE	3	3				
19	90201–156J2	WASHER, PLATE RONDELLE, PLATE	3	3				
20	6AW–42818–01	LEVER, CLAMP 4 LEVIER, PRESSE 4	1	1				
21	6AW–42819–01	LEVER, CLAMP 5 LEVIER, PRESSE 5	1	1				
22	6AW–4281A–01	LEVER, CLAMP 6 LEVIER, PRESSE 6	1	1				
23	90201–06M30	WASHER, PLATE RONDELLE, PLATE	3	3				
24	90105–06155	BOLT, FLANGE BOULON, A COLLERETTE	3	3				
25	90506–22001	SPRING, TENSION RESSORT, TENSION	3	3				
26	66T–43144–00	HOOK, SPRING CROCHET	3	3				
27	90109–06M86	BOLT BOULON	3	3				

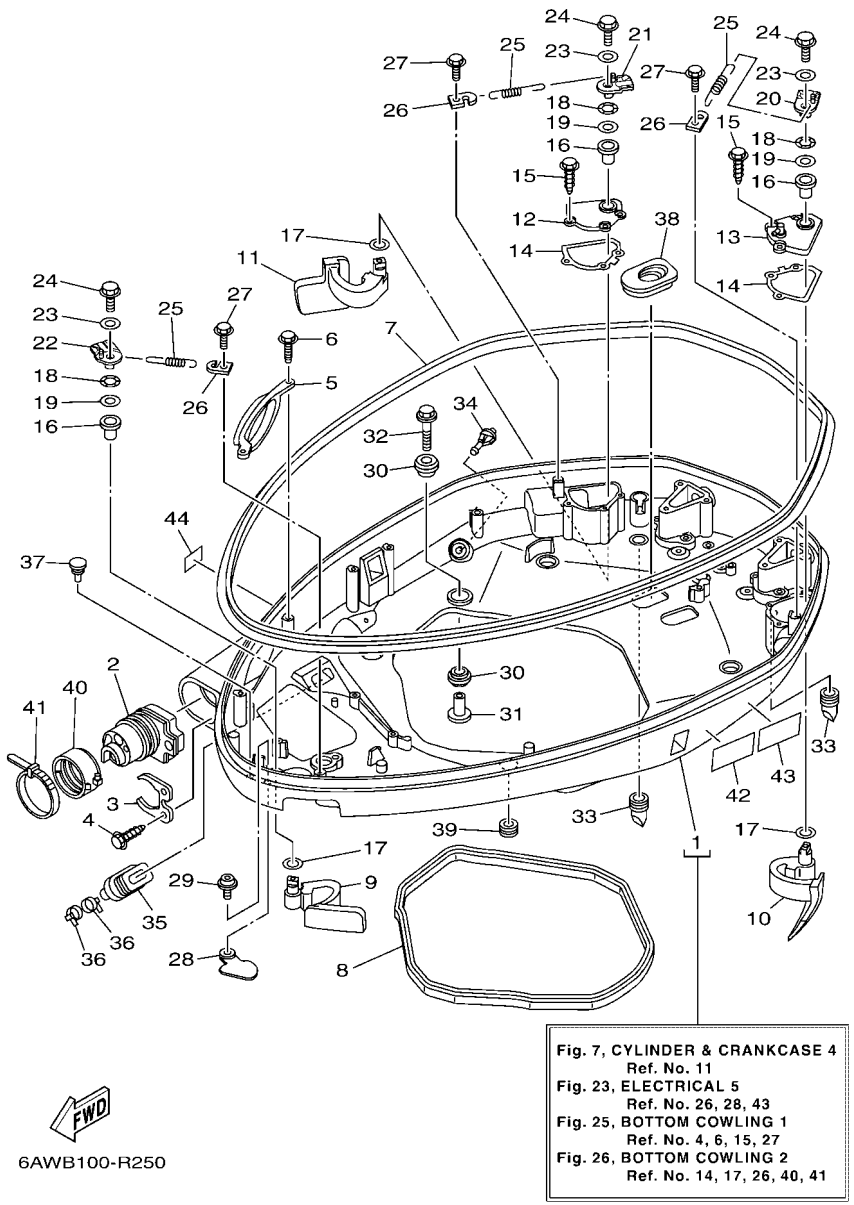

FIG. 25 BOTTOM COWLING 1 — CAPOT INFERIEUR 1

REF. NO.	PART NO. N° PIECES	DESCRIPTION DESCRIPTION	6AWD	6AXD				REMARKS REMARQUES
28	6AW–42851–00	COVER, CLAMP COUVERCLE, BRIDE	1	1				
29	90111–06094	BOLT,HEX. SOCKET BUTTON BOULON	1	1				
30	90480–22M81	GROMMET PASSE-FIL	12	12				
31	90387–08M37	COLLAR COLLERETTE	6	6				
32	90119–08M22	BOLT, WITH WASHER BOULON, AVEC RONDELLE	6	6				
33	61A–42717–00	RUBBER, SEAL 2 JOINT EN CAOUTCHOUC 2	2	2				
34	6P2–44391–00	NIPPLE, HOSE RACCORD D'ESSENCE	1	1				
35	6H1–42726–21	GROMMET PASSE-FIL	1	1				
36	90465–11M10	CLAMP BRIDE	2	2				
37	6H4–42748–00	GROMMET PASSE-FIL	1	1				
38	6AW–42726–00	GROMMET PASSE-FIL	2	2				
39	90480–16007	GROMMET PASSE-FIL	1	1				
40	68F–42753–00	FASTNER ATTACHE	1	1				AP AP
41	90464–20258	CLAMP BRIDE	1	1				AP AP
42	6EE–42794–40	LABEL, WARNING (GENERAL) ETIQUETTE, AVERTISSEMENT	1	1				
43	6EE–42794–50	LABEL, WARNING (GENERAL) ETIQUETTE, AVERTISSEMENT	1	1				
44	6AH–81996–00	MARK MARQUE	1	1				

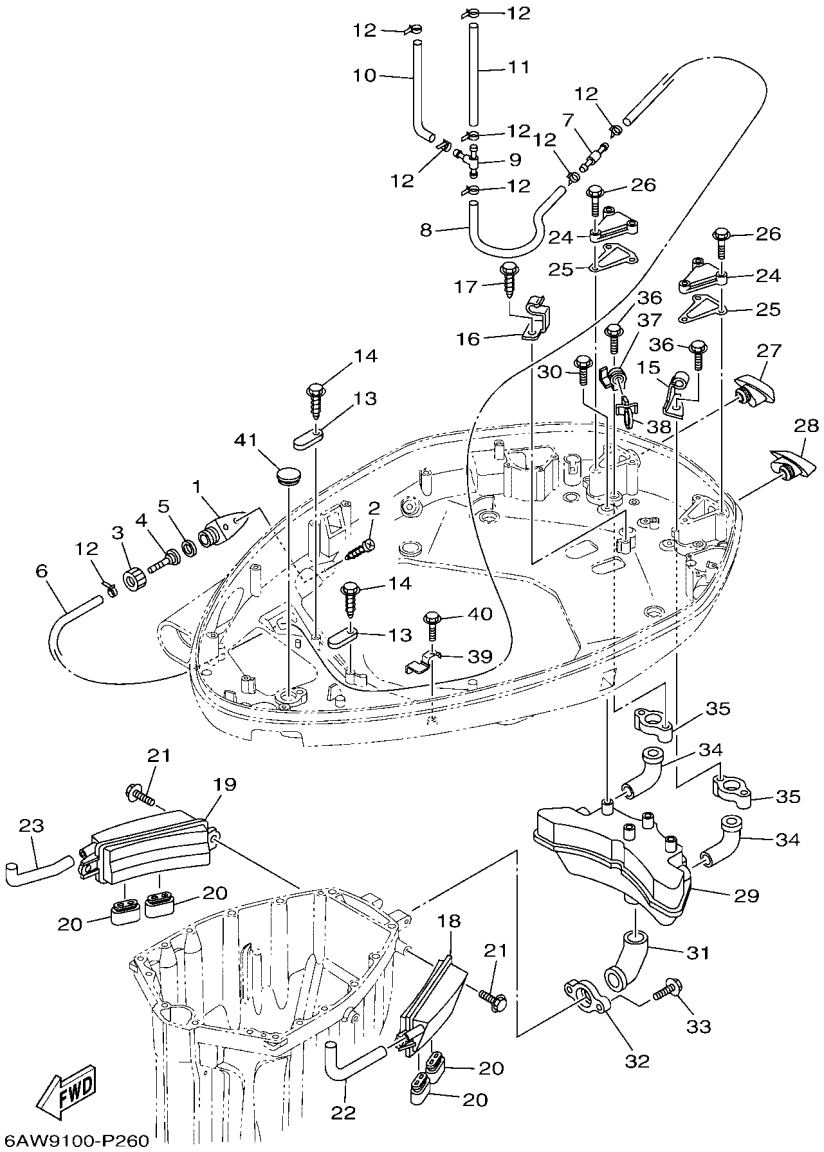

FIG. 26 BOTTOM COWLING 2 — CAPOT INFERIEUR 2

REF. NO.	PART NO. N° PIECES	DESCRIPTION DESCRIPTION	6AWD	6AXD				REMARKS REMARQUES
1	6AW–12572–00	ADAPTER ADAPTATEUR	1	1				
2	97780–60520	SCREW, TAPPING VIS, TETE BOMBEE	2	2				
3	6R3–12581–00	JOINT, HOSE 1 JOINT DE TUYAU	1	1				
4	6AW–12582–00	JOINT, HOSE 2 RACCORD DE TUYAU 1	1	1				
5	6R3–12583–00	GASKET, HOSE JOINT JOINT	1	1				
6	90445–14015	HOSE (L1520) DURITE (L1520)	1	1				
7	6AW–42785–00	PIPE DURITE	1	1				
8	90445–14013	HOSE (L480) DURITE (L480)	1	1				
9	6AW–42169–00	JOINT AXE	1	1				
10	66V–24314–00	PIPE 4 DURITE 4	1	1				
11	90445–116J1	HOSE (L185) DURITE (L185)	1	1				
12	90465–11M10	CLAMP BRIDE	8	8				
13	6E5–82588–00	PLATE PLAQUE	2	2				
14	90109–06M81	BOLT BOULON	2	2				
15	90465–08M82	CLAMP BRIDE	1	1				
16	6AW–42744–00	STAY SUPPORT	1	1				
17	90109–06M86	BOLT BOULON	1	1				
18	6AW–42733–00	BOX, DRAIN BOITIER, VIDANGE	1	1				
19	6AW–42734–00	BOX, DRAIN 2 BOITIER, VIDANGE 2	1	1				
20	69J–42717–00	RUBBER, SEAL 2 JOINT EN CAOUTCHOUC 2	4	4				
21	95D95–06016	BOLT, FLANGE DEEP RECESS BOULON FIXATION	4	4				
22	6AW–42786–00	HOSE, DRAIN 1 DURITE, VIDANGE 1	1	1				
23	6AW–42787–00	HOSE, DRAIN 2 DURITE, VIDANGE 2	1	1				
24	6AW–42723–00–9S	COVER, BOTTOM COUVERCLE	2	2				
25	6AW–42721–00	GASKET 1 JOINT 1	2	2				
26	90109–06M81	BOLT BOULON	6	6				
27	6AW–42769–00	SEAL, RUBBER BOURRELET, CAOUTCHOUC	1	1				

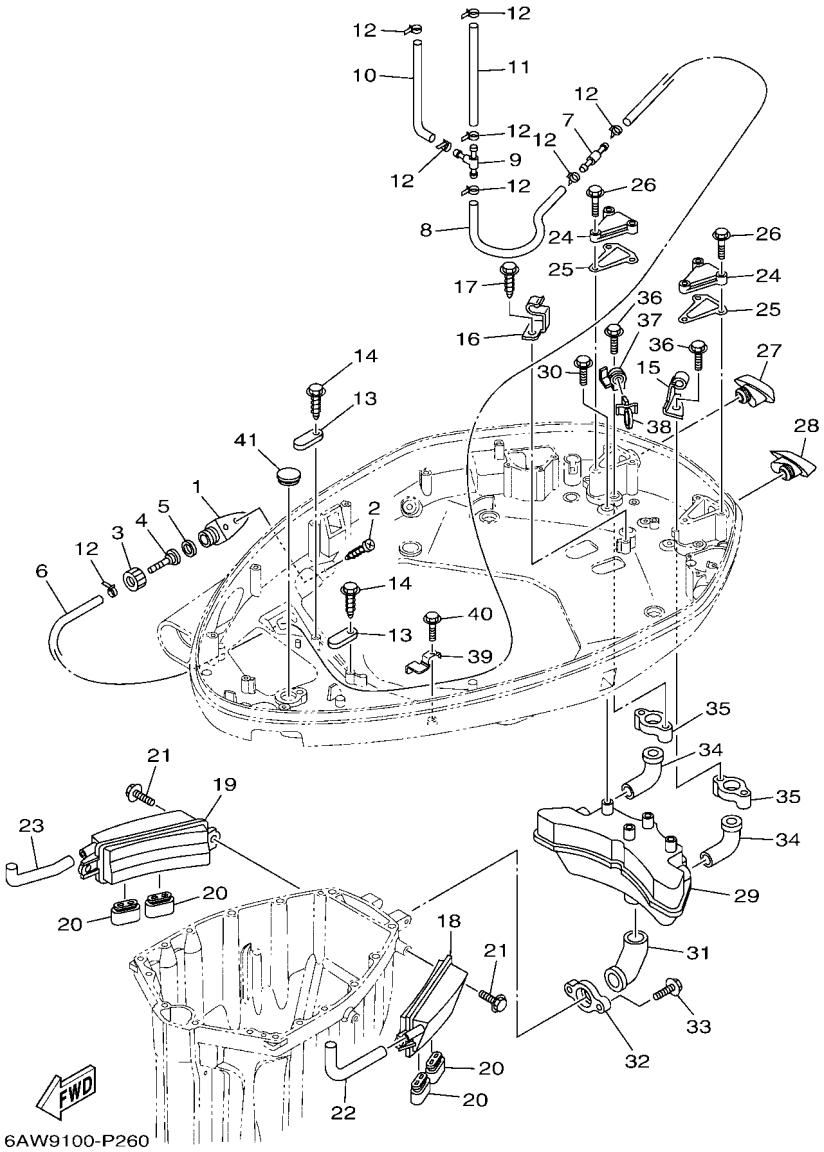

FIG. 26 BOTTOM COWLING 2 — CAPOT INFERIEUR 2

REF. NO.	PART NO. N° PIECES	DESCRIPTION DESCRIPTION	6AWD	6AXD				REMARKS REMARQUES
28	6AW–42629–00	SEAL JOINT	1	1				
29	6AW–14750–00	SILENCER ASSY SILENCIEUX	1	1				
30	95D95–06016	BOLT, FLANGE DEEP RECESS BOULON FIXATION	4	4				
31	6AW–1475E–00	PIPE 2 DURITE	1	1				
32	6AW–14763–00	SPACER ENTRETOISE	1	1				
33	95D75–06025	BOLT, FLANGE DEEP RECESS BOULON FIXATION	2	2				
34	6AW–1475F–00	PIPE 3 DURITE 3	2	2				
35	6AW–14764–00–CA	SPACER ENTRETOISE	2	2				
36	95D95–06016	BOLT, FLANGE DEEP RECESS BOULON FIXATION	4	4				
37	6AW–8339X–00	CLAMP, CORD COLLIER, CORDON	1	1				
38	90464–12001	CLAMP BRIDE	1	1				
39	6AW–42767–00	BRACKET SUPPORT	1	1				
40	90109–06M86	BOLT BOULON	1	1				
41	90338–30256	PLUG PLOT	1	1				

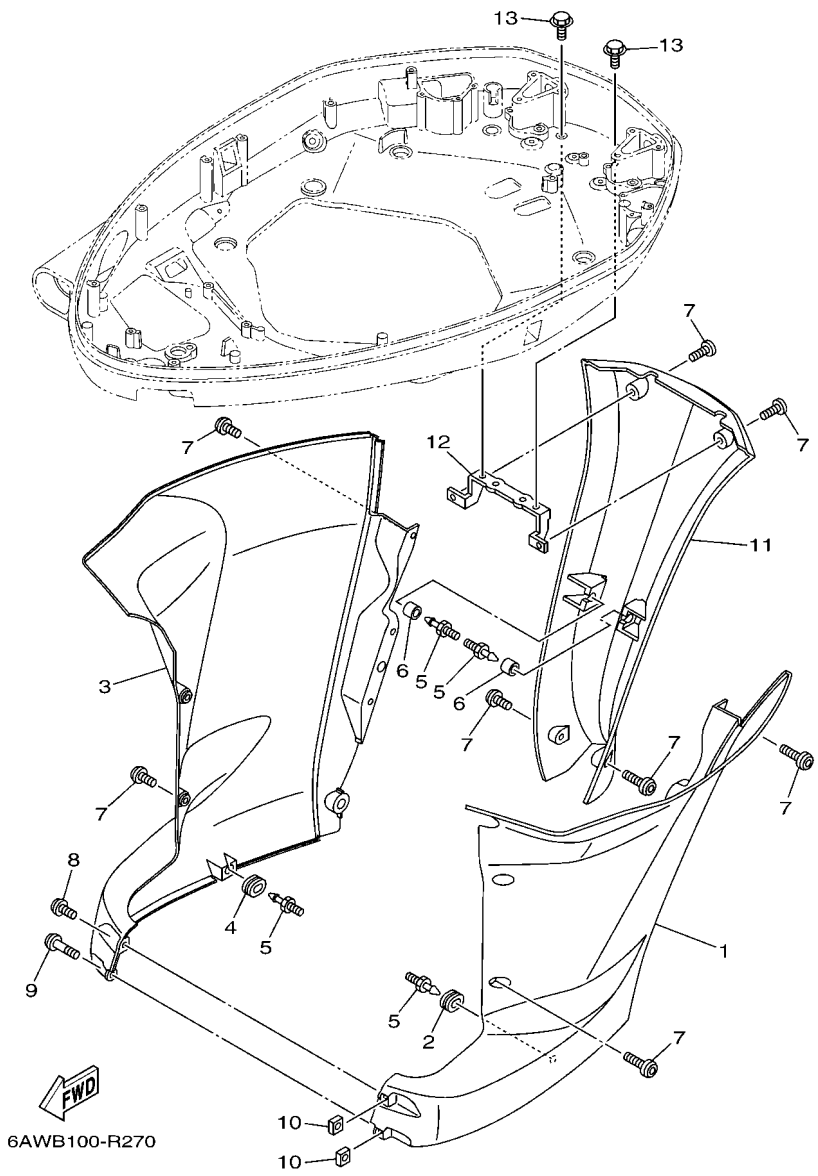

FIG. 27 BOTTOM COWLING 3 — CAPOT INFERIEUR 3

REF. NO.	PART NO. N° PIECES	DESCRIPTION DESCRIPTION	6AWD	6AXD				REMARKS REMARQUES
1	6AW–42741–00–8D	APRON CAPOT LATERAL	1	1				
2	90480–14M17	GROMMET PASSE-FIL	1	1				
3	6AW–42771–00–8D	APRON CAPOT LATERAL	1	1				
4	90480–14M17	GROMMET PASSE-FIL	1	1				
5	69J–42774–10	STAY, APRON 1 COUSSINET	4	4				
6	90386–07001	BUSH DOUILLE	2	2				
7	90111–06144	BOLT,HEX. SOCKET BUTTON BOULON	14	14				
8	90111–06144	BOLT,HEX. SOCKET BUTTON BOULON	1	1				
9	90111–06142	BOLT,HEX. SOCKET BUTTON BOULON	1	1				
10	90173–06001	NUT, SQUARE ECROU, CARRE	2	2				
11	6AW–45151–01–8D	COVER, UPPER CASING CAPUCHON, FOURREAU	1	1				
12	6AW–42775–00	STAY, APRON 2 COUSSINET	1	1				
13	97E95–06514	BOLT, HEXAGON W/W DEEP RECESS VIS HEXAGONAL AVC RONDELLE	2	2				

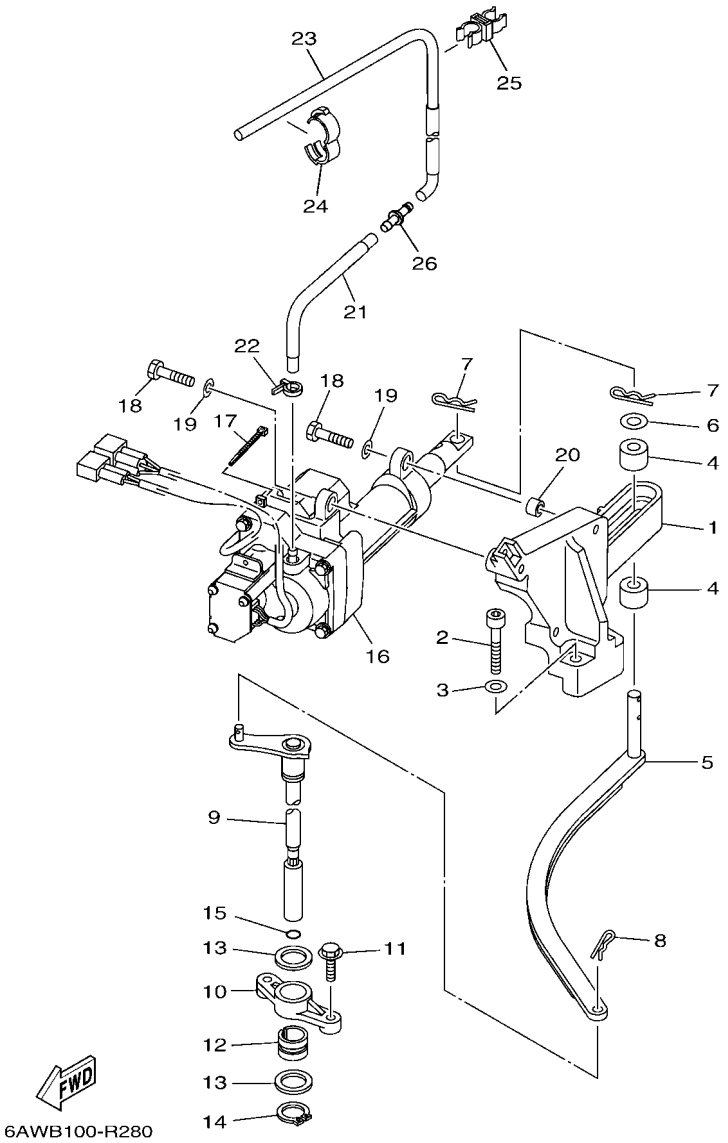

FIG. 28 CONTROL — COMMANDE

REF. NO.	PART NO. N° PIECES	DESCRIPTION DESCRIPTION	6AWD	6AXD				REMARKS REMARQUES
1	6AW–44176–00	BRACKET SUPPORT	1	1				
2	90110–08085	BOLT, HEXAGON SOCKET HEAD BOULON, TETE HEXAGONALE CREUSE	2	2				
3	92990–08600	WASHER, PLATE RONDELLE, PLATE	2	2				
4	6AW–44122–00	BUSHING, SHIFT ROD LEVER DOUILLE, LEVIER D'EMBRAYAGE	2	2				
5	6AW–44121–00	LEVER, SHIFT ROD LEVIER, TIGE D'INVERSION	1	1				
6	90201–11008	WASHER, PLATE RONDELLE, PLATE	1	1				
7	90468–180A0	CLIP JONC	2	2				
8	90468–18008	CLIP JONC	1	1				
9	6AW–44120–01	HANDLE GEAR SHIFT ASSY LEVIER D'EMBRAYAGE	1	1				
10	6AW–44118–01	BRACKET SUPPORT	1	1				
11	97E95–06525	BOLT, HEXAGON W/W DEEP RECESS VIS HEXAGONAL AVC RONDELLE	2	2				
12	90380–19001	BUSH, SOLID DOUILLE, SOLIDE	1	1				
13	90202–19001	WASHER, PLATE RONDELLE, PLATE	2	2				
14	93410–19088	CIRCLIP CIRCLIP	1	1				
15	93210–09165	O-RING JOINT TORIQUE	1	1				
16	6AW–4820A–11	ACTUATOR UNIT ACTUATOR UNIT	1	1				
17	90465–11M10	CLAMP BRIDE	1	1				
18	97080–08030	BOLT BOULON	4	4				
19	92900–08600	WASHER RONDELLE	4	4				
20	90387–08M31	COLLAR COLLERETTE	2	2				
21	6AW–24314–10	PIPE 4 DURITE 4	1	1				
22	90465–11M10	CLAMP BRIDE	1	1				
23	6AW–24314–00	PIPE 4 DURITE 4	1	1				
24	90464–16001	CLAMP BRIDE	1	1				
25	90464–10M59	CLAMP BRIDE	1	1				
26	6G8–24376–00	PIPE, JOINT 1 DURITE 1, RACCORDEMENT	1	1				

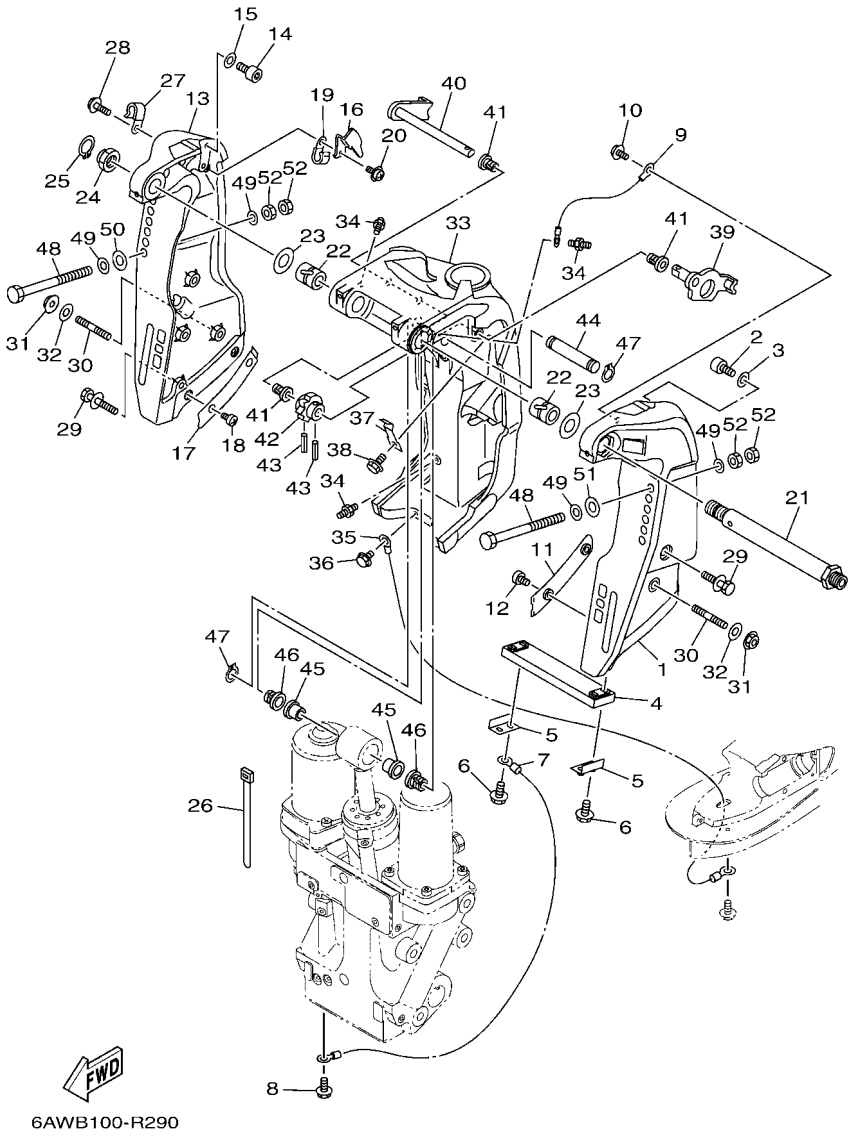

FIG. 29 BRACKET 1 SUPPORT 1

REF. NO.	PART NO. N° PIECES	DESCRIPTION DESCRIPTION	6AWD	6AXD				REMARKS REMARQUES
1	6AW–43111–00–8D	BRACKET, CLAMP 1 PRESSE 1	1	1				
2	91314–10020	BOLT, HEXAGON SOCKET HEAD BOULON, TETE HEXAGONALE CREUSE	1	1				
3	90201–10049	WASHER, PLATE RONDELLE, PLATE	1	1				
4	6AW–45251–00	ANODE ANODE	1	1				
5	6G5–44526–00	PLATE PLAQUE	2	2				
6	97E95–06530	BOLT, HEXAGON W/W DEEP RECESS VIS HEXAGONAL AVC RONDELLE	4	4				
7	6H1–82148–00	WIRE, LEAD 4 FIL 4	1	1				
8	97E95–06510	BOLT, HEXAGON W/W DEEP RECESS VIS HEXAGONAL AVC RONDELLE	1	1				
9	6H1–82148–00	WIRE, LEAD 4 FIL 4	1	1				
10	97985–06212	SCREW, WITH WASHER VIS, AVEC RONDELLE	1	1				
11	61A–43132–00	WASHER, FRICTION RONDELLE, FRICTION	1	1				
12	97885–06010	SCREW, PAN HEAD VIS, A ENCOCHE	2	2				
13	6AW–43112–00–8D	BRACKET, CLAMP 2 PRESSE 2	1	1				
14	91314–10020	BOLT, HEXAGON SOCKET HEAD BOULON, TETE HEXAGONALE CREUSE	1	1				
15	90201–10049	WASHER, PLATE RONDELLE, PLATE	1	1				
16	6AW–43113–00	PLATE, CLAMP BRACKET PLAQUETTE, PRESSE	1	1				
17	61A–43133–00	WASHER,FRICTION RONDELLE	1	1				
18	97885–06010	SCREW, PAN HEAD VIS, A ENCOCHE	2	2				
19	90465–08M83	CLAMP BRIDE	1	1				
20	97985–06212	SCREW, WITH WASHER VIS, AVEC RONDELLE	1	1				
21	6R3–43131–10	BOLT, CLAMP BRACKET BOULON, PRESSE	1	1				
22	90386–25003	BUSH DOUILLE	2	2				
23	90201–26014	WASHER, PLATE RONDELLE, PLATE	2	2				
24	90185–22007	NUT, SELF-LOCKING ECROU,AUTO-BLOQUANT	1	1				
25	93410–21089	CIRCLIP CIRCLIP	1	1				
26	90465–11M10	CLAMP BRIDE	3	3				
27	90465–08M83	CLAMP BRIDE	1	1				

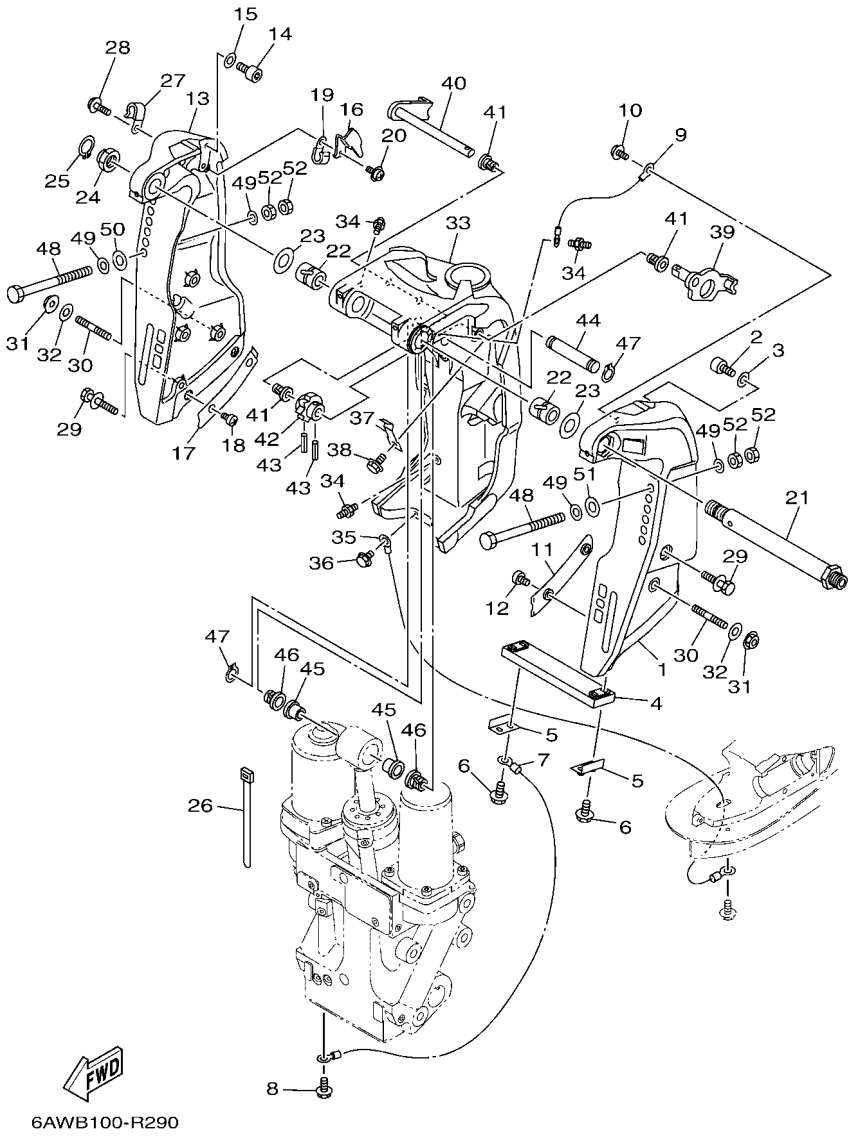

FIG. 29 BRACKET 1 — SUPPORT 1

REF. NO.	PART NO. N° PIECES	DESCRIPTION DESCRIPTION	6AWD	6AXD				REMARKS REMARQUES
28	97E95–06514	BOLT, HEXAGON W/W DEEP RECESS VIS HEXAGONAL AVC RONDELLE	1	1				
29	90119–10039	BOLT, WITH WASHER BOULON, AVEC RONDELLE	6	6				
30	90116–10047	BOLT, STUD GOUJON	2	2				
31	95780–10300	NUT, FLANGE ECROU	2	2				
32	90201–10048	WASHER, PLATE RONDELLE, PLATE	2	2				
33	6AW–43311–00–8D	BRACKET, SWIVEL 1 SUPPORT, PIVOT 1	1	1				
34	93700–06002	NIPPLE, GREASE PION	3	3				
35	6E5–82147–00	WIRE, LEAD 5 FIL 5	1	1				
36	97E95–06510	BOLT, HEXAGON W/W DEEP RECESS VIS HEXAGONAL AVC RONDELLE	1	1				
37	6AW–44116–00	SPRING RESSORT	1	1				
38	97E95–06510	BOLT, HEXAGON W/W DEEP RECESS VIS HEXAGONAL AVC RONDELLE	1	1				
39	6AW–43181–01	LEVER, TILT STOP 1 LEVIER VERROUILLAGE RELEVAGE 1	1	1				
40	6AW–43185–01	LEVER, TILT STOP 2 LEVIER VERROUILLAGE RELEVAGE 2	1	1				
41	90386–10M16	BUSH DOUILLE	3	3				
42	6AW–43148–00	COLLAR, DISTANCE ENTRETOISE	1	1				
43	91690–30020	PIN, SPRING AGRAFFE	2	2				
44	6AW–43126–01	PIN, UPPER SHOCK MOUNT AXE, SUPERIEUR AMORTISSEUR	1	1				
45	90386–18M63	BUSH DOUILLE	2	2				
46	90386–18M14	BUSH DOUILLE	2	2				
47	93410–18M05	CIRCLIP CIRCLIP	2	2				
48	90101–12031	BOLT (150MM) BOULON (150MM)	6	6				
49	90201–12060	WASHER, PLATE RONDELLE, PLATE	12	12				
50	90201–12426	WASHER, PLATE RONDELLE, PLATE	2	2				
51	90201–13M19	WASHER, PLATE RONDELLE, PLATE	4	4				
52	95380–12600	NUT ECROU	12	12				

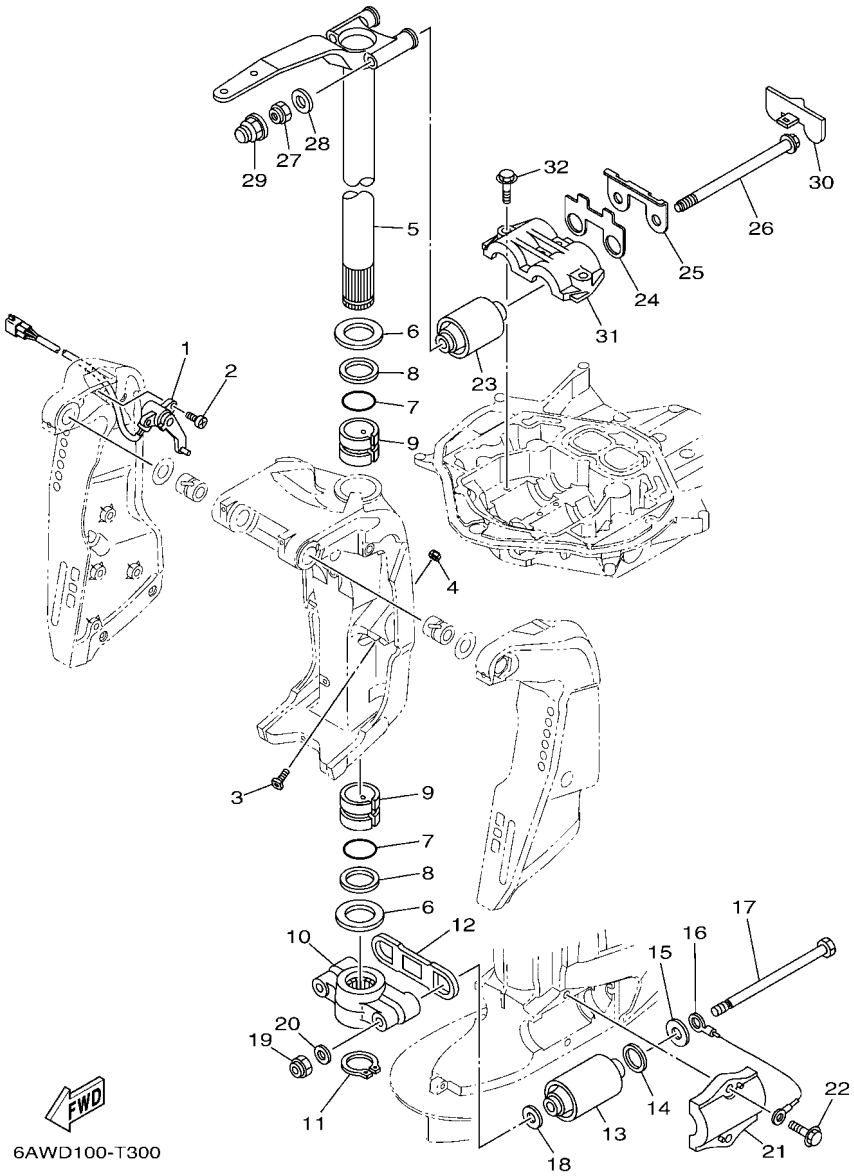

FIG. 30 BRACKET 2 — SUPPORT 2

REF. NO.	PART NO. N° PIECES	DESCRIPTION DESCRIPTION	6AWD	6AXD				REMARKS REMARQUES
1	6AW–83672–00	TRIM SENDER INCLINER RACCORD	1	1				
2	97885–06016	SCREW, PAN HEAD VIS, A ENCOCHE	2	2				
3	6AW–43376–00	BOLT, THRUST RECEIVER BOULON	2	2				
4	95780–10300	NUT, FLANGE ECROU	2	2				
5	6AW–42510–01–8D	STEERING BRACKET ASSY DIRECTION SUPPORT (ENS.)	1	1				
6	90201–46008	WASHER, PLATE RONDELLE, PLATE	2	2				
7	93210–43001	O-RING JOINT TORIQUE	2	2				
8	90202–45001	WASHER, PLATE RONDELLE, PLATE	2	2				
9	90386–45002	BUSH DOUILLE	2	2				
10	6AW–44551–00–CA	HOUSING, LOWER MOUNT RUBBER 1 BOITIER, SILENT-BLOC INFERIEUR	1	1				
11	93410–44087	CIRCLIP CIRCLIP	1	1				
12	6AW–44575–00	DAMPER, LOWER MOUNT RUBBER SILENT-BLOC, INFERIEUR	1	1				
13	6AW–44555–00	MOUNT DAMPER, LOWER SIDE SILENT-BLOC, INFERIEUR LATERAL	2	2				
14	90202–32M19	WASHER, PLATE RONDELLE, PLATE	2	2				
15	90201–16016	WASHER, PLATE RONDELLE, PLATE	2	2				
16	6AW–82149–00	WIRE, LEAD 3 FIL 3	1	1				
17	90101–14004	BOLT BOULON	2	2				
18	90201–15M58	WASHER, PLATE RONDELLE, PLATE	2	2				
19	90185–14M00	NUT, SELF-LOCKING ECROU,AUTO-BLOQUANT	2	2				
20	92995–14600	WASHER RONDELLE	2	2				
21	6AW–44552–00–CA	HOUSING, LOWER MOUNT RUBBER 2 BOITIER, SILENT-BLOC INFERIEUR	2	2				
22	90119–10024	BOLT, WITH WASHER BOULON, AVEC RONDELLE	4	4				
23	6AW–44514–01	MOUNT DAMPER, UPPER SIDE SILENT-BLOC, SUPERIEUR LATERAL	2	2				
24	6AW–44532–00	STOPPER, UPPER MOUNT PLAQUETTE	1	1				
25	6AW–44526–00	PLATE PLAQUE	1	1				
26	90105–16003	BOLT, FLANGE BOULON, A COLLERETTE	2	2				
27	90185–16008	NUT, SELF-LOCKING ECROU,AUTO-BLOQUANT	2	2				

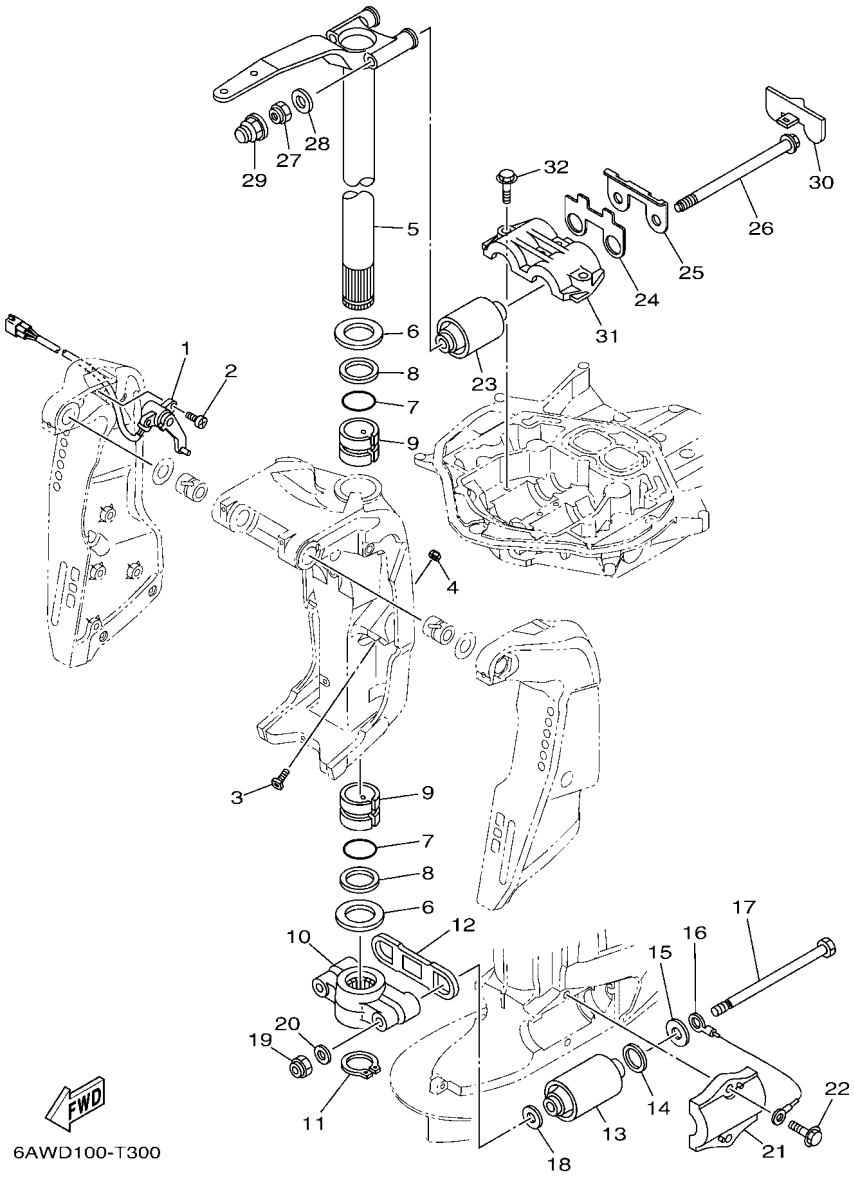

FIG. 30 BRACKET 2 — SUPPORT 2

REF. NO.	PART NO. N° PIECES	DESCRIPTION DESCRIPTION	6AWD	6AXD				REMARKS REMARQUES
28	90201–16030	WASHER, PLATE RONDELLE, PLATE	2	2				
29	6AW–44194–00	CAP CAPUCHON	2	2				
30	6AW–44533–00	DAMPER, UPPER MOUNT RUBBER COUVERCLE, SUSPENSION INFERIEU	1	1				
31	6AW–44511–01–CA	COVER, UPPER MOUNT COUVERCLE, SUSPENSION SUPERIEU	1	1				
32	90119–10024	BOLT, WITH WASHER BOULON, AVEC RONDELLE	4	4				

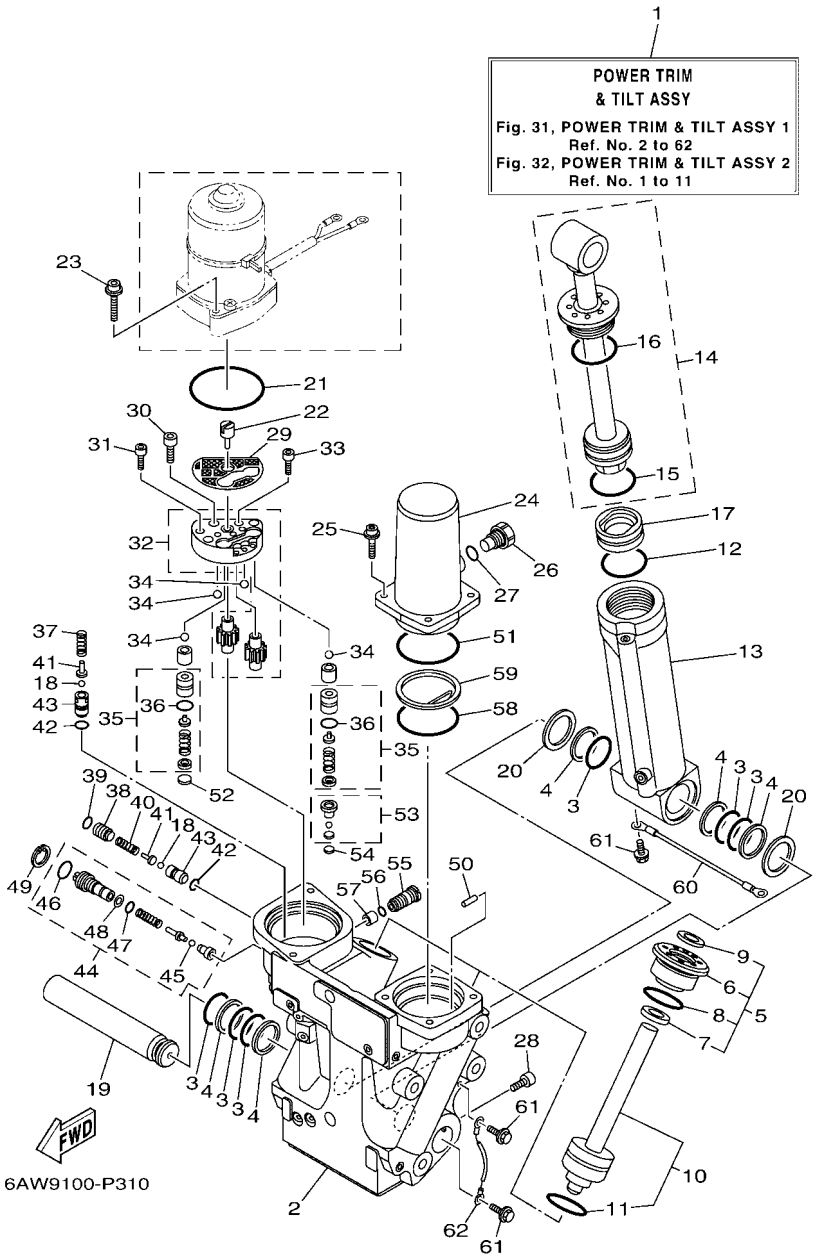

FIG. 31 POWER TRIM & TILT ASSY 1 — PUISSANCE PARER ET INCLINER 1

REF. NO.	PART NO. N° PIECES	DESCRIPTION DESCRIPTION	6AWD	6AXD				REMARKS REMARQUES
1	6AW–43800–05	POWER TRIM & TILT ASSY PUISSANCE PARER ET INCLINER (E	1	1				
2	6AW–43825–03	HOUSING, TRIM & TILT CARTER	1	1				
3	6AW–4389H–00	O-RING JOINT TORIQUE	6	6				
4	6AW–43871–00	RING, BACK UP SEGMENT	5	5				
5	6AW–4380R–01	CYLINDER END SUB ASSY CYLINDRE RACCORD (ENS.)	2	2				
6	6AW–43821–01	.SCREW, TRIM CYLINDER END .VIS	1	1				
7	6AW–4384J–00	.SEAL, TRIM DOWN .JOINT	1	1				
8	6E5–43862–00	.O-RING .JOINT TORIQUE	1	1				
9	6AW–43822–00	.SEAL, TRIM DUST .JOINT	1	1				
10	6AW–43820–01	TRIM PISTON SUB ASSY PARER PISTON AUXILIAIRE (ENS.)	2	2				
11	6G5–43864–00	.O-RING .JOINT TORIQUE	1	1				
12	6E5–43862–00	O-RING JOINT TORIQUE	1	1				
13	6AW–43813–00	CYLINDER, TILT CYLINDRE	1	1				
14	6AW–43810–01	TILT PISTON SUB ASSY INCLINER PISTON AUXILIAIRE(ENS	1	1				
15	6E5–43862–00	.O-RING .JOINT TORIQUE	1	1				
16	64E–43866–00	.O-RING .JOINT TORIQUE	1	1				
17	6AW–43814–00	PISTON, FREE PISTON	1	1				
18	64E–43858–00	BALL BILLE	2	2				
19	6AW–4381A–01	SHAFT AXE	1	1				
20	6AW–4387G–00	WASHER RONDELLE	2	2				
21	64E–43868–00	O-RING JOINT TORIQUE	1	1				
22	64E–43831–00	CONNECTOR, SHAFT RACCORD	1	1				
23	6AW–43879–00	SCREW, WITH WASHER VIS, AVEC RONDELLE	2	2				
24	6AW–43828–00	BODY, RESERVOIR CORPS	1	1				
25	6AW–43887–00	BOLT BOULON	4	4				
26	6AW–43829–00	PLUG, RESERVOIR BOUCHON	1	1				
27	6AW–43897–00	O-RING JOINT TORIQUE	1	1				

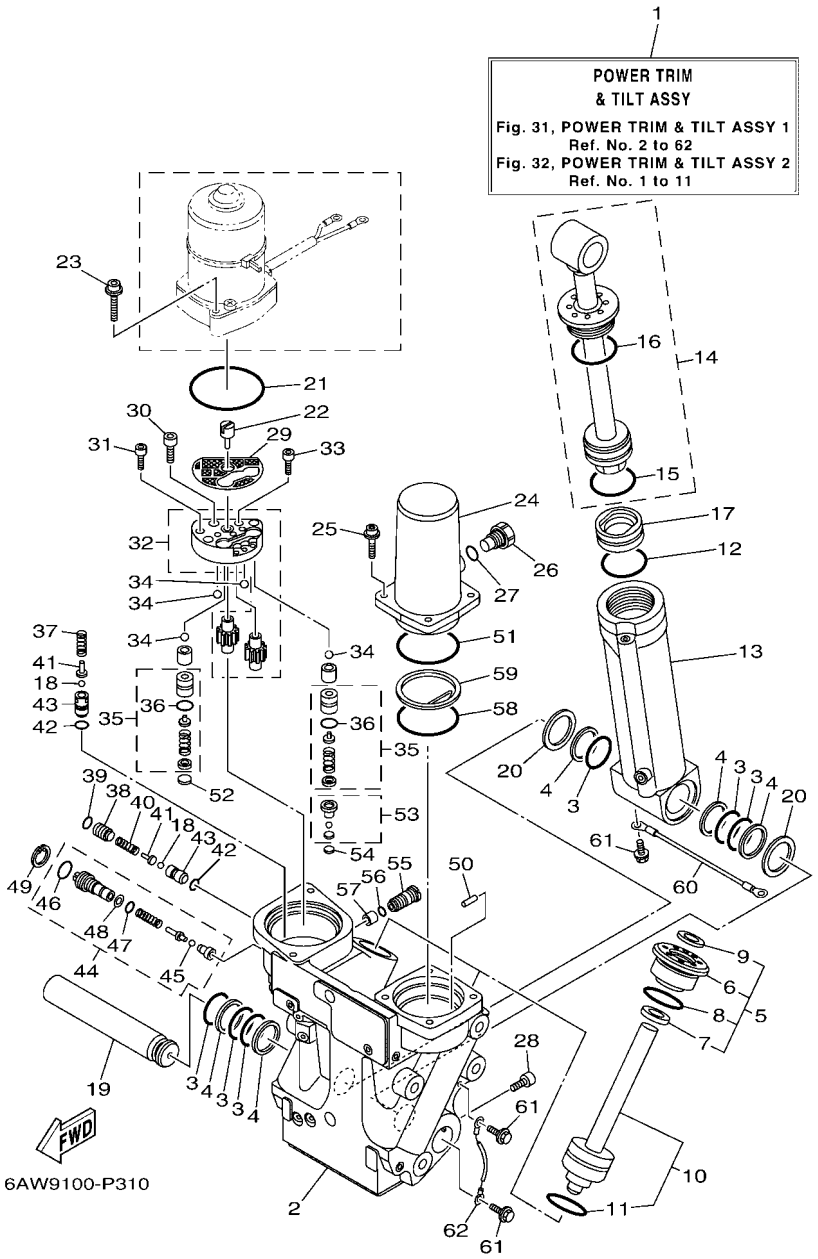

FIG. 31 POWER TRIM & TILT ASSY 1 — PUISSANCE PARER ET INCLINER 1

REF. NO.	PART NO. N° PIECES	DESCRIPTION DESCRIPTION	6AWD	6AXD				REMARKS REMARQUES
28	6AW–4388E–00	BOLT ,SCREW VIS	1	1				
29	64E–43817–11	FILTER 2 FILTRE 2	1	1				
30	6AW–43878–00	BOLT, SOCKET BOULON	4	4				
31	6AW–43888–00	BOLT, SOCKET BOULON	3	3				
32	6AW–43830–00	GEAR PUMP ASSY POMPE A PIGNON (ENS.)	1	1				
33	6AW–43886–00	BOLT BOULON	1	1				
34	6AW–43858–00	BALL BILLE	4	4				
35	6AW–43802–00	VALVE SUB ASSY CLAPET AUXILIAIRE (ENS.)	2	2				
36	6E5–43896–00	.O-RING .JOINT TORIQUE	1	1				
37	6AW–43856–00	SPRING, DOWN RELIEF RESSORT	1	1				
38	6AW–4388J–00	PLUG 2 BOUCHON 2	1	1				
39	6AW–43869–00	O-RING JOINT TORIQUE	1	1				
40	6AW–4384H–00	SPRING RESSORT	1	1				
41	6AW–43844–00	PIN, VALVE SUPPORT GOUPILLE	2	2				
42	6G5–43863–00	O-RING JOINT TORIQUE	2	2				
43	6AW–4382G–00	VALVE SEAT JEU DE POINTEAUX	2	2				
44	6AW–43860–01	MANUAL VALVE SUB-ASSY SOUPAPE, MANUEL (ENS.)	1	1				
45	64E–43858–00	.BALL .BILLE	1	1				
46	72X–85075–L0	.O-RING .JOINT TORIQUE	1	1				
47	64E–4387A–00	.O-RING .JOINT TORIQUE	1	1				
48	64E–43873–00	.RING, BACK UP .RESSORT	1	1				
49	6AW–43875–00	RING, SNAP RESSORT	1	1				
50	6AW–4381G–00	PIN 1 GOUPILLE 1	1	1				
51	6AW–43861–00	O-RING JOINT TORIQUE	1	1				
52	6AW–43817–00	FILTER 2 FILTRE 2	1	1				
53	6AW–43809–00	SEAT VALVE COMP. 2 SIEGE VALVE COMP. 2	1	1				
54	64E–43816–00	FILTER 1 FILTRE 1	1	1				

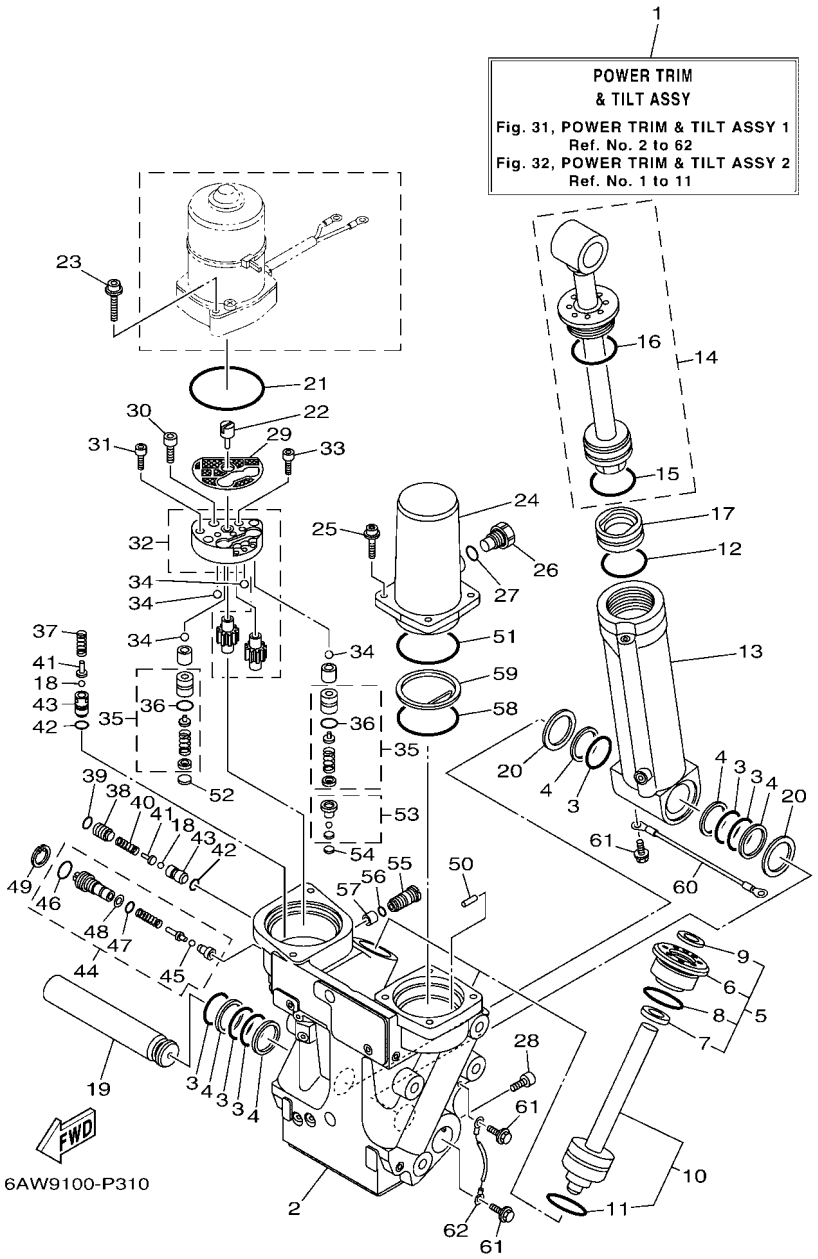

FIG. 31 POWER TRIM & TILT ASSY 1 — PUISSANCE PARER ET INCLINER 1

REF. NO.	PART NO. N° PIECES	DESCRIPTION DESCRIPTION	6AWD	6AXD				REMARKS REMARQUES
55	6AX–4388J–00	PLUG 2 BOUCHON 2	1	1				
56	64E–43865–00	O-RING JOINT TORIQUE	1	1				
57	6AW–4388H–00	PLUG BOUCHON	1	1				
58	6AW–4389J–00	O-RING JOINT TORIQUE	1	1				
59	6AW–43899–00	PLATE STOPPER PLAQUETTE	1	1				
60	6H1–82148–00	WIRE, LEAD 4 FIL 4	1	1				
61	97595–06510	BOLT, WITH WASHER VIS HEXAGONAL AVC RONDELLE	3	3				
62	6AW–82148–00	WIRE, LEAD 4 FIL 4	1	1				

FIG. 32 POWER TRIM & TILT ASSY 2 — PUISSANCE PARER ET INCLINER 2

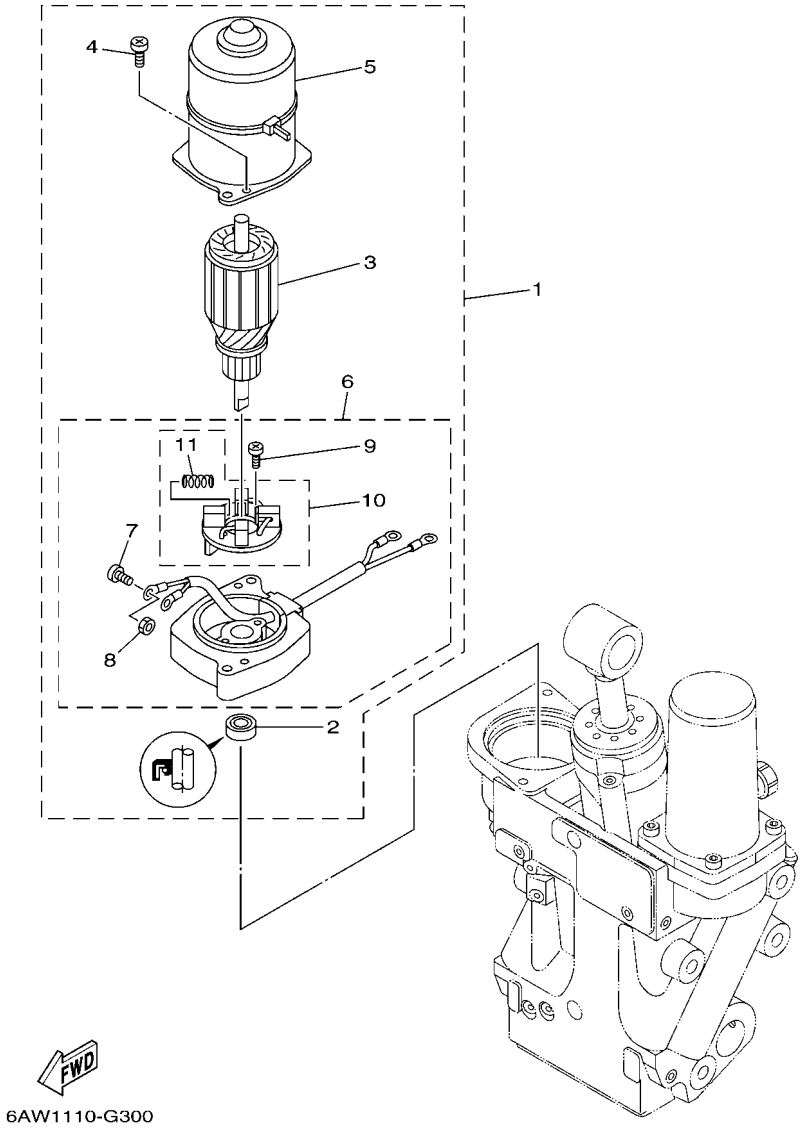

REF. NO.	PART NO. N° PIECES	DESCRIPTION DESCRIPTION	6AWD	6AXD				REMARKS REMARQUES
1	6AW–43880–02	MOTOR ASSY MOTEUR (ENS.)	1	1				
2	6AW–43882–00	.OIL SEAL .JOINT SPI	1	1				
3	6AW–43805–00	.ARMATURE ASSY .INDUIT (ENS.)	1	1				
4	6AW–43843–00	.SCREW .VIS	2	2				
5	6AW–43804–01	.STATOR ASSY .STATOR (ENS.)	1	1				
6	6AW–43881–12	.FRAME, END .BATI	1	1				
7	6AX–43887–00	..BOLT ..BOULON	2	2				
8	6AW–43138–00	..NUT ..ECROU	2	2				
9	6AW–43842–00	..SCREW ..VIS	2	2				
10	6AW–4380J–00	..HOLDER, BRUSH ..PORTE-BALAI	1	1				
11	6AW–4386K–00	...SPRING, BRUSH ...RESSORT, BALAI	4	4				

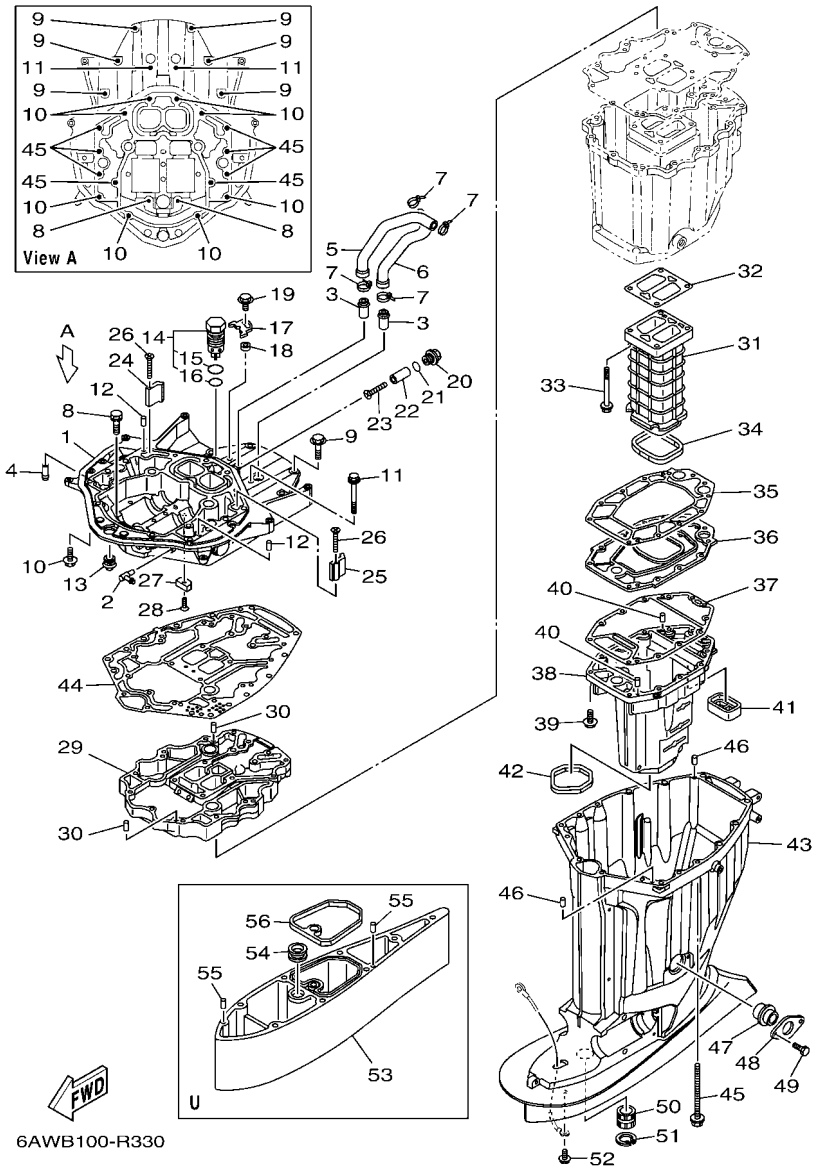

FIG. 33 UPPER CASING — FOURREAU

REF. NO.	PART NO. N° PIECES	DESCRIPTION DESCRIPTION	6AWD	6AXD				REMARKS REMARQUES
1	6AW–41137–11–CA	GUIDE, EXHAUST COLLECTEUR D'ECHAPPEMENT	1	1				
2	6H1–11372–00	NIPPLE, HOSE RACCORD, TUYAU	1	1				
3	6AW–1475G–00	PIPE 4 DURITE 4	2	2				
4	6AW–1475J–00	PIPE 6 DURITE 6	2	2				
5	6AW–1244H–00	HOSE 5 DURITE 5	1	1				
6	6AW–1243F–00	HOSE,3 DURITE 3	1	1				
7	90465–11M59	CLAMP BRIDE	4	4				
8	90119–08102	BOLT, WITH WASHER BOULON, AVEC RONDELLE	2	2				
9	97E75–10545	BOLT, HEXAGON W/W DEEP RECESS VIS HEXAGONAL AVC RONDELLE	6	6				
10	90119–10040	BOLT, WITH WASHER BOULON, AVEC RONDELLE	8	8				
11	97E75–10585	BOLT, HEXAGON W/W DEEP RECESS VIS HEXAGONAL AVC RONDELLE	2	2				
12	93608–16M16	PIN, DOWEL AXE	2	2				
13	6AW–42724–00	GROMMET PASSE-FIL	1	1				
14	6AW–11371–10	PRESSURE CONTROL VALVE ASSY SOUPAPE, COMMANDE DE PRESSION	1	1				
15	93210–347A1	.O-RING .JOINT TORIQUE	1	1				
16	93210–28543	.O-RING .JOINT TORIQUE	1	1				
17	69J–12233–00	PLATE, GUIDE STOPPER 1 PLAQUE, GUIDE BUTEE 1	1	1				
18	90387–06037	COLLAR COLLERETTE	1	1				
19	97E95–06520	BOLT, HEXAGON W/W DEEP RECESS VIS HEXAGONAL AVC RONDELLE	1	1				
20	6AW–11197–00	PLUG, BLIND PLOT, BORGNE	1	1				
21	93210–19758	O-RING JOINT TORIQUE	1	1				
22	6AW–1132S–00	ANODE 7 ANODE 7	1	1				
23	98780–05550	SCREW, FLAT HEAD VIS A TETE FRAISEE	1	1				
24	6AW–1132T–00	ANODE 8 ANODE 8	1	1				
25	6AW–1132U–00	ANODE 9 ANODE 9	1	1				
26	98780–05550	SCREW, FLAT HEAD VIS A TETE FRAISEE	2	2				
27	63P–11325–11	ANODE ANODE	1	1				

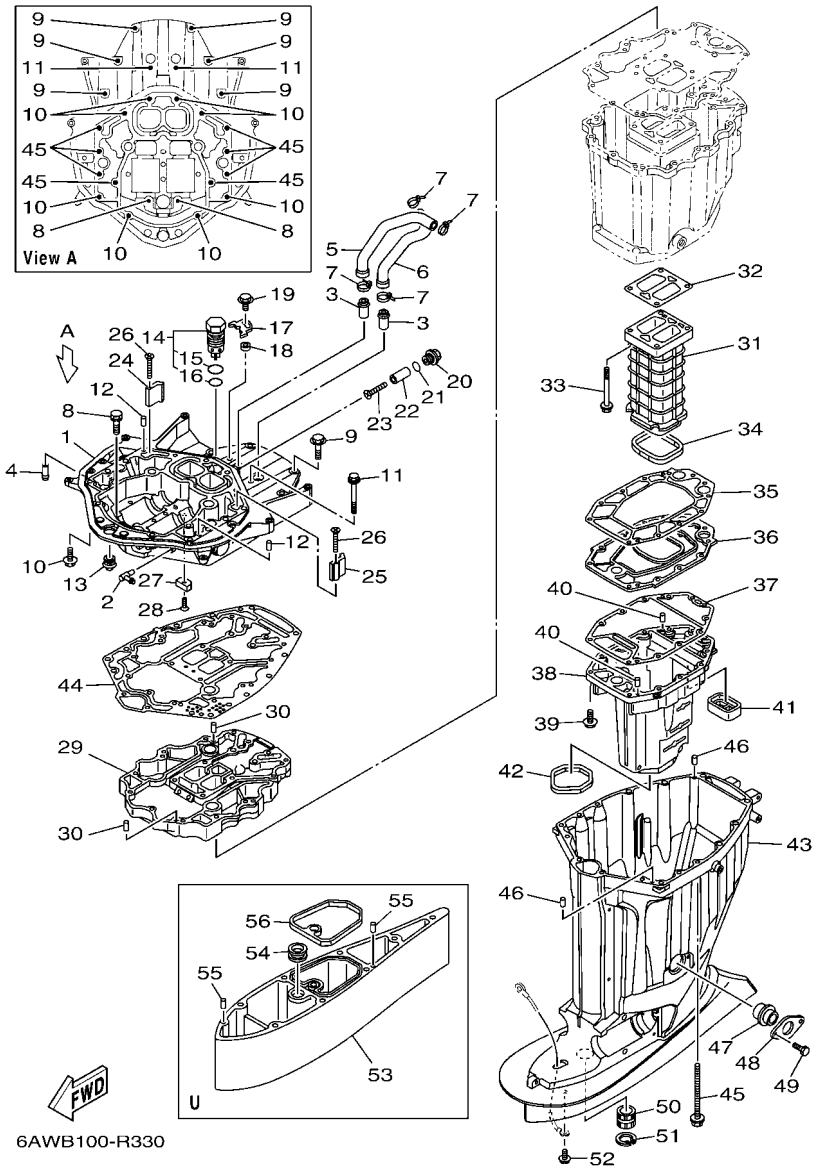

FIG. 33 UPPER CASING FOURREAU

REF. NO.	PART NO. N° PIECES	DESCRIPTION DESCRIPTION	6AWD	6AXD				REMARKS REMARQUES
28	90151–06M02	SCREW, COUNTERSUNK VIS, TETE NOYEE	1	1				
29	6AW–41131–01–CA	MANIFOLD, EXT. 1 PIPE D'ECHAPPEMENT	1	1				
30	93608–16M16	PIN, DOWEL AXE	2	2				
31	6AW–41132–00–9S	MANIFOLD, EXHAUST PIPE D'ECHAPPEMENT	1	1				
32	6AW–41134–02	GASKET, EXHAUST MANIFOLD JOINT, PIPE D'ECHAPPEMENT	1	1				
33	90119–08117	BOLT, WITH WASHER BOULON, AVEC RONDELLE	4	4				
34	6AW–41138–00	SEAL, EXT. 1 JOINT DE GROUPE 1	1	1				
35	6AW–41135–00	GASKET, EXHAUST MANIFOLD JOINT, PIPE D'ECHAPPEMENT	1	1				
36	6AW–45181–01–9S	PLATE PLAQUETTE	1	1				
37	6AW–41136–00	GASKET, EXHAUST MANIFOLD 4 JOINT, PIPE D'ECHAPPEMENT 4	1	1				
38	6AW–14711–00–9S	MUFFLER 1 POT D'ECHAPPEMENT 1	1	1				
39	97E75–08535	BOLT, HEXAGON W/W DEEP RECESS VIS HEXAGONAL AVC RONDELLE	12	12				
40	93606–19M23	PIN, DOWEL GOUPILLE	2	2				
41	6AW–45127–00	SEAL JOINT	1	1				
42	69J–45123–00	GASKET, MUFFLER JOINT, POT DE DETENTE	1	1				
43	6AW–45111–10–8D	CASING, UPPER FOURREAU	1	1				
44	6AW–45113–00	GASKET, UPPER CASING JOINT, TUBE D'ARBRE	1	1				
45	90119–10007	BOLT, WITH WASHER BOULON, AVEC RONDELLE	8	8				
46	93608–16M16	PIN, DOWEL AXE	2	2				
47	69J–15316–00	DAMPER 1 AMORTISSEUR 1	1	1				
48	69J–45152–10	COVER, UPPER CASING 2 CAPUCHON FOURREAU	1	1				
49	97D95–06012	BOLT, HEXAGON DEEP RECESS VIS HEXAGONAL	2	2				
50	6AW–45318–00	BUSHING, DRIVE SHAFT DOUILLE, ARBRE MOTEUR	1	1				
51	93420–38091	CIRCLIP CIRCLIP, TYPE S	1	1				
52	95D95–06010	BOLT, FLANGE DEEP RECESS BOULON FIXATION	1	1				
53	6AW–45211–10–8D	EXTENSION EXTENSION	1	1				U(30.1") U(30.1")
54	6AW–44366–00	DAMPER, WATER SEAL 2 JOINT, TUBE D'EAU 2	1	1				U(30.1") U(30.1")

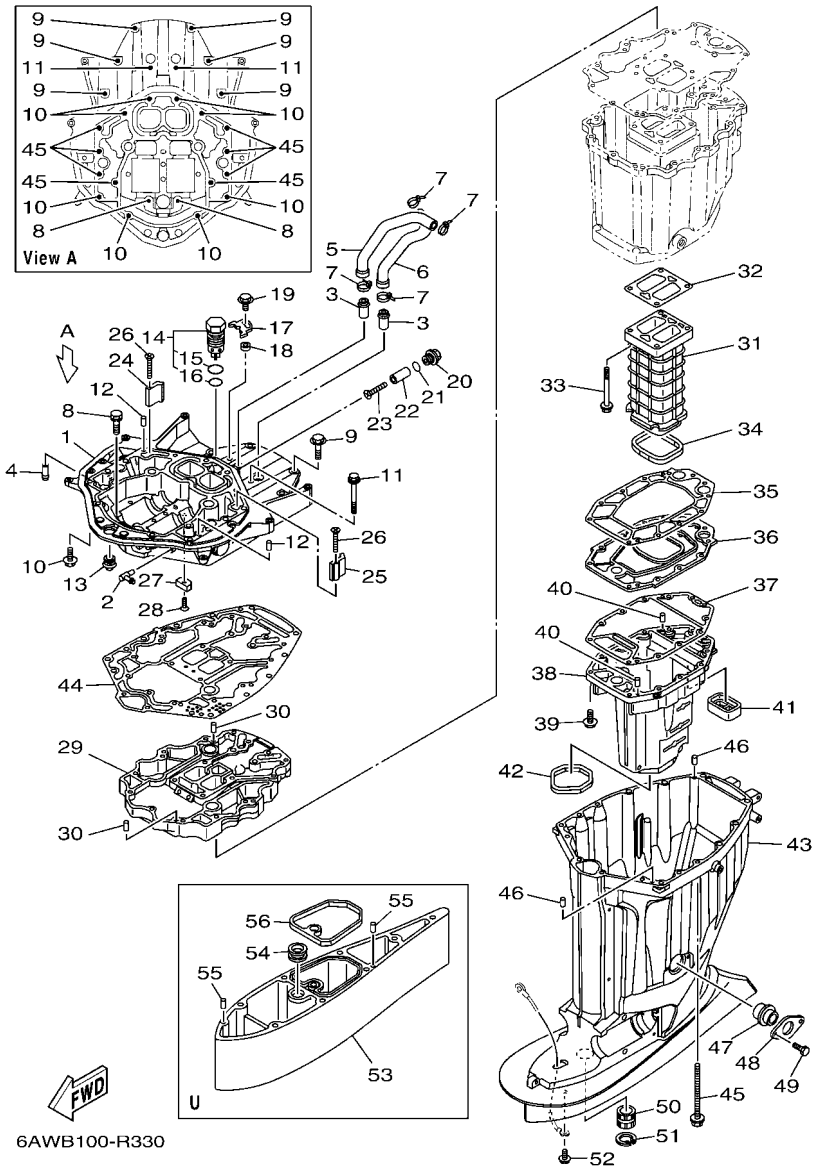

FIG. 33 UPPER CASING FOURREAU

REF. NO.	PART NO. N° PIECES	DESCRIPTION DESCRIPTION	6AWD	6AXD				REMARKS REMARQUES
55	93608–12M05	PIN, DOWEL AXE	2	2				U(30.1") U(30.1")
56	6AW–45159–00	DAMPER CAOUTCHOUC, JOINT	1	1				U(30.1") U(30.1")

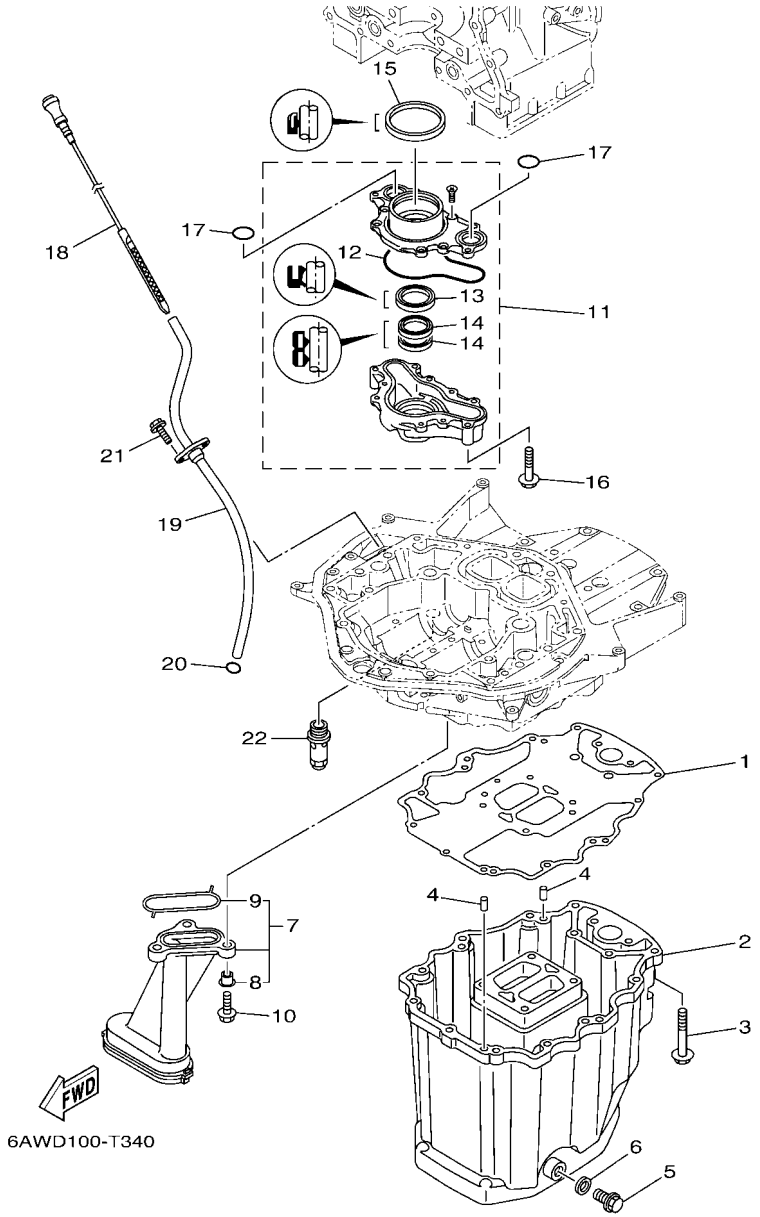

FIG. 34 OIL PAN — VENTILATEUR D'HUILE

REF. NO.	PART NO. N° PIECES	DESCRIPTION DESCRIPTION	6AWD	6AXD				REMARKS REMARQUES
1	6AW–15312–00	GASKET, OIL PAN JOINT DE VENTILATEUR D'HUILE	1	1				
2	6AW–15311–00–CA	OIL PAN VENTILATEUR D'HUILE	1	1				
3	97E75–08570	BOLT, HEXAGON W/W DEEP RECESS VIS HEXAGONAL AVC RONDELLE	13	13				
4	93608–16M16	PIN, DOWEL AXE	2	2				
5	90340–14M06	PLUG, STRAIGHT SCREW PLOT, FILETE DROIT	1	1				
6	90430–14M09	GASKET JOINT	1	1				
7	6AW–13411–00	STRAINER, OIL FILTRE, HUILE	1	1				
8	90387–06263	.COLLAR .COLLERETTE	3	3				
9	6AW–13415–00	.SEAL, OIL STRAINER .JOINT, FILTRE A HUILE	1	1				
10	95812–06025	BOLT, FLANGE BOULON	3	3				
11	6AW–13300–02	OIL PUMP ASSY POMPE A HUILE COMPLETE	1	1				
12	6CB–13329–00	.GASKET, PUMP COVER .JOINT, COUVERCLE DE POMPE	1	1				
13	6AW–13119–00	.OIL SEAL .JOINT SPY	1	1				
14	6AW–13631–00	.OIL SEAL .JOINT SPY	2	2				
15	69J–11355–00	SEAL, CYLINDER 1 JOINT, SPY CYLINDRE	1	1				
16	97E75–06550	BOLT, HEXAGON W/W DEEP RECESS VIS HEXAGONAL AVC RONDELLE	4	4				
17	93210–26658	O-RING JOINT TORIQUE	2	2				
18	6AW–15362–01	PLUG, OIL LEVEL PLOT, NIVEAU D'HUILE	1	1				
19	6AW–15377–00	GUIDE, INLET GUIDE D'ADMISSION	1	1				
20	93210–19MJ3	O-RING JOINT TORIQUE	1	1				
21	95895–06016	BOLT, FLANGE BOULON	2	2				
22	6AW–13490–01	RELIEF VALVE ASSY SOUPAPE DE SECURITE COMPLET	1	1				

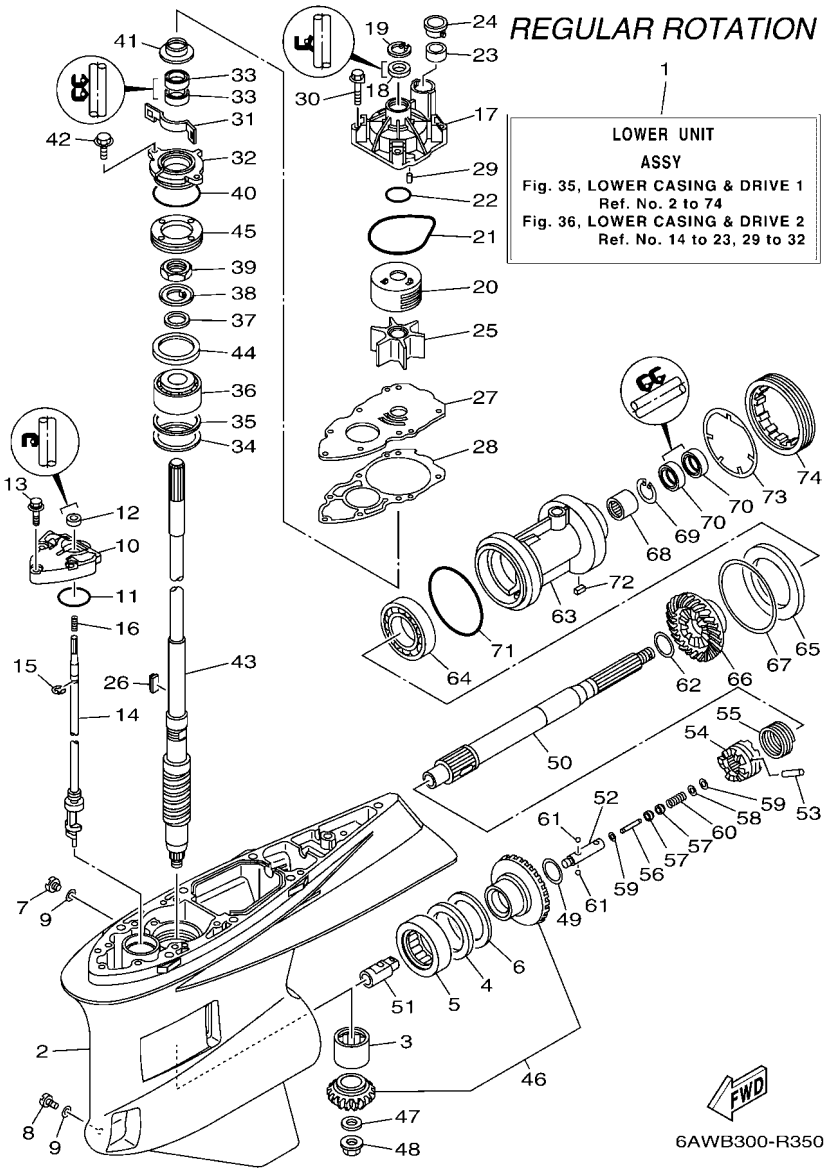

FIG. 35 LOWER CASING & DRIVE 1 — BOITIER D'HELICE TRANSMISSION1

REF. NO.	PART NO. N° PIECES	DESCRIPTION DESCRIPTION	6AWD	6AXD				REMARKS REMARQUES
1	6AW–45300–21–8D	LOWER UNIT ASSY UNITE INFERIEURE (ENS.)	1					X(25.1"),RH X(25.1"),RH
	6AW–45300–32–8D	LOWER UNIT ASSY UNITE INFERIEURE (ENS.)	1					U(30.1"),RH U(30.1"),RH
2	6AW–45311–01–8D	CASING, LOWER BOITIER D'HELICE	1					
3	93311–93590	BEARING ROULEMENT	1					
4	93340–67011	BEARING CERVEAUX DE DIRECTION	1					
5	93390–00031	BEARING ROULEMENT	1					
6	6AW–45567–00	SHIM (T:2.00MM) CALE (T:2.00MM)	1					UR UR
	6AW–45567–10	SHIM (T:2.03MM) CALE (T:2.03MM)	1					UR UR
	6AW–45567–20	SHIM (T:2.06MM) CALE (T:2.06MM)	1					UR UR
	6AW–45567–30	SHIM (T:2.09MM) CALE (T:2.09MM)	1					UR UR
	6AW–45567–40	SHIM (T:2.12MM) CALE (T:2.12MM)	1					UR UR
	6AW–45567–50	SHIM (T:2.15MM) CALE (T:2.15MM)	1					UR UR
7	90340–08002	PLUG, STRAIGHT SCREW PLOT, FILETE DROIT	1					
8	688–45341–10	PLUG, DRAIN BOUCHON DE VIDANGE	1					
9	90430–08003	GASKET JOINT	2					
10	6AW–45321–00	PLATE PLAQUETTE	1					
11	93210–48214	O-RING JOINT TORIQUE	1					
12	93101–12M70	OIL SEAL JOINT SPY	1					
13	90119–08M26	BOLT, WITH WASHER BOULON, AVEC RONDELLE	3					
14	6AW–44150–00	SHIFT CAM ASSY CAME D'INVERSION	1					X(25.1"),RH X(25.1"),RH
	6AW–44150–10	SHIFT CAM ASSY CAME D'INVERSION	1					U(30.1"),RH U(30.1"),RH
15	99002–10600	CIRCLIP CIRCLIP	1					
16	90501–127J4	SPRING, COMPRESSION RESSORT, COMPRESSION	1					
17	6AW–44311–01	HOUSING, WATER PUMP CORPS, POMPE A EAU	1					
18	93109–24001	OIL SEAL JOINT SPY	1					
19	93420–35085	CIRCLIP CIRCLIP, TYPE S	1					
20	6AW–44322–00	INSERT, CARTRIDGE CUVETTE	1					

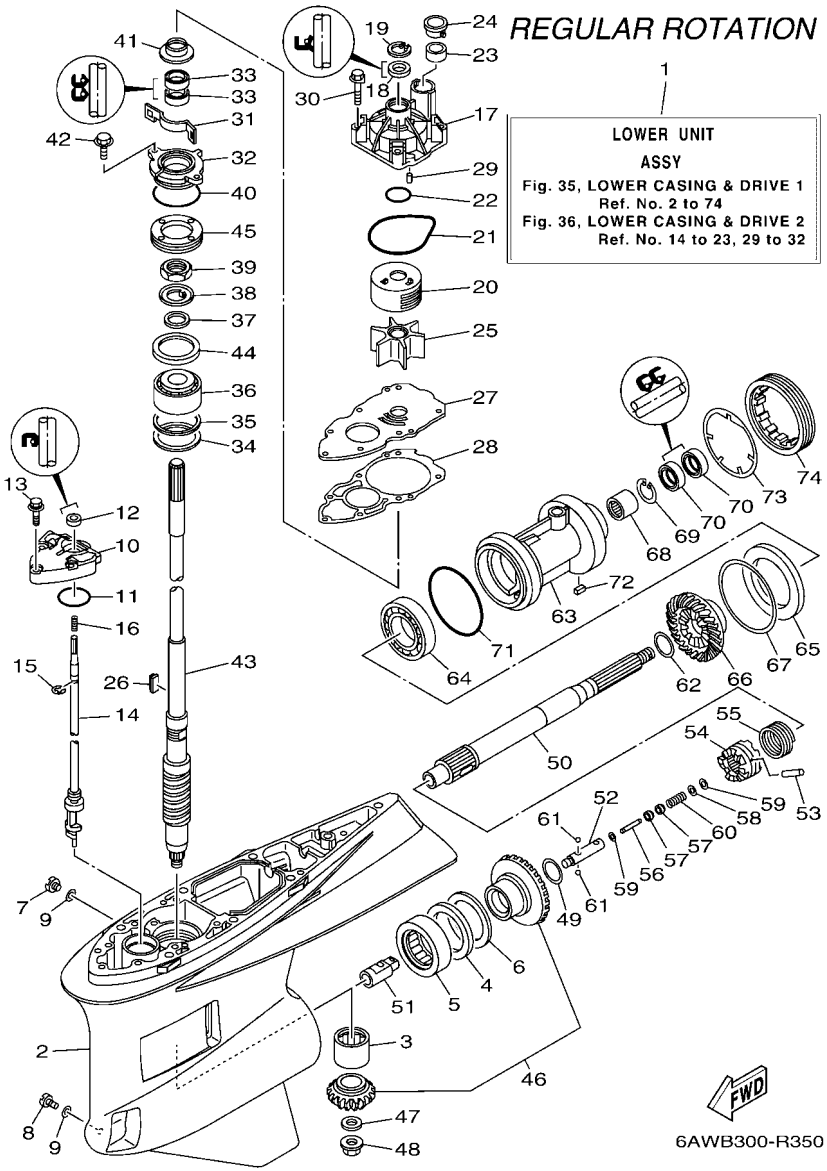

FIG. 35 LOWER CASING & DRIVE 1 — BOITIER D'HELICE TRANSMISSION1

REF. NO.	PART NO. N° PIECES	DESCRIPTION DESCRIPTION	6AWD	6AXD				REMARKS REMARQUES
21	93210–94003	O-RING JOINT TORIQUE	1					
22	93210–37160	O-RING JOINT TORIQUE	1					
23	6AW–44365–00	DAMPER, WATER SEAL 1 JOINT, TUBE D'EAU 1	1					
24	6AW–44312–00	COVER, WATER PUMP HOUSING COUVERCLE	1					
25	6AW–44352–00	IMPELLER TURBINE	1					
26	6AW–44336–00	KEY CLAVETTE	1					
27	6AW–44323–00	OUTER PLATE, CARTRIDGE PLAQUE EXTERIEURE	1					
28	6AW–44315–00	GASKET, WATER PUMP JOINT, POMPE A EAU	1					
29	93606–12019	PIN, DOWEL GOUPILLE	2					
30	90119–08M14	BOLT, WITH WASHER BOULON, AVEC RONDELLE	4					
31	6AW–45723–00	PLATE, SEAL PLAQUE, JOINT	1					
32	6AW–45335–00–CA	HOUSING, OIL SEAL LOGEMENT DE JOINT SPY	1					
33	93101–28018	OIL SEAL JOINT SPY	2					
34	90201–68008	WASHER, PLATE RONDELLE, PLATE	1					
35	6AW–45587–00	SHIM (T:0.10MM) CALE (T:0.10MM)	1					UR UR
	6AW–45587–10	SHIM (T:0.12MM) CALE (T:0.12MM)	1					UR UR
	6AW–45587–20	SHIM (T:0.15MM) CALE (T:0.15MM)	1					UR UR
	6AW–45587–30	SHIM (T:0.18MM) CALE (T:0.18MM)	1					UR UR
	6AW–45587–40	SHIM (T:0.30MM) CALE (T:0.30MM)	1					UR UR
	6AW–45587–50	SHIM (T:0.40MM) CALE (T:0.40MM)	1					UR UR
	6AW–45587–60	SHIM (T:0.50MM) CALE (T:0.50MM)	1					UR UR
36	93399–99962	BEARING ROULEMENT	1					
37	90201–301U7	WASHER, PLATE RONDELLE, PLATE	1					
38	90214–30003	WASHER, CLAW RONDELLE, A GRIFFES	1					
39	90170–30M18	NUT ECROU	1					
40	93210–69MG6	O-RING JOINT TORIQUE	1					
41	6AW–45344–00	COVER, OIL SEAL FLASQE, JOINT D'HUILE	1					

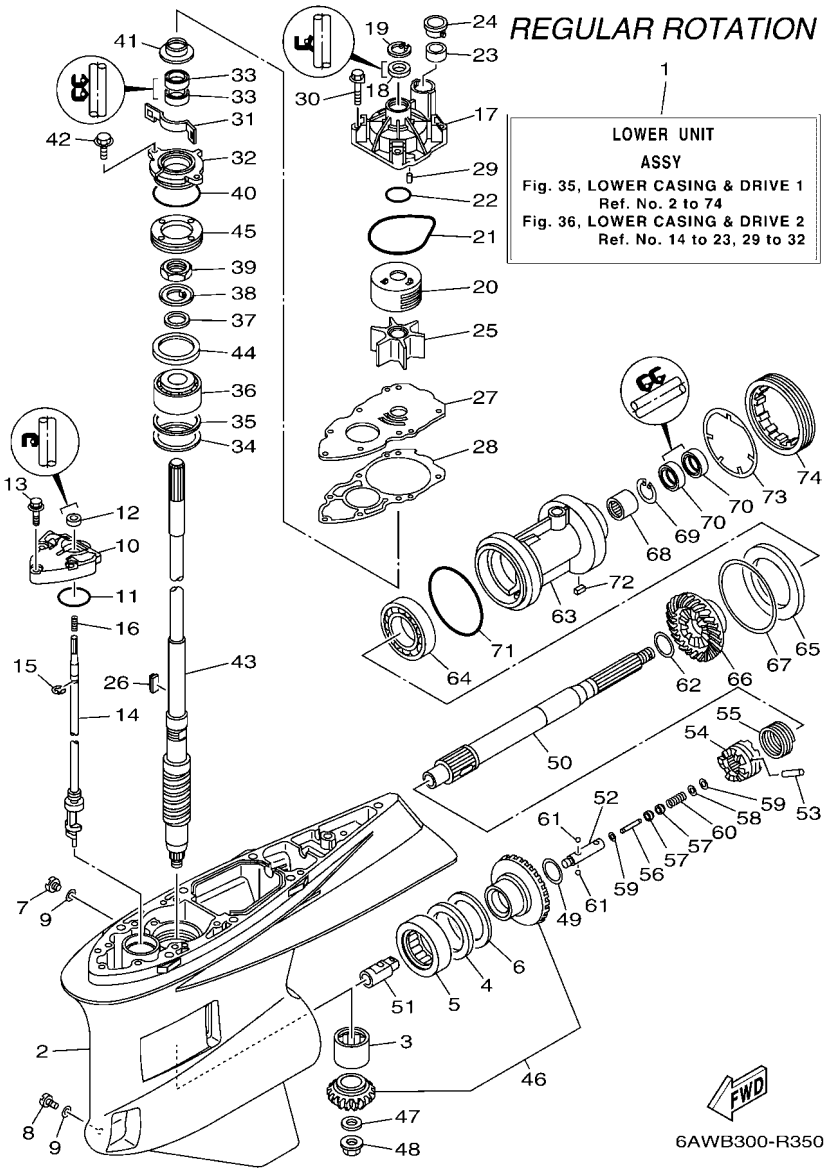

FIG. 35 LOWER CASING & DRIVE 1 — BOITIER D'HELICE TRANSMISSION1

REF. NO.	PART NO. N° PIECES	DESCRIPTION DESCRIPTION	6AWD	6AXD				REMARKS REMARQUES
42	97E95–08520	BOLT, HEXAGON W/W DEEP RECESS VIS HEXAGONAL AVC RONDELLE	2					
43	6AW–45501–00	DRIVE SHAFT COMP. ARBRE MOTEUR COMP.	1					X(25.1") X(25.1")
	6AW–45501–10	DRIVE SHAFT COMP. ARBRE MOTEUR COMP.	1					U(30.1") U(30.1")
44	6T5–45539–00	SPACER 2 ENTRETOISE 2	1					
45	6AW–45244–00	NUT ECROU	1					
46	6AW–45550–00	GEAR SET KIT, PIGNON	1					
47	90201–18023	WASHER, PLATE RONDELLE, PLATE	1					
48	90179–18009	NUT ECROU	1					
49	90201–35015	WASHER, PLATE RONDELLE, PLATE	1					
50	6AW–45611–00	SHAFT, PROPELLER ARBRE, HELICE	1					
51	6AW–45641–00	SHIFTER EMBRAYAGE	1					
52	61A–45634–01	SLIDE, SHIFT CONTRE-POUSSOIR	1					
53	6AW–45632–00	PIN, CROSS GOUPILLE DE CRABOT	1					
54	6AW–45631–00	CLUTCH, DOG CRABOT	1					
55	6AW–45633–00	RING, CROSS PIN JONC, GOUPILLE CRABOT	1					
56	6H1–45668–00	SHAFT, FREE 1 AXE 1	1					
57	61A–45635–00	PLUNGER, SHIFT POUSSOIR D'EMBRAYAGE	2					
58	90201–02M00	WASHER, PLATE RONDELLE, PLATE	1					
59	90183–02M03	NUT, SPRING ECROU, RESSORT	2					
60	90501–10M77	SPRING, COMPRESSION RESSORT, COMPRESSION	1					
61	93501–04011	BALL BILLE	2					
62	6AW–45612–00	WASHER, THRUST RONDELLE, DE BUTEE	1					
63	6AW–45332–00	HOUSING, BEARING FLASQUE, ROULEMENT	1					
64	93306–21101	BEARING ROULEMENT	1					
65	6AW–45576–00	WASHER, THRUST 2 RONDELLE DE CALAGE 2	1					
66	6AW–45571–00	GEAR 2 (26T) PIGNON 2 (26T)	1					
67	6AW–45577–00	SHIM (T:0.10MM) CALE (T:0.10MM)	1					UR UR

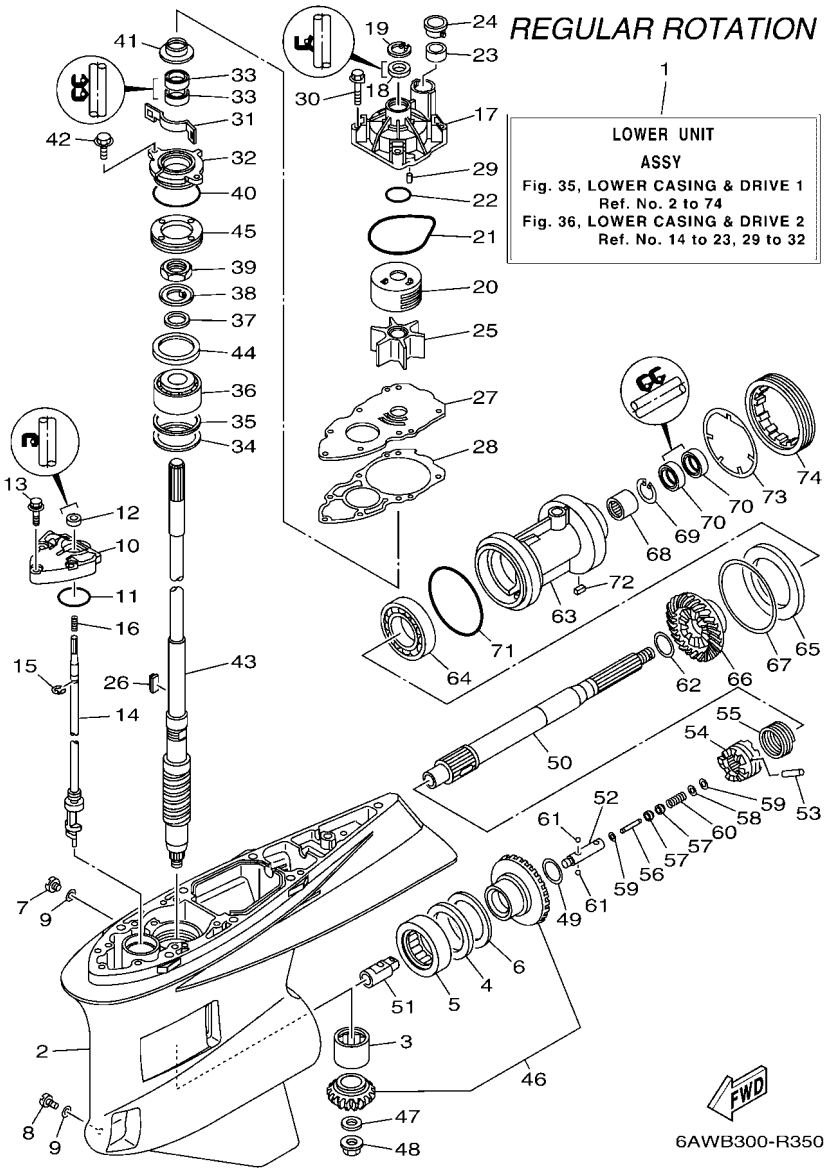

FIG. 35 LOWER CASING & DRIVE 1 — BOITIER D'HELICE TRANSMISSION1

REF. NO.	PART NO. N° PIECES	DESCRIPTION DESCRIPTION	6AWD	6AXD				REMARKS REMARQUES
67	6AW–45577–10	SHIM (T:0.12MM) CALE (T:0.12MM)	1					UR UR
	6AW–45577–20	SHIM (T:0.15MM) CALE (T:0.15MM)	1					UR UR
	6AW–45577–30	SHIM (T:0.18MM) CALE (T:0.18MM)	1					UR UR
	6AW–45577–40	SHIM (T:0.30MM) CALE (T:0.30MM)	1					UR UR
	6AW–45577–50	SHIM (T:0.40MM) CALE (T:0.40MM)	1					UR UR
	6AW–45577–60	SHIM (T:0.50MM) CALE (T:0.50MM)	1					UR UR
68	93311–63591	BEARING ROULEMENT	1					
69	99009–47500	CIRCLIP CIRCLIP	1					
70	93101–35018	OIL SEAL JOINT SPY	2					
71	93211–10232	O-RING JOINT TORIQUE	1					
72	90282–05008	KEY, STRAIGHT CLAVETTE, DROITE	1					
73	6AW–45383–00	WASHER, CLAW FREIN D'ECROU	1					
74	6AW–45384–00	NUT ECROU	1					

FIG. 36 LOWER CASING & DRIVE 2 — BOITIER D'HELICE TRANSMISSION2

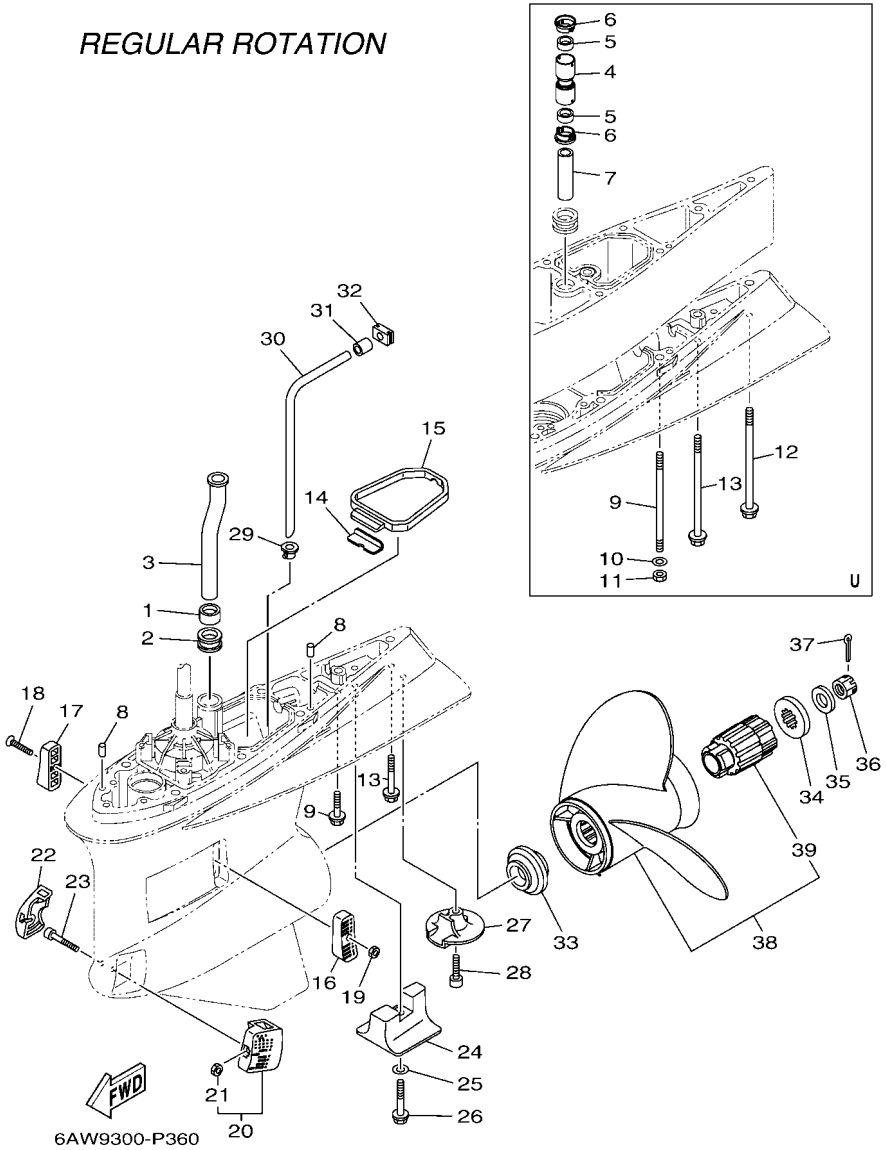

REF. NO.	PART NO. N° PIECES	DESCRIPTION DESCRIPTION	6AWD	6AXD				REMARKS REMARQUES
1	6AW–44365–00	DAMPER, WATER SEAL 1 JOINT, TUBE D'EAU 1	1					
2	6AW–44366–00	DAMPER, WATER SEAL 2 JOINT, TUBE D'EAU 2	1					
3	6AW–44361–00	TUBE, WATER 1 TUBE D'EAU 1	1					
4	6CE–44362–00	TUBE, WATER 2 TUBE D'EAU 2	1					U(30.1") U(30.1")
5	6AW–44365–00	DAMPER, WATER SEAL 1 JOINT, TUBE D'EAU 1	2					U(30.1") U(30.1")
6	6AW–44312–00	COVER, WATER PUMP HOUSING COUVERCLE	2					U(30.1") U(30.1")
7	6AW–44363–00	TUBE, WATER 3 TUBE D'EAU 3	1					U(30.1") U(30.1")
8	93608–12M05	PIN, DOWEL AXE	2					
9	90119–10038	BOLT, WITH WASHER BOULON, AVEC RONDELLE	7					X(25.1") X(25.1")
	90116–10041	BOLT, STUD GOUJON	6					U(30.1") U(30.1")
10	90201–10048	WASHER, PLATE RONDELLE, PLATE	6					U(30.1") U(30.1")
11	90170–10009	NUT ECROU	6					U(30.1") U(30.1")
12	90119–10008	BOLT, WITH WASHER BOULON, AVEC RONDELLE	1					U(30.1") U(30.1")
13	97E75–10570	BOLT, HEXAGON W/W DEEP RECESS VIS HEXAGONAL AVC RONDELLE	1					X(25.1") X(25.1")
	90119–10009	BOLT, WITH WASHER BOULON, AVEC RONDELLE	1					U(30.1") U(30.1")
14	61A–45376–00	GUIDE, SEAL DAMPER BUTEE, JOINT CAOUTCHOUC	1					
15	6AW–45375–00	DAMPER, SEAL BOURRELET, CAOUTCHOUC	1					
16	6AW–45214–00	COVER, WATER INLET 1 GRILLE, ENTREE D'EAU 1	1					
17	6AW–45215–00	COVER, WATER INLET 2 GRILLE, ENTREE D'EAU 2	1					
18	90152–05003	SCREW, COUNTERSUNK VIS, TETE NOYEE	1					
19	90185–05002	NUT, NYLON ECROU,AUTO-BLOQUANT	1					
20	6AW–45224–00	COVER, WATER INLET 3 GRILLE, ENTREE D'EAU 3	1					
21	90185–05002	.NUT, NYLON .ECROU,AUTO-BLOQUANT	1					
22	6AW–45225–00	COVER, WATER INLET 4 GRILLE, ENTREE D'EAU 4	1					
23	90110–05050	BOLT, HEXAGON SOCKET HEAD BOULON, TETE HEXAGONALE CREUSE	1					
24	6AW–45373–00	ANODE ANODE	1					
25	92990–10300	WASHER RONDELLE, PLATE	1					

FIG. 36 LOWER CASING & DRIVE 2 — BOITIER D'HELICE TRANSMISSION2

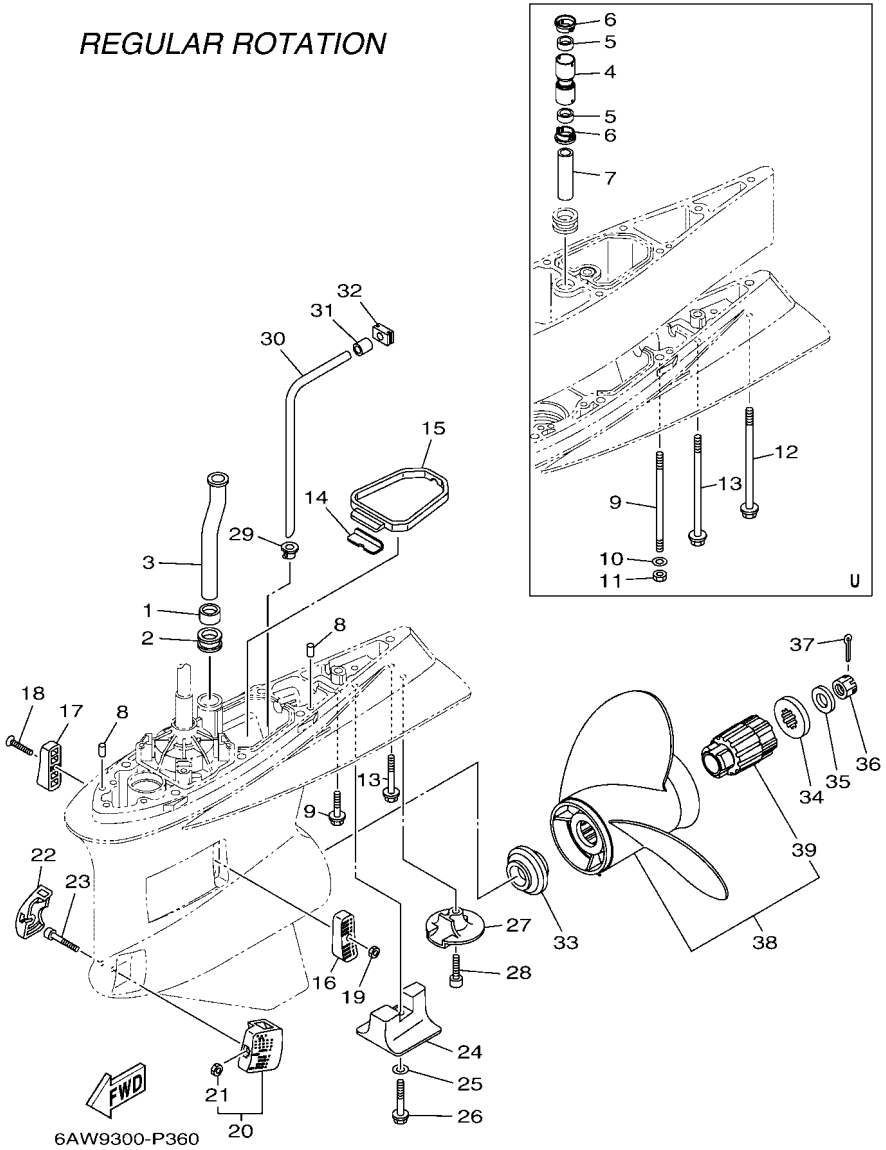

REF. NO.	PART NO. N° PIECES	DESCRIPTION DESCRIPTION	6AWD	6AXD				REMARKS REMARQUES
26	90105–10257	BOLT, FLANGE BOULON, A COLLERETTE	1					
27	6AW–45619–00	CAP CAPUCHON	1					
28	90110–10018	BOLT, HEXAGON SOCKET HEAD BOULON, TETE HEXAGONALE CREUSE	1					
29	6AW–44367–00	DAMPER, WATER SEAL 3 JOINT TUBE D'EAU 3	1					
30	6AW–44362–00	TUBE, WATER 2 TUBE D'EAU 2	1					
31	6AW–44375–00	GROMMET, WATER TUBE 1 PASSE-FIL, TUBE D'EAU 1	1					
32	6AW–44376–00	GROMMET, WATER TUBE 2 PASSE-FIL, TUBE D'EAU 2	1					
33	6AW–45987–00	SPACER 1 ENTRETOISE 1	1					
34	6AW–45997–00	SPACER 2 ENTRETOISE 2	1					
35	90201–19M01	WASHER, PLATE RONDELLE, PLATE	1					
36	90171–18M04	NUT, CASTLE ECROU, CRENELE	1					
37	91490–40030	PIN. COTTER GOUPILLE	1					
38	6AW–45970–20	PROPELLER (3X16-1/4"X15"-X) HELICE (3X16-1/4"X15"-X)	1					UR SDS PROP. UR SDS PROP.
	6AW–45972–20	PROPELLER (3X16-1/4"X17"-X) HELICE (3X16-1/4"X17"-X)	1					UR SDS PROP. UR SDS PROP.
	6AW–45974–20	PROPELLER (3X15-1/2"X19"-X) HELICE (3X15-1/2"X19"-X)	1					UR SDS PROP. UR SDS PROP.
	6AW–45976–20	PROPELLER (3X15-1/4"X21"-X) HELICE (3X15-1/4"X21"-X)	1					UR SDS PROP. UR SDS PROP.
	6AW–45978–20	PROPELLER (3X15-1/4"X23"-X) HELICE (3X15-1/4"X23"-X)	1					UR SDS PROP. UR SDS PROP.
39	6AW–45C81–10	.DAMPER RUBBER, PROPELLER 1 .AMORTISSEUR HELICE 1	1					

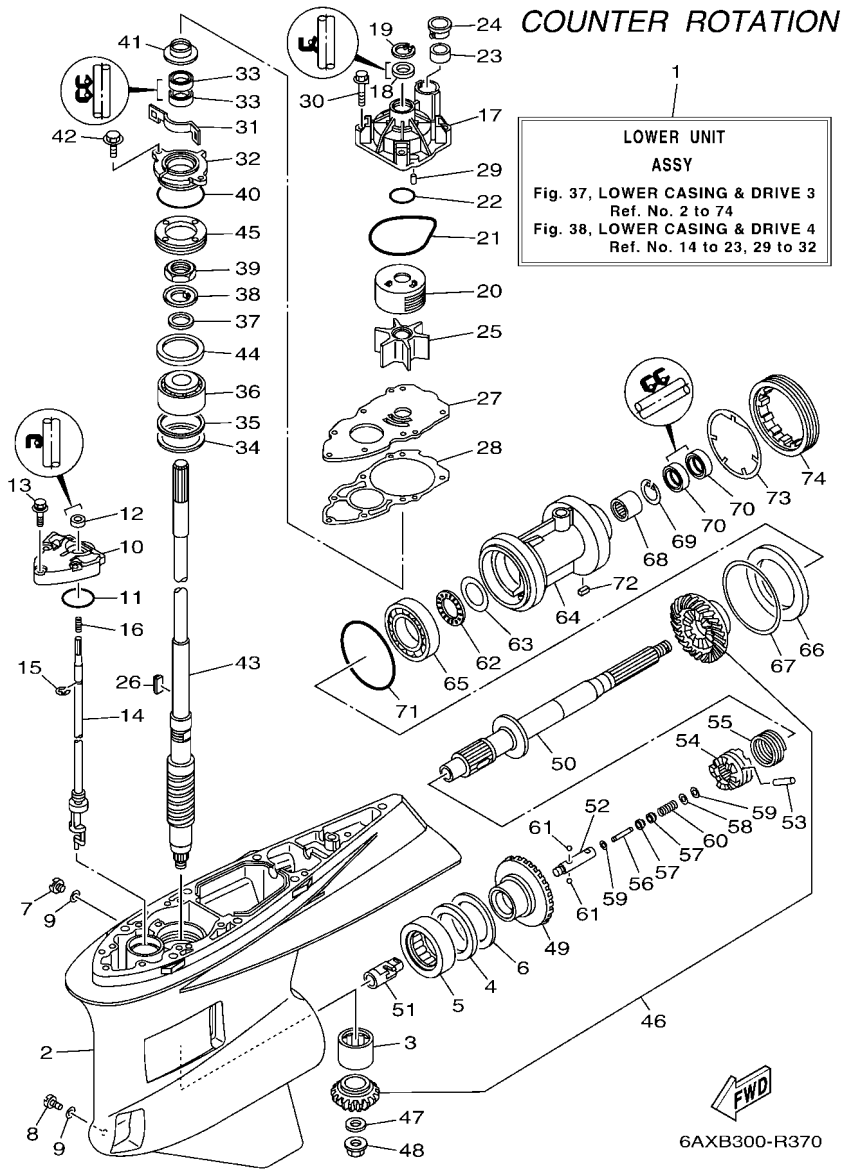

FIG. 37 LOWER CASING & DRIVE 3 — BOITIER D'HELICE TRANSMISSION3

REF. NO.	PART NO. N° PIECES	DESCRIPTION DESCRIPTION	6AWD	6AXD				REMARKS REMARQUES
1	6AX–45300–22–8D	LOWER UNIT ASSY UNITE INFERIEURE (ENS.)		1				X(25.1"),LH X(25.1"),LH
	6AX–45300–33–8D	LOWER UNIT ASSY UNITE INFERIEURE (ENS.)		1				U(30.1"),LH U(30.1"),LH
2	6AW–45311–01–8D	CASING, LOWER BOITIER D'HELICE		1				
3	93311–93590	BEARING ROULEMENT		1				
4	93340–67011	BEARING CERVEAUX DE DIRECTION		1				
5	93390–00031	BEARING ROULEMENT		1				
6	6AW–45567–00	SHIM (T:2.00MM) CALE (T:2.00MM)		1				UR UR
	6AW–45567–10	SHIM (T:2.03MM) CALE (T:2.03MM)		1				UR UR
	6AW–45567–20	SHIM (T:2.06MM) CALE (T:2.06MM)		1				UR UR
	6AW–45567–30	SHIM (T:2.09MM) CALE (T:2.09MM)		1				UR UR
	6AW–45567–40	SHIM (T:2.12MM) CALE (T:2.12MM)		1				UR UR
	6AW–45567–50	SHIM (T:2.15MM) CALE (T:2.15MM)		1				UR UR
7	90340–08002	PLUG, STRAIGHT SCREW PLOT, FILETE DROIT		1				
8	688–45341–10	PLUG, DRAIN BOUCHON DE VIDANGE		1				
9	90430–08003	GASKET JOINT		2				
10	6AW–45321–00	PLATE PLAQUETTE		1				
11	93210–48214	O-RING JOINT TORIQUE		1				
12	93101–12M70	OIL SEAL JOINT SPY		1				
13	90119–08M26	BOLT, WITH WASHER BOULON, AVEC RONDELLE		3				
14	6AX–44150–00	SHIFT CAM ASSY CAME D'INVERSION		1				X(25.1"),LH X(25.1"),LH
	6AX–44150–10	SHIFT CAM ASSY CAME D'INVERSION		1				U(30.1"),LH U(30.1"),LH
15	99002–10600	CIRCLIP CIRCLIP		1				
16	90501–127J4	SPRING, COMPRESSION RESSORT, COMPRESSION		1				
17	6AW–44311–01	HOUSING, WATER PUMP CORPS, POMPE A EAU		1				
18	93109–24001	OIL SEAL JOINT SPY		1				
19	93420–35085	CIRCLIP CIRCLIP, TYPE S		1				
20	6AW–44322–00	INSERT, CARTRIDGE CUVETTE		1				

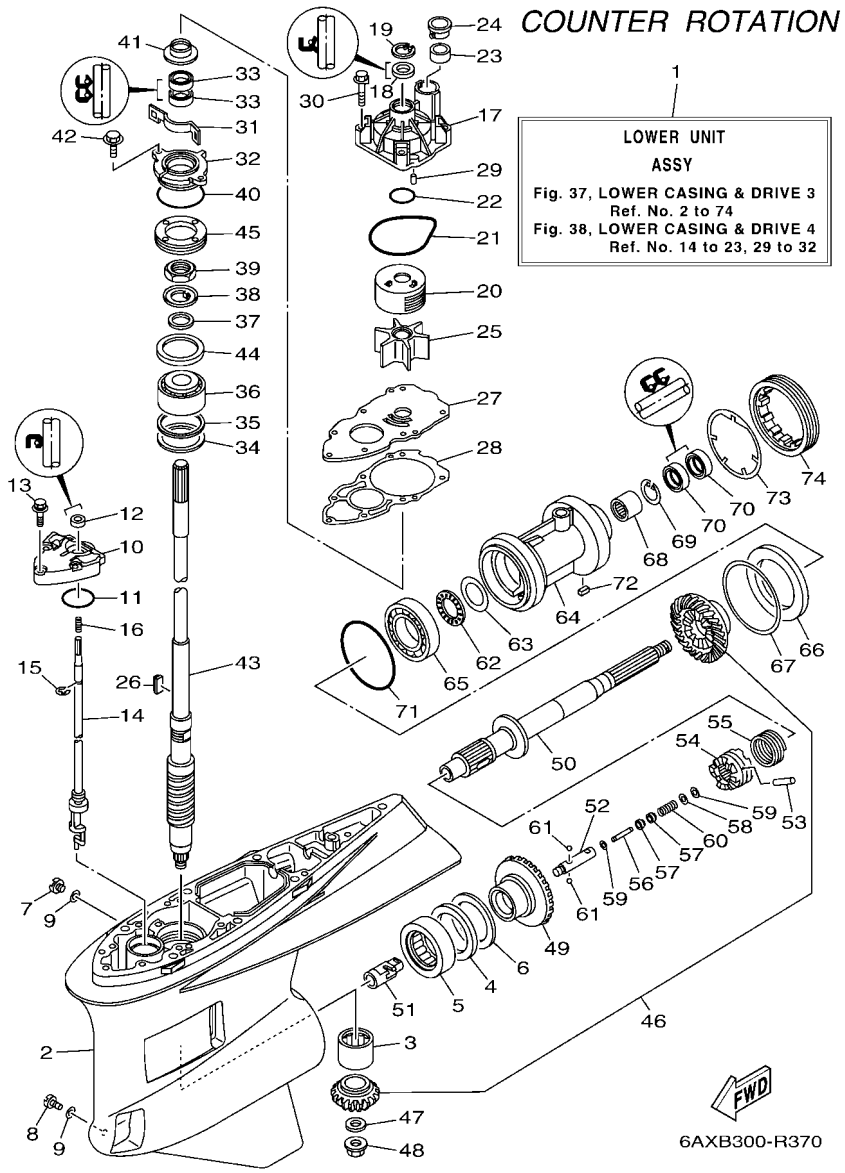

FIG. 37 LOWER CASING & DRIVE 3 — BOITIER D'HELICE TRANSMISSION3

REF. NO.	PART NO. N° PIECES	DESCRIPTION DESCRIPTION	6AWD	6AXD				REMARKS REMARQUES
21	93210–94003	O-RING JOINT TORIQUE		1				
22	93210–37160	O-RING JOINT TORIQUE		1				
23	6AW–44365–00	DAMPER, WATER SEAL 1 JOINT, TUBE D'EAU 1		1				
24	6AW–44312–00	COVER, WATER PUMP HOUSING COUVERCLE		1				
25	6AW–44352–00	IMPELLER TURBINE		1				
26	6AW–44336–00	KEY CLAVETTE		1				
27	6AW–44323–00	OUTER PLATE, CARTRIDGE PLAQUE EXTERIEURE		1				
28	6AW–44315–00	GASKET, WATER PUMP JOINT, POMPE A EAU		1				
29	93606–12019	PIN, DOWEL GOUPILLE		2				
30	90119–08M14	BOLT, WITH WASHER BOULON, AVEC RONDELLE		4				
31	6AW–45723–00	PLATE, SEAL PLAQUE, JOINT		1				
32	6AW–45335–00–CA	HOUSING, OIL SEAL LOGEMENT DE JOINT SPY		1				
33	93101–28018	OIL SEAL JOINT SPY		2				
34	90201–68008	WASHER, PLATE RONDELLE, PLATE		1				
35	6AW–45587–00	SHIM (T:0.10MM) CALE (T:0.10MM)		1				UR UR
	6AW–45587–10	SHIM (T:0.12MM) CALE (T:0.12MM)		1				UR UR
	6AW–45587–20	SHIM (T:0.15MM) CALE (T:0.15MM)		1				UR UR
	6AW–45587–30	SHIM (T:0.18MM) CALE (T:0.18MM)		1				UR UR
	6AW–45587–40	SHIM (T:0.30MM) CALE (T:0.30MM)		1				UR UR
	6AW–45587–50	SHIM (T:0.40MM) CALE (T:0.40MM)		1				UR UR
	6AW–45587–60	SHIM (T:0.50MM) CALE (T:0.50MM)		1				UR UR
36	93399–99962	BEARING ROULEMENT		1				
37	90201–301U7	WASHER, PLATE RONDELLE, PLATE		1				
38	90214–30003	WASHER, CLAW RONDELLE, A GRIFFES		1				
39	90170–30M18	NUT ECROU		1				
40	93210–69MG6	O-RING JOINT TORIQUE		1				
41	6AW–45344–00	COVER, OIL SEAL FLASQE, JOINT D'HUILE		1				

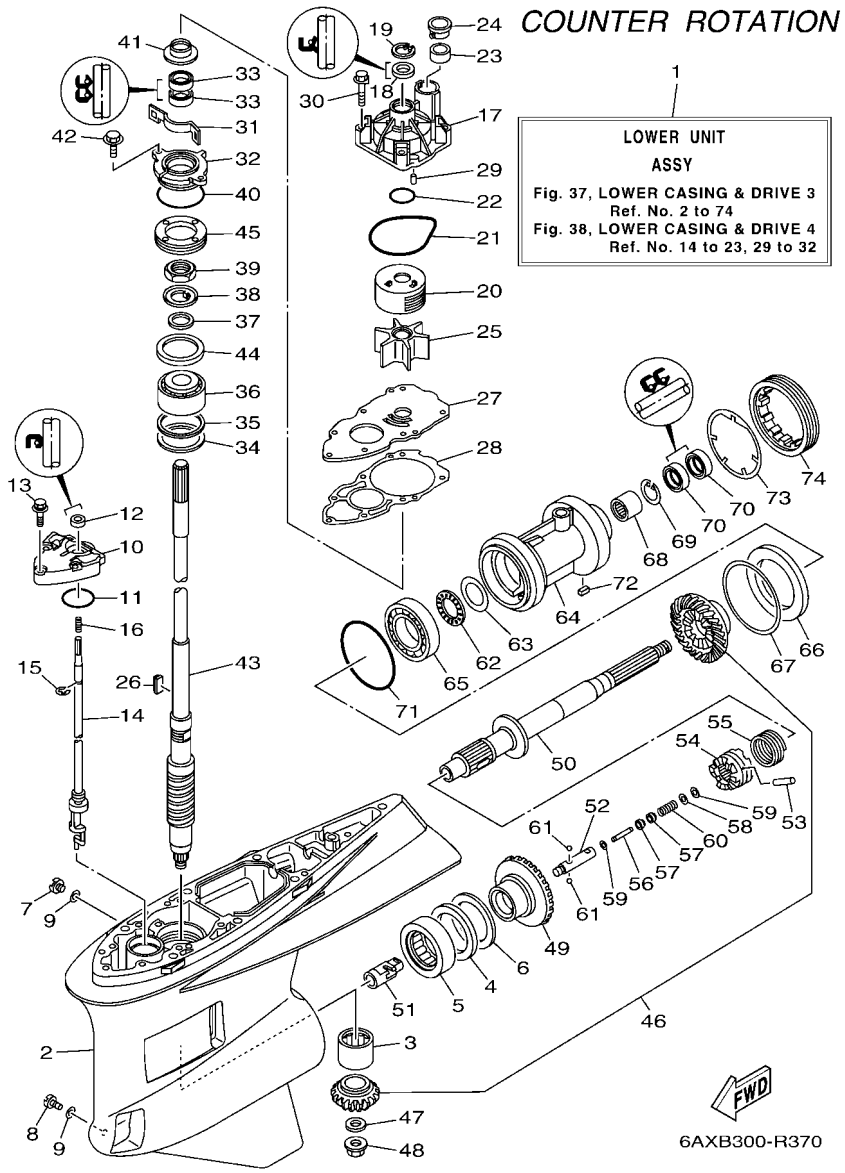

FIG. 37 LOWER CASING & DRIVE 3 — BOITIER D'HELICE TRANSMISSION3

REF. NO.	PART NO. N° PIECES	DESCRIPTION DESCRIPTION	6AWD	6AXD				REMARKS REMARQUES
42	97E95–08520	BOLT, HEXAGON W/W DEEP RECESS VIS HEXAGONAL AVC RONDELLE		2				
43	6AW–45501–00	DRIVE SHAFT COMP. ARBRE MOTEUR COMP.		1				X(25.1") X(25.1")
	6AW–45501–10	DRIVE SHAFT COMP. ARBRE MOTEUR COMP.		1				U(30.1") U(30.1")
44	6T5–45539–00	SPACER 2 ENTRETOISE 2		1				
45	6AW–45244–00	NUT ECROU		1				
46	6AX–45550–00	GEAR SET KIT, PIGNON		1				
47	90201–18023	WASHER, PLATE RONDELLE, PLATE		1				
48	90179–18009	NUT ECROU		1				
49	6AX–45560–02	GEAR 1 (26T) PIGNON 1 (26T)		1				
50	6AX–45611–01	SHAFT, PROPELLER ARBRE, HELICE		1				
51	6AX–45641–00	SHIFTER EMBRAYAGE		1				
52	61A–45634–01	SLIDE, SHIFT CONTRE-POUSSOIR		1				
53	6AW–45632–00	PIN, CROSS GOUPILLE DE CRABOT		1				
54	6AW–45631–00	CLUTCH, DOG CRABOT		1				
55	6AW–45633–00	RING, CROSS PIN JONC, GOUPILLE CRABOT		1				
56	6H1–45668–00	SHAFT, FREE 1 AXE 1		1				
57	61A–45635–00	PLUNGER, SHIFT POUSSOIR D'EMBRAYAGE		2				
58	90201–02M00	WASHER, PLATE RONDELLE, PLATE		1				
59	90183–02M03	NUT, SPRING ECROU, RESSORT		2				
60	90501–10M77	SPRING, COMPRESSION RESSORT, COMPRESSION		1				
61	93501–04011	BALL BILLE		2				
62	93341–440U5	BEARING CERVEAUX DE DIRECTION		1				
63	6K1–45578–01	SHIM (T:0.10MM) CALE (T:0.10MM)		1				UR UR
	6K1–45578–10	SHIM (T:0.12MM) CALE (T:0.12MM)		1				UR UR
	6K1–45578–20	SHIM (T:0.15MM) CALE (T:0.15MM)		1				UR UR
	6K1–45578–30	SHIM (T:0.18MM) CALE (T:0.18MM)		1				UR UR
	6K1–45578–40	SHIM (T:0.30MM) CALE (T:0.30MM)		1				UR UR

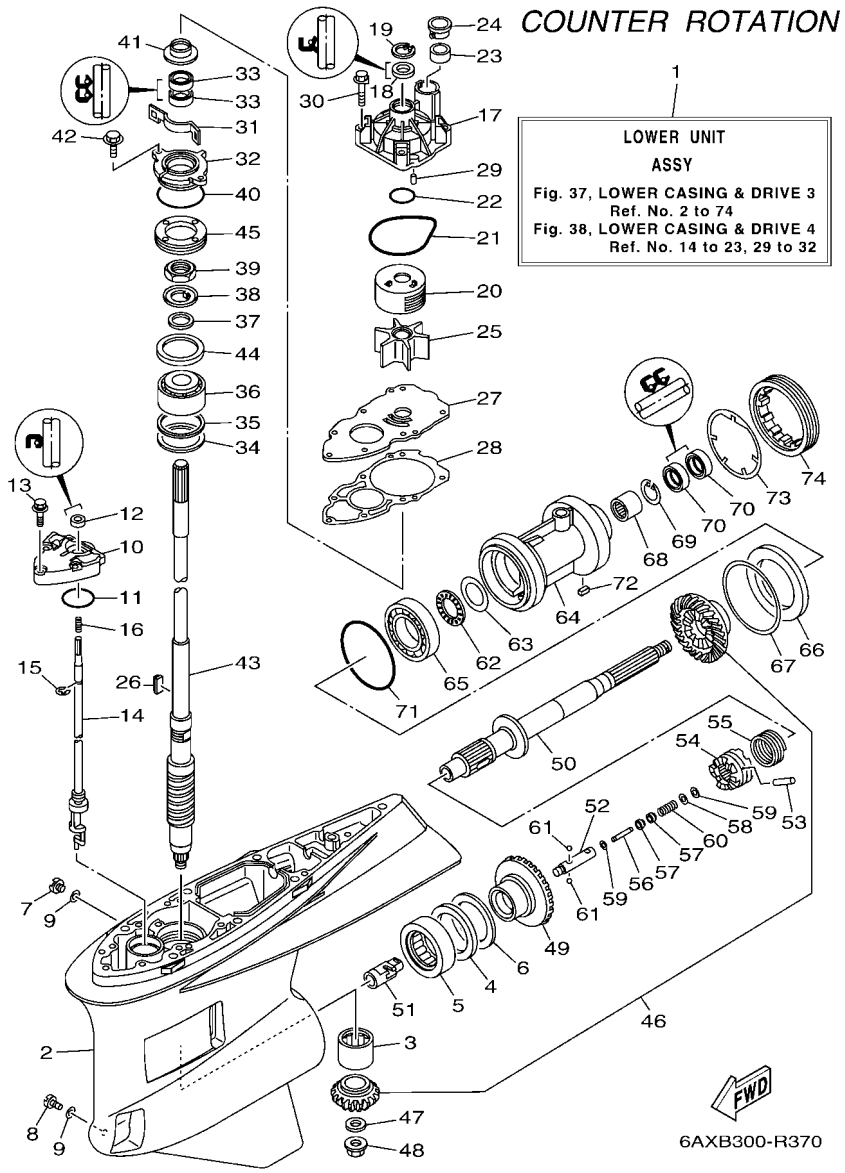

FIG. 37 LOWER CASING & DRIVE 3 — BOITIER D'HELICE TRANSMISSION3

REF. NO.	PART NO. N° PIECES	DESCRIPTION DESCRIPTION	6AWD	6AXD				REMARKS REMARQUES
63	6K1–45578–50	SHIM (T:0.40MM) CALE (T:0.40MM)		1				UR UR
	6K1–45578–60	SHIM (T:0.50MM) CALE (T:0.50MM)		1				UR UR
64	6AX–45332–00	HOUSING, BEARING FLASQUE, ROULEMENT		1				
65	93332–000A2	BEARING ROULEMENT		1				
66	6AW–45576–00	WASHER, THRUST 2 RONDELLE DE CALAGE 2		1				
67	6AW–45577–00	SHIM (T:0.10MM) CALE (T:0.10MM)		1				UR UR
	6AW–45577–10	SHIM (T:0.12MM) CALE (T:0.12MM)		1				UR UR
	6AW–45577–20	SHIM (T:0.15MM) CALE (T:0.15MM)		1				UR UR
	6AW–45577–30	SHIM (T:0.18MM) CALE (T:0.18MM)		1				UR UR
	6AW–45577–40	SHIM (T:0.30MM) CALE (T:0.30MM)		1				UR UR
	6AW–45577–50	SHIM (T:0.40MM) CALE (T:0.40MM)		1				UR UR
	6AW–45577–60	SHIM (T:0.50MM) CALE (T:0.50MM)		1				UR UR
68	93311–63591	BEARING ROULEMENT		1				
69	99009–47500	CIRCLIP CIRCLIP		1				
70	93101–35018	OIL SEAL JOINT SPY		2				
71	93211–10232	O-RING JOINT TORIQUE		1				
72	90282–05008	KEY, STRAIGHT CLAVETTE, DROITE		1				
73	6AW–45383–00	WASHER, CLAW FREIN D'ECROU		1				
74	6AW–45384–00	NUT ECROU		1				

FIG. 38 LOWER CASING & DRIVE 4 — BOITIER D'HELICE TRANSMISSION4

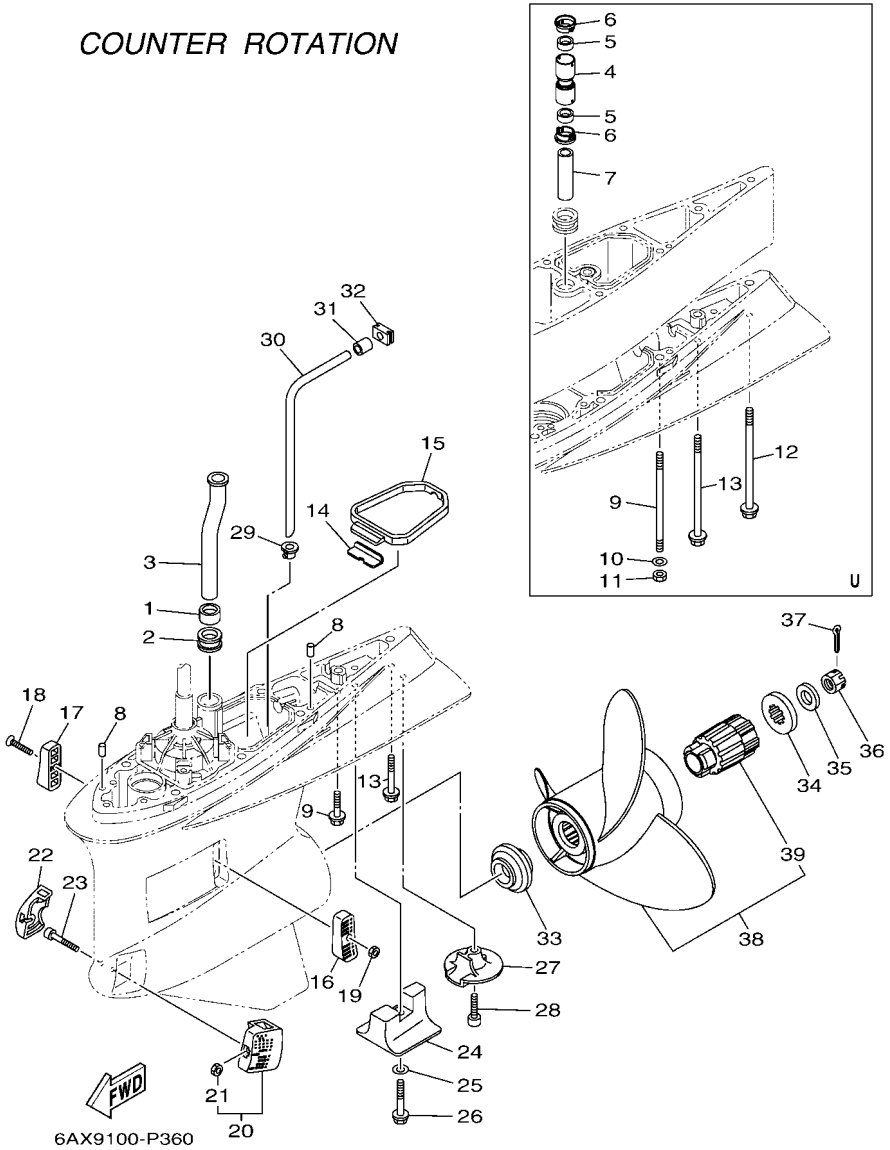

REF. NO.	PART NO. N° PIECES	DESCRIPTION DESCRIPTION	6AWD	6AXD				REMARKS REMARQUES
1	6AW–44365–00	DAMPER, WATER SEAL 1 JOINT, TUBE D'EAU 1		1				
2	6AW–44366–00	DAMPER, WATER SEAL 2 JOINT, TUBE D'EAU 2		1				
3	6AW–44361–00	TUBE, WATER 1 TUBE D'EAU 1		1				
4	6CE–44362–00	TUBE, WATER 2 TUBE D'EAU 2		1				U(30.1") U(30.1")
5	6AW–44365–00	DAMPER, WATER SEAL 1 JOINT, TUBE D'EAU 1		2				U(30.1") U(30.1")
6	6AW–44312–00	COVER, WATER PUMP HOUSING COUVERCLE		2				U(30.1") U(30.1")
7	6AW–44363–00	TUBE, WATER 3 TUBE D'EAU 3		1				U(30.1") U(30.1")
8	93608–12M05	PIN, DOWEL AXE		2				
9	90119–10038	BOLT, WITH WASHER BOULON, AVEC RONDELLE		7				X(25.1") X(25.1")
	90116–10041	BOLT, STUD GOUJON		6				U(30.1") U(30.1")
10	90201–10048	WASHER, PLATE RONDELLE, PLATE		6				U(30.1") U(30.1")
11	90170–10009	NUT ECROU		6				U(30.1") U(30.1")
12	90119–10008	BOLT, WITH WASHER BOULON, AVEC RONDELLE		1				U(30.1") U(30.1")
13	97E75–10570	BOLT, HEXAGON W/W DEEP RECESS VIS HEXAGONAL AVC RONDELLE		1				X(25.1") X(25.1")
	90119–10009	BOLT, WITH WASHER BOULON, AVEC RONDELLE		1				U(30.1") U(30.1")
14	61A–45376–00	GUIDE, SEAL DAMPER BUTEE, JOINT CAOUTCHOUC		1				
15	6AW–45375–00	DAMPER, SEAL BOURRELET, CAOUTCHOUC		1				
16	6AW–45214–00	COVER, WATER INLET 1 GRILLE, ENTREE D'EAU 1		1				
17	6AW–45215–00	COVER, WATER INLET 2 GRILLE, ENTREE D'EAU 2		1				
18	90152–05003	SCREW, COUNTERSUNK VIS, TETE NOYEE		1				
19	90185–05002	NUT, NYLON ECROU,AUTO-BLOQUANT		1				
20	6AW–45224–00	COVER, WATER INLET 3 GRILLE, ENTREE D'EAU 3		1				
21	90185–05002	.NUT, NYLON .ECROU,AUTO-BLOQUANT		1				
22	6AW–45225–00	COVER, WATER INLET 4 GRILLE, ENTREE D'EAU 4		1				
23	90110–05050	BOLT, HEXAGON SOCKET HEAD BOULON, TETE HEXAGONALE CREUSE		1				
24	6AW–45373–00	ANODE ANODE		1				
25	92990–10300	WASHER RONDELLE, PLATE		1				

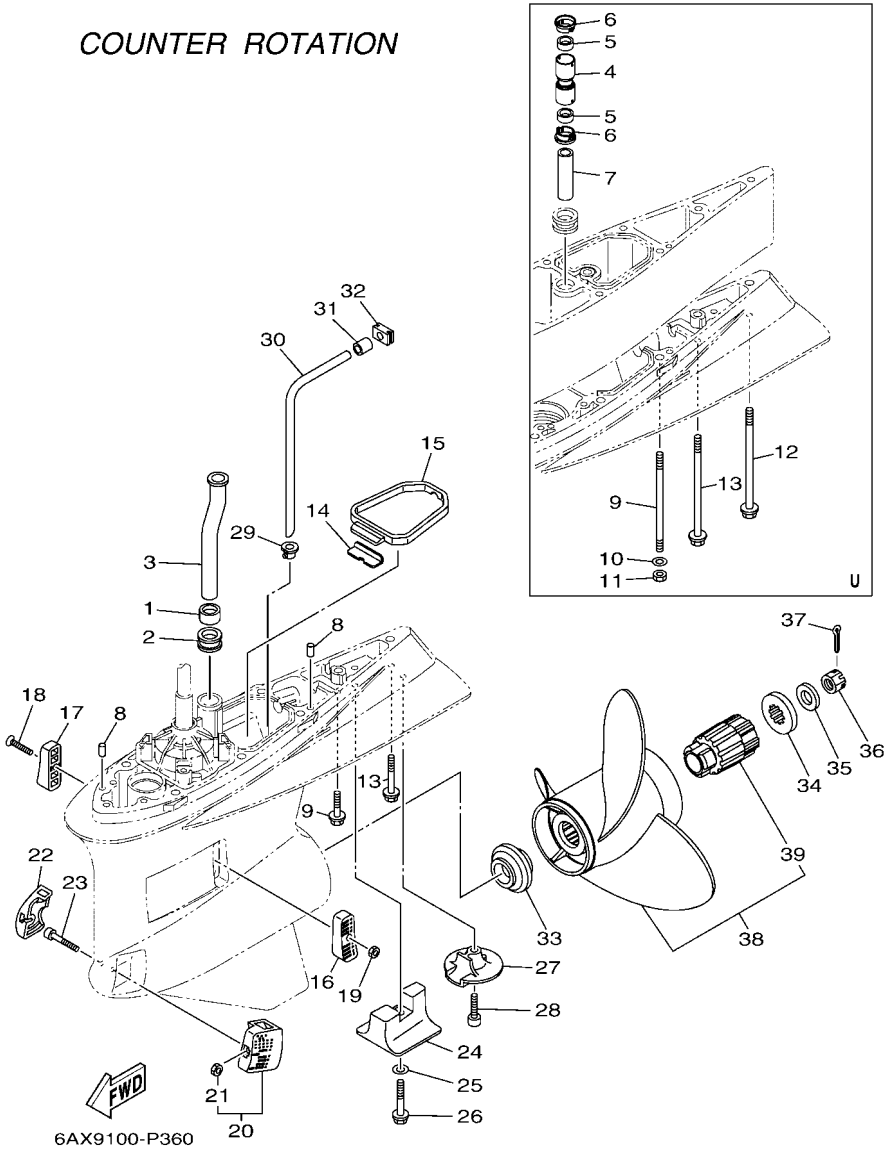

FIG. 38 LOWER CASING & DRIVE 4 — BOITIER D'HELICE TRANSMISSION4

REF. NO.	PART NO. N° PIECES	DESCRIPTION DESCRIPTION	6AWD	6AXD				REMARKS REMARQUES
26	90105–10257	BOLT, FLANGE BOULON, A COLLERETTE		1				
27	6AW–45619–00	CAP CAPUCHON		1				
28	90110–10018	BOLT, HEXAGON SOCKET HEAD BOULON, TETE HEXAGONALE CREUSE		1				
29	6AW–44367–00	DAMPER, WATER SEAL 3 JOINT TUBE D'EAU 3		1				
30	6AW–44362–00	TUBE, WATER 2 TUBE D'EAU 2		1				
31	6AW–44375–00	GROMMET, WATER TUBE 1 PASSE-FIL, TUBE D'EAU 1		1				
32	6AW–44376–00	GROMMET, WATER TUBE 2 PASSE-FIL, TUBE D'EAU 2		1				
33	6AW–45987–00	SPACER 1 ENTRETOISE 1		1				
34	6AW–45997–00	SPACER 2 ENTRETOISE 2		1				
35	90201–19M01	WASHER, PLATE RONDELLE, PLATE		1				
36	90171–18M04	NUT, CASTLE ECROU, CRENELE		1				
37	91490–40030	PIN. COTTER GOUPILLE		1				
38	6AX–45970–20	PROPELLER (3X16-1/4"X15"-XL) HELICE (3X16-1/4"X15"-XL)		1				UR SDS PROP. UR SDS PROP.
	6AX–45972–20	PROPELLER (3X16-1/4"X17"-XL) HELICE (3X16-1/4"X17"-XL)		1				UR SDS PROP. UR SDS PROP.
	6AX–45974–20	PROPELLER (3X15-1/2"X19"-XL) HELICE (3X15-1/2"X19"-XL)		1				UR SDS PROP. UR SDS PROP.
	6AX–45976–20	PROPELLER (3X15-1/4"X21"-XL) HELICE (3X15-1/4"X21"-XL)		1				UR SDS PROP. UR SDS PROP.
	6AX–45978–20	PROPELLER (3X15-1/4"X23"-XL) HELICE (3X15-1/4"X23"-XL)		1				UR SDS PROP. UR SDS PROP.
39	6AW–45C81–10	.DAMPER RUBBER, PROPELLER 1 .AMORTISSEUR HELICE 1		1				

FIG. 39 OPTIONAL PARTS — PIECES OPTIONNELLES

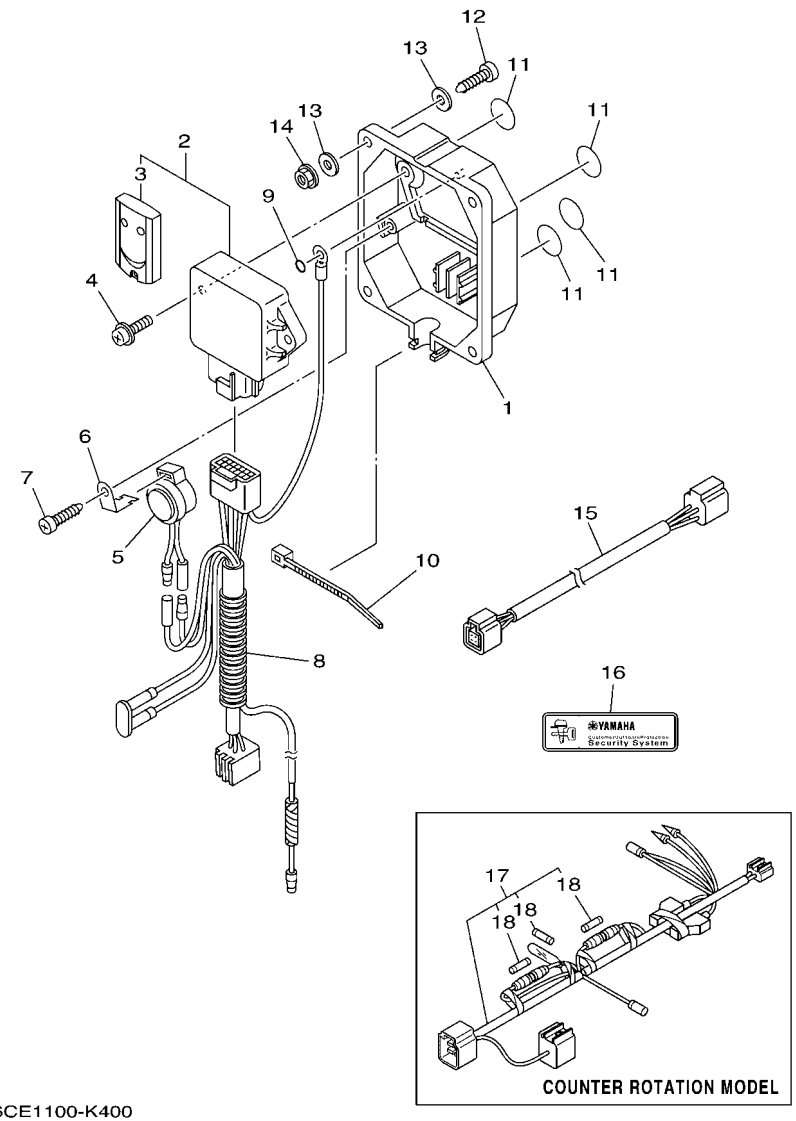

6CE1100-K400

REF. NO.	PART NO. N° PIECES	DESCRIPTION DESCRIPTION	6AWD	6AXD				REMARKS REMARQUES
1	6Y8–86267–00	CASE COMPLETE 1 CARTER (ENS.) 1	1					
2	6Y8–86260–03	REMOTE CONTROL UNIT ASSY UNITE DE TELECOMMANDE (ENS.)	1					
3	6AA–86261–01	.XMTR. COMP. .XMTR. COMP.	2					
4	97980–06216	SCREW, WITH WASHER VIS, AVEC RONDELLE	2					
5	6X4–83383–00	BUZZER RONFLEUR	1					
6	6X4–83386–00	STAY, BUZZER SUPPOR, RONFLEUR	1					
7	97780–60620	SCREW, TAPPING VIS, TETE BOMBEE	1					
8	6Y8–82509–10	WIRE, SUB LEAD FIL, SECONDAIRE	1					
9	93210–04279	O-RING JOINT TORIQUE	1					
10	90465–11M10	CLAMP BRIDE	1					
11	6Y8–8454G–00	PATCH 1 TAMPON 1	4					
12	90167–06M00	SCREW, TAPPING VIS, TETE FRAISEE	4					UR UR
	97880–06035	SCREW, PAN HEAD VIS, TETE TRONCONIQUE	4					UR UR
13	90201–06M30	WASHER, PLATE RONDELLE, PLATE	8					
14	95780–06300	NUT, FLANGE ECROU	4					
15	6Y8–82521–11	2FT PIGTAIL BUS FAISCEAU (L: 2FT.)	1					
16	6Y8–48277–00	STICKER 1 ETIQUETTE 1	4					
17	6Y8–81315–01	LEAD WIRE ASSY FIL		1				AP AP
18	6TA–82151–00	.FUSE(5A) .FUSIBLE (5A)		3				

FIG. 40 REPAIR KIT 1 — KITS DE REPARATION 1

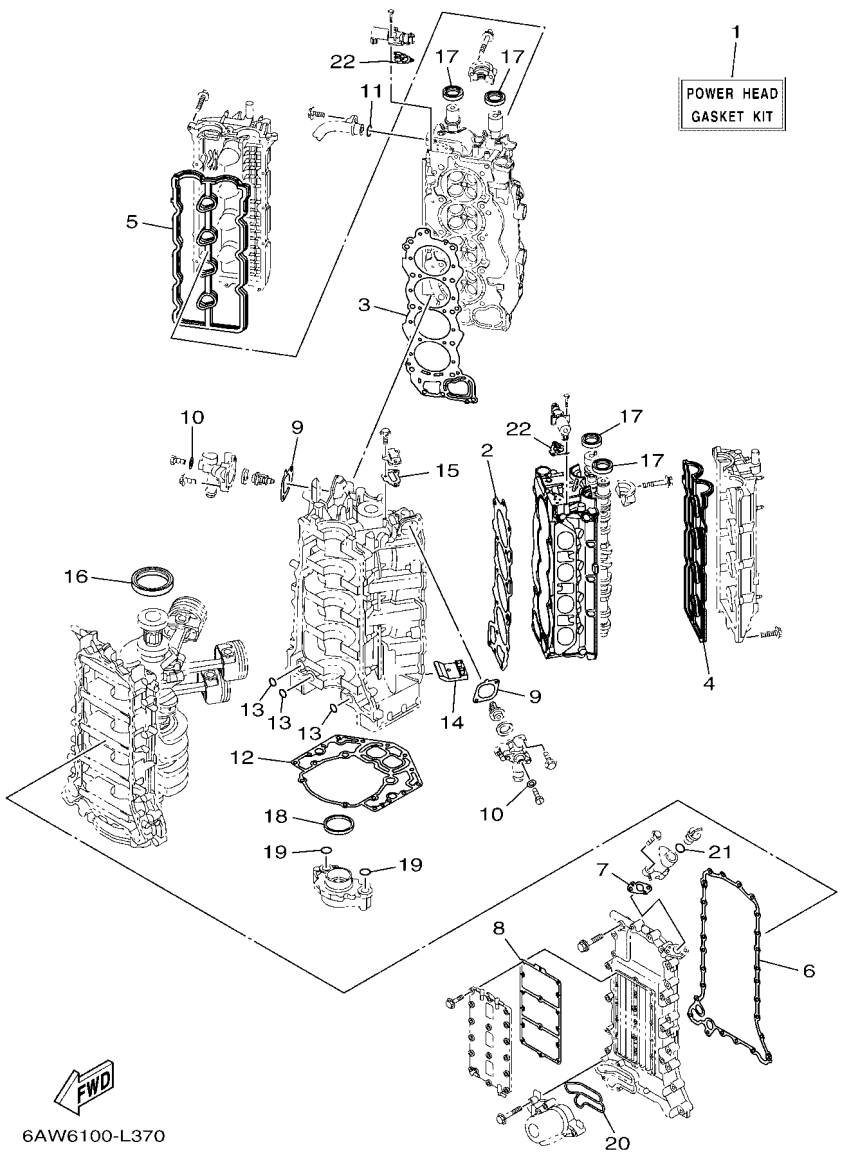

REF. NO.	PART NO. N° PIECES	DESCRIPTION DESCRIPTION	6AWD	6AXD				REMARKS REMARQUES
1	6AW–W0001–01	POWER HEAD GASKET KIT POCHETTE DE JINTS TETE MOTRICE	1	1				
2	6AW–11181–00	.GASKET, CYLINDER HEAD 1 .JOINT, DE CULASSE 1	1	1				
3	6AW–11182–00	.GASKET, CYLINDER HEAD 2 .JOINT, CULASSE 2	1	1				
4	6AW–11193–10	.GASKET, HEAD COVER 1 .JOINT, COUVERCLE DE CULASSE 1	1	1				
5	6AW–11194–10	.GASKET, HEAD COVER 2 .JOINT, COUVERCLE DE CULASSE 2	1	1				
6	6AW–15451–00	.GASKET, CRANKCASE COVER 1 .JOINT, COUVERCLE DE CARTER 1	1	1				
7	6AW–15364–00	.GASKET, OIL PLUG .JOINT, PLOT D'HUILE	1	1				
8	6AW–15461–00	.GASKET, CRANKCASE COVER 2 .JOINT, COUVERCLE DE CARTER 2	1	1				
9	6AW–12427–00	.GASKET, HOUSING COVER 1 .JOINT, COUVERCLE DE CARTER 1	2	2				
10	90430–05002	.GASKET .JOINT	2	2				
11	93210–207A0	.O-RING .JOINT TORIQUE	1	1				
12	6AW–11351–00	.GASKET, CYLINDER .JOINT, D'EMBASE	1	1				
13	93210–26658	.O-RING .JOINT TORIQUE	3	3				
14	6AW–14664–00	.GROMMET, WATER SHUT .PASSE-FIL	2	2				
15	6AW–11381–00	.GASKET 1 .JOINT 1	1	1				
16	93102–85004	.OIL SEAL .JOINT SPY	1	1				
17	93102–38008	.OIL SEAL .JOINT SPY	4	4				
18	69J–11355–00	.SEAL, CYLINDER 1 .JOINT, SPY CYLINDRE	1	1				
19	93210–26658	.O-RING .JOINT TORIQUE	2	2				
20	6AW–13477–00	.GASKET .JOINT	1	1				
21	93210–24M79	.O-RING .JOINT TORIQUE	1	1				
22	6CB–1242F–00	.GASKET, FILTER .JOINT, FILTRE	2	2				

FIG. 41 REPAIR KIT 2 — KITS DE REPARATION 2

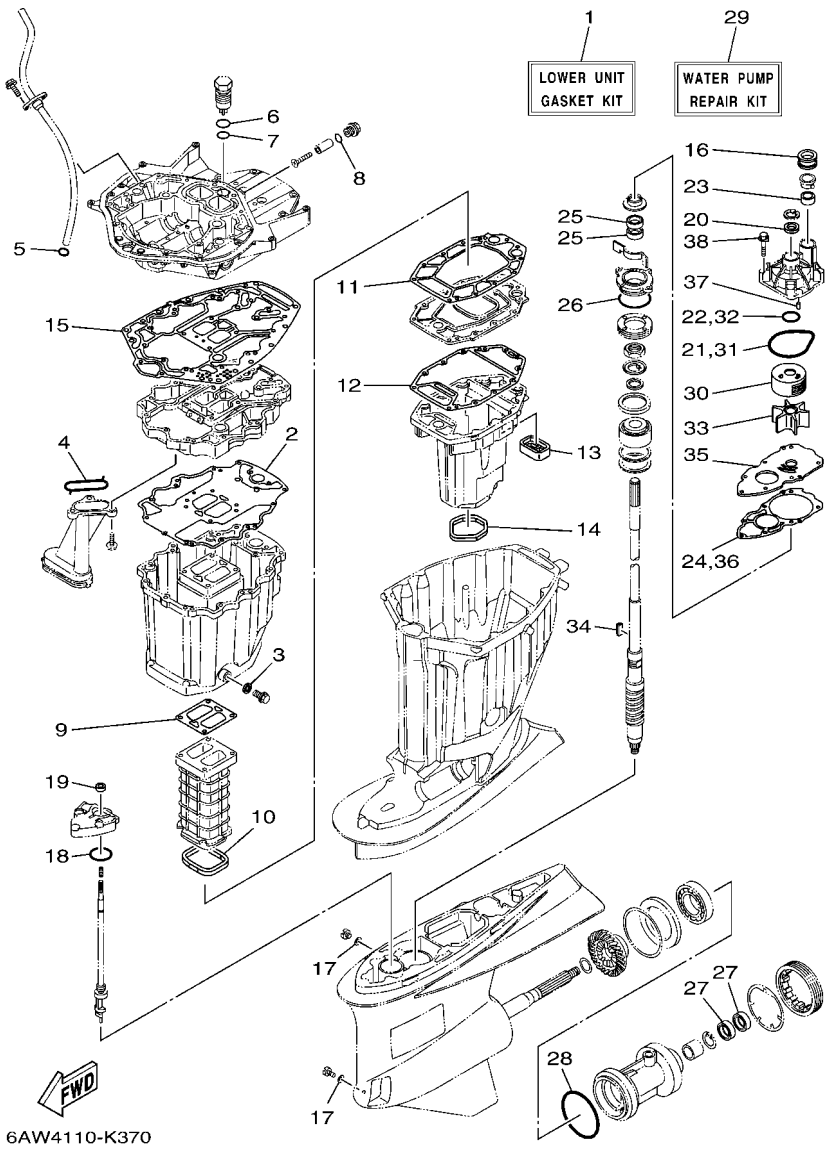

REF. NO.	PART NO. N° PIECES	DESCRIPTION DESCRIPTION	6AWD	6AXD				REMARKS REMARQUES
1	6AW–W0001–21	LOWER UNIT GASKET KIT POCHETTE DE JOINTS EMBASE	1	1				
2	6AW–15312–00	.GASKET, OIL PAN .JOINT DE VENTILATEUR D'HUILE	1	1				
3	90430–14M09	.GASKET .JOINT	1	1				
4	6AW–13415–00	.SEAL, OIL STRAINER .JOINT, FILTRE A HUILE	1	1				
5	93210–19MJ3	.O-RING .JOINT TORIQUE	1	1				
6	93210–347A1	.O-RING .JOINT TORIQUE	1	1				
7	93210–28543	.O-RING .JOINT TORIQUE	1	1				
8	93210–19758	.O-RING .JOINT TORIQUE	1	1				
9	6AW–41134–02	.GASKET, EXHAUST MANIFOLD .JOINT, PIPE D'ECHAPPEMENT	1	1				
10	6AW–41138–00	.SEAL, EXT. 1 .JOINT DE GROUPE 1	1	1				
11	6AW–41135–00	.GASKET, EXHAUST MANIFOLD .JOINT, PIPE D'ECHAPPEMENT	1	1				
12	6AW–41136–00	.GASKET, EXHAUST MANIFOLD 4 .JOINT, PIPE D'ECHAPPEMENT 4	1	1				
13	6AW–45127–00	.SEAL .JOINT	1	1				
14	69J–45123–00	.GASKET, MUFFLER .JOINT, POT DE DETENTE	1	1				
15	6AW–45113–00	.GASKET, UPPER CASING .JOINT, TUBE D'ARBRE	1	1				
16	6AW–44366–00	.DAMPER, WATER SEAL 2 .JOINT, TUBE D'EAU 2	1	1				
17	90430–08003	.GASKET .JOINT	2	2				
18	93210–48214	.O-RING .JOINT TORIQUE	1	1				
19	93101–12M70	.OIL SEAL .JOINT SPY	1	1				
20	93109–24001	.OIL SEAL .JOINT SPY	1	1				
21	93210–94003	.O-RING .JOINT TORIQUE	1	1				
22	93210–37160	.O-RING .JOINT TORIQUE	1	1				
23	6AW–44365–00	.DAMPER, WATER SEAL 1 .JOINT, TUBE D'EAU 1	1	1				
24	6AW–44315–00	.GASKET, WATER PUMP .JOINT, POMPE A EAU	1	1				
25	93101–28018	.OIL SEAL .JOINT SPY	2	2				
26	93210–69MG6	.O-RING .JOINT TORIQUE	1	1				
27	93101–35018	.OIL SEAL .JOINT SPY	2	2				

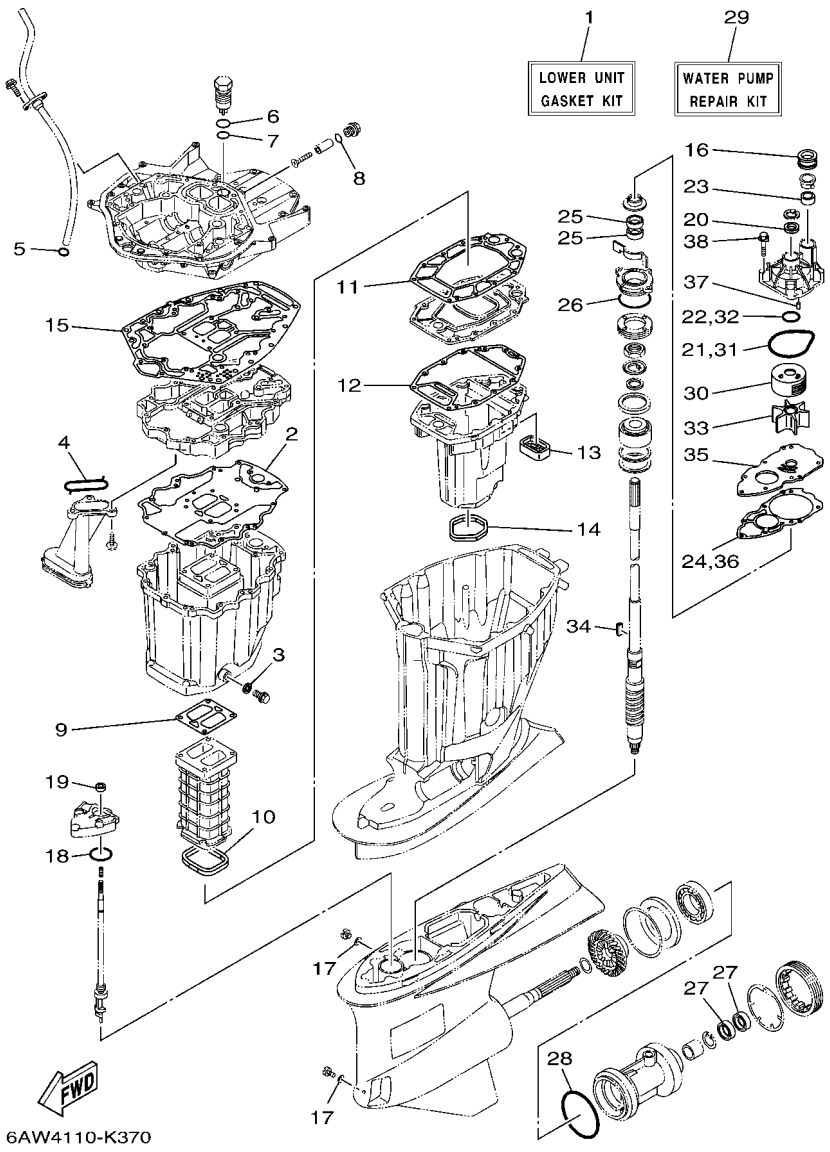

FIG. 41 REPAIR KIT 2 — KITS DE REPARATION 2

REF. NO.	PART NO. N° PIECES	DESCRIPTION DESCRIPTION	6AWD	6AXD				REMARKS REMARQUES
28	93211–10232	.O-RING .JOINT TORIQUE	1	1				
29	6AW–W0078–00	WATER PUMP REPAIR KIT KIT DE REPARATION DE LA POMPE	1	1				
30	6AW–44322–00	.INSERT, CARTRIDGE .CUVETTE	1	1				
31	93210–94003	.O-RING .JOINT TORIQUE	1	1				
32	93210–37160	.O-RING .JOINT TORIQUE	1	1				
33	6AW–44352–00	.IMPELLER .TURBINE	1	1				
34	6AW–44336–00	.KEY .CLAVETTE	1	1				
35	6AW–44323–00	.OUTER PLATE, CARTRIDGE .PLAQUE EXTERIEURE	1	1				
36	6AW–44315–00	.GASKET, WATER PUMP .JOINT, POMPE A EAU	1	1				
37	93606–12019	.PIN, DOWEL .GOUPILLE	2	2				
38	90119–08M14	.BOLT, WITH WASHER .BOULON, AVEC RONDELLE	4	4				

NUMERICAL INDEX
INDEX NUMERIQUE

PART NO. N° PIECES	REF. NO.
6AW–11000–01	3 – 1
6AW–11110–10	5 – 2
6AW–11120–10	5 – 10
6S5–11133–10	5 – 3
	5 – 11
6AW–11181–00	5 – 23
	40 – 2
6AW–11182–00	5 – 28
	40 – 3
6AW–11186–10	6 – 1
6AW–11187–10	6 – 3
6AW–11188–00	12 – 17
6AW–11191–10	5 – 29
6AW–11192–10	5 – 32
6AW–11193–10	5 – 30
	40 – 4
6AW–11194–10	5 – 33
	40 – 5
6AW–11197–00	33 – 20
67F–11301–00	5 – 17
6AW–1131M–00–9S	3 – 34
6E5–11325–00	1 – 14
	22 – 5
63P–11325–01	1 – 1
	3 – 18
67F–11325–01	1 – 6
	5 – 18
63P–11325–11	1 – 19
	33 – 27
67F–11328–00	5 – 19
6AW–1132P–00	1 – 4
	3 – 37
6AW–1132R–00	1 – 3
	3 – 27
6AW–1132S–00	1 – 16
	33 – 22
6AW–1132T–00	1 – 17
	33 – 24
6AW–1132U–00	1 – 18
	33 – 25
6AW–11351–00	3 – 31
	40 – 12
69J–11355–00	34 – 15
	40 – 18
6AW–1135A–00	6 – 8
6AW–11371–10	33 – 14
6H1–11372–00	33 – 2
6AW–11378–00	7 – 13
6AW–11381–00	3 – 35
	40 – 15
6AW–11411–10	4 – 1
6AW–11416–00	4 – 4
6AW–11416–10	4 – 4
6AW–11416–20	4 – 4
6AW–11416–30	4 – 4
6AW–11416–40	4 – 4
6AW–11417–00	4 – 5
6AW–11417–10	4 – 5
6AW–11417–20	4 – 5
6AW–11417–30	4 – 5
6AW–11417–40	4 – 5
6AW–11426–01	4 – 6
6AW–11427–01	4 – 7
6AW–11537–00	8 – 13
6AW–11567–00	8 – 14
6P2–11590–01	8 – 25
6AW–11603–00	4 – 11
6AW–11631–10–93	4 – 10
63P–11633–10	4 – 12
63P–11634–00	4 – 13
63P–11654–10	4 – 9
6AW–11656–00	4 – 14
6AW–11656–10	4 – 14
6AW–11656–20	4 – 14
6AW–11656–30	4 – 14
6CB–12111–00	8 – 1
6CB–12113–00	8 – 4
51Y–12119–00	8 – 7
6CB–12121–00	8 – 2
6AW–12171–10	8 – 9
6AW–12172–10	8 – 11
6AW–12181–10	8 – 10
6AW–12182–10	8 – 12
69J–12233–00	33 – 17
6AW–12411–00	1 – 2
	3 – 20
6AW–12412–00	3 – 21
6AW–12413–00–9S	3 – 22
6AW–1241B–00–9S	3 – 24
6AW–12422–00–9S	3 – 23
6AW–12427–00	3 – 26
	40 – 9
6AW–1242B–00–9S	3 – 25
6CB–1242F–00	6 – 6
	40 – 22
6AW–1243A–00	7 – 1
6AW–1243E–00	7 – 4
6AW–1243F–00	33 – 6
6AW–1244G–00	7 – 7
6AW–1244H–00	33 – 5
6AW–1244J–00	7 – 12
6AW–12476–00	7 – 10
6AW–12477–00	7 – 2
6AW–12482–10	11 – 31
6AW–12483–00	11 – 28
6AW–12484–00	7 – 5
6AW–12491–10	7 – 8
6AW–12572–00	26 – 1
6AW–12576–20	11 – 17
6AW–12577–00	11 – 21
6AW–12578–00	11 – 22
6AW–12579–10	11 – 24
6R3–12581–00	26 – 3
6AW–12582–00	26 – 4
6R3–12583–00	26 – 5
6AW–12588–00	11 – 32
6AW–12589–00	11 – 14
6P2–12615–00	8 – 22
6P2–12623–00	8 – 17
	8 – 20
6AW–12645–00	8 – 16
6AW–1264A–00	8 – 19
6P2–12663–00	8 – 18
	8 – 21
6CB–13016–00	1 – 9
	14 – 5
6AW–13119–00	34 – 13
6AW–13132–00	14 – 26
6AW–13160–10	13 – 1
6AW–13161–10	13 – 2
6AW–13170–10	13 – 7
6AW–13171–10	13 – 8
6AW–13300–02	34 – 11
6CB–13329–00	34 – 12
6AW–13411–00	34 – 7
6AW–13415–00	34 – 9
	41 – 4
6AW–13437–62	18 – 17
N26–13440–02	1 – 5
	3 – 41
6AW–13446–00–9S	3 – 43
6AW–13477–00	3 – 44
	40 – 20
6AW–13490–01	34 – 22
6AW–13532–00	15 – 8
6AW–13545–10	11 – 4
6AW–13547–10	11 – 10
6CB–13548–00	11 – 8
6AW–13548–10	11 – 6
6AW–13556–00	12 – 4
6AW–13557–00	12 – 5
6P2–13573–00	12 – 11
68V–13577–00	15 – 6
	15 – 17
6AW–13577–10	13 – 5
	13 – 11
6P2–13578–00	12 – 8
6P2–13588–00	12 – 7
6CB–13593–00	14 – 23
6AW–13631–00	34 – 14
6AW–13641–10	9 – 6
	9 – 12
6AW–13645–00	9 – 7
	9 – 13
6AW–13646–00	9 – 8
	9 – 14
6AW–13711–01	12 – 3
69J–13716–00	14 – 22
6AW–13750–03	12 – 1
6AW–13751–01	12 – 2
6AW–13761–00	13 – 3
	13 – 9
6AW–13781–00	14 – 30
6AW–13782–00	9 – 3
6AW–13784–00	14 – 33
6CB–13906–01	14 – 8
6AW–13907–10	14 – 24
63P–13915–00	1 – 10
	14 – 25
6AW–13971–30	15 – 12
6AW–13973–30	15 – 13
6AW–13974–30	15 – 14
6AW–1410B–00	13 – 4
	13 – 10
69J–14137–00	15 – 5
6CB–14146–00	14 – 10
6P2–14149–00	15 – 1
6AW–14180–22	14 – 1
6CB–14181–09	14 – 15
6AW–14182–11	14 – 2
6P2–14191–00	14 – 16
68V–14216–00	14 – 12
6CB–14216–00	14 – 6
6CB–14239–00	14 – 17
4N0–14251–00	12 – 13
68V–14356–00	12 – 12
6AW–14360–00	12 – 6
6P2–14386–00	14 – 37
6AW–14419–00	10 – 5
6AW–1441J–00	10 – 3
6CB–14429–01	14 – 19
63P–14435–00	19 – 20
6AW–14440–00	10 – 1
6AW–14445–00	10 – 12
6CB–1447B–00	14 – 29
68F–14485–00	11 – 23
6P2–14496–00	12 – 9
6CB–14546–00	14 – 28
6CB–14564–00	14 – 9
63P–14567–00	14 – 21
6AW–14664–00	3 – 33
	40 – 14
6AW–14711–00–9S	33 – 38
6AW–14750–00	26 – 29
6AW–1475A–10	11 – 2
6AW–1475E–00	26 – 31
6AW–1475F–00	26 – 34
6AW–1475G–00	33 – 3
68V–1475H–00	14 – 13
68V–1475J–00	14 – 14
6AW–1475J–00	33 – 4
6AW–14763–00	26 – 32
6AW–14764–00–CA	26 – 35
6CB–14984–00	1 – 11
	14 – 39
6CB–14985–00	14 – 27
6AW–15100–04	3 – 2
6AW–15142–00	5 – 35
6P2–15187–00	3 – 5
6AW–15311–00–CA	34 – 2
6AW–15312–00	34 – 1
	41 – 2
69J–15316–00	33 – 47
6AW–15319–00–9S	3 – 11
6AW–1531A–00	10 – 16
6AW–1531A–10	10 – 17
6AW–1532A–00	10 – 18
6AW–15362–01	34 – 18
6G8–15363–00	3 – 46
6AW–15364–00	3 – 12
6AW–15364–00	40 – 7
6AW–15373–00	10 – 11
6AW–15377–00	34 – 19
6AW–15393–00	10 – 14
6AW–15411–02–9S	3 – 7
6AW–15421–00–9S	3 – 15
6AW–15451–00	3 – 8
	40 – 6
6AW–15461–00	3 – 16
	40 – 8
6P2–15512–00	8 – 26
6AW–15544–00	8 – 30
69J–2134X–00	9 – 20
6AW–2134X–10	9 – 18
6E5–21744–00	11 – 7
	11 – 9
6P2–24170–00	9 – 17
69J–2419A–01	9 – 24
6CB–24217–00	14 – 7
6AW–24300–00	15 – 16
6AW–24300–10	15 – 15
5JW–24311–00	12 – 14
6AW–24311–11	16 – 3
6AW–24312–10	11 – 3
6AW–24313–10	16 – 19
66V–24314–00	26 – 10
6AW–24314–00	28 – 23
6AW–24314–10	28 – 21
6AW–24317–20	15 – 4
6AW–24323–20	15 – 2
6AW–24324–20	15 – 3
6E5–24351–51	16 – 4
6AW–24360–01	17 – 1
6G8–24376–00	28 – 26
6P2–24376–00	15 – 9
6CE–24376–01	11 – 13
	11 – 20
6AW–24377–01	16 – 2
688–24378–00	11 – 5
	11 – 30
6E5–24378–00	15 – 7
68V–24379–10	14 – 11
6CB–24410–01	14 – 31
6AW–24419–00	9 – 27
6AW–24422–00	16 – 20
6CB–24452–10	14 – 18
4SV–24453–00	14 – 34
6CB–24460–00	14 – 4

PART NO. N° PIECES	REF. NO.
6CB–24461–00	15 – 18
6P3–24469–00	16 – 9
6CB–24482–00	14 – 20
6AW–24491–10	14 – 32
6CB–24492–00	14 – 36
6CB–24501–01	1 – 8
	14 – 3
6P3–24519–00	16 – 8
6P3–24560–22	16 – 6
6P3–24562–21	16 – 7
6P3–24563–01	1 – 13
	16 – 11
6P3–24564–00	1 – 12
	16 – 10
6CB–24592–00	14 – 38
6AW–24596–00	16 – 15
69J–28100–02	16 – 25
67F–2812A–00	20 – 29
6AW–28199–7F–D0	16 – 26
6AW–28199–7F–E0	16 – 26
6AW–28199–7F–F0	16 – 26
6AW–28199–7F–G0	16 – 26
6AW–28199–7F–H0	16 – 26
6AW–28199–7F–S0	16 – 26
6AW–28199–8F–K0	16 – 27
6AW–28199–8F–L0	16 – 27
6AW–28199–8F–M0	16 – 27
6AW–28199–8F–N0	16 – 27
6AW–28199–8F–P0	16 – 27
6AW–28199–8F–R0	16 – 27
6AW–41131–01–CA	33 – 29
6AW–41132–00–9S	33 – 31
6AW–41134–02	33 – 32
	41 – 9
6AW–41135–00	33 – 35
	41 – 11
6AW–41136–00	33 – 37
	41 – 12
6AW–41137–11–CA	33 – 1
6AW–41138–00	33 – 34
	41 – 10
6AW–42169–00	26 – 9
6AW–42477–00	2 – 13
6AW–42510–01–8D	30 – 5
6AW–42532–00	2 – 5
6AW–42610–30	2 – 1
6AW–42615–00	25 – 7
6AW–4261A–00	2 – 2

PART NO. N° PIECES	REF. NO.
6AW–42628–20	2 – 15
6AW–42629–00	26 – 28
6AW–42646–10	2 – 9
6AW–42647–00–9S	2 – 6
6AW–4264A–00	2 – 8
6AW–42663–00	2 – 7
6AW–42675–10	2 – 20
6AW–42676–10	2 – 21
6AW–42677–10	2 – 22
6AW–42678–10	2 – 18
6AW–4267A–00	2 – 19
6AW–42681–10	2 – 23
6AW–42682–10	2 – 24
6AW–42697–10	2 – 16
6AW–42710–02–8D	25 – 1
63P–42716–00	25 – 8
61A–42717–00	25 – 33
69J–42717–00	26 – 20
6AW–42721–00	26 – 25
6AW–42722–00	25 – 14
6AW–42723–00–9S	26 – 24
69J–42723–01	23 – 38
6AW–42724–00	33 – 13
6AW–42725–01	25 – 2
6AW–42726–00	25 – 38
6H1–42726–21	25 – 35
6AW–42733–00	26 – 18
6AW–42734–00	26 – 19
6AH–42735–00	2 – 17
6AW–42735–00	25 – 5
6AW–42741–00–8D	27 – 1
6AW–42743–00	23 – 27
6AW–42744–00	26 – 16
6H4–42748–00	25 – 37
68F–42753–00	25 – 40
6AW–42761–00	25 – 3
6AW–42767–00	26 – 39
6AW–42769–00	26 – 27
6AW–42771–00–8D	27 – 3
69J–42774–10	27 – 5
6AW–42775–00	27 – 12
6AW–42785–00	26 – 7
6AW–42786–00	26 – 22
6AW–42787–00	26 – 23
6EE–42794–40	25 – 42
6EE–42794–50	25 – 43
6AW–42815–00–8D	25 – 9
6AW–42816–01–8D	25 – 10

PART NO. N° PIECES	REF. NO.
6AW–42817–01–8D	25 – 11
6AW–42818–01	25 – 20
6AW–42819–01	25 – 21
6AW–4281A–01	25 – 22
6AW–42828–00–9S	25 – 12
6AW–42829–00–9S	25 – 13
6AW–42851–00	25 – 28
6AW–43111–00–8D	29 – 1
6AW–43112–00–8D	29 – 13
6AW–43113–00	29 – 16
6AW–43126–01	29 – 44
6R3–43131–10	29 – 21
61A–43132–00	29 – 11
61A–43133–00	29 – 17
6AW–43138–00	32 – 8
66T–43144–00	25 – 26
6AW–43148–00	29 – 42
6AW–43181–01	29 – 39
6AW–43185–01	29 – 40
6AW–43311–00–8D	29 – 33
6AW–43376–00	30 – 3
6AW–43800–05	31 – 1
6AW–43802–00	31 – 35
6AW–43804–01	32 – 5
6AW–43805–00	32 – 3
6AW–43809–00	31 – 53
6AW–4380J–00	32 – 10
6AW–4380R–01	31 – 5
6AW–43810–01	31 – 14
6AW–43813–00	31 – 13
6AW–43814–00	31 – 17
64E–43816–00	31 – 54
6AW–43817–00	31 – 52
64E–43817–11	31 – 29
6AW–4381A–01	31 – 19
6AW–4381G–00	31 – 50
6AW–43820–01	31 – 10
6AW–43821–01	31 – 6
6AW–43822–00	31 – 9
6AW–43825–03	31 – 2
6AW–43828–00	31 – 24
6AW–43829–00	31 – 26
6AW–4382G–00	31 – 43
6AW–43830–00	31 – 32
64E–43831–00	31 – 22
6AW–43842–00	32 – 9
6AW–43843–00	32 – 4
6AW–43844–00	31 – 41

PART NO. N° PIECES	REF. NO.
6AW–4384H–00	31 – 40
6AW–4384J–00	31 – 7
6AW–43856–00	31 – 37
64E–43858–00	31 – 18
	31 – 45
6AW–43858–00	31 – 34
6AW–43860–01	31 – 44
6AW–43861–00	31 – 51
6E5–43862–00	31 – 8
	31 – 12
	31 – 15
6G5–43863–00	31 – 42
6G5–43864–00	31 – 11
64E–43865–00	31 – 56
64E–43866–00	31 – 16
64E–43868–00	31 – 21
6AW–43869–00	31 – 39
6AW–4386K–00	32 – 11
6AW–43871–00	31 – 4
64E–43873–00	31 – 48
6AW–43875–00	31 – 49
6AW–43878–00	31 – 30
6AW–43879–00	31 – 23
64E–4387A–00	31 – 47
6AW–4387G–00	31 – 20
6AW–43880–02	32 – 1
6AW–43881–12	32 – 6
6AW–43882–00	32 – 2
6AW–43886–00	31 – 33
6AW–43887–00	31 – 25
6AX–43887–00	32 – 7
6AW–43888–00	31 – 31
6AW–4388E–00	31 – 28
6AW–4388H–00	31 – 57
6AW–4388J–00	31 – 38
6AX–4388J–00	31 – 55
6E5–43896–00	31 – 36
6AW–43897–00	31 – 27
6AW–43899–00	31 – 59
6AW–4389H–00	31 – 3
6AW–4389J–00	31 – 58
6AW–44116–00	29 – 37
6AW–44117–00	16 – 23
6AW–44118–01	28 – 10
6AW–44120–01	28 – 9
6AW–44121–00	28 – 5
6AW–44122–00	28 – 4
6AW–44150–00	35 – 14

PART NO. N° PIECES	REF. NO.
6AX–44150–00	37 – 14
6AW–44150–10	35 – 14
6AX–44150–10	37 – 14
6AW–44176–00	28 – 1
6AW–44194–00	30 – 29
6AW–44311–01	35 – 17
	37 – 17
6AW–44312–00	35 – 24
	36 – 6
	37 – 24
	38 – 6
6AW–44315–00	35 – 28
	37 – 28
	41 – 24
	41 – 36
6AW–44322–00	35 – 20
	37 – 20
	41 – 30
6AW–44323–00	35 – 27
	37 – 27
	41 – 35
6AW–44336–00	35 – 26
	37 – 26
	41 – 34
6AW–44352–00	35 – 25
	37 – 25
	41 – 33
6AW–44361–00	36 – 3
	38 – 3
6AW–44362–00	36 – 30
	38 – 30
6CE–44362–00	36 – 4
	38 – 4
6AW–44363–00	36 – 7
	38 – 7
6AW–44365–00	35 – 23
	36 – 1
	36 – 5
	37 – 23
	38 – 1
	38 – 5
	41 – 23
6AW–44366–00	33 – 54
	36 – 2
	38 – 2
	41 – 16
6AW–44367–00	36 – 29
	38 – 29

PART NO. N° PIECES	REF. NO.
6AW–44375–00	36 – 31
	38 – 31
6AW–44376–00	36 – 32
	38 – 32
6P2–44391–00	25 – 34
6AW–44511–01–CA	30 – 31
6AW–44514–01	30 – 23
6AW–44526–00	30 – 25
6G5–44526–00	29 – 5
6AW–44532–00	30 – 24
6AW–44533–00	30 – 30
6AW–44551–00–CA	30 – 10
6AW–44552–00–CA	30 – 21
6AW–44555–00	30 – 13
6AW–44575–00	30 – 12
6AW–45111–10–8D	33 – 43
6AW–45113–00	33 – 44
	41 – 15
69J–45123–00	33 – 42
	41 – 14
6AW–45127–00	33 – 41
	41 – 13
6AW–45151–01–8D	27 – 11
69J–45152–10	33 – 48
6AW–45159–00	33 – 56
6AW–45181–01–9S	33 – 36
6AW–45211–10–8D	33 – 53
6AW–45214–00	36 – 16
	38 – 16
6AW–45215–00	36 – 17
	38 – 17
6AW–45224–00	36 – 20
	38 – 20
6AW–45225–00	36 – 22
	38 – 22
6AW–45244–00	35 – 45
	37 – 45
6AW–45251–00	1 – 15
	29 – 4
6AW–45300–21–8D	35 – 1
6AX–45300–22–8D	37 – 1
6AW–45300–32–8D	35 – 1
6AX–45300–33–8D	37 – 1
6AW–45311–01–8D	35 – 2
	37 – 2
6AW–45318–00	33 – 50
6AW–45321–00	35 – 10
	37 – 10

PART NO. N° PIECES	REF. NO.
6AW–45332–00	35 – 63
6AX–45332–00	37 – 64
6AW–45335–00–CA	35 – 32
	37 – 32
688–45341–10	35 – 8
	37 – 8
6AW–45344–00	35 – 41
	37 – 41
6AW–45373–00	1 – 22
	36 – 24
	38 – 24
6AW–45375–00	36 – 15
	38 – 15
61A–45376–00	36 – 14
	38 – 14
6AW–45383–00	35 – 73
	37 – 73
6AW–45384–00	35 – 74
	37 – 74
6AW–45501–00	35 – 43
	37 – 43
6AW–45501–10	35 – 43
	37 – 43
6T5–45539–00	35 – 44
	37 – 44
6AW–45550–00	35 – 46
6AX–45550–00	37 – 46
6AX–45560–02	37 – 49
6AW–45567–00	35 – 6
	37 – 6
6AW–45567–10	35 – 6
	37 – 6
6AW–45567–20	35 – 6
	37 – 6
6AW–45567–30	35 – 6
	37 – 6
6AW–45567–40	35 – 6
	37 – 6
6AW–45567–50	35 – 6
	37 – 6
6AW–45571–00	35 – 66
6AW–45576–00	35 – 65
	37 – 66
6AW–45577–00	35 – 67
	37 – 67
6AW–45577–10	35 – 67
	37 – 67
6AW–45577–20	35 – 67

PART NO. N° PIECES	REF. NO.
6AW–45577–20	37 – 67
6AW–45577–30	35 – 67
	37 – 67
6AW–45577–40	35 – 67
	37 – 67
6AW–45577–50	35 – 67
	37 – 67
6AW–45577–60	35 – 67
	37 – 67
6K1–45578–01	37 – 63
6K1–45578–10	37 – 63
6K1–45578–20	37 – 63
6K1–45578–30	37 – 63
6K1–45578–40	37 – 63
6K1–45578–50	37 – 63
6K1–45578–60	37 – 63
6AW–45587–00	35 – 35
	37 – 35
6AW–45587–10	35 – 35
	37 – 35
6AW–45587–20	35 – 35
	37 – 35
6AW–45587–30	35 – 35
	37 – 35
6AW–45587–40	35 – 35
	37 – 35
6AW–45587–50	35 – 35
	37 – 35
6AW–45587–60	35 – 35
	37 – 35
6AW–45611–00	35 – 50
6AX–45611–01	37 – 50
6AW–45612–00	35 – 62
6AW–45619–00	36 – 27
	38 – 27
6AW–45631–00	35 – 54
	37 – 54
6AW–45632–00	35 – 53
	37 – 53
6AW–45633–00	35 – 55
	37 – 55
61A–45634–01	35 – 52
	37 – 52
61A–45635–00	35 – 57
	37 – 57
6AW–45641–00	35 – 51
6AX–45641–00	37 – 51
6H1–45668–00	35 – 56

PART NO. N° PIECES	REF. NO.
6H1–45668–00	37 – 56
6AW–45723–00	35 – 31
	37 – 31
6AW–45970–20	36 – 38
6AX–45970–20	38 – 38
6AW–45972–20	36 – 38
6AX–45972–20	38 – 38
6AW–45974–20	36 – 38
6AX–45974–20	38 – 38
6AW–45976–20	36 – 38
6AX–45976–20	38 – 38
6AW–45978–20	36 – 38
6AX–45978–20	38 – 38
6AW–45987–00	36 – 33
	38 – 33
6AW–45997–00	36 – 34
	38 – 34
6AW–45C81–10	36 – 39
	38 – 39
6AW–4820A–11	28 – 16
6Y8–48277–00	39 – 16
6AW–81218–00	22 – 21
6Y8–81315–01	39 – 17
6AW–81328–00	22 – 18
6AW–8132G–00	18 – 15
6AW–81337–02	18 – 9
63D–81345–00	18 – 5
6AW–81443–00	20 – 41
6AW–81460–00	18 – 3
6AW–81539–00	21 – 2
6P2–81639–10	20 – 26
6AW–81677–00	23 – 23
6AW–81678–00	20 – 39
6AW–81800–00	24 – 1
6AW–81807–00	24 – 3
6AW–81808–00	24 – 8
6AW–81810–00	24 – 16
6AW–81820–00	24 – 18
6AW–81826–00	24 – 19
6AW–81830–00	24 – 2
6AW–81832–00	24 – 7
6AW–81836–00	24 – 4
6AW–81839–00	24 – 14
6AW–8183R–00	24 – 11
6AW–8183T–00	24 – 6
6AW–81840–00	24 – 17
6AW–81842–00	24 – 15
6AW–81845–10	23 – 29

PART NO. N° PIECES	REF. NO.
6AW–81846–00	24 – 20
6AW–81850–00	24 – 13
6AW–81854–00	24 – 12
6AW–81857–00	24 – 9
6AW–81862–00	24 – 10
6AW–81891–00	24 – 5
6AW–81919–20	20 – 45
6AW–81919–31	20 – 46
6AW–81925–01	22 – 23
6AW–81941–00	24 – 21
6AW–81942–00	20 – 16
6AW–81948–00	20 – 37
69J–81949–02	23 – 47
6AW–8194A–00	20 – 5
6AW–81950–00	20 – 1
6AW–81952–00	20 – 10
68V–81953–00	20 – 6
6AW–8195A–00	20 – 20
6AW–81960–02	22 – 1
6AW–81972–00–9S	22 – 4
6AW–81975–00	22 – 3
6EE–81994–40	18 – 18
6EE–81994–50	18 – 19
6AH–81996–00	25 – 44
6AW–82105–01	22 – 32
6P2–82113–00	20 – 28
6AW–82117–01	22 – 28
6AW–82119–00	22 – 33
6G5–82119–00	20 – 9
6G5–82119–10	20 – 4
6AW–82119–20	22 – 34
6E5–82147–00	29 – 35
6AW–82148–00	31 – 62
6H1–82148–00	29 – 7
	29 – 9
	31 – 60
6AW–82149–00	30 – 16
67F–82151–00	20 – 23
6P2–82151–00	20 – 19
6TA–82151–00	39 – 18
67F–82151–10	20 – 24
67F–82151–40	20 – 21
67F–82151–50	20 – 22
6AW–82170–03	20 – 18
6AW–82171–00	20 – 31
6CB–82310–00	21 – 1
6A0–82317–00	20 – 13
	20 – 32

PART NO. N° PIECES	REF. NO.
663–82317–01	18 – 10
6AW–82353–10	21 – 14
6AW–8235A–00	22 – 10
6AW–82364–00	12 – 15
6AW–82365–00	12 – 16
6AW–82366–00	12 – 18
6P2–82380–00	12 – 10
6AW–82388–00	23 – 21
6Y8–82509–10	39 – 8
6Y8–82521–11	39 – 15
6AW–82544–01	19 – 13
6AW–82560–00	23 – 34
6AW–82563–01	23 – 37
6AW–82572–00	20 – 35
6AW–82573–00	20 – 36
6AW–8257G–00	23 – 25
6AW–82581–00	22 – 9
69J–82587–00	23 – 39
6AW–82588–00	19 – 15
6E5–82588–00	26 – 13
6E9–82588–00	23 – 35
6AW–82589–01	23 – 8
6AW–82590–32	23 – 1
6AW–8259M–00	22 – 27
68F–82846–00	20 – 27
6X4–83383–00	39 – 5
6X4–83386–00	39 – 6
6AW–8339X–00	26 – 37
6AX–83614–00	23 – 40
63P–83614–01	23 – 42
6AW–83614–01	22 – 15
6AW–83651–00	19 – 18
6AW–8366B–01	21 – 11
60V–8366D–00	21 – 12
6AW–8366G–10	21 – 7
6AW–83672–00	30 – 1
6Y8–8454G–00	39 – 11
6P2–85075–00	21 – 5
72X–85075–L0	31 – 46
68F–85119–00	19 – 7
6P2–85544–00	20 – 25
689–85547–00	16 – 1
60V–85564–00	19 – 5
6AW–85580–00	18 – 4
6P2–85780–00	6 – 10
61A–85790–00	23 – 32
63P–85886–00	19 – 19
6P2–85896–00	21 – 4

PART NO. N° PIECES	REF. NO.
6AW–8591A–51	19 – 1
6AW–8591C–00	19 – 8
6AW–85991–00	19 – 3
6AW–8611A–00	10 – 8
6C5–86120–00	10 – 6
6CB–86120–00	6 – 5
6Y8–86260–03	39 – 2
6AA–86261–01	39 – 3
6Y8–86267–00	39 – 1
6AW–8A7A1–00	23 – 2
6AW–8A7A2–00	23 – 3
6AW–8A7A3–00	23 – 4
6AW–8A7A4–00	23 – 5
6AW–8A7A5–00	23 – 6
K0F–A3741–00	8 – 5
K0F–A3742–00	8 – 6
K0F–A3743–00	8 – 3
K0F–A3751–00	8 – 8
K0F–A3751–10	8 – 8
K0F–A3751–20	8 – 8
K0F–A3751–30	8 – 8
K0F–A3751–40	8 – 8
K0F–A3751–50	8 – 8
K0F–A3751–60	8 – 8
K0F–A3751–70	8 – 8
K0F–A3751–80	8 – 8
K0F–A3751–90	8 – 8
K0F–A3751–A0	8 – 8
K0F–A3751–B0	8 – 8
K0F–A3751–C0	8 – 8
K0F–A3751–D0	8 – 8
K0F–A3751–E0	8 – 8
K0F–A3751–F0	8 – 8
K0F–A3751–G0	8 – 8
K0F–A3751–H0	8 – 8
K0F–A3751–J0	8 – 8
K0F–A3751–K0	8 – 8
K0F–A3751–L0	8 – 8
K0F–A3751–M0	8 – 8
K0F–A3751–N0	8 – 8
K0F–A3751–P0	8 – 8
K0F–A3751–R0	8 – 8
K0F–A3751–S0	8 – 8
K0F–A3751–T0	8 – 8
K0F–A3753–00	8 – 8
K0F–A3753–10	8 – 8
K0F–A3753–20	8 – 8
K0F–A3753–30	8 – 8

NUMERICAL INDEX
INDEX NUMERIQUE

PART NO. N° PIECES	REF. NO.
K0F–A3753–40	8 – 8
K0F–A3753–50	8 – 8
K0F–A3753–60	8 – 8
K0F–A3753–70	8 – 8
6AW–W0001–01	40 – 1
6AW–W0001–21	41 – 1
6AW–W0078–00	1 – 23
	41 – 29
6AW–W009A–02–9S	5 – 1
6AW–W009C–02–9S	5 – 9
6AW–W1165–00	4 – 8
6AW–W4624–00	8 – 24
6AW–W8145–01	18 – 1
6EK–W9010–00	18 – 2
90101–08022	22 – 25
90101–12031	29 – 48
90101–14004	30 – 17
90105–05012	3 – 29
90105–06028	3 – 30
90105–06035	6 – 7
90105–06037	3 – 17
90105–06039	3 – 36
90105–06155	3 – 13
	25 – 24
90105–06M07	5 – 20
90105–06M08	13 – 6
	13 – 12
90105–08175	3 – 6
	3 – 10
90105–08178	8 – 31
90105–08220	5 – 26
90105–08240	6 – 9
90105–10257	36 – 26
	38 – 26
90105–16003	30 – 26
90109–06M81	25 – 15
	26 – 14
	26 – 26
90109–06M86	7 – 11
	23 – 26
	23 – 28
	23 – 43
	25 – 4
	25 – 6
	25 – 27
	26 – 17
	26 – 40
90109–06MA1	23 – 20

PART NO. N° PIECES	REF. NO.
90110–05050	36 – 23
	38 – 23
90110–08085	28 – 2
90110–10018	36 – 28
	38 – 28
90111–06094	25 – 29
90111–06142	27 – 9
90111–06144	10 – 9
	27 – 7
	27 – 8
90116–06046	9 – 30
90116–10041	36 – 9
	38 – 9
90116–10047	29 – 30
90119–06269	9 – 26
90119–06M17	9 – 21
	16 – 12
90119–06M59	20 – 15
	20 – 34
90119–06M82	19 – 2
90119–06M88	10 – 2
90119–06MA3	22 – 7
90119–06MA5	22 – 8
90119–06MA6	9 – 10
	9 – 16
90119–07001	5 – 5
	5 – 13
90119–07234	5 – 6
	5 – 14
90119–08022	9 – 9
	9 – 15
90119–08102	33 – 8
90119–08115	5 – 27
90119–08117	33 – 33
90119–08M14	35 – 30
	37 – 30
	41 – 38
90119–08M22	25 – 32
90119–08M26	35 – 13
	37 – 13
90119–10007	33 – 45
90119–10008	36 – 12
	38 – 12
90119–10009	36 – 13
	38 – 13
90119–10024	30 – 22
	30 – 32
90119–10038	36 – 9

PART NO. N° PIECES	REF. NO.
90119–10038	38 – 9
90119–10039	29 – 29
90119–10040	33 – 10
90119–10050	8 – 15
90119–10M07	8 – 28
90149–11001	5 – 25
90151–06M02	3 – 19
	33 – 28
90152–05003	36 – 18
	38 – 18
90167–06M00	39 – 12
90170–10009	36 – 11
	38 – 11
90170–30M18	35 – 39
	37 – 39
90171–18M04	36 – 36
	38 – 36
90173–06001	27 – 10
90179–06M28	9 – 31
90179–08003	24 – 23
90179–18009	35 – 48
	37 – 48
90183–02M03	35 – 59
	37 – 59
90185–05002	36 – 19
	36 – 21
	38 – 19
	38 – 21
90185–14M00	30 – 19
90185–16008	30 – 27
90185–22007	29 – 24
90201–02M00	35 – 58
	37 – 58
90201–06M30	25 – 23
	39 – 13
90201–10048	29 – 32
	36 – 10
	38 – 10
90201–10049	29 – 3
	29 – 15
90201–10M01	8 – 29
90201–11008	28 – 6
90201–12060	29 – 49
90201–12426	29 – 50
90201–13M19	29 – 51
90201–156J2	25 – 19
90201–15M58	30 – 18
90201–16016	30 – 15

PART NO. N° PIECES	REF. NO.
90201–16030	30 – 28
90201–18023	35 – 47
	37 – 47
90201–186F1	5 – 8
	5 – 16
90201–19M01	36 – 35
	38 – 35
90201–26014	29 – 23
90201–301U7	35 – 37
	37 – 37
90201–35015	35 – 49
90201–46008	30 – 6
90201–68008	35 – 34
	37 – 34
90202–15M37	25 – 17
90202–19001	28 – 13
90202–32M19	30 – 14
90202–45001	30 – 8
90206–15M18	25 – 18
90214–30003	35 – 38
	37 – 38
90282–05008	35 – 72
	37 – 72
90338–30256	26 – 41
90340–08002	35 – 7
	37 – 7
90340–14M06	34 – 5
90340–18M09	5 – 7
	5 – 15
90380–19001	28 – 12
90381–15002	25 – 16
90386–07001	27 – 6
90386–10M16	29 – 41
90386–18M14	29 – 46
90386–18M63	29 – 45
90386–25003	29 – 22
90386–45002	30 – 9
90387–06037	33 – 18
90387–06119	20 – 14
	20 – 33
90387–06176	19 – 6
90387–06263	34 – 8
90387–06276	9 – 29
90387–06285	18 – 13
90387–06289	9 – 23
	16 – 13
90387–08M31	28 – 20
90387–08M37	25 – 31

PART NO. N° PIECES	REF. NO.
90387–11005	5 – 24
90401–19001	3 – 42
90430–05002	3 – 28
	40 – 10
90430–06M03	5 – 21
90430–08003	1 – 21
	35 – 9
	37 – 9
	41 – 17
90430–14M09	1 – 20
	34 – 6
	41 – 3
90445–09026	11 – 29
90445–09104	11 – 11
90445–09120	11 – 26
90445–116J1	26 – 11
90445–14013	26 – 8
90445–14015	26 – 6
90446–18002	15 – 10
90446–32002	10 – 19
90462–10042	18 – 8
90462–12008	3 – 39
90464–07009	21 – 10
90464–08051	23 – 46
90464–09008	20 – 44
90464–09023	9 – 5
90464–09M42	11 – 16
90464–09M47	23 – 7
90464–10010	11 – 25
90464–10M59	28 – 25
90464–11009	16 – 22
90464–11121	16 – 17
	20 – 12
	20 – 40
	22 – 13
	23 – 31
90464–12001	26 – 38
90464–12002	22 – 2
90464–12012	15 – 19
90464–12183	20 – 11
90464–12224	11 – 1
	15 – 11
90464–13249	22 – 12
90464–16001	28 – 24
90464–16240	19 – 11
90464–17006	9 – 11
90464–18246	10 – 10
	19 – 10

PART NO. N° PIECES	REF. NO.
90464–18246	21 – 9
	23 – 15
90464–20181	16 – 18
	23 – 14
	23 – 45
90464–20258	25 – 41
90464–25005	23 – 12
90464–30005	11 – 33
90464–32002	11 – 15
90464–44002	22 – 17
90464–60067	11 – 19
90464–99004	10 – 4
90465–08M82	26 – 15
90465–08M83	29 – 19
	29 – 27
90465–11M10	11 – 12
	16 – 5
	20 – 43
	25 – 36
	26 – 12
	28 – 17
	28 – 22
	29 – 26
	39 – 10
90465–11M59	7 – 3
	7 – 6
	33 – 7
90465–13M18	23 – 13
90465–13M24	19 – 12
90465–14M66	19 – 4
	19 – 17
	22 – 11
	22 – 19
	23 – 44
90467–08M10	11 – 27
90467–11136	11 – 18
90468–18008	28 – 8
90468–180A0	28 – 7
90480–10M23	9 – 22
	16 – 14
90480–12314	6 – 2
	6 – 4
	18 – 11
	23 – 18
	23 – 19
90480–14M17	27 – 2
	27 – 4
90480–15M31	18 – 12

NUMERICAL INDEX
INDEX NUMERIQUE

PART NO. N° PIECES	REF. NO.
90480–16007	25 – 39
90480–19368	23 – 16
90480–22M81	25 – 30
90501–10M77	35 – 60
	37 – 60
90501–127J4	35 – 16
	37 – 16
90506–22001	25 – 25
91314–10020	29 – 2
	29 – 14
91490–40030	36 – 37
	38 – 37
91690–30020	29 – 43
91809–08006	5 – 4
	5 – 12
91814–18002	3 – 4
92900–08600	28 – 19
92990–06100	2 – 11
92990–08600	22 – 26
	28 – 3
92990–10300	36 – 25
	38 – 25
92990–10600	23 – 33
92995–06200	2 – 4
92995–14600	30 – 20
93101–12M70	35 – 12
	37 – 12
	41 – 19
93101–28018	35 – 33
	37 – 33
	41 – 25
93101–35018	35 – 70
	37 – 70
	41 – 27
93102–38008	8 – 23
	40 – 17
93102–85004	4 – 3
	40 – 16
93109–24001	35 – 18
	37 – 18
	41 – 20
93210–04279	39 – 9
93210–09165	28 – 15
93210–19758	33 – 21
	41 – 8
93210–19MJ3	34 – 20
	41 – 5
93210–207A0	7 – 14

PART NO. N° PIECES	REF. NO.
93210–207A0	40 – 11
93210–24M79	3 – 47
	40 – 21
93210–26658	3 – 32
	34 – 17
	40 – 13
	40 – 19
93210–28543	33 – 16
	41 – 7
93210–347A1	33 – 15
	41 – 6
93210–37160	35 – 22
	37 – 22
	41 – 22
	41 – 32
93210–43001	30 – 7
93210–48214	35 – 11
	37 – 11
	41 – 18
93210–69MG6	35 – 40
	37 – 40
	41 – 26
93210–94003	35 – 21
	37 – 21
	41 – 21
	41 – 31
93211–10232	35 – 71
	37 – 71
	41 – 28
93306–21101	35 – 64
93311–63591	35 – 68
	37 – 68
93311–93590	35 – 3
	37 – 3
93332–000A2	37 – 65
93340–67011	35 – 4
	37 – 4
93341–440U5	37 – 62
93390–00031	35 – 5
	37 – 5
93399–99962	35 – 36
	37 – 36
93410–18M05	29 – 47
93410–19088	28 – 14
93410–21089	29 – 25
93410–44087	30 – 11
93420–35085	35 – 19
	37 – 19

PART NO. N° PIECES	REF. NO.
93420–38091	33 – 51
93501–04011	35 – 61
	37 – 61
93604–08062	3 – 14
93606–12019	3 – 3
	3 – 9
	4 – 2
	35 – 29
	37 – 29
	41 – 37
93606–19M23	33 – 40
93608–12M05	33 – 55
	36 – 8
	38 – 8
93608–16M16	33 – 12
	33 – 30
	33 – 46
	34 – 4
93700–06002	29 – 34
94702–00400	1 – 7
	5 – 37
95380–06600	2 – 12
	10 – 7
95380–12600	29 – 52
95780–06300	39 – 14
95780–08300	2 – 10
95780–10300	29 – 31
	30 – 4
95812–06025	34 – 10
95895–06016	34 – 21
95D75–06025	26 – 33
95D75–08035	9 – 1
95D95–06010	7 – 16
	33 – 52
95D95–06012	3 – 40
	16 – 21
95D95–06014	5 – 36
	7 – 15
95D95–06016	9 – 19
	9 – 28
	20 – 17
	21 – 8
	26 – 21
	26 – 30
	26 – 36
95D95–06020	18 – 14
	20 – 38
95D95–06025	16 – 24

PART NO. N° PIECES	REF. NO.
95D95–06025	21 – 3
95D95–06030	5 – 31
	5 – 34
95D95–06045	3 – 45
95D95–08025	5 – 22
97080–08030	28 – 18
97513–06520	20 – 3
97513–08545	24 – 22
97595–06510	31 – 61
97780–50514	20 – 42
97780–50620	20 – 30
97780–60516	2 – 3
97780–60520	26 – 2
97780–60620	10 – 13
	20 – 7
	39 – 7
97880–06035	39 – 12
97885–06010	29 – 12
	29 – 18
97885–06016	30 – 2
97980–06216	39 – 4
97985–05210	2 – 14
97985–06212	29 – 10
	29 – 20
97D95–06012	33 – 49
97E75–06514	10 – 15
	18 – 16
97E75–06550	34 – 16
97E75–08535	33 – 39
97E75–08570	34 – 3
97E75–10545	33 – 9
97E75–10570	36 – 13
	38 – 13
97E75–10585	33 – 11
97E95–06510	22 – 30
	29 – 8
	29 – 36
	29 – 38
97E95–06512	9 – 4
	16 – 16
	19 – 9
	19 – 14
	19 – 16
	23 – 17
97E95–06514	7 – 9
	22 – 16
	23 – 22
	23 – 24

PART NO. N° PIECES	REF. NO.
97E95–06514	23 – 30
	23 – 41
	27 – 13
	29 – 28
97E95–06516	9 – 25
	21 – 13
	22 – 14
	22 – 20
	22 – 22
	23 – 36
97E95–06520	21 – 6
	33 – 19
97E95–06525	23 – 10
	28 – 11
97E95–06530	29 – 6
97E95–06535	23 – 9
97E95–06610	20 – 2
	20 – 8
97E95–06616	22 – 29
	23 – 11
97E95–06630	18 – 7
97E95–08516	22 – 31
97E95–08520	22 – 24
	35 – 42
	37 – 42
98507–04008	14 – 35
98780–04015	22 – 6
98780–05550	33 – 23
	33 – 26
98780–06530	3 – 38
99002–10600	35 – 15
	37 – 15
99009–47500	35 – 69
	37 – 69
99530–08012	18 – 6
99530–10114	9 – 2
99530–14016	8 – 27

PART NO. N° PIECES	REF. NO.