YAMAHA

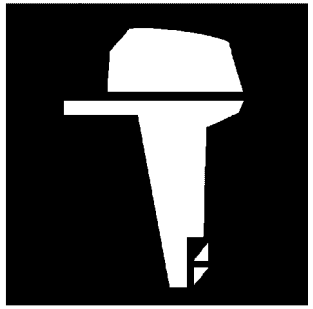

PARTS CATALOGUE
CATALOGUE DE PIECES DETACHEES

F70AET'19 (6CJA)

YAMAHA
GENUINE
Parts & Accessories

1T6CJ-300FA

( )

F70AET
PARTS CATALOGUE
©2019 by Yamaha Motor Co., Ltd.
1st edition, April 2019
All rights reserved.
Any reprinting or unauthorized use
without the written permission of
Yamaha Motor Co., Ltd.
is expressly prohibited.
Printed in Japan.

F70AET
CATALOGUE DE PIECES DETACHEES
©2019 par Yamaha Motor Co., Ltd.
1re édition, avril 2019
Tous droits réservés
Toute réimpression ou utilisation
non autorisée sans la permission écrite
de la Yamaha Motor Co., Ltd.
est formellement interdite.
Imprimé au Japon

FOREWORD

This Parts Catalogue is related to the parts for the model(s) on the cover page. When you are ordering replacement parts, please refer to this Parts Catalogue and quote both part numbers and part names correctly.

1. Modifications or additions which have been made after the issue of the Parts Catalogue will be announced in the Parts News.
   It is advisable that you make the necessary corrections to the Parts Catalogue according to the Parts News.

2. Abbreviations
   The following abbreviations are used in this Parts Catalogue.
   "UR" Use specified parts number.
   "UN" Use as many as needed.
   "AP" Alternate Parts
   "LM" Locally Made (Parts need to be ordered locally)
   "F#" Frame No. (Applicable machine No.)
   "O/S" Over Size

3. The number of components for assembly
   - Parts, which are to be supplied in an assembly, are listed with a dot (.) in front of the part name as shown below.
   - The numeral appearing to the right of each component part indicates the quantity of parts for each assembly unit.

PART NO.	DESCRIPTION	Q'TY	REMARKS
2F5–83310–60	FRONT FLASHER LIGHT ASSY	2	
115–83311–60	.BULB (6V–18W)	1	

4. Applicable colours of graphics are represented in the "REMARKS" as shown below.

PART NO.	DESCRIPTION	Q'TY	REMARKS
2N4–24110–00–X5	FUEL TANK COMP.	2	MXR
3J1–24240–10	.GRAPHIC, FUEL TANK	1	FOR MXR

5. Note that the illustrations for reference in finding parts numbers are not to be used for assembling. When assembling, please use the applicable service manual.

6. The asterisk (*) before a reference number indicates modified items after the first edition.

7. Applicable Serial No.
   Engine Serial No.

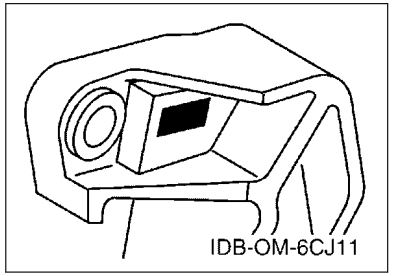

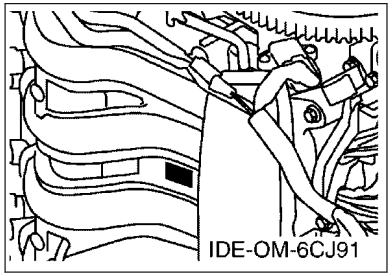

8. Applicable Engine Starting Serial No.

Model	Serial No.	Model	Serial No.
F70A	6CJ-1082803		

9. Applicable Colour Code

Abbreviation	Colour Name	Colour Code
DBN1	DARK BLUISH GRAY 1	008D

10. Quantity Column Information

Column No.	Name Of Q'ty Column	Applicable Model
1	6CJA	F70AET

AVANT–PROPOS

Ce catalogue de pièces détachées concerne les pièces pour le(s) modèle(s) indiqué(s) sur la page de couverture. Lorsque vous commandez des pièces de rechange, veuillez vous référer à ce catalogue de pieces détachées et indiquer clairement les numéros et les noms des pièces détachées.

1. Les modifications ou ajouts ayant été effectués après la parution du catalogue de pièces détachées seront décrits dans les Bulletins d'information concernant les pièces détachées.
   Il est recommandé que vous apportiez les corrections nécessaires au catalogue des pièces détachées en vous référant aux Bulletins d'information.

2. Abréviations
   Dans ce catalogue, les abréviations suivantes sont utilisées:
   "UR" Utiliser le numéro de pièces spécifié.
   "UN" Utiliser autant que nécessaire.
   "AP" Pièces de substitution
   "LM" Fabrication locale (les pièces doivent être commandées localement.)
   "F#" N° de cadre (applicable au N° de série)
   "O/S" Surdimensionné

3. Nombre de pièces d'un assemblage
   - Les pièces fournies comme composants d'un assemblage sont précédées d'un point (.) de la manière indiquée ci–dessous.
   - Le chiffre apparaissant à la droite de chaque composant indique la quantité de pièces pour chaque unité d'assemblage.

N° PIECES	DESCRIPTION	QTE	REMARQUES
2F5–83310–60	ENS. CLIGNOTANT AVANT	2	
115–83311–60	.AMPOULE (6V–18W)	1	

4. Les couleurs concernant les graphiques sont indiquées dans la colonne "REMARQUES", comme indiqué ci–dessous.

N° PIECES	DESCRIPTION	QTE	REMARQUES
2N4–24110–00–X5	RESERVOIR A ESSENCE.	2	MXR
3J1–24240–10	.GRAPHIQUE	1	POUR MXR

5. Veuillez noter que les illustrations sont indiquées à titre de référence pour trouver les numéros de pièces, non pour être utilisées lors de l'assemblage. Lors de l'assemblage, veuillez utiliser le manuel d'entretien adéquat.

6. L'astérisque (*) placé devant un numéro de référence indique des éléments qui ont été modifiés après la première édition.

7. N° de série applicable
   N° de Série du moteur

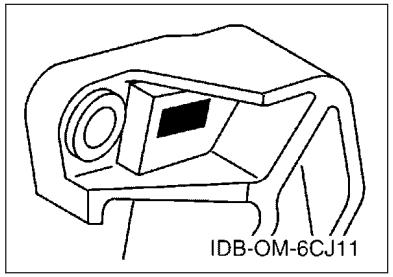

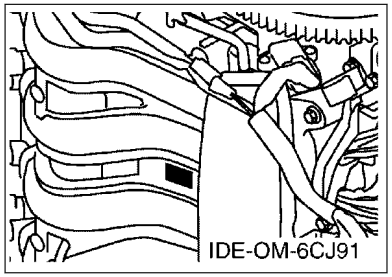

8. N° de série initial du moteur applicable

Modèle	N° de série	Modèle	N° de série
F70A	6CJ-1082803		

9. Code couleur applicable

Abréviation	Nom de la couleur	Code couleur
DBN1	DARK BLUISH GRAY 1	008D

10. Informations relatives à la colonne Quantité

N° de la colonne	Nom de la colonne Qté	Modèle applicable
1	6CJA	F70AET

CONTENTS

SCHEDULED SERVICE PARTS.....1
TOP COWLING.....2
CYLINDER & CRANKCASE 1.....3
CRANKSHAFT & PISTON.....5
CYLINDER & CRANKCASE 2.....6
VALVE.....7
INTAKE 1.....8
INTAKE 2.....9
INTAKE 3.....10
FUEL INJECTION PUMP 1.....11
FUEL INJECTION PUMP 2.....12
OIL PUMP.....13
FUEL.....14
GENERATOR.....16
ELECTRICAL 1.....18
ELECTRICAL 2.....19
ELECTRICAL 3.....20
ELECTRICAL 4.....21
STARTING MOTOR.....22
BOTTOM COWLING 1.....23
BOTTOM COWLING 2.....25
CONTROL.....26
BRACKET 1.....28
BRACKET 2.....30
POWER TRIM & TILT ASSY 1.....32
POWER TRIM & TILT ASSY 2.....35
UPPER CASING.....36
OIL PAN.....38
LOWER CASING & DRIVE 1.....39
LOWER CASING & DRIVE 2.....43
FUEL TANK.....44
STEERING GUIDE.....45
OPTIONAL PARTS 1.....46
OPTIONAL PARTS 2.....47
REPAIR KIT 1.....48
REPAIR KIT 2.....49

INDEX

NUMERICAL INDEX.....51

TABLE DES MATIERES

PIECES MAINTENANCE PERIODIQUE.....1
CAPOT SUPERIEUR..... 2
CYLINDRE & CARTER 1..... 3
VILEBREQUIN & PISTON.....5
CYLINDRE & CARTER 2..... 6
SOUPAPE..... 7
ADMISSION 1.....8
ADMISSION 2.....9
ADMISSION 3.....10
POMPE A INJECTEUR 1..... 11
POMPE A INJECTEUR 2..... 12
POMPE A HUILE.....13
CARBURANT..... 14
GENERATRICE.....16
PARTIE ELECTRIQUE 1.....18
PARTIE ELECTRIQUE 2.....19
PARTIE ELECTRIQUE 3.....20
PARTIE ELECTRIQUE 4.....21
DEMARREUR ELECTRIQUE.....22
CAPOT INFERIEUR 1.....23
CAPOT INFERIEUR 2.....25
COMMANDE..... 26
SUPPORT 1..... 28
SUPPORT 2..... 30
PUISSANCE PARER ET INCLINER 1..... 32
PUISSANCE PARER ET INCLINER 2..... 35
FOURREAU.....36
VENTILATEUR D'HUILE..... 38
BOITIER D'HELICE TRANSMISSION1.....39
BOITIER D'HELICE TRANSMISSION2.....43
RESERVOIR A CARBURANT.....44
FIXATION DE DIRECTION..... 45
PIECES OPTIONNELLES 1.....46
PIECES OPTIONNELLES 2.....47
KITS DE REPARATION 1..... 48
KITS DE REPARATION 2..... 49

INDEX

INDEX NUMERIQUE.....51

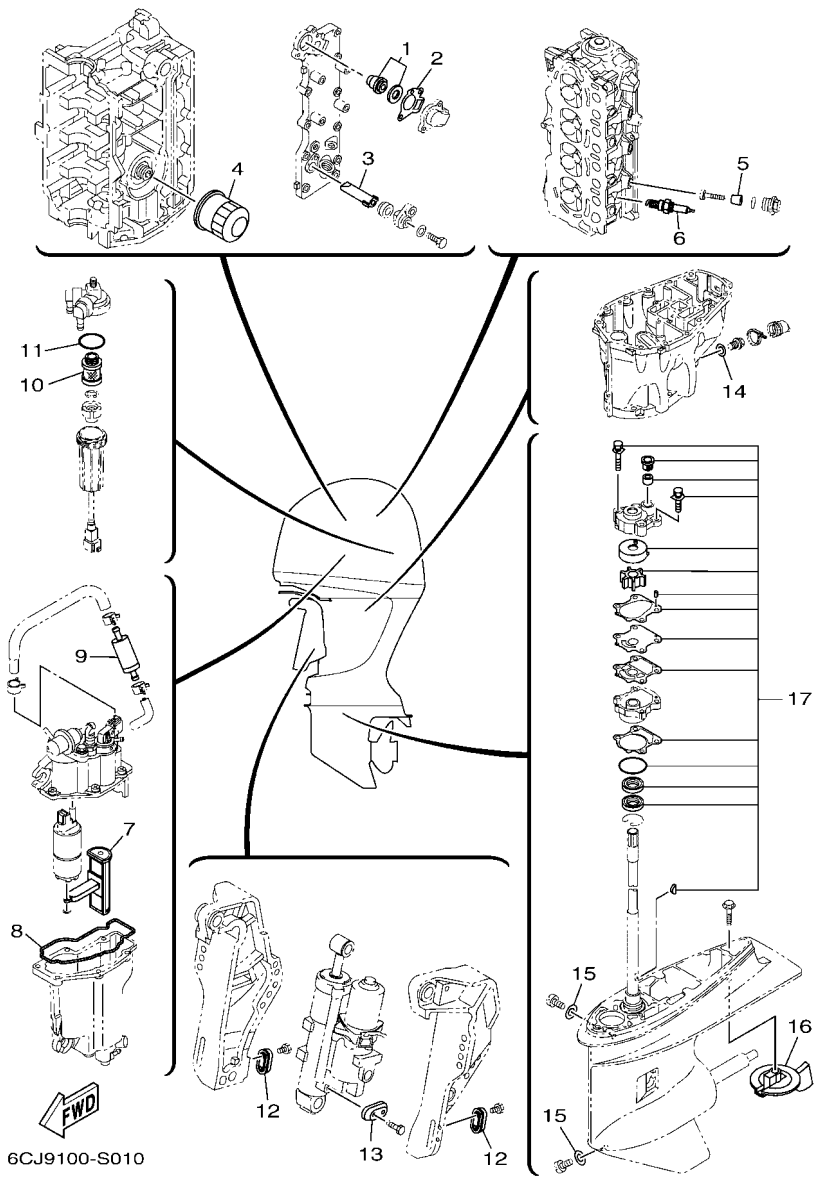

FIG. 1 SCHEDULED SERVICE PARTS — PIECES MAINTENANCE PERIODIQUE

REF. NO.	PART NO. N° PIECES	DESCRIPTION DESCRIPTION	6CJA					REMARKS REMARQUES
1	6G8–12411–03	THERMOSTAT THERMOSTAT	1					
2	62Y–12414–00	GASKET, COVER JOINT, COUVERCLE	1					
3	62Y–11325–00	ANODE ANODE	1					
4	5GH–13440–60	ELEMENT ASSY, OIL CLEANER ELEMENT, FILTRE A HUILE	1					
5	6G8–11325–00	ANODE ANODE	3					
6	94702–00429	PLUG, SPARK (NGK LKR7E) BOUGIE D,ALLUMAGE (NGK LKR7E)	4					
7	6C5–13915–00	FILTER FILTRE	1					
8	6C5–14984–10	GASKET, FLOAT CHAMBER JOINT, CUVE DE FLOTTEUR	1					
9	6C5–24251–00	STRAINER 1 FILTRE 1	1					
10	6D8–24563–00	ELEMENT, FILTER ELEMENT, FILTRE	1					
11	6D8–24564–00	GASKET JOINT	1					
12	65W–45251–00	ANODE ANODE	2					
13	65W–45251–00	ANODE ANODE	1					
14	90430–14M09	GASKET JOINT	1					
15	90430–08003	GASKET JOINT	2					
16	67F–45371–00	TAB-TRIM ANODE DERIVE	1					
17	6CJ–W0078–00	WATER PUMP REPAIR KIT KIT DE REPARATION DE LA POMPE	1					

FIG. 2 TOP COWLING — CAPOT SUPERIEUR

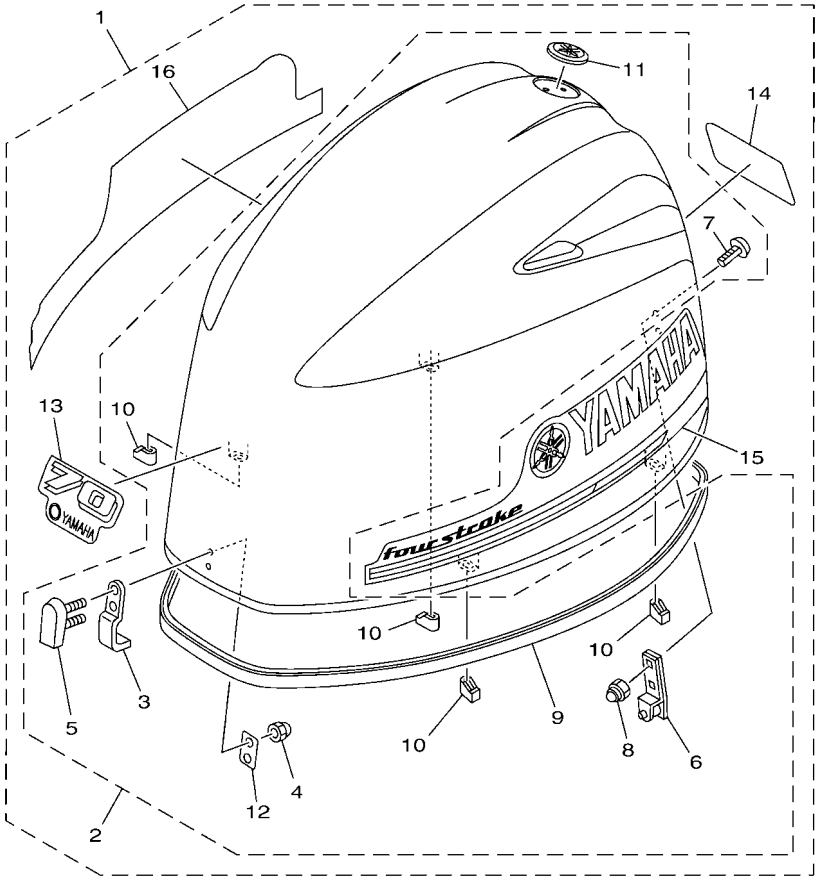

6CJ8100-R020

REF. NO.	PART NO. N° PIECES	DESCRIPTION DESCRIPTION	6CJA					REMARKS REMARQUES
1	6CJ–42610–02	TOP COWLING ASSY CAPOT (ENS.)	1					
2	6CJ–4261A–00	.TOP COWLING W/O GRAPHICS .CAPOT SUPERIEUR SANS GRAPHIQUE	1					
3	6BG–42651–00	..HOOK ..CROCHET	1					
4	95380–05800	..NUT ..ECROU	2					
5	6BG–42851–00	..COVER, CLAMP ..COUVERCLE, BRIDE	1					
6	6BG–42652–00	..HOOK ..CROCHET	1					
7	90109–06047	..BOLT ..BOULON	2					
8	90185–06M05	..NUT, SELF-LOCKING ..ECROU,AUTO-BLOQUANT	2					
9	6CJ–42615–00	..SEAL ..JOINT	1					
10	6BG–42662–00	..DAMPER ..AMORTISSEUR	4					
11	6AH–42697–10	..TUNING FORK MARK ..MARQUE, YAMAHA	1					
12	6BG–42649–00	..HOLDER, CLAMP BAND ..SUPPORT, SANDOW DE SERRAGE	1					
13	6CJ–42677–00	.GRAPHIC, FRONT .ADHESIF, AVANT	1					
14	6CJ–42678–01	.GRAPHIC, REAR .ADHESIF, ARRIERE	1					
15	6CJ–42675–00	.GRAPHIC, SIDE 1 .EMBLEME	1					
16	6CJ–42676–00	.GRAPHIC, SIDE 2 .EMBLEME	1					

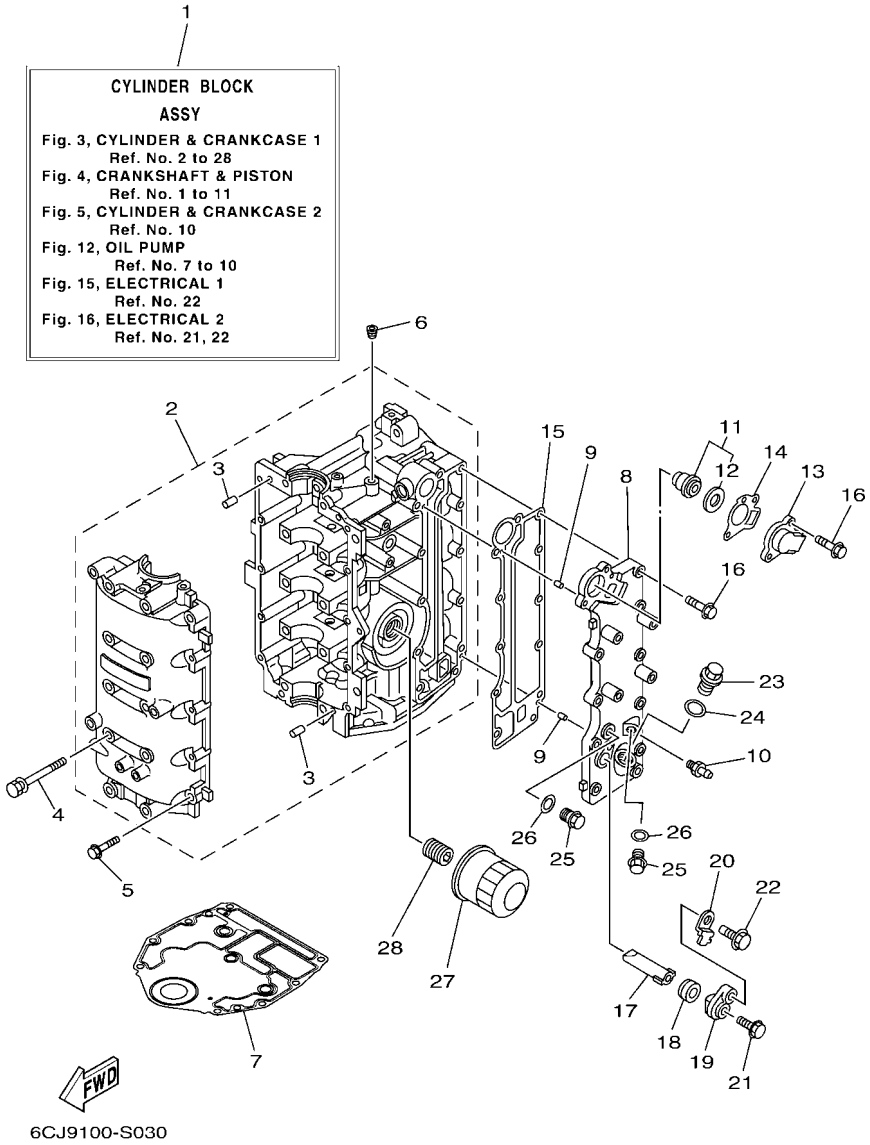

FIG. 3 CYLINDER & CRANKCASE 1 — CYLINDRE & CARTER 1

REF. NO.	PART NO. N° PIECES	DESCRIPTION DESCRIPTION	6CJA					REMARKS REMARQUES
1	6CJ–W009B–03–9S	CYLINDER BLOCK ASSY CYLINDRE GROUPE (ENS.)	1					
2	6CJ–15100–01	CRANKCASE ASSY CARTER DE MOTEUR COMPLET	1					
3	93606–12019	.PIN, DOWEL .GOUPILLE	4					
4	90119–08154	BOLT, WITH WASHER BOULON, AVEC RONDELLE	10					
5	97513–06535	BOLT, WITH WASHER VIS HEXAGONAL AVC RONDELLE	10					
6	90344–51003	PLUG, TAPER SCREW PLOT, FILETE CONIQUE	1					
7	6BG–11351–00	GASKET, CYLINDER JOINT, D'EMBASE	1					
8	6C5–41113–11–9S	OUTER COVER, EXHAUST COUVERCLE, ECHAPPEMENT	1					
9	93604–10M03	PIN, DOWEL CLAVETTE	2					
10	62Y–12481–10	PIPE 1 DURITE 1	1					
11	6G8–12411–03	THERMOSTAT THERMOSTAT	1					
12	688–12412–00	.SEAL, THERMOSTAT .JOINT, THERMOSTAT	1					
13	6C5–12413–00–9S	COVER, THERMOSTAT COUVERCLE, THERMOSTAT	1					
14	62Y–12414–00	GASKET, COVER JOINT, COUVERCLE	1					
15	6C5–41114–10	GASKET, EXHAUST OUTER COVER JOINT, COUVERCLE D'ECHAPPEMENT	1					
16	90119–06MA5	BOLT, WITH WASHER BOULON, AVEC RONDELLE	12					
17	62Y–11325–00	ANODE ANODE	1					
18	66M–11328–00	GROMMET, ANODE PASSE-FIL	1					
19	66M–11327–00–94	COVER, ANODE COUVERCLE ANODE	1					
20	66M–12535–00	PLATE PLAQUE	1					
21	97595–05512	BOLT, WITH WASHER VIS HEXAGONAL AVC RONDELLE	1					
22	97E95–06520	BOLT, HEXAGON W/W DEEP RECESS VIS HEXAGONAL AVC RONDELLE	1					
23	90340–18M09	PLUG, STRAIGHT SCREW PLOT, FILETE DROIT	1					
24	90201–186F1	WASHER, PLATE RONDELLE, PLATE	1					
25	90340–14M06	PLUG, STRAIGHT SCREW PLOT, FILETE DROIT	2					
26	90430–14115	GASKET JOINT	2					
27	5GH–13440–60	ELEMENT ASSY, OIL CLEANER ELEMENT, FILTRE A HUILE	1					

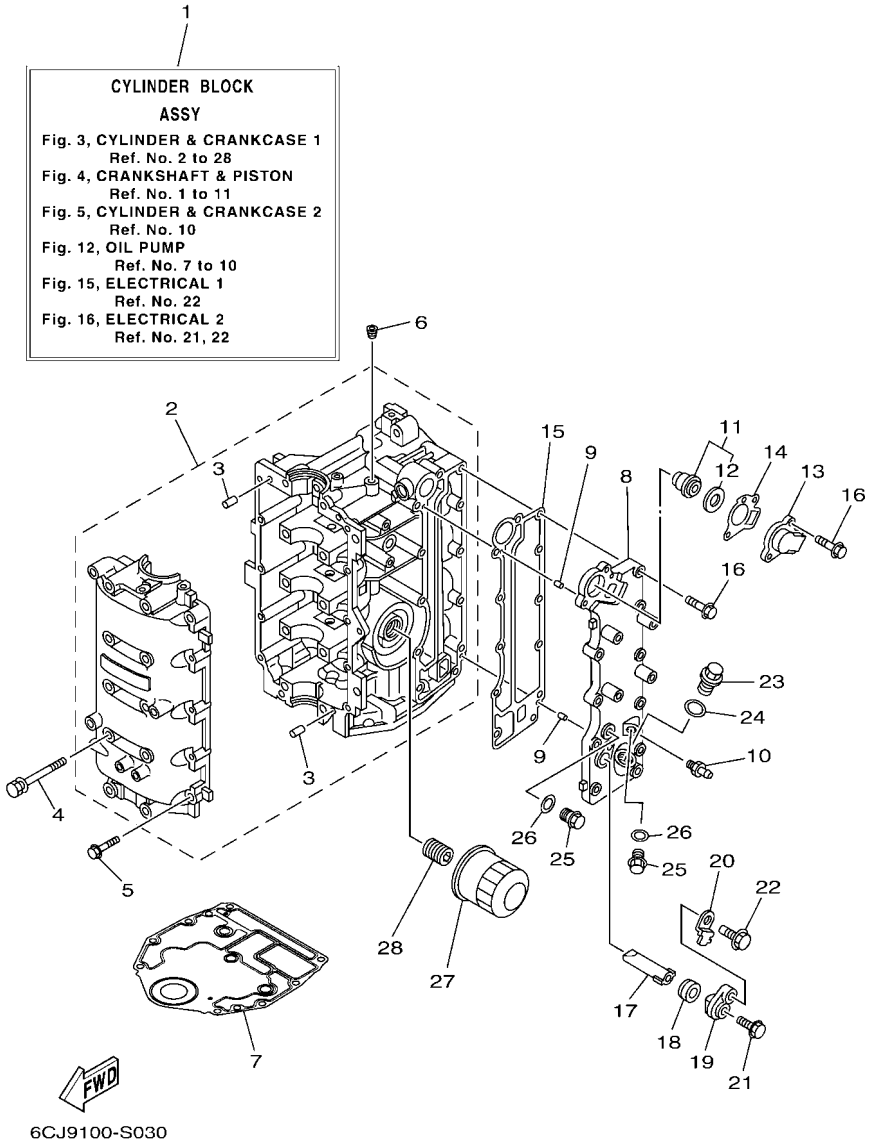

FIG. 3 CYLINDER & CRANKCASE 1 — CYLINDRE & CARTER 1

REF. NO.	PART NO. N° PIECES	DESCRIPTION DESCRIPTION	6CJA					REMARKS REMARQUES
28	6C5–12858–A0	BOLT, UNION BOULON, RACCORD	1					

FIG. 4 CRANKSHAFT & PISTON — VILEBREQUIN & PISTON

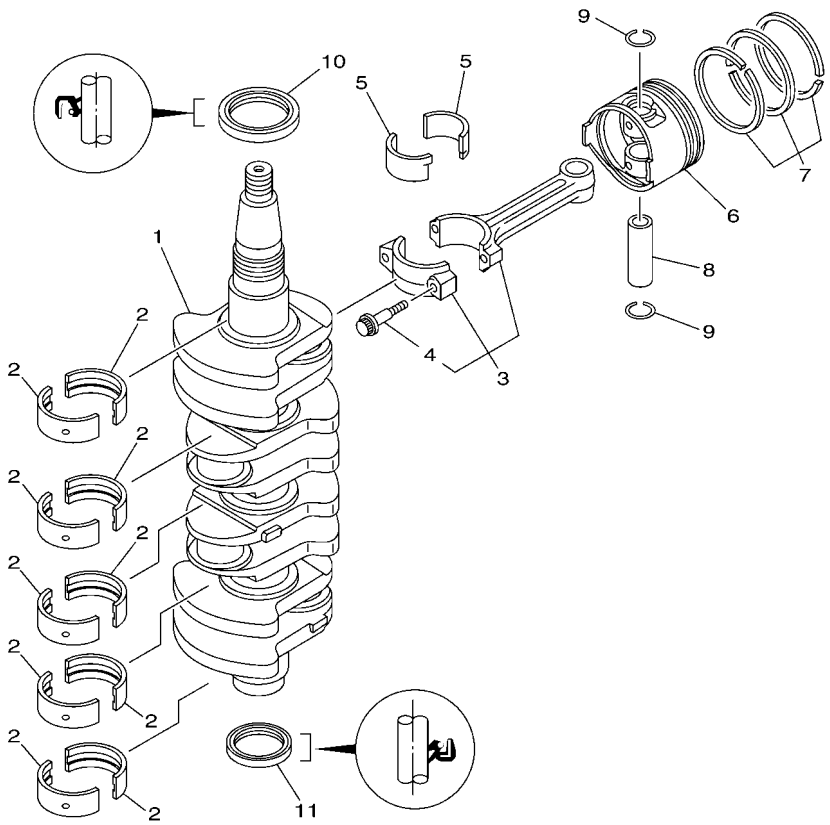

6C17110-K030

REF. NO.	PART NO. N° PIECES	DESCRIPTION DESCRIPTION	6CJA					REMARKS REMARQUES
1	6C5–11411–10	CRANKSHAFT VILEBREQUIN COMPLET	1					
2	6BG–11416–00	PLANE BEARING, CRANKSHAFT 1 COUSSINET DE VILEBREQUIN 1	10					UR YELLOW UR YELLOW
	6BG–11416–10	PLANE BEARING, CRANKSHAFT 1 COUSSINET DE VILEBREQUIN 1	10					UR RED UR RED
	6BG–11416–20	PLANE BEARING, CRANKSHAFT 1 COUSSINET DE VILEBREQUIN 1	10					UR PINK UR PINK
	6BG–11416–30	PLANE BEARING, CRANKSHAFT 1 COUSSINET DE VILEBREQUIN 1	10					UR GREEN UR GREEN
3	6C5–11650–10	CONNECTING ROD ASSY BIELLE COMPLETTE	4					
4	6C5–11654–00	.BOLT, CONNECTING ROD .BOULON, BIELLE	2					
5	6CJ–11656–00	PLANE BEARING, CONNECTING ROD ROULEMENT DE BIELLE	8					UR YELLOW UR YELLOW
	6CJ–11656–10	PLANE BEARING, CONNECTING ROD ROULEMENT DE BIELLE	8					UR RED UR RED
	6CJ–11656–20	PLANE BEARING, CONNECTING ROD ROULEMENT DE BIELLE	8					UR PINK UR PINK
	6CJ–11656–30	PLANE BEARING, CONNECTING ROD ROULEMENT DE BIELLE	8					UR GREEN UR GREEN
6	6CJ–11631–00–96	PISTON (STD) PISTON (STD)	4					
	6CJ–11635–00	PISTON (0.25MM O/S) PISTON (0.25MM O/S)	4					AP AP
	6CJ–11636–00	PISTON (0.50MM O/S) PISTON (0.50MM O/S)	4					AP AP
7	67C–11603–00	PISTON RING SET (STD) JEU DE SEGMENTS (STD)	4					
	67C–11604–00	PISTON RING SET (0.25MM O/S) JEU DE SEGMENTS (0.25MM O/S)	4					AP AP
	67C–11605–00	PISTON RING SET (0.50MM O/S) JEU DE SEGMENTS (0.50MM O/S)	4					AP AP
8	62Y–11633–00	PIN, PISTON AXE, PISTON	4					
9	93450–17129	CIRCLIP CIRCLIP	8					
10	93102–43004	OIL SEAL JOINT SPY	1					
11	93101–35002	OIL SEAL JOINT SPY	1					

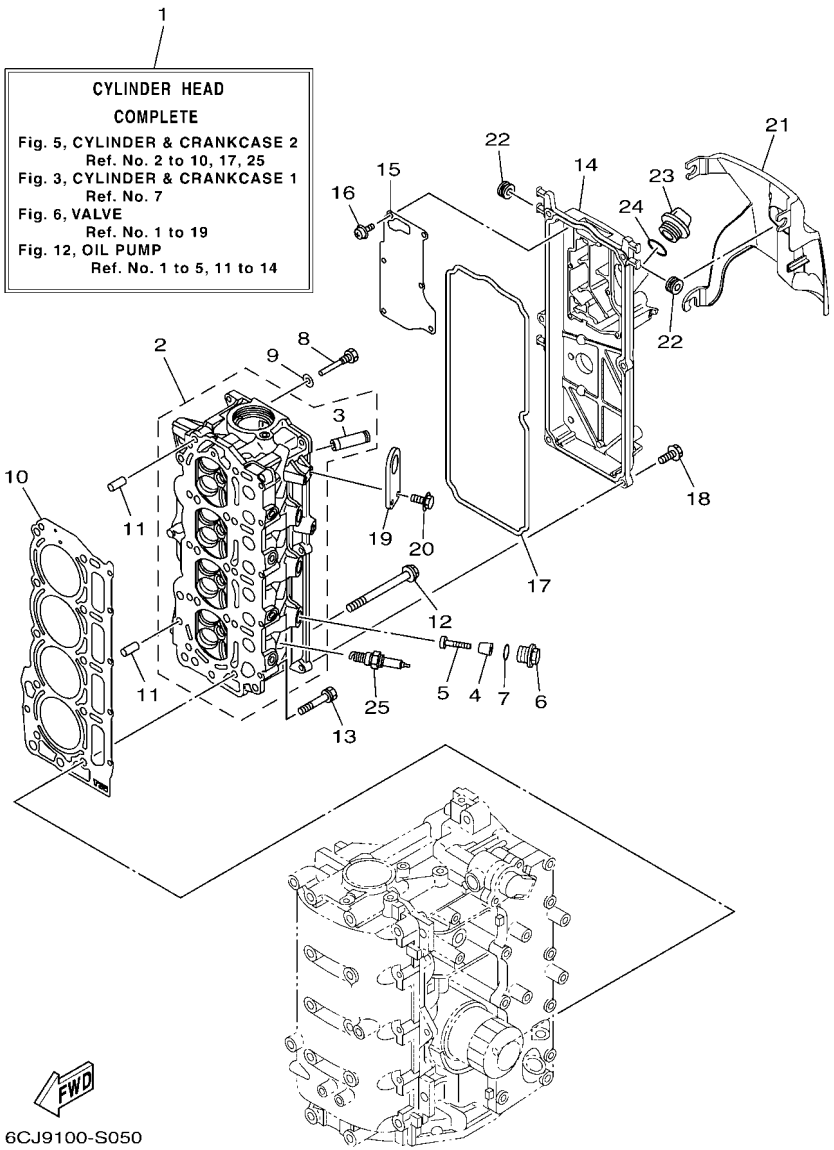

FIG. 5 CYLINDER & CRANKCASE 2 — CYLINDRE & CARTER 2

REF. NO.	PART NO. N° PIECES	DESCRIPTION DESCRIPTION	6CJA					REMARKS REMARQUES
1	6CJ–W009A–01–9S	CYLINDER HEAD COMPLETE CULASSE (ENS.)	1					
2	6CJ–11111–10–9S	HEAD, CYLINDER 1 CULASSE, 1	1					
3	6AH–11133–10	.GUIDE, VALVE 1 .GUIDE, SOUPAPE 1	16					
4	6G8–11325–00	ANODE ANODE	3					
5	98980–05025	SCREW, BIND VIS, DE PRESSION	3					
6	6G8–11197–A0	PLUG, BLIND PLOT, BORGNE	3					
7	93210–13M63	O-RING JOINT TORIQUE	3					
8	90109–06M65	BOLT BOULON	1					
9	90430–06014	GASKET JOINT	1					
10	6CJ–11181–00	GASKET, CYLINDER HEAD 1 JOINT, DE CULASSE 1	1					
11	99530–08012	PIN, DOWEL GOUJON, D'ASSEMBLAGE	2					
12	90105–09009	BOLT, FLANGE BOULON, A COLLERETTE	10					
13	90119–06MA6	BOLT, WITH WASHER BOULON, AVEC RONDELLE	5					
14	6CJ–11191–00–9S	COVER, CYLINDER HEAD 1 COUVERCLE, CULASSE 1	1					
15	6C5–11168–00	COVER, BREATHER COUVERCLE, RENIFLARD	1					
16	97607–04210	SCREW, WITH WASHER VIS, AVEC RONDELLE	6					
17	6CJ–11356–00	SEAL, CYLINDER 2 JOINT, SPY CYLINDRE	1					
18	97E95–06520	BOLT, HEXAGON W/W DEEP RECESS VIS HEXAGONAL AVC RONDELLE	6					
19	6CJ–11119–00	HANGER, ENGINE ANNEAU, LEVAGE	1					
20	97E95–06520	BOLT, HEXAGON W/W DEEP RECESS VIS HEXAGONAL AVC RONDELLE	2					
21	6CJ–11192–00	COVER, CYLINDER HEAD 2 COUVERCLE, CULASSE 2	1					
22	90480–12314	GROMMET PASSE-FIL	3					
23	6G8–15363–00	PLUG, OIL PLOT, HUILE	1					
24	93210–24M79	O-RING JOINT TORIQUE	1					
25	94702–00429	PLUG, SPARK (NGK LKR7E) BOUGIE D,ALLUMAGE (NGK LKR7E)	4					

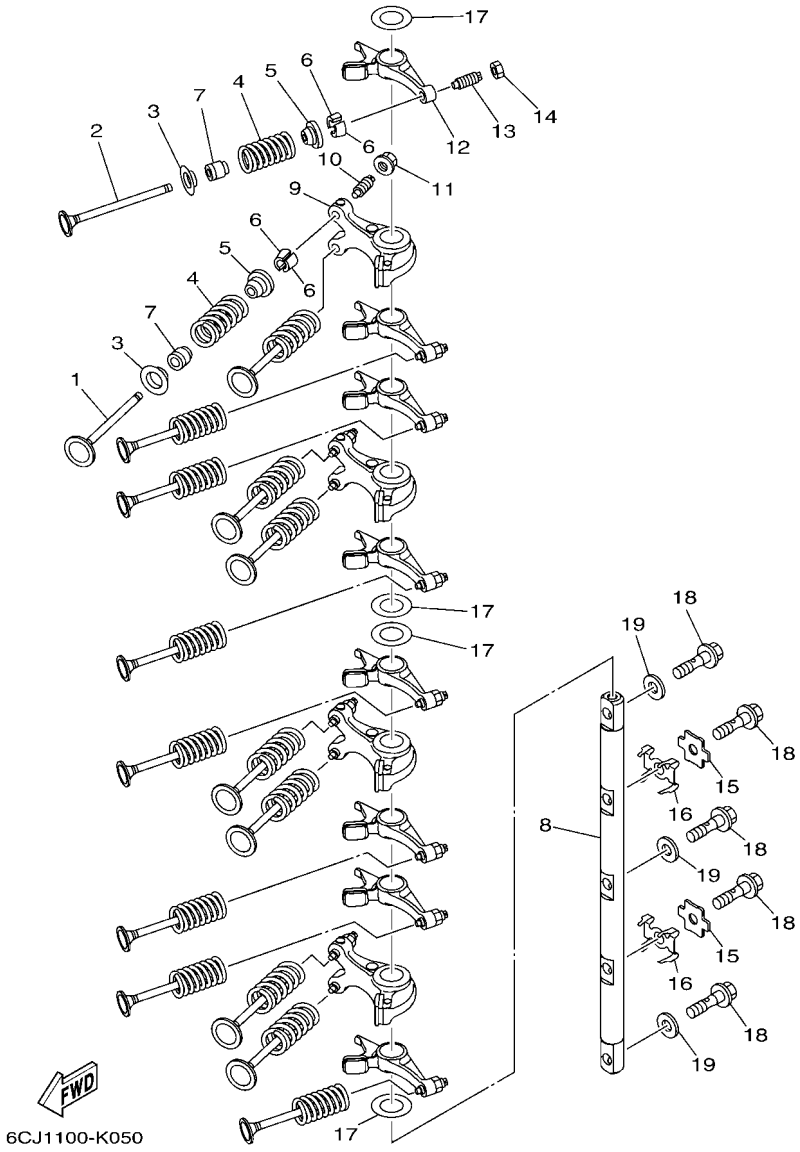

FIG. 6 VALVE — SOUPAPE

REF. NO.	PART NO. N° PIECES	DESCRIPTION DESCRIPTION	6CJA					REMARKS REMARQUES
1	6CJ–12111–00	VALVE, INTAKE SOUPAPE, ADMISSION	8					
2	6CJ–12121–10	VALVE, EXHAUST SOUPAPE, ECHAPPEMENT	8					
3	6CJ–12116–00	SEAT, VALVE SPRING SIEGE, RESSORT DE SOUPAPE	16					
4	6CJ–12113–00	SPRING, VALVE INNER RESSORT DE SOUPAPE, INTERNE	16					
5	3LD–12117–00	RETAINER, VALVE SPRING BUTEE DE RESSORT DE SOUPAPE	16					
6	3LD–12118–00	LOCK, VALVE SPRING RETAINER FRAISE, SOUPAPE	32					
7	51Y–12119–00	SEAL, VALVE STEM JOINT, QUEUE DE SOUPAPE	16					
8	6CJ–12146–00	SHAFT, ROCKER AXE, CULBUTEUR	1					
9	6CJ–12151–00	ARM, VALVE ROCKER CULBUTEUR	4					
10	6C5–12159–00	SCREW, VALVE ADJUSTING VIS, REGLAGE DE SOUPAPE	8					
11	6C5–12158–00	NUT, LOCK CONTRE-ECROU	8					
12	6CJ–12161–00	ARM, VALVE ROCKER 2 CULBUTEUR 2	8					
13	64J–12159–00	SCREW, VALVE ADJUSTING VIS, REGLAGE DE SOUPAPE	8					
14	62Y–12158–00	NUT, LOCK CONTRE-ECROU	8					
15	6CJ–12231–00	GUIDE, STOPPER 1 GUIDE, BUTEE 1	2					
16	6CJ–12233–00	PLATE, GUIDE STOPPER 1 PLAQUE, GUIDE BUTEE 1	2					
17	90201–16014	WASHER, PLATE RONDELLE, PLATE	4					
18	90401–08011	BOLT, UNION BOULON, RACCORD	5					
19	92990–08200	WASHER, PLAIN RONDELLE, PLATE	3					

FIG. 7 INTAKE 1 — ADMISSION 1

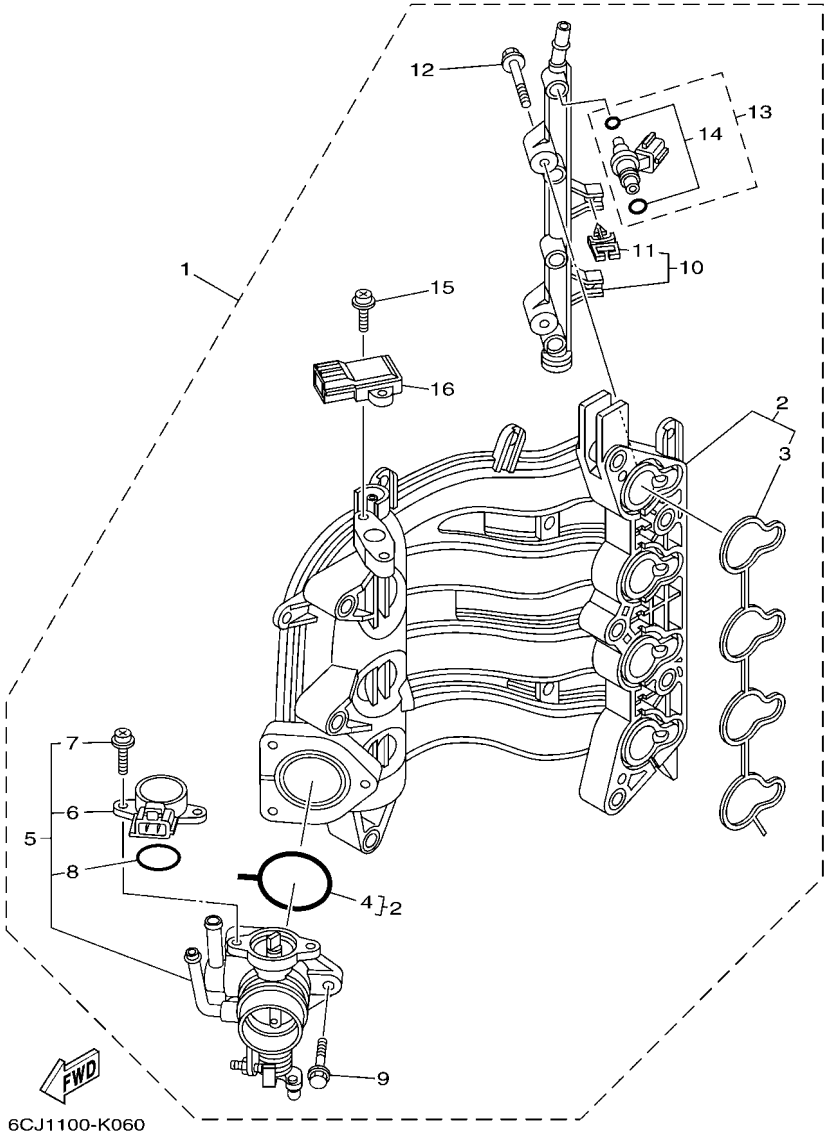

REF. NO.	PART NO. N° PIECES	DESCRIPTION DESCRIPTION	6CJA					REMARKS REMARQUES
1	6CJ–14200–02	INTAKE ASSY ADMISSION (ENS.)	1					
2	6CJ–13641–01	.MANIFOLD, INTAKE 1 .TUBULURE, ADMISSION 1	1					
3	6C5–13645–00	..GASKET, MANIFOLD 1 ..JOINT, TUBULURE 1	1					
4	6C5–13557–00	..GASKET ..JOINT	1					
5	6CJ–13750–01	.THROTTLE BODY ASSY .CARTER D'ACCELERATEUR COMPLET	1					
6	6C5–85885–00	..THROTTLE SENSOR ASSY ..SENSITOMETRE (ENS.)	1					
7	6C5–81145–00	..SCREW 1 ..VIS 1	2					
8	6C5–8182L–00	..O-RING 1 ..JOINT TORIQUE 1	1					
9	6C5–14496–00	.BOLT .BOULON	3					
10	6C5–13161–00	.PIPE, DELIVERY 1 .DURITE REFOULEMENT 1	1					
11	90464–07M56	..CLAMP ..BRIDE	2					
12	6C5–14446–00	.BOLT .BOULON	2					
13	6C5–13761–00	.INJECTOR .INJECTEUR	4					
14	6C5–1410B–00	..PACKING KIT ..POCHETTE DE JOINTS	1					
15	6C5–81146–10	.SCREW 2 .VIS 2	2					
16	68F–83688–00	.SENSOR ASSY .SONDE (ENS.)	1					

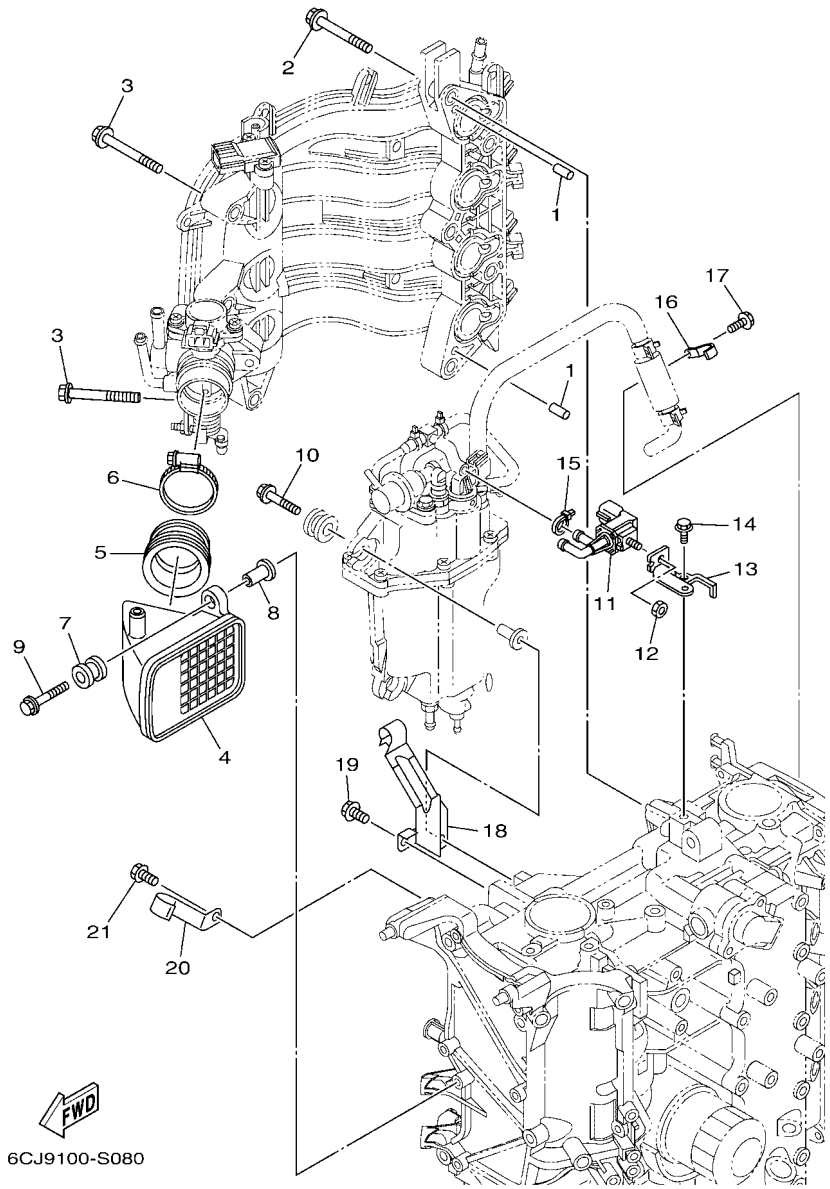

FIG. 8 INTAKE 2 — ADMISSION 2

REF. NO.	PART NO. N° PIECES	DESCRIPTION DESCRIPTION	6CJA					REMARKS REMARQUES
1	93608–12M05	PIN, DOWEL AXE	2					
2	90119–08069	BOLT, WITH WASHER BOULON, AVEC RONDELLE	5					
3	90119–06087	BOLT, WITH WASHER BOULON, AVEC RONDELLE	5					
4	6C5–14440–10	SILENCER ASSY, INTAKE SIENCIEUX D'ADMISSION	1					
5	6C5–14453–01	JOINT, AIR CLEANER 1 RACCORD, FILTRE A AIR 1	1					
6	90450–50001	HOSE CLAMP ASSY BRIDE, DE DURITE	1					
7	6A0–82317–00	DAMPER, IGNITION COIL AMORTISSEUR, BOBINE D'ALLUM	2					
8	90387–06119	COLLAR COLLERETTE	2					
9	90119–06126	BOLT, WITH WASHER BOULON, AVEC RONDELLE	2					
10	90119–06M61	BOLT, WITH WASHER BOULON, AVEC RONDELLE	3					
11	6C5–86120–00	SOLENOID VALVE ASSY SOLENOIDE	1					
12	95380–06600	NUT, HEXAGON ECROU	1					
13	6BG–86112–10	STAY, SOLENOID SUPPORT, SOLENOIDE	1					
14	97E95–06516	BOLT, HEXAGON W/W DEEP RECESS VIS HEXAGONAL AVC RONDELLE	1					
15	90465–11M10	CLAMP BRIDE	1					
16	6CJ–13428–00	BRACKET, STRAINER 1 SUPPORT, FILTRE 1	1					
17	97E95–06516	BOLT, HEXAGON W/W DEEP RECESS VIS HEXAGONAL AVC RONDELLE	1					
18	6C5–15378–00	HOLDER SUPPORT	1					
19	97E95–06514	BOLT, HEXAGON W/W DEEP RECESS VIS HEXAGONAL AVC RONDELLE	1					
20	6C5–15378–11	HOLDER SUPPORT	1					
21	97E95–06516	BOLT, HEXAGON W/W DEEP RECESS VIS HEXAGONAL AVC RONDELLE	1					

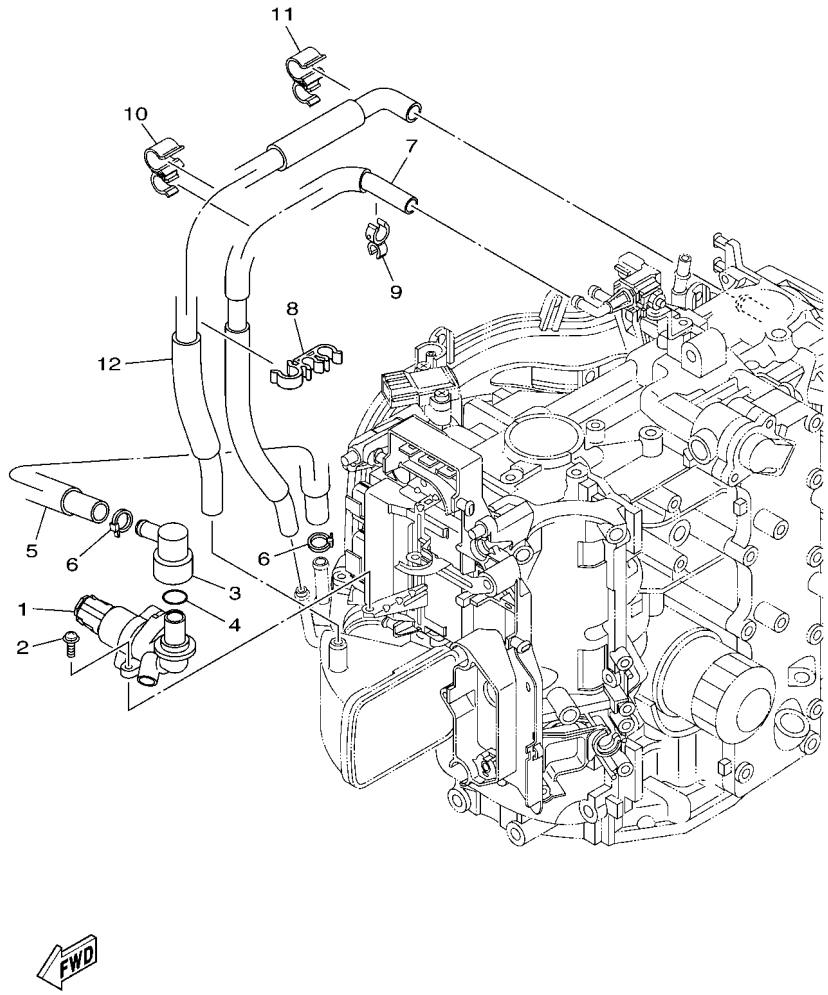

6CJ1100-K080

FIG. 9 INTAKE 3 — ADMISSION 3

REF. NO.	PART NO. N° PIECES	DESCRIPTION DESCRIPTION	6CJA					REMARKS REMARQUES
1	6C5–13713–00	VALVE, IDLE SPEED CONTROL SOUPAPE, AJUSTEMENT DE VITESSE	1					
2	97980–05214	SCREW, WITH WASHER VIS, AVEC RONDELLE	2					
3	6CJ–11372–00	NIPPLE, HOSE RACCORD, TUYAU	1					
4	93210–33003	O-RING JOINT TORIQUE	1					
5	6CJ–13543–00	HOSE, AIR DURITE, A AIR	1					
6	90465–11M10	CLAMP BRIDE	2					
7	6CJ–12576–00	HOSE 1 TUYAU 1	1					
8	90464–15008	CLAMP BRIDE	1					
9	90464–12006	CLAMP BRIDE	1					
10	90464–15007	CLAMP BRIDE	1					
11	90464–15007	CLAMP BRIDE	1					
12	6CJ–1531A–00	HOSE, BREATHER 1 DURITE DE RENIFLARD 1	1					

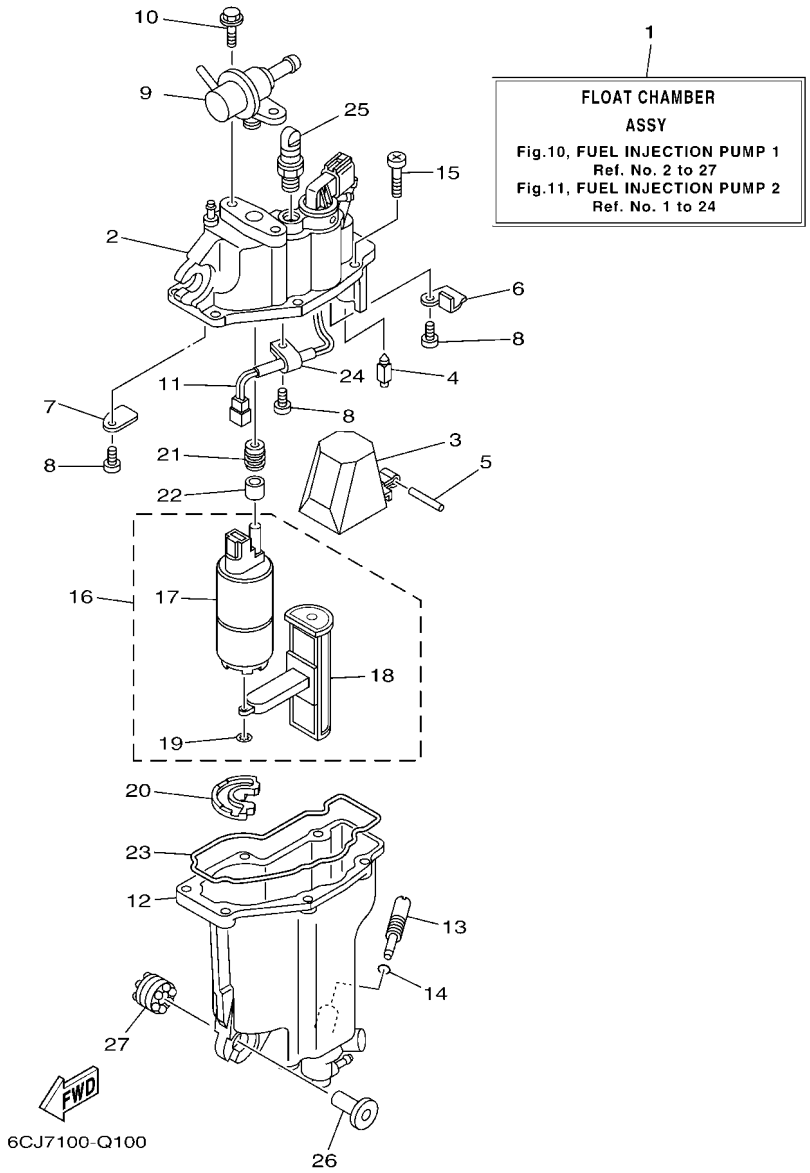

FIG. 10 FUEL INJECTION PUMP 1 — POMPE A INJECTEUR 1

REF. NO.	PART NO. N° PIECES	DESCRIPTION DESCRIPTION	6CJA					REMARKS REMARQUES
1	6CJ–14180–03	FLOAT CHAMBER ASSY CUVE DE FLOTTEUR	1					
2	6C5–14182–20	COVER, FLOAT CHAMBER COUVERCLE, CUVE DE FLOTTEUR	1					
3	6C5–14985–00	FLOAT FLOTTEUR	1					
4	6C5–14546–10	VALVE, NEEDLE POINTEAU	1					
5	6C5–14386–00	PIN, FLOAT AXE, FLOTTEUR	1					
6	6C5–2441R–10	PLATE, BAFFLE 1 SEPARATEUR 1	1					
7	6C5–2441T–10	PLATE, BAFFLE 2 SEPARATEUR 2	1					
8	6C5–24453–00	SCREW VIS	3					
9	6C5–13906–01	REGULATOR, PRESSURE REGULATEUR DE PRESSION	1					
10	6C5–24592–00	BOLT BOLTE	2					
11	6C5–87226–00	WIRE HARNESS ASSY ENS. FAISCEAU ELECTRIQUE	1					
12	6C5–14960–20	BODY ASSY CARTER (ENS.)	1					
13	6C5–14191–00	PLUG, DRAIN PLOT, VIDANGE	1					
14	6C5–14397–00	O-RING JOINT TORIQUE	1					
15	6C5–14567–00	SCREW VIS	6					
16	6C5–13910–10	FUEL PUMP ASSY POMPE A ESSENCE COMPLET	1					
17	6C5–13907–00	.FUEL PUMP COMP. .POMPE A CARBURANT COMP.	1					
18	6C5–13915–00	.FILTER .FILTRE	1					
19	6C5–14127–10	.CLIP .JONC	1					
20	6C5–13593–00	DAMPER AMORTISSEUR	1					
21	6C5–13781–00	DAMPER, PUMP AMORTISSEUR, POMPE	1					
22	6C5–13716–00	COLLAR COLLERETTE	1					
23	6C5–14984–10	GASKET, FLOAT CHAMBER JOINT, CUVE DE FLOTTEUR	1					
24	6C5–21337–10	CLAMP, CABLE COLLIER, CABLE	1					
25	6C5–14225–00	CAP COUVERCLE	1					
26	90387–06M03	COLLAR COLLERETTE	3					
27	69L–85516–00	SPACER ENTRETOISE	3					

FIG. 11 FUEL INJECTION PUMP 2 POMPE A INJECTEUR 2

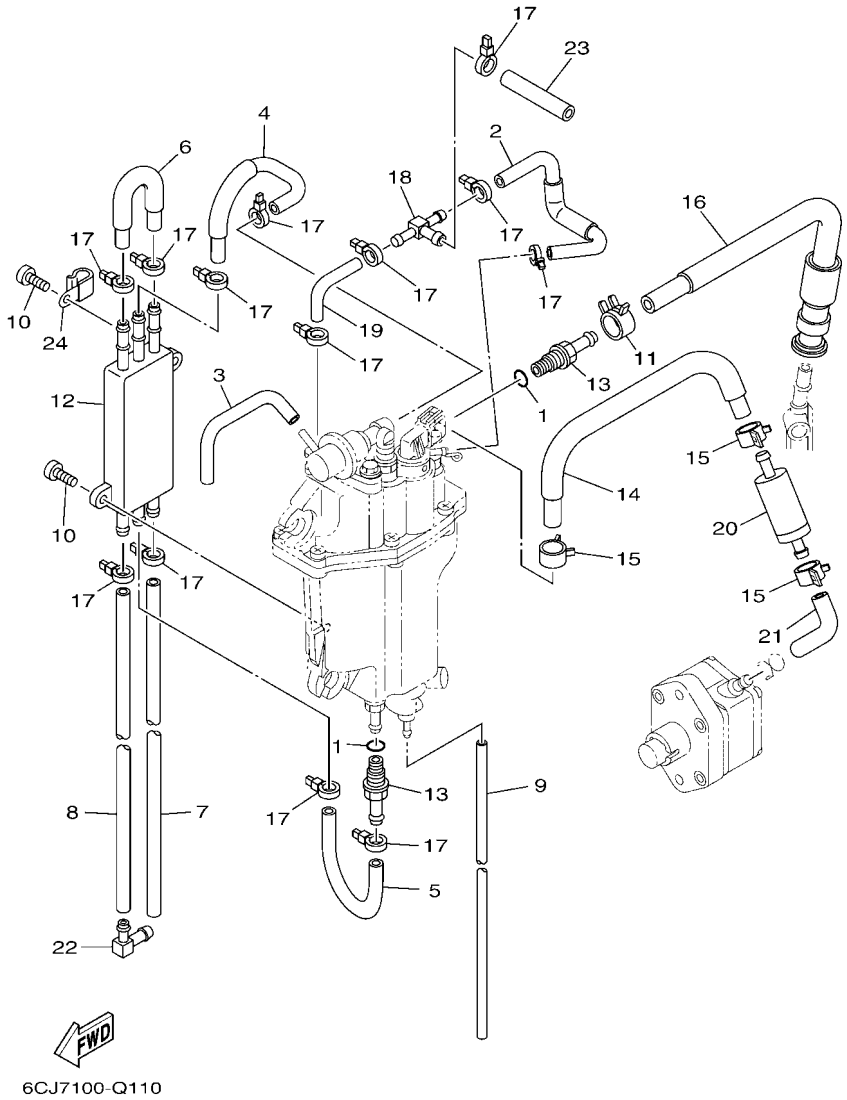

REF. NO.	PART NO. N° PIECES	DESCRIPTION DESCRIPTION	6CJA					REMARKS REMARQUES
1	6C5–13739–00	O-RING JOINT TORIQUE	2					
2	6CJ–13546–00	HOSE 2 DURITE 2	1					
3	6C5–13542–00	HOSE, VACUUM SENSING 1 DURITE, SOUS VIDE DETECTION 1	1					
4	6CJ–24321–00	PIPE 10 DURITE 10	1					
5	6C5–24322–00	PIPE 11 DURITE 11	1					
6	6CJ–24323–00	PIPE 12 DURITE 12	1					
7	6CJ–24324–00	PIPE 13 DURITE 13	1					
8	6CJ–24325–00	PIPE 14 DURITE 14	1					
9	6BG–14149–00	PIPE DURITE	1					
10	6C5–24444–00	SCREW VIS	2					
11	6C5–13577–00	CLIP AGRAFE	1					
12	6C5–21841–01	COOLER RADIATEUR	1					
13	6C5–14251–00	NIPPLE RACCORD	2					
14	6C5–14148–00	PIPE DURITE	1					
15	6BG–24387–00	CLIP SANDOW	3					
16	6CJ–13974–10	PIPE, FUEL 4 TUBE 4, CARBURANT	1					
17	90465–11M10	CLAMP BRIDE	13					
18	6C5–24379–00	PIPE, JOINT 4 DURITE RACCORDEMENT 4	1					
19	6BG–13545–00	HOSE 1 DURITE 1	1					
20	6C5–24251–00	STRAINER 1 FILTRE 1	1					
21	6CJ–2451B–00	HOSE, FUEL INLET DURITE	1					
22	6C5–1410F–00	NIPPLE, 1 RACCORD, 1	1					
23	6C5–13547–00	HOSE 3 DURITE 3	1					
24	90465–08M83	CLAMP BRIDE	1					

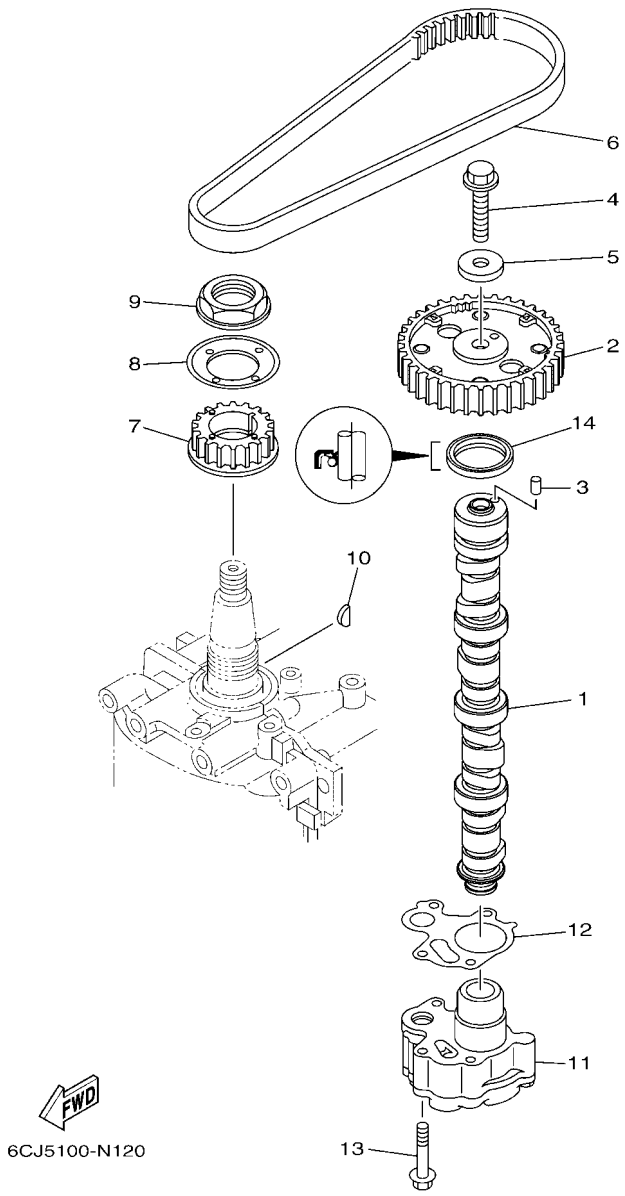

FIG. 12 OIL PUMP — POMPE A HUILE

REF. NO.	PART NO. N° PIECES	DESCRIPTION DESCRIPTION	6CJA					REMARKS REMARQUES
1	6CJ–12171–00	CAMSHAFT 1 ARBRE A CAMES 1	1					
2	6C5–11537–10	GEAR, DRIVEN PIGNON SECONDAIRE	1					
3	93605–17002	PIN, DOWEL AXE	1					
4	95817–10035	BOLT, FLANGE BOULON, A COLLERETTE	1					
5	90201–10144	WASHER, PLATE RONDELLE, PLATE	1					
6	6C5–46241–00	BELT COURROIE TRAPEZOIDALE	1					
7	6C5–11536–00	GEAR, DRIVE ENGRENAGE, MENANT	1					
8	62Y–11557–00	WASHER 1 RONDELLE 1	1					
9	90179–35001	NUT ECROU	1					
10	90280–03017	KEY, WOODRUFF CLAVETTE, DEMI-LUNE	1					
11	6CJ–13300–00	OIL PUMP ASSY POMPE A HUILE COMPLETE	1					
12	6C5–13329–00	GASKET, PUMP COVER JOINT, COUVERCLE DE POMPE	1					
13	90119–06025	BOLT, WITH WASHER BOULON, AVEC RONDELLE	4					
14	93102–37M40	OIL SEAL JOINT SPY	1					

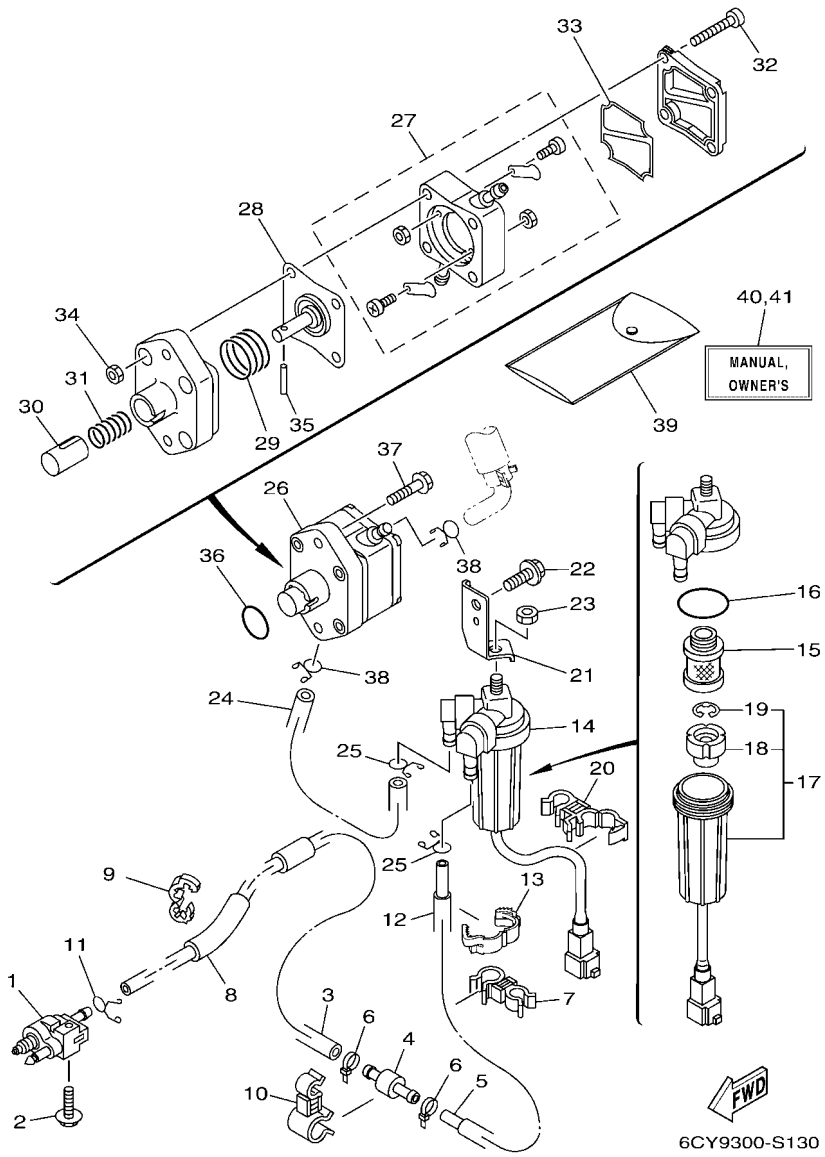

FIG. 13 FUEL — CARBURANT

REF. NO.	PART NO. N° PIECES	DESCRIPTION DESCRIPTION	6CJA					REMARKS REMARQUES
1	6G1–24304–10	FUEL PIPE JOINT COMP. 1 DURITE RACCORDEMT. A ESSENCE	1					
2	97E95–06525	BOLT, HEXAGON W/W DEEP RECESS VIS HEXAGONAL AVC RONDELLE	1					
3	6BG–24313–00	PIPE 3 DURITE 3	1					
4	67F–24377–00	PIPE, JOINT 2 DURITE RACCORDEMENT 2	1					
5	90445–133F0	HOSE (L195) DURITE (L195)	1					
6	90465–11M10	CLAMP BRIDE	2					
7	90464–12004	CLAMP BRIDE	1					
8	90446–13M11	HOSE (L65) DURITE (L65)	1					
9	90464–13227	CLAMP BRIDE	1					
10	90464–16017	CLAMP BRIDE	1					
11	90467–09M17	CLIP JONC	1					
12	90446–15006	HOSE (L150) DURITE (L150)	1					
13	90464–14010	CLAMP BRIDE	1					
14	6D8–24560–01	FILTER ASSY ENS FILTRE	1					
15	6D8–24563–00	.ELEMENT, FILTER .ELEMENT, FILTRE	1					
16	6D8–24564–00	.GASKET .JOINT	1					
17	6D8–24562–00	.CUP, FILTER .CUVETTE, FILTRE	1					
18	6D8–24469–00	..FLOAT, WATER LEVEL ..FLOTTEUR	1					
19	6D8–24519–00	..CLIP ..JONC	1					
20	90464–12012	CLAMP BRIDE	1					
21	6CJ–24566–00	BRACKET, FILTER SUPPORT, FILTRE	1					
22	95D95–08016	BOLT, FLANGE DEEP RECESS BOULON FIXATION	1					
23	95380–08600	NUT ECROU	1					
24	6BG–24311–00	PIPE, FUEL 1 DURITE A ESSENCE	1					
25	90467–11M08	CLIP JONC	2					
26	6CJ–24410–00	FUEL PUMP ASSY POMPE A ESSENCE	1					
27	6CJ–24415–00	.BODY 4 .CORPS 4	1					

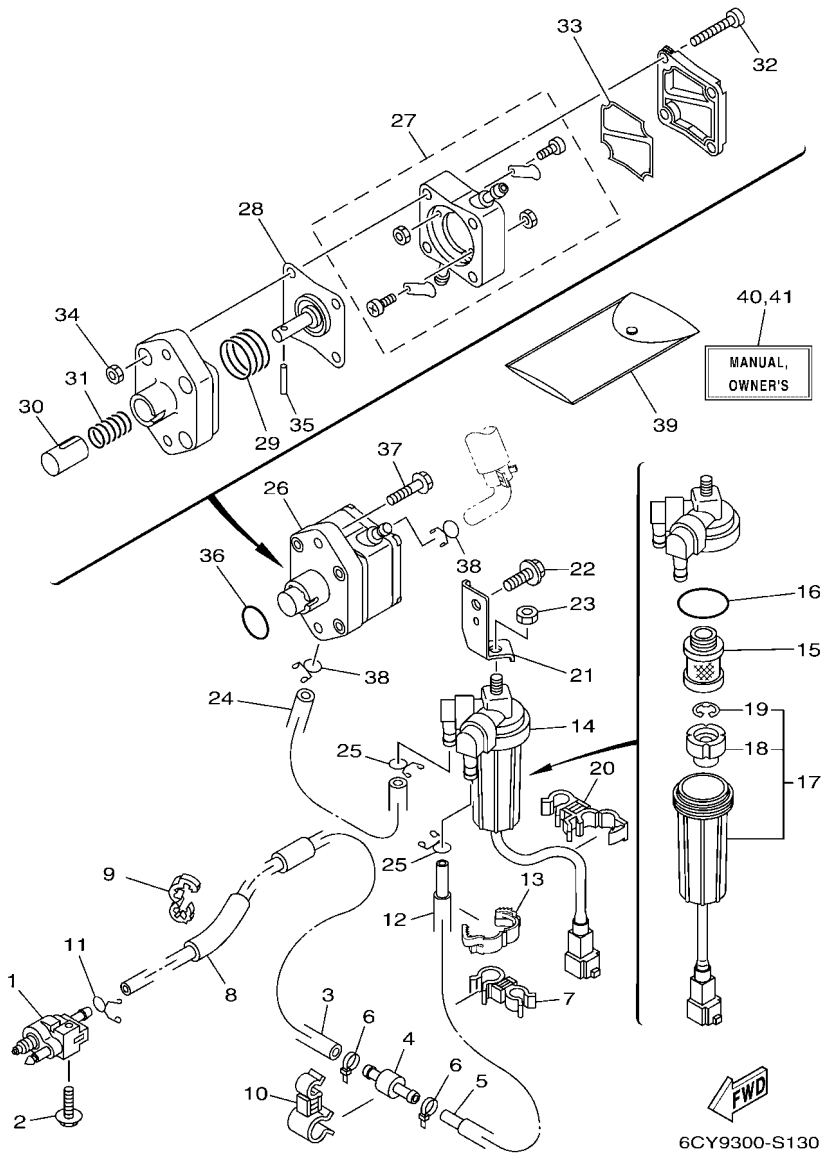

FIG. 13 FUEL — CARBURANT

REF. NO.	PART NO. N° PIECES	DESCRIPTION DESCRIPTION	6CJA					REMARKS REMARQUES
28	62Y–24411–02	.DIAPHRAGM .DIAPHRAGME	1					
29	62Y–24423–00	.SPRING, DIAPHRAGM .RESSORT, DIAPHRAGME	1					
30	6CJ–13131–00	.PLUNGER .PLONGEUR	1					
31	6CJ–24454–00	.SPRING .RESSORT	1					
32	62Y–24444–01	.SCREW .VIS	4					
33	6C5–24471–00	.DIAPHRAGM .DIAPHRAGME	1					
34	95380–05600	.NUT .ECROU	4					
35	6CJ–24374–00	.PIN .GOUPILLE	1					
36	93210–24M79	O-RING JOINT TORIQUE	1					
37	97E95–06530	BOLT, HEXAGON W/W DEEP RECESS VIS HEXAGONAL AVC RONDELLE	2					
38	90467–10M04	CLIP JONC	2					
39	6CJ–28100–00	TOOL KIT TROUSSE A OUTILS	1					AP AP
40	6C1–28199–7H–E0	MANUAL,OWNER'S MANUEL D'UTILISATION	1					UR (E) UR (E)
	6C1–28199–7H–F0	MANUAL,OWNER'S MANUEL D'UTILISATION	1					UR (F) UR (F)
	6C1–28199–7H–S0	MANUAL,OWNER'S MANUEL D'UTILISATION	1					UR (ES) UR (ES)
	6C1–28199–7H–G0	MANUAL,OWNER'S MANUEL D'UTILISATION	1					UR (D) UR (D)
	6C1–28199–7H–D0	MANUAL,OWNER'S MANUEL D'UTILISATION	1					UR (NL) UR (NL)
	6C1–28199–7H–H0	MANUAL,OWNER'S MANUEL D'UTILISATION	1					UR (I) UR (I)
41	6C1–28199–8H–K0	MANUAL,OWNER'S MANUEL D'UTILISATION	1					UR (DK) UR (DK)
	6C1–28199–8H–R0	MANUAL,OWNER'S MANUEL D'UTILISATION	1					UR (GR) UR (GR)
	6C1–28199–8H–P0	MANUAL,OWNER'S MANUEL D'UTILISATION	1					UR (P) UR (P)
	6C1–28199–8H–N0	MANUAL,OWNER'S MANUEL D'UTILISATION	1					UR (N) UR (N)
	6C1–28199–8H–M0	MANUAL,OWNER'S MANUEL D'UTILISATION	1					UR (S) UR (S)
	6C1–28199–8H–L0	MANUAL,OWNER'S MANUEL D'UTILISATION	1					UR (SF) UR (SF)

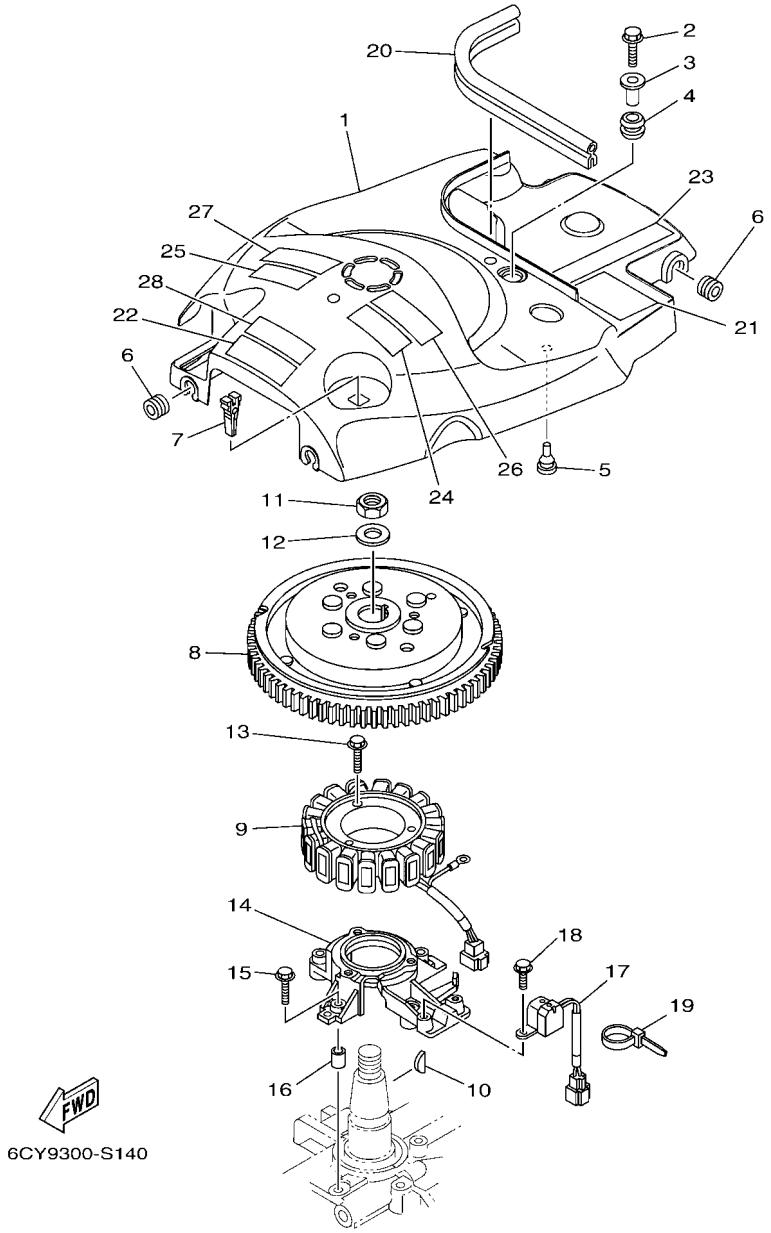

FIG. 14 GENERATOR — GENERATRICE

REF. NO.	PART NO. N° PIECES	DESCRIPTION DESCRIPTION	6CJA					REMARKS REMARQUES
1	6CJ–81337–10	COVER, FLYWHEEL COUVERCLE, VOLANT	1					
2	95D95–06020	BOLT, FLANGE DEEP RECESS BOULON FIXATION	1					
3	90387–06285	COLLAR COLLERETTE	1					
4	90480–15M31	GROMMET PASSE-FIL	1					
5	90480–06M19	GROMMET PASSE-FIL	1					
6	90480–12314	GROMMET PASSE-FIL	4					
7	67F–2812A–00	PULLER, FUSE TENDEUR, FUSIBLE	1					
8	6C5–81450–00	ROTOR ASSY ROTOR COMPLET	1					
9	6C5–81410–01	STATOR ASSY STATOR COMPLET	1					
10	6H4–11545–00	KEY, WOODRUFF CLAVETTE, DEMI-LUNE	1					
11	90170–20137	NUT ECROU	1					
12	90201–21M18	WASHER, PLATE RONDELLE, PLATE	1					
13	95023–06030	BOLT BOULON, A COLLERETTE	3					
14	6C5–85561–00	BASE, MAGNETO BASE, MAGNETO	1					
15	95023–06030	BOLT BOULON, A COLLERETTE	4					
16	99530–08012	PIN, DOWEL GOUJON, D'ASSEMBLAGE	2					
17	62Y–85580–00	COIL, PULSER BOBINE, PULSEUR	1					
18	97595–05512	BOLT, WITH WASHER VIS HEXAGONAL AVC RONDELLE	2					
19	90465–13M97	CLAMP BRIDE	1					
20	6BG–42617–00	DAMPER, FORM BOURRELET, CAOUTCHOUC	1					
21	62Y–83626–00	MARK 6 MARK 6	1					
22	6CJ–81919–00	GRAPHIC, REGULATOR ADHESIF, REGULATEUR	1					
23	6C5–13437–63	MARK, CAUTION MAKER	1					
24	6EE–81995–40	LABEL, WARNING ETIQUETTE, AVERTISSEMENT	1					
25	6EE–81995–50	LABEL, WARNING ETIQUETTE, AVERTISSEMENT	1					
26	6EE–81994–40	LABEL, SAFETY ETIQUETTE, SECURITE	1					
27	6EE–81994–50	LABEL, SAFETY ETIQUETTE, SECURITE	1					

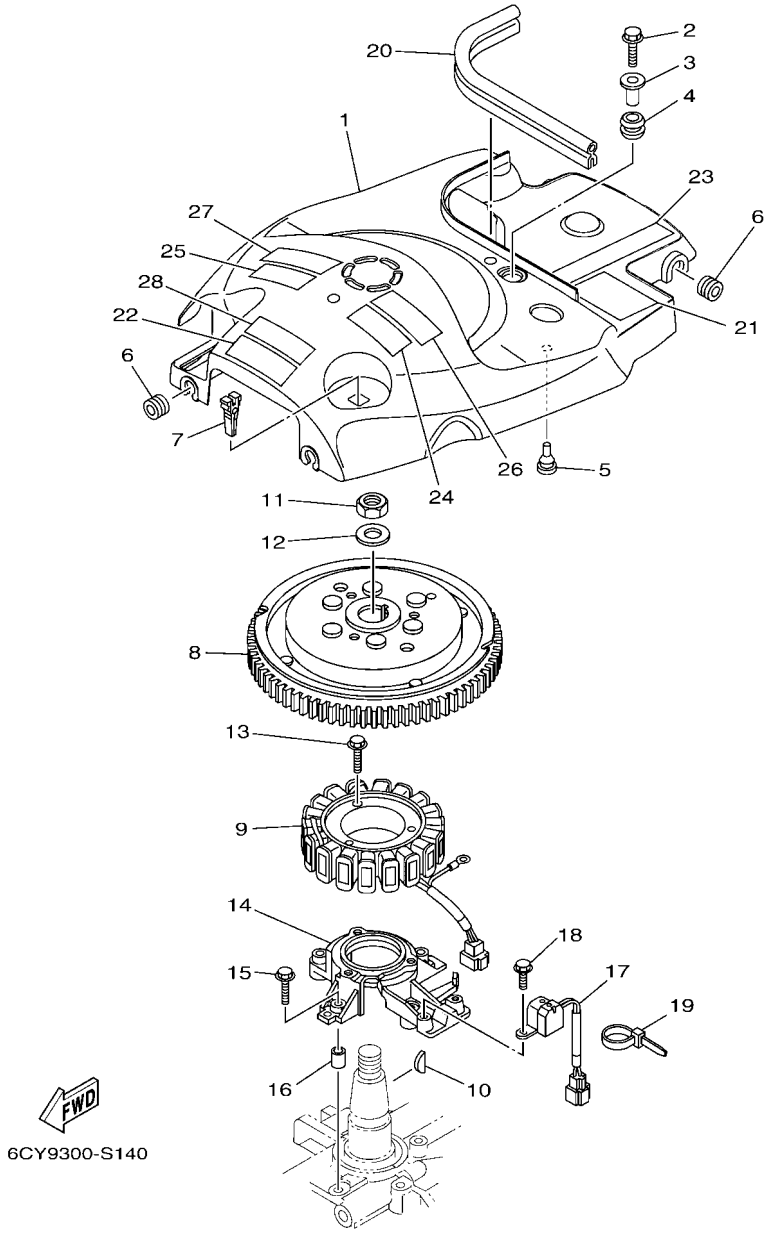

FIG. 14 GENERATOR — GENERATRICE

REF. NO.	PART NO. N° PIECES	DESCRIPTION DESCRIPTION	6CJA					REMARKS REMARQUES
28	6AG–81996–00	MARK MARQUE	1					

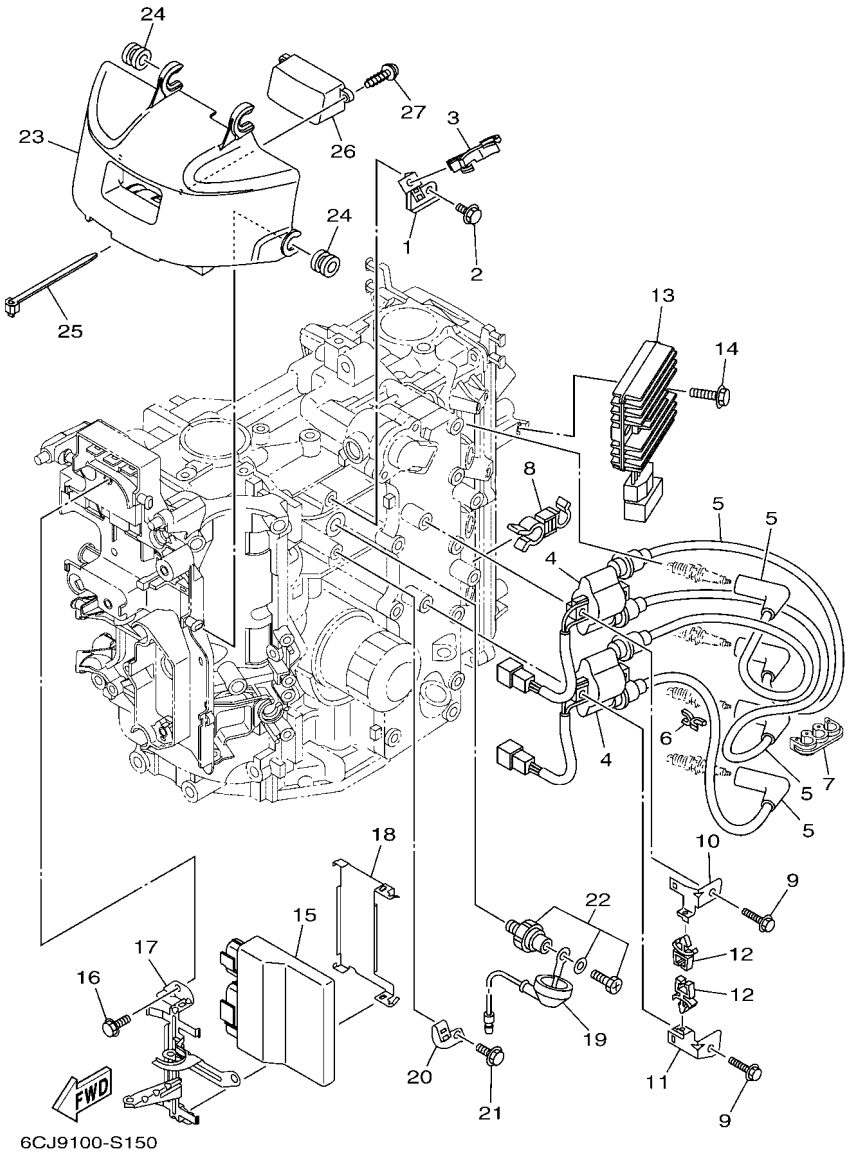

FIG. 15 ELECTRICAL 1 — PARTIE ELECTRIQUE 1

REF. NO.	PART NO. N° PIECES	DESCRIPTION DESCRIPTION	6CJA					REMARKS REMARQUES
1	6C5–85525–00	PLATE PLAQUE	1					
2	97E95–06514	BOLT, HEXAGON W/W DEEP RECESS VIS HEXAGONAL AVC RONDELLE	1					
3	90464–18246	CLAMP BRIDE	1					
4	63P–82310–01	IGNITION COIL ASSY BOBINE D'ALLUMAGE	2					
5	6CJ–82340–00	HIGH TENSION CORD ASSY 1 CABLE HAUTE TENSION 1	4					
6	90464–07M41	CLAMP BRIDE	1					
7	90464–07M05	CLAMP BRIDE	1					
8	90464–13013	CLAMP BRIDE	1					
9	97E95–06525	BOLT, HEXAGON W/W DEEP RECESS VIS HEXAGONAL AVC RONDELLE	4					
10	6C5–82316–01	BRACKET, IGNITION COIL SUPPORT, BOBINE D'ALLUMAGE	1					
11	6C5–82316–11	BRACKET, IGNITION COIL SUPPORT, BOBINE D'ALLUMAGE	1					
12	90464–06001	CLAMP BRIDE	2					
13	68V–81960–10	RECTIFIER & REGULATOR ASSY REDRESSEUR REGULATEUR CPLT	1					
14	97E95–06525	BOLT, HEXAGON W/W DEEP RECESS VIS HEXAGONAL AVC RONDELLE	2					
15	6CJ–8591A–12	ENGINE CONTROL UNIT ASSY BLOC DE CONTROL	1					
16	97E95–06516	BOLT, HEXAGON W/W DEEP RECESS VIS HEXAGONAL AVC RONDELLE	3					
17	6CJ–82588–00	PLATE PLAQUE	1					
18	6CJ–8253B–00	PLATE, LOCK PLAQUE BUTEE	1					
19	68V–81315–00	LEAD WIRE ASSY FIL	1					
20	6C5–82388–10	PLATE PLAQUETTE	1					
21	97E95–06514	BOLT, HEXAGON W/W DEEP RECESS VIS HEXAGONAL AVC RONDELLE	1					
22	64J–82504–00	OIL PRESSURE SWITCH ASSY CONTACTEUR DE PRESSION D'HUILE	1					
23	6CJ–81942–00	COVER COUVERCLE	1					
24	90480–12314	GROMMET PASSE-FIL	4					
25	90465–13M24	CLAMP BRIDE	1					
26	6CJ–83559–00	COVER, METER COUVERCLE, COMPTEUR	1					
27	90167–05009	SCREW, TAPPING VIS, TETE FRAISEE	2					

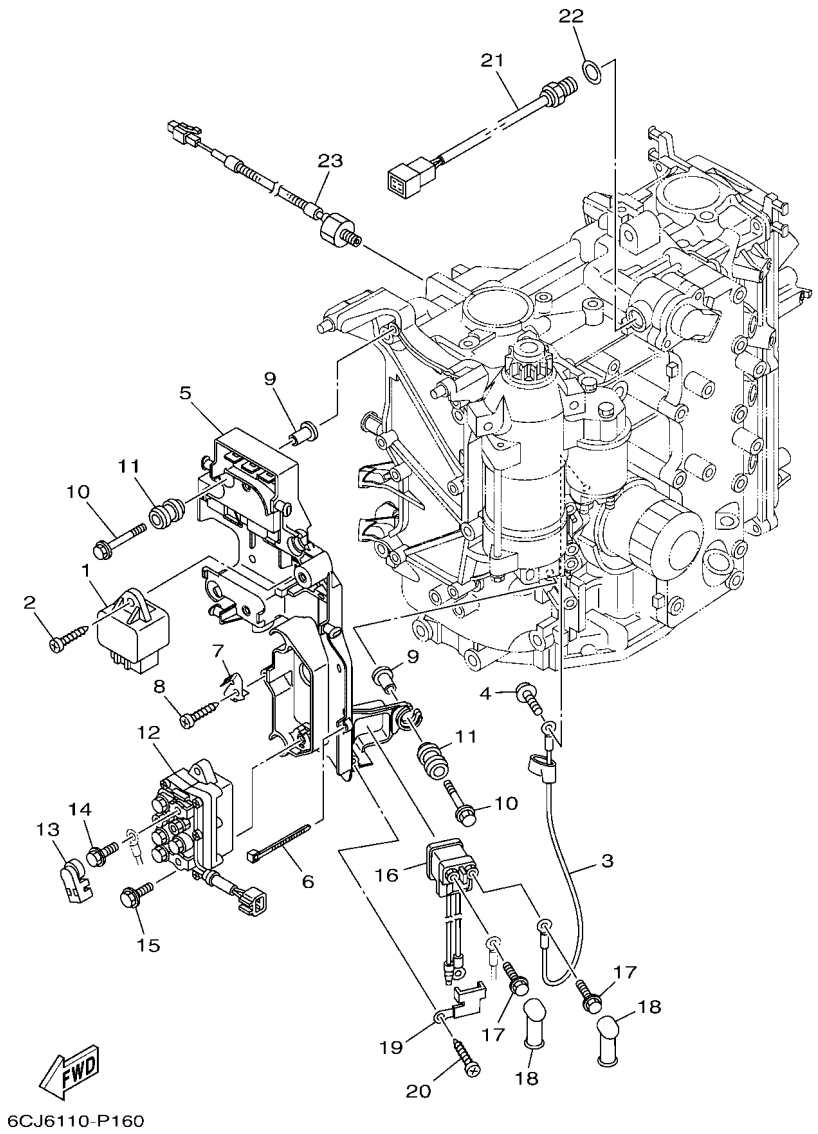

FIG. 16 ELECTRICAL 2 — PARTIE ELECTRIQUE 2

REF. NO.	PART NO. N° PIECES	DESCRIPTION DESCRIPTION	6CJA					REMARKS REMARQUES
1	60E–81950–00	RELAY ASSY RELAIS COMPLET	1					
2	97780–60620	SCREW, TAPPING VIS, TETE BOMBEE	1					
3	6C5–81815–00	CORD, STARTER MOTOR FIL, DEMARREUR ELECTRIQUE	1					
4	90159–04005	SCREW, WITH WASHER VIS, AVEC RONDELLE	1					
5	6CJ–81948–01	BRACKET SUPPORT	1					
6	90465–13M97	CLAMP BRIDE	4					
7	6CJ–85548–00	HOLDER SUPPORT	1					
8	97780–60620	SCREW, TAPPING VIS, TETE BOMBEE	1					
9	90387–06119	COLLAR COLLERETTE	6					
10	90119–06M59	BOLT, WITH WASHER BOULON, AVEC RONDELLE	6					
11	6A0–82317–00	DAMPER, IGNITION COIL AMORTISSEUR, BOBINE D'ALLUM	6					
12	63P–81950–00	RELAY ASSY RELAIS COMPLET	1					
13	6P2–8183X–00	CAP, TERMINAL COUVERCLE, BORNE	2					
14	97E95–06610	BOLT, HEXAGON W/W DEEP RECESS VIS HEXAGONAL AVC RONDELLE	2					
15	97E95–06520	BOLT, HEXAGON W/W DEEP RECESS VIS HEXAGONAL AVC RONDELLE	2					
16	68V–8194A–00	RELAY RELAIS	1					
17	97E95–06610	BOLT, HEXAGON W/W DEEP RECESS VIS HEXAGONAL AVC RONDELLE	2					
18	6G5–82119–00	COVER, LEAD WIRE GARNITURE, FIL	2					
19	68F–81953–00	STAY, RELAY SUPPORT, RELAIS	1					
20	97780–60620	SCREW, TAPPING VIS, TETE BOMBEE	1					
21	6CJ–85790–00	THERMOSENSOR ASSY SENSITOMETRE	1					
22	90430–14115	GASKET JOINT	1					
23	6CJ–85780–00	SENSOR, KNOCK SONDE DE COGNEMENT	1					

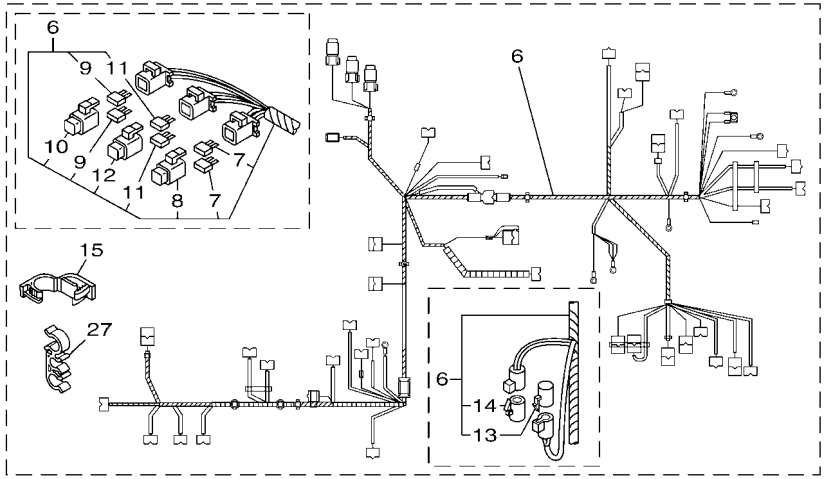

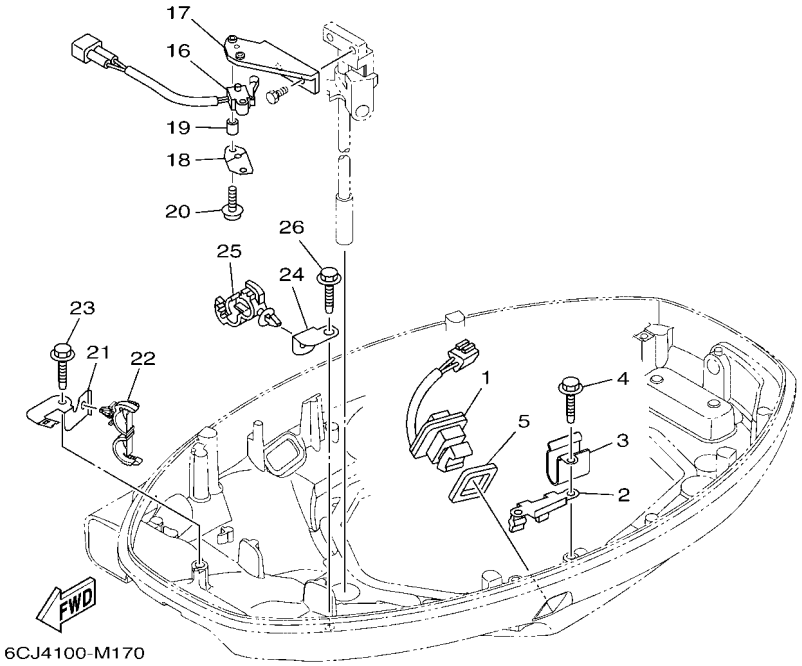

6CJ4100-M170

FIG. 17 ELECTRICAL 3 — PARTIE ELECTRIQUE 3

REF. NO.	PART NO. N° PIECES	DESCRIPTION DESCRIPTION	6CJA					REMARKS REMARQUES
1	69J–82563–01	TRIM & TILT SWITCH ASSY INCLINER ET PARER COMMUTATEUR	1					
2	6BG–83614–00	BRACKET SUPPORT	1					
3	90465–08M89	CLAMP BRIDE	1					
4	90109–06M86	BOLT BOULON	2					
5	69J–82587–00	GASKET JOINT	1					
6	6CJ–82590–12	WIRE HARNESS ASSY FAISCEAU DE FILS COMPLET	1					FOR TILT LIMIT FOR TILT LIMIT
7	67F–82151–00	.FUSE (20A) .FUSIBLE (20A)	2					
8	67F–8215B–10	.CAP (YELLOW) .BOUCHON (YELLOW)	1					
9	67F–82151–10	.FUSE (30A) .FUSIBLE (30A)	2					
10	67F–8215B–20	.CAP (GREEN) .BOUCHON (GREEN)	1					
11	5JJ–82151–10	.FUSE (15A-BL) .FUSIBLE (15A-BL)	2					
12	67F–8215B–00	.CAP (BLACK) .BOUCHON (NOIR)	1					
13	6DA–82582–00	.CAP 1 (FEMALE) .BOUCHON 1 (FEMME)	1					
14	6DA–82582–10	.CAP 1 (MALE) .BOUCHON 1 (MALE)	1					
15	90464–18004	CLAMP BRIDE	1					
16	60V–8259F–00	SWITCH ASSY COMMUTATEUR	1					
17	6CJ–82554–00	STAY, NEUTRAL SWITCH SUPPORT, CONT DE POINT-MORT	1					
18	61A–82588–01	PLATE PLAQUE	1					
19	90387–04001	COLLAR COLLERETTE	1					
20	97985–04116	SCREW, WITH WASHER VIS, AVEC RONDELLE	2					
21	6BG–42811–01	STAY SUPPORT	1					
22	90464–18205	CLAMP BRIDE	1					
23	90109–06M86	BOLT BOULON	1					
24	63P–42756–00	STAY, CLAMP SUPPORT, COLLIER	1					
25	90464–12183	CLAMP BRIDE	1					
26	90109–06M86	BOLT BOULON	1					
27	90464–15008	CLAMP BRIDE	2					

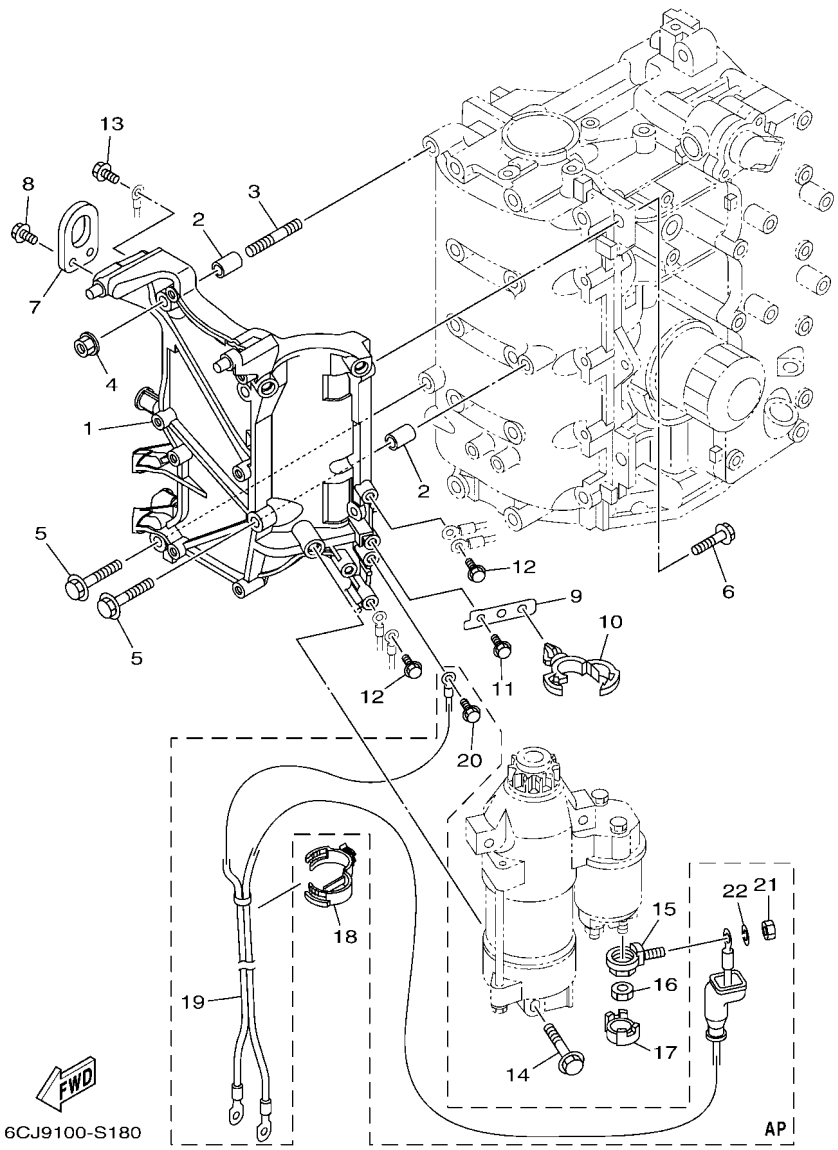

FIG. 18 ELECTRICAL 4 — PARTIE ELECTRIQUE 4

REF. NO.	PART NO. N° PIECES	DESCRIPTION DESCRIPTION	6CJA					REMARKS REMARQUES
1	6CJ–81822–00	BRACKET, STARTING MOTOR SUPPORT, DEMARREUR ELECTRIQUE	1					
2	99530–10114	PIN, DOWEL GOUJON, D'ASSEMBLAGE	2					
3	95680–08330	BOLT, STUD GOUJON	1					
4	90179–08M34	NUT ECROU	1					
5	97E95–08535	BOLT, HEXAGON W/W DEEP RECESS VIS HEXAGONAL AVC RONDELLE	2					
6	97E95–08525	BOLT, HEXAGON W/W DEEP RECESS VIS HEXAGONAL AVC RONDELLE	2					
7	62Y–11119–00	HANGER, ENGINE ANNEAU, LEVAGE	1					
8	97E95–06520	BOLT, HEXAGON W/W DEEP RECESS VIS HEXAGONAL AVC RONDELLE	2					
9	6CJ–85525–00	PLATE PLAQUE	1					
10	90464–20181	CLAMP BRIDE	1					
11	97E95–06516	BOLT, HEXAGON W/W DEEP RECESS VIS HEXAGONAL AVC RONDELLE	1					
12	97E95–06516	BOLT, HEXAGON W/W DEEP RECESS VIS HEXAGONAL AVC RONDELLE	2					
13	97E95–06516	BOLT, HEXAGON W/W DEEP RECESS VIS HEXAGONAL AVC RONDELLE	1					
14	97513–08545	BOLT, WITH WASHER VIS HEXAGONAL AVC RONDELLE	3					
15	60V–81925–00	TERMINAL BORNE	1					
16	90179–08003	NUT ECROU	1					
17	68F–82582–00	CAP,1 COUVERCLE 1	1					
18	90464–30003	CLAMP BRIDE	1					
19	6C5–82105–U1	BATTERY CABLE CABLE DE BATTERIE	1					AP AP
20	97E95–06516	BOLT, HEXAGON W/W DEEP RECESS VIS HEXAGONAL AVC RONDELLE	1					AP AP
21	95333–08600	NUT ECROU	1					AP AP
22	92903–08100	WASHER, SPRING RONDELLE, GROWER	1					AP AP

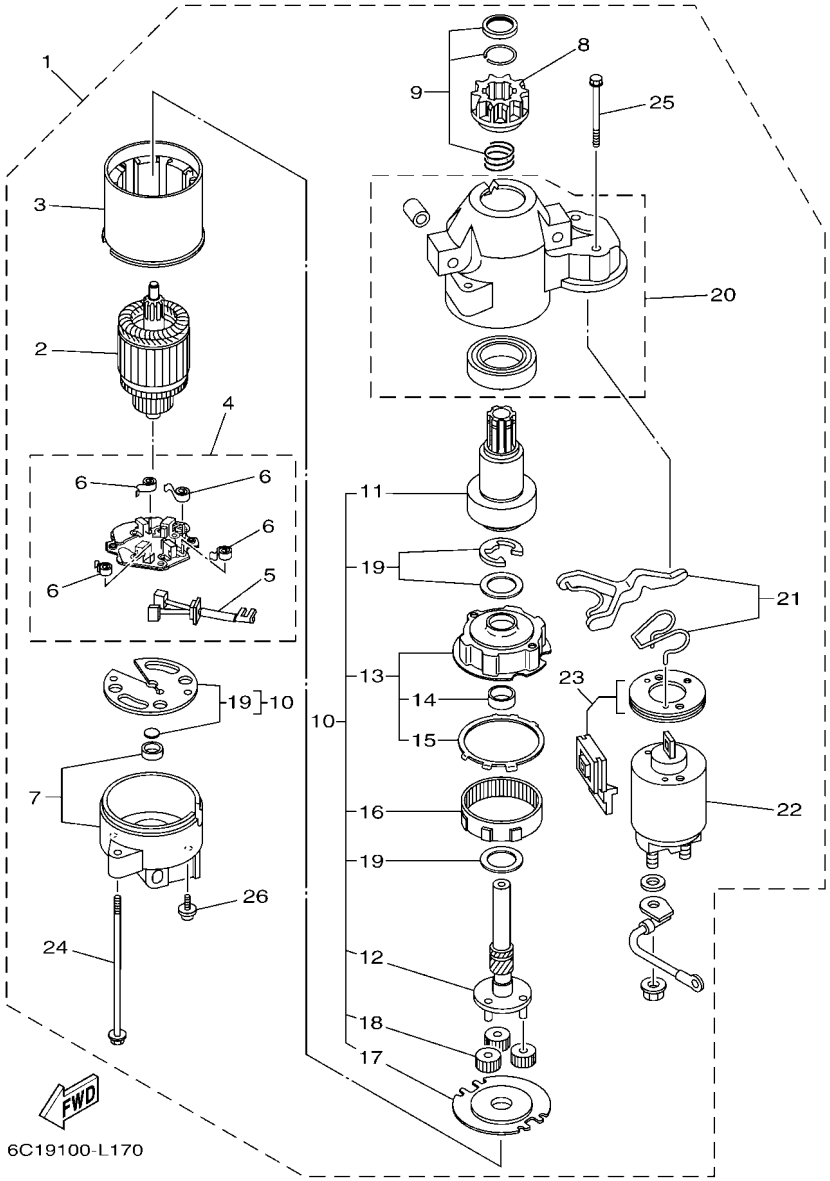

FIG. 19 STARTING MOTOR — DEMARREUR ELECTRIQUE

REF. NO.	PART NO. N° PIECES	DESCRIPTION DESCRIPTION	6CJA					REMARKS REMARQUES
1	6CJ–81800–01	STARTING MOTOR ASSY DEMARREUR ELECTRIQUE COMPLET	1					
2	67F–81850–00	.ARMATURE ASSY .INDUIT	1					
3	67F–81810–00	.STATOR ASSY .STATOR COMPLET	1					
4	69J–81840–11	.BRUSH HOLDER ASSY .SUPPORT DE CHARBON	1					
5	69J–81801–11	..BRUSH SET ..JEU DE BROSSE	1					
6	67F–81813–00	..SPRING, BRUSH ..RESSORT, DE CHARBON	4					
7	68F–81820–00	.REAR BRACKET ASSY .SUPPORT ARRIERE COMPLET	1					
8	67F–81808–00	.PINION ASSY .PIGNON	1					
9	67F–81857–00	.PINION STOPPER SET .BUTEE PIGNON	1					
10	67F–81807–00	.GEAR ASSY, STARTING MOTOR .PIGNON, DEMARREUR ELECTRIQUE	1					
11	67F–81832–00	..CLUTCH, OVER RUN ..EMBRAYAGE, ROUE LIBRE	1					
12	67F–81836–00	..SHAFT, PINION ..AXE, PIGNON	1					
13	67F–81821–00	..BRACKET, CENTER 1 ..SUPPORT, CENTRE 1	1					
14	67F–81841–00	...BEARING ...ROULEMENT	1					
15	67F–8183R–00	...GASKET ...JOINT	1					
16	67F–81891–00	..GEAR, RING ..ROUE DENTEE	1					WITH 67F-8183R-00 WITH 67F-8183R-00
17	67F–81830–00	..BRACKET, CENTER 2 ..SUPPORT, CENTRE 2	1					
18	60V–8183T–00	..GEAR, IDLER ..PIGNON, INTERMEDIAIRE	3					
19	67F–81809–00	..WASHER KIT ..JEU DE RONDELLES	1					
20	60X–81842–00	.COVER .COUVERCLE	1					
21	6C5–81839–00	.LEVER ASSY .LEVIER COMPLET	1					
22	6C5–81941–00	.STARTER RELAY ASSY .LANCEUR RELAIS (ENS.)	1					
23	6C5–81869–00	.COVER, DUST .COUVERCLE, POUSSIERE	1					
24	6K7–81826–11	.BOLT .BOULON	2					
25	69J–81828–00	.BOLT 2 .BOULON 2	2					
26	67F–81846–00	.SCREW .VIS	2					

FIG. 20 BOTTOM COWLING 1 — CAPOT INFERIEUR 1

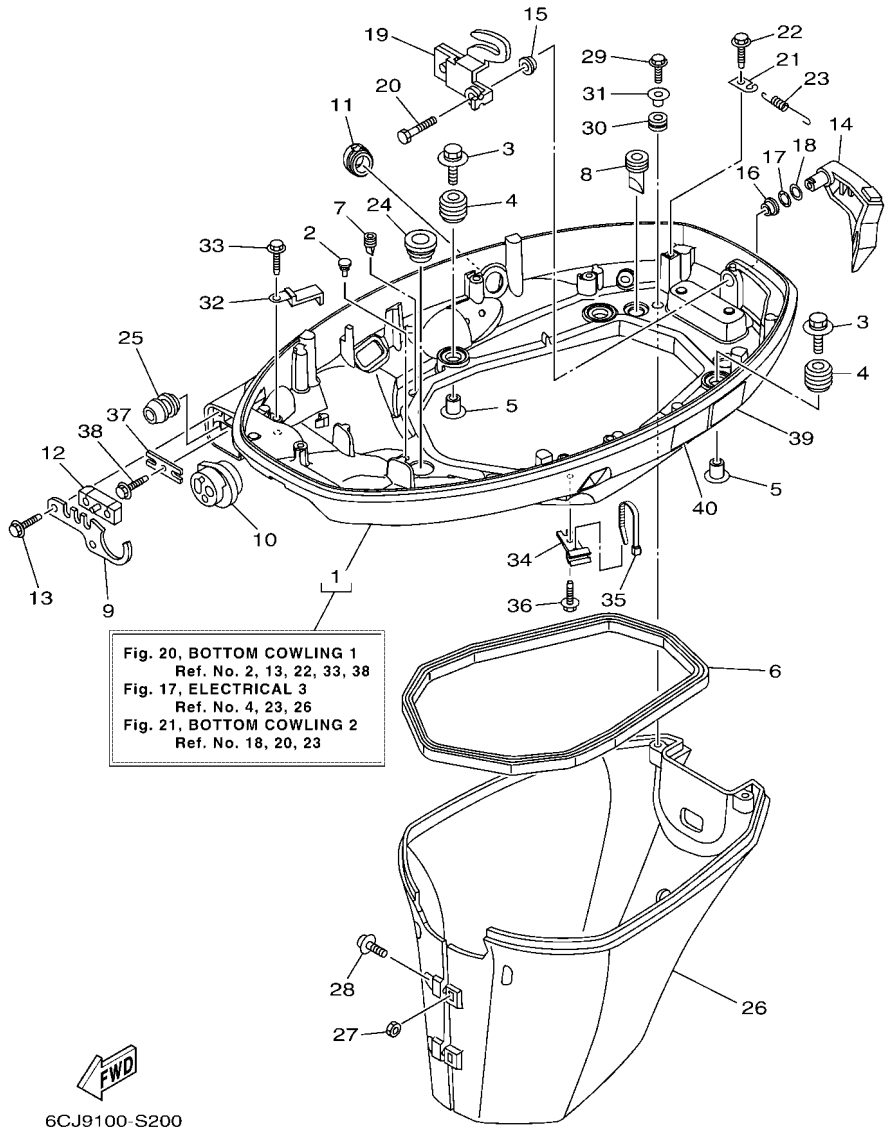

REF. NO.	PART NO. N° PIECES	DESCRIPTION DESCRIPTION	6CJA					REMARKS REMARQUES
1	6CJ–42710–01–8D	BOTTOM COWLING ASSY ENS. EMBASE	1					
2	6H4–42748–00	GROMMET PASSE-FIL	3					
3	90119–06M61	BOLT, WITH WASHER BOULON, AVEC RONDELLE	4					
4	6BG–42748–00	GROMMET PASSE-FIL	4					
5	90387–06M69	COLLAR COLLERETTE	4					
6	62Y–42716–00	RUBBER SEAL 1 JOINT EN CAOUTCHOUC 1	1					
7	65W–42717–00	RUBBER, SEAL 2 JOINT EN CAOUTCHOUC 2	2					
8	61A–42717–00	RUBBER, SEAL 2 JOINT EN CAOUTCHOUC 2	2					
9	6BG–42761–00	STOPPER PLAQUETTE	1					
10	6CJ–42725–00	GROMMET PASSE-FIL	1					
11	6CJ–42726–00	GROMMET PASSE-FIL	1					
12	6BG–42727–00	GROMMET PASSE-FIL	1					
13	90109–06M86	BOLT BOULON	2					
14	6BG–42815–00–8D	LEVER, CLAMP 1 LEVIER, PRESSE 1	1					
15	90386–12M37	BUSH DOUILLE	1					
16	90386–12MA2	BUSH DOUILLE	1					
17	90206–12052	WASHER, WAVE RONDELLE, ONDULEE	1					
18	90201–12M07	WASHER, PLATE RONDELLE, PLATE	1					
19	6BG–42816–00	LEVER, CLAMP 2 LEVIER, PRESSE 2	1					
20	97D95–06014	BOLT, HEXAGON DEEP RECESS VIS HEXAGONAL	1					
21	66T–43144–00	HOOK, SPRING CROCHET	1					
22	90109–06M86	BOLT BOULON	1					
23	90506–18023	SPRING, TENSION RESSORT, TENSION	1					
24	68U–42727–00	GROMMET PASSE-FIL	1					
25	6BG–24329–00	SEAL JOINT	1					
26	6BG–42741–10–8D	APRON CAPOT LATERAL	1					
27	95380–06600	NUT, HEXAGON ECROU	2					

FIG. 20 BOTTOM COWLING 1 — CAPOT INFERIEUR 1

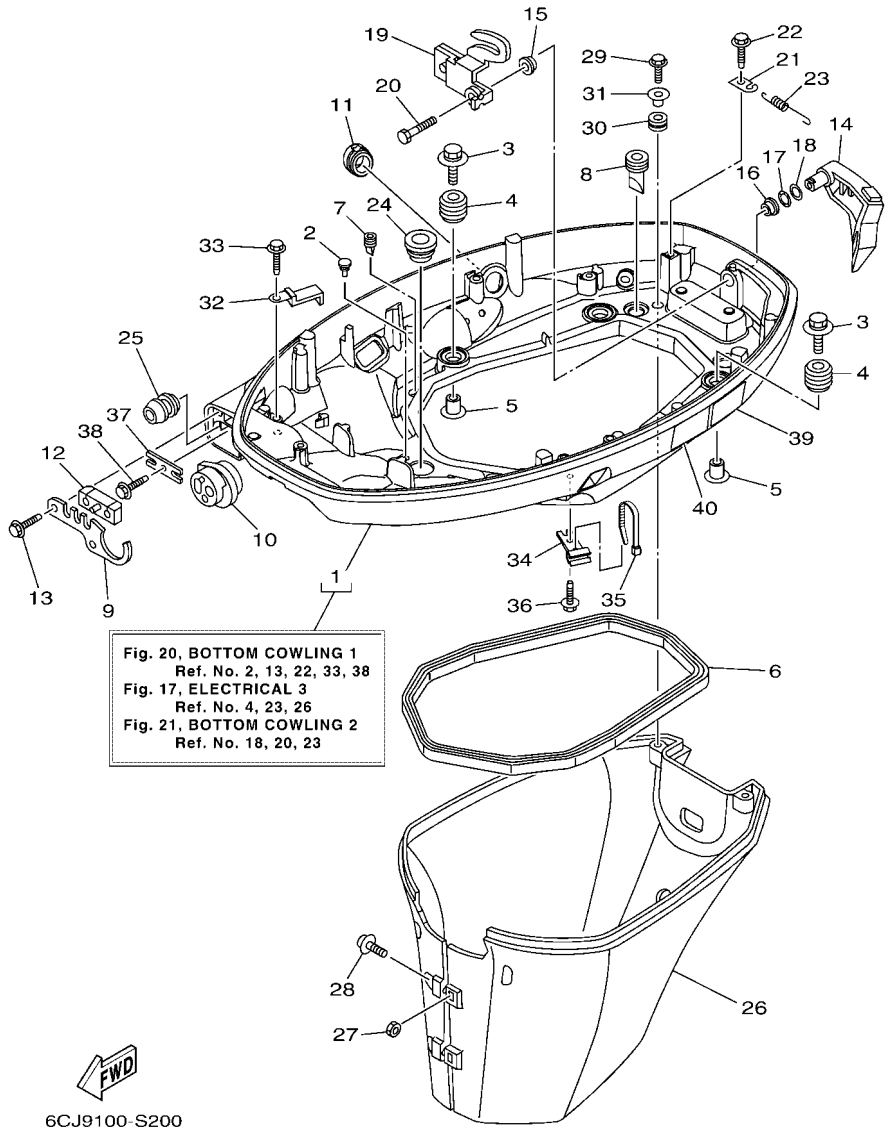

REF. NO.	PART NO. N° PIECES	DESCRIPTION DESCRIPTION	6CJA					REMARKS REMARQUES
28	97980–06325	SCREW, WITH WASHER VIS, AVEC RONDELLE	2					
29	90109–06M80	BOLT BOULON	2					
30	90480–13M24	GROMMET PASSE-FIL	2					
31	90387–06M43	COLLAR COLLERETTE	2					
32	90462–20005	CLAMP BRIDE	1					
33	90109–06M86	BOLT BOULON	1					
34	90464–09M49	CLAMP BRIDE	1					
35	90465–11M10	CLAMP BRIDE	1					
36	90109–06M86	BOLT BOULON	1					
37	6BG–48538–00	CLAMP, CABLE 1 COLLIER	1					
38	90109–06M86	BOLT BOULON	1					
39	6EE–42794–40	LABEL, WARNING (GENERAL) ETIQUETTE, AVERTISSEMENT	1					
40	6EE–42794–50	LABEL, WARNING (GENERAL) ETIQUETTE, AVERTISSEMENT	1					

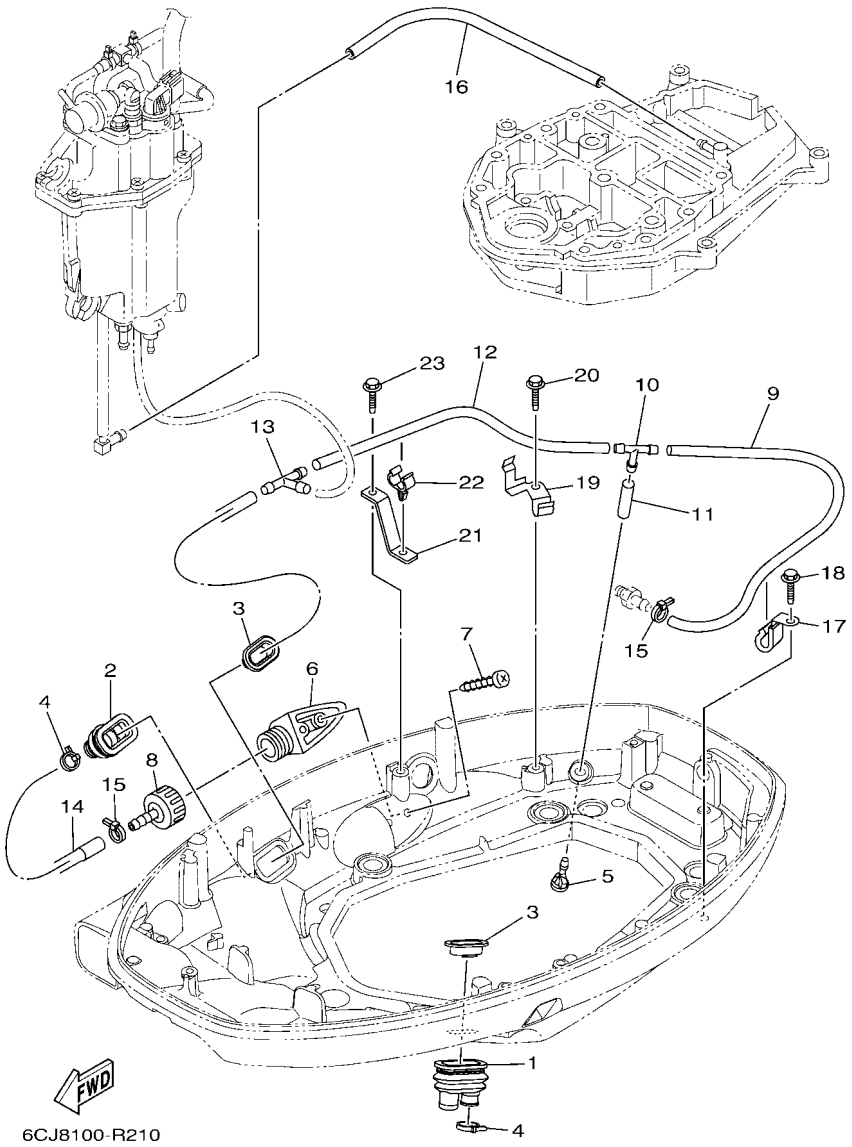

FIG. 21 BOTTOM COWLING 2 — CAPOT INFERIEUR 2

REF. NO.	PART NO. N° PIECES	DESCRIPTION DESCRIPTION	6CJA					REMARKS REMARQUES
1	6H1–42726–30	GROMMET PASSE-FIL	1					
2	6BG–42724–00	GROMMET PASSE-FIL	1					
3	6BG–42384–00	SEAL, CAP JOINT, CAPUCHON	2					
4	90465–11M10	CLAMP BRIDE	2					
5	6BL–44391–00	NIPPLE, HOSE RACCORD D'ESSENCE	1					
6	6AW–12572–00	ADAPTER ADAPTATEUR	1					
7	97780–60520	SCREW, TAPPING VIS, TETE BOMBEE	2					
8	6R3–12580–00	JOINT ASSY ARTICULER (ENS.)	1					
9	90445–09036	HOSE (L400) DURITE (L400)	1					
10	688–24378–00	PIPE, JOINT 3 DURITE RACCORDEMENT 3	1					
11	90445–09220	HOSE (L30) DURITE (L30)	1					
12	90445–096H2	HOSE (L280) DURITE (L280)	1					
13	688–24378–00	PIPE, JOINT 3 DURITE RACCORDEMENT 3	1					
14	6BG–12481–00	PIPE 1 DURITE 1	1					
15	90465–11M10	CLAMP BRIDE	2					
16	90445–09304	HOSE (L310) DURITE (L310)	1					
17	90462–08067	CLAMP BRIDE	1					
18	90109–06M86	BOLT BOULON	1					
19	6BG–24136–01	CLAMP 2 COLLIER 2	1					
20	90109–06M86	BOLT BOULON	1					
21	6CJ–24135–00	CLAMP 1 COLLIER 1	1					
22	90464–09130	CLAMP BRIDE	1					
23	90109–06M86	BOLT BOULON	1					

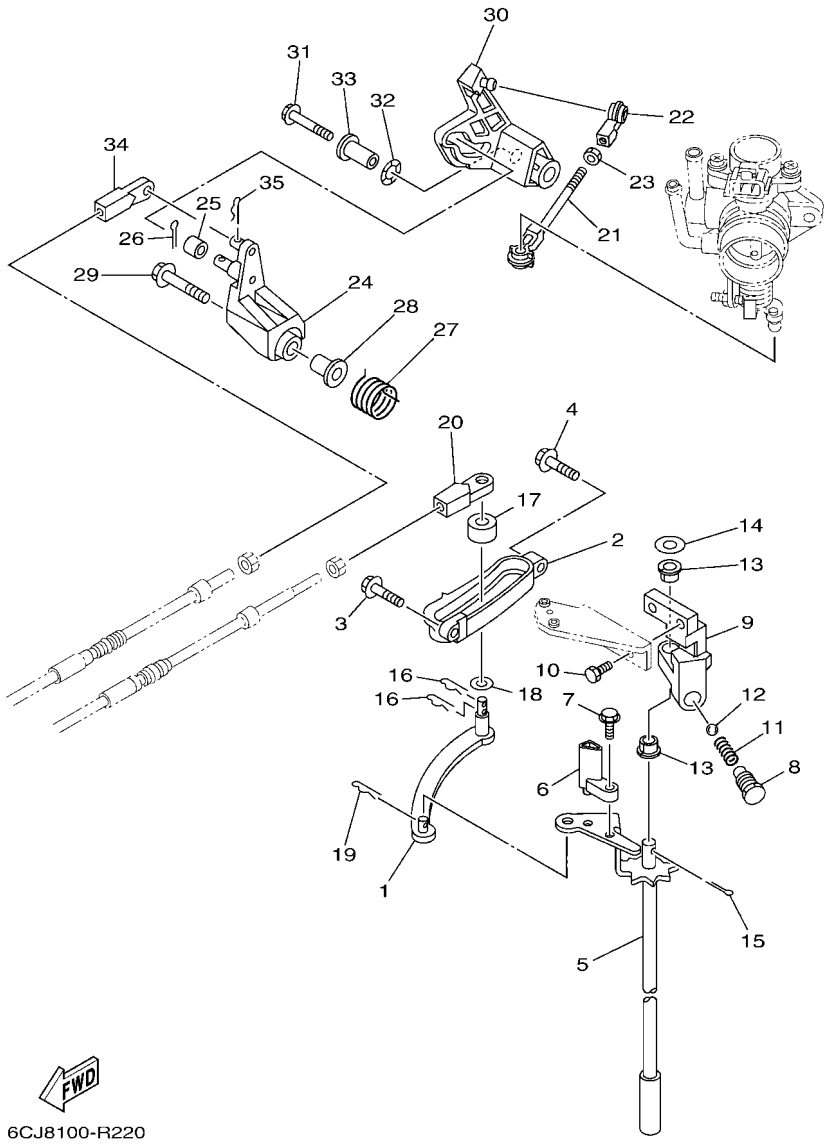

6CJ8100-R220

FIG. 22 CONTROL — COMMANDE

REF. NO.	PART NO. N° PIECES	DESCRIPTION DESCRIPTION	6CJA					REMARKS REMARQUES
1	69W–44121–00	LEVER, SHIFT ROD LEVIER, TIGE D'INVERSION	1					
2	62Y–44117–01	BRACKET SUPPORT	1					
3	97E95–06520	BOLT, HEXAGON W/W DEEP RECESS VIS HEXAGONAL AVC RONDELLE	1					
4	97E95–06525	BOLT, HEXAGON W/W DEEP RECESS VIS HEXAGONAL AVC RONDELLE	1					
5	6C5–44120–02	HANDLE GEAR SHIFT ASSY LEVIER D'EMBRAYAGE	1					L(21.0") L(21.0")
	6C5–44120–12	HANDLE GEAR SHIFT ASSY LEVIER D'EMBRAYAGE	1					X(25.5") X(25.5")
6	6C5–44122–00	BUSHING, SHIFT ROD LEVER DOUILLE, LEVIER D'EMBRAYAGE	1					
7	97595–05514	BOLT, WITH WASHER VIS HEXAGONAL AVC RONDELLE	1					
8	62Y–42715–01	BUSHING COUSSINET	1					
9	62Y–44118–00–94	BRACKET SUPPORT	1					
10	90101–06054	BOLT BOULON	2					
11	90501–12082	SPRING, COMPRESSION RESSORT, COMPRESSION	1					
12	93501–04M02	BALL BILLE	1					
13	90386–90M90	BUSH DOUILLE	2					
14	90201–10M20	WASHER, PLATE RONDELLE, PLATE	1					
15	91490–20015	PIN. COTTER GOUPILLE	1					
16	90468–18008	CLIP JONC	2					
17	688–44122–00	BUSHING, SHIFT ROD LEVER DOUILLE, LEVIER D'EMBRAYAGE	1					
18	90202–07M07	WASHER, PLATE RONDELLE, PLATE	1					
19	90468–18008	CLIP JONC	1					
20	69W–48344–00	CABLE END, REMOTE CONTROL CHAPE CABLE	1					
21	688–41211–01	LINK, ACCEL. BIELLETTE, ACCELERATION	1					
22	6H4–41237–00	JOINT, LINK RACCORD	1					
23	95380–05700	NUT ECROU	1					
24	62Y–42154–A0	LEVER, THROTTLE CONTROL LEVIER DE COMMANDE D'AVANCE	1					
25	6C5–42171–00	BUSHING COUSSINET	1					
26	91490–16010	PIN. COTTER GOUPILLE	1					

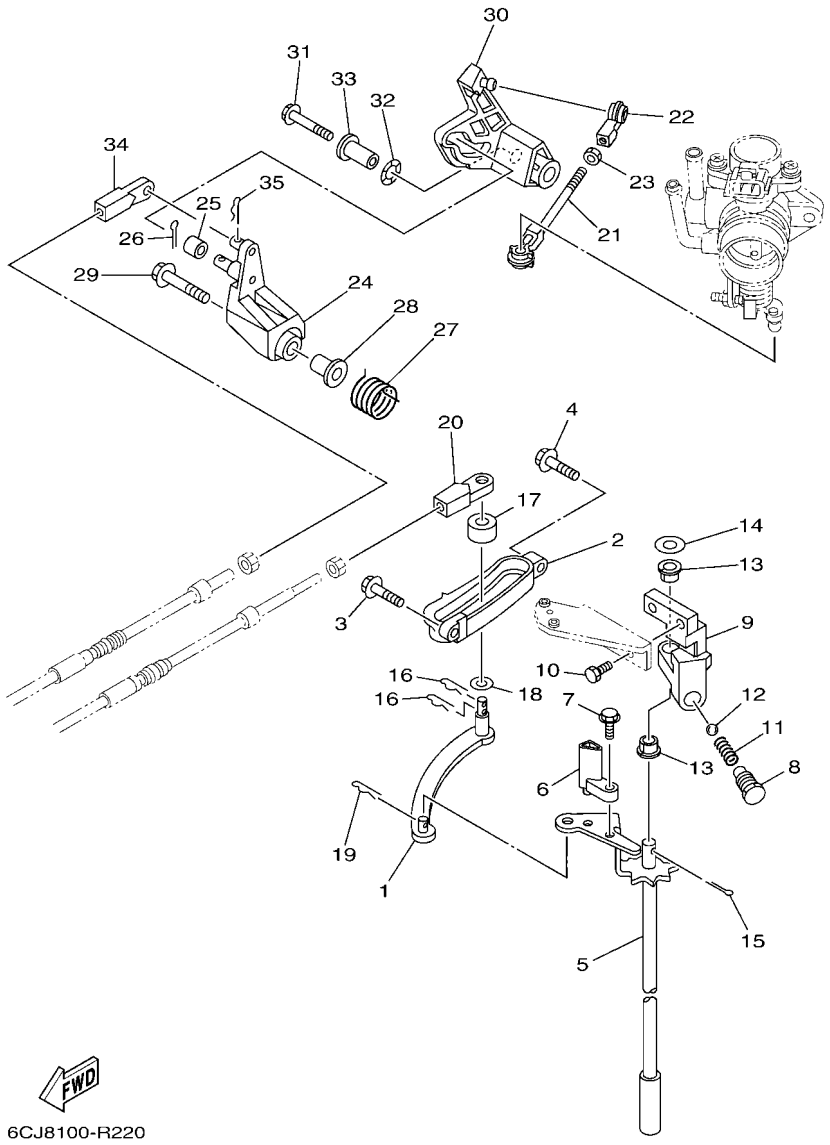

6CJ8100-R220

FIG. 22 CONTROL — COMMANDE

REF. NO.	PART NO. N° PIECES	DESCRIPTION DESCRIPTION	6CJA					REMARKS REMARQUES
27	62Y–44135–00	SPRING RESSORT	1					
28	90387–06M45	COLLAR COLLERETTE	1					
29	90119–06126	BOLT, WITH WASHER BOULON, AVEC RONDELLE	1					
30	6BG–42335–A0	LEVER, ACCEL. CONTROL LEVIER, ACCELERATION	1					
31	95D95–06045	BOLT, FLANGE DEEP RECESS BOULON FIXATION	1					
32	90206–10M04	WASHER, WAVE RONDELLE, ONDULEE	1					
33	90387–06279	COLLAR COLLERETTE	1					
34	69W–48344–00	CABLE END, REMOTE CONTROL CHAPE CABLE	1					
35	90468–18008	CLIP JONC	1					

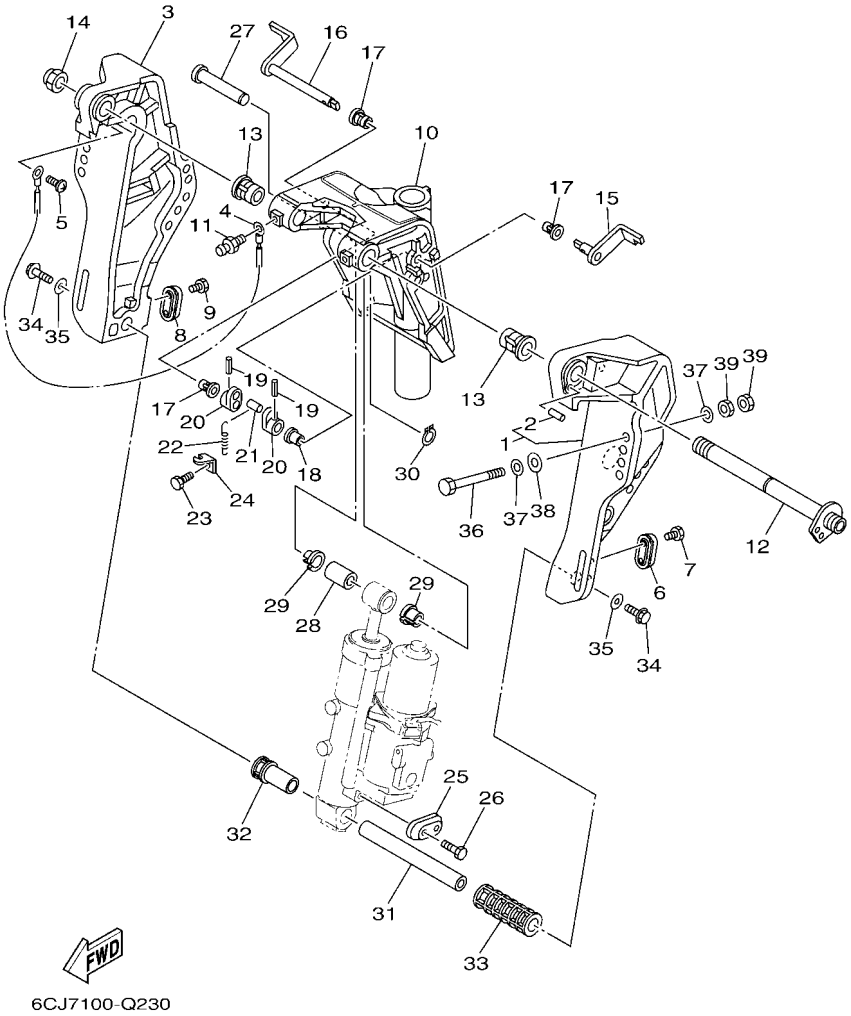

FIG. 23 BRACKET 1 — SUPPORT 1

REF. NO.	PART NO. N° PIECES	DESCRIPTION DESCRIPTION	6CJA					REMARKS REMARQUES
1	6C5–43111–10–8D	BRACKET, CLAMP 1 PRESSE 1	1					FOR TILT LIMIT FOR TILT LIMIT
2	93606–19002	.PIN, DOWEL .GOUPILLE	1					
3	6C5–43112–01–8D	BRACKET, CLAMP 2 PRESSE 2	1					
4	6E5–82148–00	WIRE, LEAD 4 FIL 4	1					
5	97885–06008	SCREW, PAN HEAD VIS, A ENCOCHE	1					
6	65W–45251–00	ANODE ANODE	1					
7	90101–06020	BOLT BOULON	2					
8	65W–45251–00	ANODE ANODE	1					
9	90101–06020	BOLT BOULON	2					
10	6C5–43311–01–8D	BRACKET, SWIVEL 1 SUPPORT, PIVOT 1	1					
11	93700–06002	NIPPLE, GREASE PION	3					
12	6C5–43131–00	BOLT, CLAMP BRACKET BOULON, PRESSE	1					FOR TILT LIMIT FOR TILT LIMIT
13	90386–22MA4	BUSH DOUILLE	2					
14	90185–22M11	NUT, SELF-LOCKING ECROU,AUTO-BLOQUANT	1					FOR TILT LIMIT FOR TILT LIMIT
15	6C5–43181–00	LEVER, TILT STOP 1 LEVIER VERROUILLAGE RELEVAGE 1	1					
16	6C5–43185–00	LEVER, TILT STOP 2 LEVIER VERROUILLAGE RELEVAGE 2	1					
17	90386–10M16	BUSH DOUILLE	3					
18	90386–10025	BUSH DOUILLE	1					
19	91690–30020	PIN, SPRING AGRAFFE	2					
20	6G5–43148–00	COLLAR, DISTANCE ENTRETOISE	2					
21	90249–06M19	PIN GOUPILLE	1					
22	90506–14M24	SPRING, TENSION RESSORT, TENSION	1					
23	97D95–06010	BOLT, HEXAGON DEEP RECESS VIS HEXAGONAL	1					
24	6G5–43144–00	HOOK, SPRING CROCHET	1					
25	65W–45251–00	ANODE ANODE	1					
26	90101–06020	BOLT BOULON	2					
27	6E5–43126–02	PIN, UPPER SHOCK MOUNT AXE, SUPERIEUR AMORTISSEUR	1					

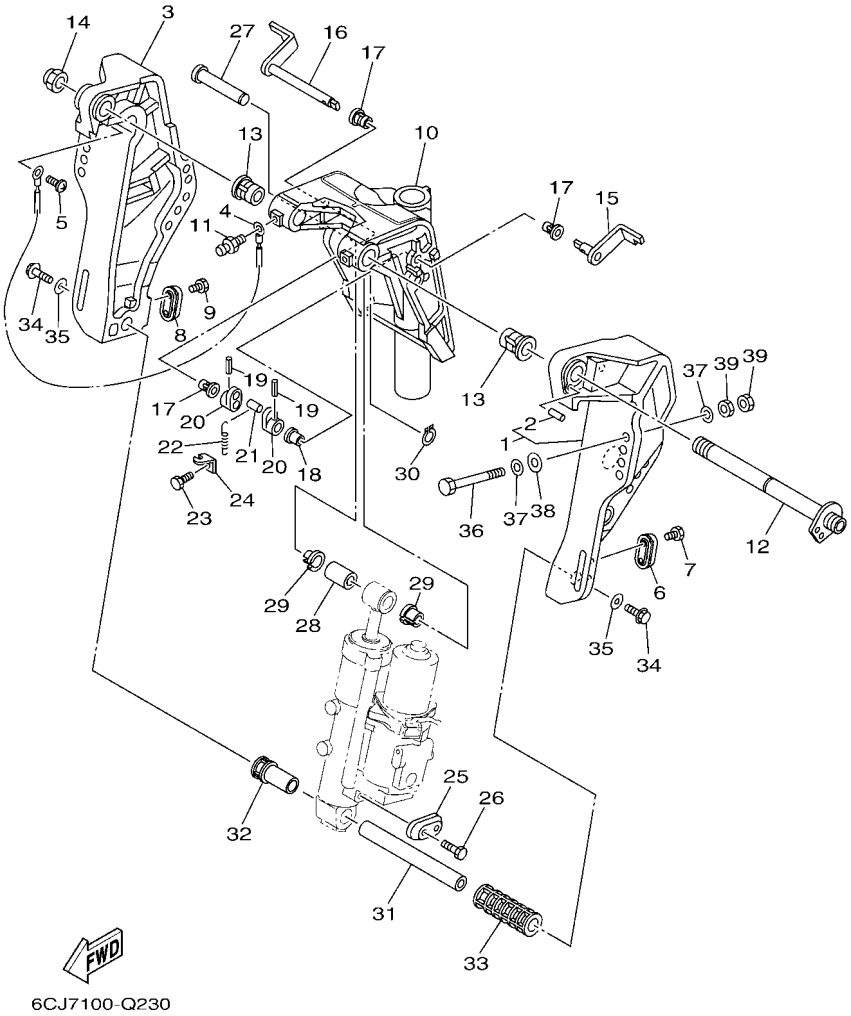

FIG. 23 BRACKET 1 — SUPPORT 1

REF. NO.	PART NO. N° PIECES	DESCRIPTION DESCRIPTION	6CJA					REMARKS REMARQUES
28	90386–18M92	BUSH DOUILLE	1					
29	90386–18M35	BUSH DOUILLE	2					
30	93410–18M05	CIRCLIP CIRCLIP	1					
31	6CJ–43818–00	PIN, LOWER SHOCK MOUNT AXE, INFERIEUR AMORTISSEUR	1					
32	6C5–43833–00	PIPE TUYAU	1					
33	6C5–43834–00	PIPE TUYAU	1					
34	90119–10054	BOLT, WITH WASHER BOULON, AVEC RONDELLE	2					
35	90201–10060	WASHER, PLATE RONDELLE, PLATE	2					
36	90101–12M65	BOLT BOULON	4					
37	90201–12062	WASHER, PLATE RONDELLE, PLATE	8					
38	90201–12426	WASHER, PLATE RONDELLE, PLATE	4					
39	95380–12600	NUT ECROU	8					

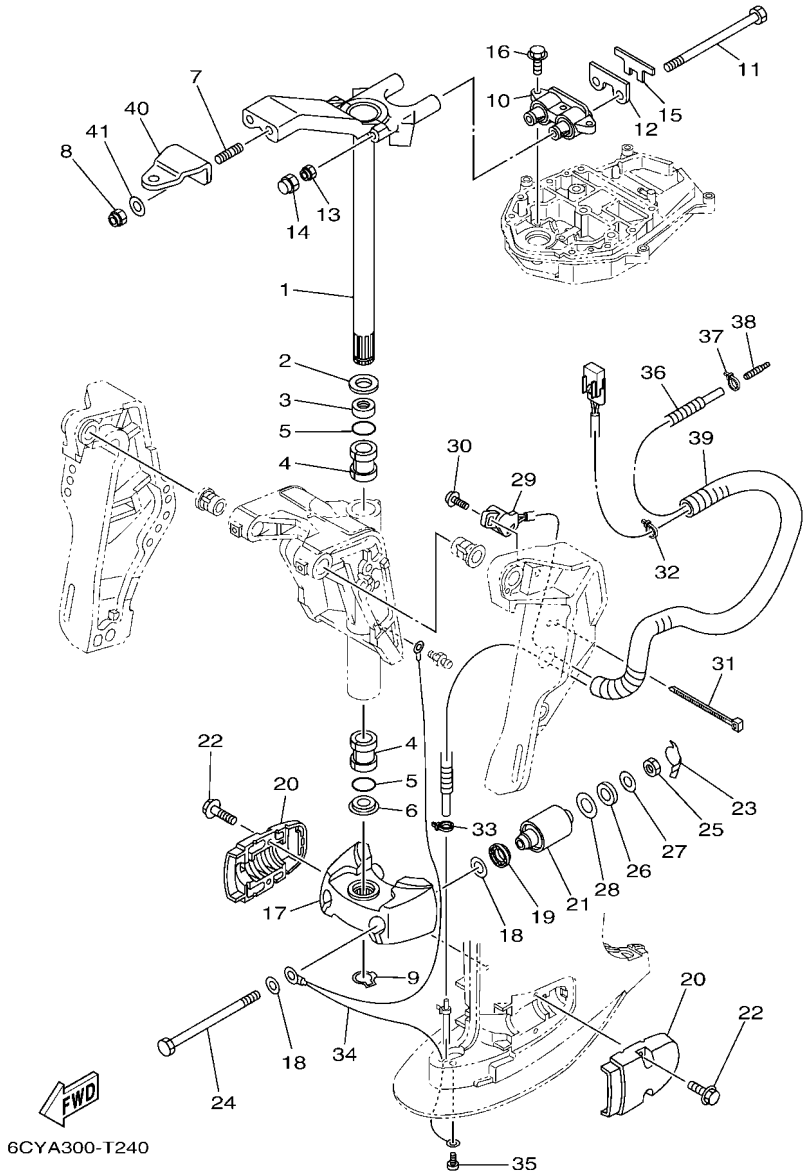

FIG. 24 BRACKET 2 — SUPPORT 2

REF. NO.	PART NO. N° PIECES	DESCRIPTION DESCRIPTION	6CJA					REMARKS REMARQUES
1	69W–42510–01–8D	STEERING BRACKET ASSY DIRECTION SUPPORT (ENS.)	1					
2	90201–30M00	WASHER, PLATE RONDELLE, PLATE	1					
3	90386–30M78	BUSH DOUILLE	1					
4	90386–30M77	BUSH DOUILLE	2					
5	93210–29M94	O-RING JOINT TORIQUE	2					
6	90386–30M60	BUSH DOUILLE	1					
7	90116–10063	BOLT, STUD GOUJON	2					
8	90185–10027	NUT, SELF-LOCKING ECROU,AUTO-BLOQUANT	2					
9	93410–28M06	CIRCLIP CIRCLIP	1					
10	6CJ–44514–00	MOUNT DAMPER, UPPER SIDE SILENT-BLOC, SUPERIEUR LATERAL	1					
11	90109–08229	BOLT BOULON	2					
12	6CJ–44526–00	PLATE PLAQUE	1					
13	90185–08018	NUT, SELF-LOCKING ECROU,AUTO-BLOQUANT	2					
14	6C5–44194–00	CAP CAPUCHON	2					
15	6CJ–44533–00	DAMPER, UPPER MOUNT RUBBER COUVERCLE, SUSPENSION INFERIEU	1					
16	97E75–08530	BOLT, HEXAGON W/W DEEP RECESS VIS HEXAGONAL AVC RONDELLE	3					
17	6C5–44551–00–8D	HOUSING, LOWER MOUNT RUBBER 1 BOITIER, SILENT-BLOC INFERIEUR	1					
18	90201–12M16	WASHER, PLATE RONDELLE, PLATE	4					
19	6C5–43885–00	GROMMET PASSE-FIL	2					
20	6C5–44552–00–8D	HOUSING, LOWER MOUNT RUBBER 2 BOITIER, SILENT-BLOC INFERIEUR	2					
21	69W–44555–00	MOUNT DAMPER, LOWER SIDE SILENT-BLOC, INFERIEUR LATERAL	2					
22	90119–08094	BOLT, WITH WASHER BOULON, AVEC RONDELLE	4					
23	6CJ–44575–00	DAMPER, LOWER MOUNT RUBBER SILENT-BLOC, INFERIEUR	2					
24	90109–12MA3	BOLT BOULON	2					
25	95380–12600	NUT ECROU	2					
26	90202–21100	WASHER, PLATE RONDELLE, PLATE	2					
27	90201–13M19	WASHER, PLATE RONDELLE, PLATE	2					

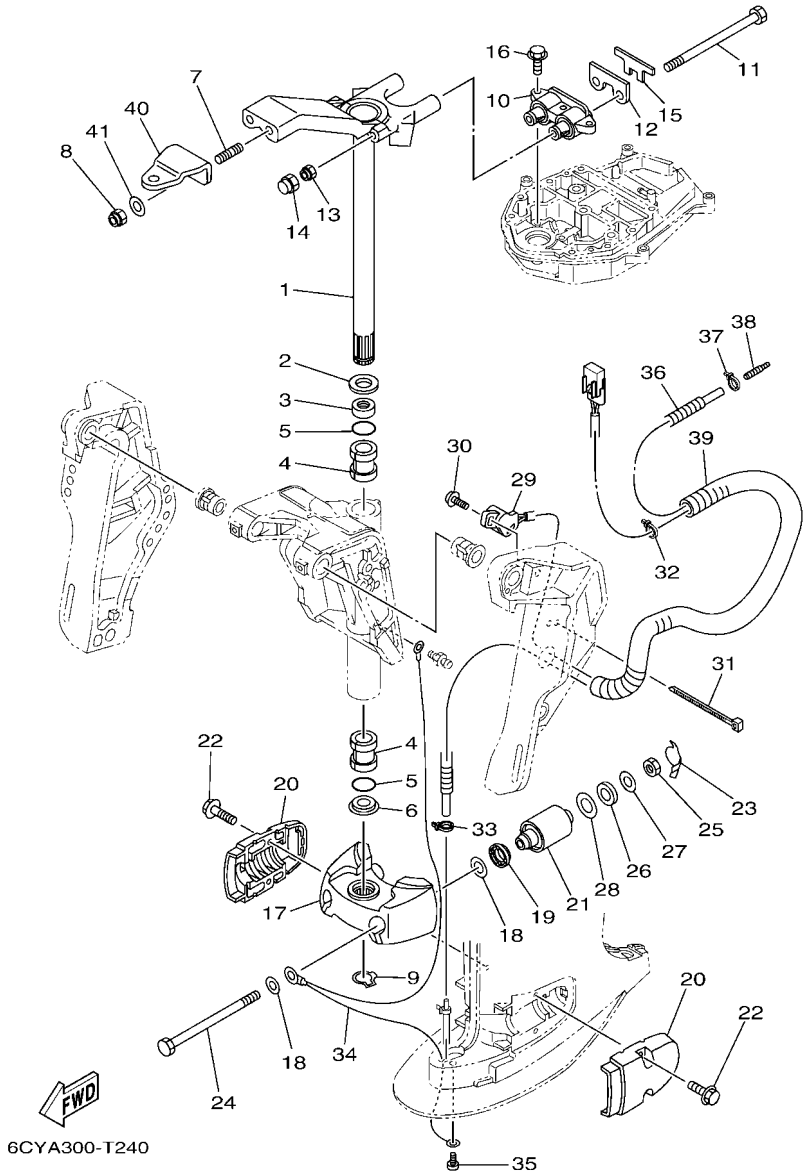

FIG. 24 BRACKET 2 — SUPPORT 2

REF. NO.	PART NO. N° PIECES	DESCRIPTION DESCRIPTION	6CJA					REMARKS REMARQUES
28	90201–22M05	WASHER, PLATE RONDELLE, PLATE	2					
29	63D–83672–11	TRIM SENDER INCLINER RACCORD	1					
30	97985–06216	SCREW, WITH WASHER VIS, AVEC RONDELLE	2					
31	90464–76001	CLAMP BRIDE	1					
32	90465–11M10	CLAMP BRIDE	1					
33	90465–11M10	CLAMP BRIDE	1					
34	67C–82127–10	WIRE, LEAD 2 FIL 2	1					
35	97885–06008	SCREW, PAN HEAD VIS, A ENCOCHE	1					
36	6CJ–44385–00	HOSE, WATER 1 TUBE D'EAU 1	1					
37	90465–11M10	CLAMP BRIDE	1					
38	6E5–83558–00	END, NIPPLE RACCORD DE NIPPLE	1					
39	90447–19009	TUBE DURITE	1					
40	65W–48511–01	HOOK, STEERING ATTACHE, DIRECTION	1					
41	90201–10049	WASHER, PLATE RONDELLE, PLATE	2					

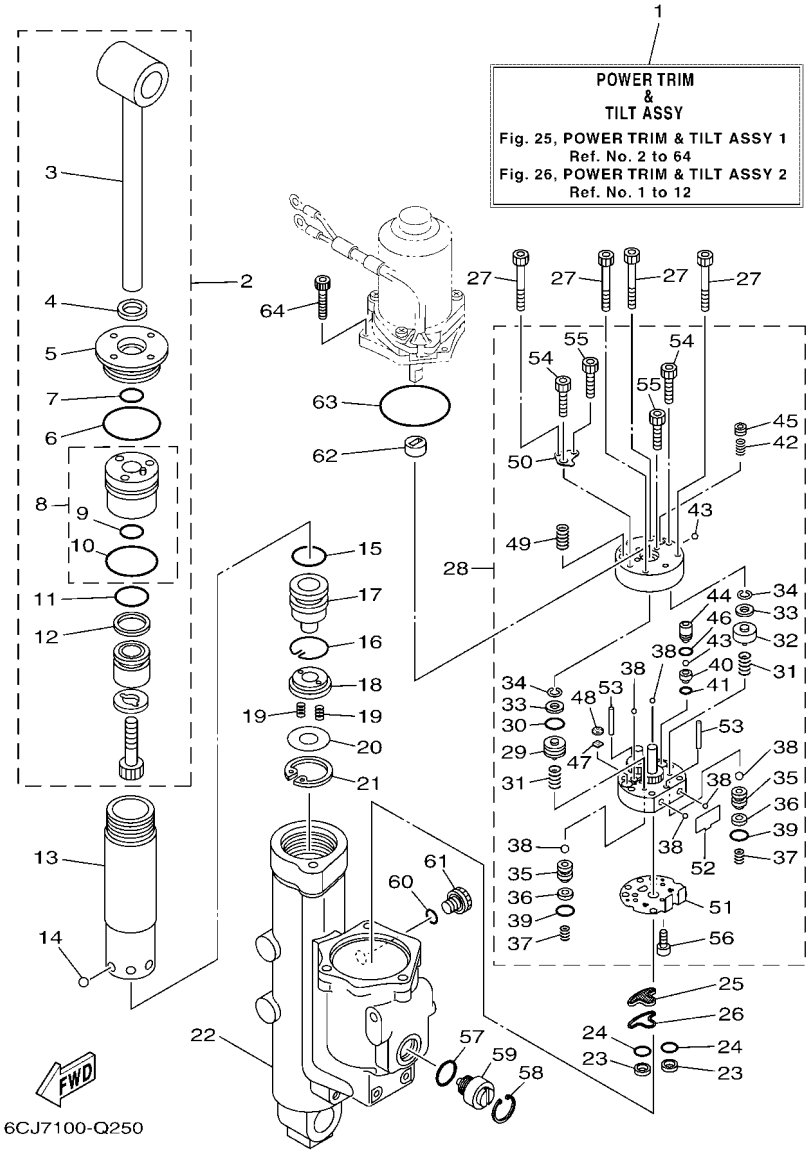

FIG. 25 POWER TRIM & TILT ASSY 1 — PUISSANCE PARER ET INCLINER 1

REF. NO.	PART NO. N° PIECES	DESCRIPTION DESCRIPTION	6CJA					REMARKS REMARQUES
1	6CJ–43800–12	POWER TRIM & TILT ASSY PUISSANCE PARER ET INCLINER (E	1					
2	6CJ–43810–10	TILT PISTON SUB ASSY INCLINER PISTON AUXILIAIRE(ENS	1					
3	6CJ–43801–10	.ROD .TIGE	1					
4	62Y–43822–00	.SEAL, TRIM DUST .JOINT	1					
5	6CJ–43821–10	.SCREW, TRIM CYLINDER END .VIS	1					
6	93210–49001	.O-RING .JOINT TORIQUE	1					
7	6CJ–43863–00	.O-RING .JOINT TORIQUE	1					
8	6CJ–4380R–10	.CYLINDER END SUB ASSY .CYLINDRE RACCORD (ENS.)	1					
9	6CJ–43863–00	..O-RING ..JOINT TORIQUE	1					
10	93210–44006	..O-RING ..JOINT TORIQUE	1					
11	6C5–43861–00	.O-RING .JOINT TORIQUE	1					
12	6C5–43871–00	.RING, BACK UP .SEGMENT	1					
13	6CJ–22471–10	CYLINDER, SHOCK ABSORBER CYLINDRE, AMORTISSEUR	1					
14	93503–16003	BALL BILLES	6					
15	6C5–43861–00	O-RING JOINT TORIQUE	1					
16	6C5–43875–00	RING, SNAP RESSORT	1					
17	6CJ–4381B–10	FREE PISTON SUB ASSY PISTON AUXILIAIRE (ENS.)	1					
18	6C5–43899–00	PLATE STOPPER PLAQUETTE	1					
19	62X–4384H–00	SPRING RESSORT	2					
20	6C5–22435–00	PLATE, VALVE 2 PLAQUE, CLAPET 2	1					
21	99009–32500	CIRCLIP CIRCLIP	1					
22	6CJ–4380K–11	CYLINDER, TILT SUB ASSY CYLINDRE	1					
23	6C5–43817–10	FILTER 2 FILTRE 2	2					
24	69J–4389J–00	O-RING JOINT TORIQUE	2					
25	6C5–43816–00	FILTER 1 FILTRE 1	1					
26	6C5–4380G–00	PLATE PLAQUE	1					
27	91318–05045	BOLT BOULON	4					

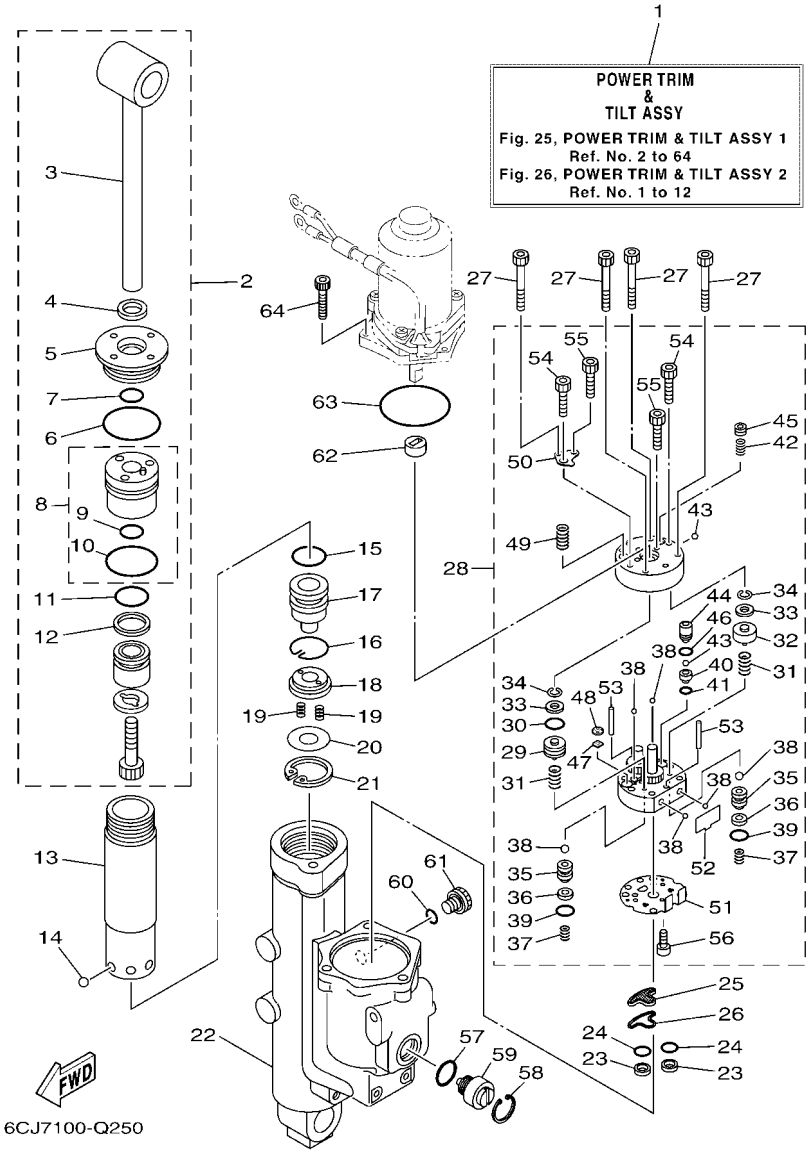

FIG. 25 POWER TRIM & TILT ASSY 1 — PUISSANCE PARER ET INCLINER 1

REF. NO.	PART NO. N° PIECES	DESCRIPTION DESCRIPTION	6CJA					REMARKS REMARQUES
28	6CJ–43830–10	GEAR PUMP ASSY POMPE A PIGNON (ENS.)	1					
29	6D8–43841–00	.PISTON, SHUTTLE .PISTON	1					
30	6H1–43883–00	.O-RING .JOINT TORIQUE	1					
31	69J–43894–00	.SPRING, SHUTTLE RETURN .RESSORT	2					
32	6D8–4384M–00	.PISTON, SHUTTLE 2 .PISTON 2	1					
33	69A–4384F–00	.SEAL, MAIN VALVE .JOINT	2					
34	99002–03600	.CIRCLIP .CIRCLIP	2					
35	6EK–4382E–00	.ADAPTOR 2 .ADAPTEUR 2	2					
36	6C6–4387G–00	.WASHER .RONDELLE	2					
37	6C6–43853–00	.SPRING, MAIN VALVE .RESSORT	2					
38	93505–32038	.BALL .BILLE	6					
39	69J–4389J–00	.O-RING .JOINT TORIQUE	2					
40	6D8–43851–00	.SEAT, RELIEF VALVE .SIEGE	1					
41	93210–064A5	.O-RING .JOINT TORIQUE	1					
42	6C5–43855–10	.SPRING, UP RELIEF .RESSORT	1					
43	93501–08001	.BALL .BILLE	2					
44	6D8–43844–00	.PIN, VALVE SUPPORT .GOUPILLE	1					
45	6D8–43843–00	.SCREW, VALVE LOCK .VIS	1					
46	93210–04N51	.O-RING .JOINT TORIQUE	1					
47	6H1–4384G–11	.SEAL, RELIEF VALVE .JOINT	1					
48	6H1–43844–10	.PIN, VALVE SUPPORT .GOUPILLE	1					
49	6C5–43856–10	.SPRING, DOWN RELIEF .RESSORT	1					
50	6D8–4382L–00	.CAP, RELIEF VALVE .CAPUCHON	1					
51	6C5–43895–00	.SEAT, RELIEF VALVE .SIEGE	1					
52	6C5–43854–00	.SPRING, MANUAL RELEASE .RESSORT	1					
53	93604–26256	.PIN, DOWEL .CLAVETTE	2					
54	91318–05030	.BOLT .BOULON	2					

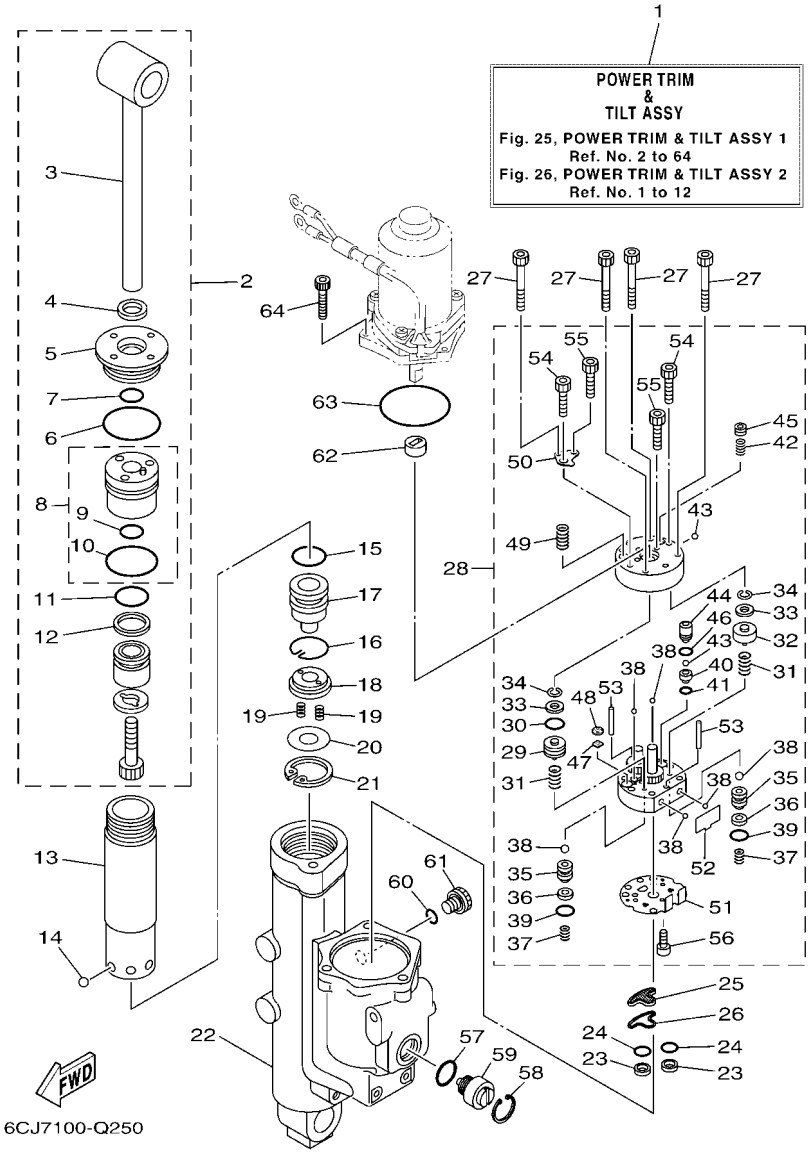

FIG. 25 POWER TRIM & TILT ASSY 1 — PUISSANCE PARER ET INCLINER 1

REF. NO.	PART NO. N° PIECES	DESCRIPTION DESCRIPTION	6CJA					REMARKS REMARQUES
55	91318–03025	.BOLT .BOULON	2					
56	91318–03005	.BOLT .BOULON	1					
57	6D8–43863–00	O-RING JOINT TORIQUE	1					
58	6H1–43875–00	RING, SNAP RESSORT	1					
59	6CJ–43845–10	SCREW, MANUAL RELEASE VIS	1					
60	93210–09165	O-RING JOINT TORIQUE	1					
61	6CJ–43829–10	PLUG, RESERVOIR BOUCHON	1					
62	6C5–43831–00	CONNECTOR, SHAFT RACCORD	1					
63	93210–64488	O-RING JOINT TORIQUE	1					
64	91380–05020	BOLT BOULON	3					

FIG. 26 POWER TRIM & TILT ASSY 2 — PUISSANCE PARER ET INCLINER 2

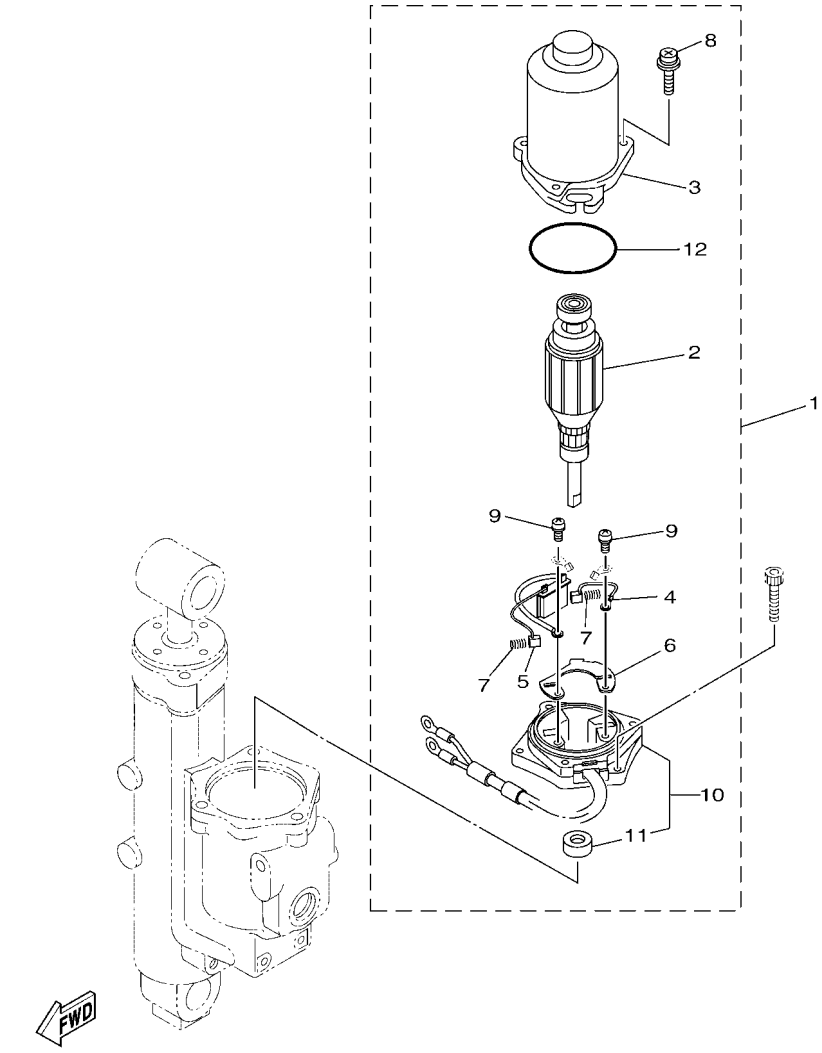

REF. NO.	PART NO. N° PIECES	DESCRIPTION DESCRIPTION	6CJA					REMARKS REMARQUES
1	6CJ–43880–12	MOTOR ASSY MOTEUR (ENS.)	1					
2	6CJ–43805–11	.ARMATURE ASSY .INDUIT (ENS.)	1					
3	6CJ–43804–11	.STATOR ASSY .STATOR (ENS.)	1					
4	6EK–43892–00	.BRUSH 2 .BALAI 2	1					
5	6CJ–82181–10	.CIRCUIT BREAKER COMP. .RUPTEUR COMPLET	1					
6	6EK–4380F–00	.PLATE, BRUSH HOLDER .PLAQUE	1					
7	62X–4386K–00	.SPRING, BRUSH .RESSORT, BALAI	2					
8	6CJ–43879–10	.SCREW, WITH WASHER .VIS, AVEC RONDELLE	3					
9	97602–04316	.SCREW, PAN HEAD WITH WASHER .VIS, AVEC RONDELLE	2					
10	6CJ–43881–10	.FRAME, END .BATI	1					
11	6EK–43882–00	..OIL SEAL ..JOINT SPI	1					
12	6CJ–43862–10	.O-RING .JOINT TORIQUE	1					

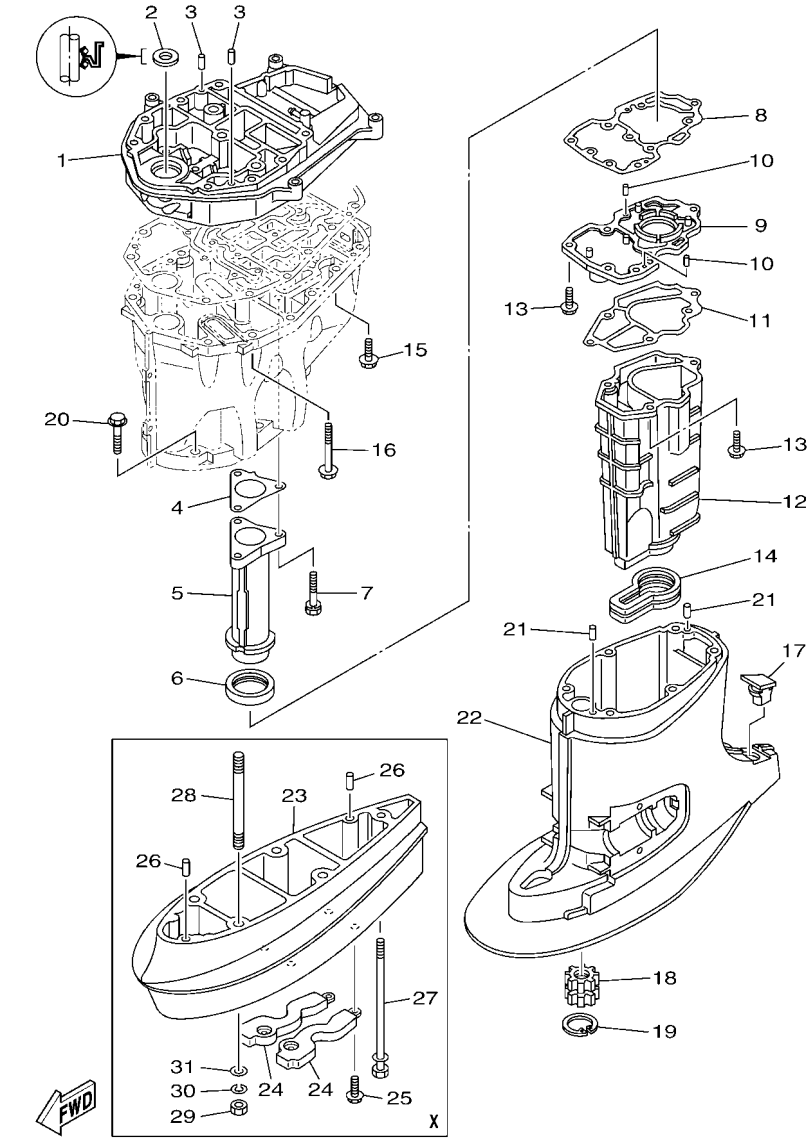

6CJ5700-N280

FIG. 27 UPPER CASING FOURREAU

REF. NO.	PART NO. N° PIECES	DESCRIPTION DESCRIPTION	6CJA					REMARKS REMARQUES
1	6C5–41137–03	GUIDE, EXHAUST COLLECTEUR D'ECHAPPEMENT	1					
2	93103–18011	OIL SEAL JOINT SPY	1					
3	93608–12M05	PIN, DOWEL AXE	2					
4	6C5–41133–00	GASKET, EXHAUST MANIFOLD 1 JOINT, PIPE D'ECHAPPEMENT	1					
5	6C5–41131–00–CA	MANIFOLD, EXT. 1 PIPE D'ECHAPPEMENT	1					
6	6C5–46132–00	GASKET 1 JOINT 1	1					
7	90119–06261	BOLT, WITH WASHER BOULON, AVEC RONDELLE	3					
8	6C5–41134–00	GASKET, EXHAUST MANIFOLD JOINT, PIPE D'ECHAPPEMENT	1					
9	6CJ–45181–01	PLATE PLAQUETTE	1					
10	93604–10M03	PIN, DOWEL CLAVETTE	2					
11	6C5–41135–00	GASKET, EXHAUST MANIFOLD JOINT, PIPE D'ECHAPPEMENT	1					
12	6CJ–14711–01	MUFFLER 1 POT D'ECHAPPEMENT 1	1					
13	97E75–06525	BOLT, HEXAGON W/W DEEP RECESS VIS HEXAGONAL AVC RONDELLE	6					
14	6C5–45123–00	GASKET, MUFFLER JOINT, POT DE DETENTE	1					
15	90119–08102	BOLT, WITH WASHER BOULON, AVEC RONDELLE	4					
16	90119–08132	BOLT, WITH WASHER BOULON, AVEC RONDELLE	8					
17	6C5–45155–00	CAP CAPUCHON	1					
18	69W–45318–00	BUSHING, DRIVE SHAFT DOUILLE, ARBRE MOTEUR	1					
19	93420–36M01	CIRCLIP CIRCLIP, TYPE S	1					
20	97E75–10545	BOLT, HEXAGON W/W DEEP RECESS VIS HEXAGONAL AVC RONDELLE	6					
21	93606–12019	PIN, DOWEL GOUPILLE	2					
22	6C5–45111–00–8D	CASING, UPPER FOURREAU	1					
23	6C5–45211–00–8D	EXTENSION EXTENSION	1					X(25.5") X(25.5")
24	6C5–45213–01	COVER, EXTENSION COUVERCLE EXTENSION	2					X(25.5") X(25.5")
25	97E75–06520	BOLT, HEXAGON W/W DEEP RECESS VIS HEXAGONAL AVC RONDELLE	4					X(25.5") X(25.5")
26	93606–12019	PIN, DOWEL GOUPILLE	2					X(25.5") X(25.5")
27	90119–08M00	BOLT, WITH WASHER BOULON, AVEC RONDELLE	1					X(25.5") X(25.5")

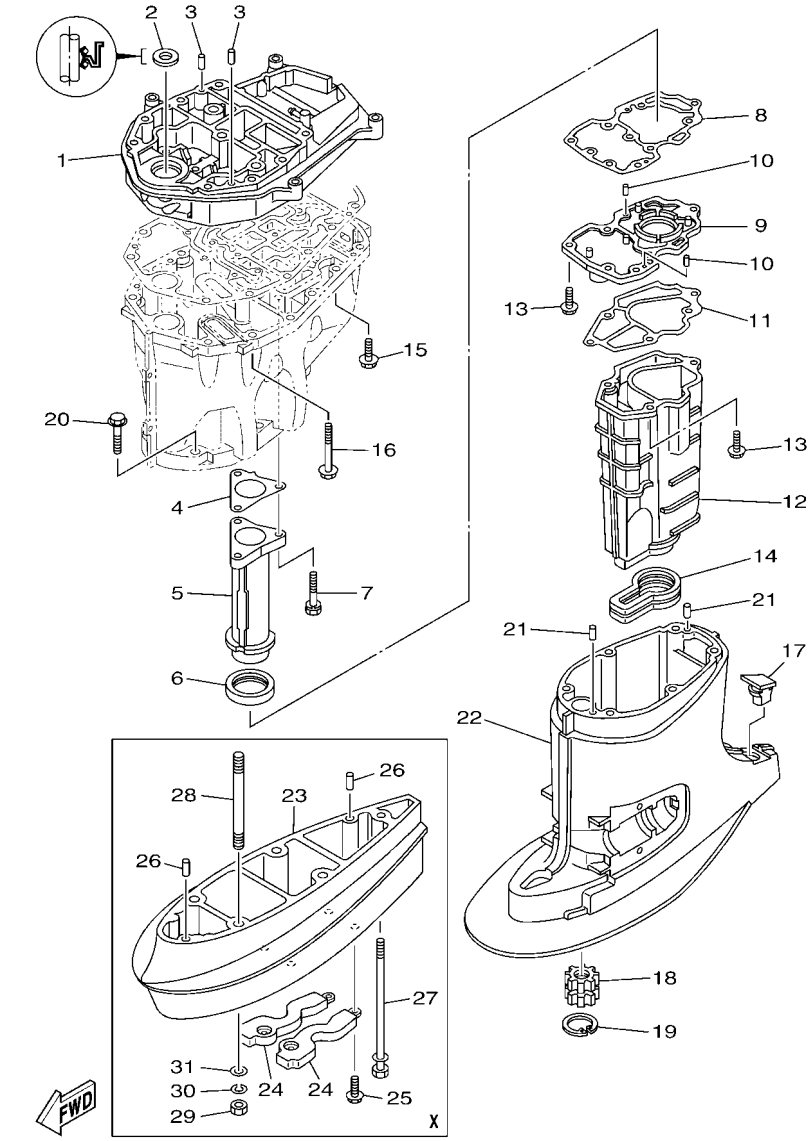

6CJ5700-N280

FIG. 27 UPPER CASING — FOURREAU

REF. NO.	PART NO. N° PIECES	DESCRIPTION DESCRIPTION	6CJA					REMARKS REMARQUES
28	90116–10M53	BOLT, STUD GOUJON	4					X(25.5") X(25.5")
29	95380–10600	NUT ECROU	4					X(25.5") X(25.5")
30	92990–10100	WASHER, SPRING RONDELLE, GROWER	4					X(25.5") X(25.5")
31	92995–10600	WASHER RONDELLE	4					X(25.5") X(25.5")

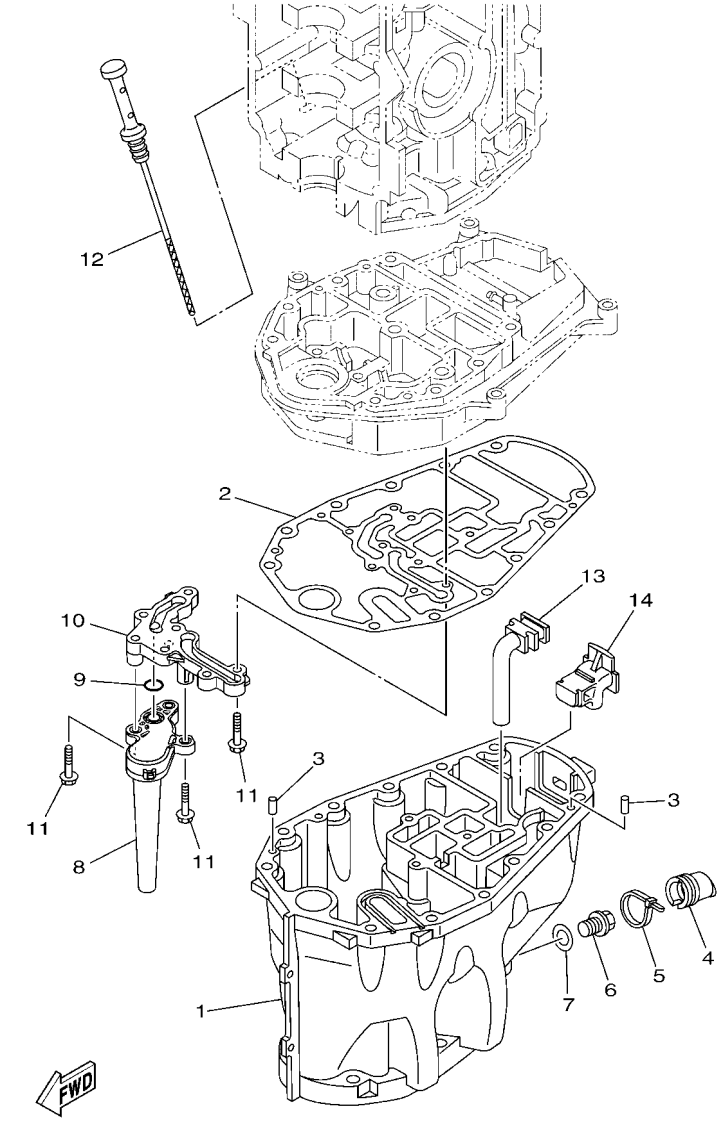

FIG. 28 OIL PAN — VENTILATEUR D'HUILE

REF. NO.	PART NO. N° PIECES	DESCRIPTION DESCRIPTION	6CJA					REMARKS REMARQUES
1	6C5–15311–02	OIL PAN VENTILATEUR D'HUILE	1					
2	6C5–15312–01	GASKET, OIL PAN JOINT DE VENTILATEUR D'HUILE	1					
3	93606–12019	PIN, DOWEL GOUPILLE	2					
4	6CJ–15316–00	DAMPER 1 AMORTISSEUR 1	1					
5	90465–11M59	CLAMP BRIDE	1					
6	90340–14M06	PLUG, STRAIGHT SCREW PLOT, FILETE DROIT	1					
7	90430–14M09	GASKET JOINT	1					
8	6CJ–13411–10	STRAINER, OIL FILTRE, HUILE	1					
9	93210–12790	O-RING JOINT TORIQUE	1					
10	6CJ–15333–10	COVER COUVERCLE	1					
11	95812–06025	BOLT, FLANGE BOULON	9					
12	6C5–15362–00	PLUG, OIL LEVEL PLOT, NIVEAU D'HUILE	1					
13	6C5–45135–10	PIPE TUYAU	1					
14	6C5–45136–10	PIPE DURITE	1					

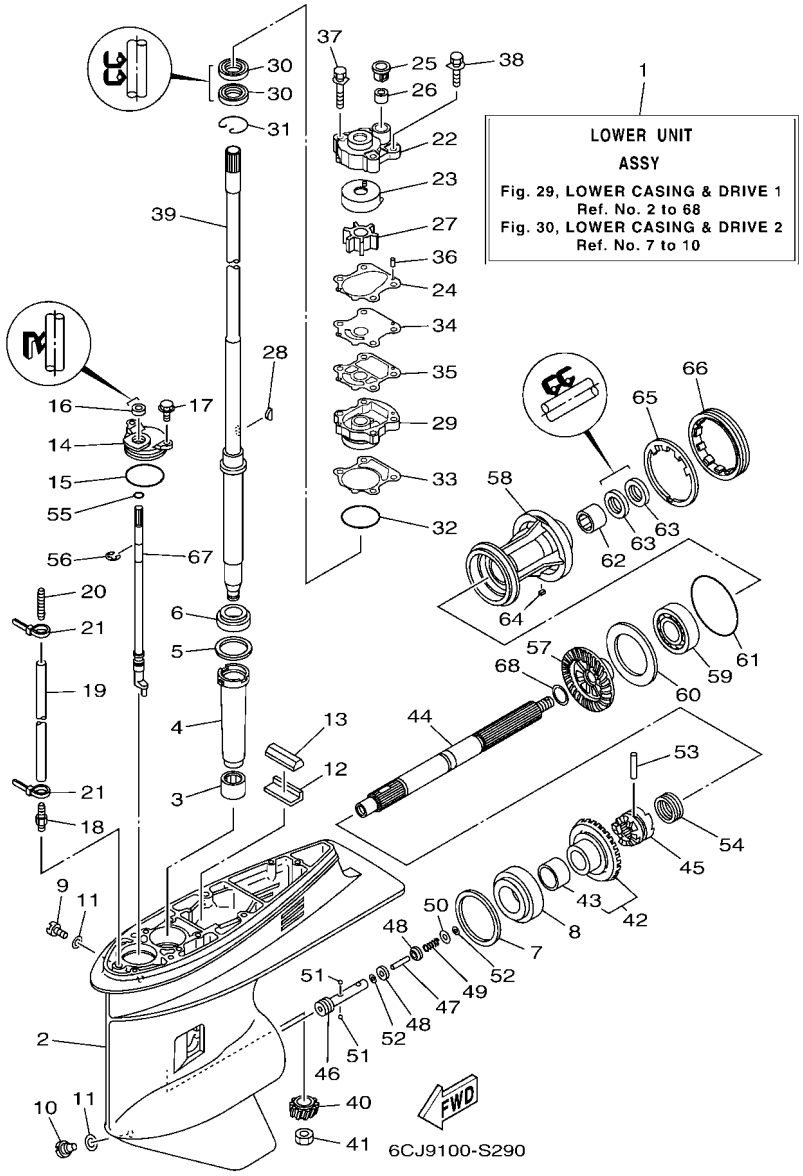

FIG. 29 LOWER CASING & DRIVE 1 — BOITIER D'HELICE TRANSMISSION1

REF. NO.	PART NO. N° PIECES	DESCRIPTION DESCRIPTION	6CJA					REMARKS REMARQUES
1	6CJ–45300–31–8D	LOWER UNIT ASSY UNITE INFERIEURE (ENS.)	1					L(21.0") L(21.0")
	6CJ–45300–41–8D	LOWER UNIT ASSY UNITE INFERIEURE (ENS.)	1					X(25.5") X(25.5")
2	67F–45301–00–8D	CASING, LOWER BEQUILLE	1					
3	93315–52563	BEARING ROULEMENT	1					
4	688–45536–01	SLEEVE, DRIVE SHAFT MANCHON, ARBRE MOTEUR	1					
5	688–45587–01	SHIM (T:0.10MM) CALE (T:0.10MM)	1					UR UR
	688–45587–10	SHIM (T:0.12MM) CALE (T:0.12MM)	1					UR UR
	688–45587–20	SHIM (T:0.15MM) CALE (T:0.15MM)	1					UR UR
	688–45587–30	SHIM (T:0.18MM) CALE (T:0.18MM)	1					UR UR
	688–45587–40	SHIM (T:0.30MM) CALE (T:0.30MM)	1					UR UR
	688–45587–50	SHIM (T:0.40MM) CALE (T:0.40MM)	1					UR UR
	688–45587–60	SHIM (T:0.50MM) CALE (T:0.50MM)	1					UR UR
6	93332–000U3	BEARING ROULEMENT	1					
7	688–45567–01	SHIM (T:0.10MM) CALE (T:0.10MM)	1					UR UR
	688–45567–10	SHIM (T:0.12MM) CALE (T:0.12MM)	1					UR UR
	688–45567–20	SHIM (T:0.15MM) CALE (T:0.15MM)	1					UR UR
	688–45567–30	SHIM (T:0.18MM) CALE (T:0.18MM)	1					UR UR
	688–45567–40	SHIM (T:0.30MM) CALE (T:0.30MM)	1					UR UR
	688–45567–50	SHIM (T:0.40MM) CALE (T:0.40MM)	1					UR UR
	688–45567–60	SHIM (T:0.50MM) CALE (T:0.50MM)	1					UR UR
8	93332–00095	BEARING ROULEMENT	1					
9	90340–08002	PLUG, STRAIGHT SCREW PLOT, FILETE DROIT	1					
10	688–45341–10	PLUG, DRAIN BOUCHON DE VIDANGE	1					
11	90430–08003	GASKET JOINT	2					
12	663–45376–00	GUIDE, SEAL DAMPER BUTEE, JOINT CAOUTCHOUC	1					
13	688–45375–00	DAMPER, SEAL BOURRELET, CAOUTCHOUC	1					
14	688–45321–00	PLATE PLAQUETTE	1					

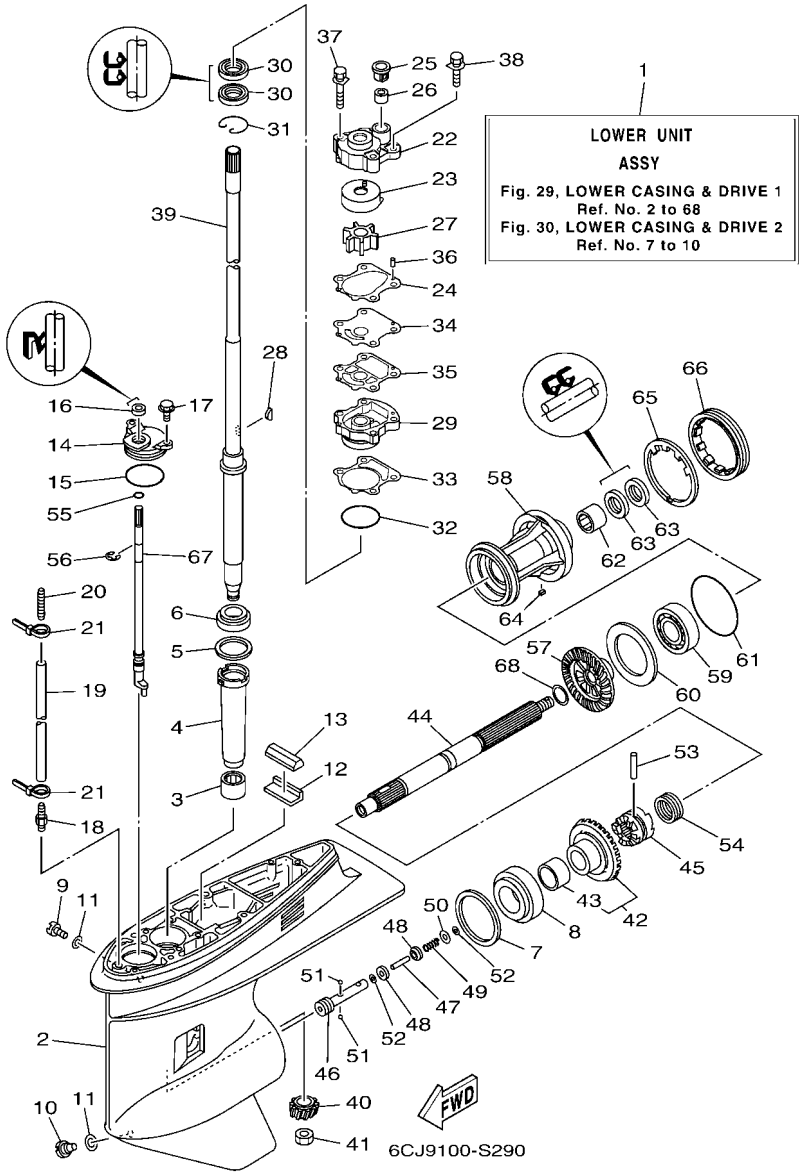

FIG. 29 LOWER CASING & DRIVE 1 — BOITIER D'HELICE TRANSMISSION1

REF. NO.	PART NO. N° PIECES	DESCRIPTION DESCRIPTION	6CJA					REMARKS REMARQUES
15	93210–49046	O-RING JOINT TORIQUE	1					
16	93106–09014	OIL SEAL JOINT SPY	1					
17	97E95–06516	BOLT, HEXAGON W/W DEEP RECESS VIS HEXAGONAL AVC RONDELLE	2					
18	6E5–45378–00	NIPPLE, HOSE RACCORD, TUYAU	1					
19	90445–07ME8	HOSE (L80) DURITE (L80)	1					L(21.0") L(21.0")
	90445–07M31	HOSE (L200) DURITE (L200)	1					X(25.5") X(25.5")
20	6E5–83558–10	END, NIPPLE RACCORD DE NIPPLE	1					
21	90465–11M10	CLAMP BRIDE	2					
22	6CJ–44311–00	HOUSING, WATER PUMP CORPS, POMPE A EAU	1					
23	63D–44322–00	INSERT, CARTRIDGE CUVETTE	1					
24	6CJ–44315–00	GASKET, WATER PUMP JOINT, POMPE A EAU	1					
25	63D–44312–00	COVER, WATER PUMP HOUSING COUVERCLE	1					
26	663–44366–00	DAMPER, WATER SEAL 2 JOINT, TUBE D'EAU 2	1					
27	6H3–44352–00	IMPELLER TURBINE	1					
28	90280–03M03	KEY, WOODRUFF CLAVETTE, DEMI-LUNE	1					
29	6CJ–44341–00–CA	HOUSING, WATER PUMP CORPS, POMPE A EAU	1					
30	93101–23070	OIL SEAL JOINT SPY	2					
31	93450–40165	CIRCLIP CIRCLIP	1					
32	93210–46044	O-RING JOINT TORIQUE	1					
33	6CJ–44316–00	GASKET, WATER PUMP JOINT, POMPE A EAU	1					
34	6CJ–44323–00	OUTER PLATE, CARTRIDGE PLAQUE EXTERIEURE	1					
35	6CJ–44324–00	GASKET, CARTRIDGE JOINT	1					
36	93604–10M03	PIN, DOWEL CLAVETTE	2					
37	90119–08M33	BOLT, WITH WASHER BOULON, AVEC RONDELLE	2					
38	90119–08M14	BOLT, WITH WASHER BOULON, AVEC RONDELLE	2					
39	64J–45501–30	DRIVE SHAFT COMP. ARBRE MOTEUR COMP.	1					L(21.0") L(21.0")
	64J–45501–40	DRIVE SHAFT COMP. ARBRE MOTEUR COMP.	1					X(25.5") X(25.5")

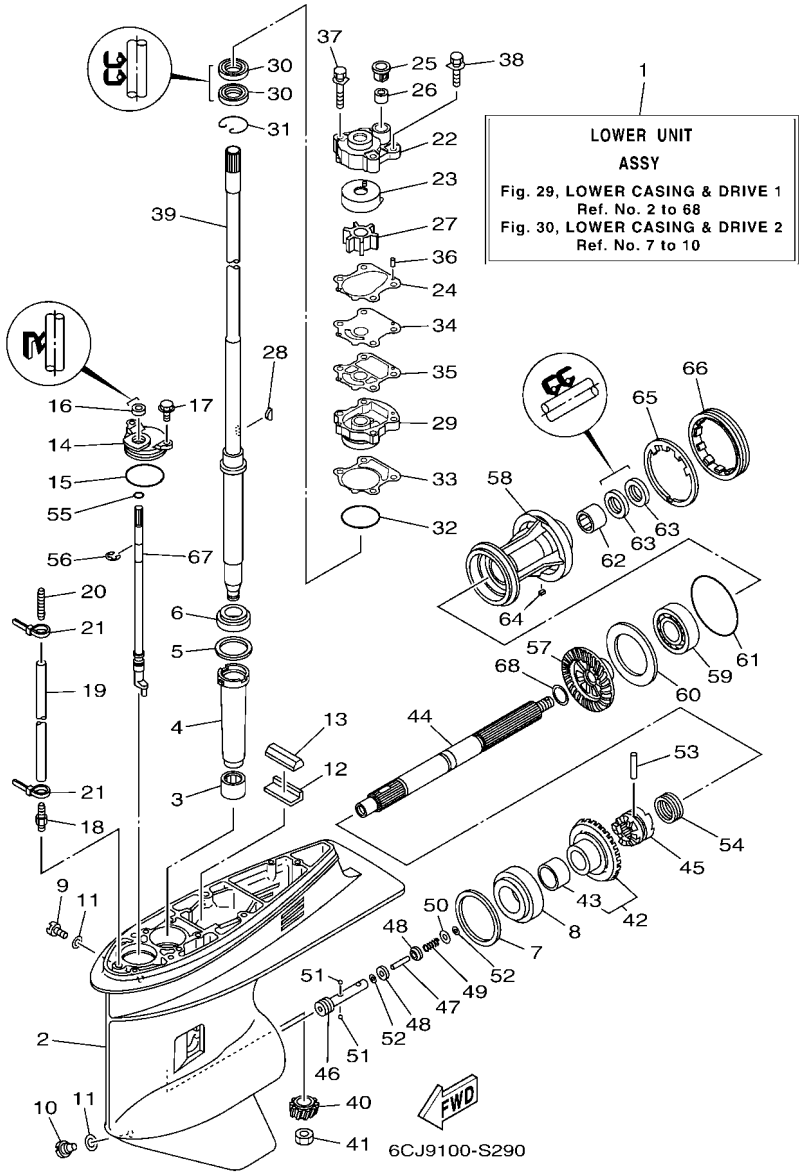

FIG. 29 LOWER CASING & DRIVE 1 — BOITIER D'HELICE TRANSMISSION1

REF. NO.	PART NO. N° PIECES	DESCRIPTION DESCRIPTION	6CJA					REMARKS REMARQUES
40	6CJ–45551–00	PINION (12T) PIGNON D'ATTAQUE (12D)	1					
41	90170–16M01	NUT ECROU	1					
42	6CJ–45560–00	GEAR 1 (28T) PIGNON 1 (28T)	1					
43	93317–322V0	.BEARING .ROULEMENT	1					
44	67F–45611–01	SHAFT, PROPELLER ARBRE, HELICE	1					
45	6D8–45631–00	CLUTCH, DOG CRABOT	1					
46	67F–45634–00	SLIDE, SHIFT CONTRE-POUSSOIR	1					
47	6H1–45668–00	SHAFT, FREE 1 AXE 1	1					
48	6H1–45635–00	PLUNGER, SHIFT POUSSOIR D'EMBRAYAGE	2					
49	90501–12M48	SPRING, COMPRESSION RESSORT, COMPRESSION	1					
50	90201–03313	WASHER, PLATE RONDELLE, PLATE	1					
51	93503–16003	BALL BILLES	2					
52	90183–02M03	NUT, SPRING ECROU, RESSORT	2					
53	90250–07M02	PIN, STRAIGHT GOUPILLE, DROITE	1					
54	688–45633–00	RING, CROSS PIN JONC, GOUPILLE CRABOT	1					
55	93210–07003	O-RING JOINT TORIQUE	1					
56	99001–08600	CIRCLIP CIRCLIP	1					
57	68S–45571–00	GEAR 2 (28T) PIGNON 2 (28T)	1					
58	67F–45331–00–CA	HOUSING, BEARING FLASQUE, ROULEMENT	1					
59	93306–207U0	BEARING ROULEMENT	1					
60	67F–45576–00	WASHER, THRUST 2 RONDELLE DE CALAGE 2	1					
61	93210–86M39	O-RING JOINT TORIQUE	1					
62	93317–325U0	BEARING ROULEMENT	1					
63	93101–25M03	OIL SEAL JOINT SPY	2					
64	90282–04010	KEY, STRAIGHT CLAVETTE, DROITE	1					
65	688–45383–02	WASHER, CLAW FREIN D'ECROU	1					
66	688–45384–02	NUT ECROU	1					

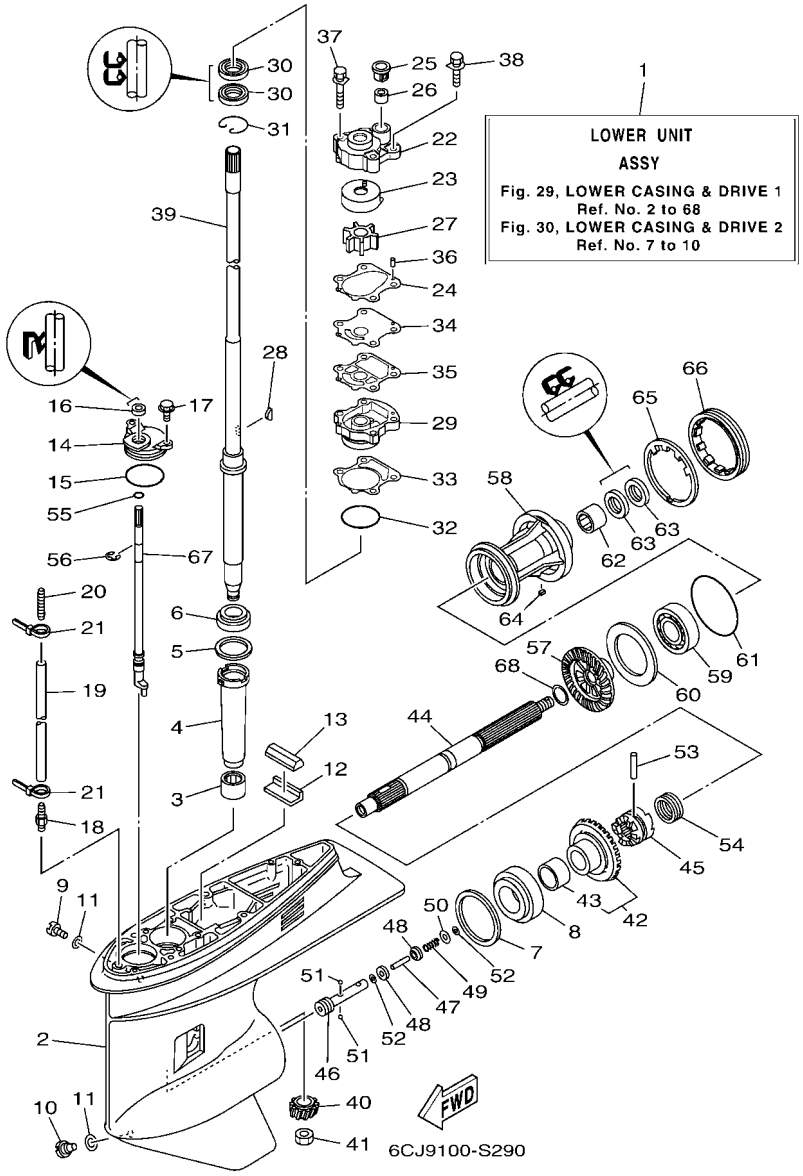

FIG. 29 LOWER CASING & DRIVE 1 — BOITIER D'HELICE TRANSMISSION1

REF. NO.	PART NO. N° PIECES	DESCRIPTION DESCRIPTION	6CJA					REMARKS REMARQUES
67	64J–44150–01	SHIFT CAM ASSY CAME D'INVERSION	1					
68	90201–25M05	WASHER, PLATE RONDELLE, PLATE	1					

FIG. 30 LOWER CASING & DRIVE 2 — BOITIER D'HELICE TRANSMISSION2

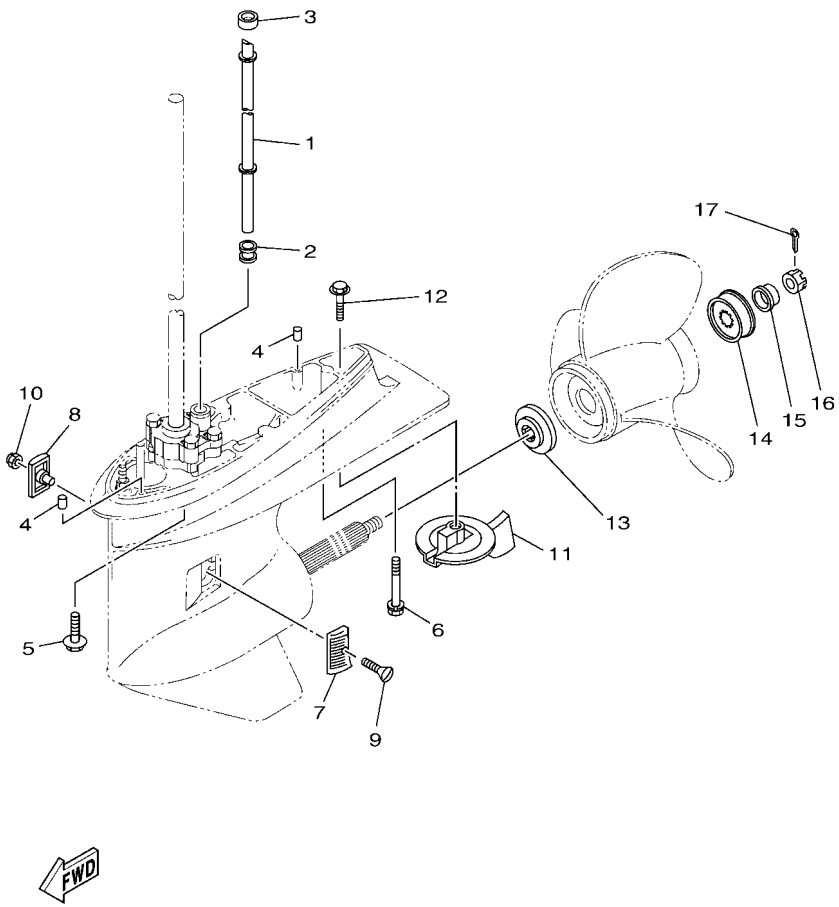

6CJ9100-S300

REF. NO.	PART NO. N° PIECES	DESCRIPTION DESCRIPTION	6CJA					REMARKS REMARQUES
1	6CJ–44361–00	TUBE, WATER 1 TUBE D'EAU 1	1					L(21.0") L(21.0")
	6CJ–44361–10	TUBE, WATER 1 TUBE D'EAU 1	1					X(25.5") X(25.5")
2	663–44367–00	DAMPER, WATER SEAL 3 JOINT TUBE D'EAU 3	1					
3	663–44366–00	DAMPER, WATER SEAL 2 JOINT, TUBE D'EAU 2	1					
4	93606–12019	PIN, DOWEL GOUPILLE	2					
5	90119–10068	BOLT, WITH WASHER BOULON, AVEC RONDELLE	4					L(21.0") L(21.0")
6	90119–08M84	BOLT, WITH WASHER BOULON, AVEC RONDELLE	1					L(21.0") L(21.0")
7	6H1–45214–00	COVER, WATER INLET 1 GRILLE, ENTREE D'EAU 1	1					
8	6H1–45215–00	COVER, WATER INLET 2 GRILLE, ENTREE D'EAU 2	1					
9	90151–05M00	SCREW, COUNTERSUNK VIS, TETE NOYEE	1					
10	90185–05002	NUT, NYLON ECROU,AUTO-BLOQUANT	1					
11	67F–45371–00	TAB-TRIM ANODE DERIVE	1					
12	90105–10M67	BOLT, FLANGE BOULON, A COLLERETTE	1					
13	688–45987–01	SPACER 1 ENTRETOISE 1	1					
14	67F–45997–00	SPACER 2 ENTRETOISE 2	1					
15	90389–25M00	BUSH DOUILLE	1					
16	90171–16011	NUT, CASTLE ECROU, CRENELE	1					
17	91490–30025	PIN. COTTER GOUPILLE	1					

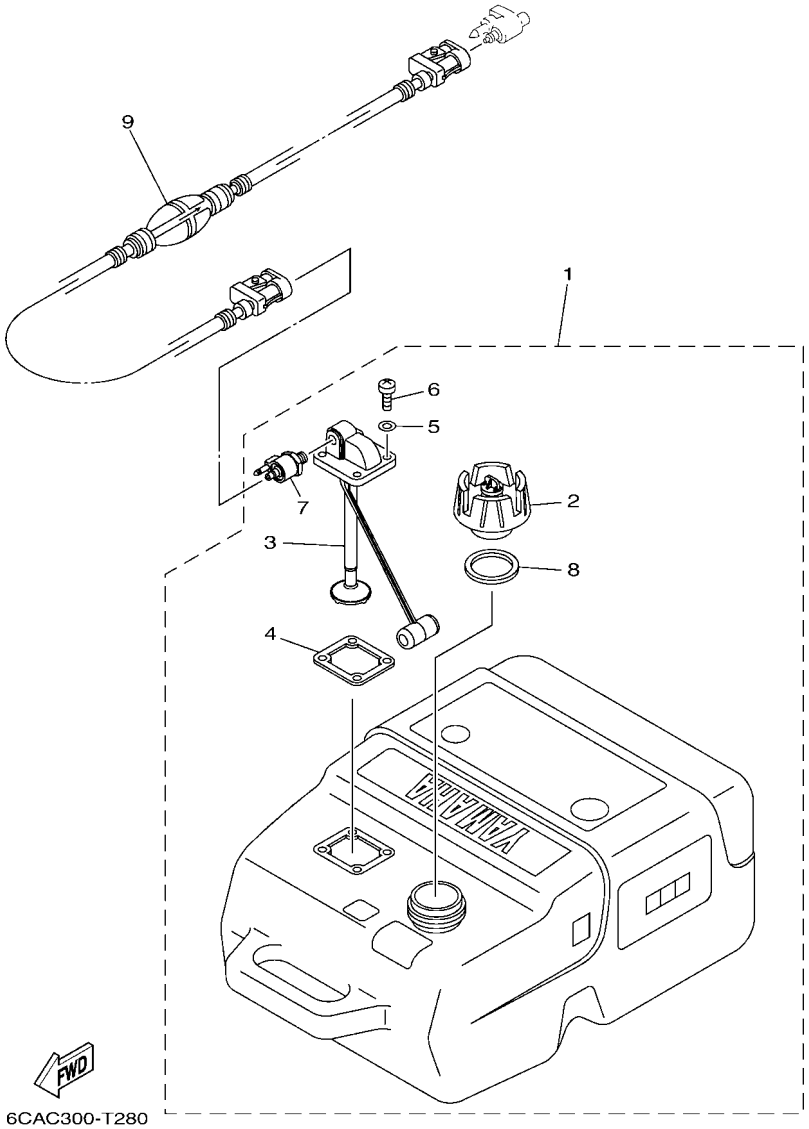

FIG. 31 FUEL TANK — RESERVOIR A CARBURANT

REF. NO.	PART NO. N° PIECES	DESCRIPTION DESCRIPTION	6CJA					REMARKS REMARQUES
1	6YK–24201–05	FUEL TANK COMP. RESERVOIR A ESSENCE (ENS.)	1					AP AP
2	6YK–24610–10	.CAP ASSY .BOUCHON	1					WITHOUT INDICATOR WITHOUT INDICATOR
3	6YK–24260–20	.FUEL METER ASSY .INDICATEUR DE CARBURANT	1					
4	6YL–24268–01	.GASKET, FUEL METER .JOINT, JAUGE A CARBURANT	1					
5	6YL–24329–00	.SEAL .JOINT	4					
6	90157–05M16	.SCREW, PAN HEAD .VIS, TETE TRONCONIQUE	4					
7	6YL–24377–11	.PIPE, JOINT 2 .DURITE RACCORDEMENT 2	1					
8	6YL–24641–00	.GASKET, CAP 1 .JOINT 1, BOUCHON	1					
9	6YL–24306–54	FUEL PIPE COMP. 1 DURITE A ESSENCE 1	1					AP AP

FIG. 32 STEERING GUIDE — FIXATION DE DIRECTION

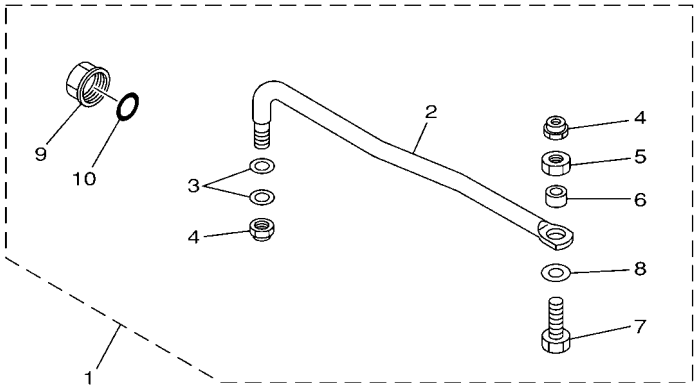

65W0010-8210

REF. NO.	PART NO. N° PIECES	DESCRIPTION DESCRIPTION	6CJA					REMARKS REMARQUES
1	65W–61350–00	STEERING GUIDE ATTACHMENT KIT FIXATIONS DE DIRECTION	1					AP AP
2	65W–61351–00	.ROD, STEERING LINK .RENVOI DE DIRECTION	1					
3	90201–10M20	.WASHER, PLATE .RONDELLE, PLATE	2					
4	90185–09M01	.NUT, SELF-LOCKING .ECROU,AUTO-BLOQUANT	2					
5	90170–09M03	.NUT .ECROU	1					
6	90387–10M42	.COLLAR .COLLERETTE	1					
7	90101–09M01	.BOLT .BOULON	1					
8	90201–10M63	.WASHER, PLATE .RONDELLE, PLATE	1					
9	6E5–43145–01	.CAP, CLAMP BRACKET .CAPUCHON, PRESSE	1					
10	93210–16275	.O-RING .JOINT TORIQUE	1					

FIG. 33 OPTIONAL PARTS 1 — PIECES OPTIONNELLES 1

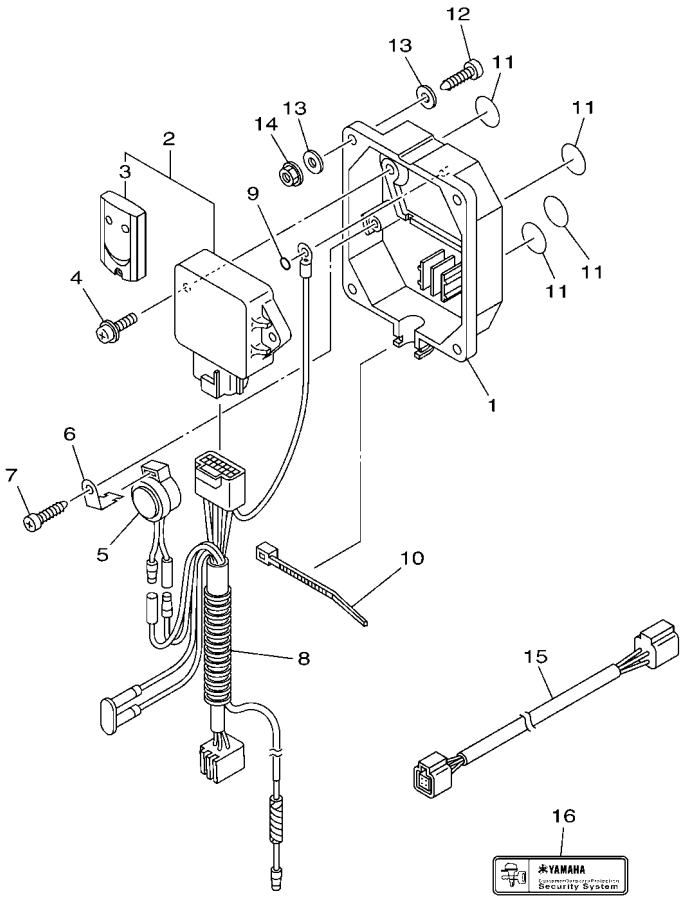

6CJ1100-K370

REF. NO.	PART NO. N° PIECES	DESCRIPTION DESCRIPTION	6CJA					REMARKS REMARQUES
1	6Y8–86267–00	CASE COMPLETE 1 CARTER (ENS.) 1	1					
2	6Y8–86260–03	REMOTE CONTROL UNIT ASSY UNITE DE TELECOMMANDE (ENS.)	1					
3	6AA–86261–01	.XMTR. COMP. .XMTR. COMP.	2					
4	97980–06216	SCREW, WITH WASHER VIS, AVEC RONDELLE	2					
5	6X4–83383–00	BUZZER RONFLEUR	1					
6	6X4–83386–00	STAY, BUZZER SUPPOR, RONFLEUR	1					
7	97780–60620	SCREW, TAPPING VIS, TETE BOMBEE	1					
8	6Y8–82509–10	WIRE, SUB LEAD FIL, SECONDAIRE	1					
9	93210–04279	O-RING JOINT TORIQUE	1					
10	90465–11M10	CLAMP BRIDE	1					
11	6Y8–8454G–00	PATCH 1 TAMPON 1	4					
12	90167–06M00	SCREW, TAPPING VIS, TETE FRAISEE	4					UR UR
	97880–06035	SCREW, PAN HEAD VIS, TETE TRONCONIQUE	4					UR UR
13	90201–06M30	WASHER, PLATE RONDELLE, PLATE	8					
14	95780–06300	NUT, FLANGE ECROU	4					
15	6Y8–82521–11	2FT PIGTAIL BUS FAISCEAU (L: 2FT.)	1					
16	6Y8–48277–00	STICKER 1 ETIQUETTE 1	4					

FIG. 34 OPTIONAL PARTS 2 — PIECES OPTIONNELLES 2

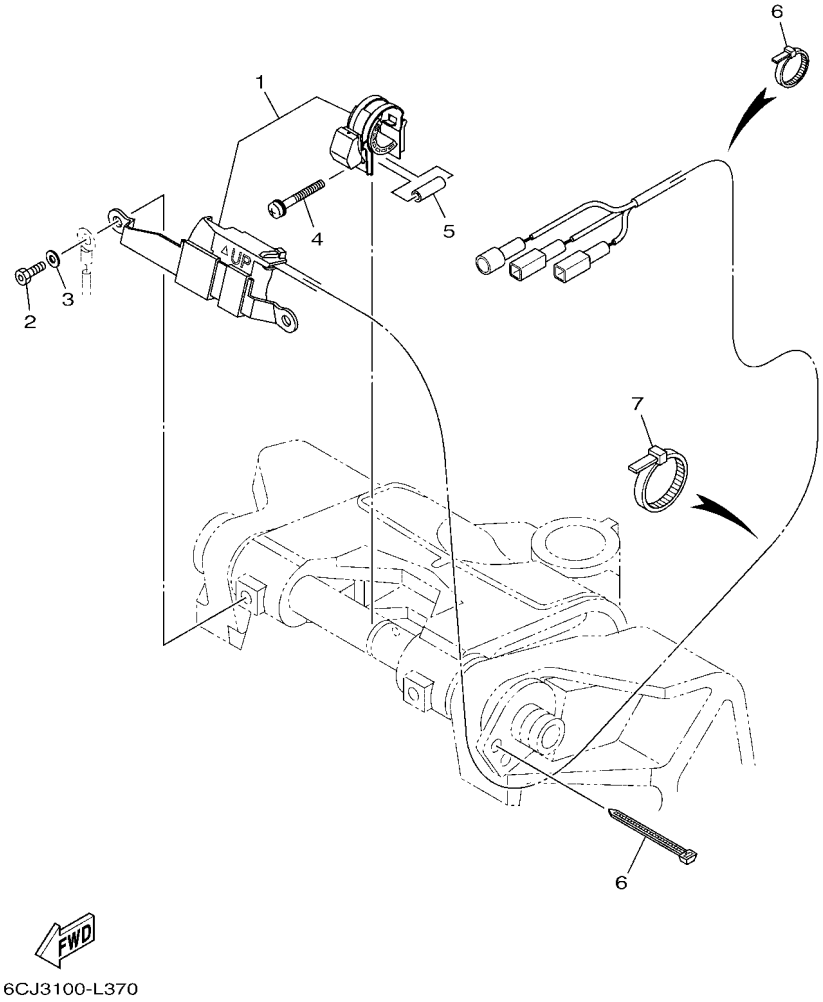

REF. NO.	PART NO. N° PIECES	DESCRIPTION DESCRIPTION	6CJA					REMARKS REMARQUES
1	6C5–825E0–00	TILT LIMIT SWITCH ASSY COMMUTATEUR, LIMIT INCLINAISON	1					
2	90109–06M88	BOLT BOULON	2					
3	92990–06100	WASHER, SPRING RONDELLE, GROWER	2					
4	90159–05059	SCREW, WITH WASHER VIS, AVEC RONDELLE	1					
5	90387–05004	COLLAR COLLERETTE	1					
6	90465–11M10	CLAMP BRIDE	5					
7	90465–13M18	CLAMP BRIDE	3					

FIG. 35 REPAIR KIT 1 — KITS DE REPARATION 1

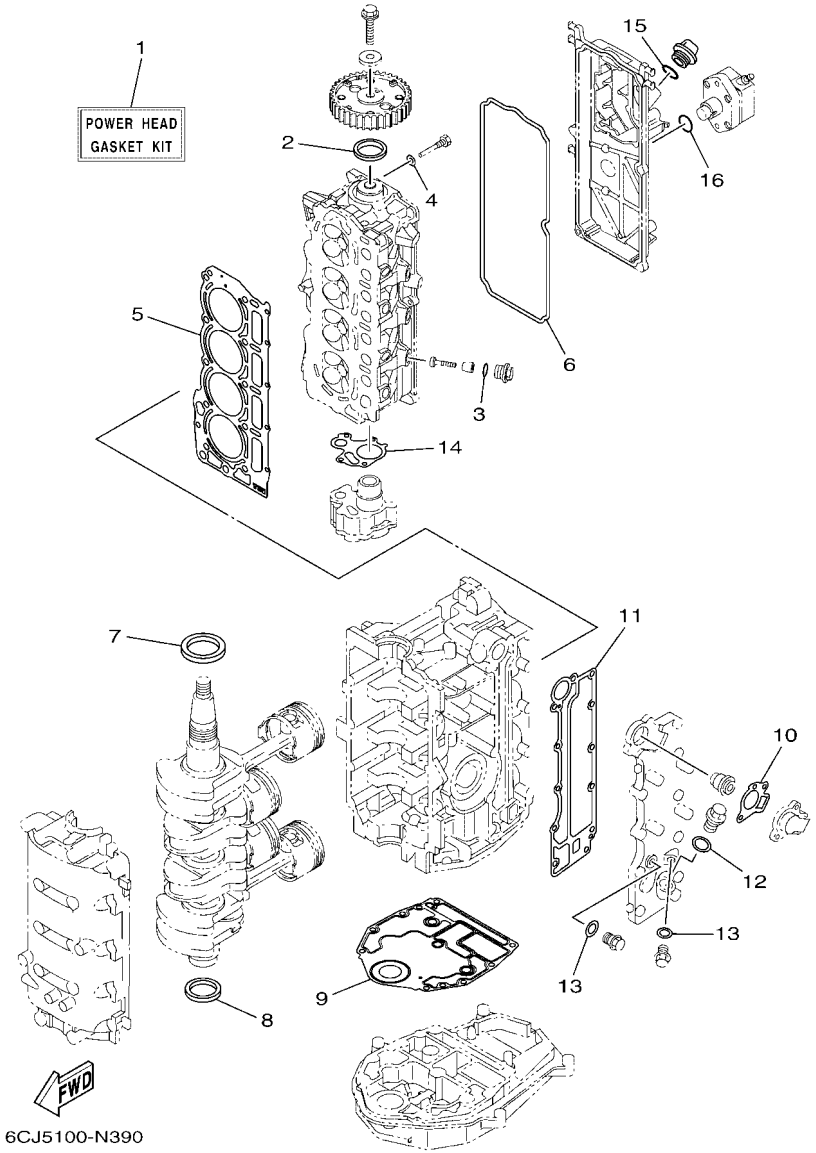

REF. NO.	PART NO. N° PIECES	DESCRIPTION DESCRIPTION	6CJA					REMARKS REMARQUES
1	6CJ–W0001–01	POWER HEAD GASKET KIT POCHETTE DE JINTS TETE MOTRICE	1					
2	93102–37M40	.OIL SEAL .JOINT SPY	1					
3	93210–13M63	.O-RING .JOINT TORIQUE	3					
4	90430–06014	.GASKET .JOINT	1					
5	6CJ–11181–00	.GASKET, CYLINDER HEAD 1 .JOINT, DE CULASSE 1	1					
6	6CJ–11356–00	.SEAL, CYLINDER 2 .JOINT, SPY CYLINDRE	1					
7	93102–43004	.OIL SEAL .JOINT SPY	1					
8	93101–35002	.OIL SEAL .JOINT SPY	1					
9	6BG–11351–00	.GASKET, CYLINDER .JOINT, D'EMBASE	1					
10	62Y–12414–00	.GASKET, COVER .JOINT, COUVERCLE	1					
11	6C5–41114–10	.GASKET, EXHAUST OUTER COVER .JOINT, COUVERCLE D'ECHAPPEMENT	1					
12	90201–186F1	.WASHER, PLATE .RONDELLE, PLATE	1					
13	90430–14115	.GASKET .JOINT	2					
14	6C5–13329–00	.GASKET, PUMP COVER .JOINT, COUVERCLE DE POMPE	1					
15	93210–24M79	.O-RING .JOINT TORIQUE	1					
16	93210–24M79	.O-RING .JOINT TORIQUE	1					

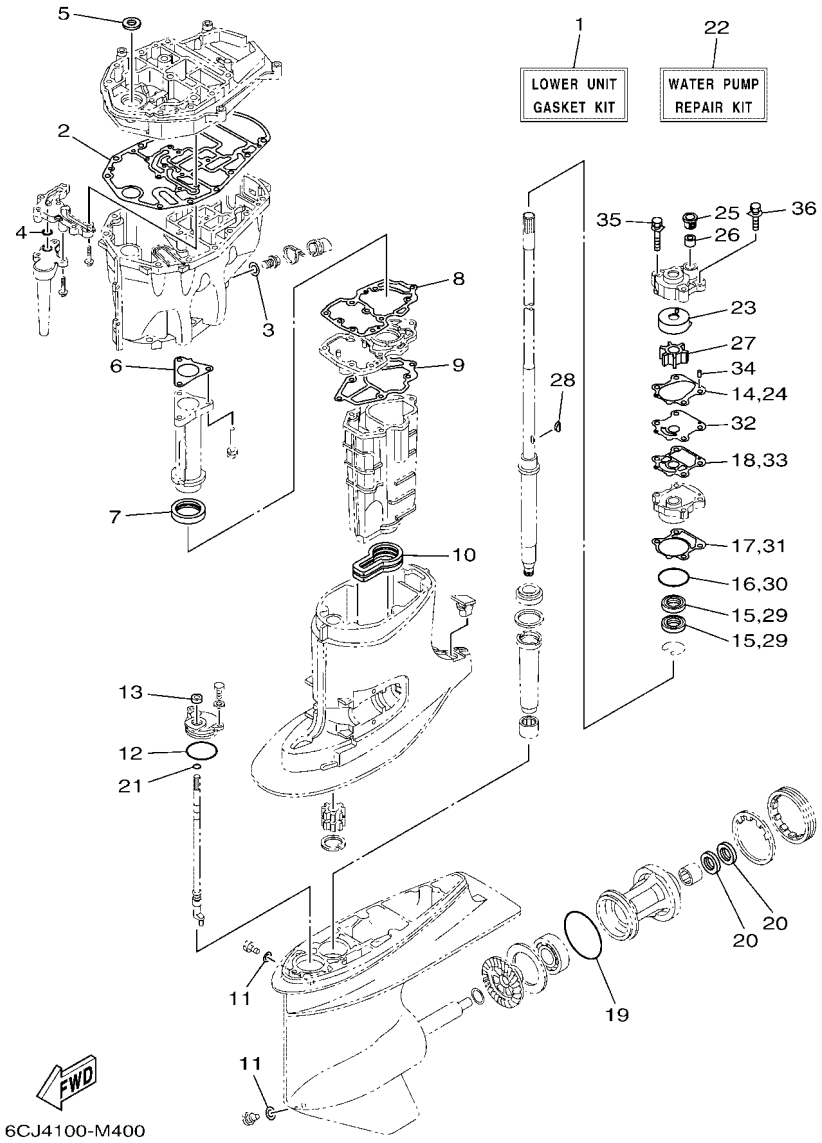

FIG. 36 REPAIR KIT 2 — KITS DE REPARATION 2

REF. NO.	PART NO. N° PIECES	DESCRIPTION DESCRIPTION	6CJA					REMARKS REMARQUES
1	6CJ–W0001–21	LOWER UNIT GASKET KIT POCHETTE DE JOINTS EMBASE	1					
2	6C5–15312–01	.GASKET, OIL PAN .JOINT DE VENTILATEUR D'HUILE	1					
3	90430–14M09	.GASKET .JOINT	1					
4	93210–12790	.O-RING .JOINT TORIQUE	1					
5	93103–18011	.OIL SEAL .JOINT SPY	1					
6	6C5–41133–00	.GASKET, EXHAUST MANIFOLD 1 .JOINT, PIPE D'ECHAPPEMENT	1					
7	6C5–46132–00	.GASKET 1 .JOINT 1	1					
8	6C5–41134–00	.GASKET, EXHAUST MANIFOLD .JOINT, PIPE D'ECHAPPEMENT	1					
9	6C5–41135–00	.GASKET, EXHAUST MANIFOLD .JOINT, PIPE D'ECHAPPEMENT	1					
10	6C5–45123–00	.GASKET, MUFFLER .JOINT, POT DE DETENTE	1					
11	90430–08003	.GASKET .JOINT	2					
12	93210–49046	.O-RING .JOINT TORIQUE	1					
13	93106–09014	.OIL SEAL .JOINT SPY	1					
14	6CJ–44315–00	.GASKET, WATER PUMP .JOINT, POMPE A EAU	1					
15	93101–23070	.OIL SEAL .JOINT SPY	2					
16	93210–46044	.O-RING .JOINT TORIQUE	1					
17	6CJ–44316–00	.GASKET, WATER PUMP .JOINT, POMPE A EAU	1					
18	6CJ–44324–00	.GASKET, CARTRIDGE .JOINT	1					
19	93210–86M39	.O-RING .JOINT TORIQUE	1					
20	93101–25M03	.OIL SEAL .JOINT SPY	2					
21	93210–07003	.O-RING .JOINT TORIQUE	1					
22	6CJ–W0078–00	WATER PUMP REPAIR KIT KIT DE REPARATION DE LA POMPE	1					
23	63D–44322–00	.INSERT, CARTRIDGE .CUVETTE	1					
24	6CJ–44315–00	.GASKET, WATER PUMP .JOINT, POMPE A EAU	1					
25	63D–44312–00	.COVER, WATER PUMP HOUSING .COUVERCLE	1					
26	663–44366–00	.DAMPER, WATER SEAL 2 .JOINT, TUBE D'EAU 2	1					
27	6H3–44352–00	.IMPELLER .TURBINE	1					

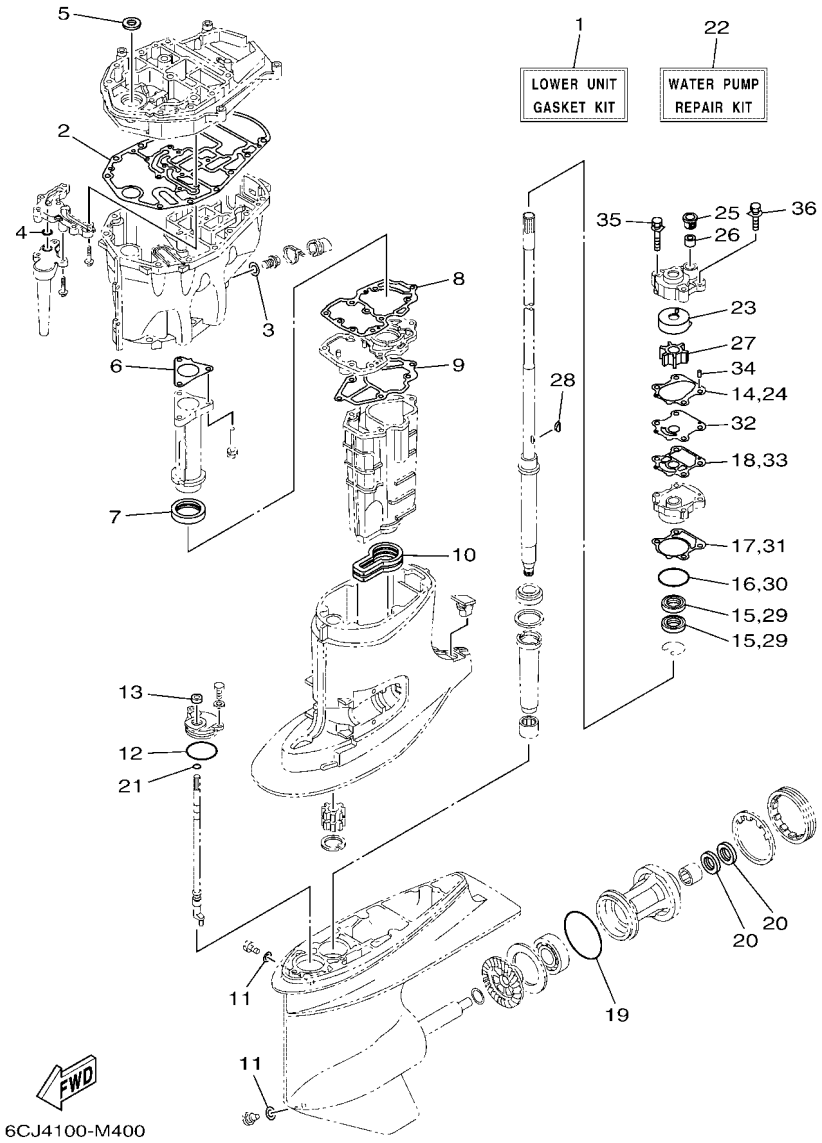

FIG. 36 REPAIR KIT 2 — KITS DE REPARATION 2

REF. NO.	PART NO. N° PIECES	DESCRIPTION DESCRIPTION	6CJA					REMARKS REMARQUES
28	90280–03M03	.KEY, WOODRUFF .CLAVETTE, DEMI-LUNE	1					
29	93101–23070	.OIL SEAL .JOINT SPY	2					
30	93210–46044	.O-RING .JOINT TORIQUE	1					
31	6CJ–44316–00	.GASKET, WATER PUMP .JOINT, POMPE A EAU	1					
32	6CJ–44323–00	.OUTER PLATE, CARTRIDGE .PLAQUE EXTERIEURE	1					
33	6CJ–44324–00	.GASKET, CARTRIDGE .JOINT	1					
34	93604–10M03	.PIN, DOWEL .CLAVETTE	2					
35	90119–08M33	.BOLT, WITH WASHER .BOULON, AVEC RONDELLE	2					
36	90119–08M14	.BOLT, WITH WASHER .BOULON, AVEC RONDELLE	2					

PART NO. N° PIECES	REF. NO.
6CJ–11111–10–9S	5 – 2
62Y–11119–00	18 – 7
6CJ–11119–00	5 – 19
6AH–11133–10	5 – 3
6C5–11168–00	5 – 15
6CJ–11181–00	5 – 10
	35 – 5
6CJ–11191–00–9S	5 – 14
6CJ–11192–00	5 – 21
6G8–11197–A0	5 – 6
62Y–11325–00	1 – 3
	3 – 17
6G8–11325–00	1 – 5
	5 – 4
66M–11327–00–94	3 – 19
66M–11328–00	3 – 18
6BG–11351–00	3 – 7
	35 – 9
6CJ–11356–00	5 – 17
	35 – 6
6CJ–11372–00	9 – 3
6C5–11411–10	4 – 1
6BG–11416–00	4 – 2
6BG–11416–10	4 – 2
6BG–11416–20	4 – 2
6BG–11416–30	4 – 2
6C5–11536–00	12 – 7
6C5–11537–10	12 – 2
6H4–11545–00	14 – 10
62Y–11557–00	12 – 8
67C–11603–00	4 – 7
67C–11604–00	4 – 7
67C–11605–00	4 – 7
6CJ–11631–00–96	4 – 6
62Y–11633–00	4 – 8
6CJ–11635–00	4 – 6
6CJ–11636–00	4 – 6
6C5–11650–10	4 – 3
6C5–11654–00	4 – 4
6CJ–11656–00	4 – 5
6CJ–11656–10	4 – 5
6CJ–11656–20	4 – 5
6CJ–11656–30	4 – 5
6CJ–12111–00	6 – 1
6CJ–12113–00	6 – 4
6CJ–12116–00	6 – 3
3LD–12117–00	6 – 5
3LD–12118–00	6 – 6

PART NO. N° PIECES	REF. NO.
51Y–12119–00	6 – 7
6CJ–12121–10	6 – 2
6CJ–12146–00	6 – 8
6CJ–12151–00	6 – 9
62Y–12158–00	6 – 14
6C5–12158–00	6 – 11
64J–12159–00	6 – 13
6C5–12159–00	6 – 10
6CJ–12161–00	6 – 12
6CJ–12171–00	12 – 1
6CJ–12231–00	6 – 15
6CJ–12233–00	6 – 16
6G8–12411–03	1 – 1
	3 – 11
688–12412–00	3 – 12
6C5–12413–00–9S	3 – 13
62Y–12414–00	1 – 2
	3 – 14
	35 – 10
6BG–12481–00	21 – 14
62Y–12481–10	3 – 10
66M–12535–00	3 – 20
6AW–12572–00	21 – 6
6CJ–12576–00	9 – 7
6R3–12580–00	21 – 8
6C5–12858–A0	3 – 28
6CJ–13131–00	13 – 30
6C5–13161–00	7 – 10
6CJ–13300–00	12 – 11
6C5–13329–00	12 – 12
	35 – 14
6CJ–13411–10	28 – 8
6CJ–13428–00	8 – 16
6C5–13437–63	14 – 23
5GH–13440–60	1 – 4
	3 – 27
6C5–13542–00	11 – 3
6CJ–13543–00	9 – 5
6BG–13545–00	11 – 19
6CJ–13546–00	11 – 2
6C5–13547–00	11 – 23
6C5–13557–00	7 – 4
6C5–13577–00	11 – 11
6C5–13593–00	10 – 20
6CJ–13641–01	7 – 2
6C5–13645–00	7 – 3
6C5–13713–00	9 – 1
6C5–13716–00	10 – 22

PART NO. N° PIECES	REF. NO.
6C5–13739–00	11 – 1
6CJ–13750–01	7 – 5
6C5–13761–00	7 – 13
6C5–13781–00	10 – 21
6C5–13906–01	10 – 9
6C5–13907–00	10 – 17
6C5–13910–10	10 – 16
6C5–13915–00	1 – 7
	10 – 18
6CJ–13974–10	11 – 16
6C5–1410B–00	7 – 14
6C5–1410F–00	11 – 22
6C5–14127–10	10 – 19
6C5–14148–00	11 – 14
6BG–14149–00	11 – 9
6CJ–14180–03	10 – 1
6C5–14182–20	10 – 2
6C5–14191–00	10 – 13
6CJ–14200–02	7 – 1
6C5–14225–00	10 – 25
6C5–14251–00	11 – 13
6C5–14386–00	10 – 5
6C5–14397–00	10 – 14
6C5–14440–10	8 – 4
6C5–14446–00	7 – 12
6C5–14453–01	8 – 5
6C5–14496–00	7 – 9
6C5–14546–10	10 – 4
6C5–14567–00	10 – 15
6CJ–14711–01	27 – 12
6C5–14960–20	10 – 12
6C5–14984–10	1 – 8
	10 – 23
6C5–14985–00	10 – 3
6CJ–15100–01	3 – 2
6C5–15311–02	28 – 1
6C5–15312–01	28 – 2
	36 – 2
6CJ–15316–00	28 – 4
6CJ–1531A–00	9 – 12
6CJ–15333–10	28 – 10
6C5–15362–00	28 – 12
6G8–15363–00	5 – 23
6C5–15378–00	8 – 18
6C5–15378–11	8 – 20
6C5–21337–10	10 – 24
6C5–21841–01	11 – 12
6C5–22435–00	25 – 20

PART NO. N° PIECES	REF. NO.
6CJ–22471–10	25 – 13
6CJ–24135–00	21 – 21
6BG–24136–01	21 – 19
6YK–24201–05	31 – 1
6C5–24251–00	1 – 9
	11 – 20
6YK–24260–20	31 – 3
6YL–24268–01	31 – 4
6G1–24304–10	13 – 1
6YL–24306–54	31 – 9
6BG–24311–00	13 – 24
6BG–24313–00	13 – 3
6CJ–24321–00	11 – 4
6C5–24322–00	11 – 5
6CJ–24323–00	11 – 6
6CJ–24324–00	11 – 7
6CJ–24325–00	11 – 8
6BG–24329–00	20 – 25
6YL–24329–00	31 – 5
6CJ–24374–00	13 – 35
67F–24377–00	13 – 4
6YL–24377–11	31 – 7
688–24378–00	21 – 10
	21 – 13
6C5–24379–00	11 – 18
6BG–24387–00	11 – 15
6CJ–24410–00	13 – 26
62Y–24411–02	13 – 28
6CJ–24415–00	13 – 27
6C5–2441R–10	10 – 6
6C5–2441T–10	10 – 7
62Y–24423–00	13 – 29
6C5–24444–00	11 – 10
62Y–24444–01	13 – 32
6C5–24453–00	10 – 8
6CJ–24454–00	13 – 31
6D8–24469–00	13 – 18
6C5–24471–00	13 – 33
6D8–24519–00	13 – 19
6CJ–2451B–00	11 – 21
6D8–24560–01	13 – 14
6D8–24562–00	13 – 17
6D8–24563–00	1 – 10
	13 – 15
6D8–24564–00	1 – 11
	13 – 16
6CJ–24566–00	13 – 21
6C5–24592–00	10 – 10

PART NO. N° PIECES	REF. NO.
6YK–24610–10	31 – 2
6YL–24641–00	31 – 8
6CJ–28100–00	13 – 39
67F–2812A–00	14 – 7
6C1–28199–7H–D0	13 – 40
6C1–28199–7H–E0	13 – 40
6C1–28199–7H–F0	13 – 40
6C1–28199–7H–G0	13 – 40
6C1–28199–7H–H0	13 – 40
6C1–28199–7H–S0	13 – 40
6C1–28199–8H–K0	13 – 41
6C1–28199–8H–L0	13 – 41
6C1–28199–8H–M0	13 – 41
6C1–28199–8H–N0	13 – 41
6C1–28199–8H–P0	13 – 41
6C1–28199–8H–R0	13 – 41
6C5–41113–11–9S	3 – 8
6C5–41114–10	3 – 15
	35 – 11
6C5–41131–00–CA	27 – 5
6C5–41133–00	27 – 4
	36 – 6
6C5–41134–00	27 – 8
	36 – 8
6C5–41135–00	27 – 11
	36 – 9
6C5–41137–03	27 – 1
688–41211–01	22 – 21
6H4–41237–00	22 – 22
62Y–42154–A0	22 – 24
6C5–42171–00	22 – 25
6BG–42335–A0	22 – 30
6BG–42384–00	21 – 3
69W–42510–01–8D	24 – 1
6CJ–42610–02	2 – 1
6CJ–42615–00	2 – 9
6BG–42617–00	14 – 20
6CJ–4261A–00	2 – 2
6BG–42649–00	2 – 12
6BG–42651–00	2 – 3
6BG–42652–00	2 – 6
6BG–42662–00	2 – 10
6CJ–42675–00	2 – 15
6CJ–42676–00	2 – 16
6CJ–42677–00	2 – 13
6CJ–42678–01	2 – 14
6AH–42697–10	2 – 11
6CJ–42710–01–8D	20 – 1

PART NO. N° PIECES	REF. NO.
62Y–42715–01	22 – 8
62Y–42716–00	20 – 6
61A–42717–00	20 – 8
65W–42717–00	20 – 7
6BG–42724–00	21 – 2
6CJ–42725–00	20 – 10
6CJ–42726–00	20 – 11
6H1–42726–30	21 – 1
68U–42727–00	20 – 24
6BG–42727–00	20 – 12
6BG–42741–10–8D	20 – 26
6BG–42748–00	20 – 4
6H4–42748–00	20 – 2
63P–42756–00	17 – 24
6BG–42761–00	20 – 9
6EE–42794–40	20 – 39
6EE–42794–50	20 – 40
6BG–42811–01	17 – 21
6BG–42815–00–8D	20 – 14
6BG–42816–00	20 – 19
6BG–42851–00	2 – 5
6C5–43111–10–8D	23 – 1
6C5–43112–01–8D	23 – 3
6E5–43126–02	23 – 27
6C5–43131–00	23 – 12
66T–43144–00	20 – 21
6G5–43144–00	23 – 24
6E5–43145–01	32 – 9
6G5–43148–00	23 – 20
6C5–43181–00	23 – 15
6C5–43185–00	23 – 16
6C5–43311–01–8D	23 – 10
6CJ–43800–12	25 – 1
6CJ–43801–10	25 – 3
6CJ–43804–11	26 – 3
6CJ–43805–11	26 – 2
6EK–4380F–00	26 – 6
6C5–4380G–00	25 – 26
6CJ–4380K–11	25 – 22
6CJ–4380R–10	25 – 8
6CJ–43810–10	25 – 2
6C5–43816–00	25 – 25
6C5–43817–10	25 – 23
6CJ–43818–00	23 – 31
6CJ–4381B–10	25 – 17
6CJ–43821–10	25 – 5
62Y–43822–00	25 – 4
6CJ–43829–10	25 – 61

PART NO. N° PIECES	REF. NO.
6EK–4382E–00	25 – 35
6D8–4382L–00	25 – 50
6CJ–43830–10	25 – 28
6C5–43831–00	25 – 62
6C5–43833–00	23 – 32
6C5–43834–00	23 – 33
6D8–43841–00	25 – 29
6D8–43843–00	25 – 45
6D8–43844–00	25 – 44
6H1–43844–10	25 – 48
6CJ–43845–10	25 – 59
69A–4384F–00	25 – 33
6H1–4384G–11	25 – 47
62X–4384H–00	25 – 19
6D8–4384M–00	25 – 32
6D8–43851–00	25 – 40
6C6–43853–00	25 – 37
6C5–43854–00	25 – 52
6C5–43855–10	25 – 42
6C5–43856–10	25 – 49
6C5–43861–00	25 – 11
	25 – 15
6CJ–43862–10	26 – 12
6CJ–43863–00	25 – 7
	25 – 9
6D8–43863–00	25 – 57
62X–4386K–00	26 – 7
6C5–43871–00	25 – 12
6C5–43875–00	25 – 16
6H1–43875–00	25 – 58
6CJ–43879–10	26 – 8
6C6–4387G–00	25 – 36
6CJ–43880–12	26 – 1
6CJ–43881–10	26 – 10
6EK–43882–00	26 – 11
6H1–43883–00	25 – 30
6C5–43885–00	24 – 19
6EK–43892–00	26 – 4
69J–43894–00	25 – 31
6C5–43895–00	25 – 51
6C5–43899–00	25 – 18
69J–4389J–00	25 – 24
	25 – 39
62Y–44117–01	22 – 2
62Y–44118–00–94	22 – 9
6C5–44120–02	22 – 5
6C5–44120–12	22 – 5
69W–44121–00	22 – 1

PART NO. N° PIECES	REF. NO.
688–44122–00	22 – 17
6C5–44122–00	22 – 6
62Y–44135–00	22 – 27
64J–44150–01	29 – 67
6C5–44194–00	24 – 14
6CJ–44311–00	29 – 22
63D–44312–00	29 – 25
	36 – 25
6CJ–44315–00	29 – 24
	36 – 14
	36 – 24
6CJ–44316–00	29 – 33
	36 – 17
	36 – 31
63D–44322–00	29 – 23
	36 – 23
6CJ–44323–00	29 – 34
	36 – 32
6CJ–44324–00	29 – 35
	36 – 18
	36 – 33
6CJ–44341–00–CA	29 – 29
6H3–44352–00	29 – 27
	36 – 27
6CJ–44361–00	30 – 1
6CJ–44361–10	30 – 1
663–44366–00	29 – 26
	30 – 3
	36 – 26
663–44367–00	30 – 2
6CJ–44385–00	24 – 36
6BL–44391–00	21 – 5
6CJ–44514–00	24 – 10
6CJ–44526–00	24 – 12
6CJ–44533–00	24 – 15
6C5–44551–00–8D	24 – 17
6C5–44552–00–8D	24 – 20
69W–44555–00	24 – 21
6CJ–44575–00	24 – 23
6C5–45111–00–8D	27 – 22
6C5–45123–00	27 – 14
	36 – 10
6C5–45135–10	28 – 13
6C5–45136–10	28 – 14
6C5–45155–00	27 – 17
6CJ–45181–01	27 – 9
6C5–45211–00–8D	27 – 23
6C5–45213–01	27 – 24

PART NO. N° PIECES	REF. NO.
6H1–45214–00	30 – 7
6H1–45215–00	30 – 8
65W–45251–00	1 – 12
	1 – 13
	23 – 6
	23 – 8
	23 – 25
6CJ–45300–31–8D	29 – 1
6CJ–45300–41–8D	29 – 1
67F–45301–00–8D	29 – 2
69W–45318–00	27 – 18
688–45321–00	29 – 14
67F–45331–00–CA	29 – 58
688–45341–10	29 – 10
67F–45371–00	1 – 16
	30 – 11
688–45375–00	29 – 13
663–45376–00	29 – 12
6E5–45378–00	29 – 18
688–45383–02	29 – 65
688–45384–02	29 – 66
64J–45501–30	29 – 39
64J–45501–40	29 – 39
688–45536–01	29 – 4
6CJ–45551–00	29 – 40
6CJ–45560–00	29 – 42
688–45567–01	29 – 7
688–45567–10	29 – 7
688–45567–20	29 – 7
688–45567–30	29 – 7
688–45567–40	29 – 7
688–45567–50	29 – 7
688–45567–60	29 – 7
68S–45571–00	29 – 57
67F–45576–00	29 – 60
688–45587–01	29 – 5
688–45587–10	29 – 5
688–45587–20	29 – 5
688–45587–30	29 – 5
688–45587–40	29 – 5
688–45587–50	29 – 5
688–45587–60	29 – 5
67F–45611–01	29 – 44
6D8–45631–00	29 – 45
688–45633–00	29 – 54
67F–45634–00	29 – 46
6H1–45635–00	29 – 48
6H1–45668–00	29 – 47

PART NO. N° PIECES	REF. NO.
688–45987–01	30 – 13
67F–45997–00	30 – 14
6C5–46132–00	27 – 6
	36 – 7
6C5–46241–00	12 – 6
6Y8–48277–00	33 – 16
69W–48344–00	22 – 20
	22 – 34
65W–48511–01	24 – 40
6BG–48538–00	20 – 37
65W–61350–00	32 – 1
65W–61351–00	32 – 2
6C5–81145–00	7 – 7
6C5–81146–10	7 – 15
68V–81315–00	15 – 19
6CJ–81337–10	14 – 1
6C5–81410–01	14 – 9
6C5–81450–00	14 – 8
6CJ–81800–01	19 – 1
69J–81801–11	19 – 5
67F–81807–00	19 – 10
67F–81808–00	19 – 8
67F–81809–00	19 – 19
67F–81810–00	19 – 3
67F–81813–00	19 – 6
6C5–81815–00	16 – 3
68F–81820–00	19 – 7
67F–81821–00	19 – 13
6CJ–81822–00	18 – 1
6K7–81826–11	19 – 24
69J–81828–00	19 – 25
6C5–8182L–00	7 – 8
67F–81830–00	19 – 17
67F–81832–00	19 – 11
67F–81836–00	19 – 12
6C5–81839–00	19 – 21
67F–8183R–00	19 – 15
60V–8183T–00	19 – 18
6P2–8183X–00	16 – 13
69J–81840–11	19 – 4
67F–81841–00	19 – 14
60X–81842–00	19 – 20
67F–81846–00	19 – 26
67F–81850–00	19 – 2
67F–81857–00	19 – 9
6C5–81869–00	19 – 23
67F–81891–00	19 – 16
6CJ–81919–00	14 – 22

PART NO. N° PIECES	REF. NO.
60V–81925–00	18 – 15
6C5–81941–00	19 – 22
6CJ–81942–00	15 – 23
6CJ–81948–01	16 – 5
68V–8194A–00	16 – 16
60E–81950–00	16 – 1
63P–81950–00	16 – 12
68F–81953–00	16 – 19
68V–81960–10	15 – 13
6EE–81994–40	14 – 26
6EE–81994–50	14 – 27
6EE–81995–40	14 – 24
6EE–81995–50	14 – 25
6AG–81996–00	14 – 28
6C5–82105–U1	18 – 19
6G5–82119–00	16 – 18
67C–82127–10	24 – 34
6E5–82148–00	23 – 4
67F–82151–00	17 – 7
5JJ–82151–10	17 – 11
67F–82151–10	17 – 9
67F–8215B–00	17 – 12
67F–8215B–10	17 – 8
67F–8215B–20	17 – 10
6CJ–82181–10	26 – 5
63P–82310–01	15 – 4
6C5–82316–01	15 – 10
6C5–82316–11	15 – 11
6A0–82317–00	8 – 7
	16 – 11
6CJ–82340–00	15 – 5
6C5–82388–10	15 – 20
64J–82504–00	15 – 22
6Y8–82509–10	33 – 8
6Y8–82521–11	33 – 15
6CJ–8253B–00	15 – 18
6CJ–82554–00	17 – 17
69J–82563–01	17 – 1
68F–82582–00	18 – 17
6DA–82582–00	17 – 13
6DA–82582–10	17 – 14
69J–82587–00	17 – 5
6CJ–82588–00	15 – 17
61A–82588–01	17 – 18
6CJ–82590–12	17 – 6
60V–8259F–00	17 – 16
6C5–825E0–00	34 – 1
6X4–83383–00	33 – 5

PART NO. N° PIECES	REF. NO.
6X4–83386–00	33 – 6
6E5–83558–00	24 – 38
6E5–83558–10	29 – 20
6CJ–83559–00	15 – 26
6BG–83614–00	17 – 2
62Y–83626–00	14 – 21
63D–83672–11	24 – 29
68F–83688–00	7 – 16
6Y8–8454G–00	33 – 11
69L–85516–00	10 – 27
6C5–85525–00	15 – 1
6CJ–85525–00	18 – 9
6CJ–85548–00	16 – 7
6C5–85561–00	14 – 14
62Y–85580–00	14 – 17
6CJ–85780–00	16 – 23
6CJ–85790–00	16 – 21
6C5–85885–00	7 – 6
6CJ–8591A–12	15 – 15
6BG–86112–10	8 – 13
6C5–86120–00	8 – 11
6Y8–86260–03	33 – 2
6AA–86261–01	33 – 3
6Y8–86267–00	33 – 1
6C5–87226–00	10 – 11
6CJ–W0001–01	35 – 1
6CJ–W0001–21	36 – 1
6CJ–W0078–00	1 – 17
	36 – 22
6CJ–W009A–01–9S	5 – 1
6CJ–W009B–03–9S	3 – 1
90101–06020	23 – 7
	23 – 9
	23 – 26
90101–06054	22 – 10
90101–09M01	32 – 7
90101–12M65	23 – 36
90105–09009	5 – 12
90105–10M67	30 – 12
90109–06047	2 – 7
90109–06M65	5 – 8
90109–06M80	20 – 29
90109–06M86	17 – 4
	17 – 23
	17 – 26
	20 – 13
	20 – 22
	20 – 33

NUMERICAL INDEX
INDEX NUMERIQUE

PART NO. N° PIECES	REF. NO.
90109–06M86	20 – 36
	20 – 38
	21 – 18
	21 – 20
	21 – 23
90109–06M88	34 – 2
90109–08229	24 – 11
90109–12MA3	24 – 24
90116–10063	24 – 7
90116–10M53	27 – 28
90119–06025	12 – 13
90119–06087	8 – 3
90119–06126	8 – 9
	22 – 29
90119–06261	27 – 7
90119–06M59	16 – 10
90119–06M61	8 – 10
	20 – 3
90119–06MA5	3 – 16
90119–06MA6	5 – 13
90119–08069	8 – 2
90119–08094	24 – 22
90119–08102	27 – 15
90119–08132	27 – 16
90119–08154	3 – 4
90119–08M00	27 – 27
90119–08M14	29 – 38
	36 – 36
90119–08M33	29 – 37
	36 – 35
90119–08M84	30 – 6
90119–10054	23 – 34
90119–10068	30 – 5
90151–05M00	30 – 9
90157–05M16	31 – 6
90159–04005	16 – 4
90159–05059	34 – 4
90167–05009	15 – 27
90167–06M00	33 – 12
90170–09M03	32 – 5
90170–16M01	29 – 41
90170–20137	14 – 11
90171–16011	30 – 16
90179–08003	18 – 16
90179–08M34	18 – 4
90179–35001	12 – 9
90183–02M03	29 – 52
90185–05002	30 – 10

PART NO. N° PIECES	REF. NO.
90185–06M05	2 – 8
90185–08018	24 – 13
90185–09M01	32 – 4
90185–10027	24 – 8
90185–22M11	23 – 14
90201–03313	29 – 50
90201–06M30	33 – 13
90201–10049	24 – 41
90201–10060	23 – 35
90201–10144	12 – 5
90201–10M20	22 – 14
	32 – 3
90201–10M63	32 – 8
90201–12062	23 – 37
90201–12426	23 – 38
90201–12M07	20 – 18
90201–12M16	24 – 18
90201–13M19	24 – 27
90201–16014	6 – 17
90201–186F1	3 – 24
	35 – 12
90201–21M18	14 – 12
90201–22M05	24 – 28
90201–25M05	29 – 68
90201–30M00	24 – 2
90202–07M07	22 – 18
90202–21100	24 – 26
90206–10M04	22 – 32
90206–12052	20 – 17
90249–06M19	23 – 21
90250–07M02	29 – 53
90280–03017	12 – 10
90280–03M03	29 – 28
	36 – 28
90282–04010	29 – 64
90340–08002	29 – 9
90340–14M06	3 – 25
	28 – 6
90340–18M09	3 – 23
90344–51003	3 – 6
90386–10025	23 – 18
90386–10M16	23 – 17
90386–12M37	20 – 15
90386–12MA2	20 – 16
90386–18M35	23 – 29
90386–18M92	23 – 28
90386–22MA4	23 – 13
90386–30M60	24 – 6

PART NO. N° PIECES	REF. NO.
90386–30M77	24 – 4
90386–30M78	24 – 3
90386–90M90	22 – 13
90387–04001	17 – 19
90387–05004	34 – 5
90387–06119	8 – 8
	16 – 9
90387–06279	22 – 33
90387–06285	14 – 3
90387–06M03	10 – 26
90387–06M43	20 – 31
90387–06M45	22 – 28
90387–06M69	20 – 5
90387–10M42	32 – 6
90389–25M00	30 – 15
90401–08011	6 – 18
90430–06014	5 – 9
	35 – 4
90430–08003	1 – 15
	29 – 11
	36 – 11
90430–14115	3 – 26
	16 – 22
	35 – 13
90430–14M09	1 – 14
	28 – 7
	36 – 3
90445–07M31	29 – 19
90445–07ME8	29 – 19
90445–09036	21 – 9
90445–09220	21 – 11
90445–09304	21 – 16
90445–096H2	21 – 12
90445–133F0	13 – 5
90446–13M11	13 – 8
90446–15006	13 – 12
90447–19009	24 – 39
90450–50001	8 – 6
90462–08067	21 – 17
90462–20005	20 – 32
90464–06001	15 – 12
90464–07M05	15 – 7
90464–07M41	15 – 6
90464–07M56	7 – 11
90464–09130	21 – 22
90464–09M49	20 – 34
90464–12004	13 – 7
90464–12006	9 – 9

PART NO. N° PIECES	REF. NO.
90464–12012	13 – 20
90464–12183	17 – 25
90464–13013	15 – 8
90464–13227	13 – 9
90464–14010	13 – 13
90464–15007	9 – 10
	9 – 11
90464–15008	9 – 8
	17 – 27
90464–16017	13 – 10
90464–18004	17 – 15
90464–18205	17 – 22
90464–18246	15 – 3
90464–20181	18 – 10
90464–30003	18 – 18
90464–76001	24 – 31
90465–08M83	11 – 24
90465–08M89	17 – 3
90465–11M10	8 – 15
	9 – 6
	11 – 17
	13 – 6
	20 – 35
	21 – 4
	21 – 15
	24 – 32
	24 – 33
	24 – 37
	29 – 21
	33 – 10
	34 – 6
90465–11M59	28 – 5
90465–13M18	34 – 7
90465–13M24	15 – 25
90465–13M97	14 – 19
	16 – 6
90467–09M17	13 – 11
90467–10M04	13 – 38
90467–11M08	13 – 25
90468–18008	22 – 16
	22 – 19
	22 – 35
90480–06M19	14 – 5
90480–12314	5 – 22
	14 – 6
	15 – 24
90480–13M24	20 – 30
90480–15M31	14 – 4

PART NO. N° PIECES	REF. NO.
90501–12082	22 – 11
90501–12M48	29 – 49
90506–14M24	23 – 22
90506–18023	20 – 23
91318–03005	25 – 56
91318–03025	25 – 55
91318–05030	25 – 54
91318–05045	25 – 27
91380–05020	25 – 64
91490–16010	22 – 26
91490–20015	22 – 15
91490–30025	30 – 17
91690–30020	23 – 19
92903–08100	18 – 22
92990–06100	34 – 3
92990–08200	6 – 19
92990–10100	27 – 30
92995–10600	27 – 31
93101–23070	29 – 30
	36 – 15
	36 – 29
93101–25M03	29 – 63
	36 – 20
93101–35002	4 – 11
	35 – 8
93102–37M40	12 – 14
	35 – 2
93102–43004	4 – 10
	35 – 7
93103–18011	27 – 2
	36 – 5
93106–09014	29 – 16
	36 – 13
93210–04279	33 – 9
93210–04N51	25 – 46
93210–064A5	25 – 41
93210–07003	29 – 55
	36 – 21
93210–09165	25 – 60
93210–12790	28 – 9
	36 – 4
93210–13M63	5 – 7
	35 – 3
93210–16275	32 – 10
93210–24M79	5 – 24
	13 – 36
	35 – 15
	35 – 16

PART NO. N° PIECES	REF. NO.
93210–29M94	24 – 5
93210–33003	9 – 4
93210–44006	25 – 10
93210–46044	29 – 32
	36 – 16
	36 – 30
93210–49001	25 – 6
93210–49046	29 – 15
	36 – 12
93210–64488	25 – 63
93210–86M39	29 – 61
	36 – 19
93306–207U0	29 – 59
93315–52563	29 – 3
93317–322V0	29 – 43
93317–325U0	29 – 62
93332–00095	29 – 8
93332–000U3	29 – 6
93410–18M05	23 – 30
93410–28M06	24 – 9
93420–36M01	27 – 19
93450–17129	4 – 9
93450–40165	29 – 31
93501–04M02	22 – 12
93501–08001	25 – 43
93503–16003	25 – 14
	29 – 51
93505–32038	25 – 38
93604–10M03	3 – 9
	27 – 10
	29 – 36
	36 – 34
93604–26256	25 – 53
93605–17002	12 – 3
93606–12019	3 – 3
	27 – 21
	27 – 26
	28 – 3
	30 – 4
93606–19002	23 – 2
93608–12M05	8 – 1
	27 – 3
93700–06002	23 – 11
94702–00429	1 – 6
	5 – 25
95023–06030	14 – 13
	14 – 15
95333–08600	18 – 21

PART NO. N° PIECES	REF. NO.
95380–05600	13 – 34
95380–05700	22 – 23
95380–05800	2 – 4
95380–06600	8 – 12
	20 – 27
95380–08600	13 – 23
95380–10600	27 – 29
95380–12600	23 – 39
	24 – 25
95680–08330	18 – 3
95780–06300	33 – 14
95812–06025	28 – 11
95817–10035	12 – 4
95D95–06020	14 – 2
95D95–06045	22 – 31
95D95–08016	13 – 22
97513–06535	3 – 5
97513–08545	18 – 14
97595–05512	3 – 21
	14 – 18
97595–05514	22 – 7
97602–04316	26 – 9
97607–04210	5 – 16
97780–60520	21 – 7
97780–60620	16 – 2
	16 – 8
	16 – 20
	33 – 7
97880–06035	33 – 12
97885–06008	23 – 5
	24 – 35
97980–05214	9 – 2
97980–06216	33 – 4
97980–06325	20 – 28
97985–04116	17 – 20
97985–06216	24 – 30
97D95–06010	23 – 23
97D95–06014	20 – 20
97E75–06520	27 – 25
97E75–06525	27 – 13
97E75–08530	24 – 16
97E75–10545	27 – 20
97E95–06514	8 – 19
	15 – 2
	15 – 21
97E95–06516	8 – 14
	8 – 17
	8 – 21
97E95–06516	15 – 16
	18 – 11
	18 – 12
	18 – 13
	18 – 20
	29 – 17
97E95–06520	3 – 22
	5 – 18
	5 – 20
	16 – 15
	18 – 8
	22 – 3
97E95–06525	13 – 2
	15 – 9
	15 – 14
	22 – 4
97E95–06530	13 – 37
97E95–06610	16 – 14
	16 – 17
97E95–08525	18 – 6
97E95–08535	18 – 5
98980–05025	5 – 5
99001–08600	29 – 56
99002–03600	25 – 34
99009–32500	25 – 21
99530–08012	5 – 11
	14 – 16
99530–10114	18 – 2