YAMAHA

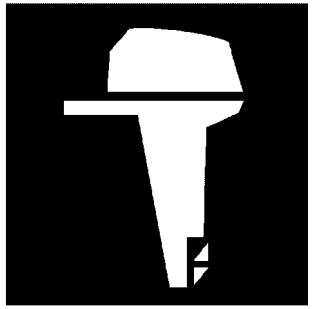

PARTS CATALOGUE
CATALOGUE DE PIECES DETACHEES

40V'20 (63BL/63CL)
50H'20 (62XY/63GL)

YAMAHA
GENUINE
Parts & Accessories

1U63B-300FA

( )

40V/50H
PARTS CATALOGUE
©2020 by Yamaha Motor Co., Ltd.
1st edition, May 2020
All rights reserved.
Any reprinting or unauthorized use
without the written permission of
Yamaha Motor Co., Ltd.
is expressly prohibited.
Printed in Japan.

40V/50H
CATALOGUE DE PIECES DETACHEES
©2020 par Yamaha Motor Co., Ltd.
1re édition, mai 2020
Tous droits réservés
Toute réimpression ou utilisation
non autorisée sans la permission écrite
de la Yamaha Motor Co., Ltd.
est formellement interdite.
Imprimé au Japon

FOREWORD

This Parts Catalogue is related to the parts for the model(s) on the cover page. When you are ordering replacement parts, please refer to this Parts Catalogue and quote both part numbers and part names correctly.

1. Modifications or additions which have been made after the issue of the Parts Catalogue will be announced in the Parts News.
   It is advisable that you make the necessary corrections to the Parts Catalogue according to the Parts News.

2. Abbreviations
   The following abbreviations are used in this Parts Catalogue.
   "UR" Use specified parts number.
   "UN" Use as many as needed.
   "AP" Alternate Parts
   "LM" Locally Made (Parts need to be ordered locally)
   "F#" Frame No. (Applicable machine No.)
   "O/S" Over Size

3. The number of components for assembly
   - Parts, which are to be supplied in an assembly, are listed with a dot (.) in front of the part name as shown below.
   - The numeral appearing to the right of each component part indicates the quantity of parts for each assembly unit.

PART NO.	DESCRIPTION	Q'TY	REMARKS
2F5–83310–60	FRONT FLASHER LIGHT ASSY	2	
115–83311–60	.BULB (6V–18W)	1	

4. Applicable colours of graphics are represented in the "REMARKS" as shown below.

PART NO.	DESCRIPTION	Q'TY	REMARKS
2N4–24110–00–X5	FUEL TANK COMP.	2	MXR
3J1–24240–10	.GRAPHIC, FUEL TANK	1	FOR MXR

5. Note that the illustrations for reference in finding parts numbers are not to be used for assembling. When assembling, please use the applicable service manual.

6. The asterisk (*) before a reference number indicates modified items after the first edition.

7. Applicable Serial No.
   Engine Serial No.

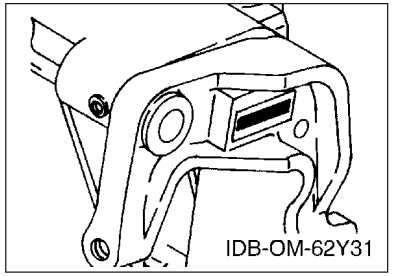

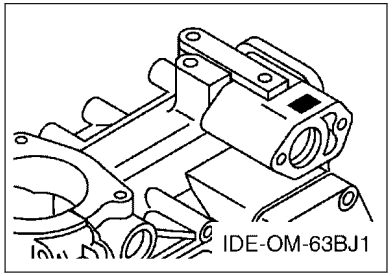

8. Applicable Engine Starting Serial No.

Model	Serial No.	Model	Serial No.
40V	6H4K-1029274	50H	6H5K-1035056

9. Applicable Colour Code

Abbreviation	Colour Name	Colour Code
DBN1	DARK BLUISH GRAY 1	008D

10. Quantity Column Information

Column No.	Name Of Q'ty Column	Applicable Model
1	ETO	50HETO
2	EO	40VEO
3	MHO	40VMHO, 50HMHO

AVANT–PROPOS

Ce catalogue de pièces détachées concerne les pièces pour le(s) modèle(s) indiqué(s) sur la page de couverture. Lorsque vous commandez des pièces de rechange, veuillez vous référer à ce catalogue de pieces détachées et indiquer clairement les numéros et les noms des pièces détachées.

1. Les modifications ou ajouts ayant été effectués après la parution du catalogue de pièces détachées seront décrits dans les Bulletins d'information concernant les pièces détachées.
   Il est recommandé que vous apportiez les corrections nécessaires au catalogue des pièces détachées en vous référant aux Bulletins d'information.

2. Abréviations
   Dans ce catalogue, les abréviations suivantes sont utilisées:
   "UR" Utiliser le numéro de pièces spécifié.
   "UN" Utiliser autant que nécessaire.
   "AP" Pièces de substitution
   "LM" Fabrication locale (les pièces doivent être commandées localement.)
   "F#" N° de cadre (applicable au N° de série)
   "O/S" Surdimensionné

3. Nombre de pièces d'un assemblage
   - Les pièces fournies comme composants d'un assemblage sont précédées d'un point (.) de la manière indiquée ci–dessous.
   - Le chiffre apparaissant à la droite de chaque composant indique la quantité de pièces pour chaque unité d'assemblage.

N° PIECES	DESCRIPTION	QTE	REMARQUES
2F5–83310–60	ENS. CLIGNOTANT AVANT	2	
115–83311–60	.AMPOULE (6V–18W)	1	

4. Les couleurs concernant les graphiques sont indiquées dans la colonne "REMARQUES", comme indiqué ci–dessous.

N° PIECES	DESCRIPTION	QTE	REMARQUES
2N4–24110–00–X5	RESERVOIR A ESSENCE.	2	MXR
3J1–24240–10	.GRAPHIQUE	1	POUR MXR

5. Veuillez noter que les illustrations sont indiquées à titre de référence pour trouver les numéros de pièces, non pour être utilisées lors de l'assemblage. Lors de l'assemblage, veuillez utiliser le manuel d'entretien adéquat.

6. L'astérisque (*) placé devant un numéro de référence indique des éléments qui ont été modifiés après la première édition.

7. N° de série applicable
   N° de Série du moteur

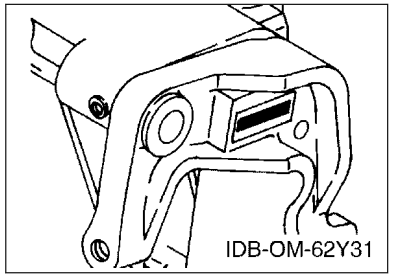

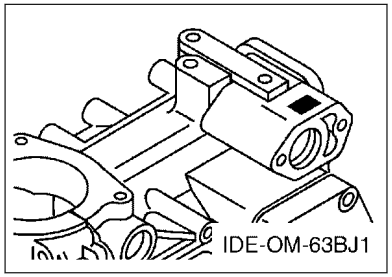

8. N° de série initial du moteur applicable

Modèle	N° de série	Modèle	N° de série
40V	6H4K-1029274	50H	6H5K-1035056

9. Code couleur applicable

Abréviation	Nom de la couleur	Code couleur
DBN1	DARK BLUISH GRAY 1	008D

10. Informations relatives à la colonne Quantité

N° de la colonne	Nom de la colonne Qté	Modèle applicable
1	ETO	50HETO
2	EO	40VEO
3	MHO	40VMHO, 50HMHO

CONTENTS

SCHEDULED SERVICE PARTS.....1
TOP COWLING.....2
CYLINDER & CRANKCASE.....4
CRANKSHAFT & PISTON.....6
INTAKE.....7
CARBURETOR.....9
OIL PUMP 1.....12
OIL PUMP 2.....14
FUEL.....16
STARTER.....18
GENERATOR.....20
ELECTRICAL 1.....21
ELECTRICAL 2.....22
ELECTRICAL 3.....24
STARTING MOTOR.....25
BOTTOM COWLING.....27
STEERING 1.....29
STEERING 2.....32
CONTROL.....33
BRACKET 1.....35
BRACKET 2.....37
BRACKET 3.....38
BRACKET 4.....40
BRACKET 5.....42
POWER TRIM & TILT ASSY 1.....44
POWER TRIM & TILT ASSY 2.....47
UPPER CASING.....48
LOWER CASING & DRIVE 1.....49
LOWER CASING & DRIVE 2.....53
FUEL TANK 1.....55
FUEL TANK 2.....56
STEERING GUIDE.....57
REMOTE CONTROL BOX.....58
REMOTE CONTROL ASSY 1.....59
REMOTE CONTROL ASSY 2.....62
METER.....65
OPTIONAL PARTS.....66
REPAIR KIT 1.....67
REPAIR KIT 2.....69

INDEX

NUMERICAL INDEX.....70

TABLE DES MATIERES

PIECES MAINTENANCE PERIODIQUE.....1
CAPOT SUPERIEUR..... 2
CYLINDRE & CARTER..... 4
VILEBREQUIN & PISTON.....6
ADMISSION.....7
CARBURATEUR..... 9
POMPE A HUILE 1.....12
POMPE A HUILE 2.....14
CARBURANT..... 16
DEMARREUR.....18
GENERATRICE.....20
PARTIE ELECTRIQUE 1.....21
PARTIE ELECTRIQUE 2.....22
PARTIE ELECTRIQUE 3.....24
DEMARREUR ELECTRIQUE.....25
CAPOT INFERIEUR.....27
DIRECTION 1.....29
DIRECTION 2.....32
COMMANDE..... 33
SUPPORT 1..... 35
SUPPORT 2..... 37
SUPPORT 3..... 38
SUPPORT 4..... 40
SUPPORT 5..... 42
PUISSANCE PARER ET INCLINER 1..... 44
PUISSANCE PARER ET INCLINER 2..... 47
FOURREAU.....48
BOITIER D'HELICE TRANSMISSION1.....49
BOITIER D'HELICE TRANSMISSION2.....53
RESERVOIR A CARBURANT 1.....55
RESERVOIR A CARBURANT 2.....56
FIXATION DE DIRECTION..... 57
BOITIER DE COMMANDE A DISTANCE..... 58
BOITIER DE COMMANDE A DISTANCE..... 59
BOITIER DE COMMANDE A DISTANCE..... 62
COMPTEUR..... 65
PIECES OPTIONNELLES.....66
KITS DE REPARATION 1..... 67
KITS DE REPARATION 2..... 69

INDEX

INDEX NUMERIQUE.....70

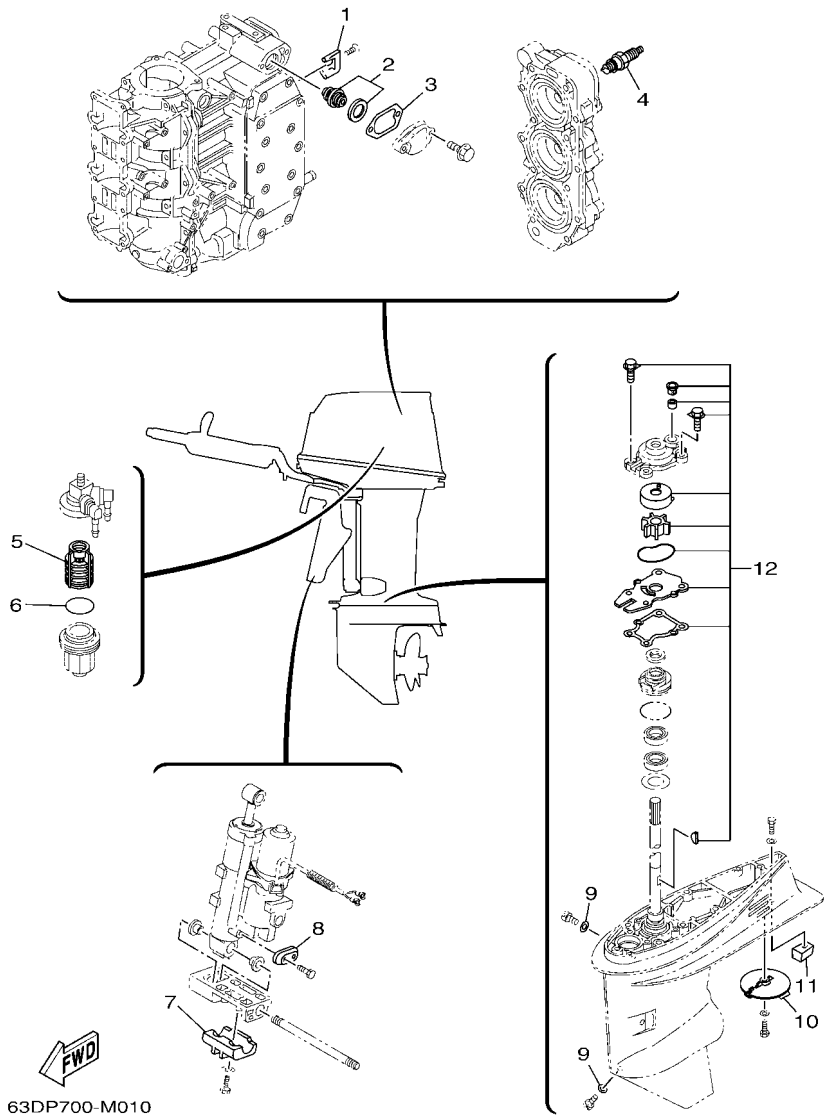

FIG. 1 SCHEDULED SERVICE PARTS — PIECES MAINTENANCE PERIODIQUE

REF. NO.	PART NO. N° PIECES	DESCRIPTION DESCRIPTION	ETO	EO	MHO			REMARKS REMARQUES
1	688–11325–00	ANODE ANODE	2	2	2			
2	6E5–12411–30	THERMOSTAT THERMOSTAT	1	1	1			
3	6J8–12414–A0	GASKET, COVER JOINT, COUVERCLE	1	1	1			
4	94702–00247	PLUG, SPARK (NGK BR8HS-10) BOUGIE D'ALLUMAGE(NGK BR8HS-10	3		3			50H 50H
	94702–00271	PLUG, SPARK (NGK BR7HS-10) BOUGIE D'ALLUMAGE(NGK BR7HS-10		3	3			40V 40V
5	61N–24563–00	ELEMENT, FILTER ELEMENT, FILTRE	1	1	1			
6	93210–32738	O-RING JOINT TORIQUE	1	1	1			
7	63D–45251–01	ANODE ANODE	1					
8	65W–45251–00	ANODE ANODE	1					
9	90430–08003	GASKET JOINT	2	2	2			
10	664–45371–01	TAB-TRIM ANODE DERIVE	1	1	1			
11	67C–45251–00	ANODE ANODE	1	1	1			
12	63D–W0078–02	WATER PUMP REPAIR KIT KIT DE REPARATION DE LA POMPE	1	1	1			

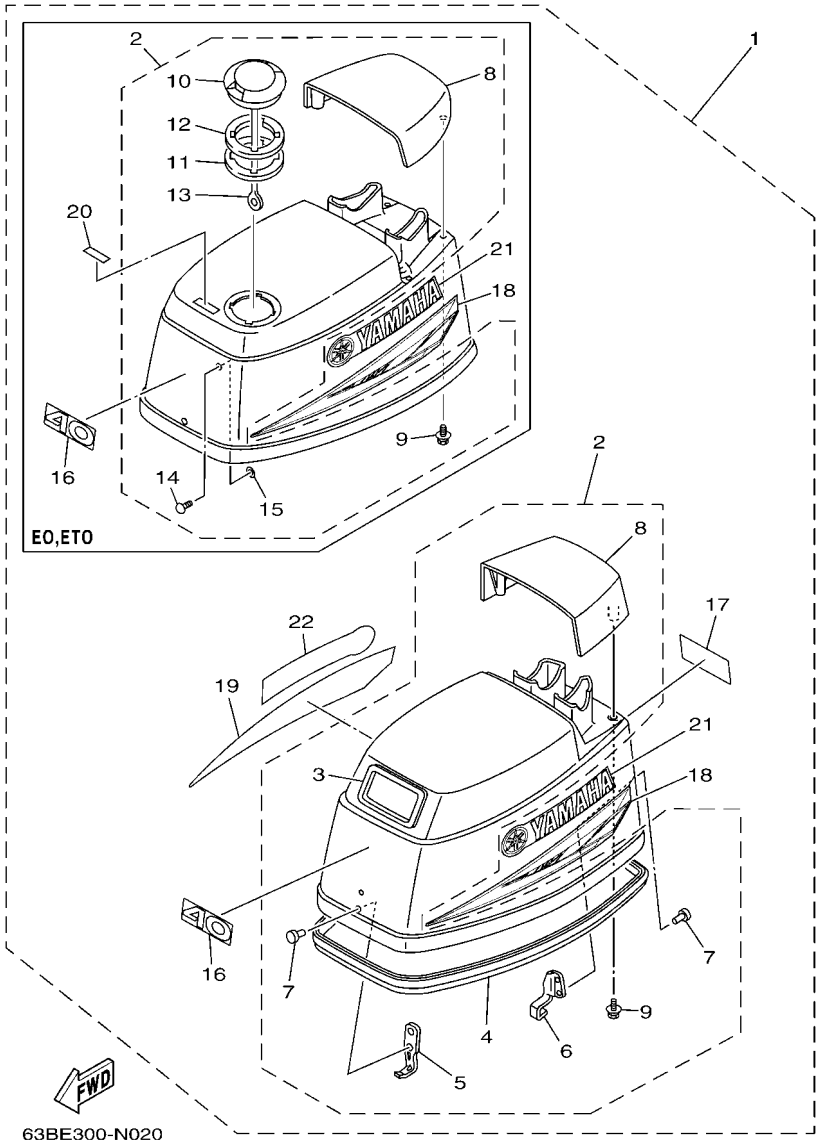

FIG. 2 TOP COWLING — CAPOT SUPERIEUR

REF. NO.	PART NO. N° PIECES	DESCRIPTION DESCRIPTION	ETO	EO	MHO			REMARKS REMARQUES
1	62X–42610–71	TOP COWLING ASSY CAPOT (ENS.)	1					50HETO 50HETO
	62X–42610–01	TOP COWLING ASSY CAPOT (ENS.)			1			50HMHO 50HMHO
	63D–42610–81	TOP COWLING ASSY CAPOT (ENS.)		1				40VEO 40VEO
	63D–42610–71	TOP COWLING ASSY CAPOT (ENS.)			1			40VMHO 40VMHO
2	6H4–4261A–11	.TOP COWLING W/O GRAPHICS .CAPOT SUPERIEUR SANS GRAPHIQUE	1	1				
	6H4–4261A–01	.TOP COWLING W/O GRAPHICS .CAPOT SUPERIEUR SANS GRAPHIQUE			1			
3	6H4–15761–00	..SEAL, RUBBER 1 ..JOINT CAOUTCHOUC 1			1			
4	6H4–42615–00	..SEAL ..JOINT	1	1	1			
5	6H4–42651–00	..HOOK ..CROCHET	1	1	1			
6	6H4–42652–00	..HOOK ..CROCHET	1	1	1			
7	90266–04M01	..RIVET ..RIVET	4	4	4			
8	6H4–42613–11–8D	..MOLDING, AIR DUCT ..MANCHON A AIR	1	1				
	6H4–42613–01–8D	..MOLDING, AIR DUCT ..MANCHON A AIR			1			
9	90119–06277	..BOLT, WITH WASHER ..BOULON, AVEC RONDELLE	4	4	4			
10	63D–2177H–00	..DISK CAP 2 ..BOUCHON DE DISQUE 2	1	1				
11	6H3–21732–00	..SEAL 1 ..JOINT 1	1	1				
12	6H3–21735–00	..SEAL 2 ..JOINT 2	1	1				
13	6H1–42694–00	..BAND ..COLLIER	1	1				
14	90338–05M03	..PLUG ..PLOT	1	1				
15	90183–05M06	..NUT, SPRING ..ECROU, RESSORT	1	1				
16	62X–42678–40	.GRAPHIC, REAR .ADHESIF, ARRIERE	1		1			50H 50H
	63D–42678–40	.GRAPHIC, REAR .ADHESIF, ARRIERE		1	1			40V 40V
17	62X–42678–40	.GRAPHIC, REAR .ADHESIF, ARRIERE	1		1			50H 50H
	63D–42678–40	.GRAPHIC, REAR .ADHESIF, ARRIERE		1	1			40V 40V
18	688–42675–50	.GRAPHIC, SIDE 1 .EMBLEME	1	1	1			
19	688–42676–50	.GRAPHIC, SIDE 2 .EMBLEME	1	1	1			
20	63D–13436–40	.MARK .ADHESIF	1	1				

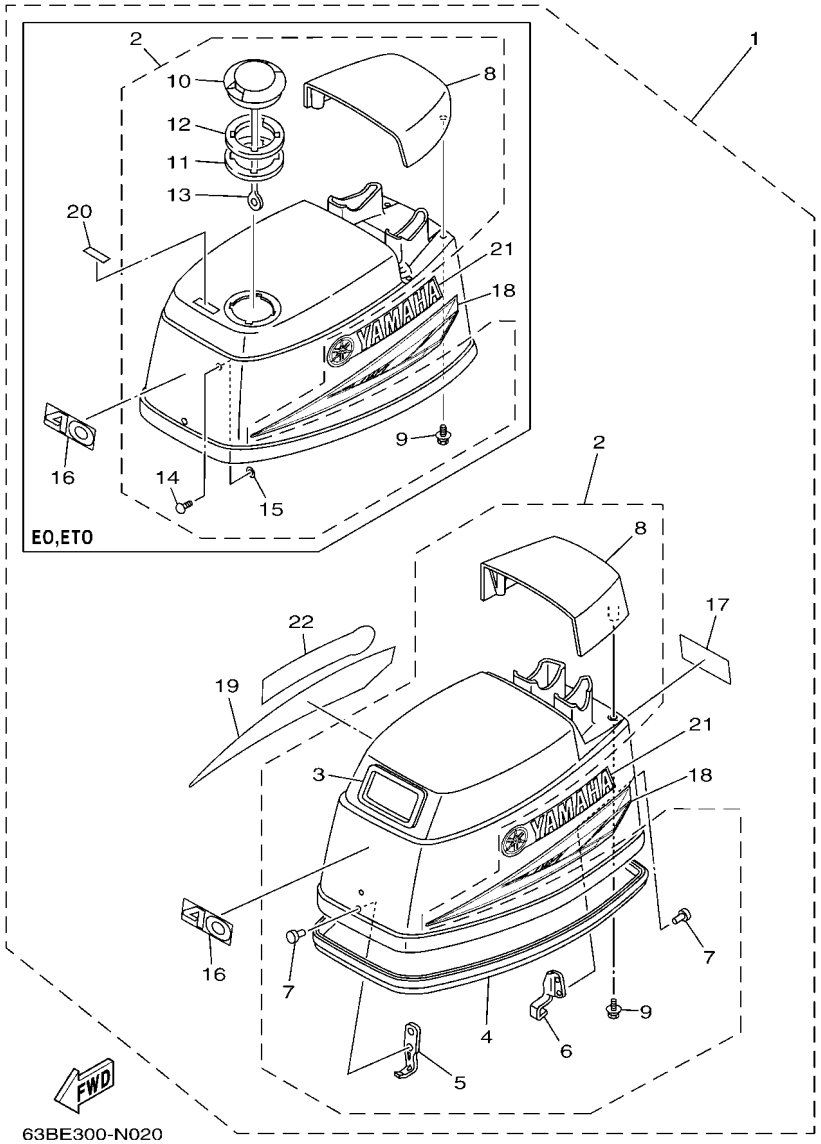

FIG. 2 TOP COWLING — CAPOT SUPERIEUR

REF. NO.	PART NO. N° PIECES	DESCRIPTION DESCRIPTION	ETO	EO	MHO			REMARKS REMARQUES
21	63D–42681–40	.MARK, COWLING .ADHESIF, CAPOT	1	1	1			
22	63D–42681–40	.MARK, COWLING .ADHESIF, CAPOT	1	1	1			

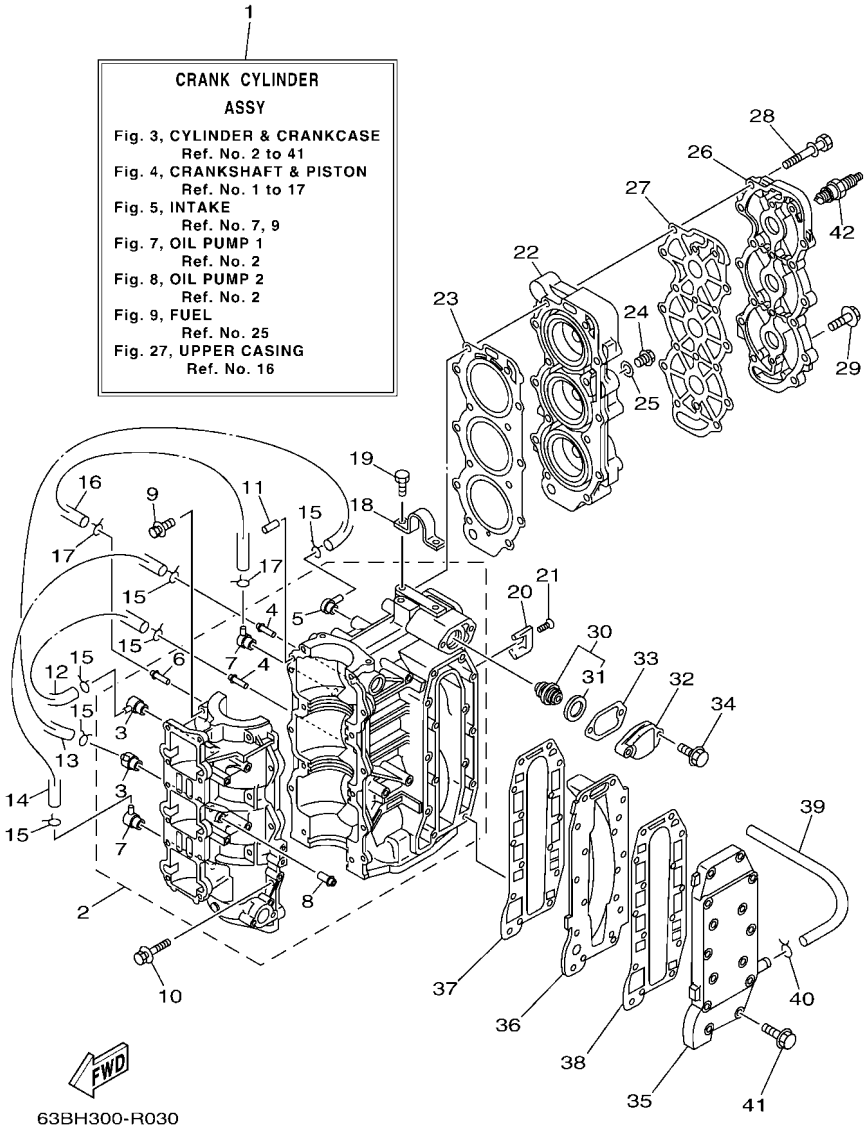

FIG. 3 CYLINDER & CRANKCASE — CYLINDRE & CARTER

REF. NO.	PART NO. N° PIECES	DESCRIPTION DESCRIPTION	ETO	EO	MHO			REMARKS REMARQUES
1	63D–W0090–13–1S	CRANK CYLINDER ASSY EMBIELLAGE CYLINDRE (ENS.)	1	1				E-O/I E-O/I
	63D–W0090–33–1S	CRANK CYLINDER ASSY EMBIELLAGE CYLINDRE (ENS.)			1			M-O/I M-O/I
2	6H4–15100–13	CRANKCASE ASSY CARTER DE MOTEUR COMPLET	1	1				E-O/I E-O/I
	6H4–15100–30	CRANKCASE ASSY CARTER DE MOTEUR COMPLET			1			M-O/I M-O/I
3	650–11370–01	.CHECK VALVE ASSY .CLAPET (ENS.)	2	2	2			
4	624–14485–00	.PIPE, JOINT .DURITE	2	2	2			
5	6H4–11372–01	.NIPPLE, HOSE .RACCORD, TUYAU	1	1	1			
6	624–14485–00	.PIPE, JOINT .DURITE	1	1	1			
7	688–11370–01	.CHECK VALVE ASSY .CLAPET (ENS.)	2	2	2			
8	650–24378–00	.PIPE, JOINT 4 .DURITE RACCORDEMENT 3	1	1				E-O/I E-O/I
9	90119–08019	BOLT, WITH WASHER BOULON, AVEC RONDELLE	8	8	8			
10	90119–06M13	BOLT, WITH WASHER BOULON, AVEC RONDELLE	6	6	6			
11	93606–12019	PIN, DOWEL GOUPILLE	2	2	2			
12	90445–07M46	HOSE (L360) DURITE (L360)	1	1	1			
13	90445–07M27	HOSE (L310) DURITE (L310)	1	1	1			
14	90445–07M24	HOSE (L240) DURITE (L240)	1	1	1			
15	90467–06016	CLIP JONC	6	6	6			
16	90445–07MA3	HOSE (L200) DURITE (L200)	1	1	1			
17	90467–06016	CLIP JONC	2	2	2			
18	6H4–11119–01	HANGER, ENGINE ANNEAU, LEVAGE	1	1	1			
19	90101–06021	BOLT BOULON	2	2	2			
20	688–11325–00	ANODE ANODE	2	2	2			
21	98780–04016	SCREW, FLAT HEAD VIS A TETE FRAISEE	2	2	2			
22	63D–11111–00–1S	HEAD, CYLINDER 1 CULASSE, 1	1	1	1			
23	63D–11181–A2	GASKET, CYLINDER HEAD 1 JOINT, DE CULASSE 1	1	1	1			
24	90340–14M06	PLUG, STRAIGHT SCREW PLOT, FILETE DROIT	1	1	1			
25	90430–14115	GASKET JOINT	1	1	1			

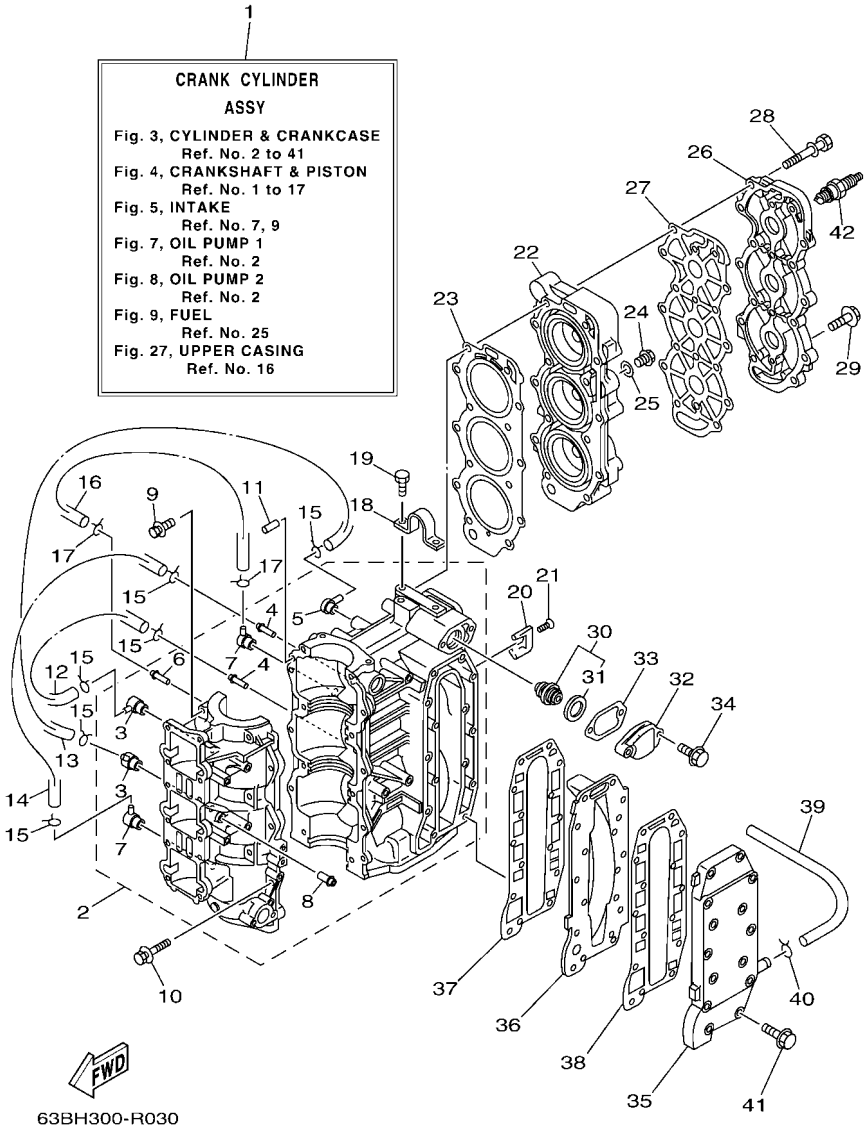

FIG. 3 CYLINDER & CRANKCASE — CYLINDRE & CARTER

REF. NO.	PART NO. N° PIECES	DESCRIPTION DESCRIPTION	ETO	EO	MHO			REMARKS REMARQUES
26	63D–11191–00–1S	COVER, CYLINDER HEAD 1 COUVERCLE, CULASSE 1	1	1	1			
27	63D–11193–A0	GASKET, HEAD COVER 1 JOINT, COUVERCLE DE CULASSE 1	1	1	1			
28	90119–08015	BOLT, WITH WASHER BOULON, AVEC RONDELLE	14	14	14			
29	90119–06MA3	BOLT, WITH WASHER BOULON, AVEC RONDELLE	4	4	4			
30	6E5–12411–30	THERMOSTAT THERMOSTAT	1	1	1			
31	688–12412–00	.SEAL, THERMOSTAT .JOINT, THERMOSTAT	1	1	1			
32	6H4–12413–00–1S	COVER, THERMOSTAT COUVERCLE, THERMOSTAT	1	1	1			
33	6J8–12414–A0	GASKET, COVER JOINT, COUVERCLE	1	1	1			
34	90119–06MA3	BOLT, WITH WASHER BOULON, AVEC RONDELLE	2	2	2			
35	6H4–41113–00–1S	OUTER COVER, EXHAUST COUVERCLE, ECHAPPEMENT	1	1	1			
36	6H4–41111–00–1S	INNER COVER, EXHAUST PLAQUE, ECHAPPEMENT	1	1	1			
37	6H4–41112–A0	GASKET, EXHAUST INNER COVER JOINT, PLAQUE D'ECHAPPEMENT	1	1	1			
38	6H4–41114–A0	GASKET, EXHAUST OUTER COVER JOINT, COUVERCLE D'ECHAPPEMENT	1	1	1			
39	90445–09M37	HOSE (L240) DURITE (L240)	1	1	1			
40	90467–08004	CLIP JONC	1	1	1			
41	90119–06MA5	BOLT, WITH WASHER BOULON, AVEC RONDELLE	13	13	13			
42	94702–00247	PLUG, SPARK (NGK BR8HS-10) BOUGIE D'ALLUMAGE(NGK BR8HS-10	3		3			50H 50H
	94702–00271	PLUG, SPARK (NGK BR7HS-10) BOUGIE D'ALLUMAGE(NGK BR7HS-10		3	3			40V 40V

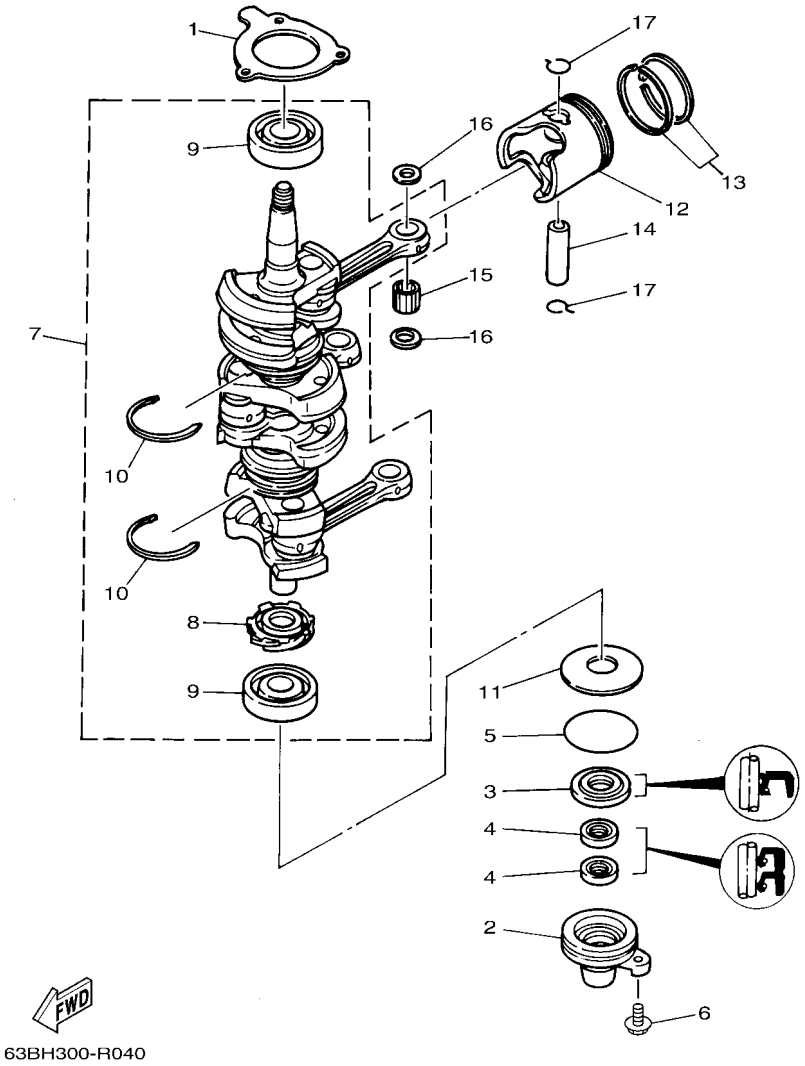

FIG. 4 CRANKSHAFT & PISTON — VILEBREQUIN & PISTON

REF. NO.	PART NO. N° PIECES	DESCRIPTION DESCRIPTION	ETO	EO	MHO			REMARKS REMARQUES
1	6H4–15369–A1	GASKET, OIL SEAL HOUSING JOINT SPY DE LOGEMENT	1	1	1			
2	6H4–15396–03–CA	HOUSING, OIL SEAL LOGEMENT DE JOINT SPY	1	1	1			
3	93102–25M28	OIL SEAL JOINT SPY	1	1	1			
4	93104–16M01	OIL SEAL JOINT SPY	2	2	2			
5	93210–56001	O-RING JOINT TORIQUE	1	1	1			
6	97E95–06520	BOLT, HEXAGON W/W DEEP RECESS VIS HEXAGONAL AVC RONDELLE	1	1	1			
7	6H4–11400–14	CRANKSHAFT ASSY VILEBREQUIN COMPLET	1	1	1			
8	6H4–11536–00	.GEAR, DRIVE .ENGRENAGE, MENANT	1	1	1			
9	93306–305U8	.BEARING .ROULEMENT	2	2	2			
10	93440–62057	.CIRCLIP .CIRCLIP	2	2	2			
11	90201–50306	WASHER, PLATE RONDELLE, PLATE	1	1	1			
12	6H4–11631–01–95	PISTON (STD) PISTON (STD)	3	3	3			
	6H4–11635–01	PISTON (0.25MM O/S) PISTON (0.25MM O/S)	3	3	3			AP AP
	6H4–11636–01	PISTON (0.50MM O/S) PISTON (0.50MM O/S)	3	3	3			AP AP
13	63D–11603–00	PISTON RING SET (STD) JEU DE SEGMENTS (STD)	3	3	3			
	63D–11604–00	PISTON RING SET (0.25MM O/S) JEU DE SEGMENTS (0.25MM O/S)	3	3	3			AP AP
	63D–11605–00	PISTON RING SET (0.50MM O/S) JEU DE SEGMENTS (0.50MM O/S)	3	3	3			AP AP
14	648–11633–00	PIN, PISTON AXE, PISTON	3	3	3			
15	93602–20M02	PIN, DOWEL GOUJON	93	93	93			
16	6H4–11641–00	WASHER, PISTON PIN RONDELLE, AXE DE PISTON	6	6	6			
17	6H4–11634–01	CLIP, PISTON PIN AGRAFE, AXE DE PISTON	6	6	6			

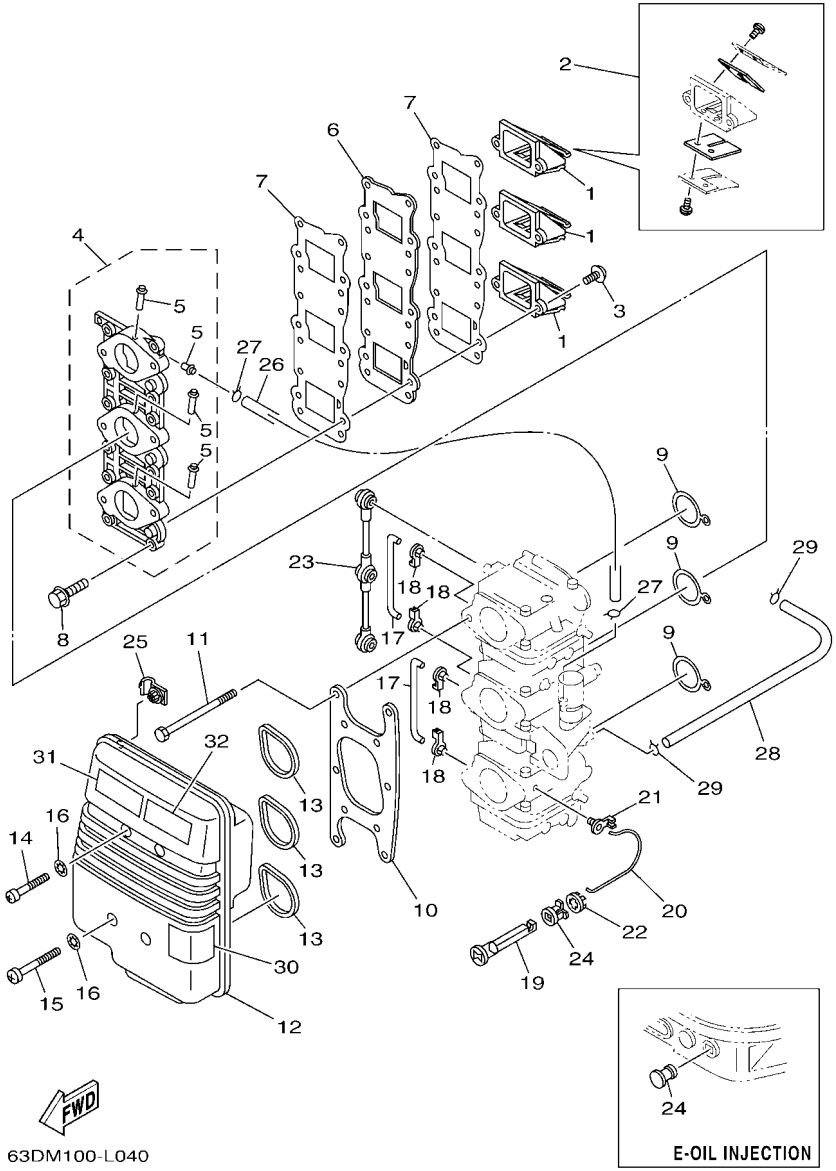

FIG. 5 INTAKE — ADMISSION

REF. NO.	PART NO. N° PIECES	DESCRIPTION DESCRIPTION	ETO	EO	MHO			REMARKS REMARQUES
1	6H5–13610–00	REED VALVE ASSY CLAPET COMPLET	3	3	3			
2	6H4–W0004–00	.REED SET .JEU DE CLAPETS	1	1	1			
3	97980–05214	SCREW, WITH WASHER VIS, AVEC RONDELLE	6	6	6			
4	6H4–13641–12	MANIFOLD, INTAKE 1 TUBULURE, ADMISSION 1	1	1				E-O/I E-O/I
	6H4–13641–30	MANIFOLD, INTAKE 1 TUBULURE, ADMISSION 1			1			M-O/I M-O/I
5	6H1–14485–00	.PIPE, JOINT .DURITE	4	4				FOR 6H4-13641-12 FOR 6H4-13641-12
	6H1–14485–00	.PIPE, JOINT .DURITE			3			FOR 6H4-13641-30 FOR 6H4-13641-30
6	6H4–13624–01	PLATE,REED VALVE PLAQUE DE CLAPET	1	1	1			
7	6H4–13621–A1	GASKET, VALVE SEAT JOINT, SIEGE DE CLAPET	2	2	2			
8	90119–06MA2	BOLT, WITH WASHER BOULON, AVEC RONDELLE	12	12	12			
9	6H4–14198–01	GASKET JOINT	3	3	3			
10	6H4–14406–00	HINGE PENTURE	1	1	1			
11	97D95–06095	BOLT, HEXAGON DEEP RECESS VIS HEXAGONAL	6	6	6			
12	6H4–14431–02	SILENCER, INTAKE 1 SILENCIEUX, ADMISSION	1	1				
	6H4–14431–13	SILENCER, INTAKE 1 SILENCIEUX, ADMISSION			1			
13	6H3–14457–01	SEAL JOINT	3	3	3			
14	97885–06040	SCREW, PAN HEAD VIS, A ENCOCHE	2	2	2			
15	97885–06055	SCREW, PAN HEAD VIS, A ENCOCHE	2	2	2			
16	90209–06M05	WASHER RONDELLE	4	4	4			
17	6H4–41257–00	ROD, CHOKE 2 TRINGLE 2, STARTER			2			
18	661–41262–02	JOINT, CHOKE LEVER RACCORD, LEVIER DE STARTER			4			
19	6H4–41271–02	KNOB, CHOKE BOUTON DE STARTER			1			
20	6H4–41259–01	ROD, CHOKE 3 TRINGLE 3, STARTER			1			
21	6J8–41262–00	JOINT, CHOKE LEVER RACCORD, LEVIER DE STARTER			1			
22	6J8–41274–00	GROMMET 2 PASSE-FIL 2			1			
23	6H4–41217–01	ROD, ACCEL. LEVER TIGE, LEVIER ACCELERATION	1	1	1			
24	6G1–42748–00	GROMMET PASSE-FIL	1	1				

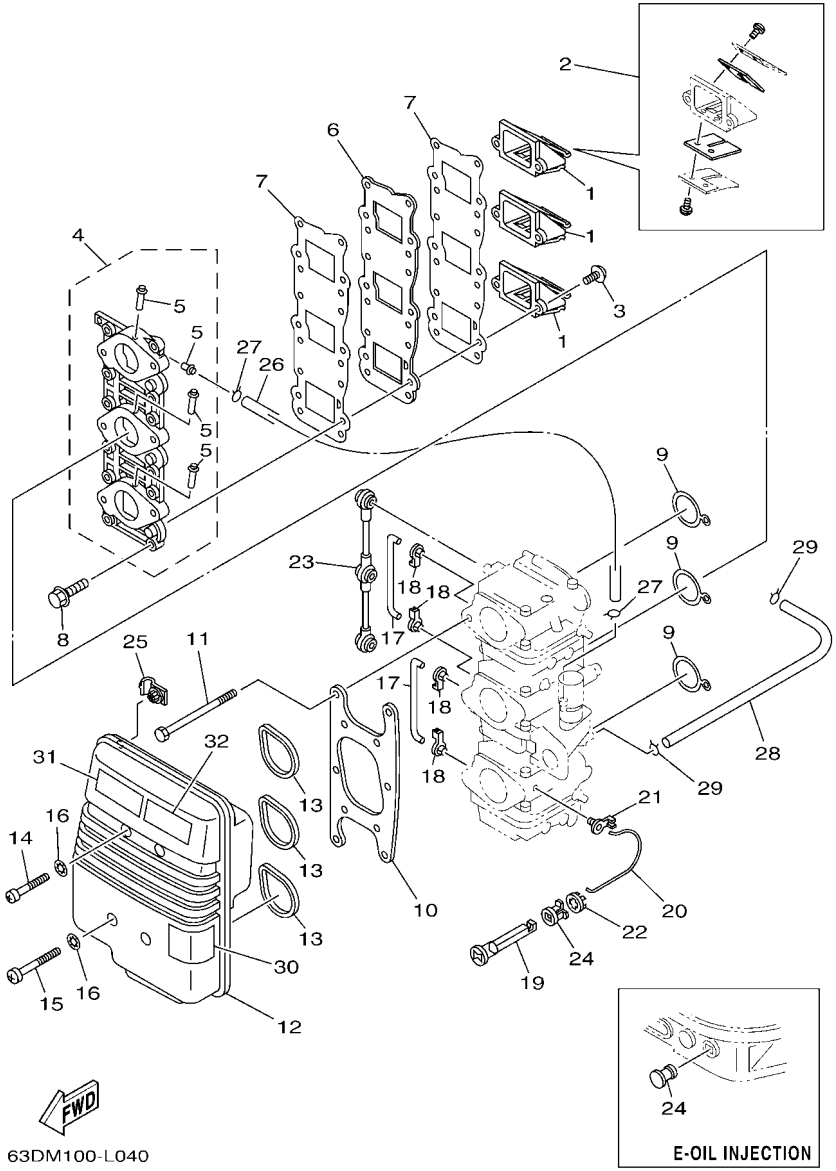

FIG. 5 INTAKE — ADMISSION

REF. NO.	PART NO. N° PIECES	DESCRIPTION DESCRIPTION	ETO	EO	MHO			REMARKS REMARQUES
24	689–41273–00	GROMMET PASSE-FIL			1			
25	90464–06M19	CLAMP BRIDE			1			
26	90445–07MA5	HOSE (L150) DURITE (L150)	1	1				
27	90467–06016	CLIP JONC	2	2				
28	6H3–14349–00	PIPE DURITE	1	1				
29	90467–08004	CLIP JONC	2	2				
30	6H1–85711–60	MARK, CAUTION MAKER	1	1				
31	6EE–81994–40	LABEL, SAFETY ETIQUETTE, SECURITE	1	1	1			
32	6EE–81994–50	LABEL, SAFETY ETIQUETTE, SECURITE	1	1	1			

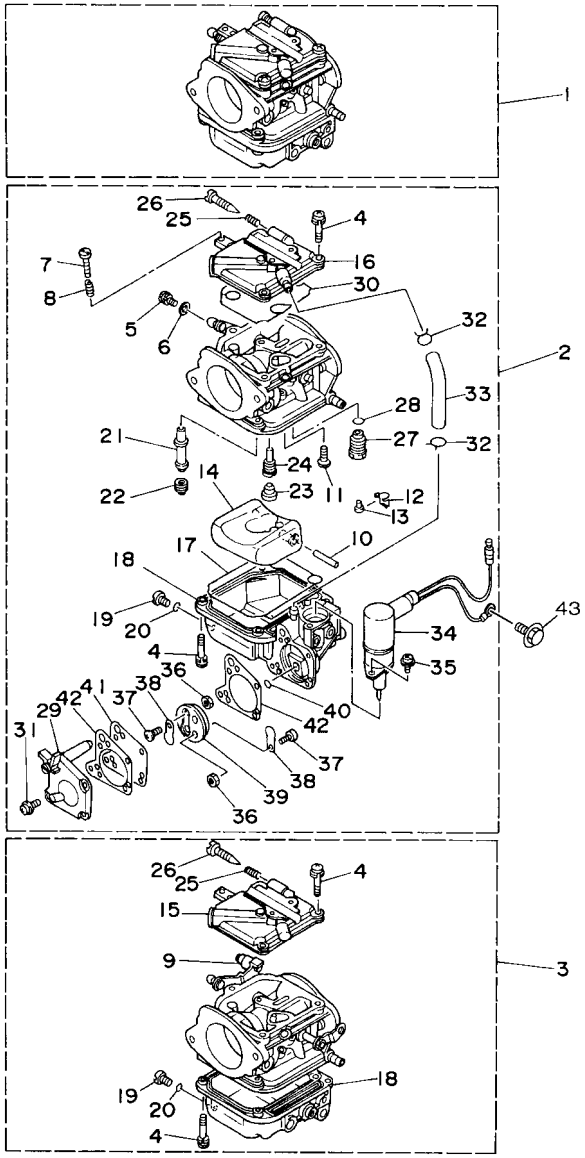

63BH300-R060

FIG. 6 CARBURETOR — CARBURATEUR

REF. NO.	PART NO. N° PIECES	DESCRIPTION DESCRIPTION	ETO	EO	MHO			REMARKS REMARQUES
1	62X–14301–00	CARBURETOR ASSY 1 CARBURATEUR COMPLET 1	1					50H 50H
	62W–14301–00	CARBURETOR ASSY 1 CARBURATEUR COMPLET 1			1			50H 50H
	63D–14301–00	CARBURETOR ASSY 1 CARBURATEUR COMPLET 1		1				40V 40V
	63B–14301–00	CARBURETOR ASSY 1 CARBURATEUR COMPLET 1			1			40V 40V
2	62X–14302–00	CARBURETOR ASSY 2 CARBURATEUR COMPLET 2	1					50H 50H
	62W–14302–00	CARBURETOR ASSY 2 CARBURATEUR COMPLET 2			1			50H 50H
	63D–14302–00	CARBURETOR ASSY 2 CARBURATEUR COMPLET 2		1				40V 40V
	63B–14302–00	CARBURETOR ASSY 2 CARBURATEUR COMPLET 2			1			40V 40V
3	62X–14303–00	CARBURETOR ASSY 3 CARBURATEUR COMPLET 3	1					50H 50H
	62W–14303–00	CARBURETOR ASSY 3 CARBURATEUR COMPLET 3			1			50H 50H
	63D–14303–00	CARBURETOR ASSY 3 CARBURATEUR COMPLET 3		1				40V 40V
	63B–14303–00	CARBURETOR ASSY 3 CARBURATEUR COMPLET 3			1			40V 40V
4	97980–04114	.SCREW, WITH WASHER .VIS, AVEC RONDELLE	21	21	21			
5	6K5–14592–00	.SCREW .VIS	3	3	3			
6	90201–05652	.WASHER, PLATE .RONDELLE, PLATE	3	3	3			
7	63V–14523–00	.SCREW, STOP .VIS, BUTEE	1	1	1			#2 #2
8	90501–10326	.SPRING, COMPRESSION .RESSORT, COMPRESSION	1	1	1			#2 #2
9	6H2–14578–00	.COLLAR .COLLERETTE	1	1	1			#3 #3
10	6H4–14548–00	.PIN, FLOAT ARM .AXE, BRAS DE FLOTTEUR	3	3	3			
11	98580–04008	.SCREW, PAN HEAD .VIS	3	3	3			
12	663–14159–00	.CLIP .JONC	3	3	3			
13	676–14186–00	.PIN, FLOAT .AXE, FLOTTEUR	3	3	3			
14	6H4–14985–01	.FLOAT .FLOTTEUR	3	3	3			
15	6H4–14146–10	.PLATE .PLAQUE	2	2	2			#1,3 #1,3
16	6H3–14146–10	.PLATE .PLAQUE	1	1				#2 #2
	6H4–14146–00	.PLATE .PLAQUE			1			#2 #2
17	6H4–14984–00	.GASKET, FLOAT CHAMBER .JOINT, CUVE DE FLOTTEUR	3	3	3			

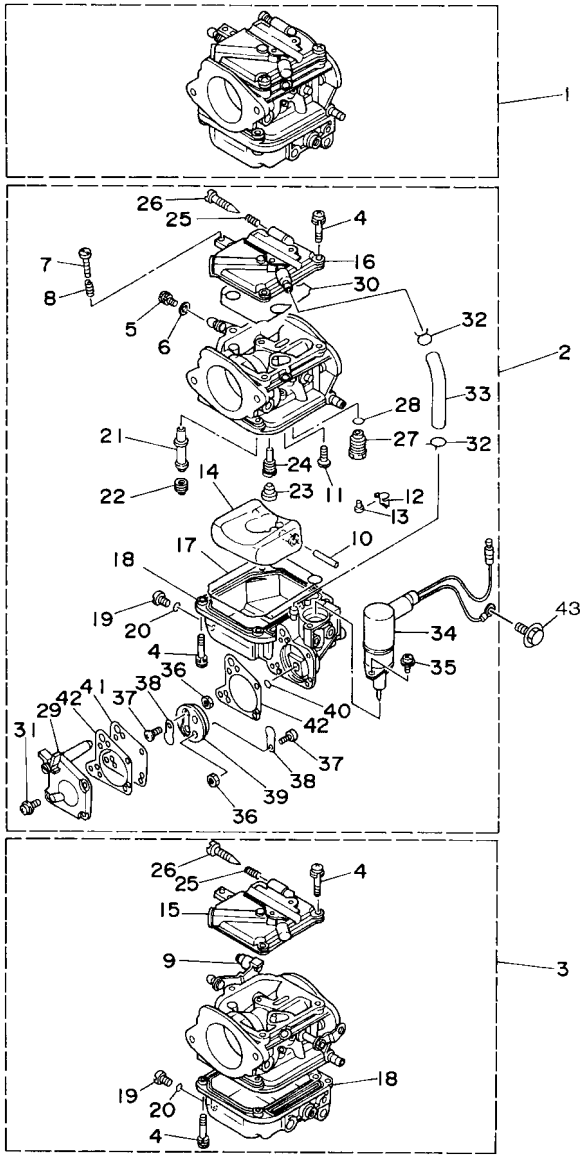

63BH300-R060

FIG. 6 CARBURETOR — CARBURATEUR

REF. NO.	PART NO. N° PIECES	DESCRIPTION DESCRIPTION	ETO	EO	MHO			REMARKS REMARQUES
18	6H4–14980–00	.BODY, FLOAT CHAMBER .CORPS, CUVE DE FLOTTEUR	2	2				#1,3 #1,3
	6H3–14980–10	.BODY, FLOAT CHAMBER .CORPS, CUVE DE FLOTTEUR	1	1				#2 #2
	6H4–14980–00	.BODY, FLOAT CHAMBER .CORPS, CUVE DE FLOTTEUR			3			
19	6H3–14992–00	.SCREW, DRAIN .BOUCHON, PURGE	3	3	3			
20	93210–04230	.O-RING .JOINT TORIQUE	3	3	3			
21	62X–14947–00	.JET, NEEDLE .GICLEUR DE STARTER	3					50H 50H
	62W–14947–00	.JET, NEEDLE .GICLEUR DE STARTER			3			50H 50H
	63D–14947–00	.JET, NEEDLE .GICLEUR DE STARTER		3	3			40V 40V
22	676–14943–33	.JET, MAIN (#130) .GICLEUR, PRINCIPAL (#130)	3					50H 50H
	676–14943–32	.JET, MAIN (#125) .GICLEUR, PRINCIPAL (#125)			3			50H 50H
	676–14943–30	.JET, MAIN (#115) .GICLEUR, PRINCIPAL (#115)		2	2			40V-#1,3 40V-#1,3
	63D–14943–81	.JET, MAIN (#118) .GICLEUR, PRINCIPAL (#118)		1	1			40V-#2 40V-#2
23	676–14966–00	.CAP .CAPUCHON	3	3	3			
24	6H4–14948–12	.JET (#62) .GICLEUR (#62)	3					50H 50H
	62X–14948–12	.JET (#62) .GICLEUR (#62)			3			50H 50H
	6H4–14948–11	.JET (#60) .GICLEUR (#60)		3	3			40V 40V
25	679–14555–00	.SPRING .RESSORT	3	3	3			
26	692–14923–00	.SCREW, PILOT .VIS, RALENTI	3	3	3			
27	6H4–14590–01	.NEEDLE VALVE ASSY .POINTEAU	3	3	3			
28	93210–04228	.O-RING .JOINT TORIQUE	3	3	3			
29	6H3–24452–10	.COVER .COUVERCLE	1	1				#2 #2
30	6H4–14147–00	.O-RING .JOINT TORIQUE	3	3	3			
31	6H4–14567–00	.SCREW .VIS	4	4				#2 #2
32	6H3–14137–00	.CLIP .JONC	2	2				#2 #2
33	6H3–14349–00	.PIPE .DURITE	1	1				#2 #2
34	63D–14380–00	.PRIME STARTER ASSY .STARTER AUTOMATIQUE	1	1				#2 #2
35	97803–04010	.SCREW, PAN HEAD .VIS, CRUCIFORME	2	2				#2 #2

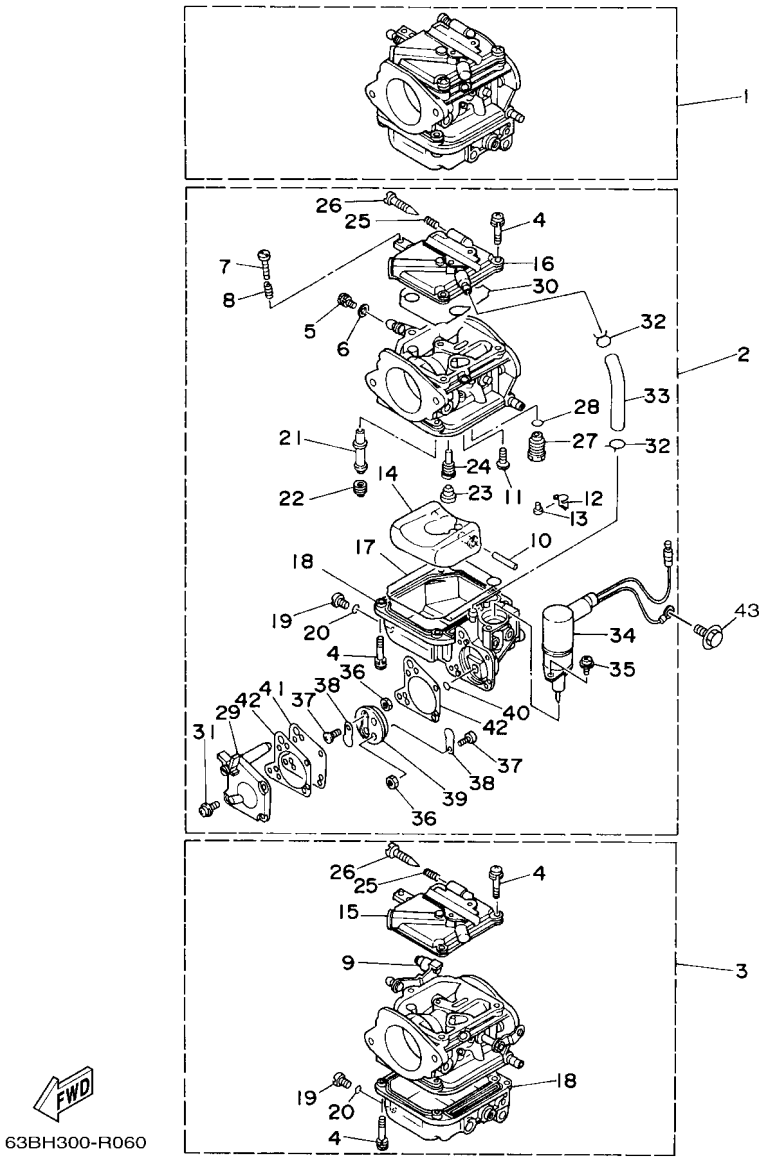

63BH300-R060

FIG. 6 CARBURETOR — CARBURATEUR

REF. NO.	PART NO. N° PIECES	DESCRIPTION DESCRIPTION	ETO	EO	MHO			REMARKS REMARQUES
36	95380–03600	.NUT .ECROU	2	2				#2 #2
37	98980–03006	.SCREW, BIND .VIS, DE PRESSION	2	2				#2 #2
38	6L5–24421–00	.VALVE, CHECK .SOUPAPE, RETENUE	2	2				#2 #2
39	6H4–24413–00	.BODY 2 .CORPS 2	1	1				#2 #2
40	6H4–24486–00	.O-RING .JOINT TORIQUE	1	1				#2 #2
41	6H3–24411–10	.DIAPHRAGM .DIAPHRAGME	1	1				#2 #2
42	6H3–24434–10	.GASKET, BODY .JOINT, CORPS	2	2				#2 #2
43	97513–06512	BOLT, WITH WASHER VIS HEXAGONAL AVC RONDELLE	1	1				

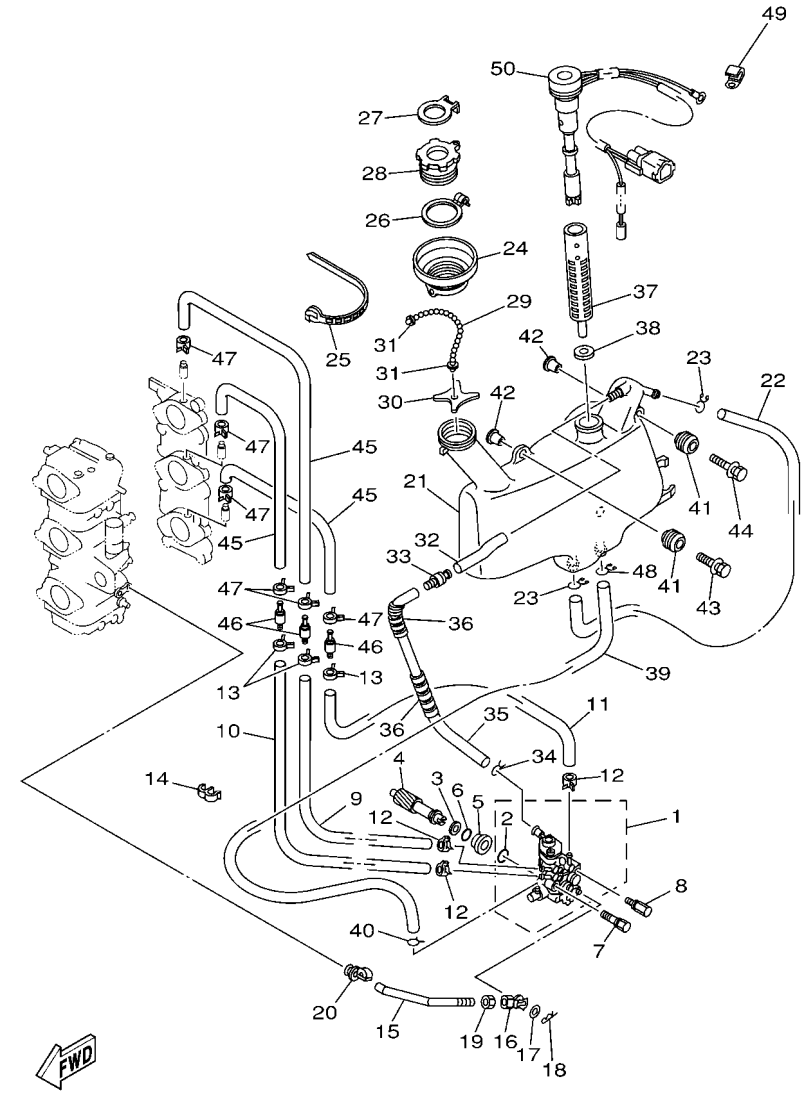

63B0100-0070

FIG. 7 OIL PUMP 1 — POMPE A HUILE 1

REF. NO.	PART NO. N° PIECES	DESCRIPTION DESCRIPTION	ETO	EO	MHO			REMARKS REMARQUES
1	63D–13200–00	OIL INJECTION PUMP ASSY POMPE A HUILE COMPLET	1	1				
2	93210–19MA7	.O-RING .JOINT TORIQUE	1	1				
3	90201–08M93	WASHER, PLATE RONDELLE, PLATE	1	1				
4	6H4–11537–01	GEAR, DRIVEN PIGNON SECONDAIRE	1	1				
5	6H1–13117–01	COLLAR, DISTANCE ENTRETOISE	1	1				
6	93210–13M04	O-RING JOINT TORIQUE	1	1				
7	90109–06M39	BOLT BOULON	1	1				
8	90109–06M40	BOLT BOULON	1	1				
9	90445–07M44	HOSE (L250) DURITE (L250)	1	1				
10	90445–07M23	HOSE (L180) DURITE (L180)	1	1				
11	90445–07MA6	HOSE (L90) DURITE (L90)	1	1				
12	90468–07M02	CLIP JONC	3	3				
13	90468–07M02	CLIP JONC	3	3				
14	90464–07M20	CLAMP BRIDE	1	1				
15	6H4–41241–01	ROD, LINK BIELLETTE	1	1				
16	6H1–41237–00	JOINT, LINK RACCORD	1	1				
17	90202–05088	WASHER, PLATE RONDELLE, PLATE	1	1				
18	90468–05M03	CLIP JONC	1	1				
19	95380–05600	NUT ECROU	1	1				
20	6E9–41237–00	JOINT, LINK RACCORD	1	1				
21	63D–21707–00	OIL TANK COMP. RESERVOIR A PETROLE COMP.	1	1				
22	90445–11M15	HOSE (L360) DURITE (L360)	1	1				
23	90467–11M08	CLIP JONC	2	2				
24	6H4–21752–00	TUBE, FILLER 1 DURITE	1	1				
25	90465–13M30	CLAMP BRIDE	1	1				
26	63D–2175R–00	HOOK, BAND CROCHET, BANDE	1	1				
27	63D–2176M–00	HOOK CROCHET	1	1				

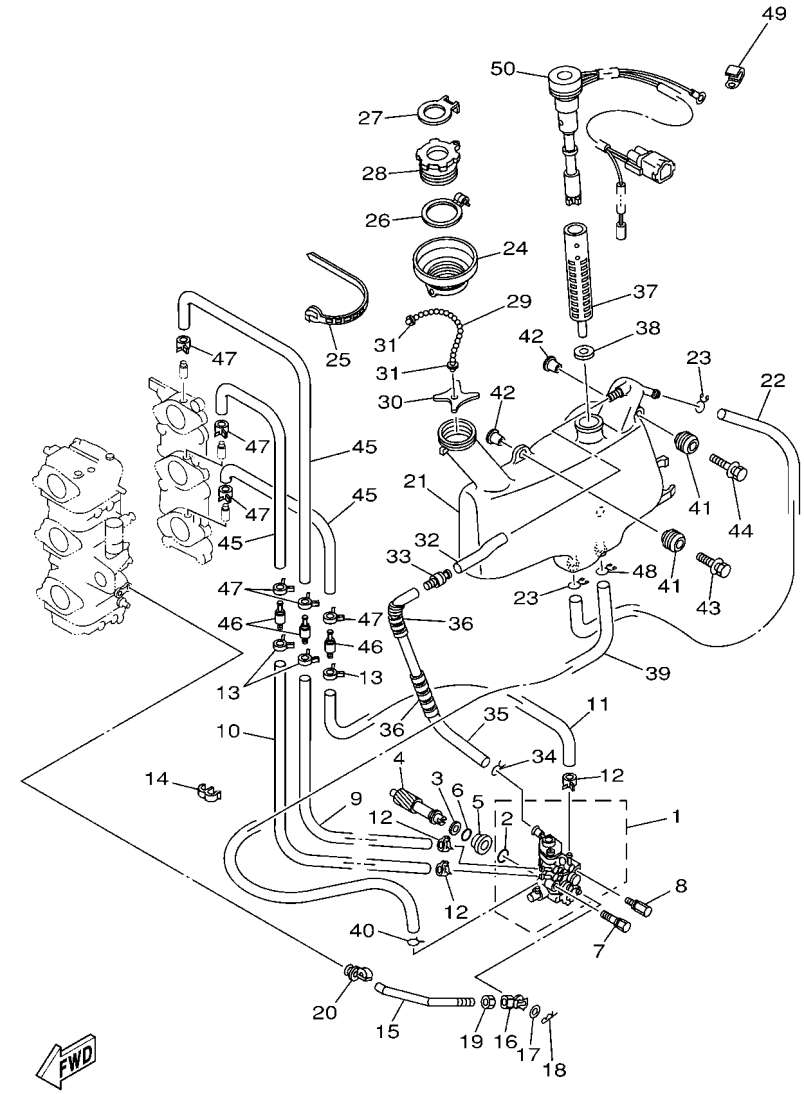

63B0100-0070

FIG. 7 OIL PUMP 1 — POMPE A HUILE 1

REF. NO.	PART NO. N° PIECES	DESCRIPTION DESCRIPTION	ETO	EO	MHO			REMARKS REMARQUES
28	6H4–21770–00	OIL TANK CAP ASSY CABOCHON DE RESERVOIR A HUILE	1	1				
29	6H5–24633–10	CHAIN, BALL CHANE DE BALLE	1	1				
30	6J8–21758–00	WASHER, SPECIAL 2 RONDELLE, SPECIALE 2	1	1				
31	6H4–21757–00	WASHER, SPECIAL 1 RONDELLE, SPECIALE 1	2	2				
32	90445–11M23	HOSE (L85) DURITE (L85)	1	1				
33	63D–21744–00	BREATHER RENIFLARD	1	1				
34	90467–10M04	CLIP JONC	1	1				
35	90445–11M17	HOSE (L300) DURITE (L300)	1	1				
36	90446–10M01	HOSE (L60) DURITE (L60)	2	2				
37	6J8–13411–00	STRAINER, OIL FILTRE, HUILE	1	1				
38	6J8–13414–00	GASKET, STRAINER COVER JOINT, COUVERCLE DE FILTRE	1	1				
39	6L2–13416–00	PIPE, OIL 1 DURITE A HUILE	1	1				
40	90467–08004	CLIP JONC	1	1				
41	6A0–82317–00	DAMPER, IGNITION COIL AMORTISSEUR, BOBINE D'ALLUM	3	3				
42	90387–06119	COLLAR COLLERETTE	3	3				
43	90119–06290	BOLT, WITH WASHER BOULON, AVEC RONDELLE	2	2				
44	90119–06306	BOLT, WITH WASHER BOULON, AVEC RONDELLE	1	1				
45	90445–07M87	HOSE (L110) DURITE (L110)	3	3				
46	6E9–13183–70	VALVE, CHECK CLAPET ANTI RETOUR	3	3				
47	90468–07M02	CLIP JONC	6	6				
48	90467–11M08	CLIP JONC	1	1				
49	90465–06M86	CLAMP BRIDE	1	1				
50	63D–85720–01	OIL LEVEL GAUGE ASSY JAUGE A HUILE CPLT	1	1				

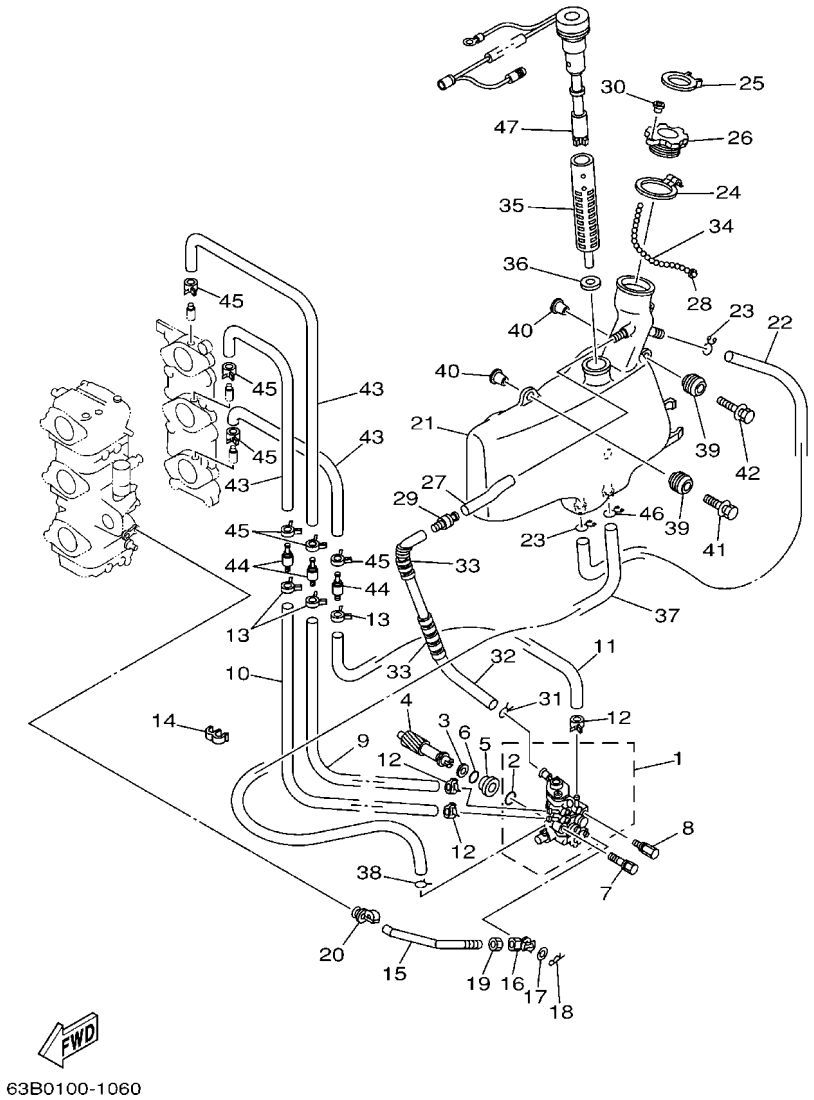

FIG. 8 OIL PUMP 2 — POMPE A HUILE 2

REF. NO.	PART NO. N° PIECES	DESCRIPTION DESCRIPTION	ETO	EO	MHO			REMARKS REMARQUES
1	63D–13200–00	OIL INJECTION PUMP ASSY POMPE A HUILE COMPLET			1			
2	93210–19MA7	.O-RING .JOINT TORIQUE			1			
3	90201–08M93	WASHER, PLATE RONDELLE, PLATE			1			
4	6H4–11537–01	GEAR, DRIVEN PIGNON SECONDAIRE			1			
5	6H1–13117–01	COLLAR, DISTANCE ENTRETOISE			1			
6	93210–13M04	O-RING JOINT TORIQUE			1			
7	90109–06M39	BOLT BOULON			1			
8	90109–06M40	BOLT BOULON			1			
9	90445–07M44	HOSE (L250) DURITE (L250)			1			
10	90445–07M23	HOSE (L180) DURITE (L180)			1			
11	90445–07MA6	HOSE (L90) DURITE (L90)			1			
12	90468–07M02	CLIP JONC			3			
13	90468–07M02	CLIP JONC			3			
14	90464–07M20	CLAMP BRIDE			1			
15	6H4–41241–01	ROD, LINK BIELLETTE			1			
16	6H1–41237–00	JOINT, LINK RACCORD			1			
17	90202–05088	WASHER, PLATE RONDELLE, PLATE			1			
18	90468–05M03	CLIP JONC			1			
19	95380–05600	NUT ECROU			1			
20	6E9–41237–00	JOINT, LINK RACCORD			1			
21	63D–21707–10	OIL TANK COMP. RESERVOIR A PETROLE COMP.			1			
22	90445–11M15	HOSE (L360) DURITE (L360)			1			
23	90467–11M08	CLIP JONC			2			
24	63D–2175R–00	HOOK, BAND CROCHET, BANDE			1			
25	63D–2176M–00	HOOK CROCHET			1			
26	6H4–21770–00	OIL TANK CAP ASSY CABOCHON DE RESERVOIR A HUILE			1			
27	90445–11M23	HOSE (L85) DURITE (L85)			1			

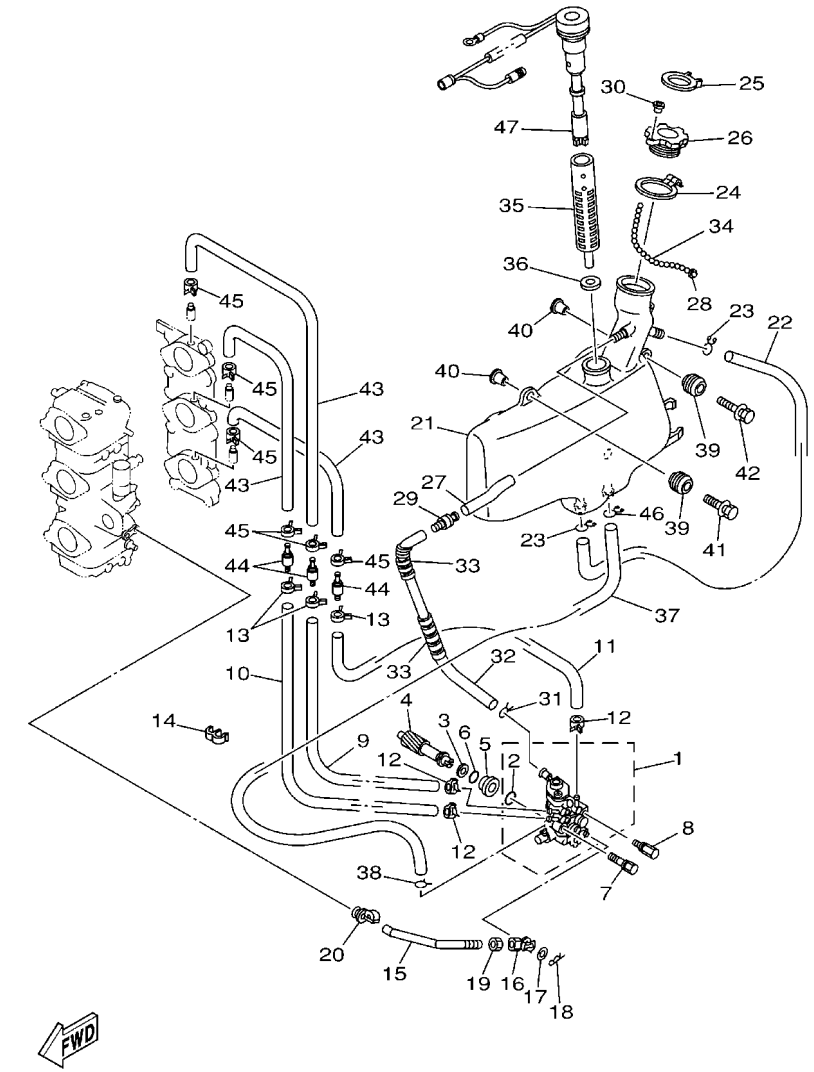

FIG. 8 OIL PUMP 2 — POMPE A HUILE 2

REF. NO.	PART NO. N° PIECES	DESCRIPTION DESCRIPTION	ETO	EO	MHO			REMARKS REMARQUES
28	6H4–21757–00	WASHER, SPECIAL 1 RONDELLE, SPECIALE 1			1			
29	63D–21744–00	BREATHER RENIFLARD			1			
30	6H4–24634–00	HOOK, CHAIN BALL ATTACHE			1			
31	90467–10M04	CLIP JONC			1			
32	90445–11M17	HOSE (L300) DURITE (L300)			1			
33	90446–10M01	HOSE (L60) DURITE (L60)			2			
34	6H4–24633–01	CHAIN, BALL CHANE DE BALLE			1			
35	6J8–13411–00	STRAINER, OIL FILTRE, HUILE			1			
36	6J8–13414–00	GASKET, STRAINER COVER JOINT, COUVERCLE DE FILTRE			1			
37	6L2–13416–00	PIPE, OIL 1 DURITE A HUILE			1			
38	90467–08004	CLIP JONC			1			
39	6A0–82317–00	DAMPER, IGNITION COIL AMORTISSEUR, BOBINE D'ALLUM			3			
40	90387–06119	COLLAR COLLERETTE			3			
41	90119–06290	BOLT, WITH WASHER BOULON, AVEC RONDELLE			2			
42	90119–06306	BOLT, WITH WASHER BOULON, AVEC RONDELLE			1			
43	90445–07M87	HOSE (L110) DURITE (L110)			3			
44	6E9–13183–70	VALVE, CHECK CLAPET ANTI RETOUR			3			
45	90468–07M02	CLIP JONC			6			
46	90467–11M08	CLIP JONC			1			
47	63D–85720–11	OIL LEVEL GAUGE ASSY JAUGE A HUILE CPLT			1			

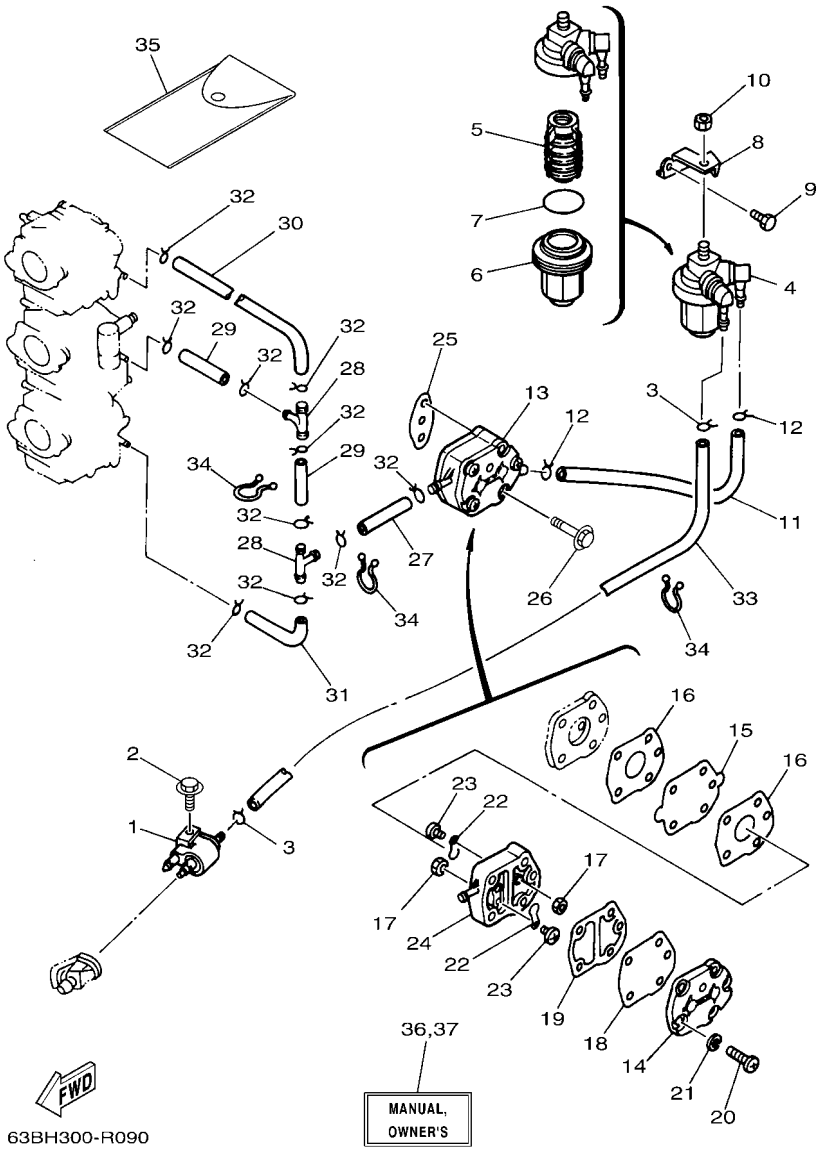

FIG. 9 FUEL — CARBURANT

REF. NO.	PART NO. N° PIECES	DESCRIPTION DESCRIPTION	ETO	EO	MHO			REMARKS REMARQUES
1	6G1–24304–10	FUEL PIPE JOINT COMP. 1 DURITE RACCORDEMT. A ESSENCE	1	1	1			
2	97E95–06525	BOLT, HEXAGON W/W DEEP RECESS VIS HEXAGONAL AVC RONDELLE	1	1	1			
3	90467–08004	CLIP JONC	2	2	2			
4	61N–24560–00	FILTER ASSY ENS FILTRE	1	1	1			
5	61N–24563–00	.ELEMENT, FILTER .ELEMENT, FILTRE	1	1	1			
6	61N–24521–00	.CUP, FILTER .CUVETTE, FILTRE	1	1	1			
7	93210–32738	.O-RING .JOINT TORIQUE	1	1	1			
8	6H4–24566–02	BRACKET, FILTER SUPPORT, FILTRE	1	1	1			
9	97013–06014	BOLT BOULON	1	1	1			
10	95380–08600	NUT ECROU	1	1	1			
11	6H4–24314–00	PIPE 4 DURITE 4	1	1	1			
12	90467–08004	CLIP JONC	2	2	2			
13	692–24410–00	FUEL PUMP ASSY POMPE A ESSENCE	1	1	1			
14	6A0–24413–00	.BODY 2 .CORPS 2	1	1	1			
15	692–24411–00	.DIAPHRAGM .DIAPHRAGME	1	1	1			
16	648–24434–01	.GASKET, BODY .JOINT, CORPS	2	2	2			
17	95380–03600	.NUT .ECROU	2	2	2			
18	663–24411–00	.DIAPHRAGM .DIAPHRAGME	1	1	1			
19	648–24435–02	.GASKET, BODY 2 .JOINT, CORPS 2	1	1	1			
20	98503–05028	.SCREW, PAN HEAD .VIS	3	3	3			
21	92990–05100	.WASHER, SPRING .RONDELLE, GROWER	3	3	3			
22	6A0–24421–01	.VALVE, CHECK .SOUPAPE, RETENUE	2	2	2			
23	6A0–14325–00	.SCREW, PAN HEAD .VIS TETE CONIQUE	2	2	2			
24	6A0–24412–02	.BODY 1 .CORPS 1	1	1	1			
25	650–24431–A0	GASKET, FUEL PUMP 1 JOINT 1 DE POMPE A ESSENCE	1	1	1			
26	97E95–06540	BOLT, HEXAGON W/W DEEP RECESS VIS HEXAGONAL AVC RONDELLE	2	2	2			
27	90445–09063	HOSE (L80) DURITE (L80)	1	1	1			

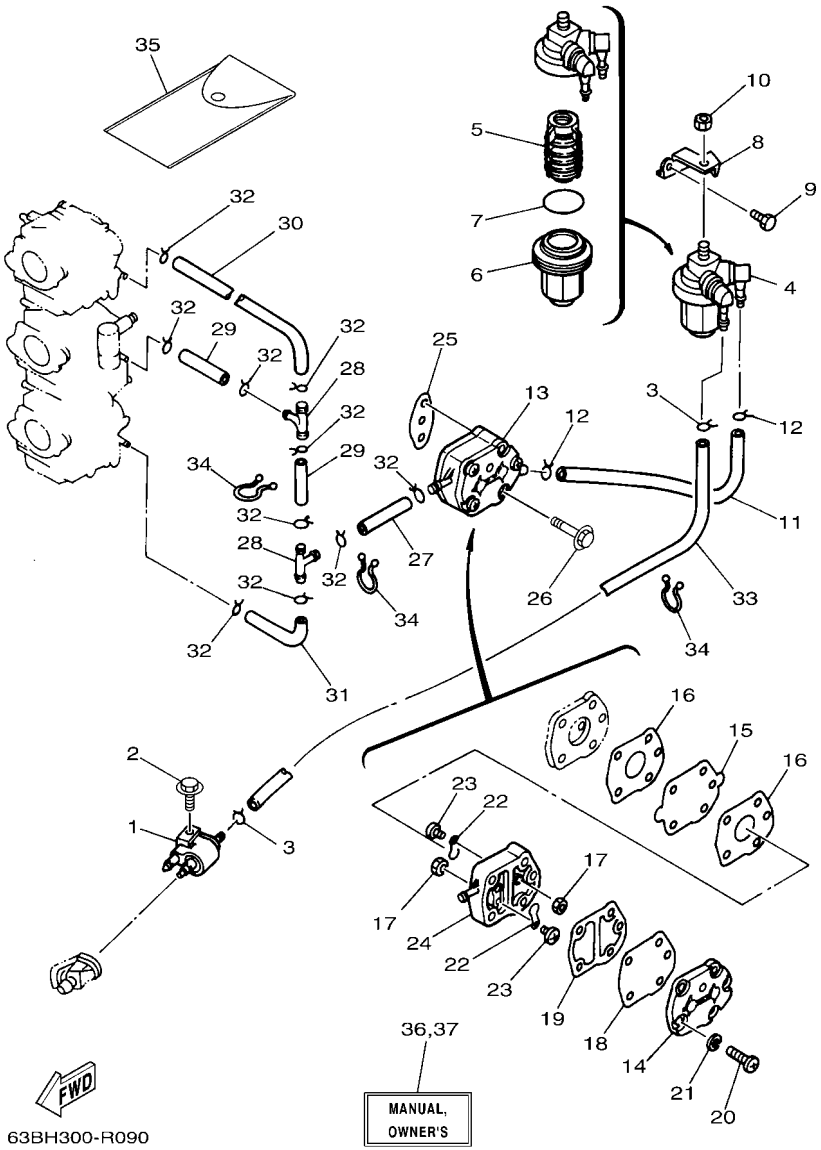

FIG. 9 FUEL — CARBURANT

REF. NO.	PART NO. N° PIECES	DESCRIPTION DESCRIPTION	ETO	EO	MHO			REMARKS REMARQUES
28	688–24378–00	PIPE, JOINT 3 DURITE RACCORDEMENT 3	2	2	2			
29	90445–09057	HOSE (L43) DURITE (L43)	2	2	2			
30	6H4–24313–00	PIPE 3 DURITE 3	1	1	1			
31	6H4–24312–00	PIPE 2 DURITE 2	1	1	1			
32	90467–08004	CLIP JONC	10	10	10			
33	6H4–24311–00	PIPE, FUEL 1 DURITE A ESSENCE	1	1	1			
34	90464–15M11	CLAMP BRIDE	3	3	3			
35	656–W2810–02	TOOL KIT TROUSSE A OUTILS	1	1	1			AP AP
36	63B–28199–7N–E0	MANUAL,OWNER'S MANUEL D'UTILISATION		1	1			UR (E) UR (E)
	63B–28199–7N–F0	MANUAL,OWNER'S MANUEL D'UTILISATION		1	1			UR (F) UR (F)
	63B–28199–7N–S0	MANUAL,OWNER'S MANUEL D'UTILISATION		1	1			UR (ES) UR (ES)
	63B–28199–7N–G0	MANUAL,OWNER'S MANUEL D'UTILISATION		1	1			UR (D) UR (D)
	63B–28199–7N–D0	MANUAL,OWNER'S MANUEL D'UTILISATION		1	1			UR (NL) UR (NL)
	63B–28199–7N–H0	MANUAL,OWNER'S MANUEL D'UTILISATION		1	1			UR (I) UR (I)
37	63B–28199–8N–K0	MANUAL,OWNER'S MANUEL D'UTILISATION		1	1			UR (DK) UR (DK)
	63B–28199–8N–R0	MANUAL,OWNER'S MANUEL D'UTILISATION		1	1			UR (GR) UR (GR)
	63B–28199–8N–P0	MANUAL,OWNER'S MANUEL D'UTILISATION		1	1			UR (P) UR (P)
	63B–28199–8N–N0	MANUAL,OWNER'S MANUEL D'UTILISATION		1	1			UR (N) UR (N)
	63B–28199–8N–M0	MANUAL,OWNER'S MANUEL D'UTILISATION		1	1			UR (S) UR (S)
	63B–28199–8N–L0	MANUAL,OWNER'S MANUEL D'UTILISATION		1	1			UR (SF) UR (SF)

FIG. 10 STARTER DEMARREUR

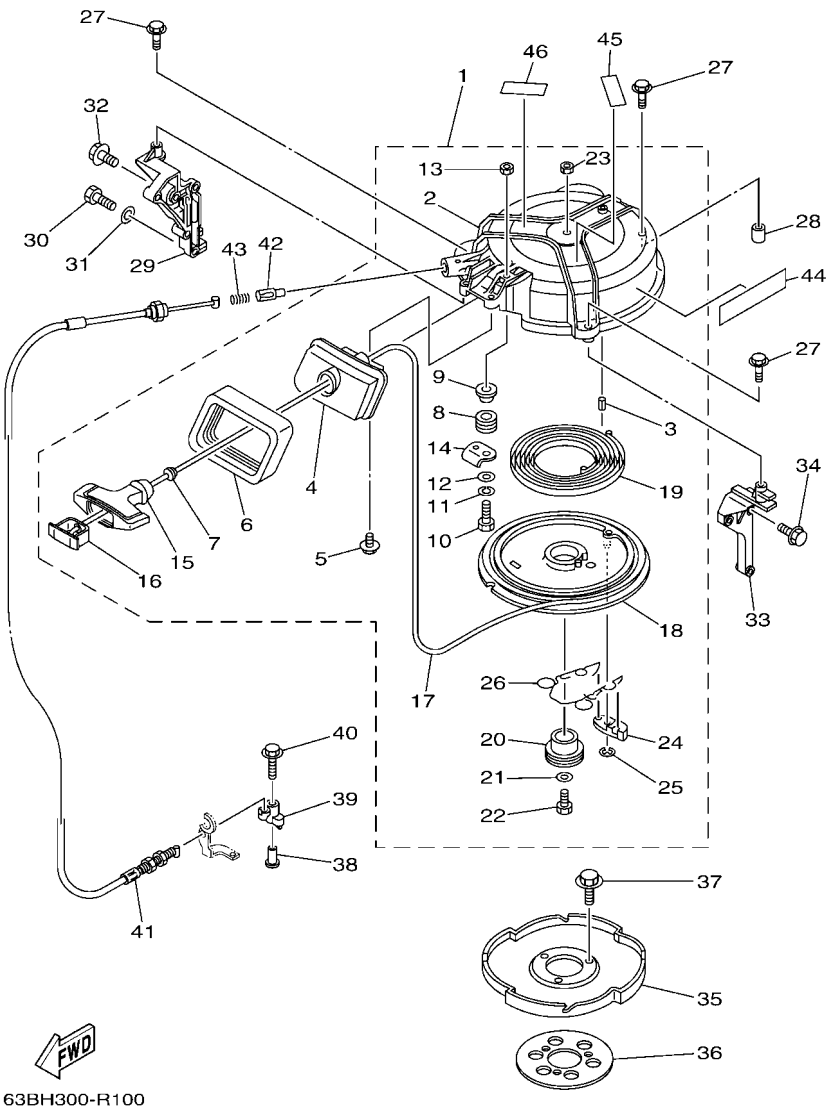

*1:CUT FROM 50M ROLLS,PART NO.90890-44373,CUTTING LENGTH 2.095M

*1:A PRELEVER SUR BOBINE 50M ,REFERENCE 90890-44373,
LONGUEUR DE COUPE 2.095M

REF. NO.	PART NO. N° PIECES	DESCRIPTION DESCRIPTION	ETO	EO	MHO			REMARKS REMARQUES
1	63B–Y130E–06	STARTER ASSY DEMARREUR COMPLET			1			
2	6H4–15711–02	.CASE, STARTER .CARTER DE DEMARREUR			1			
3	91690–40018	.PIN, SPRING .AGRAFFE			1			
4	6H4–15758–01–8D	.GUIDE, WIRE .GUIDE DE FIL			1			
5	97E95–06516	.BOLT, HEXAGON W/W DEEP RECESS .VIS HEXAGONAL AVC RONDELLE			2			
6	6H4–15762–00	.SEAL, RUBBER 2 .JOINT CAOUTCHOUC 2			1			
7	6A0–15789–00	.DAMPER .AMORTISSEUR			1			
8	6F5–15752–00	.ROLLER, WIRE .GALET, CABLE			1			
9	90387–06M69	.COLLAR .COLLERETTE			1			
10	97013–06030	.BOLT .BOULON			1			
11	92903–06100	.WASHER, SPRING .RONDELLE, GROWER			1			
12	92903–06600	.WASHER, PLATE .RONDELLE, PLATE			1			
13	95380–06600	.NUT, HEXAGON .ECROU			1			
14	6H4–15787–01	.STAY .SUPPORT			1			
15	689–15755–01	.HANDLE, STARTER .POIGNEE, DE DEMARREUR			1			
16	6F5–15779–02	.COVER .COUVERCLE			1			
17	*	.WIRE (L:2095MM) .FIL (L:2095MM)			1			*1 *1
18	6H4–15714–00	.DRUM, SHEAVE .TAMBOUR, POULIE			1			
19	90510–08002	.SPRING, SPIRAL .RESSORT, HELICOIDAL			1			
20	6H4–15717–01	.SHAFT, STARTER .AXE DE DEMARREUR			1			
21	90201–06060	.WASHER, PLATE .RONDELLE, PLATE			1			
22	97D95–06020	.BOLT, HEXAGON DEEP RECESS .VIS HEXAGONAL			1			
23	95380–06600	.NUT, HEXAGON .ECROU			1			
24	676–15741–03	.PAWL, DRIVE .CLIQUET, ENTRAINEMENT			1			
25	93430–06M02	.CIRCLIP .CLIPS			1			
26	6H4–15705–00	.SPRING, DRIVE PAWL .RESSORT DE CLIQUET			1			
27	97E95–06535	BOLT, HEXAGON W/W DEEP RECESS VIS HEXAGONAL AVC RONDELLE			3			

FIG. 10 STARTER DEMARREUR

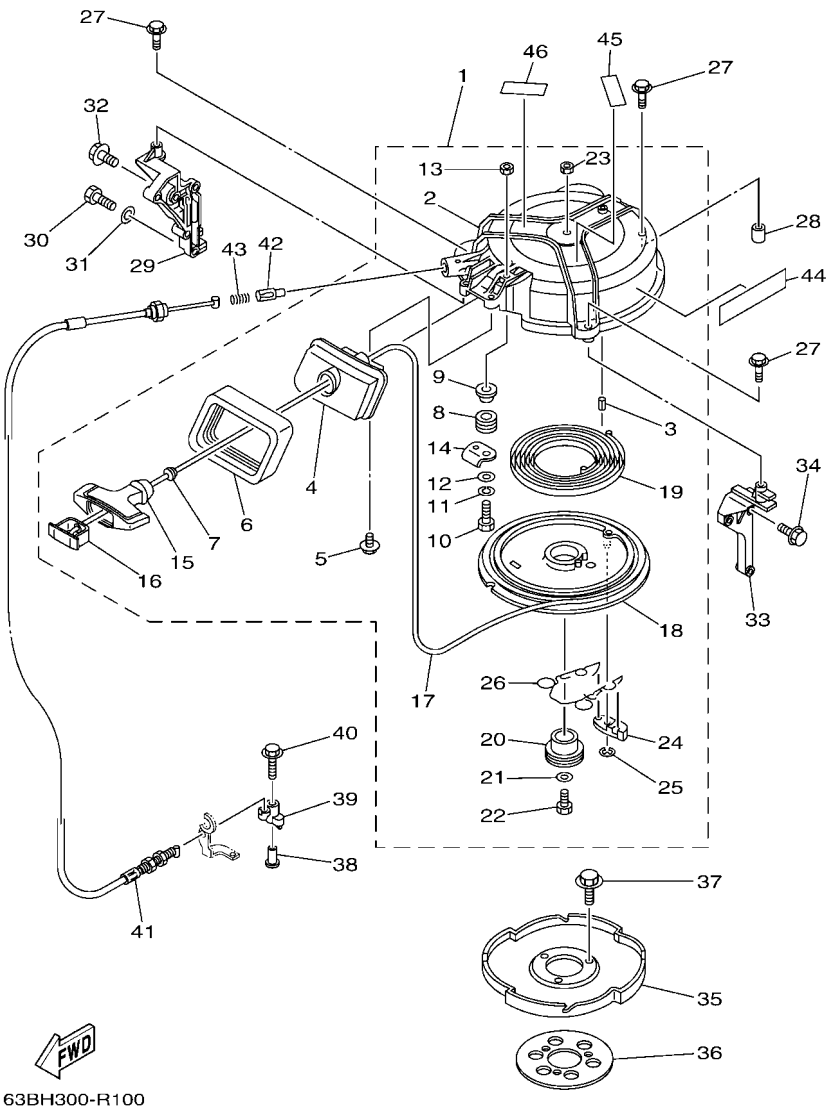

*1:CUT FROM 50M ROLLS,PART NO.90890-44373,CUTTING LENGTH 2.095M

*1:A PRELEVER SUR BOBINE 50M ,REFERENCE 90890-44373,
LONGUEUR DE COUPE 2.095M

REF. NO.	PART NO. N° PIECES	DESCRIPTION DESCRIPTION	ETO	EO	MHO			REMARKS REMARQUES
28	99530–10014	PIN, DOWEL GOUJON, D'ASSEMBLAGE			1			
29	63D–15771–00–1S	STAY 1 SUPPORT 1			1			
30	97013–08025	BOLT BOULON			2			
31	92903–08600	WASHER, PLATE RONDELLE, PLATE			2			
32	90119–06MA2	BOLT, WITH WASHER BOULON, AVEC RONDELLE			1			
33	6H4–15772–02	STAY 2 SUPPORT 2			1			
34	90119–06MA3	BOLT, WITH WASHER BOULON, AVEC RONDELLE			3			
35	6H4–15723–01–94	PULLEY, STARTER POULIE DE DEMARREUR			1			
36	6J8–81365–A0	GASKET, HOLE COVER JOINT, COUVERCLE DE TROU			1			
37	97513–08520	BOLT, WITH WASHER VIS HEXAGONAL AVC RONDELLE			3			
38	90387–06M66	COLLAR COLLERETTE			1			
39	63D–15746–00	ARM BRAS			1			
40	97E95–06540	BOLT, HEXAGON W/W DEEP RECESS VIS HEXAGONAL AVC RONDELLE			1			
41	63D–15770–00	CABLE COMP., STARTER STOP CABLE, BUTEE DE DEMAR			1			
42	656–15748–00	PLUNGER, STARTER STOP PLONGEUR, BOUTE DE DEMAR			1			
43	90501–10227	SPRING, COMPRESSION RESSORT, COMPRESSION			1			
44	63D–13437–N0	MARK, CAUTION MAKER			1			
45	6EE–81995–40	LABEL, WARNING ETIQUETTE, AVERTISSEMENT			1			
46	6EE–81995–50	LABEL, WARNING ETIQUETTE, AVERTISSEMENT			1			

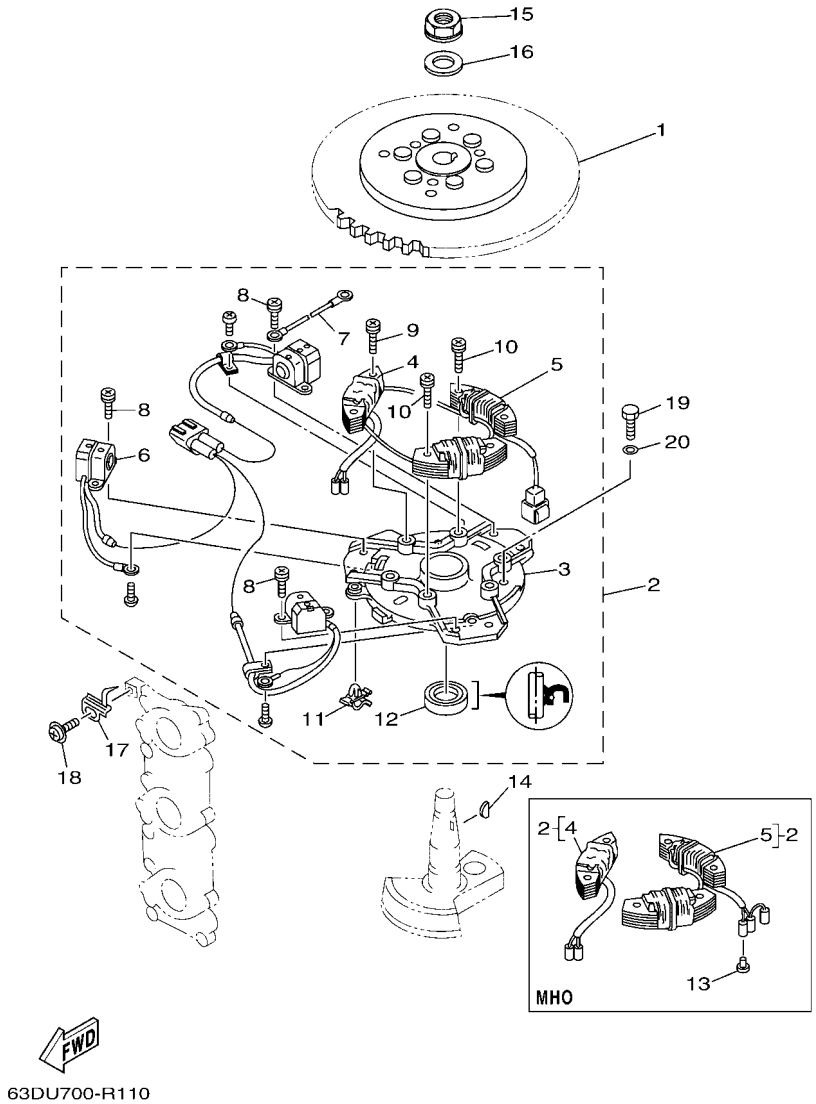

FIG. 11 GENERATOR — GENERATRICE

REF. NO.	PART NO. N° PIECES	DESCRIPTION DESCRIPTION	ETO	EO	MHO			REMARKS REMARQUES
1	63D–85550–00	ROTOR ASSY ROTOR CPLT	1	1				
	63D–85550–10	ROTOR ASSY ROTOR CPLT			1			
2	63D–85560–10	BASE ASSY ENS. FLASQUE	1	1				
	63D–85560–00	BASE ASSY ENS. FLASQUE			1			
3	6H4–15359–04–94	.HOUSING, OIL SEAL .LOGEMENT, BAGUE D'ETANCHEITE	1	1	1			
4	63D–85520–01	.COIL, CHARGE .BOBINE, CHARGE	1	1	1			
5	63D–85533–10	.COIL, LIGHTING .BOBINE, ECLAIRAGE	1	1				
	63D–85533–00	.COIL, LIGHTING .BOBINE, ECLAIRAGE			1			
6	63D–85580–00	.COIL, PULSER .BOBINE, PULSEUR	1	1	1			
7	6H4–83354–00	.WIRE, EARTH LEAD 1 .FIL 1, MASSE	1	1	1			
8	63D–81345–00	.SCREW, WITH WASHER (M5X12) .VIS, AVEC RONDELLE (M5X12)	6	6	6			
9	63D–81345–10	.SCREW, WITH WASHER (M6X25) .VIS, AVEC RONDELLE (M6X25)	2	2	2			
10	63D–81345–20	.SCREW, WITH WASHER (M6X30) .VIS, AVEC RONDELLE (M6X30)	4	4	4			
11	90464–03M15	.CLAMP .BRIDE	1	1	1			
12	93102–23096	.OIL SEAL .JOINT SPY	1	1	1			
13	703–82119–00	COVER, LEAD WIRE GARNITURE, FIL			3			50H 50H
	703–82119–00	COVER, LEAD WIRE GARNITURE, FIL			1			40V 40V
14	6H4–11545–00	KEY, WOODRUFF CLAVETTE, DEMI-LUNE	1	1	1			
15	90179–16M05	NUT ECROU	1	1	1			
16	90201–16M44	WASHER, PLATE RONDELLE, PLATE	1	1	1			
17	6H4–81332–00	PLATE, TIMING PLATEAU, ALLUMAGE	1	1	1			
18	97985–05210	SCREW, WITH WASHER VIS, AVEC RONDELLE	1	1	1			
19	97013–06018	BOLT BOULON	3	3	3			
20	92903–06600	WASHER, PLATE RONDELLE, PLATE	3	3	3			

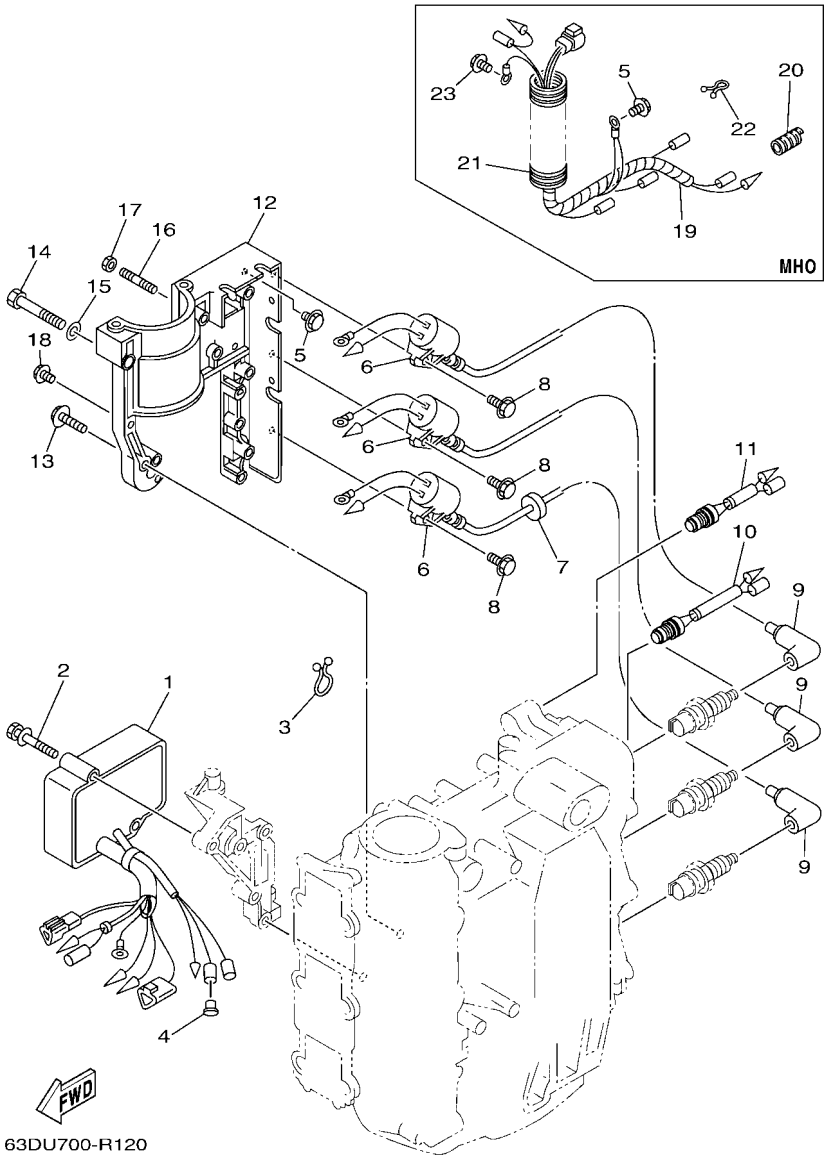

FIG. 12 ELECTRICAL 1 — PARTIE ELECTRIQUE 1

REF. NO.	PART NO. N° PIECES	DESCRIPTION DESCRIPTION	ETO	EO	MHO			REMARKS REMARQUES
1	63D–85540–04	C.D.I. UNIT ASSY BLOC C.D.I.	1	1	1			
2	90119–06M51	BOLT, WITH WASHER BOULON, AVEC RONDELLE	2	2	2			
3	90464–15M11	CLAMP BRIDE	1	1	1			
4	703–82119–00	COVER, LEAD WIRE GARNITURE, FIL	1					
5	97E95–06514	BOLT, HEXAGON W/W DEEP RECESS VIS HEXAGONAL AVC RONDELLE	1	1	1			
6	6H5–85570–00	IGNITION COIL ASSY BOBINE D'ALLUMAGE (ENS.)	3	3	3			
7	90480–25161	GROMMET PASSE-FIL	1	1	1			
8	97E95–06520	BOLT, HEXAGON W/W DEEP RECESS VIS HEXAGONAL AVC RONDELLE	3	3	3			
9	6G1–82370–21	PLUG CAP ASSY ANTIPARASITE	3	3	3			
10	689–82560–00	THERMO SWITCH ASSY THERMO-CONTACT COMPLET	1	1	1			
11	6H4–82560–00	THERMO SWITCH ASSY THERMO-CONTACT COMPLET	1	1	1			
12	6H4–81822–02–98	BRACKET, STARTING MOTOR SUPPORT, DEMARREUR ELECTRIQUE	1	1				
13	97E95–06530	BOLT, HEXAGON W/W DEEP RECESS VIS HEXAGONAL AVC RONDELLE	4	4				
14	97013–08050	BOLT BOULON	1	1				
15	92903–08600	WASHER, PLATE RONDELLE, PLATE	1	1				
16	95670–06640	BOLT, STUD GOUJON	1	1				
17	90179–06M24	NUT ECROU	1	1				
18	97E95–06514	BOLT, HEXAGON W/W DEEP RECESS VIS HEXAGONAL AVC RONDELLE	2	2				
19	63D–82531–00	WIRE, LEAD FIL			1			
20	90446–10M02	HOSE DURITE			1			
21	6G1–83557–00	TUBE TUBE			1			
22	90464–05M16	CLAMP BRIDE			1			
23	97E95–06514	BOLT, HEXAGON W/W DEEP RECESS VIS HEXAGONAL AVC RONDELLE			1			

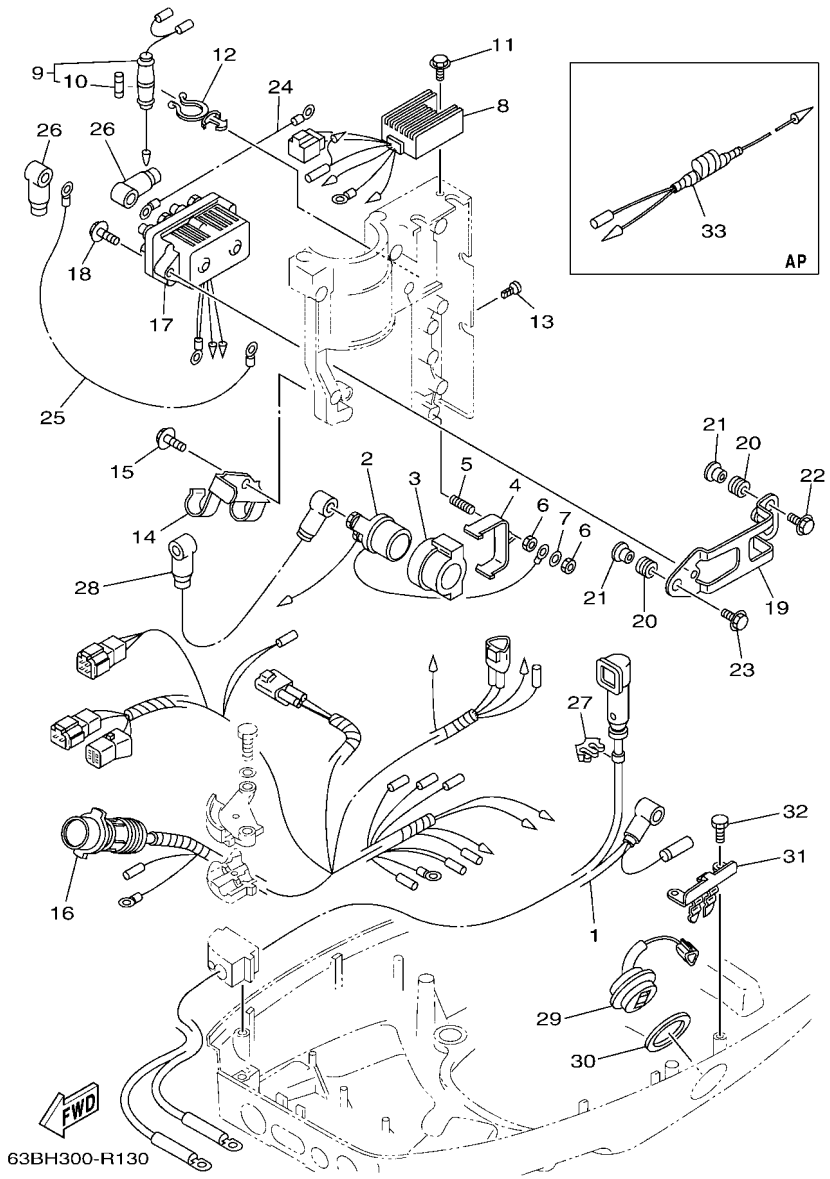

FIG. 13 ELECTRICAL 2 — PARTIE ELECTRIQUE 2

REF. NO.	PART NO. N° PIECES	DESCRIPTION DESCRIPTION	ETO	EO	MHO			REMARKS REMARQUES
1	6H4–82105–03	BATTERY CABLE CABLE DE BATTERIE	1	1				
2	6G1–81941–10	STARTER RELAY ASSY LANCEUR RELAIS (ENS.)	1	1				
3	6H4–81952–00	HOLDER, RELAY SUPPORT, RELAIS	1	1				
4	6H4–81945–00	PLATE, SWITCH FITTING PLAQUE, FIXATION DU RELAIS	1	1				
5	90116–06M22	BOLT, STUD GOUJON	1	1				
6	95380–06600	NUT, HEXAGON ECROU	2	2				
7	92990–06600	WASHER, PLATE RONDELLE, PLATE	1	1				
8	6H2–81960–10	RECTIFIER & REGULATOR ASSY REDRESSEUR REGULATEUR CPLT	1	1				
9	6H4–82150–01	FUSE HOLDER ASSY SUPPORT DE FUSIBLE	1	1				
10	663–82151–01	.FUSE (12V-20A) .FUSIBLE (12V-20A)	1	1				
11	97E95–06514	BOLT, HEXAGON W/W DEEP RECESS VIS HEXAGONAL AVC RONDELLE	1	1				
12	90464–15M27	CLAMP BRIDE	1	1				
13	90338–05M11	PLUG PLOT	2	2				
14	63D–82594–00	CLAMP BRIDE	1	1				
15	97E95–06512	BOLT, HEXAGON W/W DEEP RECESS VIS HEXAGONAL AVC RONDELLE	1	1				
16	63D–82590–40	WIRE HARNESS ASSY (10P) FAISCEAU DE FILS COMPLET (10P)	1					
	63D–82590–10	WIRE HARNESS ASSY (10P) FAISCEAU DE FILS COMPLET (10P)		1				
17	6H1–81950–00	RELAY ASSY RELAIS COMPLET	1					
18	97E95–06525	BOLT, HEXAGON W/W DEEP RECESS VIS HEXAGONAL AVC RONDELLE	2					
19	6H4–81945–20	PLATE, SWITCH FITTING PLAQUE, FIXATION DU RELAIS	1					
20	90480–13M24	GROMMET PASSE-FIL	3					
21	90387–06M05	COLLAR COLLERETTE	3					
22	90105–06M15	BOLT, FLANGE BOULON, A COLLERETTE	2					
23	90105–06M16	BOLT, FLANGE BOULON, A COLLERETTE	1					
24	6H5–81949–01	WIRE, LEAD FIL	1					
25	61A–81949–00	WIRE, LEAD FIL	1					
26	682–82119–01	COVER, LEAD WIRE GARNITURE, FIL	4					

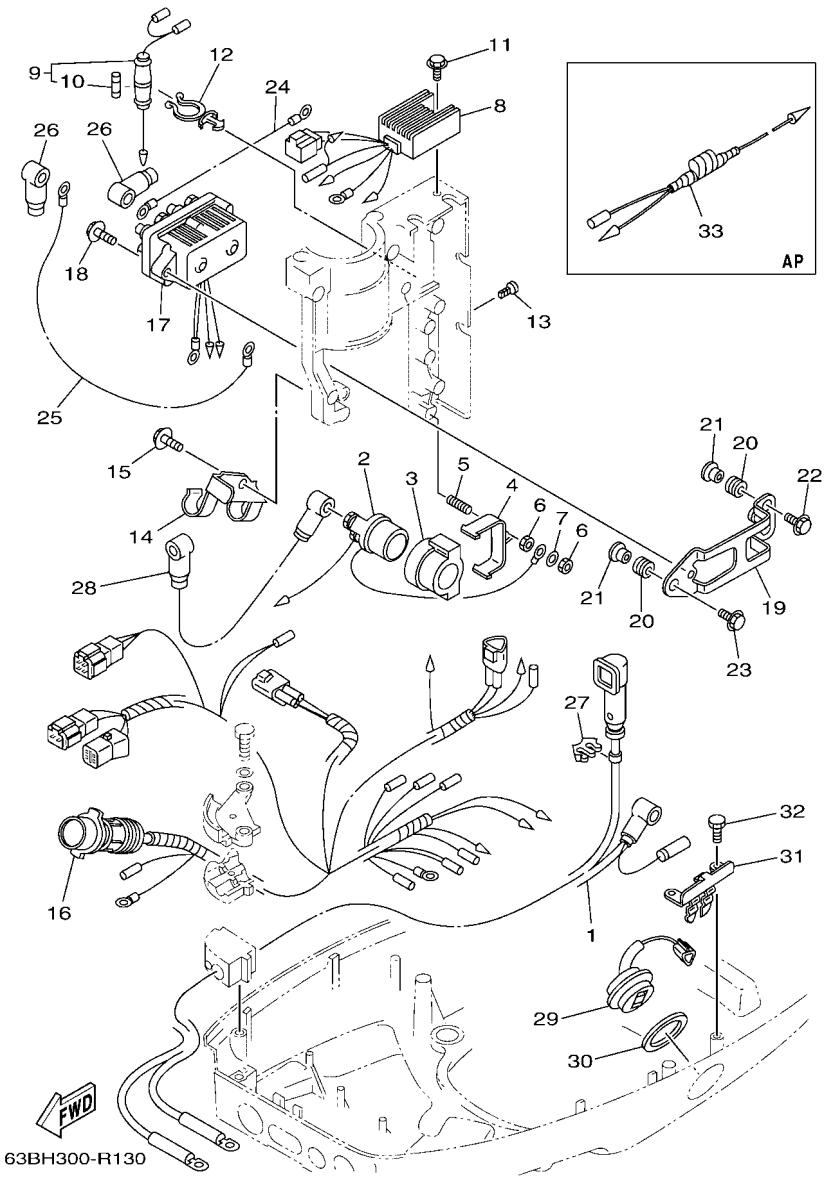

FIG. 13 ELECTRICAL 2 — PARTIE ELECTRIQUE 2

REF. NO.	PART NO. N° PIECES	DESCRIPTION DESCRIPTION	ETO	EO	MHO			REMARKS REMARQUES
27	90464–07M20	CLAMP BRIDE	1	1				
28	6H4–82117–01	WIRE, LEAD FIL	1	1				
29	63D–82563–11	TRIM & TILT SWITCH ASSY INCLINER ET PARER COMMUTATEUR	1					
30	6E5–82587–00	GASKET JOINT	1					
31	6R3–83614–00	BRACKET SUPPORT	1					
32	97D95–06016	BOLT, HEXAGON DEEP RECESS VIS HEXAGONAL	2					
33	6H4–81315–11	LEAD WIRE ASSY FIL	1					AP AP

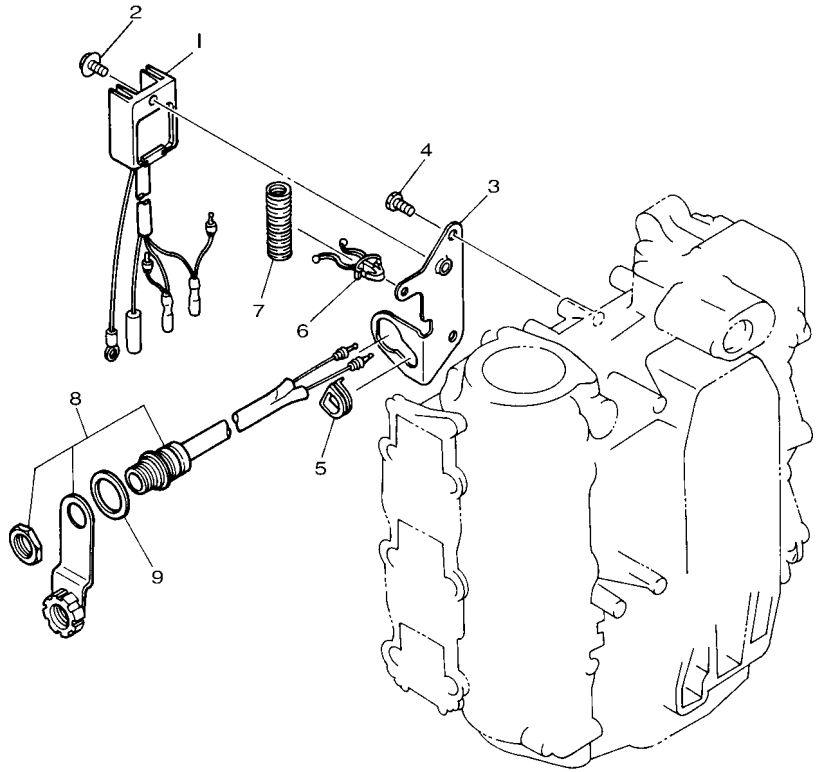

63BG300-Q140

FIG. 14 ELECTRICAL 3 — PARTIE ELECTRIQUE 3

REF. NO.	PART NO. N° PIECES	DESCRIPTION DESCRIPTION	ETO	EO	MHO			REMARKS REMARQUES
1	6J8–81960–00	RECTIFIER & REGULATOR ASSY REDRESSEUR REGULATEUR CPLT			1			40V 40V
2	97E95–06512	BOLT, HEXAGON W/W DEEP RECESS VIS HEXAGONAL AVC RONDELLE			1			40V 40V
3	6H4–81975–02	PLATE, RECTIFIER FITTING PLAQUE, FIXATION DU REDRESSEUR			1			40V 40V
4	97013–06012	BOLT BOULON			2			40V 40V
5	6F5–81922–00	GROMMET OEILLET CAOUTCHOUC			1			40V 40V
6	90464–12M35	CLAMP BRIDE			1			40V 40V
7	90440–14M00	PIPE DURITE			1			40V 40V
8	682–84381–00	2P CONCENT RALLONGE 2 FILS			1			40V 40V
9	90202–26M45	WASHER, PLATE RONDELLE, PLATE			1			40V 40V

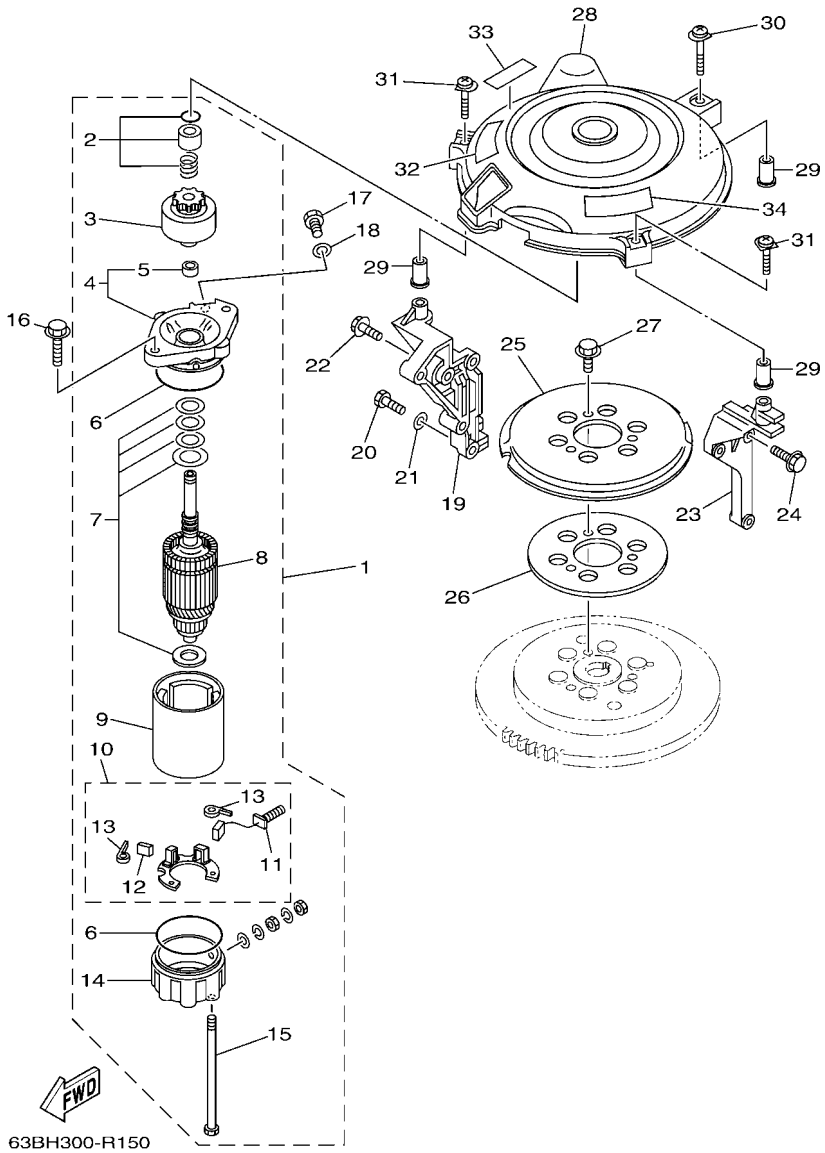

FIG. 15 STARTING MOTOR — DEMARREUR ELECTRIQUE

REF. NO.	PART NO. N° PIECES	DESCRIPTION DESCRIPTION	ETO	EO	MHO			REMARKS REMARQUES
1	6F5–81800–11	STARTING MOTOR ASSY DEMARREUR ELECTRIQUE COMPLET	1	1				
2	689–81857–11	.PINION STOPPER SET .BUTEE PIGNON	1	1				
3	689–81807–12	.GEAR ASSY, STARTING MOTOR .PIGNON, DEMARREUR ELECTRIQUE	1	1				
4	6F5–81830–11	.FRONT BRACKET ASSY .SUPPORT AVANT	1	1				
5	689–81831–00	..METAL, FRONT ..METAL, AVANT	1	1				
6	689–81847–11	.O-RING .JOINT TORIQUE	2	2				
7	689–81809–11	.WASHER KIT .JEU DE RONDELLES	1	1				
8	689–81850–12	.ARMATURE ASSY .INDUIT	1	1				
9	689–81810–11	.STATOR ASSY .STATOR COMPLET	1	1				
10	689–81840–11	.BRUSH HOLDER ASSY .SUPPORT DE CHARBON	1	1				
11	689–81811–11	..BRUSH 1 ..CHARBON 1	1	1				
12	689–81812–11	..BRUSH 2 ..CHARBON 2	1	1				
13	689–81813–10	..SPRING, BRUSH ..RESSORT, DE CHARBON	2	2				
14	689–81820–11	.REAR BRACKET ASSY .SUPPORT ARRIERE COMPLET	1	1				
15	689–81826–10	.BOLT .BOULON	2	2				
16	97513–08530	BOLT, WITH WASHER VIS HEXAGONAL AVC RONDELLE	2	2				
17	97013–08016	BOLT BOULON	1	1				
18	92903–08600	WASHER, PLATE RONDELLE, PLATE	1	1				
19	63D–15771–00–1S	STAY 1 SUPPORT 1	1	1				
20	97013–08025	BOLT BOULON	2	2				
21	92903–08600	WASHER, PLATE RONDELLE, PLATE	2	2				
22	90119–06MA2	BOLT, WITH WASHER BOULON, AVEC RONDELLE	1	1				
23	6H4–15772–02	STAY 2 SUPPORT 2	1	1				
24	90119–06MA3	BOLT, WITH WASHER BOULON, AVEC RONDELLE	3	3				
25	6J8–15723–E1	PULLEY, STARTER POULIE DE DEMARREUR	1	1				
26	6J8–81365–A0	GASKET, HOLE COVER JOINT, COUVERCLE DE TROU	1	1				
27	97513–08514	BOLT, WITH WASHER VIS HEXAGONAL AVC RONDELLE	3	3				

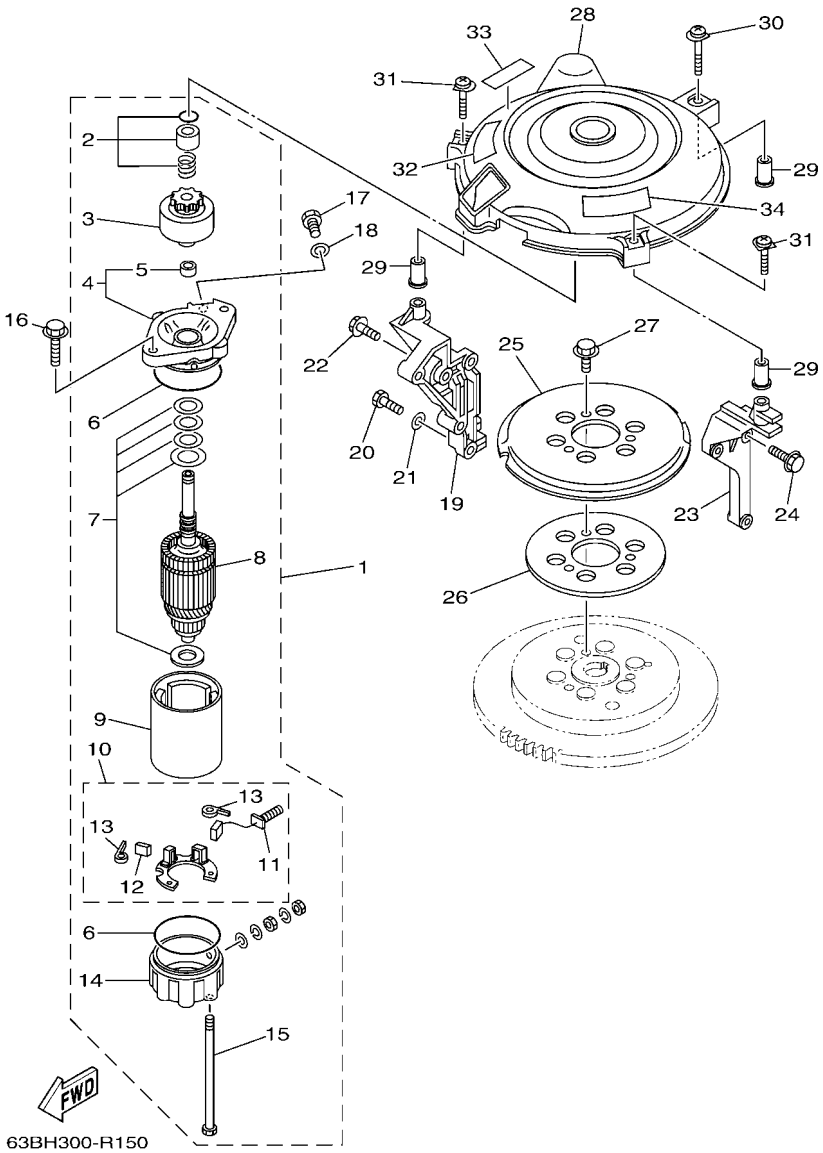

FIG. 15 STARTING MOTOR — DEMARREUR ELECTRIQUE

REF. NO.	PART NO. N° PIECES	DESCRIPTION DESCRIPTION	ETO	EO	MHO			REMARKS REMARQUES
28	6H4–81337–01	COVER, FLYWHEEL COUVERCLE, VOLANT	1	1				
29	90387–06M65	COLLAR COLLERETTE	3	3				
30	90159–06M21	SCREW, WITH WASHER VIS, AVEC RONDELLE	1	1				
31	90159–06M22	SCREW, WITH WASHER VIS, AVEC RONDELLE	2	2				
32	6EE–81995–40	LABEL, WARNING ETIQUETTE, AVERTISSEMENT	1	1				
33	6EE–81995–50	LABEL, WARNING ETIQUETTE, AVERTISSEMENT	1	1				
34	6AG–81996–00	MARK MARQUE	1	1				

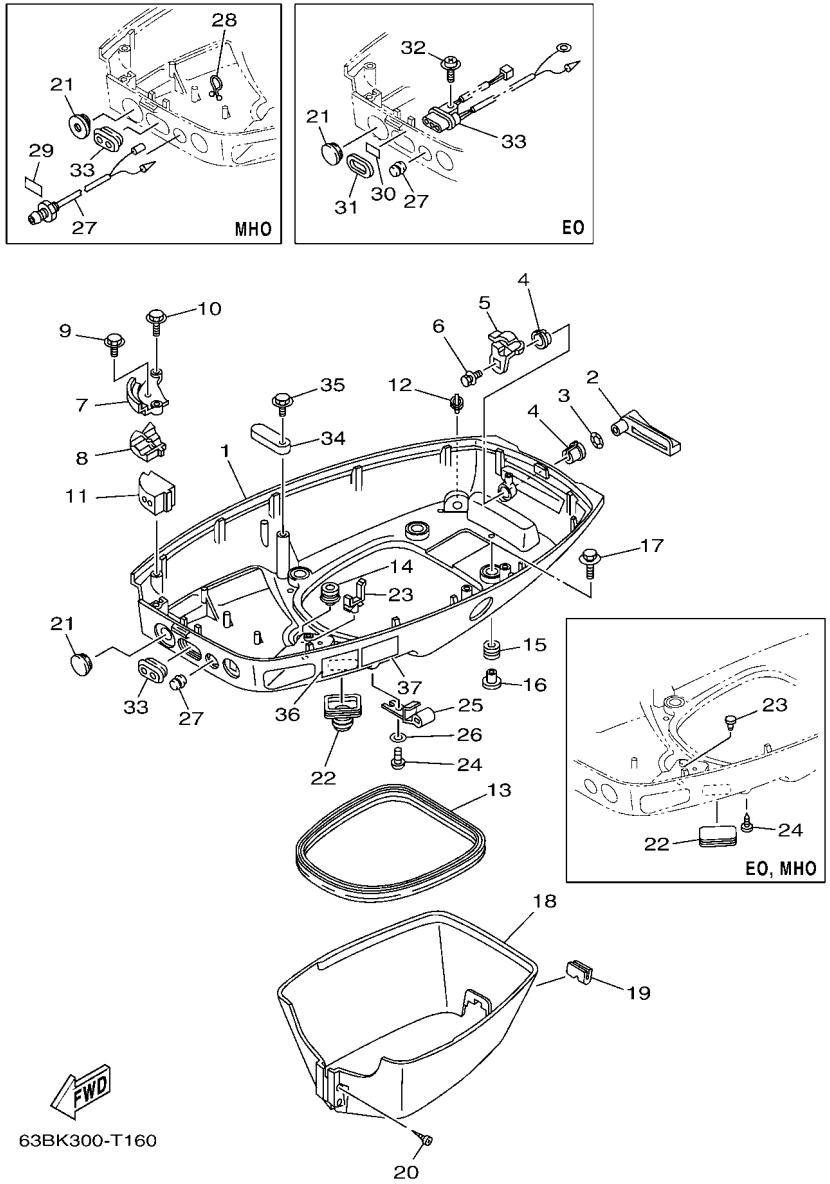

FIG. 16 BOTTOM COWLING — CAPOT INFERIEUR

REF. NO.	PART NO. N° PIECES	DESCRIPTION DESCRIPTION	ETO	EO	MHO			REMARKS REMARQUES
1	6H4–42711–25–8D	COWLING, BOTTOM 1 CUVETTE 1	1					
	6H4–42711–07–8D	COWLING, BOTTOM 1 CUVETTE 1		1	1			
2	6H4–42815–00	LEVER, CLAMP 1 LEVIER, PRESSE 1	1	1	1			
3	90206–12052	WASHER, WAVE RONDELLE, ONDULEE	1	1	1			
4	90386–12069	BUSH DOUILLE	2	2	2			
5	6H4–42816–00	LEVER, CLAMP 2 LEVIER, PRESSE 2	1	1	1			
6	90119–06273	BOLT, WITH WASHER BOULON, AVEC RONDELLE	1	1	1			
7	6H4–48531–11–94	BRACKET, REMOTE CONTROL 1 ETRIER 1, COMMANDE A DISTANCE	1	1	1			
8	6H4–48532–11–94	BRACKET, REMOTE CONTROL 2 ETRIER 2, COMMANDE A DISTANCE	1	1	1			
9	97595–05516	BOLT, WITH WASHER VIS HEXAGONAL AVC RONDELLE	1	1	1			
10	97E95–06520	BOLT, HEXAGON W/W DEEP RECESS VIS HEXAGONAL AVC RONDELLE	2	2	2			
11	6H4–42724–30	GROMMET PASSE-FIL	1					
	6H4–42724–20	GROMMET PASSE-FIL		1				
	6H4–42724–00	GROMMET PASSE-FIL			1			
12	6E5–44391–00	NIPPLE, HOSE RACCORD D'ESSENCE	1	1	1			
13	6H4–42716–00	RUBBER SEAL 1 JOINT EN CAOUTCHOUC 1	1	1	1			
14	6E5–42724–00	GROMMET PASSE-FIL	1	1	1			
15	90480–09M21	GROMMET PASSE-FIL	4	4	4			
16	90387–06M41	COLLAR COLLERETTE	4	4	4			
17	90119–06291	BOLT, WITH WASHER BOULON, AVEC RONDELLE	4	4	4			
18	63D–42741–00–8D	APRON CAPOT LATERAL	1	1	1			
19	63D–42717–00	RUBBER, SEAL 2 JOINT EN CAOUTCHOUC 2	1	1	1			
20	97780–60525	SCREW, TAPPING VIS, TETE BOMBEE	2	2	2			
21	676–42726–00	GROMMET PASSE-FIL	1	1				
	6H4–42726–40	GROMMET PASSE-FIL			1			
22	688–42726–10	GROMMET PASSE-FIL	1					
	6H4–42726–00	GROMMET PASSE-FIL		1	1			

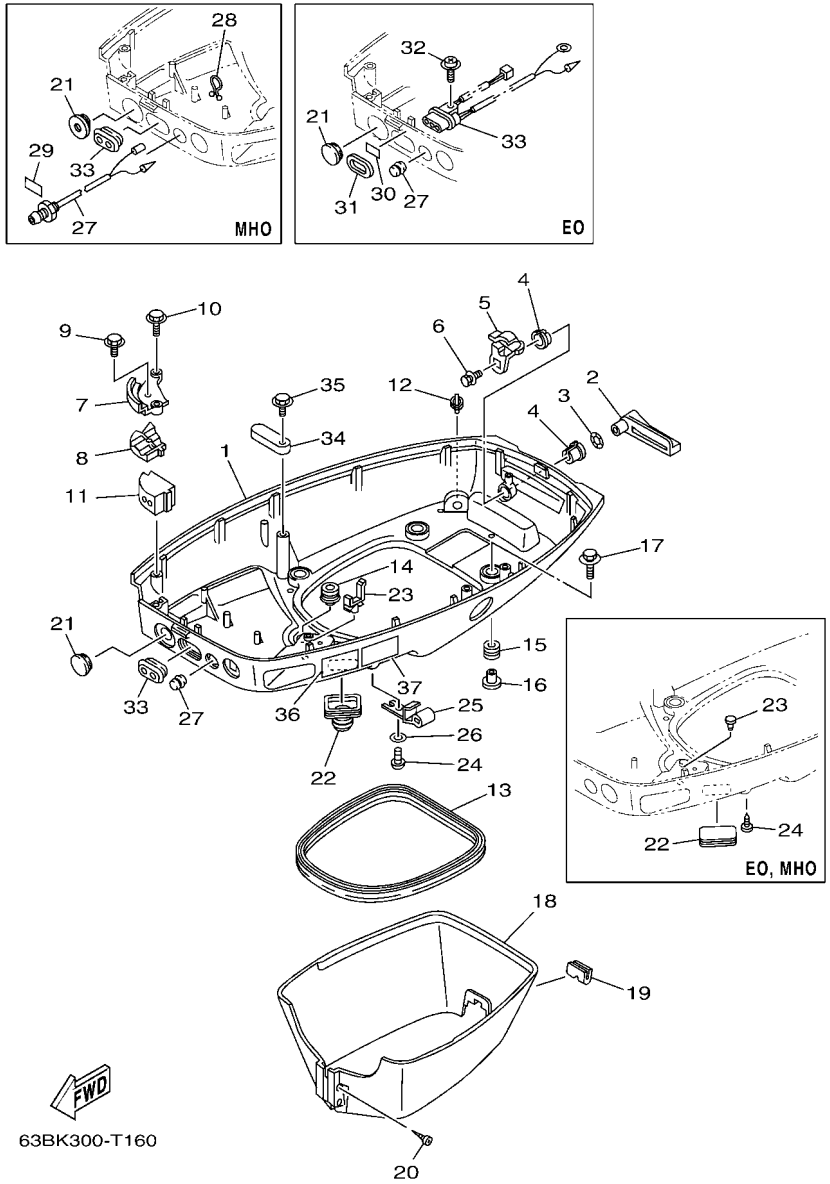

FIG. 16 BOTTOM COWLING — CAPOT INFERIEUR

REF. NO.	PART NO. N° PIECES	DESCRIPTION DESCRIPTION	ETO	EO	MHO			REMARKS REMARQUES
23	90464–16021	CLAMP BRIDE	1					
	703–82119–00	COVER, LEAD WIRE GARNITURE, FIL		1	1			
24	90157–06M01	SCREW, PAN HEAD VIS, TETE TRONCONIQUE	1					
	90338–05M03	PLUG PLOT		1	1			
25	6E5–24367–01	CLAMP, FUEL PIPE 2 COLLIER DE DURITE A ESSENCE	1					
26	92990–06600	WASHER, PLATE RONDELLE, PLATE	1					
27	6H4–42725–00	GROMMET PASSE-FIL	1	1				
	6J8–85410–00	EMERGENCY SIGNAL LIGHT ASSY FEU DE DETRESSE			1			
28	90464–08M07	CLAMP BRIDE			1			
29	6H4–85415–10	MARK, SIGNAL LAMP ETIQUETTE			1			
30	63D–84342–00	SEAT, EMBLEM SIEGE, EMBLEME		1				
31	6FM–83589–00	GASKET GARNITURE		1				
32	97980–06214	SCREW, WITH WASHER VIS, AVEC RONDELLE		1				
33	6H3–42727–00	GROMMET PASSE-FIL	1		1			
	63D–84301–00	PILOT LIGHT ASSY 1 LAMPE-TEMOIN 1		1				
34	6E5–82588–00	PLATE PLAQUE	1	1	1			
35	97E95–06520	BOLT, HEXAGON W/W DEEP RECESS VIS HEXAGONAL AVC RONDELLE	1	1	1			
36	6EE–42794–40	LABEL, WARNING (GENERAL) ETIQUETTE, AVERTISSEMENT	1	1	1			
37	6EE–42794–50	LABEL, WARNING (GENERAL) ETIQUETTE, AVERTISSEMENT	1	1	1			

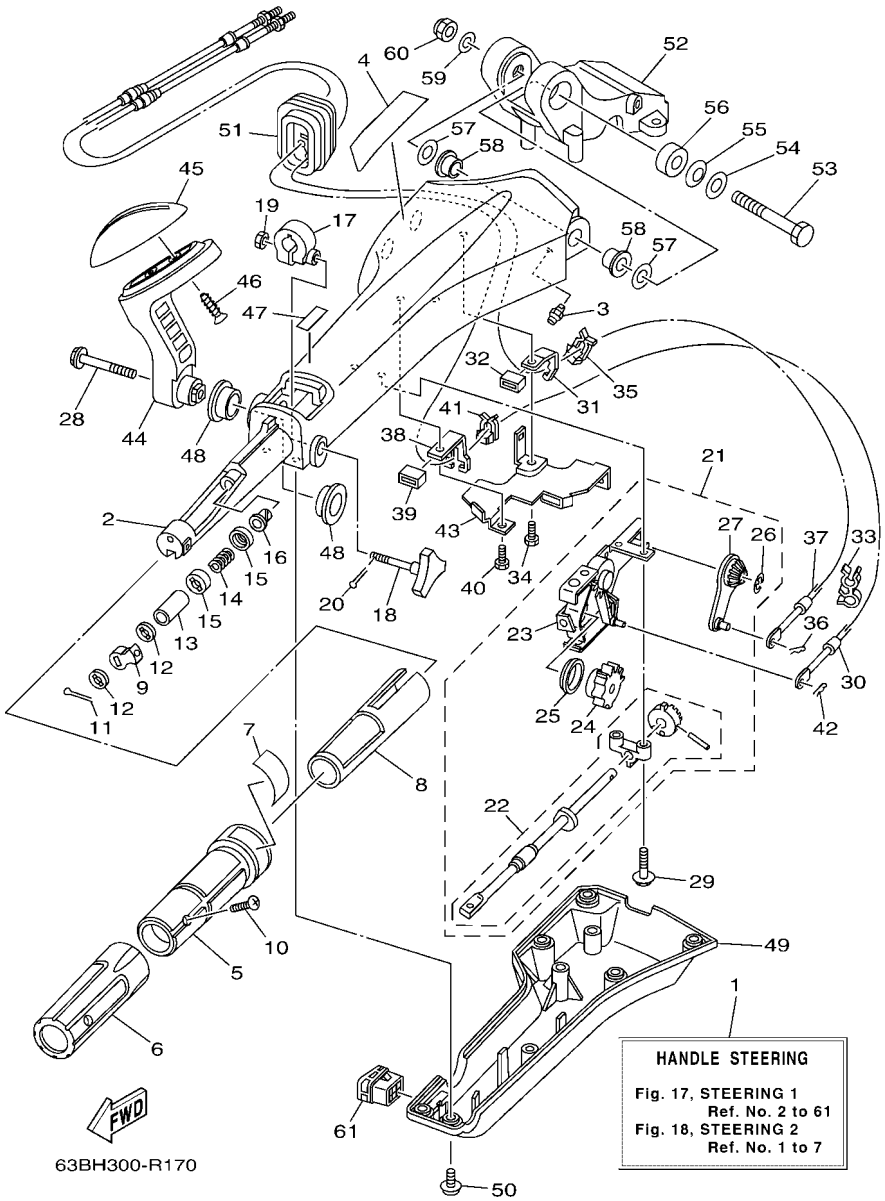

FIG. 17 STEERING 1 — DIRECTION 1

REF. NO.	PART NO. N° PIECES	DESCRIPTION DESCRIPTION	ETO	EO	MHO			REMARKS REMARQUES
1	6X4–42101–G5	HANDLE, STEERING POIGNEE			1			
2	6X4–42111–02–8D	HANDLE, STEERING POIGNEE			1			
3	93700–06002	NIPPLE, GREASE PION			1			
4	6X4–48215–10	GRAPHIC ADHESIF			1			
5	6X4–42119–01	GRIP, STEERING HANDLE POIGNEE, BARRE FRANCHE			1			
6	6X4–42177–00	RUBBER, HANDLE CAOUTCHOUC, POIGNEE			1			
7	6X4–42137–00	INDICATOR, THROTTLE INDICATEUR, ACCELERATION			1			
8	6X4–41291–00	BUSHING COUSSINET			1			
9	6X4–44139–01	COLLAR COLLIER			1			
10	90152–05007	SCREW, COUNTERSUNK VIS, TETE NOYEE			1			
11	91490–20010	PIN. COTTER GOUPILLE			1			
12	6X4–44177–00	WASHER RONDELLE			2			
13	6X4–42128–00	COLLAR, DISTANCE 1 COLLIER, D'ENTRETOISE 1			1			
14	90501–23215	SPRING, COMPRESSION RESSORT, COMPRESSION			1			
15	6X4–44188–00	WASHER RONDELLE			2			
16	90386–08032	BUSH DOUILLE			1			
17	63D–42126–00	FRICTION, STEERING HANDLE GRIP CUVETTE, POIGNEE DE DIRECTION			1			
18	6X4–48154–00	KNOB, THROTTLE BOUTON, ACCELERATEUR			1			
19	95380–06600	NUT, HEXAGON ECROU			1			
20	91490–20010	PIN. COTTER GOUPILLE			1			
21	6X4–44100–11	SHIFT LINK ASSY MAILLON DE SELECTEUR			1			
22	6X4–42115–00	.SHAFT, STEERING HANDLE .AXE, BARRE FRANCHE			1			
23	6X4–44102–00	.SHIFT ASSIST ASSY. .SELECTEUR DE MAINTIEN			1			
24	6X4–47731–01	.GEAR, DRIVE .PIGNON D'ENTRAINEMENT			1			
25	6X4–44132–00	.BUSHING .COUSSINET			1			
26	6X4–14137–00	.CLIP .JONC			1			
27	6X4–48261–00	.ARM, THROTTLE .BRAS, ACCELERATION			1			

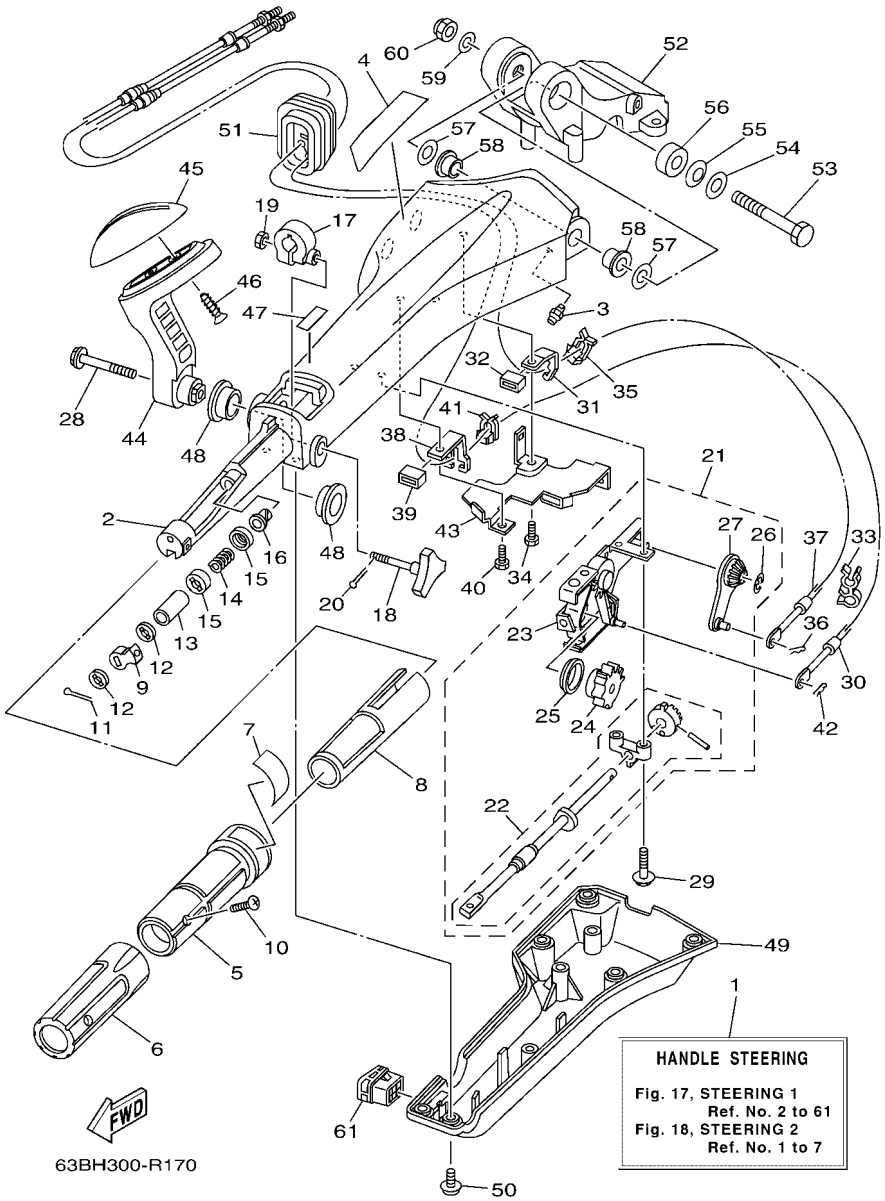

FIG. 17 STEERING 1 — DIRECTION 1

REF. NO.	PART NO. N° PIECES	DESCRIPTION DESCRIPTION	ETO	EO	MHO			REMARKS REMARQUES
28	97E95–08540	BOLT, HEXAGON W/W DEEP RECESS VIS HEXAGONAL AVC RONDELLE			1			
29	97E95–06530	BOLT, HEXAGON W/W DEEP RECESS VIS HEXAGONAL AVC RONDELLE			2			
30	63D–48321–11	CABLE CABLE			1			
31	6X4–48538–00	CLAMP, CABLE 1 COLLIER			1			
32	6X4–26367–00	PROTECTOR PROTECTEUR			1			
33	90464–09M42	CLAMP BRIDE			1			
34	97D95–06014	BOLT, HEXAGON DEEP RECESS VIS HEXAGONAL			1			
35	63D–48538–00	CLAMP, CABLE 1 COLLIER			1			
36	90468–10005	CLIP JONC			1			
37	63D–26301–01	THROTTLE CABLE ASSY CABLE D'ACCELERATEUR			1			
38	6X4–48538–10	CLAMP, CABLE 1 COLLIER			1			
39	6X4–26367–00	PROTECTOR PROTECTEUR			1			
40	97D95–06014	BOLT, HEXAGON DEEP RECESS VIS HEXAGONAL			1			
41	63D–48538–00	CLAMP, CABLE 1 COLLIER			1			
42	90468–10005	CLIP JONC			1			
43	6X4–42159–00	STAY SUPPORT			1			
44	6X4–44159–A0–8D	HANDLE, GEAR SHIFT POIGNEE, LEVIER D'EMBRAYAGE			1			
45	6X4–44173–00	LEVER, SHIFT CONTROL POIGNEE, INVERSION			1			
46	97780–60920	SCREW, TAPPING VIS, TETE BOMBEE			2			
47	6X3–44191–00	INDICATOR, SHIFT ETIQUETTE, EMBRAYAGE			1			
48	90386–26MA3	BUSH DOUILLE			2			
49	6X4–42131–01	COVER, HANDLE STEERING COUVERCLE			1			
50	97985–06216	SCREW, WITH WASHER VIS, AVEC RONDELLE			6			
51	6X4–42725–10	GROMMET PASSE-FIL			1			
52	63D–42121–22–8D	BRACKET SUPPORT			1			
53	90101–12014	BOLT BOULON			1			
54	92990–12200	WASHER, PLAIN RONDELLE, PLATE			1			

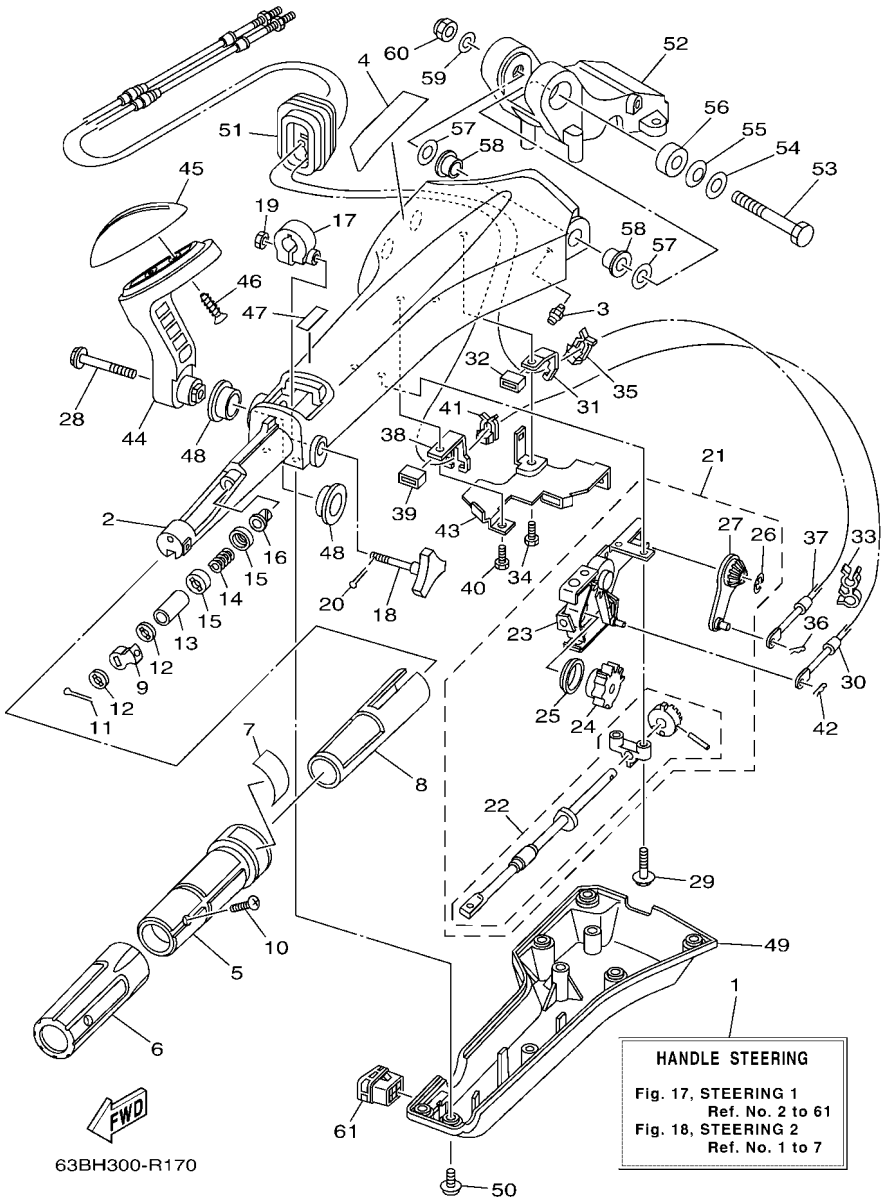

FIG. 17 STEERING 1 — DIRECTION 1

REF. NO.	PART NO. N° PIECES	DESCRIPTION DESCRIPTION	ETO	EO	MHO			REMARKS REMARQUES
55	90206–12M22	WASHER, WAVE RONDELLE, ONDULEE			1			
56	90387–12M02	COLLAR COLLERETTE			1			
57	90201–12035	WASHER, PLATE RONDELLE, PLATE			2			
58	90386–12003	BUSH DOUILLE			2			
59	92990–12600	WASHER, PLATE RONDELLE, PLATE			1			
60	90185–12M12	NUT, SELF-LOCKING ECROU,AUTO-BLOQUANT			1			
61	6X4–42728–10	CAP CAPUCHON			1			

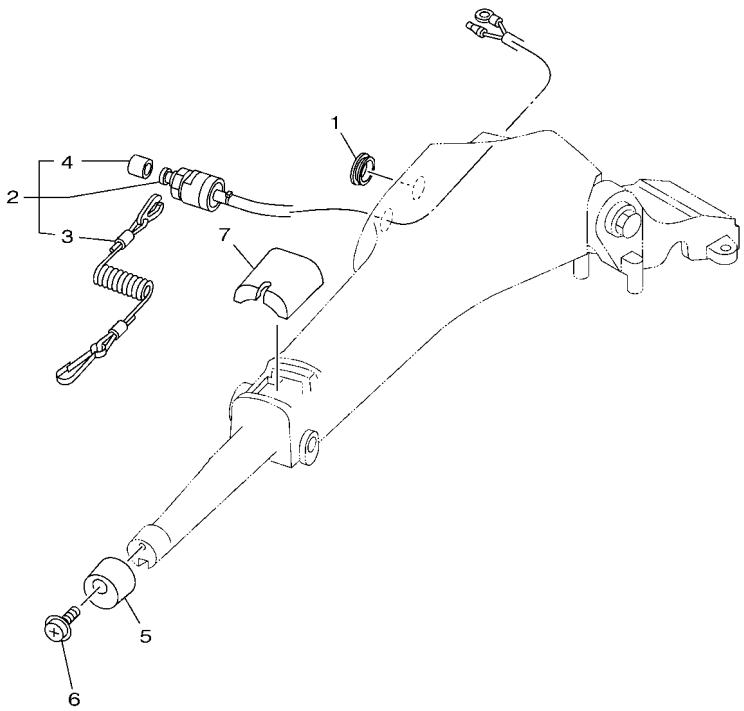

63BG700-Q150

FIG. 18 STEERING 2 — DIRECTION 2

REF. NO.	PART NO. N° PIECES	DESCRIPTION DESCRIPTION	ETO	EO	MHO			REMARKS REMARQUES
1	676–42726–00	GROMMET PASSE-FIL			1			
2	6K5–82575–03	ENGINE STOP SWITCH ASSY COUPE CIRCUIT CPLT			1			
3	682–82556–00	.LANYARD, STOP SWITCH .CORDON DU COUPE CIRCUIT			1			
4	689–8257Y–00	.CAP .COUVERCLE			1			
5	6X4–42728–00	CAP CAPUCHON			1			
6	97980–06216	SCREW, WITH WASHER VIS, AVEC RONDELLE			1			
7	6X4–81942–01	COVER COUVERCLE			1			

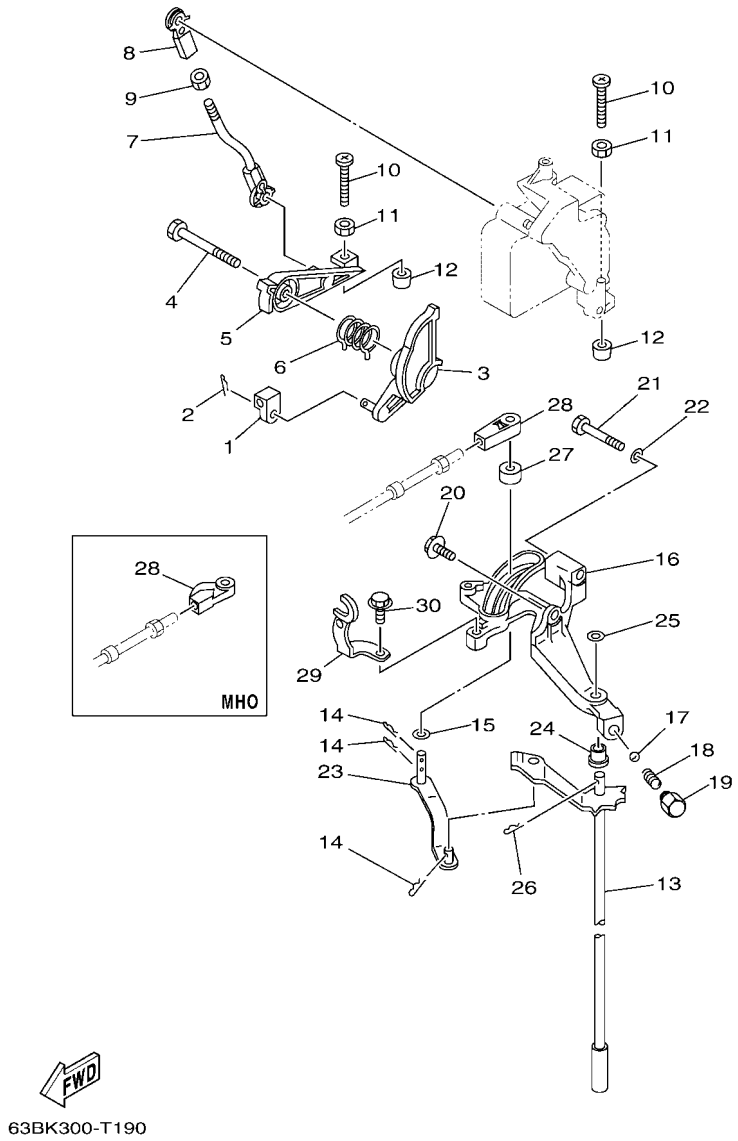

FIG. 19 CONTROL — COMMANDE

REF. NO.	PART NO. N° PIECES	DESCRIPTION DESCRIPTION	ETO	EO	MHO			REMARKS REMARQUES
1	6H4–48344–00	CABLE END, REMOTE CONTROL CHAPE CABLE	1	1	1			
2	90468–18008	CLIP JONC	1	1	1			
3	63D–41213–00	CAM, ACCEL. CAME, ACCELERATION	1	1	1			
4	90109–06M43	BOLT BOULON	1	1	1			
5	63D–41632–00	LEVER, MAGNETO CONTROL LEVIER, COMMANDE D'AVANCE	1	1	1			
6	90508–26117	SPRING, TORSION RESSORT, TORSION	1	1	1			
7	63D–41636–00	ROD, MAGNETO CONTROL BIELLETTE, COMMANDE D'AVANCE	1	1	1			
8	6H4–41237–00	JOINT, LINK RACCORD	1	1	1			
9	95380–05600	NUT ECROU	1	1	1			
10	90157–06M13	SCREW, PAN HEAD VIS, TETE TRONCONIQUE	2	2	2			
11	95303–06600	NUT ECROU	2	2	2			
12	688–44194–00	CAP CAPUCHON	2	2	2			
13	63D–44120–02	HANDLE GEAR SHIFT ASSY LEVIER D'EMBRAYAGE		1	1			S(16.0") S(16.0")
	63D–44120–12	HANDLE GEAR SHIFT ASSY LEVIER D'EMBRAYAGE	1	1	1			L(21.0") L(21.0")
14	90468–18008	CLIP JONC	3	3	3			
15	90202–07M07	WASHER, PLATE RONDELLE, PLATE	1	1	1			
16	63D–44117–00	BRACKET SUPPORT	1	1	1			
17	93501–04M02	BALL BILLE	1	1	1			
18	90501–12082	SPRING, COMPRESSION RESSORT, COMPRESSION	1	1	1			
19	648–42715–00	BUSHING COUSSINET	1	1	1			
20	97513–06520	BOLT, WITH WASHER VIS HEXAGONAL AVC RONDELLE	1	1	1			
21	97013–06045	BOLT BOULON	1	1	1			
22	92903–06600	WASHER, PLATE RONDELLE, PLATE	1	1	1			
23	63D–44121–00	LEVER, SHIFT ROD LEVIER, TIGE D'INVERSION	1	1	1			
24	90386–07M58	BUSH DOUILLE	1	1	1			
25	92990–08200	WASHER, PLAIN RONDELLE, PLATE	1	1	1			
26	91490–20012	PIN. COTTER GOUPILLE	1	1	1			

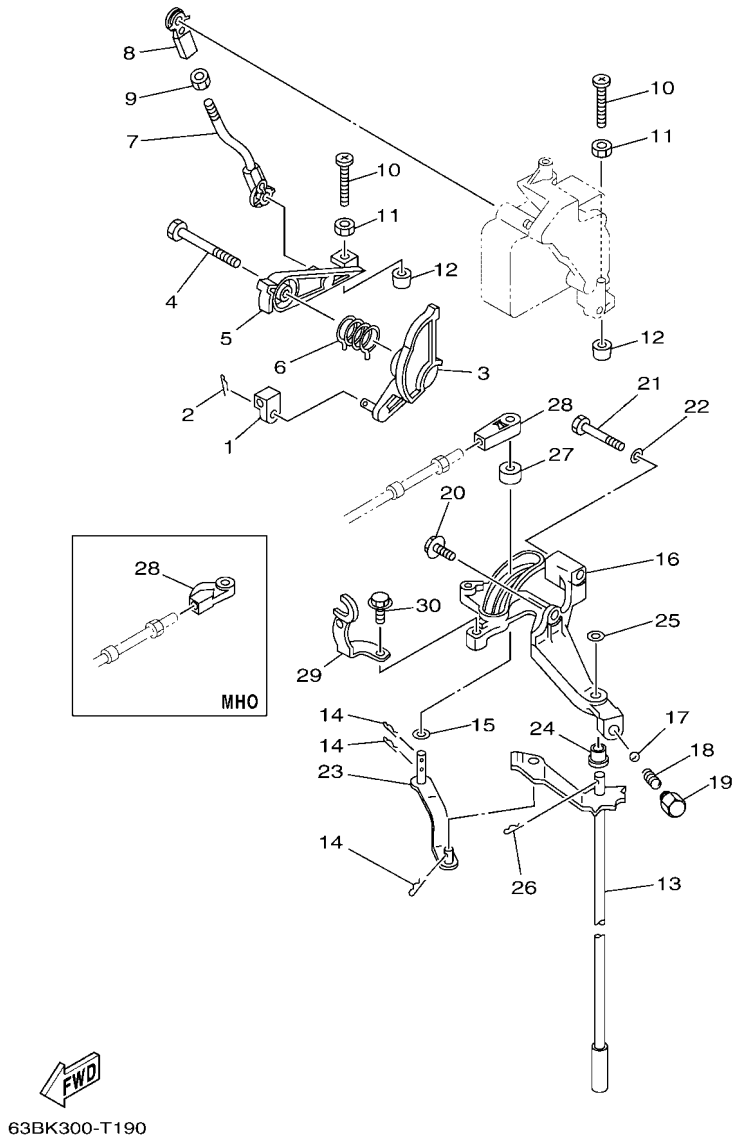

FIG. 19 CONTROL — COMMANDE

REF. NO.	PART NO. N° PIECES	DESCRIPTION DESCRIPTION	ETO	EO	MHO			REMARKS REMARQUES
27	688–44122–00	BUSHING, SHIFT ROD LEVER DOUILLE, LEVIER D'EMBRAYAGE	1	1	1			
28	6FM–48344–00	CABLE END, REMOTE CONTROL CHAPE CABLE	1	1				
	63D–48344–00	CABLE END, REMOTE CONTROL CHAPE CABLE			1			
29	63D–15774–00	STAY 4 SUPPORT 4	1	1	1			
30	97E95–06516	BOLT, HEXAGON W/W DEEP RECESS VIS HEXAGONAL AVC RONDELLE	1	1	1			

FIG. 20 BRACKET 1 SUPPORT 1

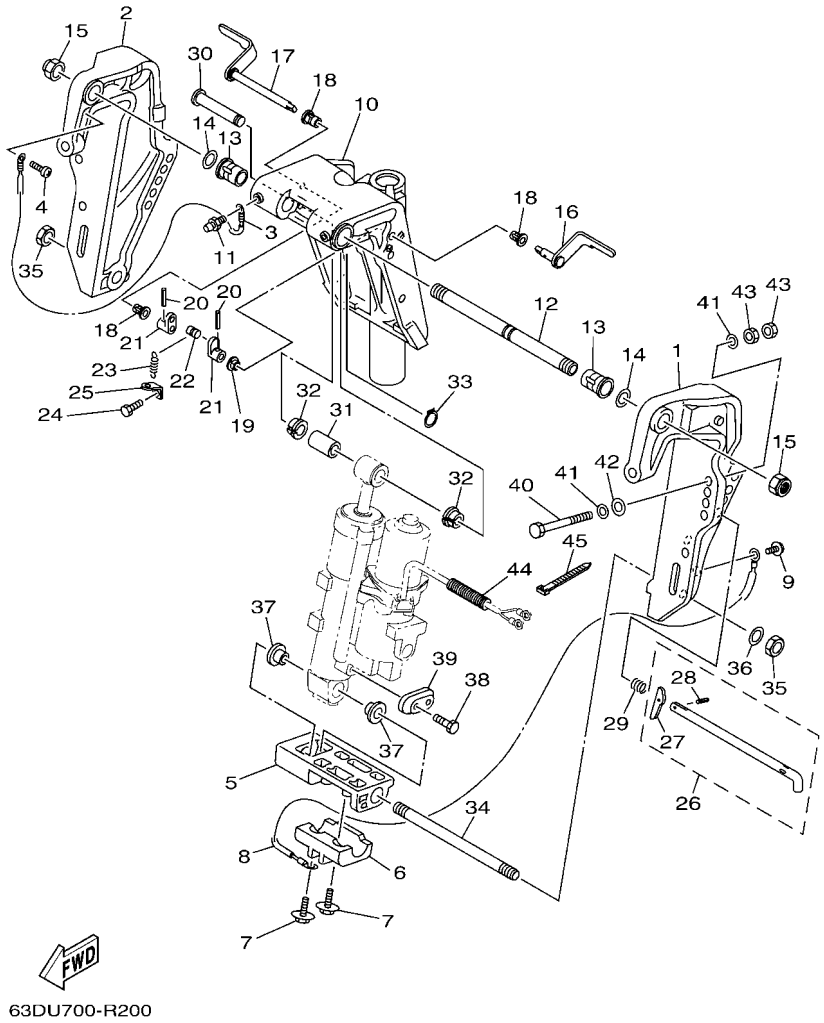

REF. NO.	PART NO. N° PIECES	DESCRIPTION DESCRIPTION	ETO	EO	MHO			REMARKS REMARQUES
1	63D–43111–01–8D	BRACKET, CLAMP 1 PRESSE 1	1					
2	63D–43112–01–8D	BRACKET, CLAMP 2 PRESSE 2	1					
3	63D–82148–00	WIRE, LEAD 4 FIL 4	1					
4	97885–06008	SCREW, PAN HEAD VIS, A ENCOCHE	1					
5	63D–43128–01–8D	SPACER, CLAMP BRACKET ENTRETOISE	1					
6	63D–45251–01	ANODE ANODE	1					
7	97E95–06525	BOLT, HEXAGON W/W DEEP RECESS VIS HEXAGONAL AVC RONDELLE	2					
8	6H1–82148–00	WIRE, LEAD 4 FIL 4	1					
9	97E95–06510	BOLT, HEXAGON W/W DEEP RECESS VIS HEXAGONAL AVC RONDELLE	1					
10	63D–43311–13–8D	BRACKET, SWIVEL 1 SUPPORT, PIVOT 1	1					L(21.0") L(21.0")
11	93700–06M03	NIPPLE, GREASE PION	3					
12	63D–43131–01	BOLT, CLAMP BRACKET BOULON, PRESSE	1					
13	90386–22M15	BUSH DOUILLE	2					
14	90201–22M03	WASHER, PLATE RONDELLE, PLATE	2					
15	90185–22043	NUT, SELF-LOCKING ECROU,AUTO-BLOQUANT	2					
16	6H5–43181–03	LEVER, TILT STOP 1 LEVIER VERROUILLAGE RELEVAGE 1	1					
17	6H5–43185–03	LEVER, TILT STOP 2 LEVIER VERROUILLAGE RELEVAGE 2	1					
18	90386–10M16	BUSH DOUILLE	3					
19	90386–10025	BUSH DOUILLE	1					
20	91690–30020	PIN, SPRING AGRAFFE	2					
21	6G5–43148–00	COLLAR, DISTANCE ENTRETOISE	2					
22	90249–06M19	PIN GOUPILLE	1					
23	90506–14M24	SPRING, TENSION RESSORT, TENSION	1					
24	97D95–06010	BOLT, HEXAGON DEEP RECESS VIS HEXAGONAL	1					
25	6G5–43144–00	HOOK, SPRING CROCHET	1					
26	688–43160–01	TILT ROD ASSY BROCHE D'INCLINAISON (ENS.)	1					
27	688–43165–00	.PLATE, TILT LOCK .TAQUET, BROCHE INCLINAISON	1					

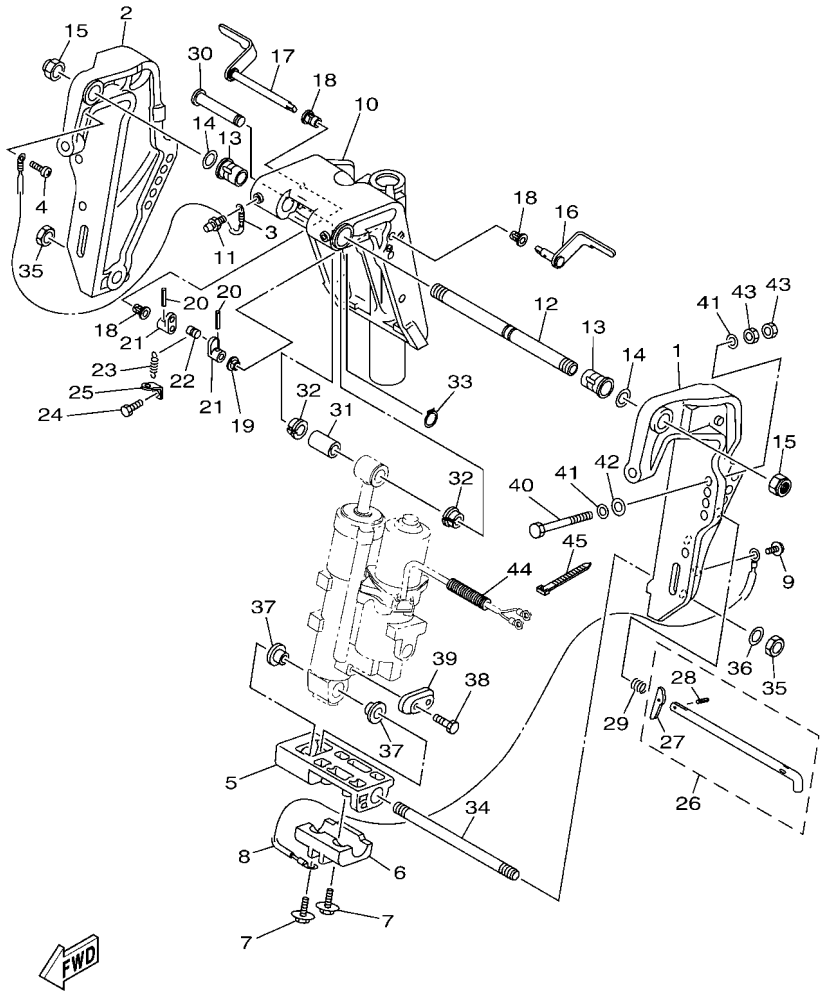

63DU700-R200

FIG. 20 BRACKET 1 — SUPPORT 1

REF. NO.	PART NO. N° PIECES	DESCRIPTION DESCRIPTION	ETO	EO	MHO			REMARKS REMARQUES
28	91690–30012	.PIN, SPRING .AGRAFFE	1					
29	90502–16M02	SPRING, CONICAL RESSORT, CONIQUE	1					
30	6E5–43126–02	PIN, UPPER SHOCK MOUNT AXE, SUPERIEUR AMORTISSEUR	1					
31	90386–18M92	BUSH DOUILLE	1					
32	90386–18M35	BUSH DOUILLE	2					
33	93410–18M05	CIRCLIP CIRCLIP	1					
34	90116–18M52	BOLT, STUD GOUJON	1					
35	90170–18M10	NUT ECROU	2					
36	92995–18600	WASHER RONDELLE	1					
37	90386–18M44	BUSH DOUILLE	2					
38	90101–06020	BOLT BOULON	2					
39	65W–45251–00	ANODE ANODE	1					
40	90101–12063	BOLT (L:105MM) BOULON (L:105MM)	4					
41	90201–12062	WASHER, PLATE RONDELLE, PLATE	8					
42	90201–12426	WASHER, PLATE RONDELLE, PLATE	4					
43	95380–12600	NUT ECROU	8					
44	90440–14M00	PIPE DURITE	1					
45	90465–11M10	CLAMP BRIDE	3					

FIG. 21 BRACKET 2 — SUPPORT 2

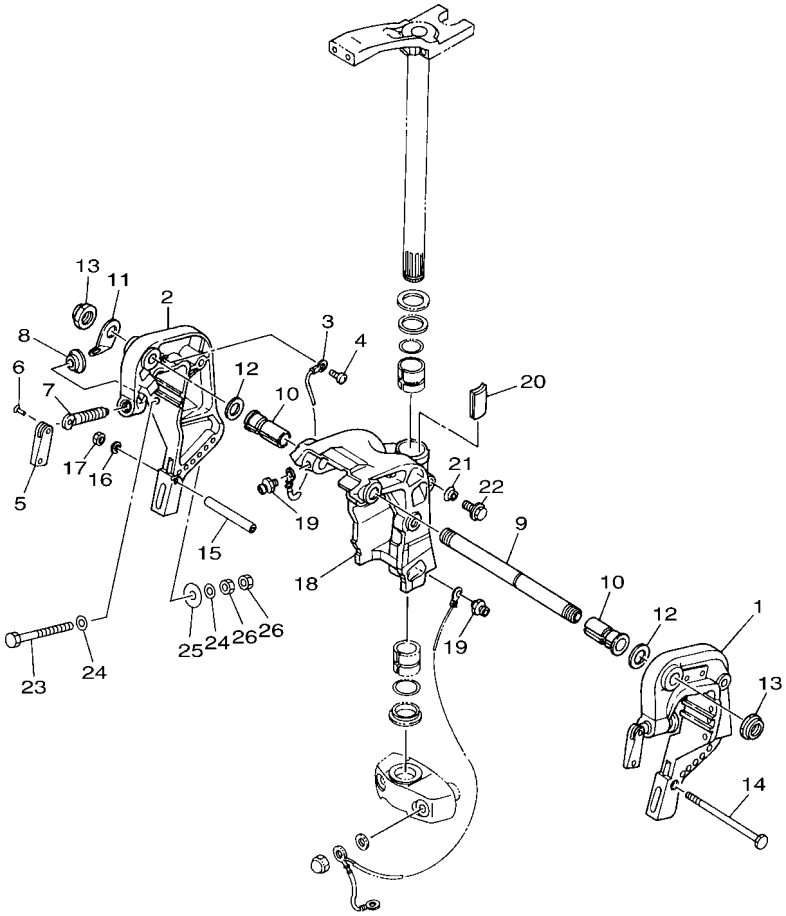

63DL100-K210

REF. NO.	PART NO. N° PIECES	DESCRIPTION DESCRIPTION	ETO	EO	MHO			REMARKS REMARQUES
1	6H4–43111–05–8D	BRACKET, CLAMP 1 PRESSE 1		1	1			
2	6H4–43112–04–8D	BRACKET, CLAMP 2 PRESSE 2		1	1			
3	6E5–82148–00	WIRE, LEAD 4 FIL 4		1	1			
4	97885–06008	SCREW, PAN HEAD VIS, A ENCOCHE		1	1			
5	6E0–43118–01	HANDLE, TRANSOM CLAMP POIGNEE DE VIS DE PRESSE		2	2			
6	90243–04M01	PIN GOUPILLE		2	2			
7	90149–14M12	SCREW VIS		2	2			
8	648–43114–01	PAD, TRANSOM CLAMP RONDELLE D'APPUI		2	2			
9	63D–43131–01	BOLT, CLAMP BRACKET BOULON, PRESSE		1	1			
10	90386–22M69	BUSH DOUILLE		2	2			
11	6J8–43113–01	PLATE, CLAMP BRACKET PLAQUETTE, PRESSE		1	1			
12	90201–22M03	WASHER, PLATE RONDELLE, PLATE		2	2			
13	90185–22043	NUT, SELF-LOCKING ECROU,AUTO-BLOQUANT		2	2			
14	90101–08339	BOLT BOULON		1	1			
15	90387–08M03	COLLAR COLLERETTE		1	1			
16	92990–08600	WASHER, PLATE RONDELLE, PLATE		1	1			
17	95380–08600	NUT ECROU		1	1			
18	6J8–43311–04–8D	BRACKET, SWIVEL 1 SUPPORT, PIVOT 1		1	1			S(16.0") S(16.0")
	6J8–43311–10–8D	BRACKET, SWIVEL 1 SUPPORT, PIVOT 1		1	1			L(21.0") L(21.0")
19	93700–06M03	NIPPLE, GREASE PION		3	3			
20	6J8–42528–00	PLATE, FRICTION PLAQUE, FRICTION		1	1			
21	689–43373–01	SEAL, DAMPER JOINT		1	1			
22	90105–06M18	BOLT, FLANGE BOULON, A COLLERETTE		1	1			
23	90101–10047	BOLT BOULON		4	4			
24	92995–10600	WASHER RONDELLE		8	8			
25	90201–12426	WASHER, PLATE RONDELLE, PLATE		4	4			
26	95380–10600	NUT ECROU		8	8			

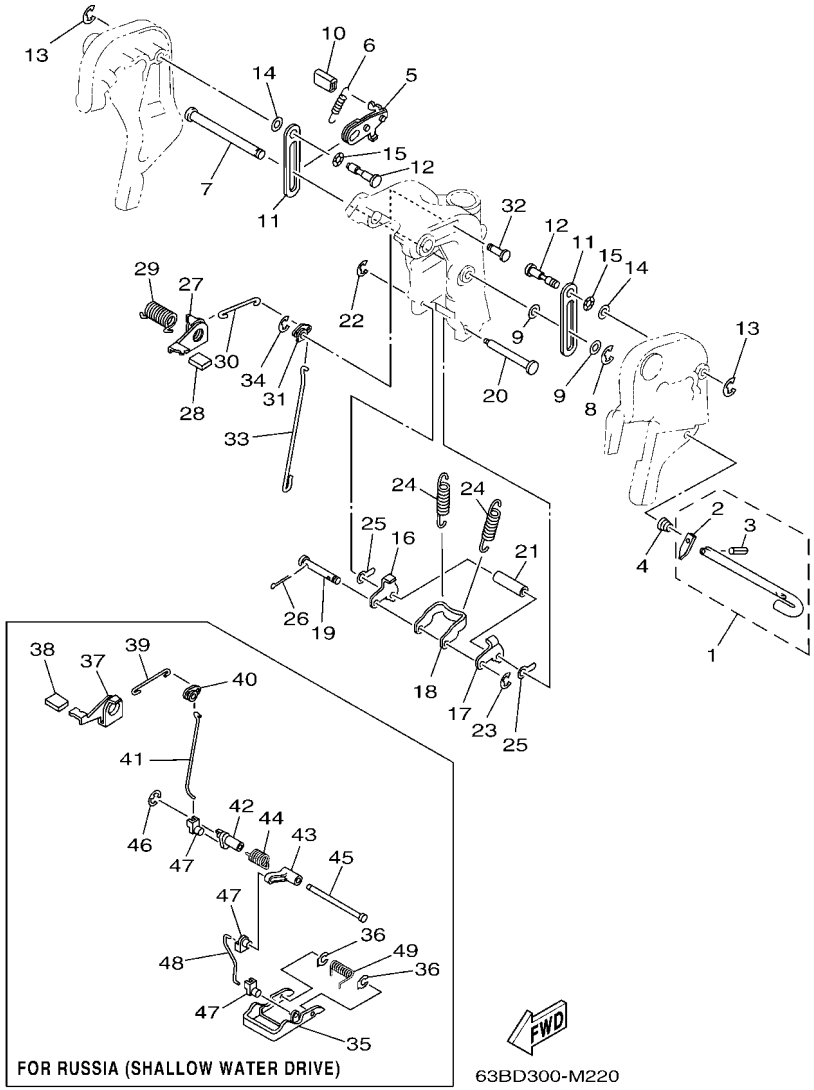

FIG. 22 BRACKET 3 SUPPORT 3

REF. NO.	PART NO. N° PIECES	DESCRIPTION DESCRIPTION	ETO	EO	MHO			REMARKS REMARQUES
1	6H4–43160–01	TILT ROD ASSY BROCHE D'INCLINAISON (ENS.)		1	1			
2	676–43165–00	.PLATE, TILT LOCK .TAQUET, BROCHE INCLINAISON		1	1			
3	91690–30010	.PIN, SPRING .AGRAFFE		1	1			
4	90502–10M04	SPRING, CONICAL RESSORT, CONIQUE		1	1			
5	6J8–43181–01	LEVER, TILT STOP 1 LEVIER VERROUILLAGE RELEVAGE 1		1	1			
6	90506–12M25	SPRING, TENSION RESSORT, TENSION		1	1			
7	90249–12M28	PIN GOUPILLE		1	1			
8	99080–10600	CIRCLIP CIRCLIP		1	1			
9	90202–12031	WASHER, PLATE RONDELLE, PLATE		2	2			
10	682–43318–01	COVER CAPUCHON		1	1			
11	6J8–43627–00	STOPPER PLAQUETTE		2	2			
12	90249–12M27	PIN GOUPILLE		2	2			
13	99080–10600	CIRCLIP CIRCLIP		2	2			
14	90202–12031	WASHER, PLATE RONDELLE, PLATE		2	2			
15	90206–12M16	WASHER, WAVE RONDELLE, ONDULEE		2	2			
16	6J8–43614–00	PLATE, TILT LOCK ETRIER, VERROUILLAGE MARCHE AR		1	1			
17	6J8–43615–00	PLATE, TILT LOCK ETRIER, VERROUILLAGE MARCHE AR		1	1			
18	6J8–43613–01	ARM, TILT LOCK GUIDE		1	1			
19	6H4–43659–00	SHAFT, REVERSE LOCK AXE, VERROUILLAGE MARCHE AR		1	1			
20	6J8–43611–01	SHAFT, TILT LOCK AXE, VERROUILLAGE MARCHE AR		1	1			
21	90387–07M64	COLLAR COLLERETTE		1	1			
22	93430–06M02	CIRCLIP CLIPS		1	1			
23	99080–05600	CIRCLIP CIRCLIP		1	1			
24	90506–32M22	SPRING, TENSION RESSORT, TENSION		2	2			
25	6H4–43674–00	WASHER RONDELLE		2	2			EXCEPT FOR RUS EXCEPT FOR RUS
26	91490–20010	PIN. COTTER GOUPILLE		2	2			
27	6J8–43631–00	LEVER, TILT LEVIER, INCLINAISON		1	1			

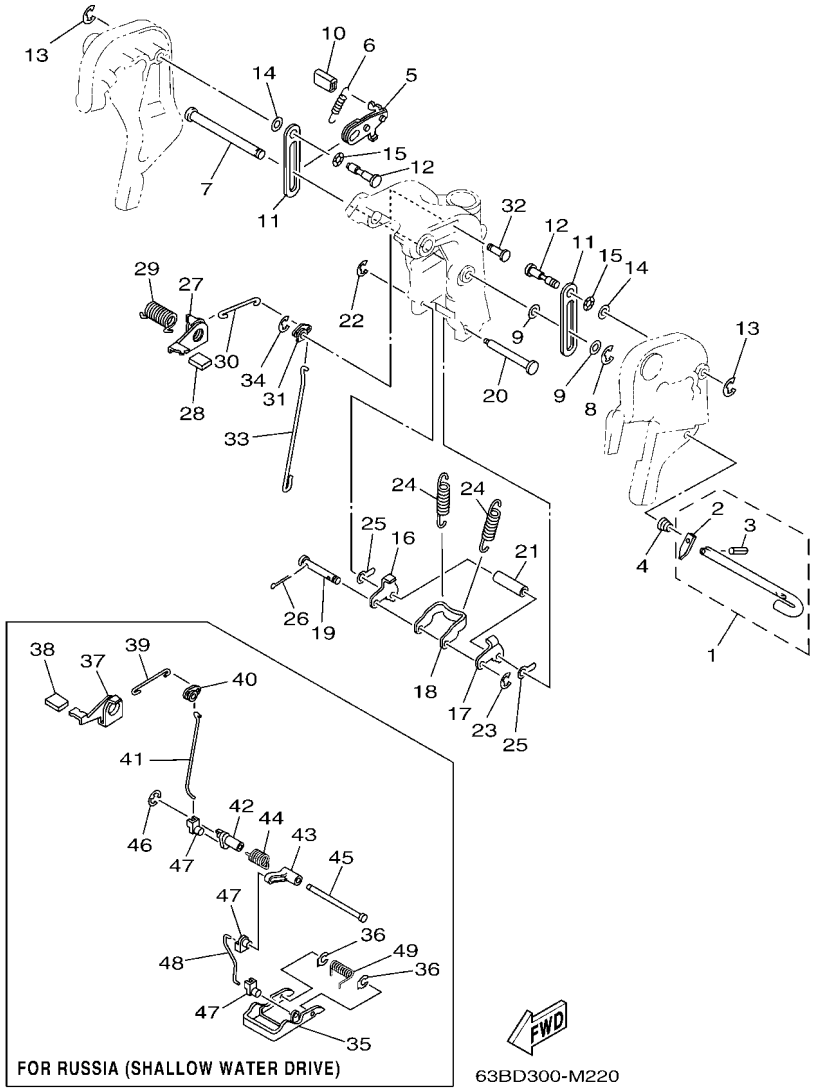

FIG. 22 BRACKET 3 — SUPPORT 3

REF. NO.	PART NO. N° PIECES	DESCRIPTION DESCRIPTION	ETO	EO	MHO			REMARKS REMARQUES
28	6J8–43633–00	COVER, TILT LEVER COUVERCLE		1	1			
29	90508–18M24	SPRING, TORSION RESSORT, TORSION		1	1			EXCEPT FOR RUS EXCEPT FOR RUS
	90508–18M23	SPRING, TORSION RESSORT, TORSION		1				FOR RUS FOR RUS
30	6H4–43616–00	ROD, TILT LOCK TIGE		1	1			
31	6J8–43641–00	LEVER, TILT LEVIER, INCLINAISON		1	1			
32	90249–06M23	PIN GOUPILLE		1	1			EXCEPT FOR RUS EXCEPT FOR RUS
	90249–06M24	PIN GOUPILLE		1				FOR RUS FOR RUS
33	6J8–43617–00	ROD, TILT LOCK TIGE		1	1			
34	99080–05600	CIRCLIP CIRCLIP		1	1			
35	6J8–43681–01	LEVER, SHALLOW WATER DRIVE 1 LEVIER, PEU PROFOND D'EAU 1		1				FOR RUS FOR RUS
36	6J8–43673–00	WASHER 1 RONDELLE		2				FOR RUS FOR RUS
37	6J8–43631–10	LEVER, TILT LEVIER, INCLINAISON		1				FOR RUS FOR RUS
38	6J8–43633–00	COVER, TILT LEVER COUVERCLE		1				FOR RUS FOR RUS
39	6H4–43616–00	ROD, TILT LOCK TIGE		1				FOR RUS FOR RUS
40	6J8–43641–00	LEVER, TILT LEVIER, INCLINAISON		1				FOR RUS FOR RUS
41	6J8–43617–10	ROD, TILT LOCK TIGE		1				FOR RUS FOR RUS
42	6J8–43186–00	LEVER LEVIER		1				FOR RUS FOR RUS
43	6J8–43187–00	LEVER 2 LEVIER		1				FOR RUS FOR RUS
44	90508–25M21	SPRING, TORSION RESSORT, TORSION		1				FOR RUS FOR RUS
45	90249–07M25	PIN GOUPILLE		1				FOR RUS FOR RUS
46	99080–05600	CIRCLIP CIRCLIP		1				FOR RUS FOR RUS
47	6J8–41262–00	JOINT, CHOKE LEVER RACCORD, LEVIER DE STARTER		3				FOR RUS FOR RUS
48	6J8–43616–10	ROD, TILT LOCK TIGE		1				FOR RUS FOR RUS
49	90508–20M22	SPRING, TORSION RESSORT, TORSION		1				FOR RUS FOR RUS

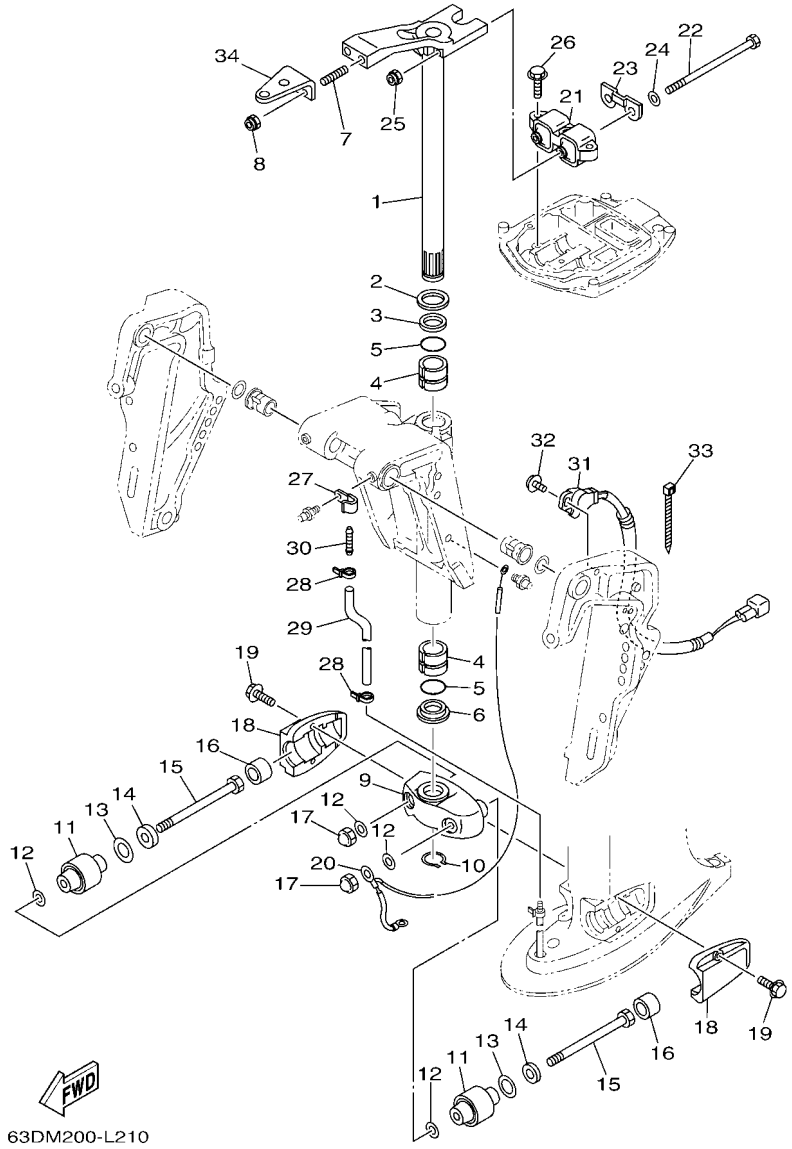

FIG. 23 BRACKET 4 — SUPPORT 4

REF. NO.	PART NO. N° PIECES	DESCRIPTION DESCRIPTION	ETO	EO	MHO			REMARKS REMARQUES
1	63D–42510–12–8D	STEERING BRACKET ASSY DIRECTION SUPPORT (ENS.)	1					L(21.0") L(21.0")
2	90201–30M00	WASHER, PLATE RONDELLE, PLATE	1					
3	90386–30M78	BUSH DOUILLE	1					
4	90386–30M77	BUSH DOUILLE	2					
5	93210–29M94	O-RING JOINT TORIQUE	2					
6	90386–30M60	BUSH DOUILLE	1					
7	90116–10062	BOLT, STUD GOUJON	2					
8	90185–10027	NUT, SELF-LOCKING ECROU,AUTO-BLOQUANT	2					
9	63D–44551–01–8D	HOUSING, LOWER MOUNT RUBBER 1 BOITIER, SILENT-BLOC INFERIEUR	1					
10	93410–28M06	CIRCLIP CIRCLIP	1					
11	63D–44555–00	MOUNT DAMPER, LOWER SIDE SILENT-BLOC, INFERIEUR LATERAL	2					L(21.0") L(21.0")
12	90201–12M16	WASHER, PLATE RONDELLE, PLATE	4					
13	90202–25M04	WASHER, PLATE RONDELLE, PLATE	2					
14	90201–13M19	WASHER, PLATE RONDELLE, PLATE	2					
15	90109–12M21	BOLT BOULON	2					
16	663–44575–00	DAMPER, LOWER MOUNT RUBBER SILENT-BLOC, INFERIEUR	2					
17	95380–12800	NUT, CROWN ECROU, BORGNE	2					
18	63D–44552–01–8D	HOUSING, LOWER MOUNT RUBBER 2 BOITIER, SILENT-BLOC INFERIEUR	2					
19	97E75–08530	BOLT, HEXAGON W/W DEEP RECESS VIS HEXAGONAL AVC RONDELLE	4					
20	63D–82127–10	WIRE, LEAD 2 FIL 2	1					L(21.0") L(21.0")
21	63D–44514–01	MOUNT DAMPER, UPPER SIDE SILENT-BLOC, SUPERIEUR LATERAL	1					
22	90109–08229	BOLT BOULON	2					
23	63D–44526–00	PLATE PLAQUE	1					
24	90201–09425	WASHER, PLATE RONDELLE, PLATE	2					
25	90185–08018	NUT, SELF-LOCKING ECROU,AUTO-BLOQUANT	2					
26	97E75–08530	BOLT, HEXAGON W/W DEEP RECESS VIS HEXAGONAL AVC RONDELLE	3					
27	90465–06M86	CLAMP BRIDE	1					

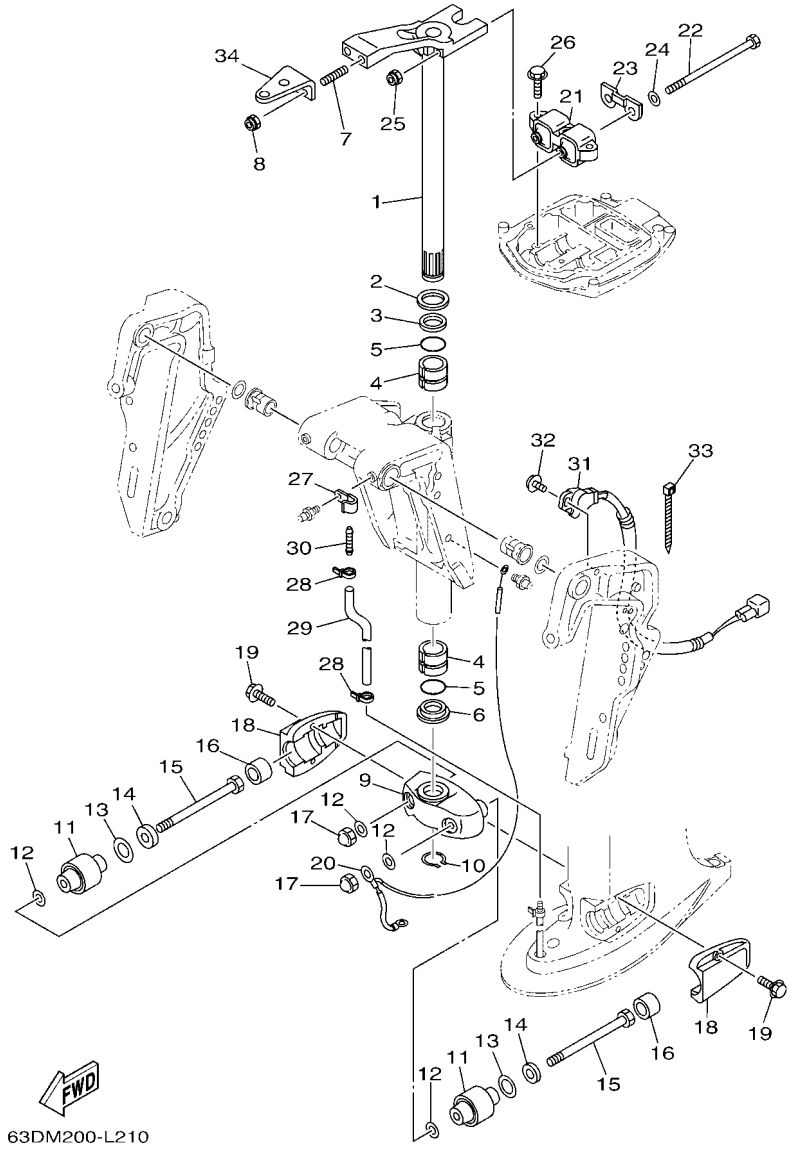

FIG. 23 BRACKET 4 — SUPPORT 4

REF. NO.	PART NO. N° PIECES	DESCRIPTION DESCRIPTION	ETO	EO	MHO			REMARKS REMARQUES
28	90465–11M10	CLAMP BRIDE	2					
29	90445–07MF1	HOSE (L570) DURITE (L570)	1					
30	6E5–83558–00	END, NIPPLE RACCORD DE NIPPLE	1					
31	63D–83672–11	TRIM SENDER INCLINER RACCORD	1					
32	97985–06216	SCREW, WITH WASHER VIS, AVEC RONDELLE	2					
33	90465–13M11	CLAMP BRIDE	1					
34	63D–48511–01	HOOK, STEERING ATTACHE, DIRECTION	1					STEERING GUIDE STEERING GUIDE

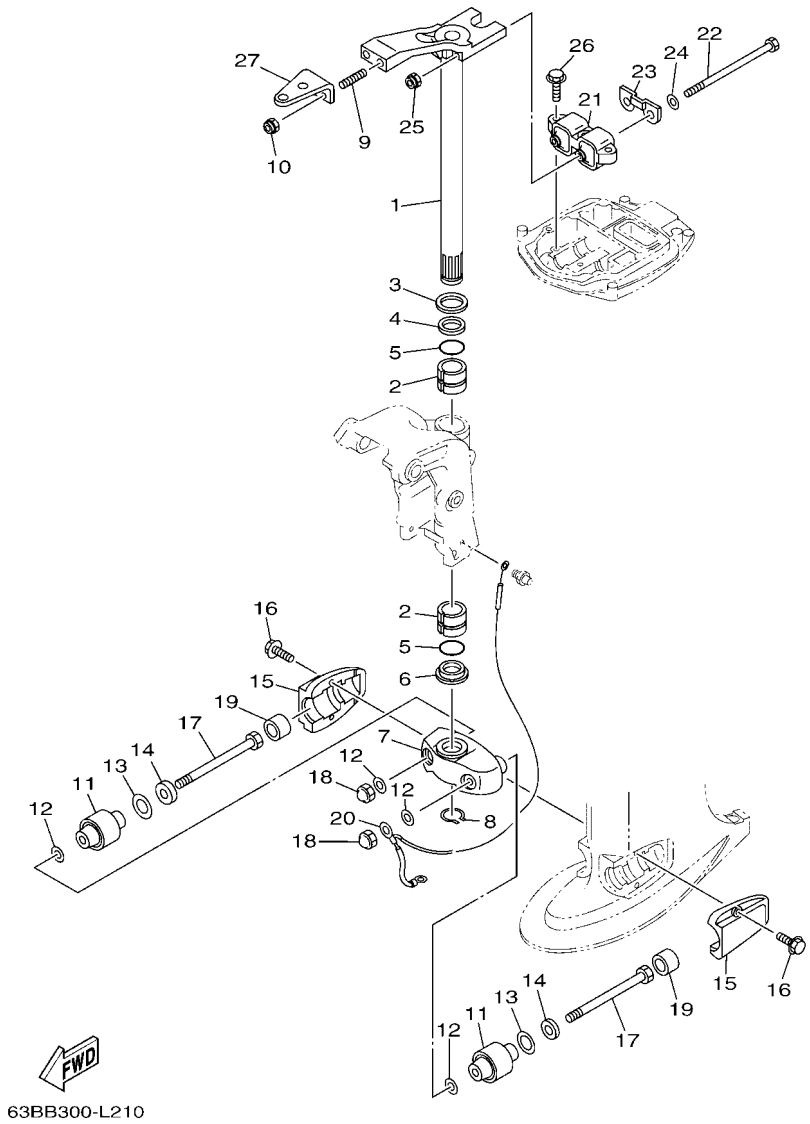

FIG. 24 BRACKET 5 — SUPPORT 5

REF. NO.	PART NO. N° PIECES	DESCRIPTION DESCRIPTION	ETO	EO	MHO			REMARKS REMARQUES
1	63B–42510–01–8D	STEERING BRACKET ASSY DIRECTION SUPPORT (ENS.)		1	1			S(16.0") S(16.0")
	63B–42510–11–8D	STEERING BRACKET ASSY DIRECTION SUPPORT (ENS.)		1	1			L(21.0") L(21.0")
2	90386–30M77	BUSH DOUILLE		2	2			
3	90201–30M00	WASHER, PLATE RONDELLE, PLATE		1	1			
4	90386–30M78	BUSH DOUILLE		1	1			
5	93210–29M94	O-RING JOINT TORIQUE		2	2			
6	90386–30M60	BUSH DOUILLE		1	1			
7	63D–44551–01–8D	HOUSING, LOWER MOUNT RUBBER 1 BOITIER, SILENT-BLOC INFERIEUR		1	1			
8	93410–28M06	CIRCLIP CIRCLIP		1	1			
9	90116–10062	BOLT, STUD GOUJON		2	2			
10	90185–10027	NUT, SELF-LOCKING ECROU,AUTO-BLOQUANT		2	2			
11	687–44555–00	MOUNT DAMPER, LOWER SIDE SILENT-BLOC, INFERIEUR LATERAL		2	2			S(16.0") S(16.0")
	63D–44555–00	MOUNT DAMPER, LOWER SIDE SILENT-BLOC, INFERIEUR LATERAL		2	2			L(21.0") L(21.0")
12	90201–12M16	WASHER, PLATE RONDELLE, PLATE		4	4			
13	90202–25M04	WASHER, PLATE RONDELLE, PLATE		2	2			
14	90201–13M19	WASHER, PLATE RONDELLE, PLATE		2	2			
15	63D–44552–01–8D	HOUSING, LOWER MOUNT RUBBER 2 BOITIER, SILENT-BLOC INFERIEUR		2	2			
16	97E75–08530	BOLT, HEXAGON W/W DEEP RECESS VIS HEXAGONAL AVC RONDELLE		4	4			
17	90109–12M21	BOLT BOULON		2	2			
18	95380–12800	NUT, CROWN ECROU, BORGNE		2	2			
19	663–44575–00	DAMPER, LOWER MOUNT RUBBER SILENT-BLOC, INFERIEUR		2	2			
20	63D–82127–00	WIRE, LEAD 2 FIL 2		1	1			S(16.0") S(16.0")
	63D–82127–10	WIRE, LEAD 2 FIL 2		1	1			L(21.0") L(21.0")
21	63D–44514–01	MOUNT DAMPER, UPPER SIDE SILENT-BLOC, SUPERIEUR LATERAL		1	1			
22	90109–08229	BOLT BOULON		2	2			
23	63D–44526–00	PLATE PLAQUE		1	1			
24	90201–09425	WASHER, PLATE RONDELLE, PLATE		2	2			

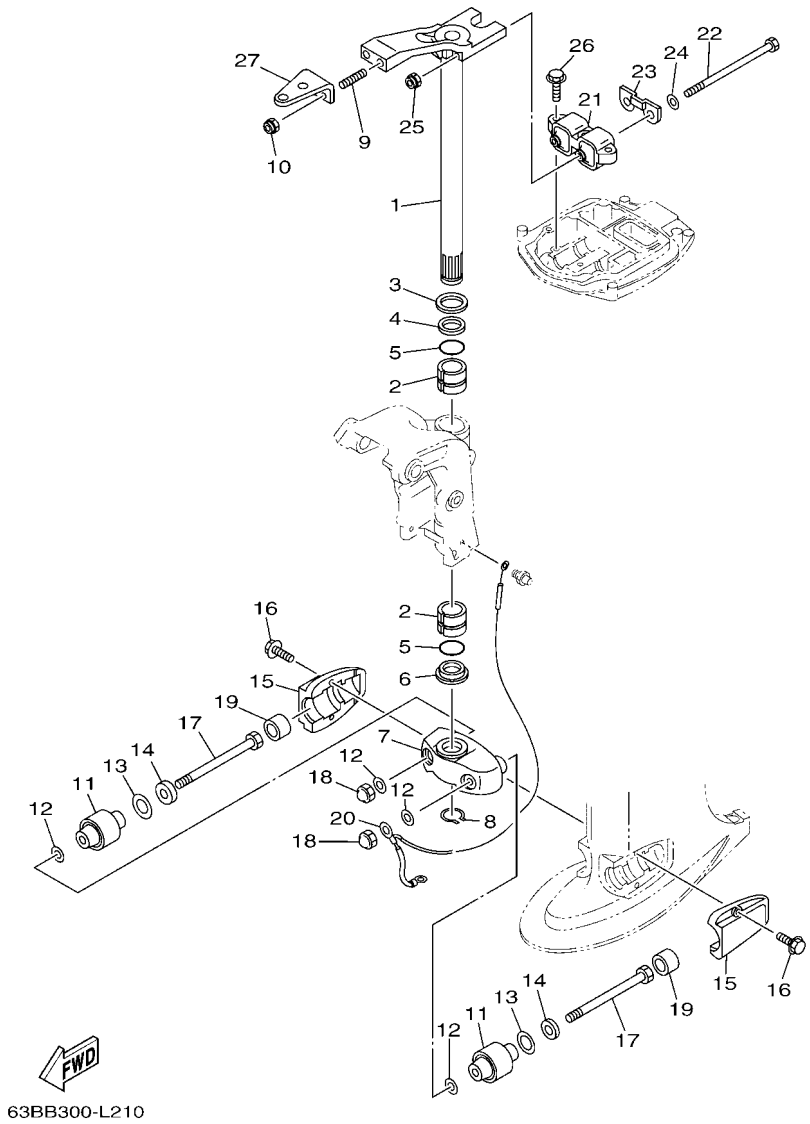

FIG. 24 BRACKET 5 — SUPPORT 5

REF. NO.	PART NO. N° PIECES	DESCRIPTION DESCRIPTION	ETO	EO	MHO			REMARKS REMARQUES
25	90185–08018	NUT, SELF-LOCKING ECROU,AUTO-BLOQUANT		2	2			
26	97E75–08530	BOLT, HEXAGON W/W DEEP RECESS VIS HEXAGONAL AVC RONDELLE		3	3			
27	63D–48511–01	HOOK, STEERING ATTACHE, DIRECTION		1				STEERING GUIDE STEERING GUIDE

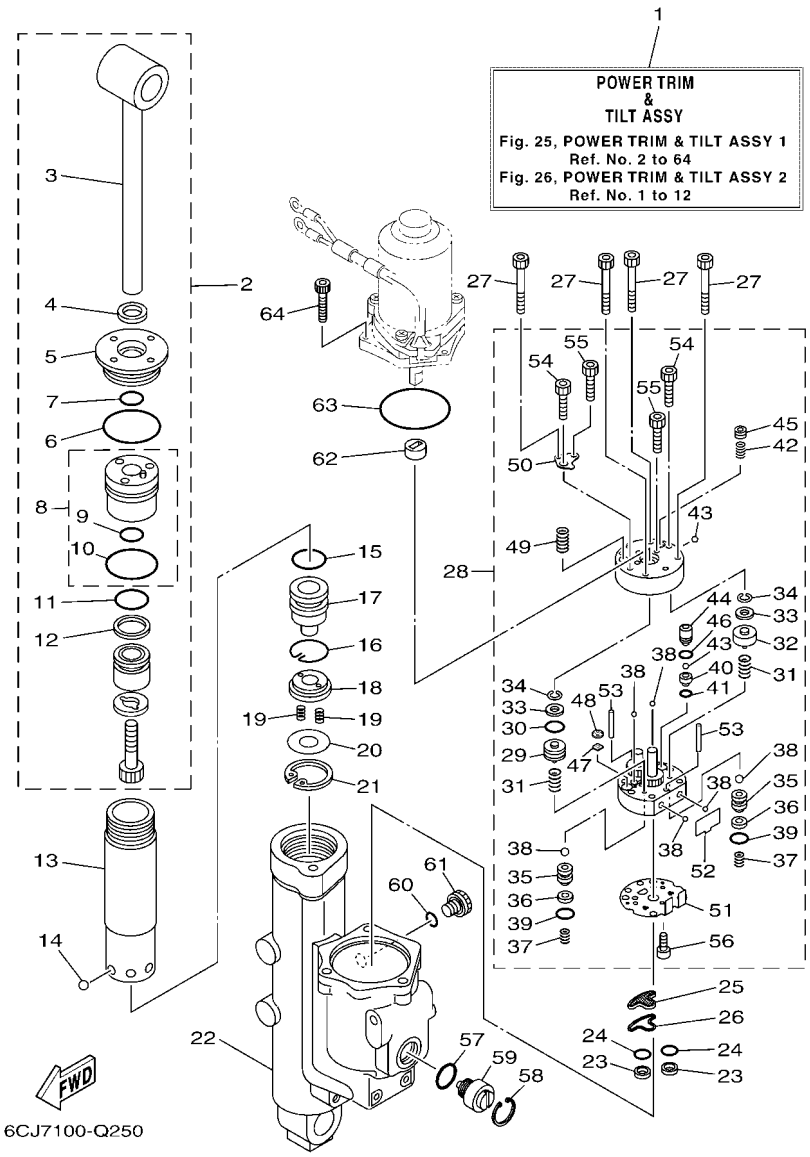

FIG. 25 POWER TRIM & TILT ASSY 1 — PUISSANCE PARER ET INCLINER 1

REF. NO.	PART NO. N° PIECES	DESCRIPTION DESCRIPTION	ETO	EO	MHO			REMARKS REMARQUES
1	62Y–43800–12	POWER TRIM & TILT ASSY PUISSANCE PARER ET INCLINER (E	1					
2	6CJ–43810–10	TILT PISTON SUB ASSY INCLINER PISTON AUXILIAIRE(ENS	1					
3	6CJ–43801–10	.ROD .TIGE	1					
4	62Y–43822–00	.SEAL, TRIM DUST .JOINT	1					
5	6CJ–43821–10	.SCREW, TRIM CYLINDER END .VIS	1					
6	93210–49001	.O-RING .JOINT TORIQUE	1					
7	6CJ–43863–00	.O-RING .JOINT TORIQUE	1					
8	6CJ–4380R–10	.CYLINDER END SUB ASSY .CYLINDRE RACCORD (ENS.)	1					
9	6CJ–43863–00	..O-RING ..JOINT TORIQUE	1					
10	93210–44006	..O-RING ..JOINT TORIQUE	1					
11	6C5–43861–00	.O-RING .JOINT TORIQUE	1					
12	6C5–43871–00	.RING, BACK UP .SEGMENT	1					
13	6CJ–22471–10	CYLINDER, SHOCK ABSORBER CYLINDRE, AMORTISSEUR	1					
14	93503–16003	BALL BILLES	6					
15	6C5–43861–00	O-RING JOINT TORIQUE	1					
16	6C5–43875–00	RING, SNAP RESSORT	1					
17	6CJ–4381B–10	FREE PISTON SUB ASSY PISTON AUXILIAIRE (ENS.)	1					
18	6C5–43899–00	PLATE STOPPER PLAQUETTE	1					
19	62X–4384H–00	SPRING RESSORT	2					
20	6C5–22435–00	PLATE, VALVE 2 PLAQUE, CLAPET 2	1					
21	99009–32500	CIRCLIP CIRCLIP	1					
22	62Y–4380K–11	CYLINDER, TILT SUB ASSY CYLINDRE	1					
23	6C5–43817–10	FILTER 2 FILTRE 2	2					
24	69J–4389J–00	O-RING JOINT TORIQUE	2					
25	6C5–43816–00	FILTER 1 FILTRE 1	1					
26	6C5–4380G–00	PLATE PLAQUE	1					
27	91318–05045	BOLT BOULON	4					

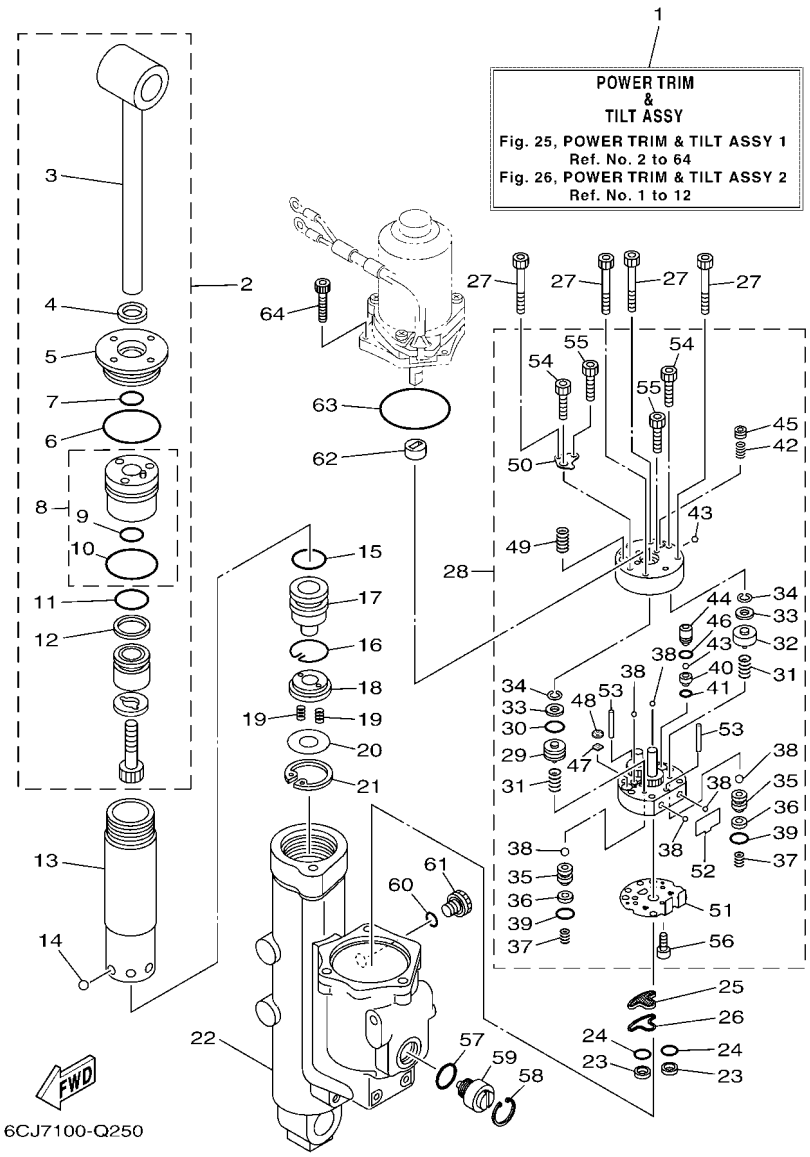

FIG. 25 POWER TRIM & TILT ASSY 1 — PUISSANCE PARER ET INCLINER 1

REF. NO.	PART NO. N° PIECES	DESCRIPTION DESCRIPTION	ETO	EO	MHO			REMARKS REMARQUES
28	6C5–43830–10	GEAR PUMP ASSY POMPE A PIGNON (ENS.)	1					
29	6D8–43841–00	.PISTON, SHUTTLE .PISTON	1					
30	6H1–43883–00	.O-RING .JOINT TORIQUE	1					
31	69J–43894–00	.SPRING, SHUTTLE RETURN .RESSORT	2					
32	6D8–4384M–00	.PISTON, SHUTTLE 2 .PISTON 2	1					
33	69A–4384F–00	.SEAL, MAIN VALVE .JOINT	2					
34	99002–03600	.CIRCLIP .CIRCLIP	2					
35	6EK–4382E–00	.ADAPTOR 2 .ADAPTEUR 2	2					
36	6C6–4387G–00	.WASHER .RONDELLE	2					
37	6C6–43853–00	.SPRING, MAIN VALVE .RESSORT	2					
38	93505–32038	.BALL .BILLE	6					
39	69J–4389J–00	.O-RING .JOINT TORIQUE	2					
40	6D8–43851–00	.SEAT, RELIEF VALVE .SIEGE	1					
41	93210–064A5	.O-RING .JOINT TORIQUE	1					
42	6C5–43855–10	.SPRING, UP RELIEF .RESSORT	1					
43	93501–08001	.BALL .BILLE	2					
44	6D8–43844–00	.PIN, VALVE SUPPORT .GOUPILLE	1					
45	6D8–43843–00	.SCREW, VALVE LOCK .VIS	1					
46	93210–04N51	.O-RING .JOINT TORIQUE	1					
47	6H1–4384G–11	.SEAL, RELIEF VALVE .JOINT	1					
48	6H1–43844–10	.PIN, VALVE SUPPORT .GOUPILLE	1					
49	6C5–43856–10	.SPRING, DOWN RELIEF .RESSORT	1					
50	6D8–4382L–00	.CAP, RELIEF VALVE .CAPUCHON	1					
51	6C5–43895–00	.SEAT, RELIEF VALVE .SIEGE	1					
52	6C5–43854–00	.SPRING, MANUAL RELEASE .RESSORT	1					
53	93604–26256	.PIN, DOWEL .CLAVETTE	2					
54	91318–05030	.BOLT .BOULON	2					

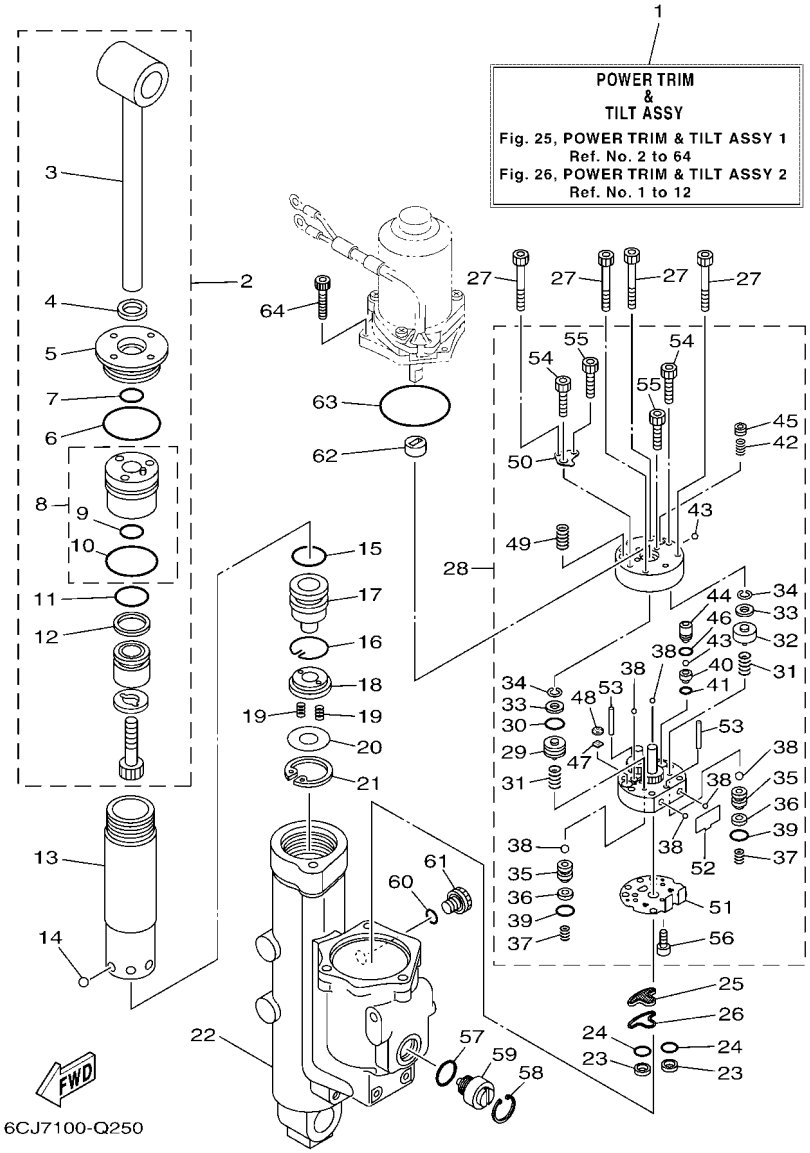

FIG. 25 POWER TRIM & TILT ASSY 1 — PUISSANCE PARER ET INCLINER 1

REF. NO.	PART NO. N° PIECES	DESCRIPTION DESCRIPTION	ETO	EO	MHO			REMARKS REMARQUES
55	91318–03025	.BOLT .BOULON	2					
56	91318–03005	.BOLT .BOULON	1					
57	6D8–43863–00	O-RING JOINT TORIQUE	1					
58	6H1–43875–00	RING, SNAP RESSORT	1					
59	6CJ–43845–10	SCREW, MANUAL RELEASE VIS	1					
60	6CJ–43861–10	O-RING JOINT TORIQUE	1					
61	6CJ–43829–10	PLUG, RESERVOIR BOUCHON	1					
62	6C5–43831–00	CONNECTOR, SHAFT RACCORD	1					
63	93210–64488	O-RING JOINT TORIQUE	1					
64	91380–05020	BOLT BOULON	3					

FIG. 26 POWER TRIM & TILT ASSY 2 — PUISSANCE PARER ET INCLINER 2

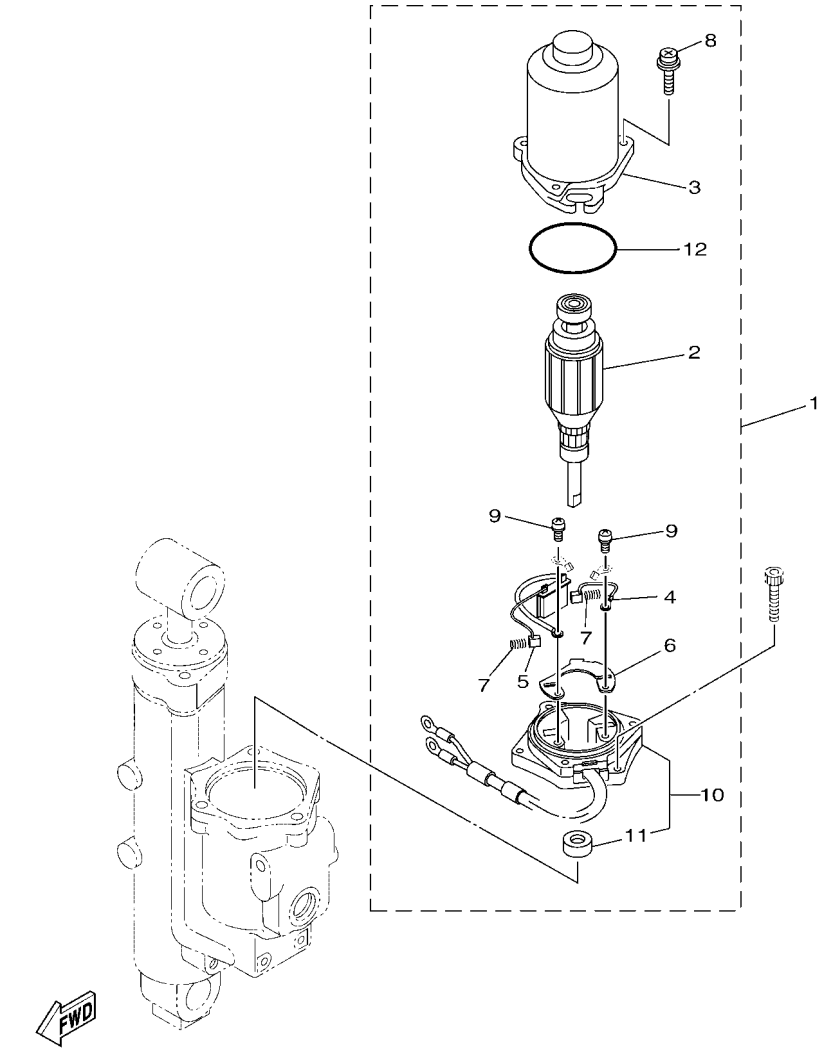

REF. NO.	PART NO. N° PIECES	DESCRIPTION DESCRIPTION	ETO	EO	MHO			REMARKS REMARQUES
1	62Y–43880–12	MOTOR ASSY MOTEUR (ENS.)	1					
2	6CJ–43805–11	.ARMATURE ASSY .INDUIT (ENS.)	1					
3	6CJ–43804–11	.STATOR ASSY .STATOR (ENS.)	1					
4	6EK–43892–00	.BRUSH 2 .BALAI 2	1					
5	6CJ–82181–10	.CIRCUIT BREAKER COMP. .RUPTEUR COMPLET	1					
6	6EK–4380F–00	.PLATE, BRUSH HOLDER .PLAQUE	1					
7	62X–4386K–00	.SPRING, BRUSH .RESSORT, BALAI	2					
8	6CJ–43879–10	.SCREW, WITH WASHER .VIS, AVEC RONDELLE	3					
9	97602–04316	.SCREW, PAN HEAD WITH WASHER .VIS, AVEC RONDELLE	2					
10	62Y–43881–10	.FRAME, END .BATI	1					
11	6EK–43882–00	..OIL SEAL ..JOINT SPI	1					
12	6CJ–43862–10	.O-RING .JOINT TORIQUE	1					

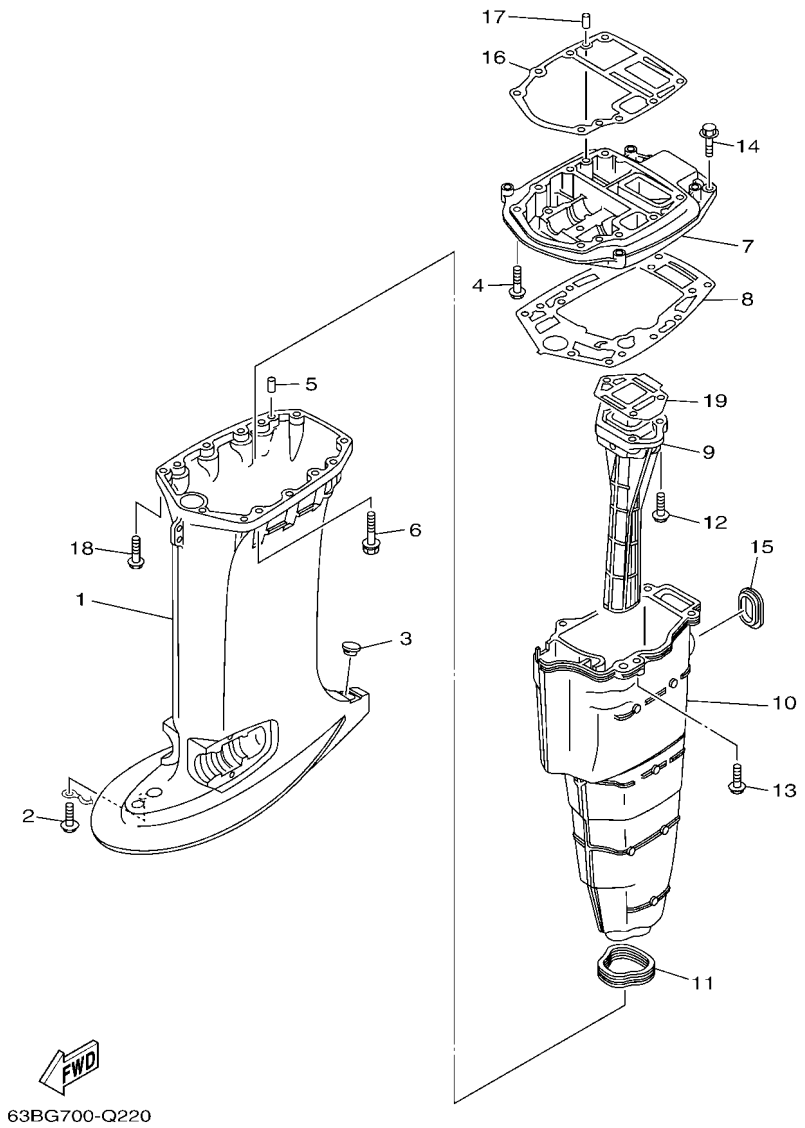

FIG. 27 UPPER CASING FOURREAU

REF. NO.	PART NO. N° PIECES	DESCRIPTION DESCRIPTION	ETO	EO	MHO			REMARKS REMARQUES
1	63D–45111–01–8D	CASING, UPPER FOURREAU		1	1			S(16.0") S(16.0")
	63D–45111–11–8D	CASING, UPPER FOURREAU	1	1	1			L(21.0") L(21.0")
2	97E95–06512	BOLT, HEXAGON W/W DEEP RECESS VIS HEXAGONAL AVC RONDELLE	1	1	1			
3	63D–45155–00	CAP CAPUCHON	1	1	1			
4	97E75–08545	BOLT, HEXAGON W/W DEEP RECESS VIS HEXAGONAL AVC RONDELLE	2	2	2			
5	93606–12019	PIN, DOWEL GOUPILLE	2	2	2			
6	90119–08M83	BOLT, WITH WASHER BOULON, AVEC RONDELLE	6	6	6			
7	63D–41137–01–CA	GUIDE, EXHAUST COLLECTEUR D'ECHAPPEMENT	1	1	1			
8	63D–45114–A0	GASKET, UPPER CASING JOINT, TUBE D'ARBRE	1	1	1			
9	6H5–41131–00–CA	MANIFOLD, EXT. 1 PIPE D'ECHAPPEMENT	1		1			50H 50H
	6H4–41131–01–CA	MANIFOLD, EXT. 1 PIPE D'ECHAPPEMENT		1	1			40V 40V
10	63D–14711–00–CA	MUFFLER 1 POT D'ECHAPPEMENT 1		1	1			S(16.0") S(16.0")
	63D–14711–11–CA	MUFFLER 1 POT D'ECHAPPEMENT 1	1	1	1			L(21.0") L(21.0")
11	63D–45123–00	GASKET, MUFFLER JOINT, POT DE DETENTE	1	1	1			
12	97E75–08530	BOLT, HEXAGON W/W DEEP RECESS VIS HEXAGONAL AVC RONDELLE	3	3	3			
13	97E75–08530	BOLT, HEXAGON W/W DEEP RECESS VIS HEXAGONAL AVC RONDELLE	4	4	4			
14	97E75–08530	BOLT, HEXAGON W/W DEEP RECESS VIS HEXAGONAL AVC RONDELLE	2	2	2			
15	6H3–45127–00	SEAL JOINT	1	1	1			
16	6H4–45113–A0	GASKET, UPPER CASING JOINT, TUBE D'ARBRE	1	1	1			
17	93606–12019	PIN, DOWEL GOUPILLE	2	2	2			
18	97E75–08545	BOLT, HEXAGON W/W DEEP RECESS VIS HEXAGONAL AVC RONDELLE	2	2	2			
19	6H4–41134–A0	GASKET, EXHAUST MANIFOLD JOINT, PIPE D'ECHAPPEMENT	1	1	1			

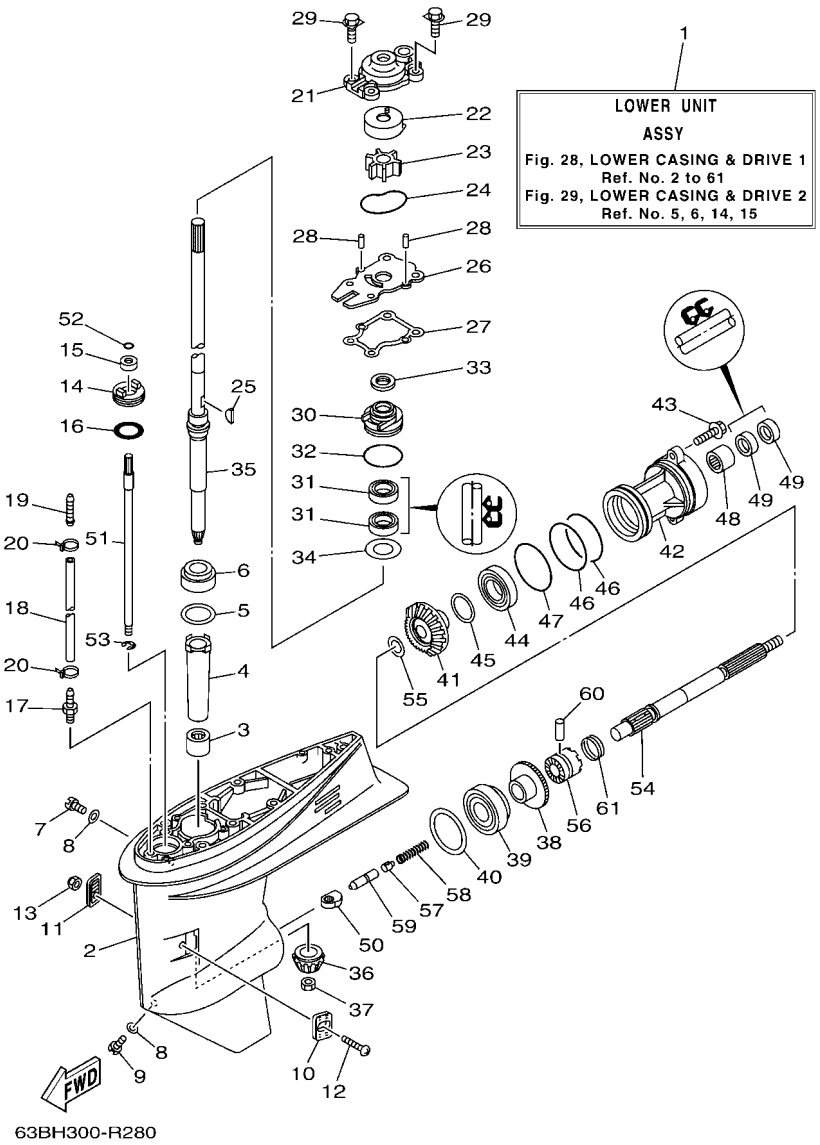

FIG. 28 LOWER CASING & DRIVE 1 — BOITIER D'HELICE TRANSMISSION1

REF. NO.	PART NO. N° PIECES	DESCRIPTION DESCRIPTION	ETO	EO	MHO			REMARKS REMARQUES
1	63D–45300–03–8D	LOWER UNIT ASSY UNITE INFERIEURE (ENS.)		1	1			S(16.0") S(16.0")
	63D–45300–13–8D	LOWER UNIT ASSY UNITE INFERIEURE (ENS.)	1	1	1			L(21.0") L(21.0")
2	63D–45301–03–8D	CASING, LOWER BEQUILLE	1	1	1			
3	93315–32224	BEARING ROULEMENT	1	1	1			
4	6H4–45536–00	SLEEVE, DRIVE SHAFT MANCHON, ARBRE MOTEUR	1	1	1			
5	663–45587–01	SHIM (T:0.10MM) CALE (T:0.10MM)	1	1	1			UR UR
	663–45587–10	SHIM (T:0.12MM) CALE (T:0.12MM)	1	1	1			UR UR
	663–45587–20	SHIM (T:0.15MM) CALE (T:0.15MM)	1	1	1			UR UR
	663–45587–30	SHIM (T:0.18MM) CALE (T:0.18MM)	1	1	1			UR UR
	663–45587–40	SHIM (T:0.30MM) CALE (T:0.30MM)	1	1	1			UR UR
	663–45587–50	SHIM (T:0.40MM) CALE (T:0.40MM)	1	1	1			UR UR
	663–45587–60	SHIM (T:0.50MM) CALE (T:0.50MM)	1	1	1			UR UR
6	93332–00001	BEARING ROULEMENT	1	1	1			
7	90340–08002	PLUG, STRAIGHT SCREW PLOT, FILETE DROIT	1	1	1			
8	90430–08003	GASKET JOINT	2	2	2			
9	688–45341–10	PLUG, DRAIN BOUCHON DE VIDANGE	1	1	1			
10	63D–45214–00	COVER, WATER INLET 1 GRILLE, ENTREE D'EAU 1	1	1	1			
11	63D–45215–00	COVER, WATER INLET 2 GRILLE, ENTREE D'EAU 2	1	1	1			
12	90152–05010	SCREW, COUNTERSUNK VIS, TETE NOYEE	1	1	1			
13	95380–05600	NUT ECROU	1	1	1			
14	63D–45321–00	PLATE PLAQUETTE	1	1	1			
15	93106–09014	OIL SEAL JOINT SPY	1	1	1			
16	93210–33MG4	O-RING JOINT TORIQUE	1	1	1			
17	6E5–45378–00	NIPPLE, HOSE RACCORD, TUYAU	1	1	1			
18	90445–07ME9	HOSE (L120) DURITE (L120)		1	1			S(16.0") S(16.0")
	90445–07M31	HOSE (L200) DURITE (L200)	1	1	1			L(21.0") L(21.0")
19	6E5–83558–10	END, NIPPLE RACCORD DE NIPPLE	1					

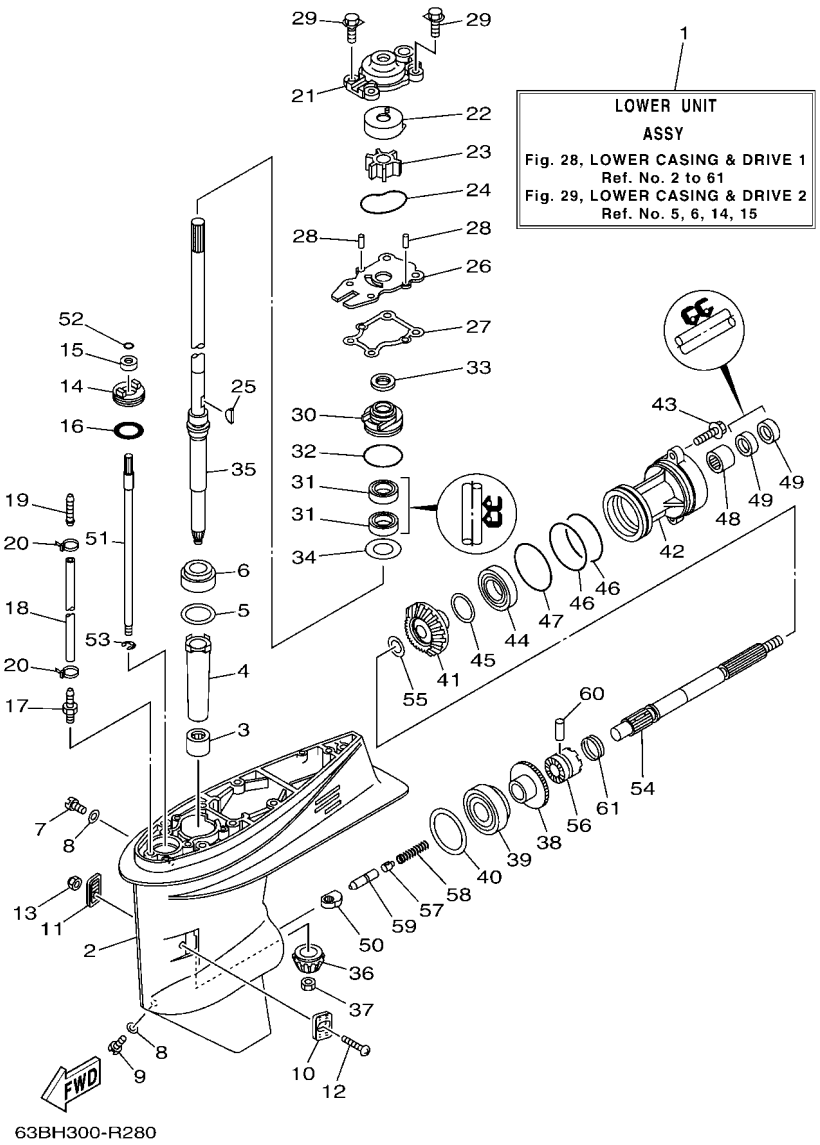

FIG. 28 LOWER CASING & DRIVE 1 — BOITIER D'HELICE TRANSMISSION1

REF. NO.	PART NO. N° PIECES	DESCRIPTION DESCRIPTION	ETO	EO	MHO			REMARKS REMARQUES
19	6E5–83558–00	END, NIPPLE RACCORD DE NIPPLE		1	1			
20	90465–11M10	CLAMP BRIDE	2	2	2			
21	63D–44311–00	HOUSING, WATER PUMP CORPS, POMPE A EAU	1	1	1			
22	63D–44322–00	INSERT, CARTRIDGE CUVETTE	1	1	1			
23	6H3–44352–00	IMPELLER TURBINE	1	1	1			
24	93210–59MG7	O-RING JOINT TORIQUE	1	1	1			
25	90280–03024	KEY, WOODRUFF CLAVETTE, DEMI-LUNE	1	1	1			
26	63D–44323–00	OUTER PLATE, CARTRIDGE PLAQUE EXTERIEURE	1	1	1			
27	63D–44316–00	GASKET, WATER PUMP JOINT, POMPE A EAU	1	1	1			
28	93604–08062	PIN, DOWEL CLAVETTE	2	2	2			
29	90119–08185	BOLT, WITH WASHER BOULON, AVEC RONDELLE	4	4	4			
30	6BG–44341–00	HOUSING, WATER PUMP CORPS, POMPE A EAU	1	1	1			
31	93101–25M57	OIL SEAL JOINT SPY	2	2	2			
32	93210–48001	O-RING JOINT TORIQUE	1	1	1			
33	63D–45344–00	COVER, OIL SEAL FLASQE, JOINT D'HUILE	1	1	1			
34	90201–27M00	WASHER, PLATE RONDELLE, PLATE	1	1	1			
35	63D–45501–00	DRIVE SHAFT COMP. ARBRE MOTEUR COMP.		1	1			S(16.0") S(16.0")
	63D–45501–10	DRIVE SHAFT COMP. ARBRE MOTEUR COMP.	1	1	1			L(21.0") L(21.0")
36	6H4–45551–01	PINION (13T) PIGNON D'ATTAQUE (13D)	1	1	1			
37	90170–12138	NUT ECROU	1	1	1			
38	6H4–45560–01	GEAR 1 (24T) PIGNON 1 (24T)	1	1	1			
39	93332–00003	BEARING ROULEMENT	1	1	1			
40	663–45567–01	SHIM (T:0.10MM) CALE (T:0.10MM)	1	1	1			UR UR
	663–45567–10	SHIM (T:0.12MM) CALE (T:0.12MM)	1	1	1			UR UR
	663–45567–20	SHIM (T:0.15MM) CALE (T:0.15MM)	1	1	1			UR UR
	663–45567–30	SHIM (T:0.18MM) CALE (T:0.18MM)	1	1	1			UR UR
	663–45567–40	SHIM (T:0.30MM) CALE (T:0.30MM)	1	1	1			UR UR

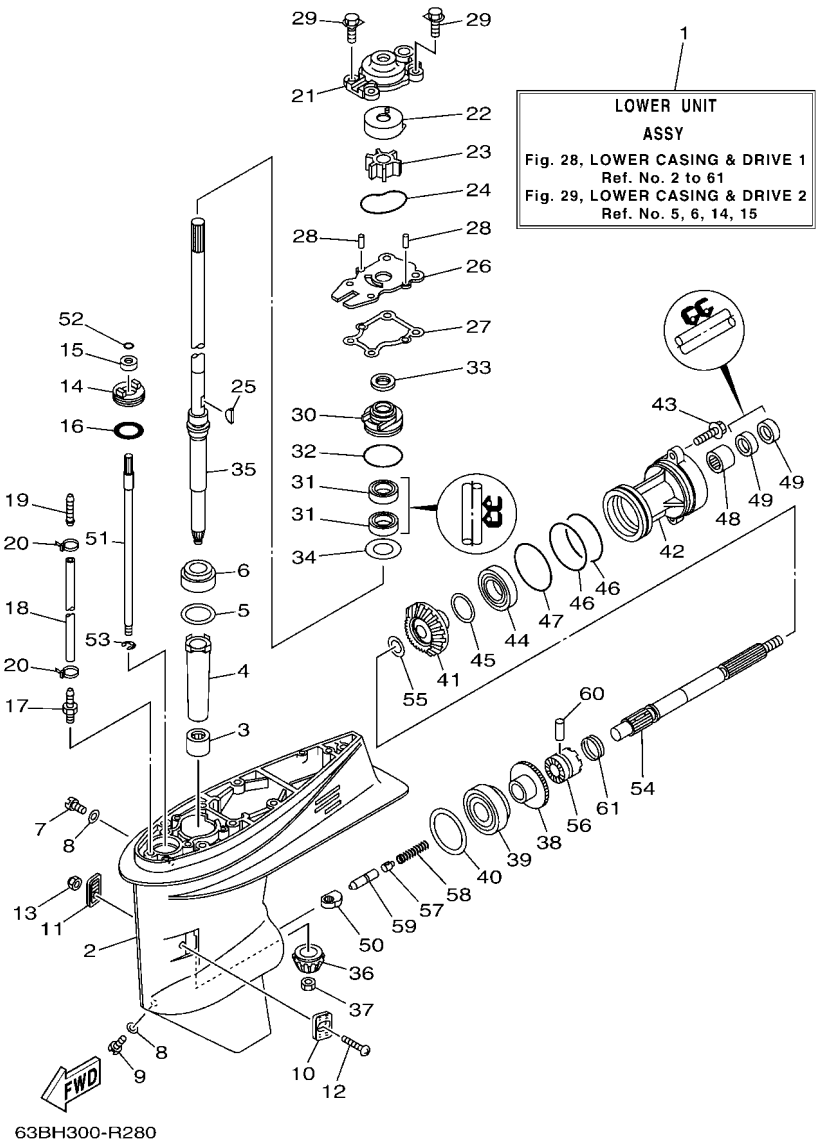

FIG. 28 LOWER CASING & DRIVE 1 — BOITIER D'HELICE TRANSMISSION1

REF. NO.	PART NO. N° PIECES	DESCRIPTION DESCRIPTION	ETO	EO	MHO			REMARKS REMARQUES
40	663–45567–50	SHIM (T:0.40MM) CALE (T:0.40MM)	1	1	1			UR UR
	663–45567–60	SHIM (T:0.50MM) CALE (T:0.50MM)	1	1	1			UR UR
41	6H4–45571–01	GEAR 2 (24T) PIGNON 2 (24T)	1	1	1			
42	63D–45361–02–8D	CAP, LOWER CASING COUVERCLE, BOITIER D'HELICE	1	1	1			
43	90105–08M61	BOLT, FLANGE BOULON, A COLLERETTE	2	2	2			
44	93306–001U1	BEARING ROULEMENT	1	1	1			
45	63D–45577–00	SHIM (T:0.10MM) CALE (T:0.10MM)	1	1	1			UR UR
	63D–45577–10	SHIM (T:0.12MM) CALE (T:0.12MM)	1	1	1			UR UR
	63D–45577–20	SHIM (T:0.15MM) CALE (T:0.15MM)	1	1	1			UR UR
	63D–45577–30	SHIM (T:0.18MM) CALE (T:0.18MM)	1	1	1			UR UR
	63D–45577–40	SHIM (T:0.30MM) CALE (T:0.30MM)	1	1	1			UR UR
	63D–45577–50	SHIM (T:0.40MM) CALE (T:0.40MM)	1	1	1			UR UR
	63D–45577–60	SHIM (T:0.50MM) CALE (T:0.50MM)	1	1	1			UR UR
46	93210–74MG5	O-RING JOINT TORIQUE	2	2	2			
47	93210–69MG6	O-RING JOINT TORIQUE	1	1	1			
48	93317–22204	BEARING ROULEMENT	1	1	1			
49	93101–22M00	OIL SEAL JOINT SPY	2	2	2			
50	663–44151–00	CAM, SHIFT CAME, INVERSION	1	1	1			
51	63D–44144–00	ROD, SHIFT 2 TIGE D'EMBRAYAGE 2	1	1	1			
52	93210–07003	O-RING JOINT TORIQUE	1	1	1			
53	99001–08600	CIRCLIP CIRCLIP	1	1	1			
54	63D–45611–00	SHAFT, PROPELLER ARBRE, HELICE	1	1	1			
55	90201–22429	WASHER, PLATE RONDELLE, PLATE	1	1	1			
56	63D–45631–01	CLUTCH, DOG CRABOT	1	1	1			
57	663–45634–00	SLIDE, SHIFT CONTRE-POUSSOIR	1	1	1			
58	90501–16M01	SPRING, COMPRESSION RESSORT, COMPRESSION	1	1	1			
59	63D–45635–00	PLUNGER, SHIFT POUSSOIR D'EMBRAYAGE	1	1	1			

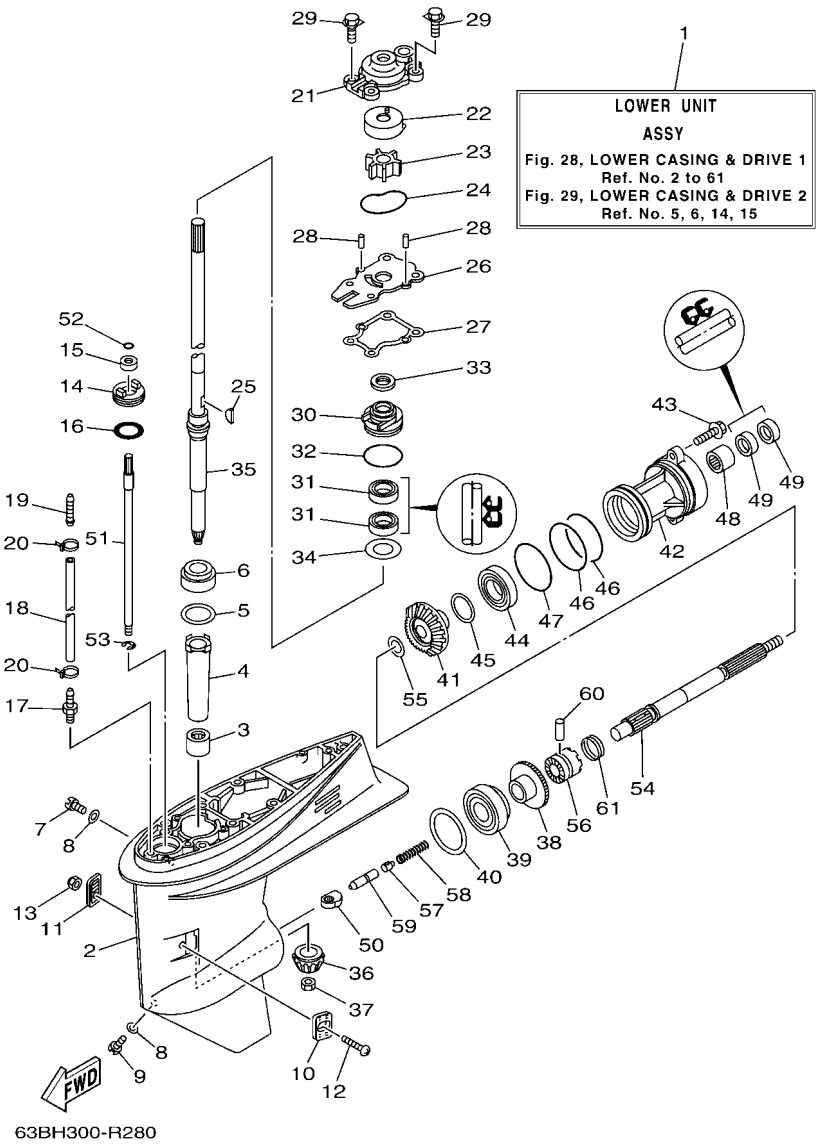

FIG. 28 LOWER CASING & DRIVE 1 — BOITIER D'HELICE TRANSMISSION1

REF. NO.	PART NO. N° PIECES	DESCRIPTION DESCRIPTION	ETO	EO	MHO			REMARKS REMARQUES
60	90250–06023	PIN, STRAIGHT GOUPILLE, DROITE	1	1	1			
61	663–45633–00	RING, CROSS PIN JONC, GOUPILLE CRABOT	1	1	1			

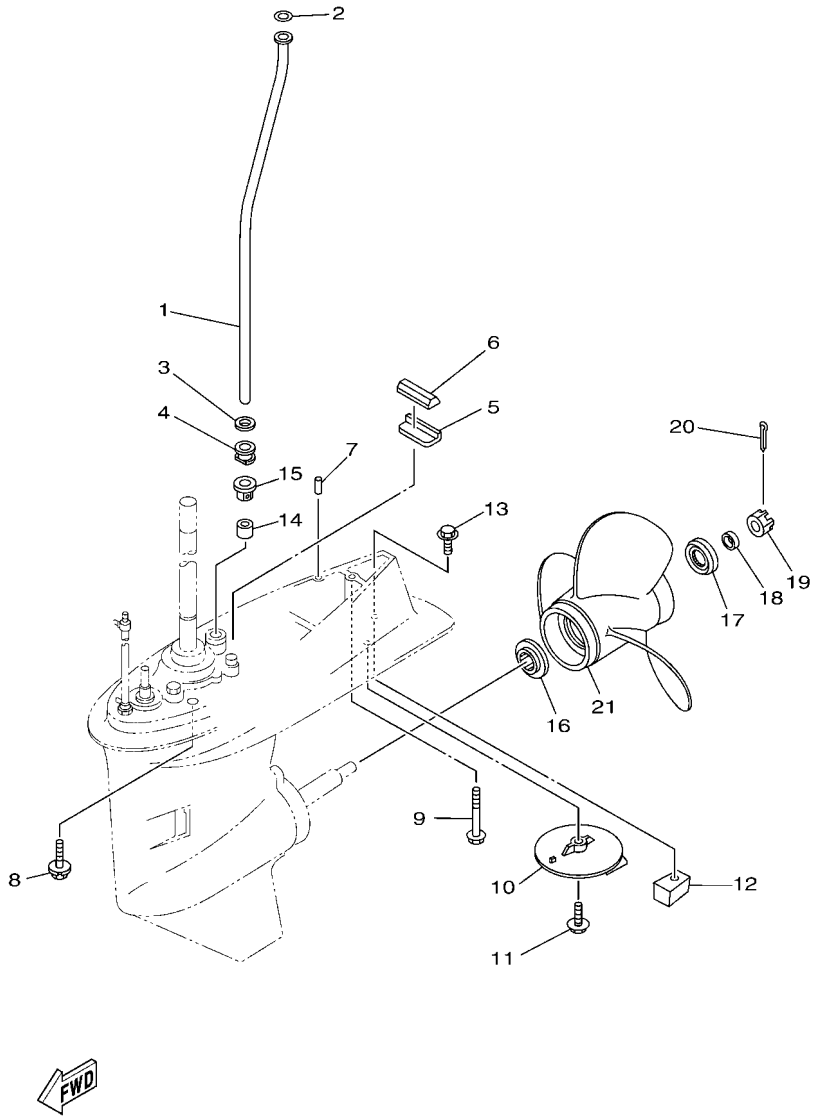

FIG. 29 LOWER CASING & DRIVE 2 — BOITIER D'HELICE TRANSMISSION2

REF. NO.	PART NO. N° PIECES	DESCRIPTION DESCRIPTION	ETO	EO	MHO			REMARKS REMARQUES
1	63D–44361–00	TUBE, WATER 1 TUBE D'EAU 1		1	1			S(16.0") S(16.0")
	63D–44361–10	TUBE, WATER 1 TUBE D'EAU 1	1	1	1			L(21.0") L(21.0")
2	90202–12060	WASHER, PLATE RONDELLE, PLATE	1	1	1			
3	90430–12072	GASKET JOINT	1	1	1			
4	63D–44367–00	DAMPER, WATER SEAL 3 JOINT TUBE D'EAU 3	1	1	1			
5	663–45376–00	GUIDE, SEAL DAMPER BUTEE, JOINT CAOUTCHOUC	1	1	1			
6	63D–45375–00	DAMPER, SEAL BOURRELET, CAOUTCHOUC	1	1	1			
7	93606–12019	PIN, DOWEL GOUPILLE	2	2	2			
8	97E75–10640	BOLT, HEXAGON W/W DEEP RECESS VIS HEXAGONAL AVC RONDELLE	4	4	4			
9	97E75–08560	BOLT, HEXAGON W/W DEEP RECESS VIS HEXAGONAL AVC RONDELLE	1	1	1			
10	664–45371–01	TAB-TRIM ANODE DERIVE	1	1	1			
11	97E95–08525	BOLT, HEXAGON W/W DEEP RECESS VIS HEXAGONAL AVC RONDELLE	1	1	1			
12	67C–45251–00	ANODE ANODE	1	1	1			
13	97E95–08535	BOLT, HEXAGON W/W DEEP RECESS VIS HEXAGONAL AVC RONDELLE	1	1	1			
14	663–44366–00	DAMPER, WATER SEAL 2 JOINT, TUBE D'EAU 2	1	1	1			
15	63D–44312–00	COVER, WATER PUMP HOUSING COUVERCLE	1	1	1			
16	663–45987–02	SPACER 1 ENTRETOISE 1	1	1	1			
17	66T–45997–00	SPACER 2 ENTRETOISE 2	1	1	1			
18	90389–22M01	BUSH DOUILLE	1	1	1			
19	90171–16011	NUT, CASTLE ECROU, CRENELE	1	1	1			
20	91490–30025	PIN. COTTER GOUPILLE	1	1	1			
21	663–45956–01	PROPELLER (3X12-1/4"X9"-G) HELICE (3X12-1/4"X9"-G)	1	1	1			UR UR
	663–45954–01	PROPELLER (3X11-3/4"X10"-G) HELICE (3X11-3/4"X10"-G)	1	1	1			UR UR
	69W–45947–00	PROPELLER (3X11-5/8"X11"-G) HELICE (3X11-5/8"X11"-G)	1	1	1			UR UR
	69W–45952–00	PROPELLER (3X11-3/8"X12"-G) HELICE (3X11-3/8"X12"-G)	1	1	1			UR UR
	663–45952–02	PROPELLER (3X11-3/8"X12"-G) HELICE (3X11-3/8"X12"-G)	1	1	1			UR UR
	69W–45945–00	PROPELLER (3X11-1/8"X13"-G) HELICE (3X11-1/8"X13"-G)	1	1	1			UR UR

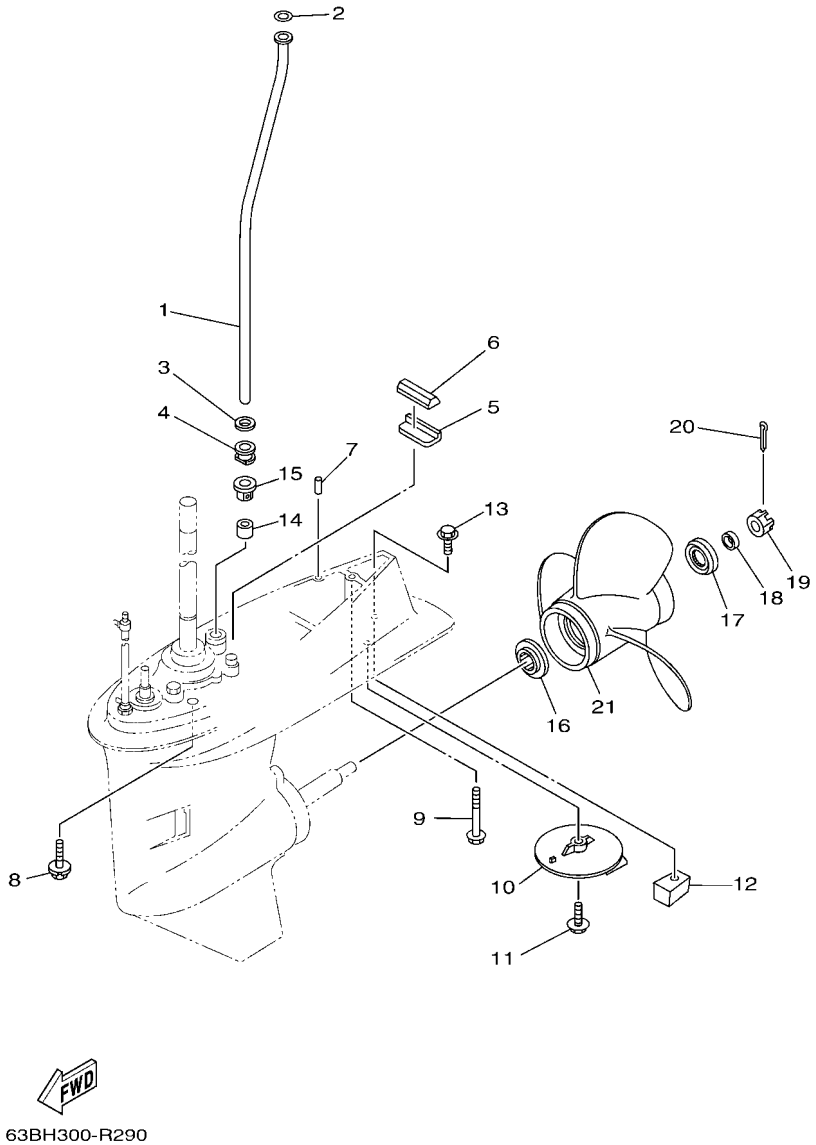

FIG. 29 LOWER CASING & DRIVE 2 — BOITIER D'HELICE TRANSMISSION2

REF. NO.	PART NO. N° PIECES	DESCRIPTION DESCRIPTION	ETO	EO	MHO			REMARKS REMARQUES
21	663–45958–01	PROPELLER (3X11-1/4"X14"-G) HELICE (3X11-1/4"X14"-G)	1	1	1			UR UR
	69W–45958–00	PROPELLER (3X11-1/4"X14"-G) HELICE (3X11-1/4"X14"-G)	1	1	1			UR UR
	69W–45943–00	PROPELLER (3X11"X15"-G) HELICE (3X11"X15"-G)	1	1	1			UR UR
	663–45949–01	PROPELLER (3X10-3/4"X16"-G) HELICE (3X10-3/4"X16"-G)	1	1	1			UR UR
	663–45941–01	PROPELLER (3X10-3/4"X17"-G) HELICE (3X10-3/4"X17"-G)	1	1	1			UR UR
	6H5–45952–00	PROPELLER (3X10-5/8"X12"-G) HELICE (3X10-5/8"X12"-G)	1	1	1			UR WITH LIP CUP UR WITH LIP CUP
	6H5–45945–00	PROPELLER (3X10-3/8"X13"-G) HELICE (3X10-3/8"X13"-G)	1	1	1			UR WITH LIP CUP UR WITH LIP CUP
	6H5–45958–00	PROPELLER (3X10-1/4"X14"-G) HELICE (3X10-1/4"X14"-G)	1	1	1			UR WITH LIP CUP UR WITH LIP CUP
	6H5–45943–00	PROPELLER (3X10"X15"-G) HELICE (3X10"X15"-G)	1	1	1			UR WITH LIP CUP UR WITH LIP CUP
	663–45972–60	PROPELLER (3X12"X11"-G) HELICE (3X12"X11"-G)	1	1	1			UR UR
	663–45970–60	PROPELLER (3X11-3/4"X12"-G) HELICE (3X11-3/4"X12"-G)	1	1	1			UR UR
	663–45974–60	PROPELLER (3X11-1/2"X13"-G) HELICE (3X11-1/2"X13"-G)	1	1	1			UR UR
	663–45974–02	PROPELLER (3X10-5/8"X13"-G) HELICE (3X10-5/8"X13"-G)	1	1	1			UR UR
	663–45930–00	PROPELLER (3X10-1/4"X14"-G) HELICE (3X10-1/4"X14"-G)	1	1	1			UR UR
	697–45970–00	PROPELLER (3X11-1/4"X14"-G) HELICE (3X11-1/4"X14"-G)	1	1	1			UR UR
	663–45976–00	PROPELLER (3X10-1/4"X15"-G) HELICE (3X10-1/4"X15"-G)	1	1	1			UR UR
	663–45978–00	PROPELLER (3X10-1/4"X16"-G) HELICE (3X10-1/4"X16"-G)	1	1	1			UR UR

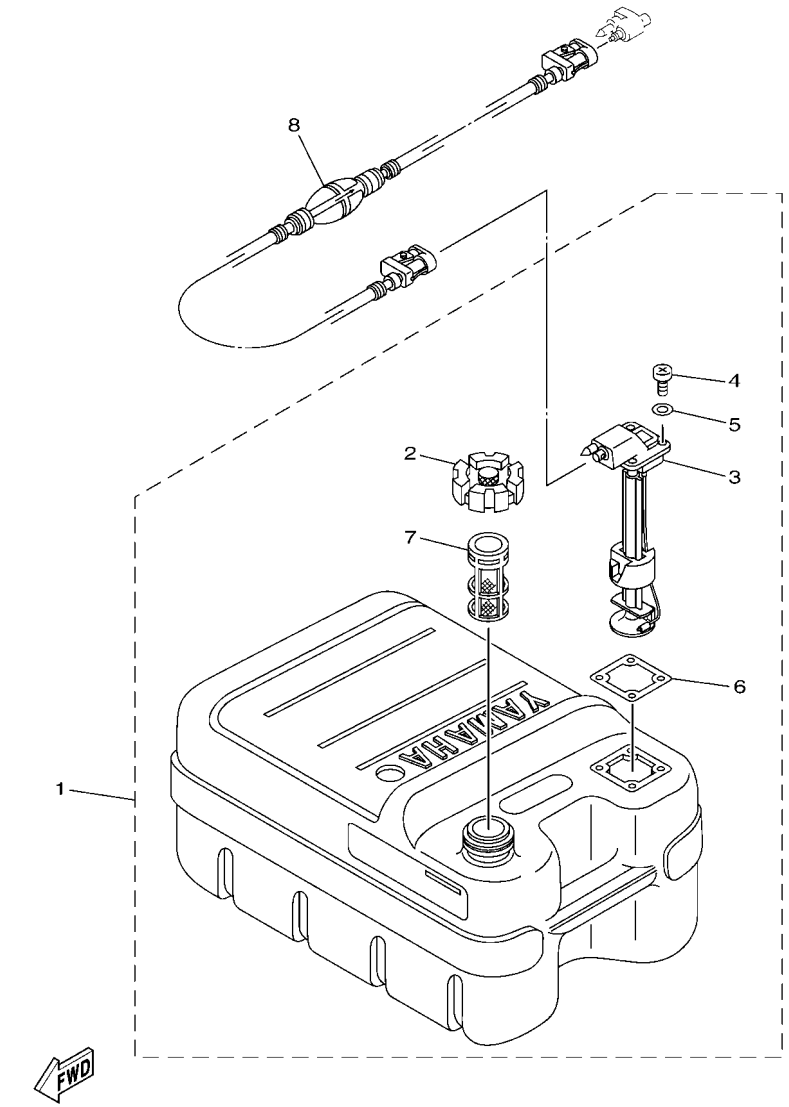

6CAD300-U280

FIG. 30 FUEL TANK 1 — RESERVOIR A CARBURANT 1

REF. NO.	PART NO. N° PIECES	DESCRIPTION DESCRIPTION	ETO	EO	MHO			REMARKS REMARQUES
1	6YJ–24201–30	FUEL TANK ASSY (24L) RESERVOIR A ESSENCE (ENS.):24L		1	1			AP EXCEPT FOR RUS AP EXCEPT FOR RUS
2	6YJ–24610–01	.CAP ASSY .BOUCHON		1	1			
3	6Y1–24260–30	.FUEL METER ASSY .INDICATEUR DE CARBURANT		1	1			WITH INDICATOR WITH INDICATOR
4	90157–05M19	.SCREW, PAN HEAD .VIS, TETE TRONCONIQUE		4	4			
5	6Y1–24329–00	.SEAL .JOINT		4	4			
6	6Y1–24268–00	.GASKET, FUEL METER .JOINT, JAUGE A CARBURANT		1	1			
7	6YJ–24167–00	.STRAINER .FILTRE		1	1			
8	6YL–24306–54	FUEL PIPE COMP. 1 DURITE A ESSENCE 1		1	1			AP EXCEPT FOR RUS AP EXCEPT FOR RUS

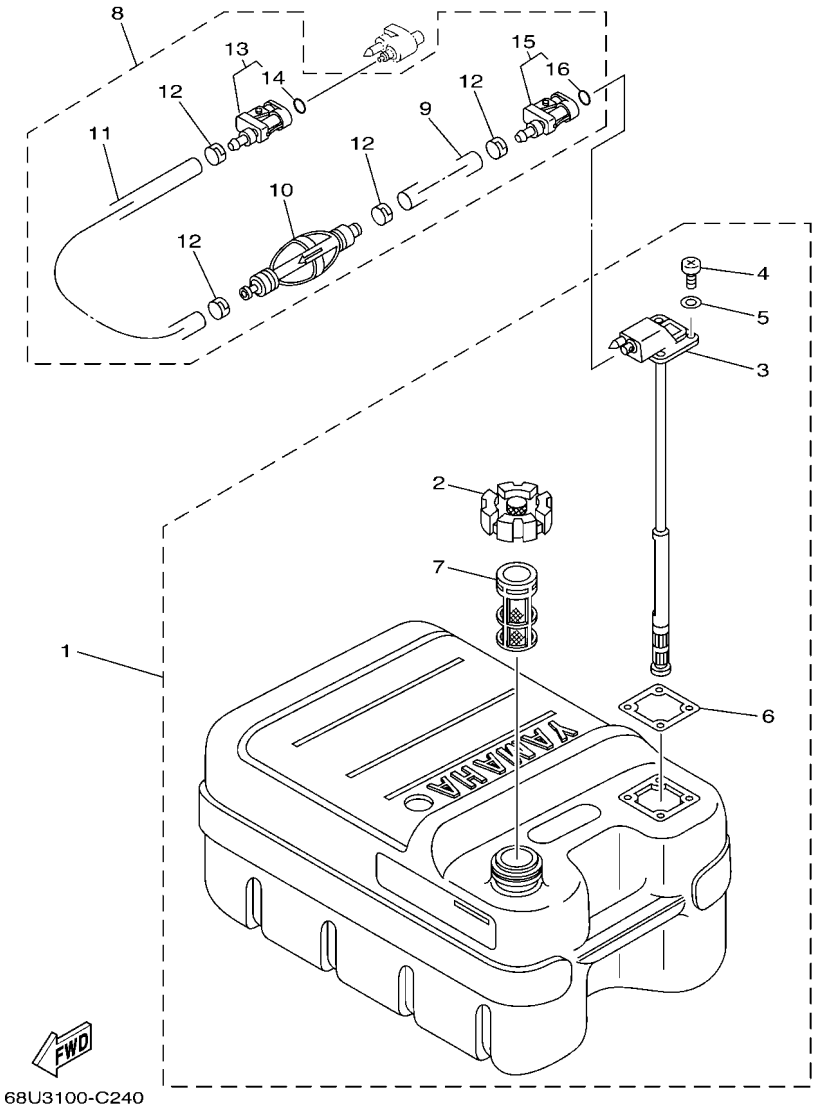

FIG. 31 FUEL TANK 2 — RESERVOIR A CARBURANT 2

REF. NO.	PART NO. N° PIECES	DESCRIPTION DESCRIPTION	ETO	EO	MHO			REMARKS REMARQUES
1	6YJ–24201–20	FUEL TANK ASSY (24L) RESERVOIR A ESSENCE (ENS.):24L	1	1	1			AP FOR RUS AP FOR RUS
2	6YJ–24610–01	.CAP ASSY .BOUCHON	1	1	1			
3	6YJ–24260–10	.FUEL METER ASSY .INDICATEUR DE CARBURANT	1	1	1			
4	90157–05M19	.SCREW, PAN HEAD .VIS, TETE TRONCONIQUE	4	4	4			
5	6Y1–24329–00	.SEAL .JOINT	4	4	4			
6	6Y1–24268–00	.GASKET, FUEL METER .JOINT, JAUGE A CARBURANT	1	1	1			
7	6YJ–24167–00	.STRAINER .FILTRE	1	1	1			
8	61J–24306–04	FUEL PIPE COMP. 1 DURITE A ESSENCE 1	1	1	1			AP FOR RUS AP FOR RUS
9	90445–11M06	.HOSE (L2050) .DURITE (L2050)	1	1	1			
10	61J–24360–00	.PRIMER PUMP ASSY .POMPE D'AMORCAGE	1	1	1			
11	90445–11M05	.HOSE (L850) .DURITE (L850)	1	1	1			
12	650–24351–51	.BAND 1 .COLLIER 1	4	4	4			
13	6G1–24305–05	.FUEL PIPE JOINT COMP. 2 .DURITE RACCORDEMT. A ESSENCE	1	1	1			
14	93210–08287	..O-RING ..JOINT TORIQUE	1	1	1			
15	6Y1–24305–06	.FUEL PIPE JOINT COMP. 2 .DURITE RACCORDEMT. A ESSENCE	1	1	1			
16	93210–08287	..O-RING ..JOINT TORIQUE	1	1	1			

FIG. 32 STEERING GUIDE — FIXATION DE DIRECTION

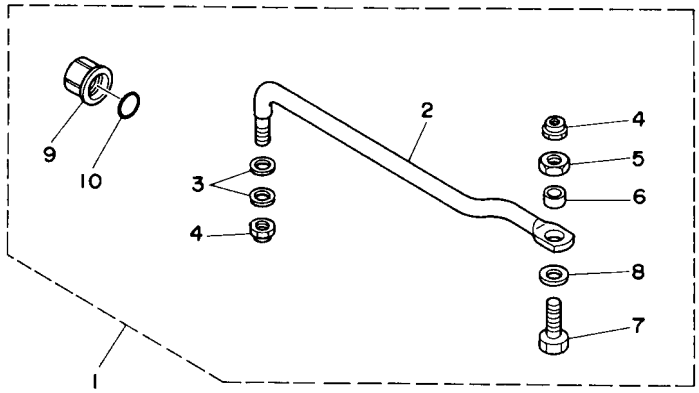

62Y0010-5200

REF. NO.	PART NO. N° PIECES	DESCRIPTION DESCRIPTION	ETO	EO	MHO			REMARKS REMARQUES
1	63D–61350–00	STEERING GUIDE ATTACHMENT KIT FIXATIONS DE DIRECTION	1	1				AP AP
2	63D–61351–00	.ROD, STEERING LINK .RENVOI DE DIRECTION	1	1				
3	90201–10M20	.WASHER, PLATE .RONDELLE, PLATE	2	2				
4	90185–09M01	.NUT, SELF-LOCKING .ECROU,AUTO-BLOQUANT	2	2				
5	90170–09M03	.NUT .ECROU	1	1				
6	90387–10M42	.COLLAR .COLLERETTE	1	1				
7	90101–09M01	.BOLT .BOULON	1	1				
8	90201–10081	.WASHER, PLATE .RONDELLE, PLATE	1	1				
9	6E5–43145–01	.CAP, CLAMP BRACKET .CAPUCHON, PRESSE	1	1				
10	93210–16275	.O-RING .JOINT TORIQUE	1	1				

FIG. 33 REMOTE CONTROL BOX — BOITIER DE COMMANDE A DISTANCE

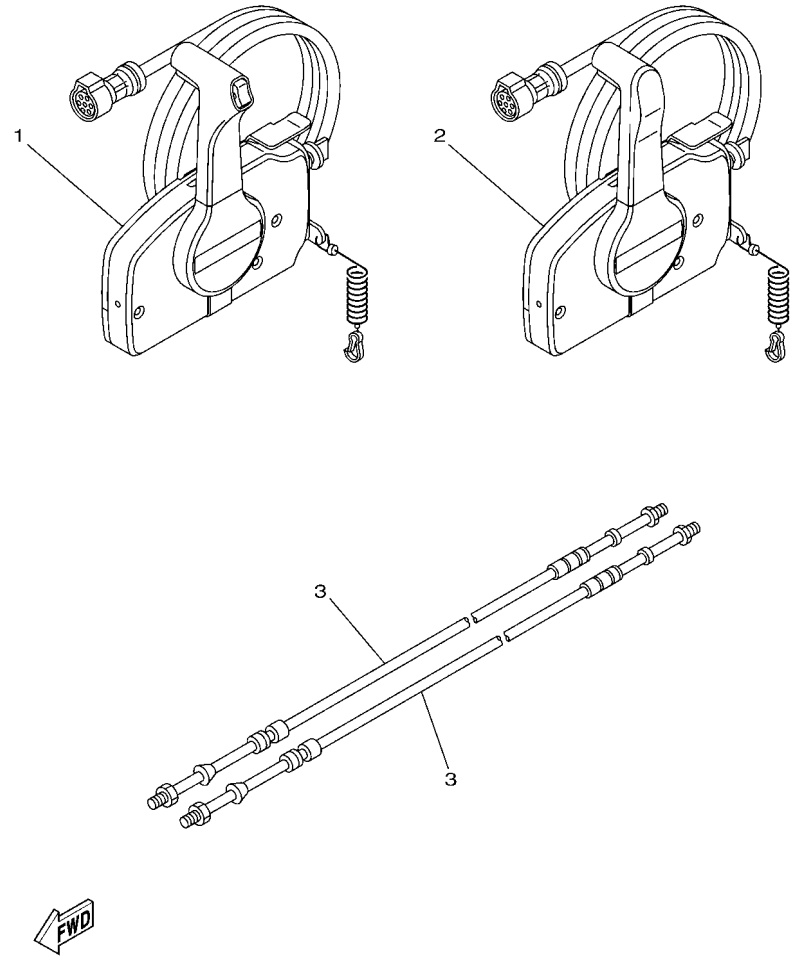

REF. NO.	PART NO. N° PIECES	DESCRIPTION DESCRIPTION	ETO	EO	MHO			REMARKS REMARQUES
1	703–48205–B3	REMOTE CONTROL ASSY (10P, PTT) BOITIER DE COMMANDE A DISTANCE	1					AP WITH PT/T SW. AP WITH PT/T SW.
2	703–48201–B2	REMOTE CONTROL ASSY (10P) BOITIER DE COMMANDE A DISTANCE		1				AP WITHOUT PT/T SW. AP WITHOUT PT/T SW.
3	701–48320–00	CABLE, REMOTE CONTROL L=12F CABLE, COMMANDE A DISTANCE:12F	2	2				UR UR
	701–48320–20	CABLE, REMOTE CONTROL L=13F CABLE, COMMANDE A DISTANCE:13F	2	2				UR UR
	701–48320–30	CABLE, REMOTE CONTROL L=14F CABLE, COMMANDE A DISTANCE:14F	2	2				UR UR
	701–48320–50	CABLE, REMOTE CONTROL L=15F CABLE, COMMANDE A DISTANCE:15F	2	2				UR UR
	701–48320–60	CABLE, REMOTE CONTROL L=16F CABLE, COMMANDE A DISTANCE:16F	2	2				UR UR
	701–48320–80	CABLE, REMOTE CONTROL L=17F CABLE, COMMANDE A DISTANCE:17F	2	2				UR UR

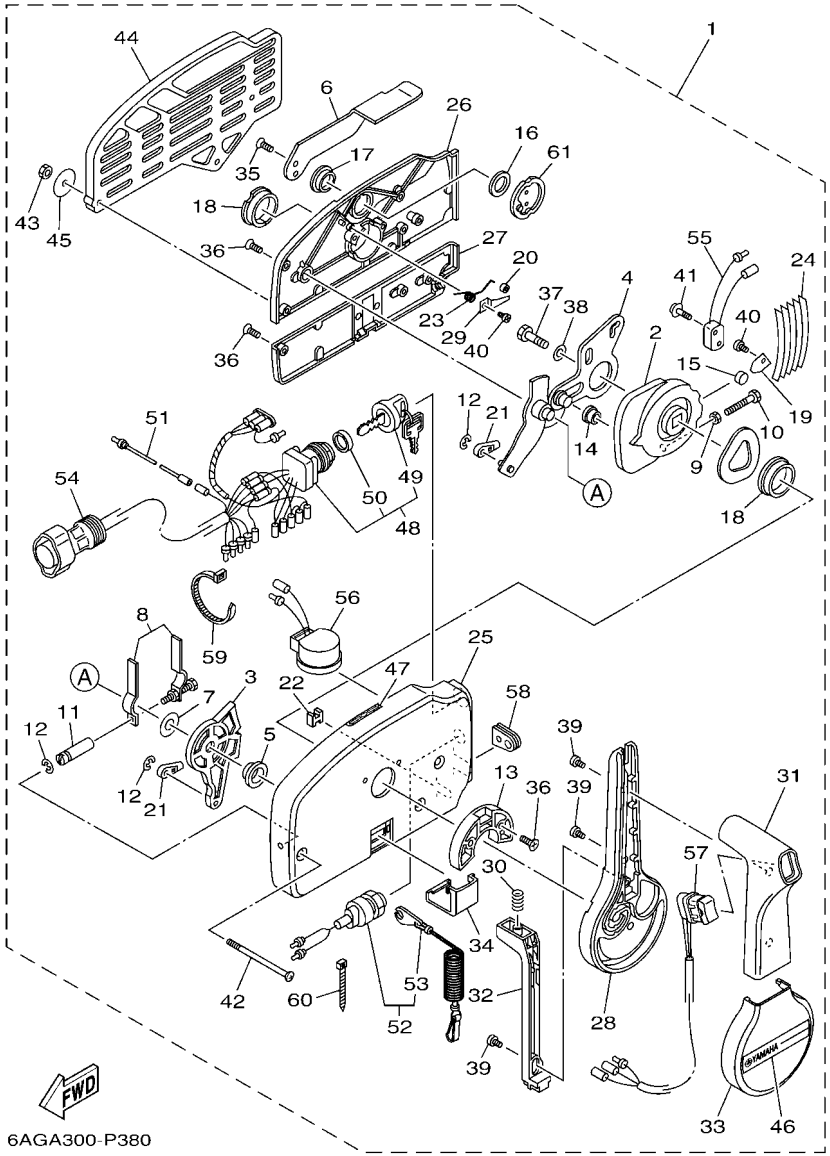

FIG. 34 REMOTE CONTROL ASSY 1 — BOITIER DE COMMANDE A DISTANCE

REF. NO.	PART NO. N° PIECES	DESCRIPTION DESCRIPTION	ETO	EO	MHO			REMARKS REMARQUES
1	703–48205–B3	REMOTE CONTROL ASSY (10P, PTT) BOITIER DE COMMANDE A DISTANCE	1					AP WITH PT/T SW. AP WITH PT/T SW.
2	703–48232–00	.GEAR .PIGNON	1					
3	703–48271–00	.ARM, SHIFT .BRAS	1					
4	703–48261–01	.ARM, THROTTLE .BRAS, ACCELERATION	1					
5	703–48235–00	.BUSHING .COUSSINET	1					
6	703–48152–10	.KNOB, FREE ACCEL. .BOUTON	1					
7	703–48268–00	.SPACER .ENTRETOISE	1					
8	703–48264–00	.FRICTION, THROTTLE .FRICTION, ACCELERATION	1					
9	95380–05600	.NUT .ECROU	1					
10	97380–05025	.BOLT .BOULON, HEXAGONAL	1					
11	703–48265–10	.SHAFT, FRICTION .AXE, COPILOTE	1					
12	93430–06024	.CIRCLIP .CLIPS	3					
13	703–48245–00	.PLATE, LOCK .PLAQUE, VERROU	1					
14	703–48252–00	.ROLLER, CAM .POULIE	1					
15	701–48248–00	.ROLLER, FREE ACCEL. .POULIE	1					
16	703–48198–00	.WASHER, WAVE .RONDELLE, ELASTIQUE ONDULEE	1					
17	703–48243–00	.BUSHING .COUSSINET	1					
18	703–48236–00	.BUSHING 1 .POULIE	2					
19	703–48189–00	.RETAINER .FLASQUE	1					
20	703–48234–00	.ROLLER, DETENT .POULIE	1					
21	703–48345–01	.CABLE END, REMOTE CONTROL 2 .CHAPE CABLE	2					
22	703–48358–01	.ANCHOR, CABLE .COLLIER	1					
23	703–48244–00	.SPRING, FREE ACCEL. .RESSORT	1					
24	703–48238–00	.SPRING, DETENT .RESSORT	5					
25	703–48211–10	.HOUSING,1 .CORPS	1					
26	703–48212–10	.BACK PLATE 1 .PLAQUETTE 1	1					
27	703–48213–10	.BACK PLATE 2 .PLAQUETTE 2	1					

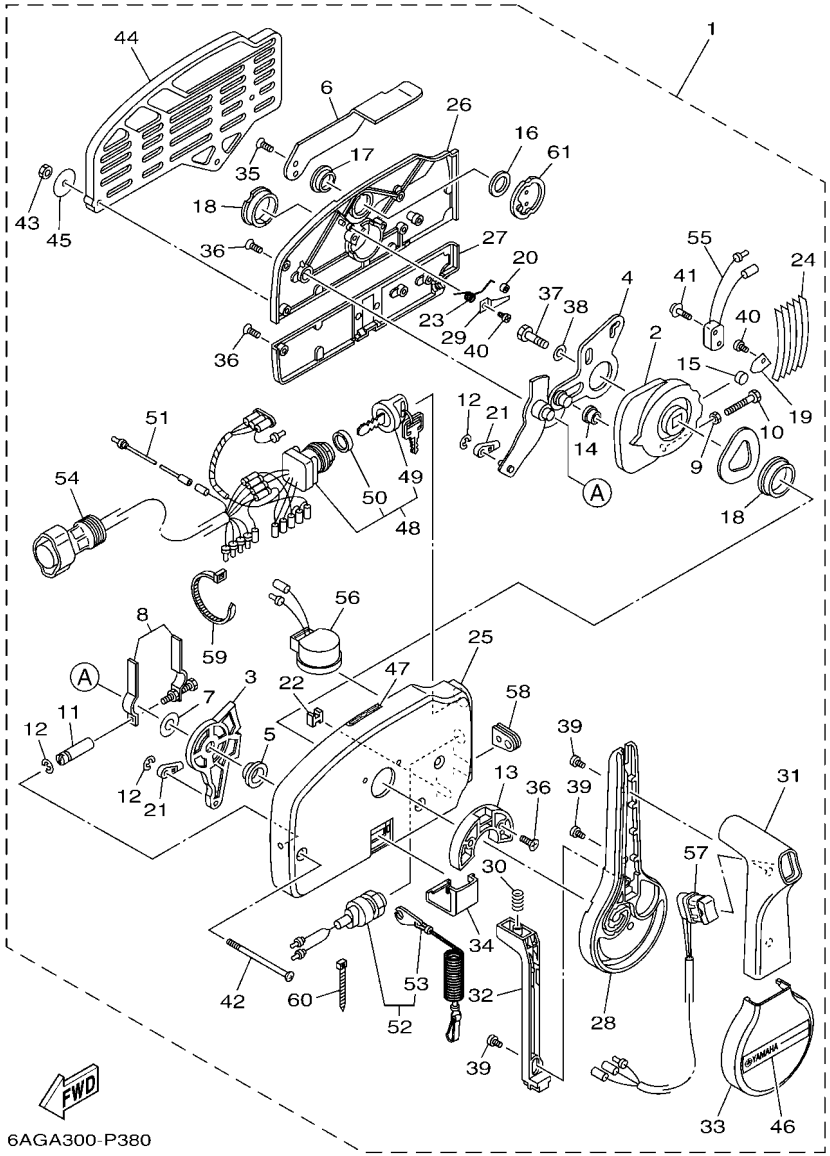

FIG. 34 REMOTE CONTROL ASSY 1 — BOITIER DE COMMANDE A DISTANCE

REF. NO.	PART NO. N° PIECES	DESCRIPTION DESCRIPTION	ETO	EO	MHO			REMARKS REMARQUES
28	703–48221–10	.LEVER, CONTROL .LEVIER, COMMANDE	1					
29	703–48246–00	.SPACER .ENTRETOISE	1					
30	703–48227–00	.SPRING, NEUTRAL LOCK .RESSORT	1					
31	703–48222–20	.GRIP, CONTROL LEVER .POIGNEE, COMMANDE LEVIER	1					SINGLE SINGLE
32	703–48223–10	.LOCK, NEUTRAL .VERROU, NEUTRAL	1					
33	703–48225–10	.COVER .COUVERCLE	1					
34	703–48219–10	.COVER, LEAD .COUVERCLE	1					
35	703–48281–00	.SCREW .VIS	2					
36	703–44189–20	.SCREW .VIS	7					
37	97380–08030	.BOLT .BOULON, HEXAGONAL	1					
38	92990–08600	.WASHER, PLATE .RONDELLE, PLATE	1					
39	703–48128–10	.SCREW 2 .VIS 2	3					
40	98580–04006	.SCREW, PAN HEAD .VIS	2					
41	703–48129–00	.SCREW 3 .VIS 3	2					
42	703–44189–30	.SCREW .VIS	3					
43	95380–06600	.NUT, HEXAGON .ECROU	3					
44	703–48293–10	.SPACER, REMOTE CONTROL .ENTRETOISE	1					SINGLE SINGLE
45	701–48287–00	.WASHER .RONDELLE	3					
46	703–48215–11	.GRAPHIC .ADHESIF	1					
47	6X3–44191–00	.INDICATOR, SHIFT .ETIQUETTE, EMBRAYAGE	1					
48	703–82510–13	.MAIN SWITCH ASSY .CONTACTEUR A CLEF COMPLET	1					PRIME START PRIME START
49	676–82577–01	..CAP, KEY ..CABOCHON	1					
50	703–82532–00	..CAP ..COUVERCLE	1					
51	703–82531–00	.WIRE, LEAD (L70) .FIL (L70)	1					
52	688–82575–02	.ENGINE STOP SWITCH ASSY .COUPE CIRCUIT CPLT	1					
53	682–82556–00	..LANYARD, STOP SWITCH ..CORDON DU COUPE CIRCUIT	1					
54	688–8258A–20	.EXTENSION, WIRE HARNESS (4.9M) .EXTENSION, FAISCEAU DE FILS (4	1					(10P) (10P)

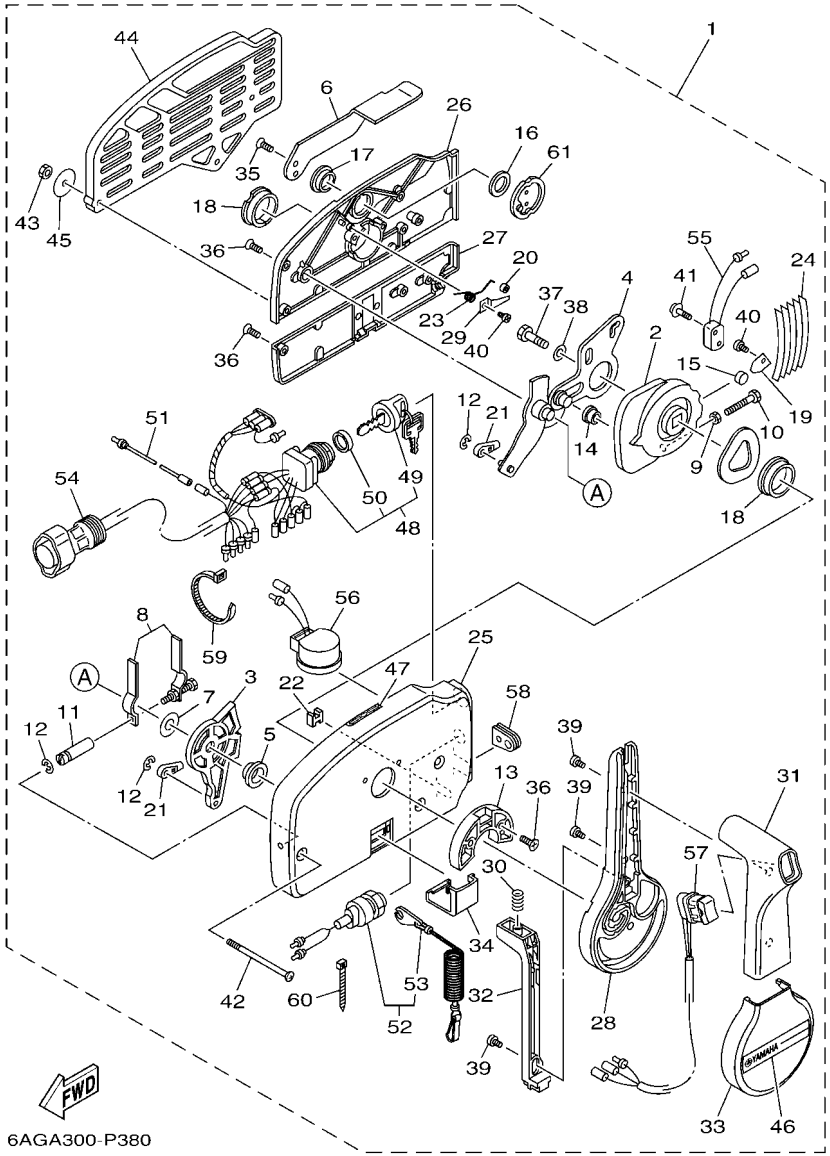

FIG. 34 REMOTE CONTROL ASSY 1 — BOITIER DE COMMANDE A DISTANCE

REF. NO.	PART NO. N° PIECES	DESCRIPTION DESCRIPTION	ETO	EO	MHO			REMARKS REMARQUES
55	703–82540–00	.NEUTRAL SWITCH ASSY .CONTACTEUR DE POINT-MORT	1					
56	703–83383–11	.BUZZER .RONFLEUR	1					
57	703–82563–31	.TRIM & TILT SWITCH ASSY .INCLINER ET PARER COMMUTATEUR	1					
58	703–48284–00	.GROMMET .PASSE-FIL	1					
59	703–82591–00	.BAND .COLLIER	1					
60	703–82592–00	.BAND .COLLIER	1					
61	703–48153–00	.SHAFT, FREE ACCEL. .AXE	1					

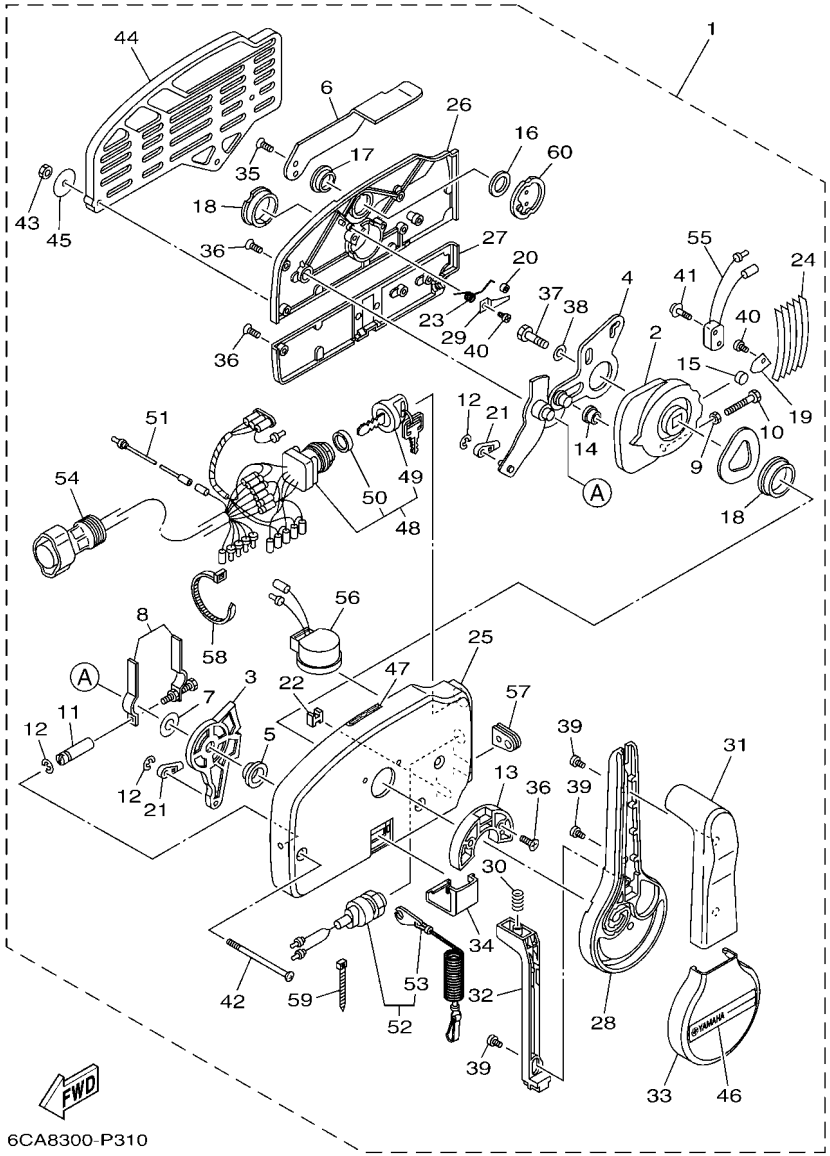

FIG. 35 REMOTE CONTROL ASSY 2 — BOITIER DE COMMANDE A DISTANCE

REF. NO.	PART NO. N° PIECES	DESCRIPTION DESCRIPTION	ETO	EO	MHO			REMARKS REMARQUES
1	703–48201–B2	REMOTE CONTROL ASSY (10P) BOITIER DE COMMANDE A DISTANCE		1				AP WITHOUT PT/T SW. AP WITHOUT PT/T SW.
2	703–48232–00	.GEAR .PIGNON		1				
3	703–48271–00	.ARM, SHIFT .BRAS		1				
4	703–48261–01	.ARM, THROTTLE .BRAS, ACCELERATION		1				
5	703–48235–00	.BUSHING .COUSSINET		1				
6	703–48152–10	.KNOB, FREE ACCEL. .BOUTON		1				
7	703–48268–00	.SPACER .ENTRETOISE		1				
8	703–48264–00	.FRICTION, THROTTLE .FRICTION, ACCELERATION		1				
9	95380–05600	.NUT .ECROU		1				
10	97380–05025	.BOLT .BOULON, HEXAGONAL		1				
11	703–48265–10	.SHAFT, FRICTION .AXE, COPILOTE		1				
12	93430–06024	.CIRCLIP .CLIPS		3				
13	703–48245–00	.PLATE, LOCK .PLAQUE, VERROU		1				
14	703–48252–00	.ROLLER, CAM .POULIE		1				
15	701–48248–00	.ROLLER, FREE ACCEL. .POULIE		1				
16	703–48198–00	.WASHER, WAVE .RONDELLE, ELASTIQUE ONDULEE		1				
17	703–48243–00	.BUSHING .COUSSINET		1				
18	703–48236–00	.BUSHING 1 .POULIE		2				
19	703–48189–00	.RETAINER .FLASQUE		1				
20	703–48234–00	.ROLLER, DETENT .POULIE		1				
21	703–48345–01	.CABLE END, REMOTE CONTROL 2 .CHAPE CABLE		2				
22	703–48358–01	.ANCHOR, CABLE .COLLIER		1				
23	703–48244–00	.SPRING, FREE ACCEL. .RESSORT		1				
24	703–48238–00	.SPRING, DETENT .RESSORT		5				
25	703–48211–10	.HOUSING,1 .CORPS		1				
26	703–48212–10	.BACK PLATE 1 .PLAQUETTE 1		1				
27	703–48213–10	.BACK PLATE 2 .PLAQUETTE 2		1				

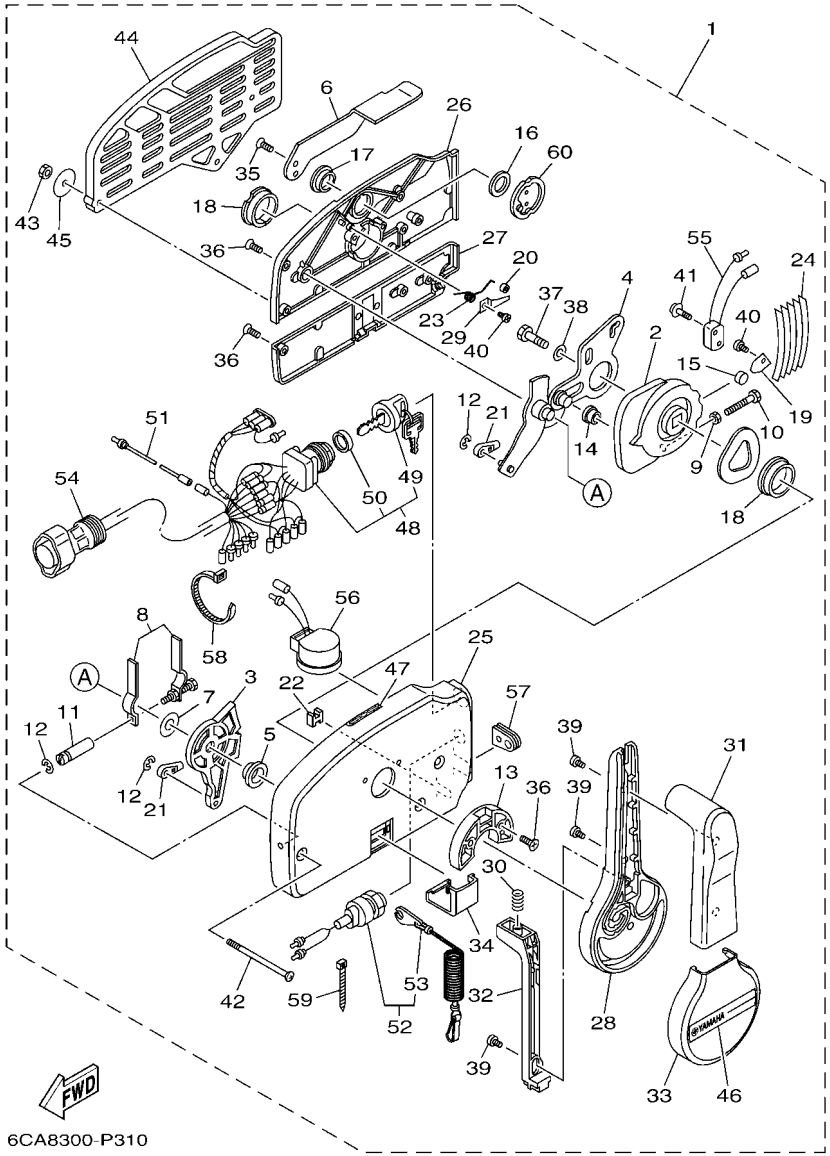

FIG. 35 REMOTE CONTROL ASSY 2 — BOITIER DE COMMANDE A DISTANCE

REF. NO.	PART NO. N° PIECES	DESCRIPTION DESCRIPTION	ETO	EO	MHO			REMARKS REMARQUES
28	703–48221–10	.LEVER, CONTROL .LEVIER, COMMANDE		1				
29	703–48246–00	.SPACER .ENTRETOISE		1				
30	703–48227–00	.SPRING, NEUTRAL LOCK .RESSORT		1				
31	703–48222–30	.GRIP, CONTROL LEVER .POIGNEE, COMMANDE LEVIER		1				SINGLE SINGLE
32	703–48223–10	.LOCK, NEUTRAL .VERROU, NEUTRAL		1				
33	703–48225–10	.COVER .COUVERCLE		1				
34	703–48219–10	.COVER, LEAD .COUVERCLE		1				
35	703–48281–00	.SCREW .VIS		2				
36	703–44189–20	.SCREW .VIS		7				
37	97380–08030	.BOLT .BOULON, HEXAGONAL		1				
38	92990–08600	.WASHER, PLATE .RONDELLE, PLATE		1				
39	703–48128–10	.SCREW 2 .VIS 2		3				
40	98580–04006	.SCREW, PAN HEAD .VIS		2				
41	703–48129–00	.SCREW 3 .VIS 3		2				
42	703–44189–30	.SCREW .VIS		3				
43	95380–06600	.NUT, HEXAGON .ECROU		3				
44	703–48293–10	.SPACER, REMOTE CONTROL .ENTRETOISE		1				SINGLE SINGLE
45	701–48287–00	.WASHER .RONDELLE		3				
46	703–48215–11	.GRAPHIC .ADHESIF		1				
47	6X3–44191–00	.INDICATOR, SHIFT .ETIQUETTE, EMBRAYAGE		1				
48	703–82510–13	.MAIN SWITCH ASSY .CONTACTEUR A CLEF COMPLET		1				PRIME START PRIME START
49	676–82577–01	..CAP, KEY ..CABOCHON		1				
50	703–82532–00	..CAP ..COUVERCLE		1				
51	703–82531–00	.WIRE, LEAD (L70) .FIL (L70)		1				
52	688–82575–02	.ENGINE STOP SWITCH ASSY .COUPE CIRCUIT CPLT		1				
53	682–82556–00	..LANYARD, STOP SWITCH ..CORDON DU COUPE CIRCUIT		1				
54	688–8258A–20	.EXTENSION, WIRE HARNESS (4.9M) .EXTENSION, FAISCEAU DE FILS (4		1				(10P) (10P)

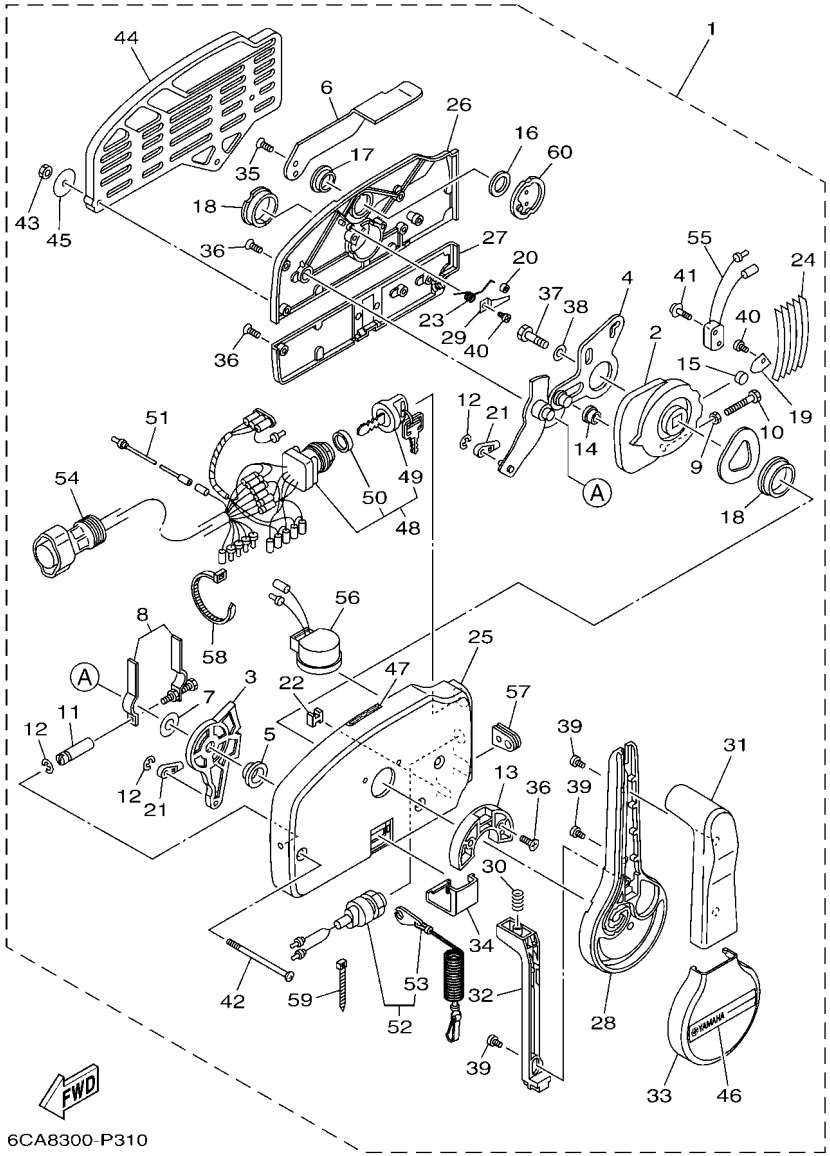

FIG. 35 REMOTE CONTROL ASSY 2 — BOITIER DE COMMANDE A DISTANCE

REF. NO.	PART NO. N° PIECES	DESCRIPTION DESCRIPTION	ETO	EO	MHO			REMARKS REMARQUES
55	703–82540–00	.NEUTRAL SWITCH ASSY .CONTACTEUR DE POINT-MORT		1				
56	703–83383–11	.BUZZER .RONFLEUR		1				
57	703–48284–00	.GROMMET .PASSE-FIL		1				
58	703–82591–00	.BAND .COLLIER		1				
59	703–82592–00	.BAND .COLLIER		1				
60	703–48153–00	.SHAFT, FREE ACCEL. .AXE		1				

FIG. 36 METER COMPTEUR

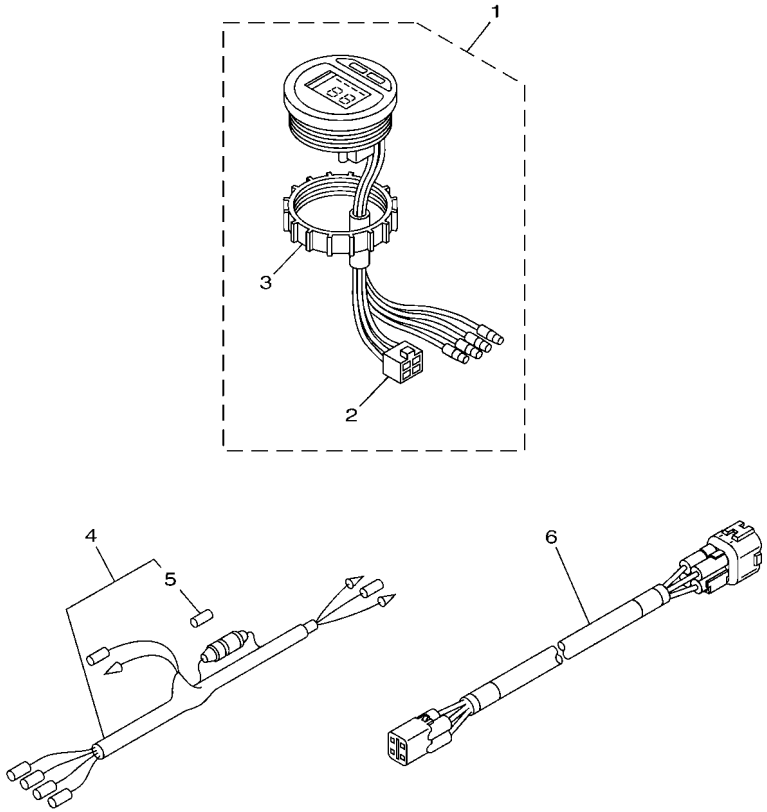

6DA5200-R460

REF. NO.	PART NO. N° PIECES	DESCRIPTION DESCRIPTION	ETO	EO	MHO			REMARKS REMARQUES
1	6Y5–8350T–E0	TACHOMETER ASSY COMPTE-TOURS CPLT	1					AP FOR RUS AP FOR RUS
2	9E450–04533	.CONNECTOR .CONNECTEUR	1					F-4-W F-4-W
3	6Y8–84383–00	.NUT, RING .ECROU ANNULAIRE	1					
4	6Y5–83553–01	WIRE, LEAD (L=2.5M) FIL (L=2.5M)	1					AP FOR RUS AP FOR RUS
5	6G1–82151–01	.FUSE (10A) .FUSIBLE (10A)	1					
6	6Y5–83653–20	WIRE, LEAD (L=7.0M) FIL (L=7.0M)	1					AP FOR RUS 4P,7M AP FOR RUS 4P,7M

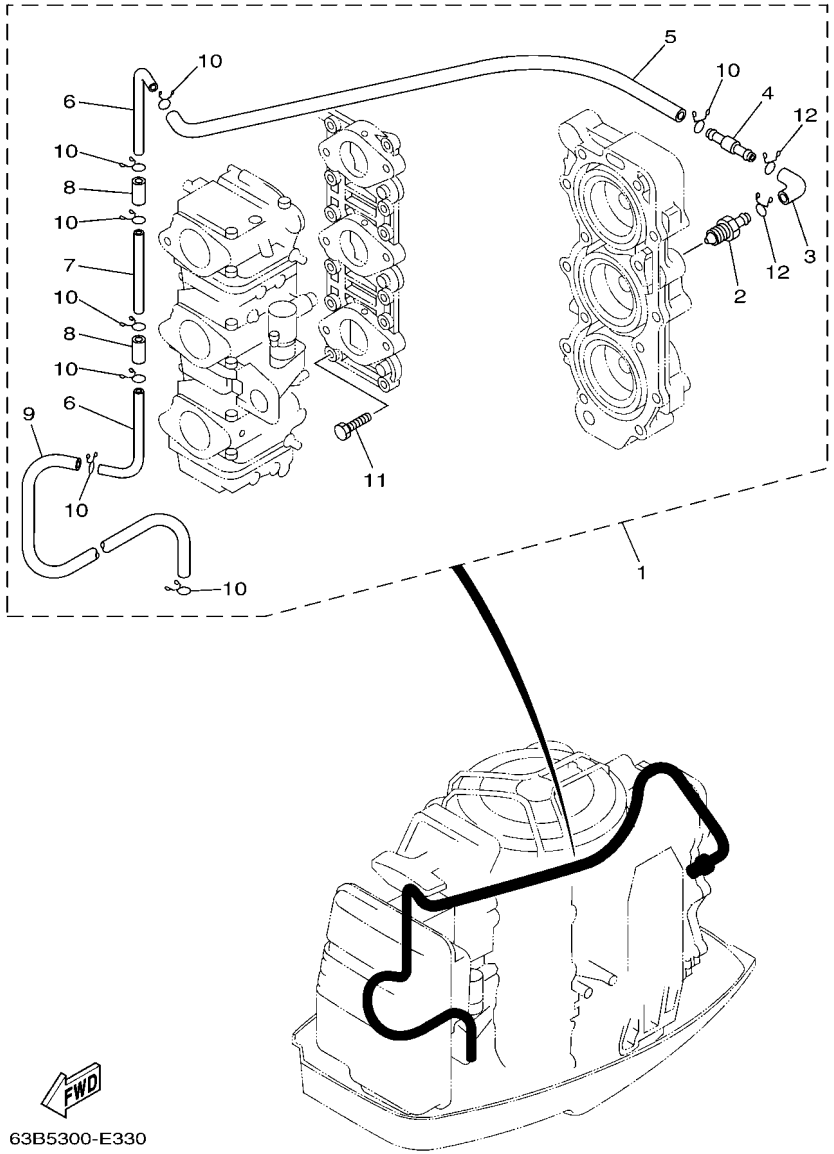

FIG. 37 OPTIONAL PARTS — PIECES OPTIONNELLES

REF. NO.	PART NO. N° PIECES	DESCRIPTION DESCRIPTION	ETO	EO	MHO			REMARKS REMARQUES
1	63D–12440–51	HEAT EXCHANGER ASSY ECHANGEUR DE CHALEUR	1	1				
2	6H4–12469–01	.JOINT 1 .RACCORD 1	1	1				
3	6E5–24315–00	.PIPE 5 .DURITE 5	1	1				
4	63D–12469–00	.JOINT 1 .RACCORD 1	1	1				
5	6E5–12481–00	.PIPE 1 .DURITE 1	1	1				
6	6H4–12466–A0	.EXCHANGER, HEAT .ECHANGEUR DE CHALEUR	2	2				
7	6H4–12466–B0	.EXCHANGER, HEAT .ECHANGEUR DE CHALEUR	1	1				
8	90445–11M30	.HOSE (L20) .DURITE (L20)	2	2				
9	90445–11M66	.HOSE (L410) .DURITE (L410)	1	1				
10	90467–10M04	.CLIP .JONC	8	8				
11	90101–06128	.BOLT .BOULON	1	1				
12	90467–11M08	.CLIP .JONC	2	2				

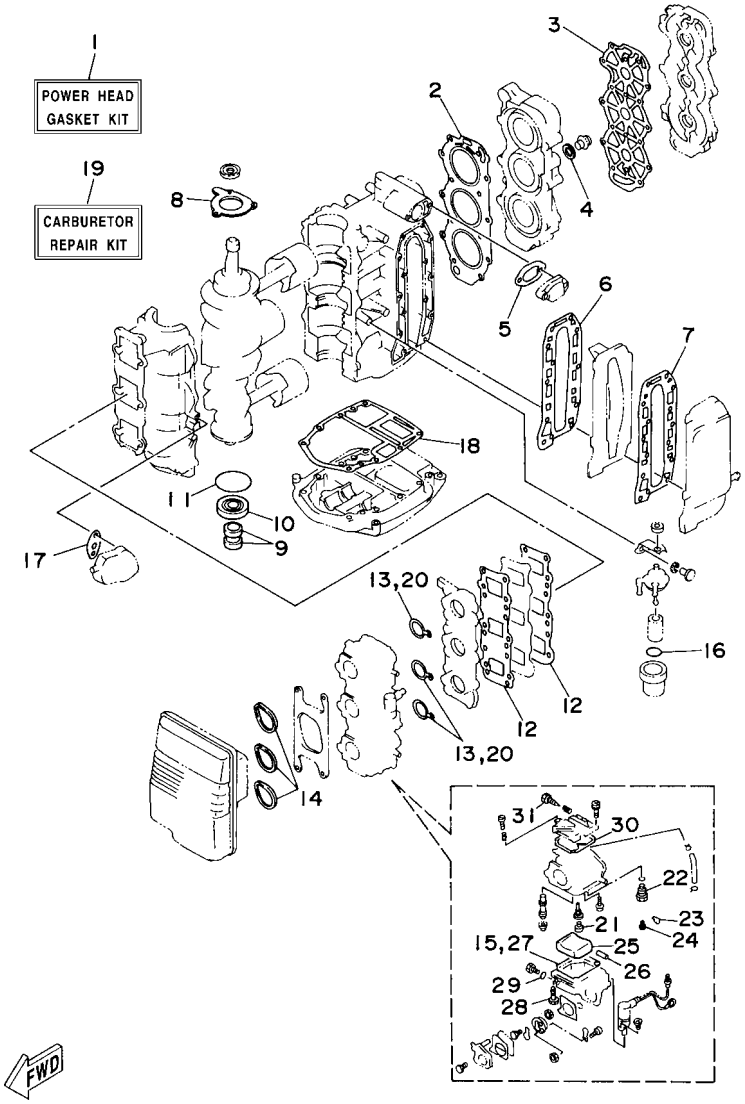

FIG. 38 REPAIR KIT 1 — KITS DE REPARATION 1

REF. NO.	PART NO. N° PIECES	DESCRIPTION DESCRIPTION	ETO	EO	MHO			REMARKS REMARQUES
1	63D–W0001–01	POWER HEAD GASKET KIT POCHETTE DE JINTS TETE MOTRICE	1	1	1			
2	63D–11181–A2	.GASKET, CYLINDER HEAD 1 .JOINT, DE CULASSE 1	1	1	1			
3	63D–11193–A0	.GASKET, HEAD COVER 1 .JOINT, COUVERCLE DE CULASSE 1	1	1	1			
4	90430–14115	.GASKET .JOINT	1	1	1			
5	6J8–12414–A0	.GASKET, COVER .JOINT, COUVERCLE	1	1	1			
6	6H4–41112–A0	.GASKET, EXHAUST INNER COVER .JOINT, PLAQUE D'ECHAPPEMENT	1	1	1			
7	6H4–41114–A0	.GASKET, EXHAUST OUTER COVER .JOINT, COUVERCLE D'ECHAPPEMENT	1	1	1			
8	6H4–15369–A1	.GASKET, OIL SEAL HOUSING .JOINT SPY DE LOGEMENT	1	1	1			
9	93104–16M01	.OIL SEAL .JOINT SPY	2	2	2			
10	93102–25M28	.OIL SEAL .JOINT SPY	1	1	1			
11	93210–56001	.O-RING .JOINT TORIQUE	1	1	1			
12	6H4–13621–A1	.GASKET, VALVE SEAT .JOINT, SIEGE DE CLAPET	2	2	2			
13	6H4–14198–01	.GASKET .JOINT	3	3	3			
14	6H3–14457–01	.SEAL .JOINT	3	3	3			
15	6H4–14984–00	.GASKET, FLOAT CHAMBER .JOINT, CUVE DE FLOTTEUR	3	3	3			
16	93210–32738	.O-RING .JOINT TORIQUE	1	1	1			
17	650–24431–A0	.GASKET, FUEL PUMP 1 .JOINT 1 DE POMPE A ESSENCE	1	1	1			
18	6H4–45113–A0	.GASKET, UPPER CASING .JOINT, TUBE D'ARBRE	1	1	1			
19	6H4–W0093–03	CARBURETOR REPAIR KIT KIT DE REPARATION CARBURATEUR	1	1	1			
20	6H4–14198–01	.GASKET .JOINT	3	3	3			
21	676–14966–00	.CAP .CAPUCHON	3	3	3			
22	6H4–14590–01	.NEEDLE VALVE ASSY .POINTEAU	3	3	3			
23	663–14159–00	.CLIP .JONC	3	3	3			
24	676–14186–00	.PIN, FLOAT .AXE, FLOTTEUR	3	3	3			
25	6H4–14985–01	.FLOAT .FLOTTEUR	3	3	3			
26	6H4–14548–00	.PIN, FLOAT ARM .AXE, BRAS DE FLOTTEUR	3	3	3			
27	6H4–14984–00	.GASKET, FLOAT CHAMBER .JOINT, CUVE DE FLOTTEUR	3	3	3			

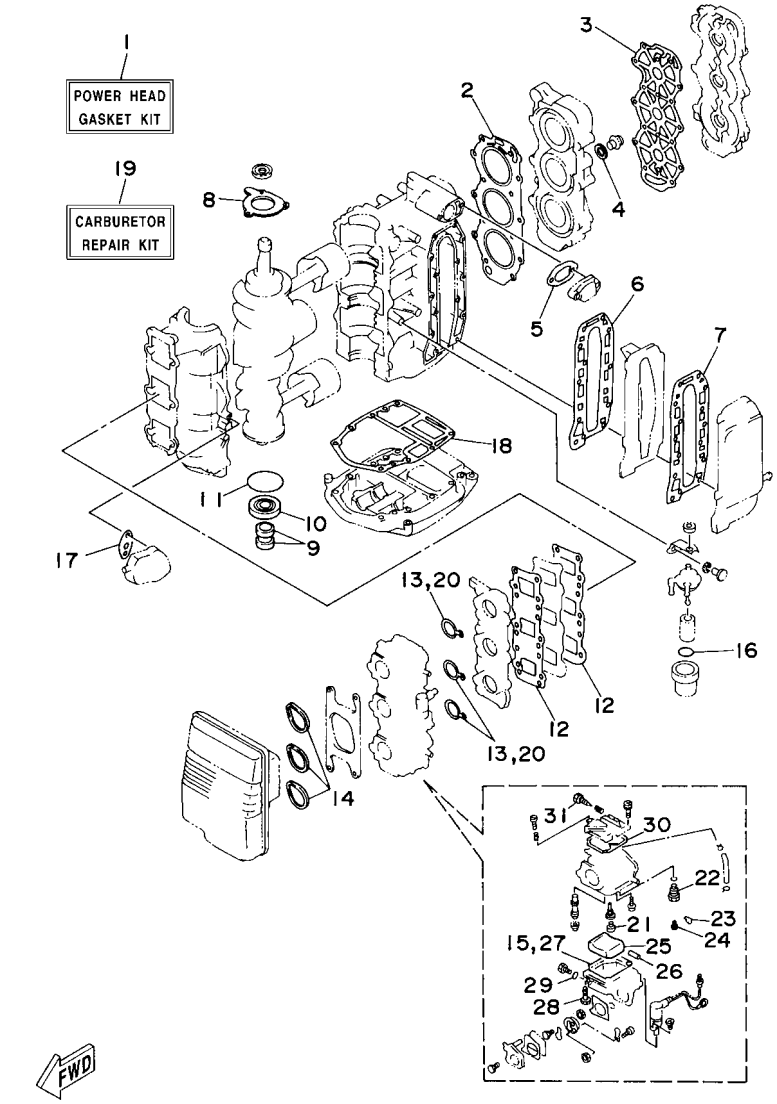

FIG. 38 REPAIR KIT 1 — KITS DE REPARATION 1

REF. NO.	PART NO. N° PIECES	DESCRIPTION DESCRIPTION	ETO	EO	MHO			REMARKS REMARQUES
28	97980–04114	.SCREW, WITH WASHER .VIS, AVEC RONDELLE	3	3	3			
29	93210–04230	.O-RING .JOINT TORIQUE	3	3	3			
30	6H4–14147–00	.O-RING .JOINT TORIQUE	3	3	3			
31	692–14923–00	.SCREW, PILOT .VIS, RALENTI	3	3	3			

FIG. 39 REPAIR KIT 2 — KITS DE REPARATION 2

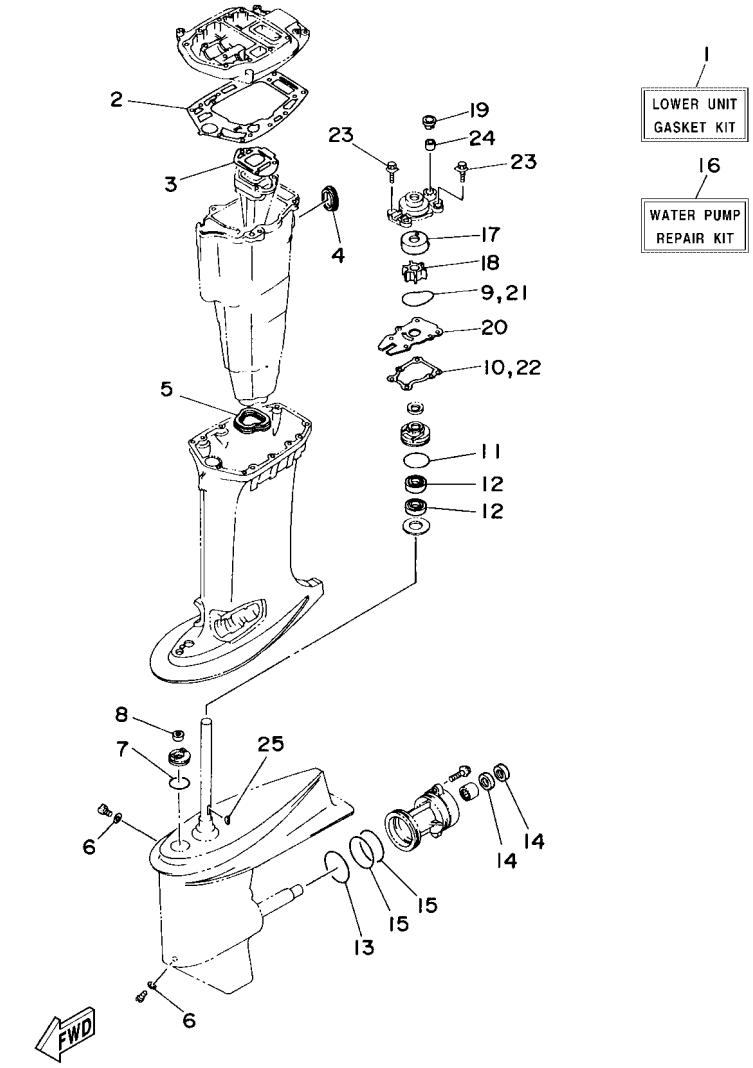

REF. NO.	PART NO. N° PIECES	DESCRIPTION DESCRIPTION	ETO	EO	MHO			REMARKS REMARQUES
1	63D–W0001–21	LOWER UNIT GASKET KIT POCHETTE DE JOINTS EMBASE	1	1	1			
2	63D–45114–A0	.GASKET, UPPER CASING .JOINT, TUBE D'ARBRE	1	1	1			
3	6H4–41134–A0	.GASKET, EXHAUST MANIFOLD .JOINT, PIPE D'ECHAPPEMENT	1	1	1			
4	6H3–45127–00	.SEAL .JOINT	1	1	1			
5	63D–45123–00	.GASKET, MUFFLER .JOINT, POT DE DETENTE	1	1	1			
6	90430–08003	.GASKET .JOINT	2	2	2			
7	93210–33MG4	.O-RING .JOINT TORIQUE	1	1	1			
8	93106–09014	.OIL SEAL .JOINT SPY	1	1	1			
9	93210–59MG7	.O-RING .JOINT TORIQUE	1	1	1			
10	63D–44316–00	.GASKET, WATER PUMP .JOINT, POMPE A EAU	1	1	1			
11	93210–48001	.O-RING .JOINT TORIQUE	1	1	1			
12	93101–25M57	.OIL SEAL .JOINT SPY	2	2	2			
13	93210–69MG6	.O-RING .JOINT TORIQUE	1	1	1			
14	93101–22M00	.OIL SEAL .JOINT SPY	2	2	2			
15	93210–74MG5	.O-RING .JOINT TORIQUE	2	2	2			
16	63D–W0078–02	WATER PUMP REPAIR KIT KIT DE REPARATION DE LA POMPE	1	1	1			
17	63D–44322–00	.INSERT, CARTRIDGE .CUVETTE	1	1	1			
18	6H3–44352–00	.IMPELLER .TURBINE	1	1	1			
19	63D–44312–00	.COVER, WATER PUMP HOUSING .COUVERCLE	1	1	1			
20	63D–44323–00	.OUTER PLATE, CARTRIDGE .PLAQUE EXTERIEURE	1	1	1			
21	93210–59MG7	.O-RING .JOINT TORIQUE	1	1	1			
22	63D–44316–00	.GASKET, WATER PUMP .JOINT, POMPE A EAU	1	1	1			
23	90119–08185	.BOLT, WITH WASHER .BOULON, AVEC RONDELLE	4	4	4			
24	663–44366–00	.DAMPER, WATER SEAL 2 .JOINT, TUBE D'EAU 2	1	1	1			
25	90280–03024	.KEY, WOODRUFF .CLAVETTE, DEMI-LUNE	1	1	1			

NUMERICAL INDEX
INDEX NUMERIQUE

PART NO. N° PIECES	REF. NO.
63D–11111–00–1S	3 – 22
6H4–11119–01	3 – 18
63D–11181–A2	3 – 23
	38 – 2
63D–11191–00–1S	3 – 26
63D–11193–A0	3 – 27
	38 – 3
688–11325–00	1 – 1
	3 – 20
650–11370–01	3 – 3
688–11370–01	3 – 7
6H4–11372–01	3 – 5
6H4–11400–14	4 – 7
6H4–11536–00	4 – 8
6H4–11537–01	7 – 4
	8 – 4
6H4–11545–00	11 – 14
63D–11603–00	4 – 13
63D–11604–00	4 – 13
63D–11605–00	4 – 13
6H4–11631–01–95	4 – 12
648–11633–00	4 – 14
6H4–11634–01	4 – 17
6H4–11635–01	4 – 12
6H4–11636–01	4 – 12
6H4–11641–00	4 – 16
6E5–12411–30	1 – 2
	3 – 30
688–12412–00	3 – 31
6H4–12413–00–1S	3 – 32
6J8–12414–A0	1 – 3
	3 – 33
	38 – 5
63D–12440–51	37 – 1
6H4–12466–A0	37 – 6
6H4–12466–B0	37 – 7
63D–12469–00	37 – 4
6H4–12469–01	37 – 2
6E5–12481–00	37 – 5
6H1–13117–01	7 – 5
	8 – 5
6E9–13183–70	7 – 46
	8 – 44
63D–13200–00	7 – 1
	8 – 1
6J8–13411–00	7 – 37
	8 – 35
6J8–13414–00	7 – 38

PART NO. N° PIECES	REF. NO.
6J8–13414–00	8 – 36
6L2–13416–00	7 – 39
	8 – 37
63D–13436–40	2 – 20
63D–13437–N0	10 – 44
6H5–13610–00	5 – 1
6H4–13621–A1	5 – 7
	38 – 12
6H4–13624–01	5 – 6
6H4–13641–12	5 – 4
6H4–13641–30	5 – 4
6H3–14137–00	6 – 32
6X4–14137–00	17 – 26
6H4–14146–00	6 – 16
6H3–14146–10	6 – 16
6H4–14146–10	6 – 15
6H4–14147–00	6 – 30
	38 – 30
663–14159–00	6 – 12
	38 – 23
676–14186–00	6 – 13
	38 – 24
6H4–14198–01	5 – 9
	38 – 13
	38 – 20
62W–14301–00	6 – 1
62X–14301–00	6 – 1
63B–14301–00	6 – 1
63D–14301–00	6 – 1
62W–14302–00	6 – 2
62X–14302–00	6 – 2
63B–14302–00	6 – 2
63D–14302–00	6 – 2
62W–14303–00	6 – 3
62X–14303–00	6 – 3
63B–14303–00	6 – 3
63D–14303–00	6 – 3
6A0–14325–00	9 – 23
6H3–14349–00	5 – 28
	6 – 33
63D–14380–00	6 – 34
6H4–14406–00	5 – 10
6H4–14431–02	5 – 12
6H4–14431–13	5 – 12
6H3–14457–01	5 – 13
	38 – 14
624–14485–00	3 – 4
	3 – 6

PART NO. N° PIECES	REF. NO.
6H1–14485–00	5 – 5
	5 – 5
63V–14523–00	6 – 7
6H4–14548–00	6 – 10
	38 – 26
679–14555–00	6 – 25
6H4–14567–00	6 – 31
6H2–14578–00	6 – 9
6H4–14590–01	6 – 27
	38 – 22
6K5–14592–00	6 – 5
63D–14711–00–CA	27 – 10
63D–14711–11–CA	27 – 10
692–14923–00	6 – 26
	38 – 31
676–14943–30	6 – 22
676–14943–32	6 – 22
676–14943–33	6 – 22
63D–14943–81	6 – 22
62W–14947–00	6 – 21
62X–14947–00	6 – 21
63D–14947–00	6 – 21
6H4–14948–11	6 – 24
62X–14948–12	6 – 24
6H4–14948–12	6 – 24
676–14966–00	6 – 23
	38 – 21
6H4–14980–00	6 – 18
	6 – 18
6H3–14980–10	6 – 18
6H4–14984–00	6 – 17
	38 – 15
	38 – 27
6H4–14985–01	6 – 14
	38 – 25
6H3–14992–00	6 – 19
6H4–15100–13	3 – 2
6H4–15100–30	3 – 2
6H4–15359–04–94	11 – 3
6H4–15369–A1	4 – 1
	38 – 8
6H4–15396–03–CA	4 – 2
6H4–15705–00	10 – 26
6H4–15711–02	10 – 2
6H4–15714–00	10 – 18
6H4–15717–01	10 – 20
6H4–15723–01–94	10 – 35
6J8–15723–E1	15 – 25

PART NO. N° PIECES	REF. NO.
676–15741–03	10 – 24
63D–15746–00	10 – 39
656–15748–00	10 – 42
6F5–15752–00	10 – 8
689–15755–01	10 – 15
6H4–15758–01–8D	10 – 4
6H4–15761–00	2 – 3
6H4–15762–00	10 – 6
63D–15770–00	10 – 41
63D–15771–00–1S	10 – 29
	15 – 19
6H4–15772–02	10 – 33
	15 – 23
63D–15774–00	19 – 29
6F5–15779–02	10 – 16
6H4–15787–01	10 – 14
6A0–15789–00	10 – 7
63D–21707–00	7 – 21
63D–21707–10	8 – 21
6H3–21732–00	2 – 11
6H3–21735–00	2 – 12
63D–21744–00	7 – 33
	8 – 29
6H4–21752–00	7 – 24
6H4–21757–00	7 – 31
	8 – 28
6J8–21758–00	7 – 30
63D–2175R–00	7 – 26
	8 – 24
63D–2176M–00	7 – 27
	8 – 25
6H4–21770–00	7 – 28
	8 – 26
63D–2177H–00	2 – 10
6C5–22435–00	25 – 20
6CJ–22471–10	25 – 13
6YJ–24167–00	30 – 7
	31 – 7
6YJ–24201–20	31 – 1
6YJ–24201–30	30 – 1
6YJ–24260–10	31 – 3
6Y1–24260–30	30 – 3
6Y1–24268–00	30 – 6
	31 – 6
6G1–24304–10	9 – 1
6G1–24305–05	31 – 13
6Y1–24305–06	31 – 15
61J–24306–04	31 – 8

PART NO. N° PIECES	REF. NO.
6YL–24306–54	30 – 8
6H4–24311–00	9 – 33
6H4–24312–00	9 – 31
6H4–24313–00	9 – 30
6H4–24314–00	9 – 11
6E5–24315–00	37 – 3
6Y1–24329–00	30 – 5
	31 – 5
650–24351–51	31 – 12
61J–24360–00	31 – 10
6E5–24367–01	16 – 25
650–24378–00	3 – 8
688–24378–00	9 – 28
692–24410–00	9 – 13
663–24411–00	9 – 18
692–24411–00	9 – 15
6H3–24411–10	6 – 41
6A0–24412–02	9 – 24
6A0–24413–00	9 – 14
6H4–24413–00	6 – 39
6L5–24421–00	6 – 38
6A0–24421–01	9 – 22
650–24431–A0	9 – 25
	38 – 17
648–24434–01	9 – 16
6H3–24434–10	6 – 42
648–24435–02	9 – 19
6H3–24452–10	6 – 29
6H4–24486–00	6 – 40
61N–24521–00	9 – 6
61N–24560–00	9 – 4
61N–24563–00	1 – 5
	9 – 5
6H4–24566–02	9 – 8
6YJ–24610–01	30 – 2
	31 – 2
6H4–24633–01	8 – 34
6H5–24633–10	7 – 29
6H4–24634–00	8 – 30
63D–26301–01	17 – 37
6X4–26367–00	17 – 32
	17 – 39
63B–28199–7N–D0	9 – 36
63B–28199–7N–E0	9 – 36
63B–28199–7N–F0	9 – 36
63B–28199–7N–G0	9 – 36
63B–28199–7N–H0	9 – 36
63B–28199–7N–S0	9 – 36

PART NO. N° PIECES	REF. NO.
63B–28199–8N–K0	9 – 37
63B–28199–8N–L0	9 – 37
63B–28199–8N–M0	9 – 37
63B–28199–8N–N0	9 – 37
63B–28199–8N–P0	9 – 37
63B–28199–8N–R0	9 – 37
6H4–41111–00–1S	3 – 36
6H4–41112–A0	3 – 37
	38 – 6
6H4–41113–00–1S	3 – 35
6H4–41114–A0	3 – 38
	38 – 7
6H5–41131–00–CA	27 – 9
6H4–41131–01–CA	27 – 9
6H4–41134–A0	27 – 19
	39 – 3
63D–41137–01–CA	27 – 7
63D–41213–00	19 – 3
6H4–41217–01	5 – 23
6E9–41237–00	7 – 20
	8 – 20
6H1–41237–00	7 – 16
	8 – 16
6H4–41237–00	19 – 8
6H4–41241–01	7 – 15
	8 – 15
6H4–41257–00	5 – 17
6H4–41259–01	5 – 20
6J8–41262–00	5 – 21
	22 – 47
661–41262–02	5 – 18
6H4–41271–02	5 – 19
689–41273–00	5 – 24
6J8–41274–00	5 – 22
6X4–41291–00	17 – 8
63D–41632–00	19 – 5
63D–41636–00	19 – 7
6X4–42101–G5	17 – 1
6X4–42111–02–8D	17 – 2
6X4–42115–00	17 – 22
6X4–42119–01	17 – 5
63D–42121–22–8D	17 – 52
63D–42126–00	17 – 17
6X4–42128–00	17 – 13
6X4–42131–01	17 – 49
6X4–42137–00	17 – 7
6X4–42159–00	17 – 43
6X4–42177–00	17 – 6

PART NO. N° PIECES	REF. NO.
63B–42510–01–8D	24 – 1
63B–42510–11–8D	24 – 1
63D–42510–12–8D	23 – 1
6J8–42528–00	21 – 20
62X–42610–01	2 – 1
62X–42610–71	2 – 1
63D–42610–71	2 – 1
63D–42610–81	2 – 1
6H4–42613–01–8D	2 – 8
6H4–42613–11–8D	2 – 8
6H4–42615–00	2 – 4
6H4–4261A–01	2 – 2
6H4–4261A–11	2 – 2
6H4–42651–00	2 – 5
6H4–42652–00	2 – 6
688–42675–50	2 – 18
688–42676–50	2 – 19
62X–42678–40	2 – 16
	2 – 17
63D–42678–40	2 – 16
	2 – 17
63D–42681–40	2 – 21
	2 – 22
6H1–42694–00	2 – 13
6H4–42711–07–8D	16 – 1
6H4–42711–25–8D	16 – 1
648–42715–00	19 – 19
6H4–42716–00	16 – 13
63D–42717–00	16 – 19
6E5–42724–00	16 – 14
6H4–42724–00	16 – 11
6H4–42724–20	16 – 11
6H4–42724–30	16 – 11
6H4–42725–00	16 – 27
6X4–42725–10	17 – 51
676–42726–00	16 – 21
	18 – 1
6H4–42726–00	16 – 22
688–42726–10	16 – 22
6H4–42726–40	16 – 21
6H3–42727–00	16 – 33
6X4–42728–00	18 – 5
6X4–42728–10	17 – 61
63D–42741–00–8D	16 – 18
6G1–42748–00	5 – 24
6EE–42794–40	16 – 36
6EE–42794–50	16 – 37
6H4–42815–00	16 – 2

PART NO. N° PIECES	REF. NO.
6H4–42816–00	16 – 5
63D–43111–01–8D	20 – 1
6H4–43111–05–8D	21 – 1
63D–43112–01–8D	20 – 2
6H4–43112–04–8D	21 – 2
6J8–43113–01	21 – 11
648–43114–01	21 – 8
6E0–43118–01	21 – 5
6E5–43126–02	20 – 30
63D–43128–01–8D	20 – 5
63D–43131–01	20 – 12
	21 – 9
6G5–43144–00	20 – 25
6E5–43145–01	32 – 9
6G5–43148–00	20 – 21
688–43160–01	20 – 26
6H4–43160–01	22 – 1
676–43165–00	22 – 2
688–43165–00	20 – 27
6J8–43181–01	22 – 5
6H5–43181–03	20 – 16
6H5–43185–03	20 – 17
6J8–43186–00	22 – 42
6J8–43187–00	22 – 43
6J8–43311–04–8D	21 – 18
6J8–43311–10–8D	21 – 18
63D–43311–13–8D	20 – 10
682–43318–01	22 – 10
689–43373–01	21 – 21
6J8–43611–01	22 – 20
6J8–43613–01	22 – 18
6J8–43614–00	22 – 16
6J8–43615–00	22 – 17
6H4–43616–00	22 – 30
	22 – 39
6J8–43616–10	22 – 48
6J8–43617–00	22 – 33
6J8–43617–10	22 – 41
6J8–43627–00	22 – 11
6J8–43631–00	22 – 27
6J8–43631–10	22 – 37
6J8–43633–00	22 – 28
	22 – 38
6J8–43641–00	22 – 31
	22 – 40
6H4–43659–00	22 – 19
6J8–43673–00	22 – 36
6H4–43674–00	22 – 25

PART NO. N° PIECES	REF. NO.
6J8–43681–01	22 – 35
62Y–43800–12	25 – 1
6CJ–43801–10	25 – 3
6CJ–43804–11	26 – 3
6CJ–43805–11	26 – 2
6EK–4380F–00	26 – 6
6C5–4380G–00	25 – 26
62Y–4380K–11	25 – 22
6CJ–4380R–10	25 – 8
6CJ–43810–10	25 – 2
6C5–43816–00	25 – 25
6C5–43817–10	25 – 23
6CJ–4381B–10	25 – 17
6CJ–43821–10	25 – 5
62Y–43822–00	25 – 4
6CJ–43829–10	25 – 61
6EK–4382E–00	25 – 35
6D8–4382L–00	25 – 50
6C5–43830–10	25 – 28
6C5–43831–00	25 – 62
6D8–43841–00	25 – 29
6D8–43843–00	25 – 45
6D8–43844–00	25 – 44
6H1–43844–10	25 – 48
6CJ–43845–10	25 – 59
69A–4384F–00	25 – 33
6H1–4384G–11	25 – 47
62X–4384H–00	25 – 19
6D8–4384M–00	25 – 32
6D8–43851–00	25 – 40
6C6–43853–00	25 – 37
6C5–43854–00	25 – 52
6C5–43855–10	25 – 42
6C5–43856–10	25 – 49
6C5–43861–00	25 – 11
	25 – 15
6CJ–43861–10	25 – 60
6CJ–43862–10	26 – 12
6CJ–43863–00	25 – 7
	25 – 9
6D8–43863–00	25 – 57
62X–4386K–00	26 – 7
6C5–43871–00	25 – 12
6C5–43875–00	25 – 16
6H1–43875–00	25 – 58
6CJ–43879–10	26 – 8
6C6–4387G–00	25 – 36
62Y–43880–12	26 – 1

PART NO. N° PIECES	REF. NO.
62Y–43881–10	26 – 10
6EK–43882–00	26 – 11
6H1–43883–00	25 – 30
6EK–43892–00	26 – 4
69J–43894–00	25 – 31
6C5–43895–00	25 – 51
6C5–43899–00	25 – 18
69J–4389J–00	25 – 24
	25 – 39
6X4–44100–11	17 – 21
6X4–44102–00	17 – 23
63D–44117–00	19 – 16
63D–44120–02	19 – 13
63D–44120–12	19 – 13
63D–44121–00	19 – 23
688–44122–00	19 – 27
6X4–44132–00	17 – 25
6X4–44139–01	17 – 9
63D–44144–00	28 – 51
663–44151–00	28 – 50
6X4–44159–A0–8D	17 – 44
6X4–44173–00	17 – 45
6X4–44177–00	17 – 12
6X4–44188–00	17 – 15
703–44189–20	34 – 36
	35 – 36
703–44189–30	34 – 42
	35 – 42
6X3–44191–00	17 – 47
	34 – 47
	35 – 47
688–44194–00	19 – 12
63D–44311–00	28 – 21
63D–44312–00	29 – 15
	39 – 19
63D–44316–00	28 – 27
	39 – 10
	39 – 22
63D–44322–00	28 – 22
	39 – 17
63D–44323–00	28 – 26
	39 – 20
6BG–44341–00	28 – 30
6H3–44352–00	28 – 23
	39 – 18
63D–44361–00	29 – 1
63D–44361–10	29 – 1
663–44366–00	29 – 14

PART NO. N° PIECES	REF. NO.
663–44366–00	39 – 24
63D–44367–00	29 – 4
6E5–44391–00	16 – 12
63D–44514–01	23 – 21
	24 – 21
63D–44526–00	23 – 23
	24 – 23
63D–44551–01–8D	23 – 9
	24 – 7
63D–44552–01–8D	23 – 18
	24 – 15
63D–44555–00	23 – 11
	24 – 11
687–44555–00	24 – 11
663–44575–00	23 – 16
	24 – 19
63D–45111–01–8D	27 – 1
63D–45111–11–8D	27 – 1
6H4–45113–A0	27 – 16
	38 – 18
63D–45114–A0	27 – 8
	39 – 2
63D–45123–00	27 – 11
	39 – 5
6H3–45127–00	27 – 15
	39 – 4
63D–45155–00	27 – 3
63D–45214–00	28 – 10
63D–45215–00	28 – 11
65W–45251–00	1 – 8
	20 – 39
67C–45251–00	1 – 11
	29 – 12
63D–45251–01	1 – 7
	20 – 6
63D–45300–03–8D	28 – 1
63D–45300–13–8D	28 – 1
63D–45301–03–8D	28 – 2
63D–45321–00	28 – 14
688–45341–10	28 – 9
63D–45344–00	28 – 33
63D–45361–02–8D	28 – 42
664–45371–01	1 – 10
	29 – 10
63D–45375–00	29 – 6
663–45376–00	29 – 5
6E5–45378–00	28 – 17
63D–45501–00	28 – 35

PART NO. N° PIECES	REF. NO.
63D–45501–10	28 – 35
6H4–45536–00	28 – 4
6H4–45551–01	28 – 36
6H4–45560–01	28 – 38
663–45567–01	28 – 40
663–45567–10	28 – 40
663–45567–20	28 – 40
663–45567–30	28 – 40
663–45567–40	28 – 40
663–45567–50	28 – 40
663–45567–60	28 – 40
6H4–45571–01	28 – 41
63D–45577–00	28 – 45
63D–45577–10	28 – 45
63D–45577–20	28 – 45
63D–45577–30	28 – 45
63D–45577–40	28 – 45
63D–45577–50	28 – 45
63D–45577–60	28 – 45
663–45587–01	28 – 5
663–45587–10	28 – 5
663–45587–20	28 – 5
663–45587–30	28 – 5
663–45587–40	28 – 5
663–45587–50	28 – 5
663–45587–60	28 – 5
63D–45611–00	28 – 54
63D–45631–01	28 – 56
663–45633–00	28 – 61
663–45634–00	28 – 57
63D–45635–00	28 – 59
663–45930–00	29 – 21
663–45941–01	29 – 21
69W–45943–00	29 – 21
6H5–45943–00	29 – 21
69W–45945–00	29 – 21
6H5–45945–00	29 – 21
69W–45947–00	29 – 21
663–45949–01	29 – 21
69W–45952–00	29 – 21
6H5–45952–00	29 – 21
663–45952–02	29 – 21
663–45954–01	29 – 21
663–45956–01	29 – 21
69W–45958–00	29 – 21
6H5–45958–00	29 – 21
663–45958–01	29 – 21
697–45970–00	29 – 21

PART NO. N° PIECES	REF. NO.
663–45970–60	29 – 21
663–45972–60	29 – 21
663–45974–02	29 – 21
663–45974–60	29 – 21
663–45976–00	29 – 21
663–45978–00	29 – 21
663–45987–02	29 – 16
66T–45997–00	29 – 17
6X4–47731–01	17 – 24
703–48128–10	34 – 39
	35 – 39
703–48129–00	34 – 41
	35 – 41
703–48152–10	34 – 6
	35 – 6
703–48153–00	34 – 61
	35 – 60
6X4–48154–00	17 – 18
703–48189–00	34 – 19
	35 – 19
703–48198–00	34 – 16
	35 – 16
703–48201–B2	33 – 2
	35 – 1
703–48205–B3	33 – 1
	34 – 1
703–48211–10	34 – 25
	35 – 25
703–48212–10	34 – 26
	35 – 26
703–48213–10	34 – 27
	35 – 27
6X4–48215–10	17 – 4
703–48215–11	34 – 46
	35 – 46
703–48219–10	34 – 34
	35 – 34
703–48221–10	34 – 28
	35 – 28
703–48222–20	34 – 31
703–48222–30	35 – 31
703–48223–10	34 – 32
	35 – 32
703–48225–10	34 – 33
	35 – 33
703–48227–00	34 – 30
	35 – 30
703–48232–00	34 – 2

PART NO. N° PIECES	REF. NO.
703–48232–00	35 – 2
703–48234–00	34 – 20
	35 – 20
703–48235–00	34 – 5
	35 – 5
703–48236–00	34 – 18
	35 – 18
703–48238–00	34 – 24
	35 – 24
703–48243–00	34 – 17
	35 – 17
703–48244–00	34 – 23
	35 – 23
703–48245–00	34 – 13
	35 – 13
703–48246–00	34 – 29
	35 – 29
701–48248–00	34 – 15
	35 – 15
703–48252–00	34 – 14
	35 – 14
6X4–48261–00	17 – 27
703–48261–01	34 – 4
	35 – 4
703–48264–00	34 – 8
	35 – 8
703–48265–10	34 – 11
	35 – 11
703–48268–00	34 – 7
	35 – 7
703–48271–00	34 – 3
	35 – 3
703–48281–00	34 – 35
	35 – 35
703–48284–00	34 – 58
	35 – 57
701–48287–00	34 – 45
	35 – 45
703–48293–10	34 – 44
	35 – 44
701–48320–00	33 – 3
701–48320–20	33 – 3
701–48320–30	33 – 3
701–48320–50	33 – 3
701–48320–60	33 – 3
701–48320–80	33 – 3
63D–48321–11	17 – 30
63D–48344–00	19 – 28

PART NO. N° PIECES	REF. NO.
6FM–48344–00	19 – 28
6H4–48344–00	19 – 1
703–48345–01	34 – 21
	35 – 21
703–48358–01	34 – 22
	35 – 22
63D–48511–01	23 – 34
	24 – 27
6H4–48531–11–94	16 – 7
6H4–48532–11–94	16 – 8
63D–48538–00	17 – 35
	17 – 41
6X4–48538–00	17 – 31
6X4–48538–10	17 – 38
63D–61350–00	32 – 1
63D–61351–00	32 – 2
6H4–81315–11	13 – 33
6H4–81332–00	11 – 17
6H4–81337–01	15 – 28
63D–81345–00	11 – 8
63D–81345–10	11 – 9
63D–81345–20	11 – 10
6J8–81365–A0	10 – 36
	15 – 26
6F5–81800–11	15 – 1
689–81807–12	15 – 3
689–81809–11	15 – 7
689–81810–11	15 – 9
689–81811–11	15 – 11
689–81812–11	15 – 12
689–81813–10	15 – 13
689–81820–11	15 – 14
6H4–81822–02–98	12 – 12
689–81826–10	15 – 15
6F5–81830–11	15 – 4
689–81831–00	15 – 5
689–81840–11	15 – 10
689–81847–11	15 – 6
689–81850–12	15 – 8
689–81857–11	15 – 2
6F5–81922–00	14 – 5
6G1–81941–10	13 – 2
6X4–81942–01	18 – 7
6H4–81945–00	13 – 4
6H4–81945–20	13 – 19
61A–81949–00	13 – 25
6H5–81949–01	13 – 24
6H1–81950–00	13 – 17

PART NO. N° PIECES	REF. NO.
6H4–81952–00	13 – 3
6J8–81960–00	14 – 1
6H2–81960–10	13 – 8
6H4–81975–02	14 – 3
6EE–81994–40	5 – 31
6EE–81994–50	5 – 32
6EE–81995–40	10 – 45
	15 – 32
6EE–81995–50	10 – 46
	15 – 33
6AG–81996–00	15 – 34
6H4–82105–03	13 – 1
6H4–82117–01	13 – 28
703–82119–00	11 – 13
	11 – 13
	12 – 4
	16 – 23
682–82119–01	13 – 26
63D–82127–00	24 – 20
63D–82127–10	23 – 20
	24 – 20
63D–82148–00	20 – 3
6E5–82148–00	21 – 3
6H1–82148–00	20 – 8
6H4–82150–01	13 – 9
663–82151–01	13 – 10
6G1–82151–01	36 – 5
6CJ–82181–10	26 – 5
6A0–82317–00	7 – 41
	8 – 39
6G1–82370–21	12 – 9
703–82510–13	34 – 48
	35 – 48
63D–82531–00	12 – 19
703–82531–00	34 – 51
	35 – 51
703–82532–00	34 – 50
	35 – 50
703–82540–00	34 – 55
	35 – 55
682–82556–00	18 – 3
	34 – 53
	35 – 53
689–82560–00	12 – 10
6H4–82560–00	12 – 11
63D–82563–11	13 – 29
703–82563–31	34 – 57
688–82575–02	34 – 52

PART NO. N° PIECES	REF. NO.
688–82575–02	35 – 52
6K5–82575–03	18 – 2
676–82577–01	34 – 49
	35 – 49
689–8257Y–00	18 – 4
6E5–82587–00	13 – 30
6E5–82588–00	16 – 34
688–8258A–20	34 – 54
	35 – 54
63D–82590–10	13 – 16
63D–82590–40	13 – 16
703–82591–00	34 – 59
	35 – 58
703–82592–00	34 – 60
	35 – 59
63D–82594–00	13 – 14
6H4–83354–00	11 – 7
703–83383–11	34 – 56
	35 – 56
6Y5–8350T–E0	36 – 1
6Y5–83553–01	36 – 4
6G1–83557–00	12 – 21
6E5–83558–00	23 – 30
	28 – 19
6E5–83558–10	28 – 19
6FM–83589–00	16 – 31
6R3–83614–00	13 – 31
6Y5–83653–20	36 – 6
63D–83672–11	23 – 31
63D–84301–00	16 – 33
63D–84342–00	16 – 30
682–84381–00	14 – 8
6Y8–84383–00	36 – 3
6J8–85410–00	16 – 27
6H4–85415–10	16 – 29
63D–85520–01	11 – 4
63D–85533–00	11 – 5
63D–85533–10	11 – 5
63D–85540–04	12 – 1
63D–85550–00	11 – 1
63D–85550–10	11 – 1
63D–85560–00	11 – 2
63D–85560–10	11 – 2
6H5–85570–00	12 – 6
63D–85580–00	11 – 6
6H1–85711–60	5 – 30
63D–85720–01	7 – 50
63D–85720–11	8 – 47

PART NO. N° PIECES	REF. NO.
63D–W0001–01	38 – 1
63D–W0001–21	39 – 1
6H4–W0004–00	5 – 2
63D–W0078–02	1 – 12
	39 – 16
63D–W0090–13–1S	3 – 1
63D–W0090–33–1S	3 – 1
6H4–W0093–03	38 – 19
656–W2810–02	9 – 35
63B–Y130E–06	10 – 1
90101–06020	20 – 38
90101–06021	3 – 19
90101–06128	37 – 11
90101–08339	21 – 14
90101–09M01	32 – 7
90101–10047	21 – 23
90101–12014	17 – 53
90101–12063	20 – 40
90105–06M15	13 – 22
90105–06M16	13 – 23
90105–06M18	21 – 22
90105–08M61	28 – 43
90109–06M39	7 – 7
	8 – 7
90109–06M40	7 – 8
	8 – 8
90109–06M43	19 – 4
90109–08229	23 – 22
	24 – 22
90109–12M21	23 – 15
	24 – 17
90116–06M22	13 – 5
90116–10062	23 – 7
	24 – 9
90116–18M52	20 – 34
90119–06273	16 – 6
90119–06277	2 – 9
90119–06290	7 – 43
	8 – 41
90119–06291	16 – 17
90119–06306	7 – 44
	8 – 42
90119–06M13	3 – 10
90119–06M51	12 – 2
90119–06MA2	5 – 8
	10 – 32
	15 – 22
90119–06MA3	3 – 29

NUMERICAL INDEX
INDEX NUMERIQUE

PART NO. N° PIECES	REF. NO.
90119–06MA3	3 – 34
	10 – 34
	15 – 24
90119–06MA5	3 – 41
90119–08015	3 – 28
90119–08019	3 – 9
90119–08185	28 – 29
	39 – 23
90119–08M83	27 – 6
90149–14M12	21 – 7
90152–05007	17 – 10
90152–05010	28 – 12
90157–05M19	30 – 4
	31 – 4
90157–06M01	16 – 24
90157–06M13	19 – 10
90159–06M21	15 – 30
90159–06M22	15 – 31
90170–09M03	32 – 5
90170–12138	28 – 37
90170–18M10	20 – 35
90171–16011	29 – 19
90179–06M24	12 – 17
90179–16M05	11 – 15
90183–05M06	2 – 15
90185–08018	23 – 25
	24 – 25
90185–09M01	32 – 4
90185–10027	23 – 8
	24 – 10
90185–12M12	17 – 60
90185–22043	20 – 15
	21 – 13
90201–05652	6 – 6
90201–06060	10 – 21
90201–08M93	7 – 3
	8 – 3
90201–09425	23 – 24
	24 – 24
90201–10081	32 – 8
90201–10M20	32 – 3
90201–12035	17 – 57
90201–12062	20 – 41
90201–12426	20 – 42
	21 – 25
90201–12M16	23 – 12
	24 – 12
90201–13M19	23 – 14

PART NO. N° PIECES	REF. NO.
90201–13M19	24 – 14
90201–16M44	11 – 16
90201–22429	28 – 55
90201–22M03	20 – 14
	21 – 12
90201–27M00	28 – 34
90201–30M00	23 – 2
	24 – 3
90201–50306	4 – 11
90202–05088	7 – 17
	8 – 17
90202–07M07	19 – 15
90202–12031	22 – 9
	22 – 14
90202–12060	29 – 2
90202–25M04	23 – 13
	24 – 13
90202–26M45	14 – 9
90206–12052	16 – 3
90206–12M16	22 – 15
90206–12M22	17 – 55
90209–06M05	5 – 16
90243–04M01	21 – 6
90249–06M19	20 – 22
90249–06M23	22 – 32
90249–06M24	22 – 32
90249–07M25	22 – 45
90249–12M27	22 – 12
90249–12M28	22 – 7
90250–06023	28 – 60
90266–04M01	2 – 7
90280–03024	28 – 25
	39 – 25
90338–05M03	2 – 14
	16 – 24
90338–05M11	13 – 13
90340–08002	28 – 7
90340–14M06	3 – 24
90386–07M58	19 – 24
90386–08032	17 – 16
90386–10025	20 – 19
90386–10M16	20 – 18
90386–12003	17 – 58
90386–12069	16 – 4
90386–18M35	20 – 32
90386–18M44	20 – 37
90386–18M92	20 – 31
90386–22M15	20 – 13

PART NO. N° PIECES	REF. NO.
90386–22M69	21 – 10
90386–26MA3	17 – 48
90386–30M60	23 – 6
	24 – 6
90386–30M77	23 – 4
	24 – 2
90386–30M78	23 – 3
	24 – 4
90387–06119	7 – 42
	8 – 40
90387–06M05	13 – 21
90387–06M41	16 – 16
90387–06M65	15 – 29
90387–06M66	10 – 38
90387–06M69	10 – 9
90387–07M64	22 – 21
90387–08M03	21 – 15
90387–10M42	32 – 6
90387–12M02	17 – 56
90389–22M01	29 – 18
90430–08003	1 – 9
	28 – 8
	39 – 6
90430–12072	29 – 3
90430–14115	3 – 25
	38 – 4
90440–14M00	14 – 7
	20 – 44
90445–07M23	7 – 10
	8 – 10
90445–07M24	3 – 14
90445–07M27	3 – 13
90445–07M31	28 – 18
90445–07M44	7 – 9
	8 – 9
90445–07M46	3 – 12
90445–07M87	7 – 45
	8 – 43
90445–07MA3	3 – 16
90445–07MA5	5 – 26
90445–07MA6	7 – 11
	8 – 11
90445–07ME9	28 – 18
90445–07MF1	23 – 29
90445–09057	9 – 29
90445–09063	9 – 27
90445–09M37	3 – 39
90445–11M05	31 – 11

PART NO. N° PIECES	REF. NO.
90445–11M06	31 – 9
90445–11M15	7 – 22
	8 – 22
90445–11M17	7 – 35
	8 – 32
90445–11M23	7 – 32
	8 – 27
90445–11M30	37 – 8
90445–11M66	37 – 9
90446–10M01	7 – 36
	8 – 33
90446–10M02	12 – 20
90464–03M15	11 – 11
90464–05M16	12 – 22
90464–06M19	5 – 25
90464–07M20	7 – 14
	8 – 14
	13 – 27
90464–08M07	16 – 28
90464–09M42	17 – 33
90464–12M35	14 – 6
90464–15M11	9 – 34
	12 – 3
90464–15M27	13 – 12
90464–16021	16 – 23
90465–06M86	7 – 49
	23 – 27
90465–11M10	20 – 45
	23 – 28
	28 – 20
90465–13M11	23 – 33
90465–13M30	7 – 25
90467–06016	3 – 15
	3 – 17
	5 – 27
90467–08004	3 – 40
	5 – 29
	7 – 40
	8 – 38
	9 – 3
	9 – 12
	9 – 32
90467–10M04	7 – 34
	8 – 31
	37 – 10
90467–11M08	7 – 23
	7 – 48
	8 – 23

PART NO. N° PIECES	REF. NO.
90467–11M08	8 – 46
	37 – 12
90468–05M03	7 – 18
	8 – 18
90468–07M02	7 – 12
	7 – 13
	7 – 47
	8 – 12
	8 – 13
	8 – 45
90468–10005	17 – 36
	17 – 42
90468–18008	19 – 2
	19 – 14
90480–09M21	16 – 15
90480–13M24	13 – 20
90480–25161	12 – 7
90501–10227	10 – 43
90501–10326	6 – 8
90501–12082	19 – 18
90501–16M01	28 – 58
90501–23215	17 – 14
90502–10M04	22 – 4
90502–16M02	20 – 29
90506–12M25	22 – 6
90506–14M24	20 – 23
90506–32M22	22 – 24
90508–18M23	22 – 29
90508–18M24	22 – 29
90508–20M22	22 – 49
90508–25M21	22 – 44
90508–26117	19 – 6
90510–08002	10 – 19
91318–03005	25 – 56
91318–03025	25 – 55
91318–05030	25 – 54
91318–05045	25 – 27
91380–05020	25 – 64
91490–20010	17 – 11
	17 – 20
	22 – 26
91490–20012	19 – 26
91490–30025	29 – 20
91690–30010	22 – 3
91690–30012	20 – 28
91690–30020	20 – 20
91690–40018	10 – 3
92903–06100	10 – 11

PART NO. N° PIECES	REF. NO.
92903–06600	10 – 12
	11 – 20
	19 – 22
92903–08600	10 – 31
	12 – 15
	15 – 18
	15 – 21
92990–05100	9 – 21
92990–06600	13 – 7
	16 – 26
92990–08200	19 – 25
92990–08600	21 – 16
	34 – 38
	35 – 38
92990–12200	17 – 54
92990–12600	17 – 59
92995–10600	21 – 24
92995–18600	20 – 36
93101–22M00	28 – 49
	39 – 14
93101–25M57	28 – 31
	39 – 12
93102–23096	11 – 12
93102–25M28	4 – 3
	38 – 10
93104–16M01	4 – 4
	38 – 9
93106–09014	28 – 15
	39 – 8
93210–04228	6 – 28
93210–04230	6 – 20
	38 – 29
93210–04N51	25 – 46
93210–064A5	25 – 41
93210–07003	28 – 52
93210–08287	31 – 14
	31 – 16
93210–13M04	7 – 6
	8 – 6
93210–16275	32 – 10
93210–19MA7	7 – 2
	8 – 2
93210–29M94	23 – 5
	24 – 5
93210–32738	1 – 6
	9 – 7
	38 – 16
93210–33MG4	28 – 16

PART NO. N° PIECES	REF. NO.
93210–33MG4	39 – 7
93210–44006	25 – 10
93210–48001	28 – 32
	39 – 11
93210–49001	25 – 6
93210–56001	4 – 5
	38 – 11
93210–59MG7	28 – 24
	39 – 9
	39 – 21
93210–64488	25 – 63
93210–69MG6	28 – 47
	39 – 13
93210–74MG5	28 – 46
	39 – 15
93306–001U1	28 – 44
93306–305U8	4 – 9
93315–32224	28 – 3
93317–22204	28 – 48
93332–00001	28 – 6
93332–00003	28 – 39
93410–18M05	20 – 33
93410–28M06	23 – 10
	24 – 8
93430–06024	34 – 12
	35 – 12
93430–06M02	10 – 25
	22 – 22
93440–62057	4 – 10
93501–04M02	19 – 17
93501–08001	25 – 43
93503–16003	25 – 14
93505–32038	25 – 38
93602–20M02	4 – 15
93604–08062	28 – 28
93604–26256	25 – 53
93606–12019	3 – 11
	27 – 5
	27 – 17
	29 – 7
93700–06002	17 – 3
93700–06M03	20 – 11
	21 – 19
94702–00247	1 – 4
	3 – 42
94702–00271	1 – 4
	3 – 42
95303–06600	19 – 11

PART NO. N° PIECES	REF. NO.
95380–03600	6 – 36
	9 – 17
95380–05600	7 – 19
	8 – 19
	19 – 9
	28 – 13
	34 – 9
	35 – 9
95380–06600	10 – 13
	10 – 23
	13 – 6
	17 – 19
	34 – 43
	35 – 43
95380–08600	9 – 10
	21 – 17
95380–10600	21 – 26
95380–12600	20 – 43
95380–12800	23 – 17
	24 – 18
95670–06640	12 – 16
97013–06012	14 – 4
97013–06014	9 – 9
97013–06018	11 – 19
97013–06030	10 – 10
97013–06045	19 – 21
97013–08016	15 – 17
97013–08025	10 – 30
	15 – 20
97013–08050	12 – 14
97380–05025	34 – 10
	35 – 10
97380–08030	34 – 37
	35 – 37
97513–06512	6 – 43
97513–06520	19 – 20
97513–08514	15 – 27
97513–08520	10 – 37
97513–08530	15 – 16
97595–05516	16 – 9
97602–04316	26 – 9
97780–60525	16 – 20
97780–60920	17 – 46
97803–04010	6 – 35
97885–06008	20 – 4
	21 – 4
97885–06040	5 – 14
97885–06055	5 – 15

PART NO. N° PIECES	REF. NO.
97980–04114	6 – 4
	38 – 28
97980–05214	5 – 3
97980–06214	16 – 32
97980–06216	18 – 6
97985–05210	11 – 18
97985–06216	17 – 50
	23 – 32
97D95–06010	20 – 24
97D95–06014	17 – 34
	17 – 40
97D95–06016	13 – 32
97D95–06020	10 – 22
97D95–06095	5 – 11
97E75–08530	23 – 19
	23 – 26
	24 – 16
	24 – 26
	27 – 12
	27 – 13
	27 – 14
97E75–08545	27 – 4
	27 – 18
97E75–08560	29 – 9
97E75–10640	29 – 8
97E95–06510	20 – 9
97E95–06512	13 – 15
	14 – 2
	27 – 2
97E95–06514	12 – 5
	12 – 18
	12 – 23
	13 – 11
97E95–06516	10 – 5
	19 – 30
97E95–06520	4 – 6
	12 – 8
	16 – 10
	16 – 35
97E95–06525	9 – 2
	13 – 18
	20 – 7
97E95–06530	12 – 13
	17 – 29
97E95–06535	10 – 27
97E95–06540	9 – 26
	10 – 40
97E95–08525	29 – 11

PART NO. N° PIECES	REF. NO.
97E95–08535	29 – 13
97E95–08540	17 – 28
98503–05028	9 – 20
98580–04006	34 – 40
	35 – 40
98580–04008	6 – 11
98780–04016	3 – 21
98980–03006	6 – 37
99001–08600	28 – 53
99002–03600	25 – 34
99009–32500	25 – 21
99080–05600	22 – 23
	22 – 34
	22 – 46
99080–10600	22 – 8
	22 – 13
99530–10014	10 – 28
9E450–04533	36 – 2