YAMAHA

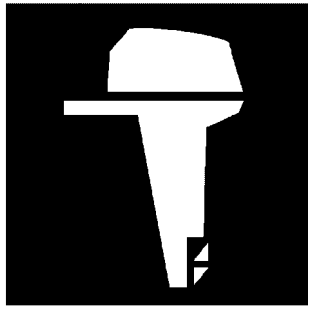

PARTS CATALOGUE
CATALOGUE DE PIECES DETACHEES

4CMH'20 (6GP5)

YAMAHA
GENUINE
Parts & Accessories

1U6GP-300FA

( )

4CMH
PARTS CATALOGUE
©2020 by Yamaha Motor Co., Ltd.
1st edition, May 2020
All rights reserved.
Any reprinting or unauthorized use
without the written permission of
Yamaha Motor Co., Ltd.
is expressly prohibited.
Printed in Japan.

4CMH
CATALOGUE DE PIECES DETACHEES
©2020 par Yamaha Motor Co., Ltd.
1re édition, mai 2020
Tous droits réservés
Toute réimpression ou utilisation
non autorisée sans la permission écrite
de la Yamaha Motor Co., Ltd.
est formellement interdite.
Imprimé au Japon

FOREWORD

This Parts Catalogue is related to the parts for the model(s) on the cover page. When you are ordering replacement parts, please refer to this Parts Catalogue and quote both part numbers and part names correctly.

1. Modifications or additions which have been made after the issue of the Parts Catalogue will be announced in the Parts News.
   It is advisable that you make the necessary corrections to the Parts Catalogue according to the Parts News.

2. Abbreviations
   The following abbreviations are used in this Parts Catalogue.
   "UR" Use specified parts number.
   "UN" Use as many as needed.
   "AP" Alternate Parts
   "LM" Locally Made (Parts need to be ordered locally)
   "F#" Frame No. (Applicable machine No.)
   "O/S" Over Size

3. The number of components for assembly
   - Parts, which are to be supplied in an assembly, are listed with a dot (.) in front of the part name as shown below.
   - The numeral appearing to the right of each component part indicates the quantity of parts for each assembly unit.

PART NO.	DESCRIPTION	Q'TY	REMARKS
2F5–83310–60	FRONT FLASHER LIGHT ASSY	2	
115–83311–60	.BULB (6V–18W)	1	

4. Applicable colours of graphics are represented in the "REMARKS" as shown below.

PART NO.	DESCRIPTION	Q'TY	REMARKS
2N4–24110–00–X5	FUEL TANK COMP.	2	MXR
3J1–24240–10	.GRAPHIC, FUEL TANK	1	FOR MXR

5. Note that the illustrations for reference in finding parts numbers are not to be used for assembling. When assembling, please use the applicable service manual.

6. The asterisk (*) before a reference number indicates modified items after the first edition.

7. Applicable Serial No.
   Engine Serial No.

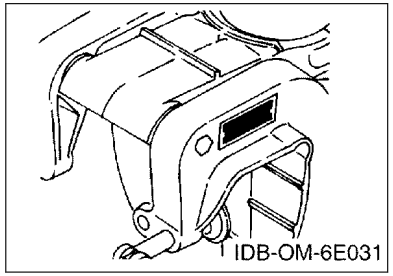

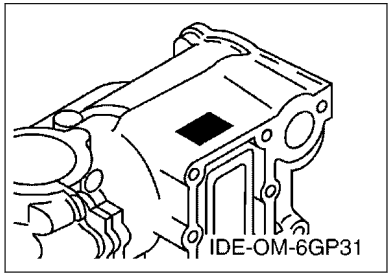

8. Applicable Engine Starting Serial No.

Model	Serial No.	Model	Serial No.
4C	6GPK-1004612		

9. Applicable Colour Code

Abbreviation	Colour Name	Colour Code
DBN1	DARK BLUISH GRAY 1	008D

10. Quantity Column Information

Column No.	Name Of Q'ty Column	Applicable Model
1	6GP5	4CMH

AVANT–PROPOS

Ce catalogue de pièces détachées concerne les pièces pour le(s) modèle(s) indiqué(s) sur la page de couverture. Lorsque vous commandez des pièces de rechange, veuillez vous référer à ce catalogue de pieces détachées et indiquer clairement les numéros et les noms des pièces détachées.

1. Les modifications ou ajouts ayant été effectués après la parution du catalogue de pièces détachées seront décrits dans les Bulletins d'information concernant les pièces détachées.
   Il est recommandé que vous apportiez les corrections nécessaires au catalogue des pièces détachées en vous référant aux Bulletins d'information.

2. Abréviations
   Dans ce catalogue, les abréviations suivantes sont utilisées:
   "UR" Utiliser le numéro de pièces spécifié.
   "UN" Utiliser autant que nécessaire.
   "AP" Pièces de substitution
   "LM" Fabrication locale (les pièces doivent être commandées localement.)
   "F#" N° de cadre (applicable au N° de série)
   "O/S" Surdimensionné

3. Nombre de pièces d'un assemblage
   - Les pièces fournies comme composants d'un assemblage sont précédées d'un point (.) de la manière indiquée ci–dessous.
   - Le chiffre apparaissant à la droite de chaque composant indique la quantité de pièces pour chaque unité d'assemblage.

N° PIECES	DESCRIPTION	QTE	REMARQUES
2F5–83310–60	ENS. CLIGNOTANT AVANT	2	
115–83311–60	.AMPOULE (6V–18W)	1	

4. Les couleurs concernant les graphiques sont indiquées dans la colonne "REMARQUES", comme indiqué ci–dessous.

N° PIECES	DESCRIPTION	QTE	REMARQUES
2N4–24110–00–X5	RESERVOIR A ESSENCE.	2	MXR
3J1–24240–10	.GRAPHIQUE	1	POUR MXR

5. Veuillez noter que les illustrations sont indiquées à titre de référence pour trouver les numéros de pièces, non pour être utilisées lors de l'assemblage. Lors de l'assemblage, veuillez utiliser le manuel d'entretien adéquat.

6. L'astérisque (*) placé devant un numéro de référence indique des éléments qui ont été modifiés après la première édition.

7. N° de série applicable
   N° de Série du moteur

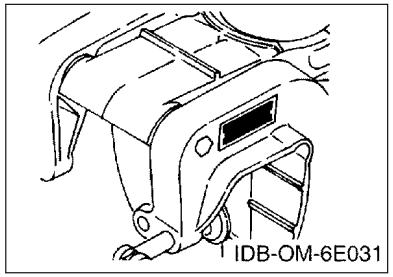

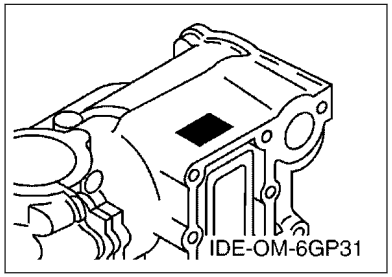

8. N° de série initial du moteur applicable

Modèle	N° de série	Modèle	N° de série
4C	6GPK-1004612		

9. Code couleur applicable

Abréviation	Nom de la couleur	Code couleur
DBN1	DARK BLUISH GRAY 1	008D

10. Informations relatives à la colonne Quantité

N° de la colonne	Nom de la colonne Qté	Modèle applicable
1	6GP5	4CMH

CONTENTS

SCHEDULED SERVICE PARTS.....1
TOP COWLING.....2
CYLINDER & CRANKCASE.....4
INTAKE.....6
STARTER.....8
GENERATOR.....10
ELECTRICAL.....11
BOTTOM COWLING.....12
CONTROL.....14
UPPER CASING & BRACKET.....16
LOWER CASING & DRIVE.....18
FUEL TANK.....21
REPAIR KIT.....22

INDEX

NUMERICAL INDEX.....24

TABLE DES MATIERES

PIECES MAINTENANCE PERIODIQUE.....1
CAPOT SUPERIEUR..... 2
CYLINDRE & CARTER..... 4
ADMISSION.....6
DEMARREUR.....8
GENERATRICE.....10
ELECTRIQUE.....11
CAPOT INFERIEUR.....12
COMMANDE..... 14
FOURREAU & SUPPORT.....16
BOITIER D HELICE TRANSMISSION..... 18
RESERVOIR A CARBURANT.....21
KITS DE REPARATION..... 22

INDEX

INDEX NUMERIQUE.....24

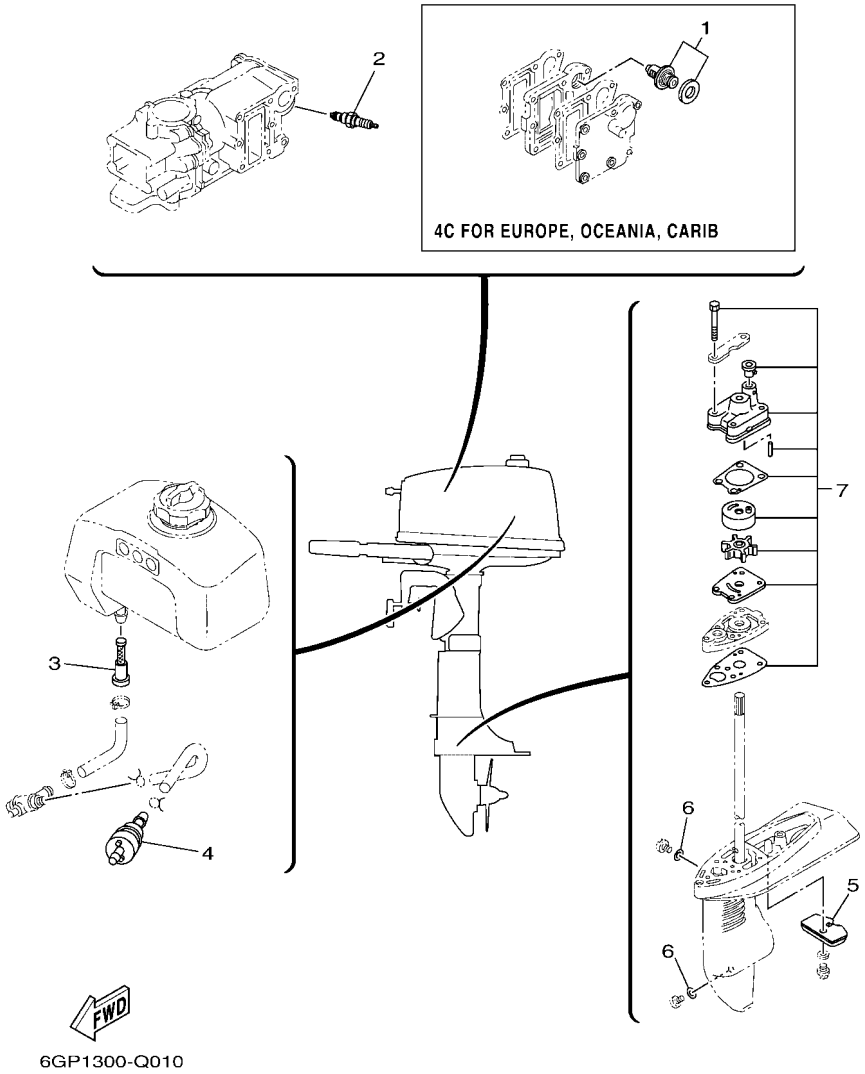

FIG. 1 SCHEDULED SERVICE PARTS — PIECES MAINTENANCE PERIODIQUE

REF. NO.	PART NO. N° PIECES	DESCRIPTION DESCRIPTION	6GP5					REMARKS REMARQUES
1	6E5–12411–02	THERMOSTAT THERMOSTAT	1					
2	94702–00040	PLUG, SPARK (NGK B7HS) BOUGIE D'ALLUMAGE (NGK B7HS)	1					UR UR
	94702–00272	PLUG, SPARK (NGK BR7HS) BOUGIE D'ALLUMAGE (NGK BR7HS)	1					UR UR
3	6L5–24251–00	STRAINER 1 FILTRE 1	1					
4	68T–24251–01	STRAINER 1 FILTRE 1	1					
5	6L5–45251–03	ANODE ANODE	1					
6	90430–08003	GASKET JOINT	3					
7	6E0–W0078–A4	WATER PUMP REPAIR KIT KIT DE REPARATION DE LA POMPE	1					

FIG. 2 TOP COWLING — CAPOT SUPERIEUR

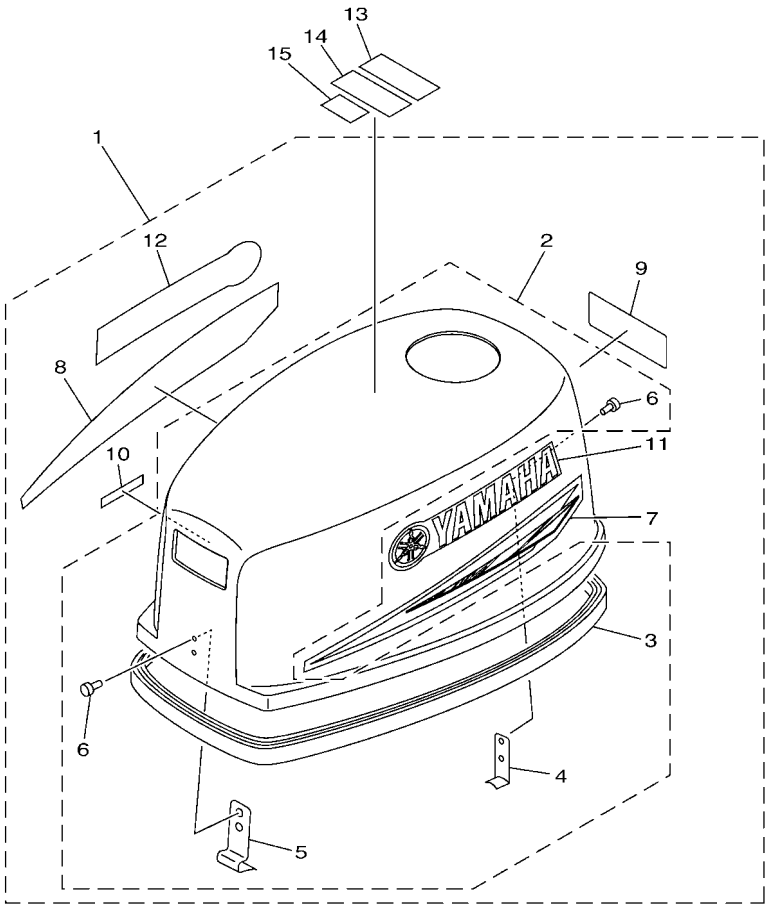

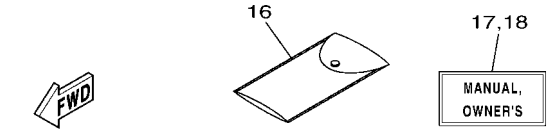

6GP4300-T020

REF. NO.	PART NO. N° PIECES	DESCRIPTION DESCRIPTION	6GP5					REMARKS REMARQUES
1	6GP–42610–00	TOP COWLING ASSY CAPOT (ENS.)	1					
2	6GP–4261A–00	.TOP COWLING W/O GRAPHICS .CAPOT SUPERIEUR SANS GRAPHIQUE	1					
3	6E0–42615–00	..SEAL ..JOINT	1					
4	6E0–42647–01	..HOLDER, CLAMP BAND ..SUPPORT, SANDOW DE SERRAGE	1					
5	6E0–42651–02	..HOOK ..CROCHET	1					
6	90266–04M00	..RIVET ..RIVET	4					
7	6E0–42675–40	.GRAPHIC, SIDE 1 .EMBLEME	1					
8	6E0–42676–40	.GRAPHIC, SIDE 2 .EMBLEME	1					
9	6E0–42678–40	.GRAPHIC, REAR .ADHESIF, ARRIERE	1					
10	6X3–44191–00	.INDICATOR, SHIFT .ETIQUETTE, EMBRAYAGE	1					
11	6E0–42681–40	.MARK, COWLING .ADHESIF, CAPOT	1					
12	6E0–42681–40	.MARK, COWLING .ADHESIF, CAPOT	1					
13	6EE–42698–40	LABEL, WARNING (FUEL) ETIQUETTE, AVERTISSEMENT	1					
14	6EE–42698–50	LABEL, WARNING (FUEL) ETIQUETTE, AVERTISSEMENT	1					
15	6EE–2817K–00	LABEL, FUEL ETIQUETTE ESSENCE	1					
16	656–W2810–02	TOOL KIT TROUSSE A OUTILS	1					AP AP
17	6GP–28199–74–E0	MANUAL,OWNER'S MANUEL D'UTILISATION	1					UR (E) UR (E)
	6GP–28199–74–F0	MANUAL,OWNER'S MANUEL D'UTILISATION	1					UR (F) UR (F)
	6GP–28199–74–S0	MANUAL,OWNER'S MANUEL D'UTILISATION	1					UR (ES) UR (ES)
	6GP–28199–74–G0	MANUAL,OWNER'S MANUEL D'UTILISATION	1					UR (D) UR (D)
	6GP–28199–74–D0	MANUAL,OWNER'S MANUEL D'UTILISATION	1					UR (NL) UR (NL)
	6GP–28199–74–H0	MANUAL,OWNER'S MANUEL D'UTILISATION	1					UR (I) UR (I)
18	6GP–28199–84–K0	MANUAL,OWNER'S MANUEL D'UTILISATION	1					UR (DK) UR (DK)
	6GP–28199–84–R0	MANUAL,OWNER'S MANUEL D'UTILISATION	1					UR (GR) UR (GR)
	6GP–28199–84–P0	MANUAL,OWNER'S MANUEL D'UTILISATION	1					UR (P) UR (P)
	6GP–28199–84–N0	MANUAL,OWNER'S MANUEL D'UTILISATION	1					UR (N) UR (N)
	6GP–28199–84–M0	MANUAL,OWNER'S MANUEL D'UTILISATION	1					UR (S) UR (S)

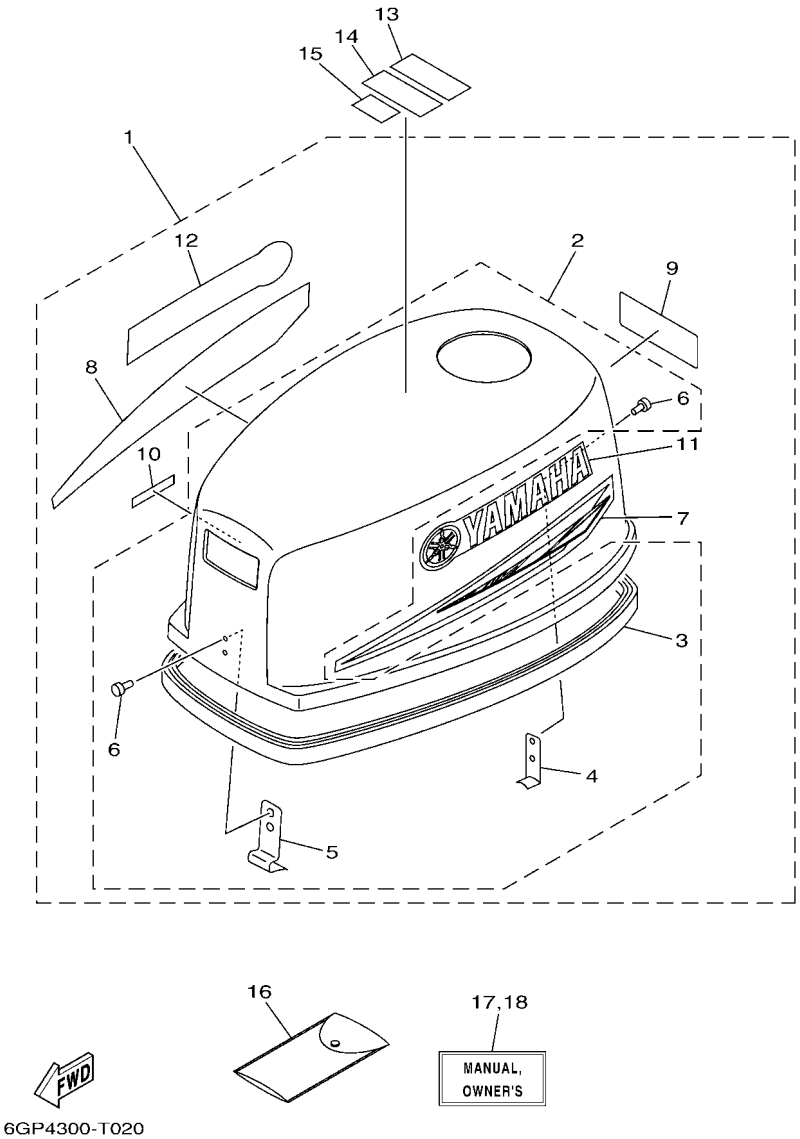

FIG. 2 TOP COWLING — CAPOT SUPERIEUR

REF. NO.	PART NO. N° PIECES	DESCRIPTION DESCRIPTION	6GP5					REMARKS REMARQUES
18	6GP–28199–84–L0	MANUAL,OWNER'S MANUEL D'UTILISATION	1					UR (SF) UR (SF)

FIG. 3 CYLINDER & CRANKCASE — CYLINDRE & CARTER

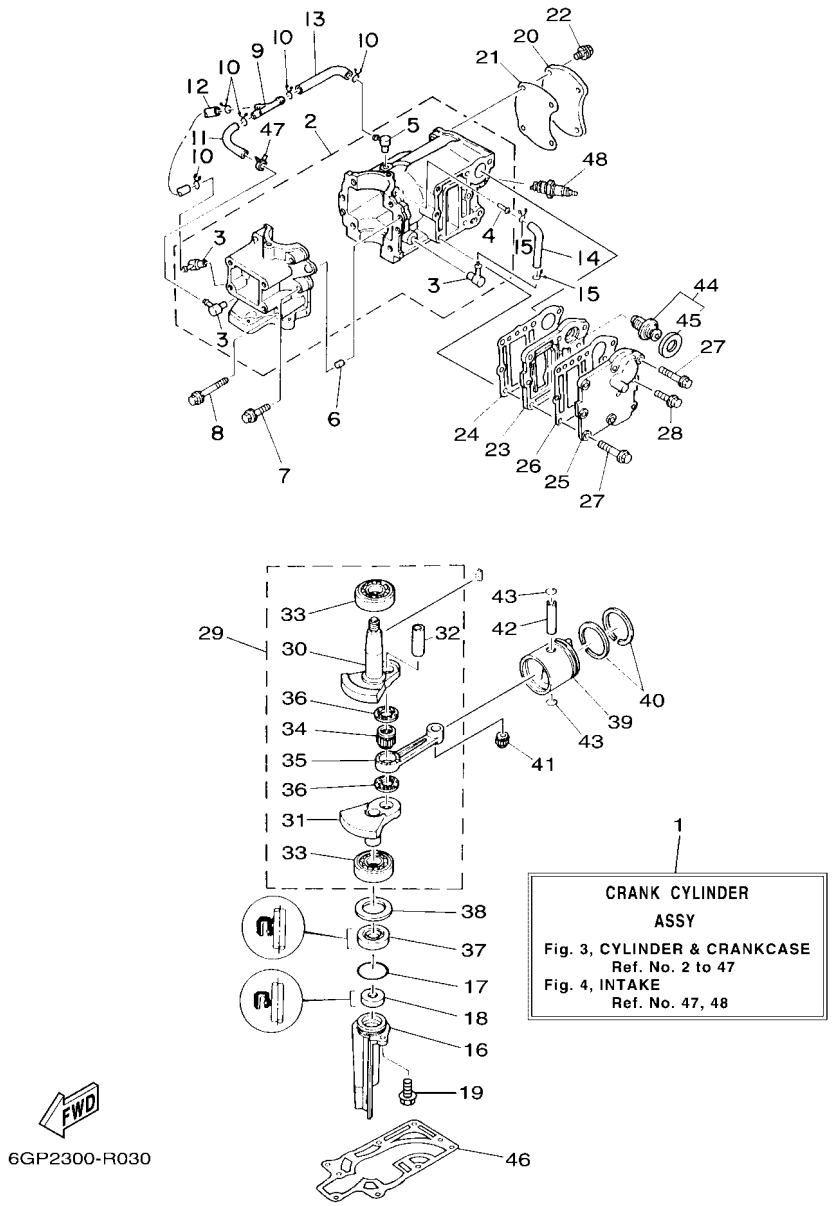

REF. NO.	PART NO. N° PIECES	DESCRIPTION DESCRIPTION	6GP5					REMARKS REMARQUES
1	6E3–W0090–05–1S	CRANK CYLINDER ASSY EMBIELLAGE CYLINDRE (ENS.)	1					
2	6E3–15100–02	CRANKCASE ASSY CARTER DE MOTEUR COMPLET	1					
3	650–11370–01	.CHECK VALVE ASSY .CLAPET (ENS.)	3					
4	624–14485–00	.PIPE, JOINT .DURITE	1					
5	6E5–11372–01	.NIPPLE, HOSE .RACCORD, TUYAU	1					
6	93606–12019	PIN, DOWEL GOUPILLE	2					
7	90105–06M16	BOLT, FLANGE BOULON, A COLLERETTE	4					
8	90105–06M17	BOLT, FLANGE BOULON, A COLLERETTE	2					
9	6E0–24378–00	PIPE, JOINT 3 DURITE RACCORDEMENT 3	1					
10	90467–06016	CLIP JONC	5					
11	90445–07M00	HOSE (L100) DURITE (L100)	1					
12	90445–07M28	HOSE (L70) DURITE (L70)	1					
13	90445–07M32	HOSE (L120) DURITE (L120)	1					
14	90445–07M28	HOSE (L70) DURITE (L70)	1					
15	90467–06016	CLIP JONC	2					
16	6E0–15396–03–CA	HOUSING, OIL SEAL LOGEMENT DE JOINT SPY	1					
17	93210–31MJ5	O-RING JOINT TORIQUE	1					
18	93101–10M25	OIL SEAL JOINT SPY	1					
19	97E95–06516	BOLT, HEXAGON W/W DEEP RECESS VIS HEXAGONAL AVC RONDELLE	1					
20	6E3–11191–01–1S	COVER, CYLINDER HEAD 1 COUVERCLE, CULASSE 1	1					
21	6E3–11193–A1	GASKET, HEAD COVER 1 JOINT, COUVERCLE DE CULASSE 1	1					
22	90105–06039	BOLT, FLANGE BOULON, A COLLERETTE	4					
23	6E3–41111–01–1S	INNER COVER, EXHAUST PLAQUE, ECHAPPEMENT	1					
24	6E3–41112–A1	GASKET, EXHAUST INNER COVER JOINT, PLAQUE D'ECHAPPEMENT	1					
25	6E3–41113–01–1S	OUTER COVER, EXHAUST COUVERCLE, ECHAPPEMENT	1					
26	6E3–41114–A1	GASKET, EXHAUST OUTER COVER JOINT, COUVERCLE D'ECHAPPEMENT	1					
27	90105–06037	BOLT, FLANGE BOULON, A COLLERETTE	8					

FIG. 3 CYLINDER & CRANKCASE — CYLINDRE & CARTER

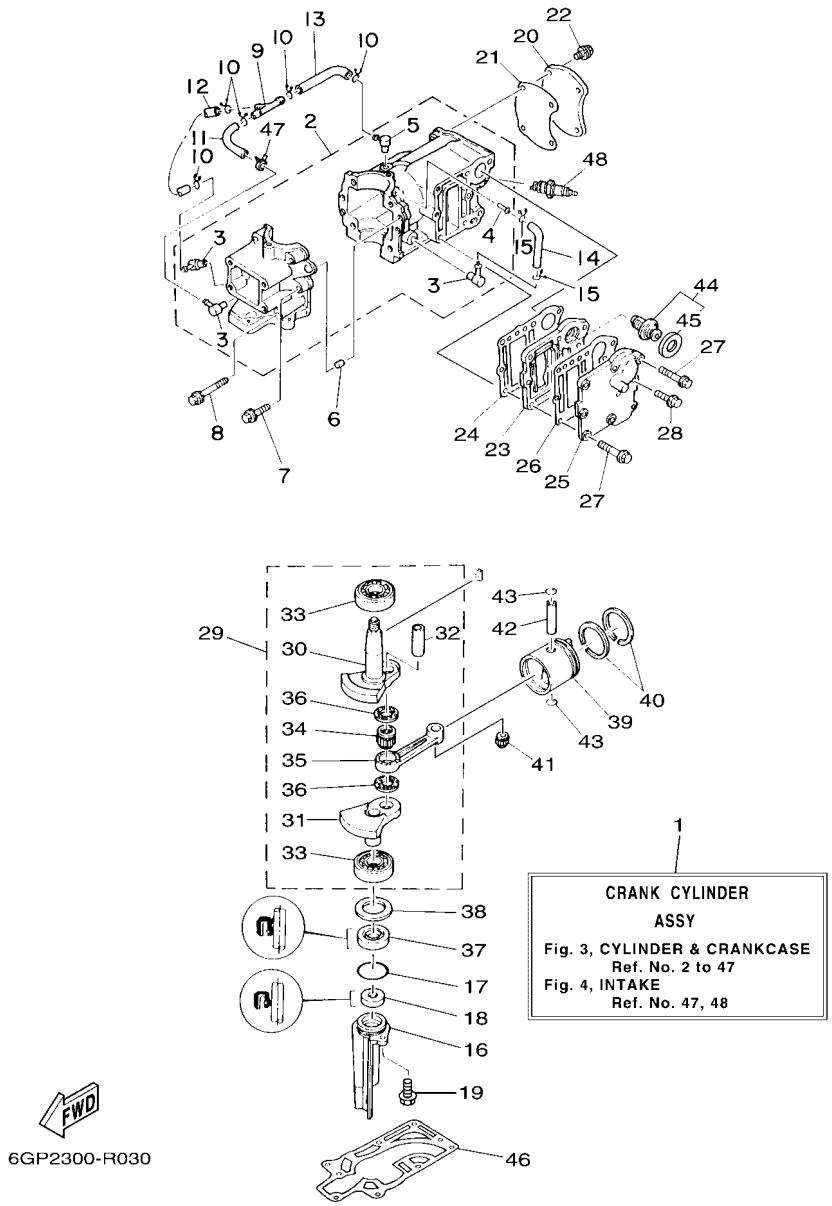

REF. NO.	PART NO. N° PIECES	DESCRIPTION DESCRIPTION	6GP5					REMARKS REMARQUES
28	90105–06039	BOLT, FLANGE BOULON, A COLLERETTE	1					
29	6E3–11400–00	CRANKSHAFT ASSY VILEBREQUIN COMPLET	1					
30	6E3–11412–00	.CRANK 1 .MASSOLOTTE DE VILEBREQUIN 1	1					
31	6E3–11422–00	.CRANK 2 .MASSOLOTTE DE VILEBREQUIN 2	1					
32	6G1–11681–00	.PIN, CRANK 1 .MANETON, VILEBREQUIN 1	1					
33	93306–204U0	.BEARING .ROULEMENT	2					
34	93310–418V1	.BEARING .ROULEMENT	1					
35	6E0–11651–01	.ROD, CONNECTING .BIELLE NUE	1					
36	90209–18112	.WASHER .RONDELLE	2					
37	93101–20M29	OIL SEAL JOINT SPY	1					
38	90201–32M48	WASHER, PLATE RONDELLE, PLATE	1					
39	6E3–11631–00–98	PISTON (STD) PISTON (STD)	1					
40	6J1–11610–00	PISTON RING SET (STD) JEU DE SEGMENTS (STD)	1					
41	93310–112V0	BEARING ROULEMENT	1					
42	6G1–11633–00	PIN, PISTON AXE, PISTON	1					
43	93450–13022	CIRCLIP CIRCLIP	2					
44	6E5–12411–02	THERMOSTAT THERMOSTAT	1					
45	6E5–12412–00	.SEAL, THERMOSTAT .JOINT, THERMOSTAT	1					
46	6E0–45113–A1	GASKET, UPPER CASING JOINT, TUBE D'ARBRE	1					
47	90468–07M02	CLIP JONC	1					
48	94702–00272	PLUG, SPARK (NGK BR7HS) BOUGIE D'ALLUMAGE (NGK BR7HS)	1					

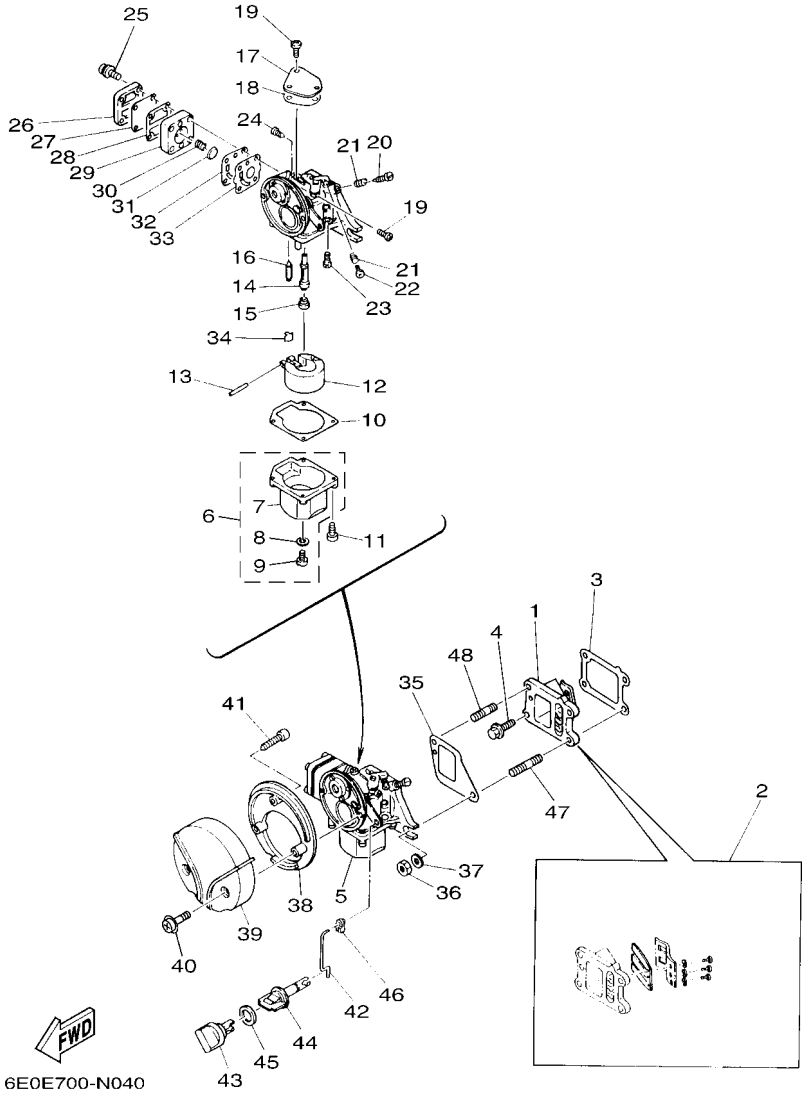

FIG. 4 INTAKE — ADMISSION

REF. NO.	PART NO. N° PIECES	DESCRIPTION DESCRIPTION	6GP5					REMARKS REMARQUES
1	6E0–13610–00	REED VALVE ASSY CLAPET COMPLET	1					
2	6E0–W0004–00	.REED SET .JEU DE CLAPETS	1					
3	6E0–13621–A2	GASKET, VALVE SEAT JOINT, SIEGE DE CLAPET	1					
4	95D95–06016	BOLT, FLANGE DEEP RECESS BOULON FIXATION	2					
5	6E3–14301–05	CARBURETOR ASSY 1 CARBURATEUR COMPLET 1	1					
6	6E0–14180–00	.FLOAT CHAMBER ASSY .CUVE DE FLOTTEUR	1					
7	6E0–14381–02	..BODY, FLOAT CHAMBER ..CORPS, CUVE DE FLOTTEUR	1					
8	646–14198–01	..GASKET ..JOINT	1					
9	97890–05006	..SCREW, PAN HEAD ..VIS, CRUCIFORME	1					
10	6E0–14384–00	.GASKET, FLOAT CHAMBER .JOINT, CUVE DE FLOTTEUR	1					
11	97980–04116	.SCREW, WITH WASHER .VIS, AVEC RONDELLE	4					
12	6E7–14385–01	.FLOAT .FLOTTEUR	1					
13	647–14386–00	.PIN, FLOAT .AXE, FLOTTEUR	1					
14	6E3–14341–02	.NOZZLE, MAIN .PUITS D'AIGUILLE	1					
15	648–14343–40	.JET, MAIN (# 80) .GICLEUR, PRINCIPAL (# 80)	1					
16	6F5–14392–00	.VALVE, NEEDLE .POINTEAU	1					
17	6E0–14157–00	.COVER, PLATE .COUVERCLE	1					
18	6E0–14227–00	.GASKET .JOINT	1					
19	97890–04007	.SCREW, PAN HEAD .VIS, CRUCIFORME	4					
20	647–14323–00	.SCREW, AIR ADJUSTING .VIS DE DOSEUR D'AIR	1					
21	646–14212–01	.SPRING, PILOT ADJUSTING .RESSORT, VIS DE RALENTI	2					
22	664–14321–01	.SCREW, THROTTLE .VIS, ACCELERATEUR	1					
23	648–14342–26	.JET, PILOT (# 52) .GICLEUR, RALENTI (# 52)	1					
24	647–14326–00	.SCREW, GUIDE .GUIDE DE VIS	1					
25	97980–04120	.SCREW, WITH WASHER .VIS, AVEC RONDELLE	4					
26	6E0–24413–00	.COVER .CAPUCHON	1					
27	6E0–24471–00	.DIAPHRAGM .DIAPHRAGME	1					

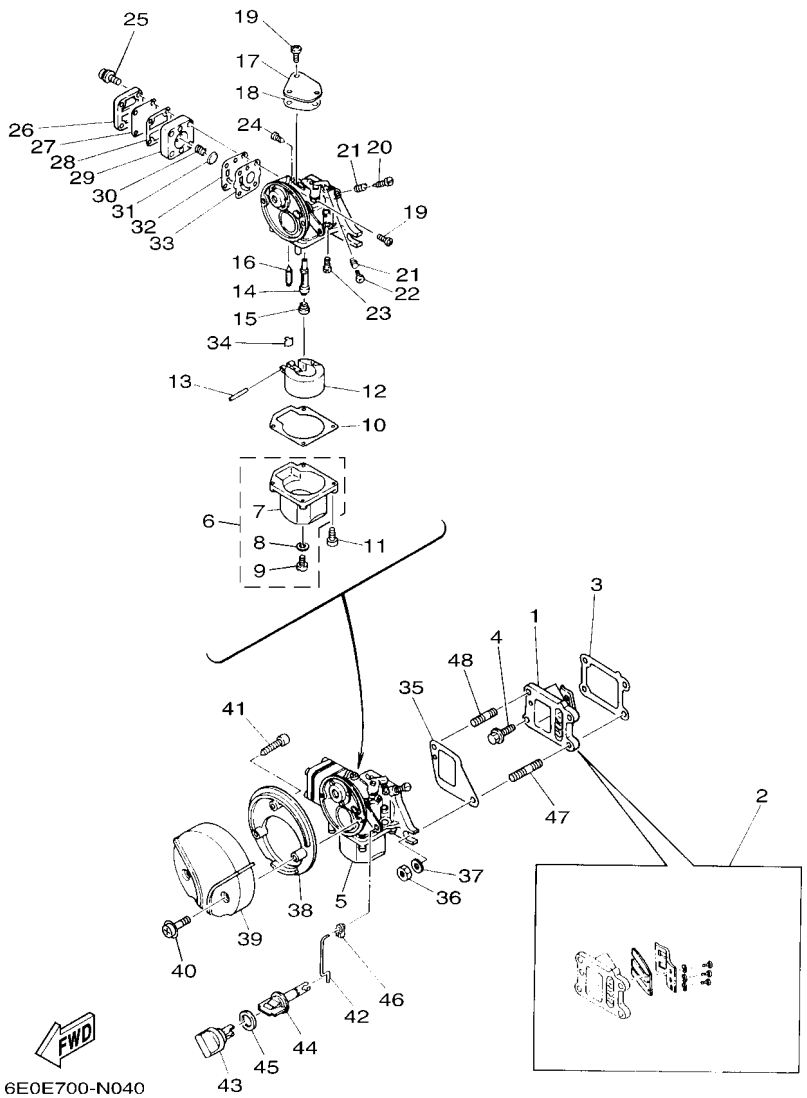

FIG. 4 INTAKE — ADMISSION

REF. NO.	PART NO. N° PIECES	DESCRIPTION DESCRIPTION	6GP5					REMARKS REMARQUES
28	6E0–24435–00	.GASKET, BODY 2 .JOINT, CORPS 2	1					
29	6E0–24412–00	.BODY 1 .CORPS 1	1					
30	6E0–24423–00	.SPRING, DIAPHRAGM .RESSORT, DIAPHRAGME	1					
31	6E0–14346–00	.PLATE .PLAQUE	1					
32	6E0–24411–00	.DIAPHRAGM .DIAPHRAGME	1					
33	6E0–24434–00	.GASKET, BODY .JOINT, CORPS	1					
34	6E0–14159–00	.CLIP .JONC	1					
35	6E0–14198–A0	GASKET JOINT	1					
36	95380–06700	NUT ECROU	2					
37	92995–06600	WASHER RONDELLE	2					
38	6E0–14417–00	COVER 1 COUVERCLE 1	1					
39	6E0–14418–00	COVER 2 COUVERCLE 2	1					
40	97980–05225	SCREW, WITH WASHER VIS, AVEC RONDELLE	2					
41	97780–40720	SCREW, TAPPING VIS, TETE BOMBEE	1					
42	6E0–41256–00	ROD, CHOKE 1 TRINGLE 1, STARTER	1					
43	6E0–41271–01	KNOB, CHOKE BOUTON DE STARTER	1					
44	6E0–41272–00	KNOB, CHOKE CONTRE ECROU	1					
45	90202–12M16	WASHER, PLATE RONDELLE, PLATE	1					
46	661–41262–02	JOINT, CHOKE LEVER RACCORD, LEVIER DE STARTER	1					
47	95627–06325	BOLT, STUD GOUJON	1					
48	90116–06M08	BOLT, STUD GOUJON	1					

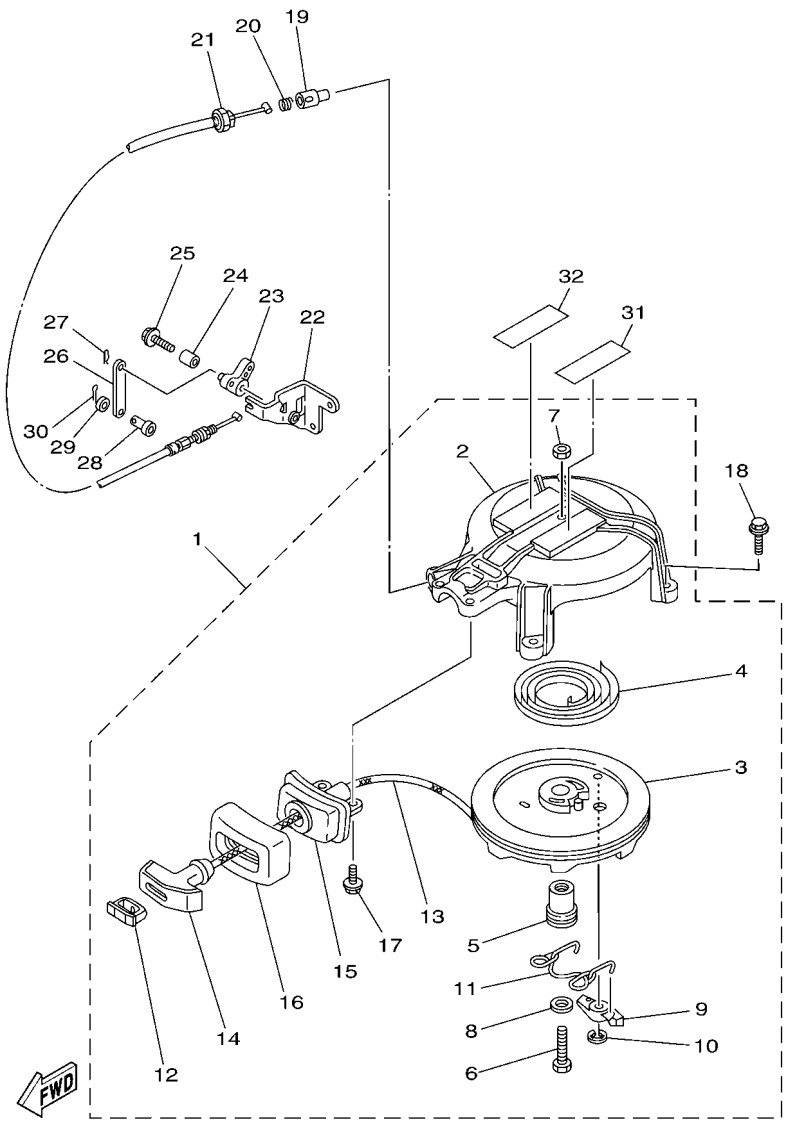

6E38300-H040

*1:CUT FROM 50M ROLLS,PART NO.90890-44372,CUTTING LENGTH 1.85M

*1:A PRELEVER SUR BOBINE 50M ,REFERENCE 90890-44372,
LONGUEUR DE COUPE 1.85M

FIG. 5 STARTER DEMARREUR

REF. NO.	PART NO. N° PIECES	DESCRIPTION DESCRIPTION	6GP5					REMARKS REMARQUES
1	6E4–15710–75–94	STARTER ASSY DEMARREUR COMPLET	1					
2	6E4–15711–72	.CASE, STARTER .CARTER DE DEMARREUR	1					
3	6E0–15714–01	.DRUM, SHEAVE .TAMBOUR, POULIE	1					
4	90510–08M03	.SPRING, SPIRAL .RESSORT, HELICOIDAL	1					
5	6E0–15717–00	.SHAFT, STARTER .AXE DE DEMARREUR	1					
6	97313–06035	.BOLT .BOULON	1					
7	95303–06600	.NUT .ECROU	1					
8	90201–06M30	.WASHER, PLATE .RONDELLE, PLATE	1					
9	677–15741–01	.PAWL, DRIVE .CLIQUET, ENTRAINEMENT	1					
10	93430–06M02	.CIRCLIP .CLIPS	1					
11	6E0–15705–00	.SPRING, DRIVE PAWL .RESSORT DE CLIQUET	1					
12	6G1–15779–00	.COVER .COUVERCLE	1					
13	*	.WIRE (L1850) .FIL (L1850)	1					*1 *1
14	6G1–15755–00	.HANDLE, STARTER .POIGNEE, DE DEMARREUR	1					
15	6E3–15758–01	.GUIDE, WIRE .GUIDE DE FIL	1					
16	6E0–15761–00	.SEAL, RUBBER 1 .JOINT CAOUTCHOUC 1	1					
17	95D95–06016	.BOLT, FLANGE DEEP RECESS .BOULON FIXATION	2					
18	95D95–06020	BOLT, FLANGE DEEP RECESS BOULON FIXATION	3					
19	656–15748–00	PLUNGER, STARTER STOP PLONGEUR, BOUTE DE DEMAR	1					
20	90501–10227	SPRING, COMPRESSION RESSORT, COMPRESSION	1					
21	6E4–15770–70	CABLE COMP., STARTER STOP CABLE, BUTEE DE DEMAR	1					
22	6E4–15772–71	STAY 2 SUPPORT 2	1					
23	6E4–15746–70	ARM BRAS	1					
24	90387–06504	COLLAR COLLERETTE	1					
25	90119–06287	BOLT, WITH WASHER BOULON, AVEC RONDELLE	1					
26	6E4–15747–70	LINK BIELLETTE	1					
27	90468–10005	CLIP JONC	1					

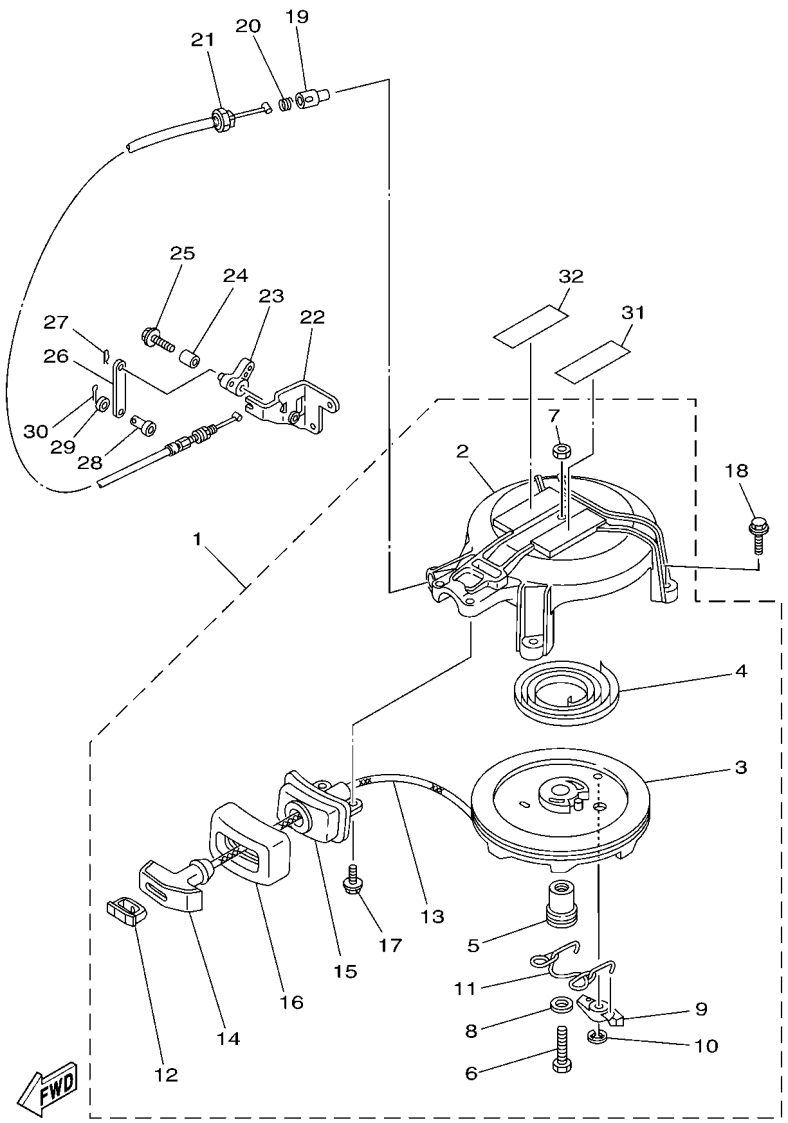

6E38300-H040

*1:CUT FROM 50M ROLLS,PART NO.90890-44372,CUTTING LENGTH 1.85M

*1:A PRELEVER SUR BOBINE 50M ,REFERENCE 90890-44372,
LONGUEUR DE COUPE 1.85M

FIG. 5 STARTER DEMARREUR

REF. NO.	PART NO. N° PIECES	DESCRIPTION DESCRIPTION	6GP5					REMARKS REMARQUES
28	91790–05010	PIN, CLEVIS AXE D"ARTICULATION	1					
29	90202–05088	WASHER, PLATE RONDELLE, PLATE	1					
30	91490–16010	PIN. COTTER GOUPILLE	1					
31	6EE–81995–40	LABEL, WARNING ETIQUETTE, AVERTISSEMENT	1					
32	6EE–81995–50	LABEL, WARNING ETIQUETTE, AVERTISSEMENT	1					

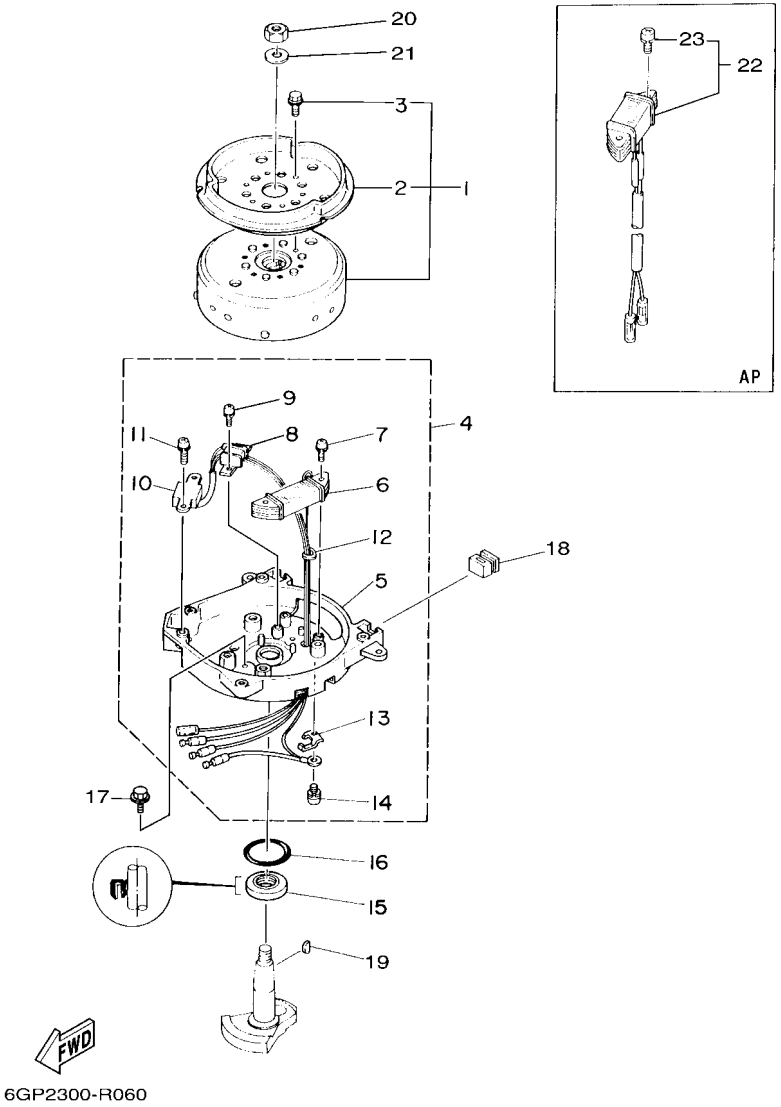

FIG. 6 GENERATOR — GENERATRICE

REF. NO.	PART NO. N° PIECES	DESCRIPTION DESCRIPTION	6GP5					REMARKS REMARQUES
1	6E0–85550–72	ROTOR ASSY ROTOR CPLT	1					
2	6E0–15723–00	.PULLEY, STARTER .POULIE DE DEMARREUR	1					
3	90105–06M14	.BOLT FLANGE .BOULON, A COLLERETTE	3					
4	6E0–85560–71	BASE ASSY ENS. FLASQUE	1					
5	6E0–15359–01	.HOUSING, OIL SEAL .LOGEMENT, BAGUE D'ETANCHEITE	1					
6	6E0–85520–70	.COIL, CHARGE .BOBINE, CHARGE	1					
7	90159–05038	.SCREW, WITH WASHER .VIS, AVEC RONDELLE	2					
8	6E0–85595–70	.COIL, PULSER .BOBINE, PULSEUR	1					
9	90159–04036	.SCREW, WITH WASHER .VIS, AVEC RONDELLE	2					
10	6E0–85592–70	.PULSER COIL ASSY .PULSATION BOBINE (ENS.)	1					
11	90159–05037	.SCREW, WITH WASHER .VIS, AVEC RONDELLE	2					
12	6E0–81336–70	.GROMMET .OEILLET CAOUTCHOUC	1					
13	6E0–81328–70	.CLAMP .COLLIER	1					
14	90159–04035	.SCREW, WITH WASHER .VIS, AVEC RONDELLE	1					
15	93102–20M25	OIL SEAL JOINT SPY	1					
16	93210–42159	O-RING JOINT TORIQUE	1					
17	97E95–06516	BOLT, HEXAGON W/W DEEP RECESS VIS HEXAGONAL AVC RONDELLE	2					
18	6E0–24183–00	DAMPER, LOCATING 3 SILENT-BLOC	2					
19	90280–04M06	KEY, WOODRUFF CLAVETTE, DEMI-LUNE	1					
20	90170–10113	NUT ECROU	1					
21	90201–10126	WASHER, PLATE RONDELLE, PLATE	1					
22	6E0–81303–40	LIGHTING COIL ASSY BOBINE D'ECLAIRAGE	1					AP 40W AP 40W
	6E0–81303–80	LIGHTING COIL ASSY BOBINE D'ECLAIRAGE	1					AP 60W AP 60W
23	90159–05039	.SCREW, WITH WASHER .VIS, AVEC RONDELLE	2					FOR 6E0-81303-40 FOR 6E0-81303-40
	90159–05040	.SCREW, WITH WASHER .VIS, AVEC RONDELLE	2					FOR 6E0-81303-80 FOR 6E0-81303-80

FIG. 7 ELECTRICAL ELECTRIQUE

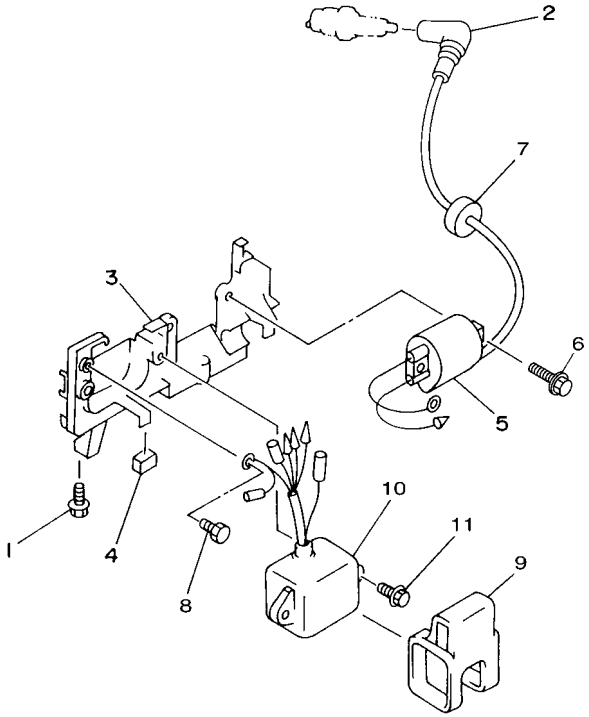

6GP2300-R070

REF. NO.	PART NO. N° PIECES	DESCRIPTION DESCRIPTION	6GP5					REMARKS REMARQUES
1	95D95–06016	BOLT, FLANGE DEEP RECESS BOULON FIXATION	2					
2	6E3–82370–21	PLUG CAP ASSY ANTIPARASITE	1					
3	6E0–82316–01	BRACKET, IGNITION COIL SUPPORT, BOBINE D'ALLUMAGE	1					
4	6E0–82317–00	DAMPER, IGNITION COIL AMORTISSEUR, BOBINE D'ALLUM	2					
5	6E0–85570–02	IGNITION COIL ASSY BOBINE D'ALLUMAGE (ENS.)	1					
6	97E95–06516	BOLT, HEXAGON W/W DEEP RECESS VIS HEXAGONAL AVC RONDELLE	2					
7	90480–25161	GROMMET PASSE-FIL	1					
8	97080–06010	BOLT BOULON	1					
9	6E0–85548–00	HOLDER SUPPORT	1					
10	6E0–85540–72	C.D.I. UNIT ASSY BLOC C.D.I.	1					
11	95D95–06020	BOLT, FLANGE DEEP RECESS BOULON FIXATION	2					

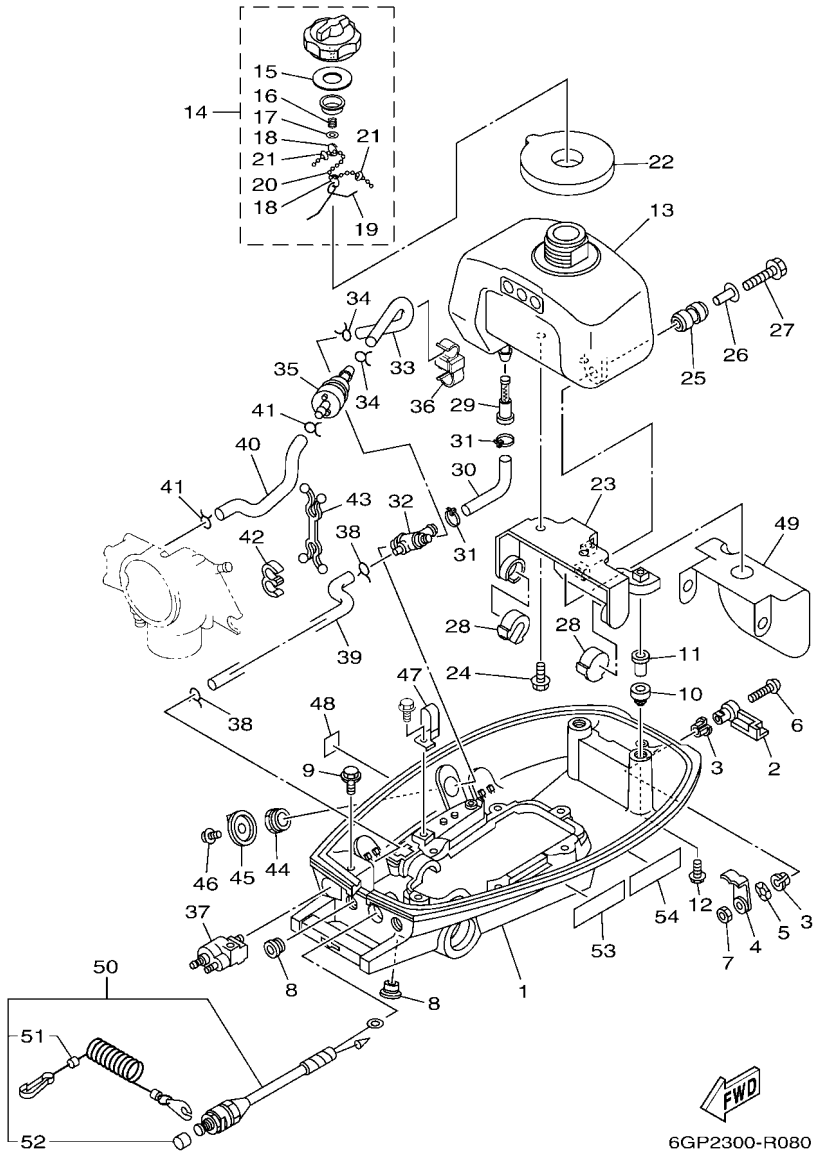

FIG. 8 BOTTOM COWLING — CAPOT INFERIEUR

REF. NO.	PART NO. N° PIECES	DESCRIPTION DESCRIPTION	6GP5					REMARKS REMARQUES
1	6E0–42711–10–8D	COWLING, BOTTOM 1 CUVETTE 1	1					
2	6E0–42815–00–8D	LEVER, CLAMP 1 LEVIER, PRESSE 1	1					
3	90386–12069	BUSH DOUILLE	2					
4	6E0–42816–00	LEVER, CLAMP 2 LEVIER, PRESSE 2	1					
5	90206–12052	WASHER, WAVE RONDELLE, ONDULEE	1					
6	97885–06030	SCREW, PAN HEAD VIS, A ENCOCHE	1					
7	95380–06700	NUT ECROU	1					
8	90480–14M14	GROMMET PASSE-FIL	2					
9	95D95–06020	BOLT, FLANGE DEEP RECESS BOULON FIXATION	1					
10	6E3–24182–00	DAMPER, LOCATING 2 SILENT-BLOC	2					
11	6E0–42542–00	PIPE TUYAU	2					
12	95D95–06025	BOLT, FLANGE DEEP RECESS BOULON FIXATION	2					
13	6E3–24111–00	TANK, FUEL RESERVOIR, A ESSENCE	1					
14	68D–24610–10	CAP ASSY BOUCHON	1					
15	68D–24612–00	.PACKING, CAP .JOINT, BOUCHON	1					
16	90501–100A5	.SPRING, COMPRESSION .RESSORT, COMPRESSION	1					
17	92990–04200	.WASHER, PLAIN .RONDELLE, PLATE	1					
18	90468–100A0	.CLIP .JONC	2					
19	624–24634–00	.HOOK, CHAIN BALL .ATTACHE	1					
20	69M–24633–01	.CHAIN, BALL .CHANE DE BALLE	1					
21	67D–21757–00	.WASHER, SPECIAL 1 .RONDELLE, SPECIALE 1	2					
22	6E3–24641–10	GASKET, CAP 1 JOINT 1, BOUCHON	1					
23	6E3–24115–00	STAY, FUEL TANK 1 SUPPORT 1, RESERV A ESSENCE	1					
24	97E95–06514	BOLT, HEXAGON W/W DEEP RECESS VIS HEXAGONAL AVC RONDELLE	2					
25	6A0–82317–00	DAMPER, IGNITION COIL AMORTISSEUR, BOBINE D'ALLUM	1					
26	90387–06119	COLLAR COLLERETTE	1					
27	97E95–06525	BOLT, HEXAGON W/W DEEP RECESS VIS HEXAGONAL AVC RONDELLE	1					

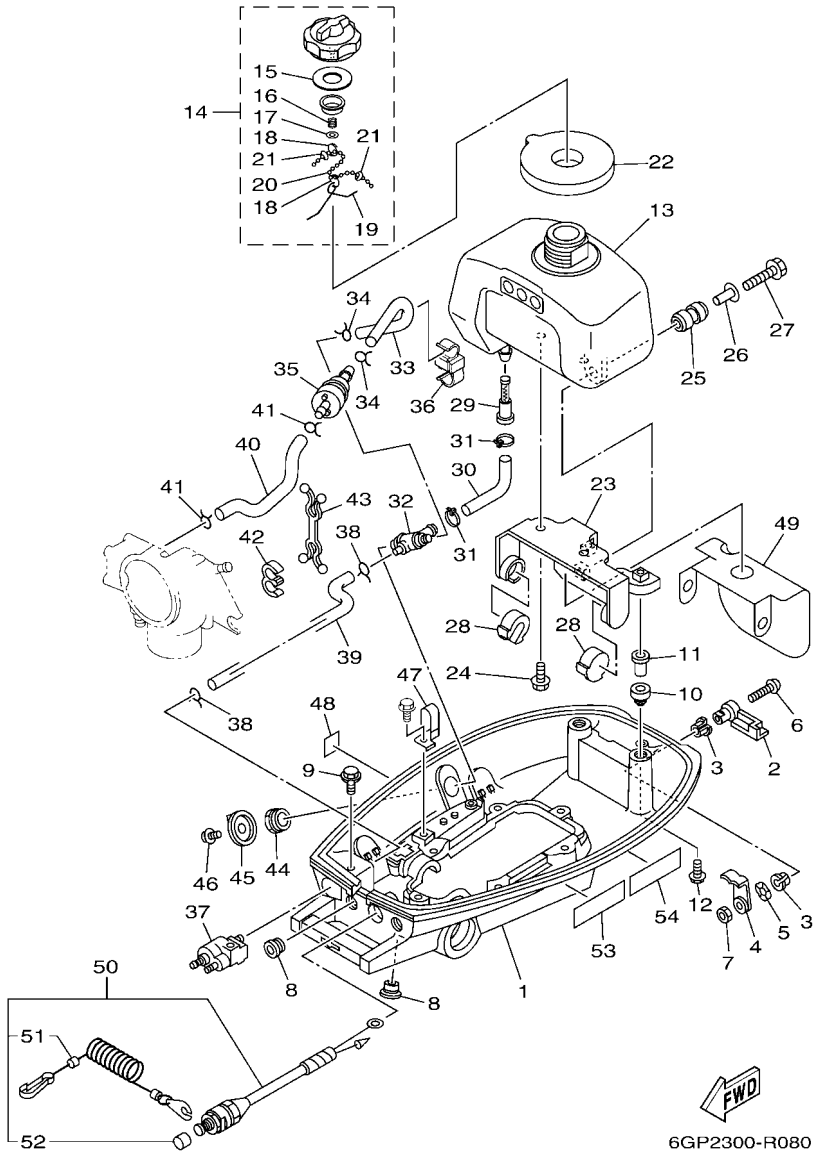

FIG. 8 BOTTOM COWLING — CAPOT INFERIEUR

REF. NO.	PART NO. N° PIECES	DESCRIPTION DESCRIPTION	6GP5					REMARKS REMARQUES
28	6E0–24181–00	DAMPER, LOCATING 1 SILENT-BLOC 1	2					
29	6L5–24251–00	STRAINER 1 FILTRE 1	1					
30	6E3–24311–00	PIPE, FUEL 1 DURITE A ESSENCE	1					
31	90465–13M11	CLAMP BRIDE	2					
32	6E0–24500–10	FUEL COCK ASSY 1 ROBINET A ESSENCE COMPLETE 1	1					
33	6E3–24314–00	PIPE 4 DURITE 4	1					
34	90467–08004	CLIP JONC	2					
35	68T–24251–01	STRAINER 1 FILTRE 1	1					
36	90464–12010	CLAMP BRIDE	1					
37	6G1–24304–10	FUEL PIPE JOINT COMP. 1 DURITE RACCORDEMT. A ESSENCE	1					
38	90467–08004	CLIP JONC	2					
39	6E3–24313–00	PIPE 3 DURITE 3	1					
40	6E3–24315–00	PIPE 5 DURITE 5	1					
41	90467–08004	CLIP JONC	2					
42	90464–09M21	CLAMP BRIDE	1					
43	90464–10M53	CLAMP BRIDE	1					
44	90170–16M35	NUT ECROU	1					
45	6J1–24524–00	LEVER, COCK LEVIER, ROBINET	1					
46	97980–04210	SCREW, WITH WASHER VIS, AVEC RONDELLE	1					
47	90465–08M62	CLAMP BRIDE	1					
48	6E0–24591–10	EMBLEM, FUEL COCK ADHESIF	1					
49	6E3–24217–00	COVER COUVERCLE	1					
50	6E0–82575–00	ENGINE STOP SWITCH ASSY COUPE CIRCUIT CPLT	1					
51	682–82556–00	.LANYARD, STOP SWITCH .CORDON DU COUPE CIRCUIT	1					
52	689–8257Y–00	.CAP .COUVERCLE	1					
53	6EE–81994–40	LABEL, SAFETY ETIQUETTE, SECURITE	1					
54	6EE–81994–50	LABEL, SAFETY ETIQUETTE, SECURITE	1					

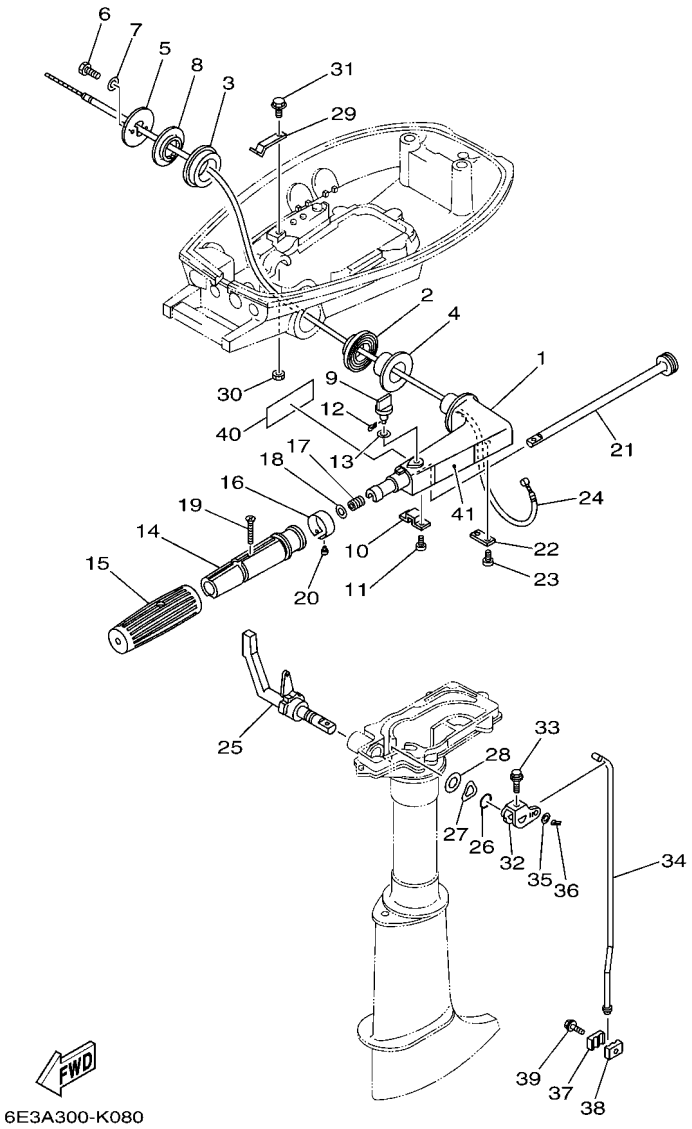

FIG. 9 CONTROL — COMMANDE

REF. NO.	PART NO. N° PIECES	DESCRIPTION DESCRIPTION	6GP5					REMARKS REMARQUES
1	6E0–42111–02–4D	HANDLE, STEERING POIGNEE	1					
2	6E0–42129–02	BUSHING, RUBBER DOUILLE, CAOUTCHOUC	1					
3	6E4–42129–00	BUSHING, RUBBER DOUILLE, CAOUTCHOUC	1					
4	90386–26M30	BUSH DOUILLE	1					
5	6E0–42131–02–94	COVER, HANDLE STEERING COUVERCLE	1					
6	97013–05020	BOLT BOULON	2					
7	92903–05600	WASHER, PLATE RONDELLE, PLATE	2					
8	90386–26M33	BUSH DOUILLE	1					
9	6E0–42125–00	BOLT, FRICTION ADJUSTING BOULON	1					
10	6E0–42134–02	COVER, THROTTLE LEVER CAPOT, CREMAILLERE	1					
11	97885–05012	SCREW, PAN HEAD VIS, A ENCOCHE	2					
12	91490–12010	PIN. COTTER GOUPILLE	1					
13	90202–07M22	WASHER, PLATE RONDELLE, PLATE	1					
14	6E0–42119–00	GRIP, STEERING HANDLE POIGNEE, BARRE FRANCHE	1					
15	6E0–42177–01	RUBBER, HANDLE CAOUTCHOUC, POIGNEE	1					
16	6E0–42137–10	INDICATOR, THROTTLE INDICATEUR, ACCELERATION	1					
17	90501–23215	SPRING, COMPRESSION RESSORT, COMPRESSION	1					
18	90201–10119	WASHER, PLATE RONDELLE, PLATE	1					
19	90152–05011	SCREW, COUNTERSUNK VIS, TETE NOYEE	1					
20	90269–02M09	RIVET RIVET	1					
21	6E0–42138–01	LEVER, THROTTLE LEVIER, ACCELERATEUR	1					
22	6E0–42159–02	STAY SUPPORT	1					
23	97885–05012	SCREW, PAN HEAD VIS, A ENCOCHE	2					
24	6E0–26301–01	THROTTLE CABLE ASSY CABLE D'ACCELERATEUR	1					
25	6GP–44111–00–8D	HANDLE, GEAR SHIFT POIGNEE, LEVIER D'EMBRAYAGE	1					
26	93210–12327	O-RING JOINT TORIQUE	1					
27	90206–16M06	WASHER, WAVE RONDELLE, ONDULEE	1					

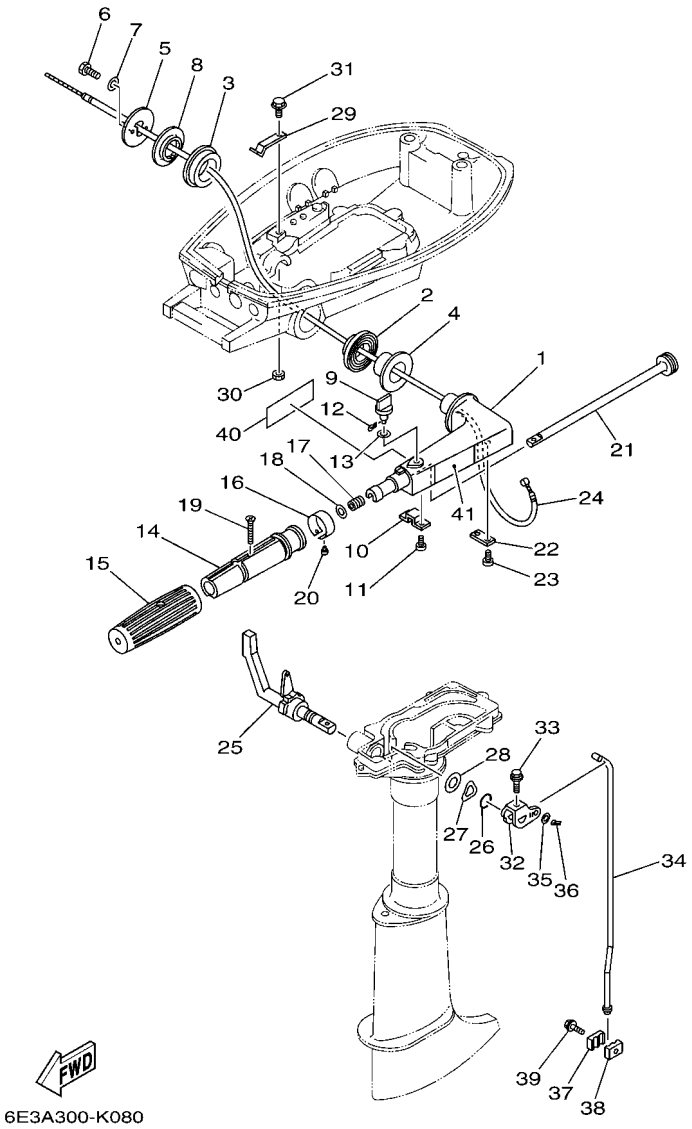

FIG. 9 CONTROL COMMANDE

REF. NO.	PART NO. N° PIECES	DESCRIPTION DESCRIPTION	6GP5					REMARKS REMARQUES
28	90202–16061	WASHER, PLATE RONDELLE, PLATE	1					
29	6E0–44116–00	SPRING RESSORT	1					
30	95380–06700	NUT ECROU	1					
31	95D95–06012	BOLT, FLANGE DEEP RECESS BOULON FIXATION	1					
32	6E0–44121–00	LEVER, SHIFT ROD LEVIER, TIGE D'INVERSION	1					
33	95D95–06025	BOLT, FLANGE DEEP RECESS BOULON FIXATION	1					
34	6E0–44143–00	ROD, SHIFT 1 TIGE D'EMBRAYAGE 1	1					S(17.5") S(17.5")
	6E0–44143–10	ROD, SHIFT 1 TIGE D'EMBRAYAGE 1	1					L(22.5") L(22.5")
35	92990–05600	WASHER, PLATE RONDELLE, PLATE	1					
36	91490–16010	PIN. COTTER GOUPILLE	1					
37	6E0–44145–00	CONNECTOR, SHIFT ROD 1 CONNECTEUR, TIGE D'INVERSION 1	1					
38	6E0–44146–00	CONNECTOR, SHIFT ROD 2 CONNECTEUR, TIGE D'INVERSION 2	1					
39	95D95–06020	BOLT, FLANGE DEEP RECESS BOULON FIXATION	1					
40	6EE–42794–40	LABEL, WARNING (GENERAL) ETIQUETTE, AVERTISSEMENT	1					
41	6EE–42794–50	LABEL, WARNING (GENERAL) ETIQUETTE, AVERTISSEMENT	1					

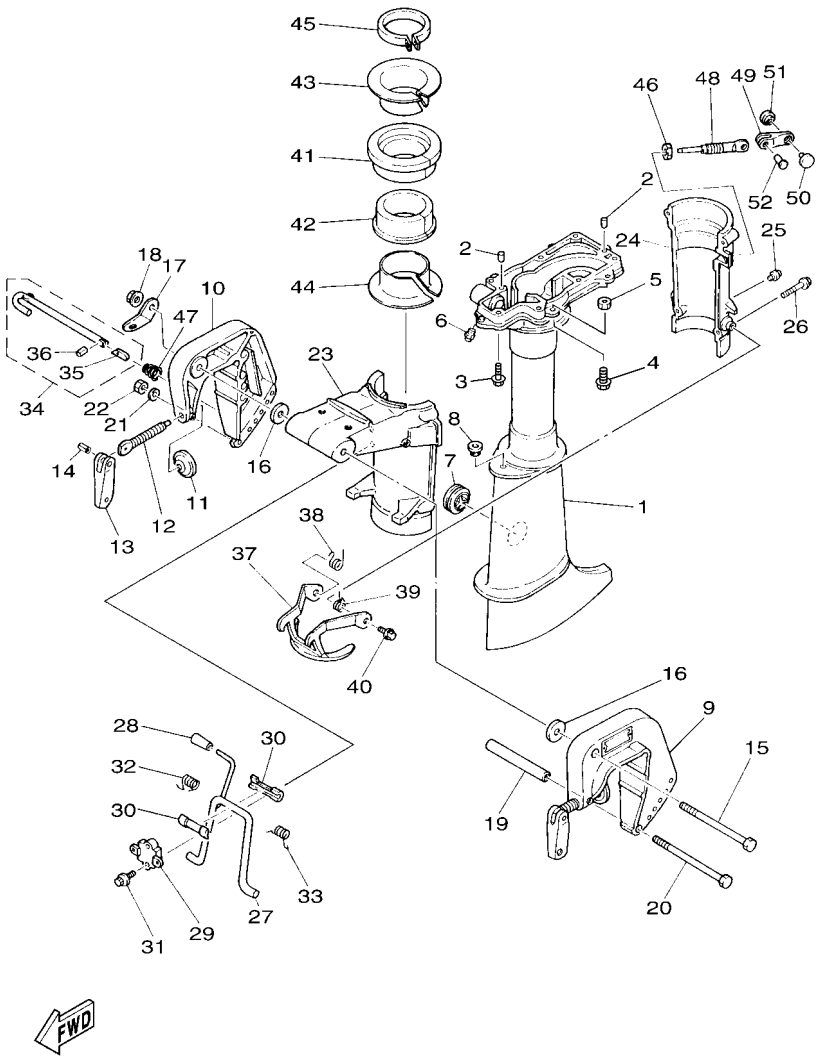

6GP2300-R100

FIG. 10 UPPER CASING & BRACKET — FOURREAU & SUPPORT

REF. NO.	PART NO. N° PIECES	DESCRIPTION DESCRIPTION	6GP5					REMARKS REMARQUES
1	6E0–45111–02–8D	CASING, UPPER FOURREAU	1					S(17.5") S(17.5")
	6E0–45111–12–8D	CASING, UPPER FOURREAU	1					L(22.5") L(22.5")
2	93606–12019	PIN, DOWEL GOUPILLE	2					
3	97E95–06530	BOLT, HEXAGON W/W DEEP RECESS VIS HEXAGONAL AVC RONDELLE	7					
4	97E95–06516	BOLT, HEXAGON W/W DEEP RECESS VIS HEXAGONAL AVC RONDELLE	4					
5	95380–06700	NUT ECROU	4					
6	93700–06M03	NIPPLE, GREASE PION	1					
7	647–45151–01	COVER, UPPER CASING CAPUCHON, FOURREAU	1					
8	90480–10M13	GROMMET PASSE-FIL	1					
9	6E0–43111–02–8D	BRACKET, CLAMP 1 PRESSE 1	1					
10	6E0–43112–01–8D	BRACKET, CLAMP 2 PRESSE 2	1					
11	620–43114–00	PAD, TRANSOM CLAMP RONDELLE D'APPUI	2					
12	6E0–43116–01	SCREW, TRANSOM CLAMP VIS DE PRESSE	2					
13	6E0–43118–01	HANDLE, TRANSOM CLAMP POIGNEE DE VIS DE PRESSE	2					
14	90243–04M01	PIN GOUPILLE	2					
15	90101–08M07	BOLT BOULON	1					
16	90201–08M03	WASHER, PLATE RONDELLE, PLATE	2					
17	6A1–43113–01	PLATE, CLAMP BRACKET PLAQUETTE, PRESSE	1					
18	90185–08057	NUT, SELF-LOCKING ECROU,AUTO-BLOQUANT	1					
19	90387–06M11	COLLAR COLLERETTE	1					
20	90101–06335	BOLT BOULON	1					
21	92990–06600	WASHER, PLATE RONDELLE, PLATE	1					
22	95380–06600	NUT, HEXAGON ECROU	1					
23	6E0–43311–05–8D	BRACKET, SWIVEL 1 SUPPORT, PIVOT 1	1					
24	6E0–43312–02–8D	BRACKET, SWIVEL 2 SUPPORT, PIVOT 2	1					
25	93700–06M03	NIPPLE, GREASE PION	1					
26	95D95–06035	BOLT, FLANGE DEEP RECESS BOULON FIXATION	4					

FIG. 10 UPPER CASING & BRACKET — FOURREAU & SUPPORT

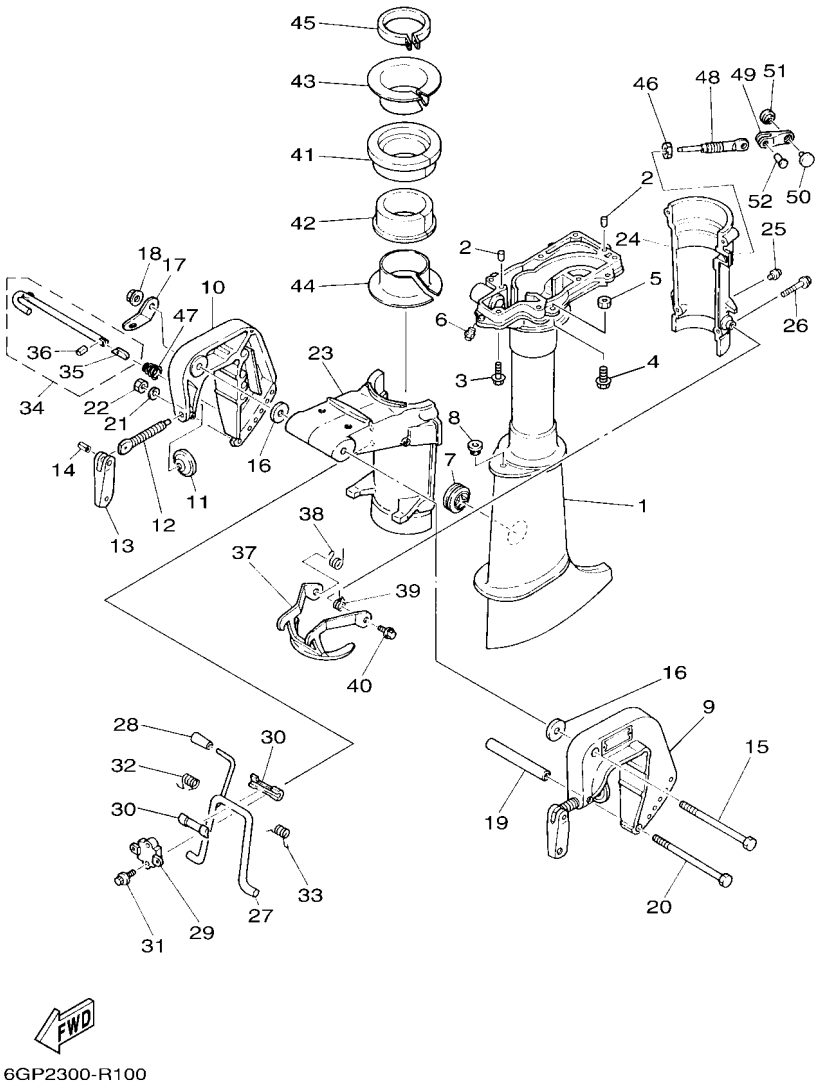

REF. NO.	PART NO. N° PIECES	DESCRIPTION DESCRIPTION	6GP5					REMARKS REMARQUES
27	6E0–43181–00	LEVER, TILT STOP 1 LEVIER VERROUILLAGE RELEVAGE 1	1					
28	6E0–43632–00	KNOB, TILT POIGNEE, LEVIER DE RELEVAGE	1					
29	6E0–43313–00–94	BRACKET, SWIVEL 3 SUPPORT, PIVOT 3	1					
30	620–43189–00	BUSHING COUSSINET	2					
31	95D95–06020	BOLT, FLANGE DEEP RECESS BOULON FIXATION	2					
32	90508–16020	SPRING, TORSION RESSORT, TORSION	1					
33	90508–16021	SPRING, TORSION RESSORT, TORSION	1					
34	6E0–43160–01	TILT ROD ASSY BROCHE D'INCLINAISON (ENS.)	1					
35	689–43165–00	.PLATE, TILT LOCK .TAQUET, BROCHE INCLINAISON	1					
36	91690–30008	.PIN, SPRING .AGRAFFE	1					
37	6E0–43614–00–CA	PLATE, TILT LOCK ETRIER, VERROUILLAGE MARCHE AR	1					
38	90508–14M10	SPRING, TORSION RESSORT, TORSION	1					
39	90508–14M11	SPRING, TORSION RESSORT, TORSION	1					
40	95D95–06010	BOLT, FLANGE DEEP RECESS BOULON FIXATION	2					
41	6E0–42537–02	BUSHING, PIVOT SHAFT COUSSINET	1					
42	6E0–42538–02	BUSHING, PIVOT SHAFT COUSSINET	1					
43	6E0–42539–00	BUSHING, PIVOT SHAFT COUSSINET	1					
44	6E0–42549–00	BUSHING, PIVOT SHAFT COUSSINET	1					
45	6E0–42528–03	PLATE, FRICTION PLAQUE, FRICTION	1					
46	95380–08600	NUT ECROU	1					
47	90502–08M05	SPRING, CONICAL RESSORT, CONIQUE	1					
48	6L5–42529–01	SCREW, FRICTION PIECE VIS, PIECE DE FRICTION	1					
49	6L5–42561–00	KNOB, STEERING LOCK BOUTON	1					
50	6L5–44196–00	INDICATOR 3 INDICATEUR 3	1					
51	6L5–44197–00	INDICATOR 4 INDICATEUR 4	1					
52	90266–04M05	RIVET RIVET	1					

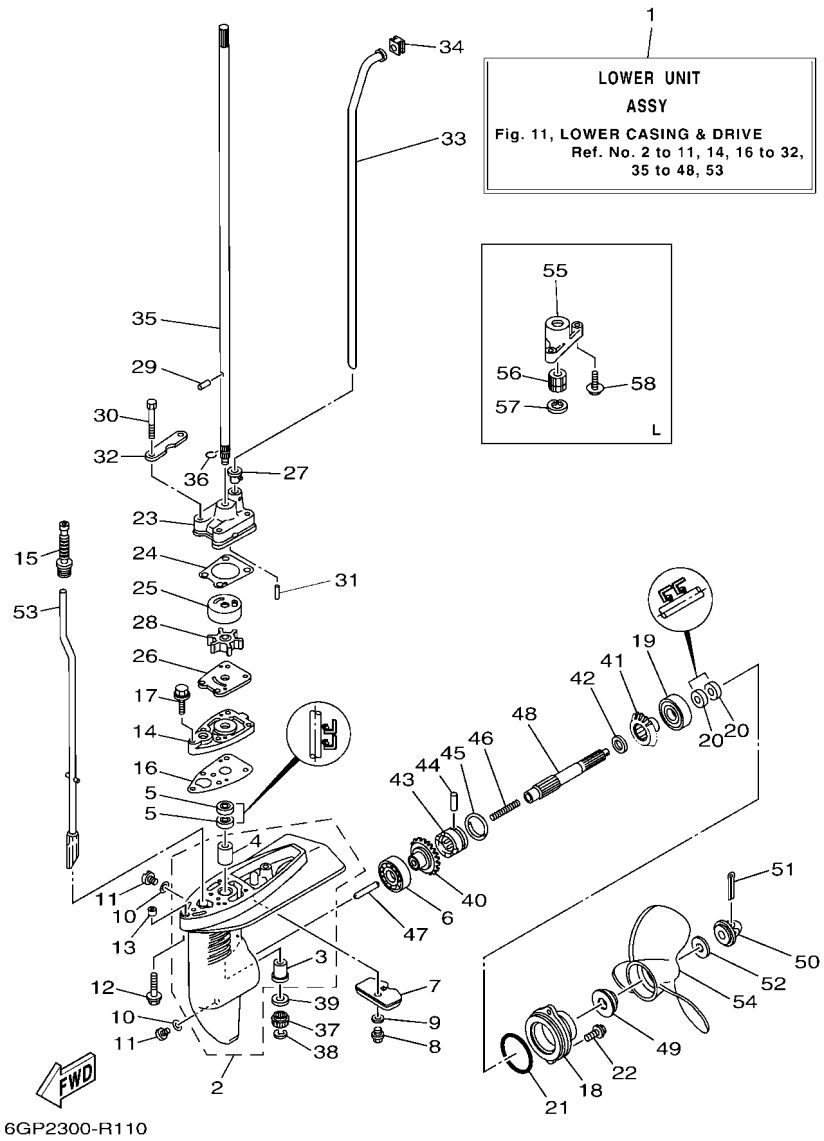

FIG. 11 LOWER CASING & DRIVE — BOITIER D HELICE TRANSMISSION

REF. NO.	PART NO. N° PIECES	DESCRIPTION DESCRIPTION	6GP5					REMARKS REMARQUES
1	6E0–45300–04–8D	LOWER UNIT ASSY UNITE INFERIEURE (ENS.)	1					S(17.5") S(17.5")
	6E0–45300–14–8D	LOWER UNIT ASSY UNITE INFERIEURE (ENS.)	1					L(22.5") L(22.5")
2	6E0–45311–02–8D	CASING, LOWER BOITIER D'HELICE	1					
3	6E0–45317–09	.BUSHING, DRIVE SHAFT .DOUILLE, ARBRE MOTEUR	1					
4	6E0–45316–09	.BUSHING, DRIVE SHAFT .DOUILLE, ARBRE MOTEUR	1					
5	93101–10M14	OIL SEAL JOINT SPY	2					
6	93306–004U0	BEARING ROULEMENT	1					
7	6L5–45251–03	ANODE ANODE	1					
8	95D95–06012	BOLT, FLANGE DEEP RECESS BOULON FIXATION	1					
9	92990–06300	WASHER, INTERNAL TOOTH RONDELLE, DENTURE INTERNE	1					
10	90430–08003	GASKET JOINT	3					
11	90340–08002	PLUG, STRAIGHT SCREW PLOT, FILETE DROIT	3					
12	90119–06302	BOLT, WITH WASHER BOULON, AVEC RONDELLE	2					
13	90387–06M14	COLLAR COLLERETTE	2					
14	6E0–45321–01–CA	PLATE PLAQUETTE	1					
15	6G1–44147–00	BOOT, SHIFT ROD SOUFFLET, TIGE D'INVERSION	1					
16	6E0–45315–A0	PACKING, LOWER CASING JOINT, BOITIER D'HELICE	1					
17	97E95–06525	BOLT, HEXAGON W/W DEEP RECESS VIS HEXAGONAL AVC RONDELLE	1					
18	6E0–45361–01–8D	CAP, LOWER CASING COUVERCLE, BOITIER D'HELICE	1					
19	93306–004U0	BEARING ROULEMENT	1					
20	93101–13M12	OIL SEAL JOINT SPY	2					
21	93210–48214	O-RING JOINT TORIQUE	1					
22	95D95–06016	BOLT, FLANGE DEEP RECESS BOULON FIXATION	2					
23	6E0–44311–00	HOUSING, WATER PUMP CORPS, POMPE A EAU	1					
24	6E0–44315–A0	GASKET, WATER PUMP JOINT, POMPE A EAU	1					
25	6E0–44322–02	INSERT, CARTRIDGE CUVETTE	1					
26	6E0–44323–00	OUTER PLATE, CARTRIDGE PLAQUE EXTERIEURE	1					

FIG. 11 LOWER CASING & DRIVE — BOITIER D HELICE TRANSMISSION

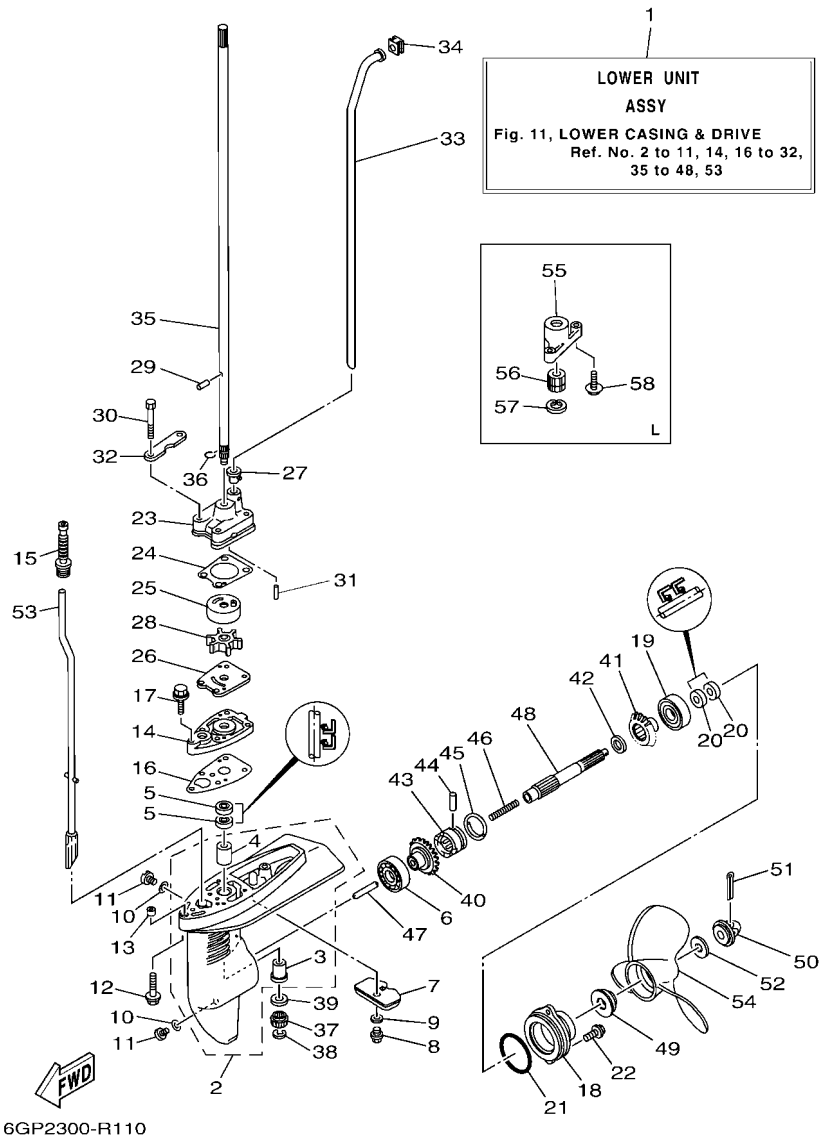

REF. NO.	PART NO. N° PIECES	DESCRIPTION DESCRIPTION	6GP5					REMARKS REMARQUES
27	6E0–44366–00	DAMPER, WATER SEAL 2 JOINT, TUBE D'EAU 2	1					
28	6E0–44352–00	IMPELLER TURBINE	1					
29	93604–09066	PIN, DOWEL CLAVETTE	1					
30	97D95–06045	BOLT, HEXAGON DEEP RECESS VIS HEXAGONAL	4					
31	93604–18080	PIN, DOWEL CLAVETTE	2					
32	6E0–44328–00	PLATE PLAQUETTE	2					
33	6E0–44361–00	TUBE, WATER 1 TUBE D'EAU 1	1					S(17.5") S(17.5")
	6E0–44361–10	TUBE, WATER 1 TUBE D'EAU 1	1					L(22.5") L(22.5")
34	646–44365–00	DAMPER, WATER SEAL 1 JOINT, TUBE D'EAU 1	1					
35	6E0–45511–01	SHAFT, DRIVE ARBRE, MOTEUR	1					S(17.5") S(17.5")
	6E0–45511–11	SHAFT, DRIVE ARBRE, MOTEUR	1					L(22.5") L(22.5")
36	90467–08M01	CLIP JONC	1					
37	6E0–45551–00	PINION (13T) PIGNON D'ATTAQUE (13D)	1					
38	99001–06600	CIRCLIP CIRCLIP	1					
39	90201–11M49	WASHER, PLATE RONDELLE, PLATE	1					
40	6E0–45560–00	GEAR 1 (27T) PIGNON 1 (27T)	1					
41	6E0–45570–00	GEAR 2 (27T) PIGNON 2 (27T)	1					
42	90201–13M50	WASHER, PLATE RONDELLE, PLATE	1					
43	6E0–45631–00	CLUTCH, DOG CRABOT	1					
44	90250–05046	PIN, STRAIGHT GOUPILLE, DROITE	1					
45	654–45633–00	RING, CROSS PIN JONC, GOUPILLE CRABOT	1					
46	90501–10064	SPRING, COMPRESSION RESSORT, COMPRESSION	1					
47	654–45635–00	PLUNGER, SHIFT POUSSOIR D'EMBRAYAGE	1					
48	6E0–45611–01	SHAFT, PROPELLER ARBRE, HELICE	1					
49	6L5–45987–01	SPACER 1 ENTRETOISE 1	1					
50	6L5–45616–00	NUT, PROPELLER CONE, HELICE	1					
51	91490–25030	PIN. COTTER GOUPILLE	1					

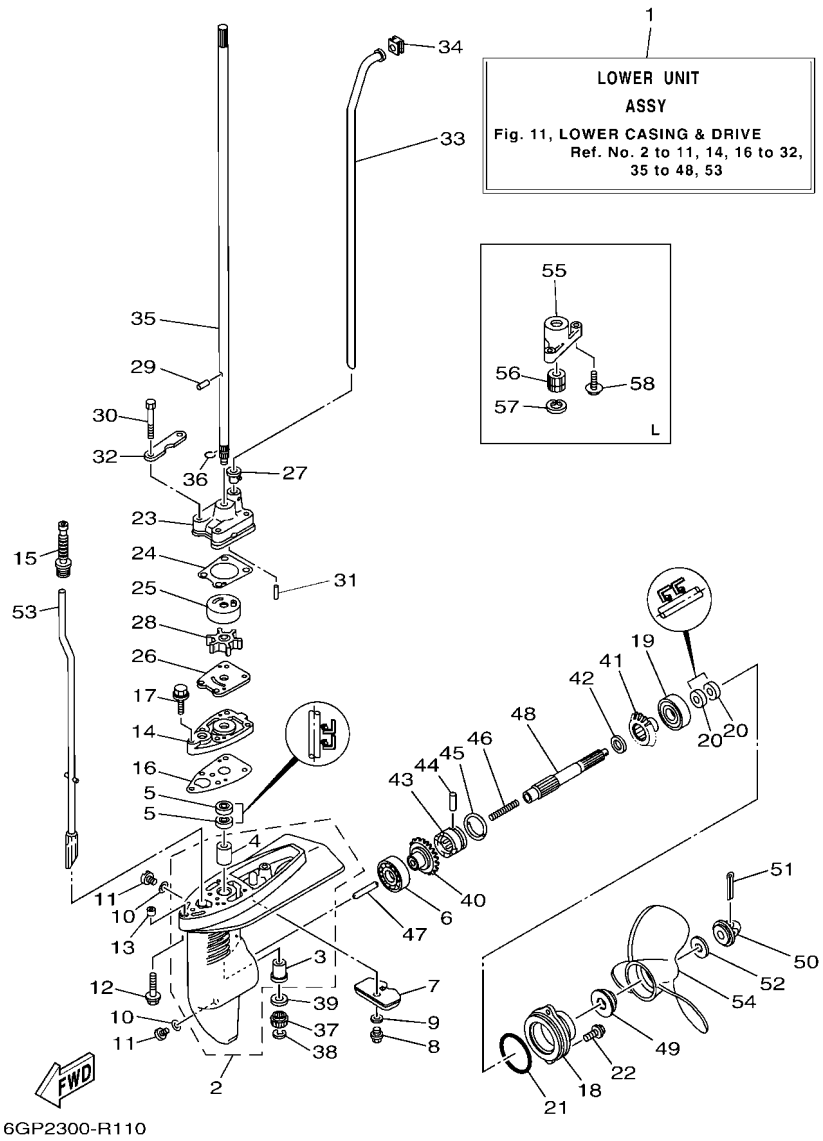

FIG. 11 LOWER CASING & DRIVE — BOITIER D HELICE TRANSMISSION

REF. NO.	PART NO. N° PIECES	DESCRIPTION DESCRIPTION	6GP5					REMARKS REMARQUES
52	90201–08M54	WASHER, PLATE RONDELLE, PLATE	1					
53	6E0–44150–00	SHIFT CAM ASSY CAME D'INVERSION	1					S(17.5") S(17.5")
	6E0–44150–10	SHIFT CAM ASSY CAME D'INVERSION	1					L(22.5") L(22.5")
54	6E0–45949–00	PROPELLER (3X7-1/4"X6-1/2"-BA) HELICE (3X7-1/4"X6-1/2"-BA)	1					UR UR
	6E0–45943–01	PROPELLER (3X7-1/2"X7"-BA) HELICE (3X7-1/2"X7"-BA)	1					UR UR
	6E0–45941–01	PROPELLER (3X7-1/2"X8"-BA) HELICE (3X7-1/2"X8"-BA)	1					UR UR
55	6E0–45331–00–CA	HOUSING, BEARING FLASQUE, ROULEMENT	1					L(22.5") L(22.5")
56	6E0–45318–01	BUSHING, DRIVE SHAFT DOUILLE, ARBRE MOTEUR	1					L(22.5") L(22.5")
57	93420–22M03	CIRCLIP CIRCLIP, TYPE S	1					L(22.5") L(22.5")
58	97980–05225	SCREW, WITH WASHER VIS, AVEC RONDELLE	2					L(22.5") L(22.5")

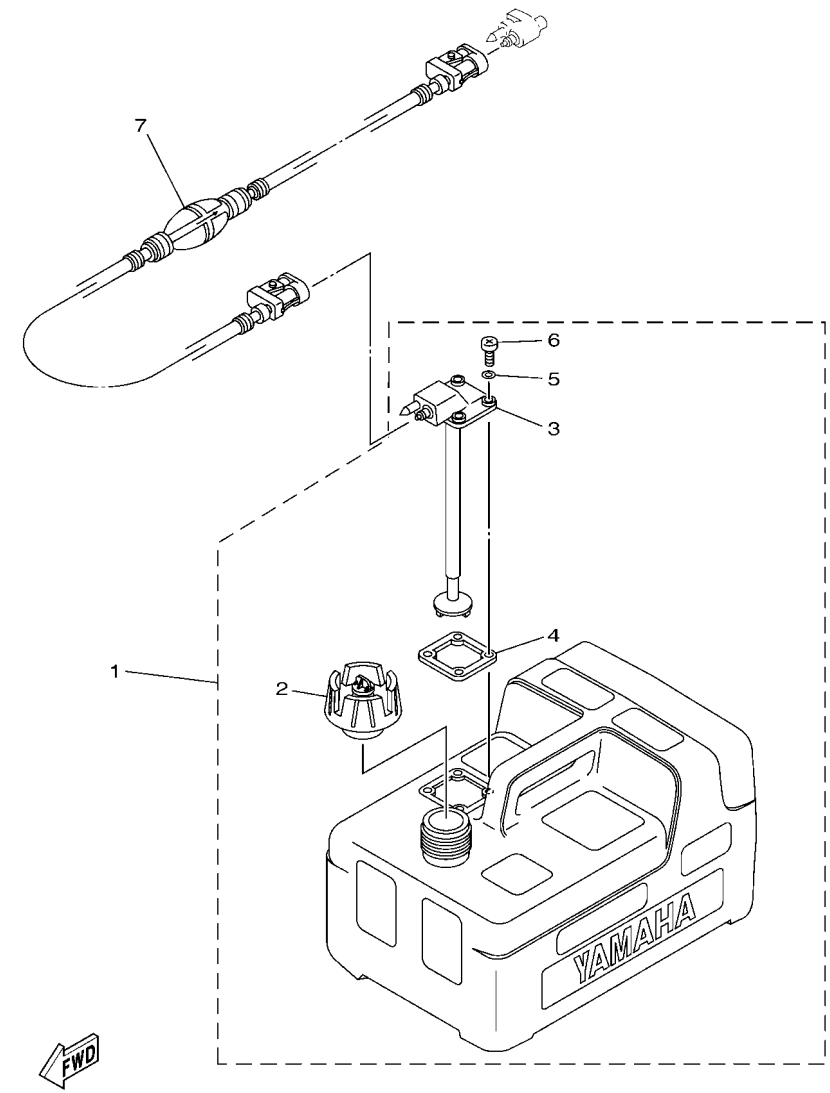

6FW5300-T280

FIG. 12 FUEL TANK — RESERVOIR A CARBURANT

REF. NO.	PART NO. N° PIECES	DESCRIPTION DESCRIPTION	6GP5					REMARKS REMARQUES
1	6YL–24201–07	FUEL TANK ASSY (12L) RESERVOIR A ESSENCE (ENS.) 12L	1					AP AP
2	6YK–24610–10	.CAP ASSY .BOUCHON	1					WITHOUT INDICATOR WITHOUT INDICATOR
3	6YL–24260–10	.FUEL METER ASSY .INDICATEUR DE CARBURANT	1					
4	6YL–24268–01	.GASKET, FUEL METER .JOINT, JAUGE A CARBURANT	1					
5	6YL–24329–00	.SEAL .JOINT	4					
6	90157–05M16	.SCREW, PAN HEAD .VIS, TETE TRONCONIQUE	4					
7	6YL–24306–54	FUEL PIPE COMP. 1 DURITE A ESSENCE 1	1					AP AP

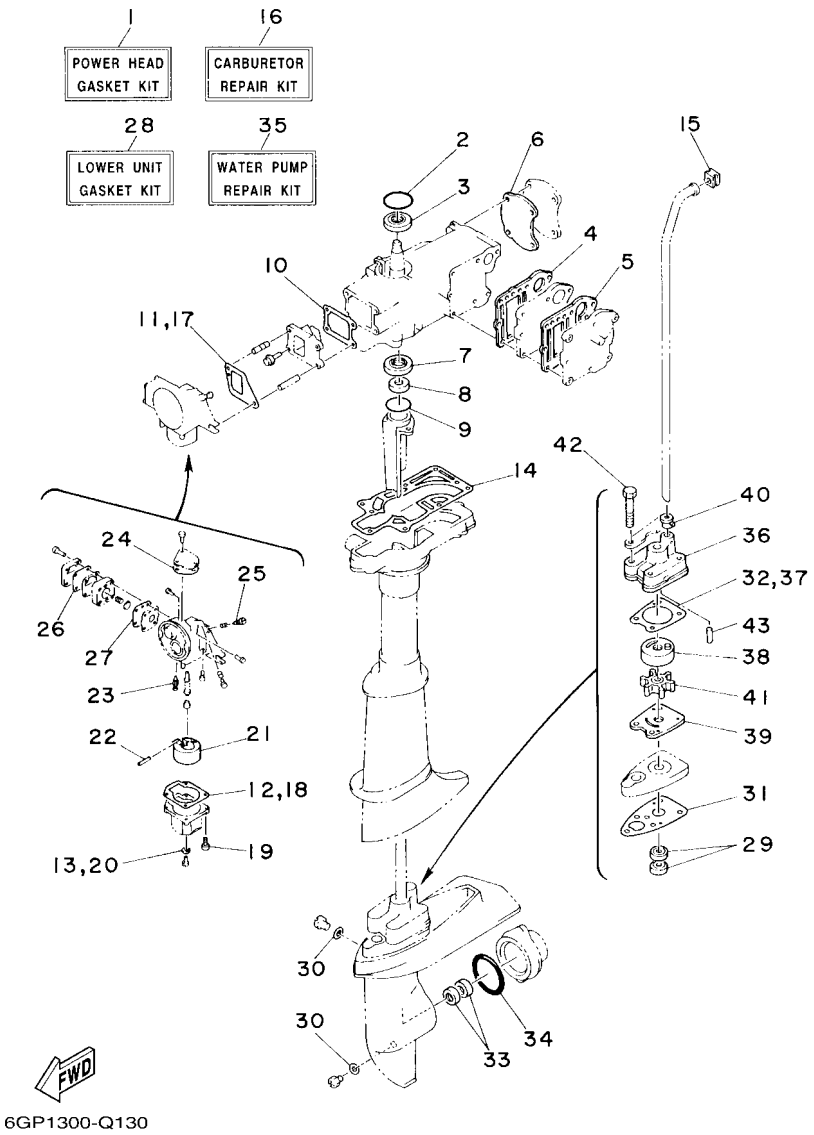

FIG. 13 REPAIR KIT — KITS DE REPARATION

REF. NO.	PART NO. N° PIECES	DESCRIPTION DESCRIPTION	6GP5					REMARKS REMARQUES
1	6E3–W0001–A4	POWER HEAD GASKET KIT POCHETTE DE JINTS TETE MOTRICE	1					
2	93210–42159	.O-RING .JOINT TORIQUE	1					
3	93102–20M25	.OIL SEAL .JOINT SPY	1					
4	6E3–41112–A1	.GASKET, EXHAUST INNER COVER .JOINT, PLAQUE D'ECHAPPEMENT	1					
5	6E3–41114–A1	.GASKET, EXHAUST OUTER COVER .JOINT, COUVERCLE D'ECHAPPEMENT	1					
6	6E3–11193–A1	.GASKET, HEAD COVER 1 .JOINT, COUVERCLE DE CULASSE 1	1					
7	93101–20M29	.OIL SEAL .JOINT SPY	1					
8	93101–10M25	.OIL SEAL .JOINT SPY	1					
9	93210–31MJ5	.O-RING .JOINT TORIQUE	1					
10	6E0–13621–A2	.GASKET, VALVE SEAT .JOINT, SIEGE DE CLAPET	1					
11	6E0–14198–A0	.GASKET .JOINT	1					
12	6E0–14384–00	.GASKET, FLOAT CHAMBER .JOINT, CUVE DE FLOTTEUR	1					
13	646–14198–01	.GASKET .JOINT	1					
14	6E0–45113–A1	.GASKET, UPPER CASING .JOINT, TUBE D'ARBRE	1					
15	646–44365–00	.DAMPER, WATER SEAL 1 .JOINT, TUBE D'EAU 1	1					
16	6E0–W0093–04	CARBURETOR REPAIR KIT KIT DE REPARATION CARBURATEUR	1					
17	6E0–14198–A0	.GASKET .JOINT	1					
18	6E0–14384–00	.GASKET, FLOAT CHAMBER .JOINT, CUVE DE FLOTTEUR	1					
19	97980–04116	.SCREW, WITH WASHER .VIS, AVEC RONDELLE	1					
20	646–14198–01	.GASKET .JOINT	1					
21	6E7–14385–01	.FLOAT .FLOTTEUR	1					
22	647–14386–00	.PIN, FLOAT .AXE, FLOTTEUR	1					
23	6F5–14392–00	.VALVE, NEEDLE .POINTEAU	1					
24	6E0–14227–00	.GASKET .JOINT	1					
25	647–14323–00	.SCREW, AIR ADJUSTING .VIS DE DOSEUR D'AIR	1					
26	6E0–24471–00	.DIAPHRAGM .DIAPHRAGME	1					
27	6E0–24411–00	.DIAPHRAGM .DIAPHRAGME	1					

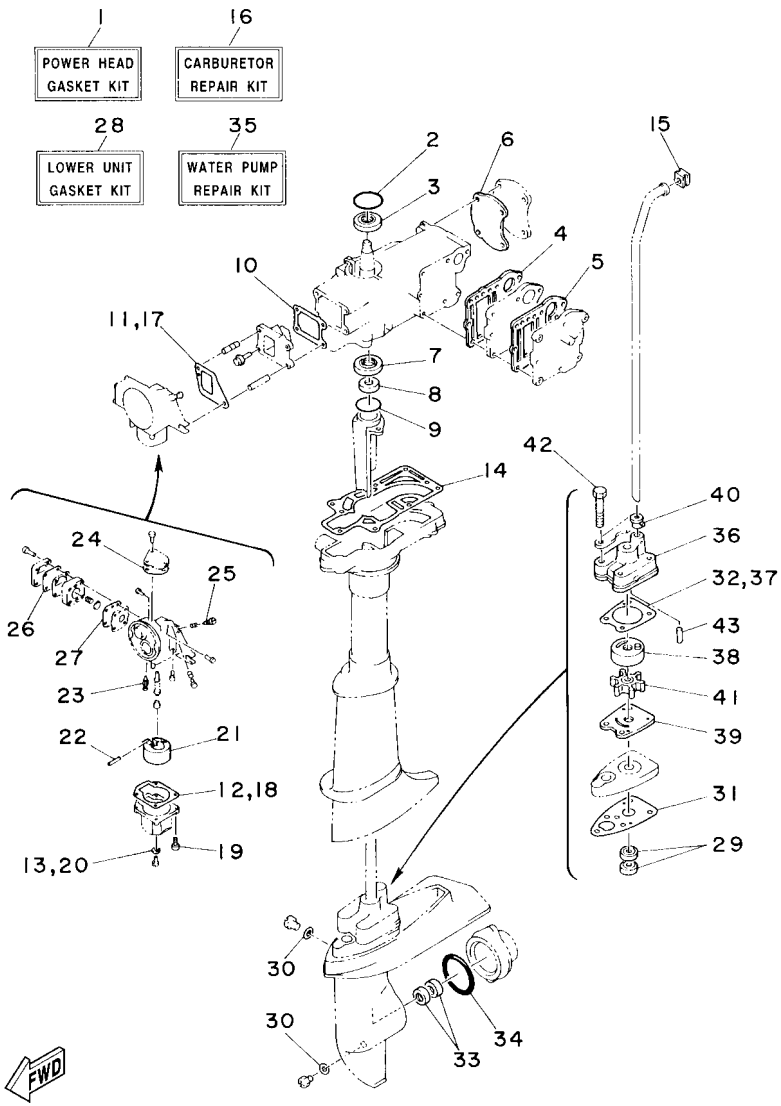

6GP1300-Q130

FIG. 13 REPAIR KIT — KITS DE REPARATION

REF. NO.	PART NO. N° PIECES	DESCRIPTION DESCRIPTION	6GP5					REMARKS REMARQUES
28	6E0–W0001–C1	LOWER UNIT GASKET KIT POCHETTE DE JOINTS EMBASE	1					
29	93101–10M14	.OIL SEAL .JOINT SPY	2					
30	90430–08003	.GASKET .JOINT	3					
31	6E0–45315–A0	.PACKING, LOWER CASING .JOINT, BOITIER D'HELICE	1					
32	6E0–44315–A0	.GASKET, WATER PUMP .JOINT, POMPE A EAU	1					
33	93101–13M12	.OIL SEAL .JOINT SPY	2					
34	93210–48214	.O-RING .JOINT TORIQUE	1					
35	6E0–W0078–A4	WATER PUMP REPAIR KIT KIT DE REPARATION DE LA POMPE	1					
36	6E0–44311–00	.HOUSING, WATER PUMP .CORPS, POMPE A EAU	1					
37	6E0–44315–A0	.GASKET, WATER PUMP .JOINT, POMPE A EAU	1					
38	6E0–44322–02	.INSERT, CARTRIDGE .CUVETTE	1					
39	6E0–44323–00	.OUTER PLATE, CARTRIDGE .PLAQUE EXTERIEURE	1					
40	6E0–44366–00	.DAMPER, WATER SEAL 2 .JOINT, TUBE D'EAU 2	1					
41	6E0–44352–00	.IMPELLER .TURBINE	1					
42	97D95–06045	.BOLT, HEXAGON DEEP RECESS .VIS HEXAGONAL	4					
43	93604–18080	.PIN, DOWEL .CLAVETTE	2					

PART NO. N° PIECES	REF. NO.
6E3–11191–01–1S	3 – 20
6E3–11193–A1	3 – 21
	13 – 6
650–11370–01	3 – 3
6E5–11372–01	3 – 5
6E3–11400–00	3 – 29
6E3–11412–00	3 – 30
6E3–11422–00	3 – 31
6J1–11610–00	3 – 40
6E3–11631–00–98	3 – 39
6G1–11633–00	3 – 42
6E0–11651–01	3 – 35
6G1–11681–00	3 – 32
6E5–12411–02	1 – 1
	3 – 44
6E5–12412–00	3 – 45
6E0–13610–00	4 – 1
6E0–13621–A2	4 – 3
	13 – 10
6E0–14157–00	4 – 17
6E0–14159–00	4 – 34
6E0–14180–00	4 – 6
646–14198–01	4 – 8
	13 – 13
	13 – 20
6E0–14198–A0	4 – 35
	13 – 11
	13 – 17
646–14212–01	4 – 21
6E0–14227–00	4 – 18
	13 – 24
6E3–14301–05	4 – 5
664–14321–01	4 – 22
647–14323–00	4 – 20
	13 – 25
647–14326–00	4 – 24
6E3–14341–02	4 – 14
648–14342–26	4 – 23
648–14343–40	4 – 15
6E0–14346–00	4 – 31
6E0–14381–02	4 – 7
6E0–14384–00	4 – 10
	13 – 12
	13 – 18
6E7–14385–01	4 – 12
	13 – 21
647–14386–00	4 – 13
	13 – 22

PART NO. N° PIECES	REF. NO.
6F5–14392–00	4 – 16
	13 – 23
6E0–14417–00	4 – 38
6E0–14418–00	4 – 39
624–14485–00	3 – 4
6E3–15100–02	3 – 2
6E0–15359–01	6 – 5
6E0–15396–03–CA	3 – 16
6E0–15705–00	5 – 11
6E4–15710–75–94	5 – 1
6E4–15711–72	5 – 2
6E0–15714–01	5 – 3
6E0–15717–00	5 – 5
6E0–15723–00	6 – 2
677–15741–01	5 – 9
6E4–15746–70	5 – 23
6E4–15747–70	5 – 26
656–15748–00	5 – 19
6G1–15755–00	5 – 14
6E3–15758–01	5 – 15
6E0–15761–00	5 – 16
6E4–15770–70	5 – 21
6E4–15772–71	5 – 22
6G1–15779–00	5 – 12
67D–21757–00	8 – 21
6E3–24111–00	8 – 13
6E3–24115–00	8 – 23
6E0–24181–00	8 – 28
6E3–24182–00	8 – 10
6E0–24183–00	6 – 18
6YL–24201–07	12 – 1
6E3–24217–00	8 – 49
6L5–24251–00	1 – 3
	8 – 29
68T–24251–01	1 – 4
	8 – 35
6YL–24260–10	12 – 3
6YL–24268–01	12 – 4
6G1–24304–10	8 – 37
6YL–24306–54	12 – 7
6E3–24311–00	8 – 30
6E3–24313–00	8 – 39
6E3–24314–00	8 – 33
6E3–24315–00	8 – 40
6YL–24329–00	12 – 5
6E0–24378–00	3 – 9
6E0–24411–00	4 – 32
	13 – 27

PART NO. N° PIECES	REF. NO.
6E0–24412–00	4 – 29
6E0–24413–00	4 – 26
6E0–24423–00	4 – 30
6E0–24434–00	4 – 33
6E0–24435–00	4 – 28
6E0–24471–00	4 – 27
	13 – 26
6E0–24500–10	8 – 32
6J1–24524–00	8 – 45
6E0–24591–10	8 – 48
68D–24610–10	8 – 14
6YK–24610–10	12 – 2
68D–24612–00	8 – 15
69M–24633–01	8 – 20
624–24634–00	8 – 19
6E3–24641–10	8 – 22
6E0–26301–01	9 – 24
6EE–2817K–00	2 – 15
6GP–28199–74–D0	2 – 17
6GP–28199–74–E0	2 – 17
6GP–28199–74–F0	2 – 17
6GP–28199–74–G0	2 – 17
6GP–28199–74–H0	2 – 17
6GP–28199–74–S0	2 – 17
6GP–28199–84–K0	2 – 18
6GP–28199–84–L0	2 – 18
6GP–28199–84–M0	2 – 18
6GP–28199–84–N0	2 – 18
6GP–28199–84–P0	2 – 18
6GP–28199–84–R0	2 – 18
6E3–41111–01–1S	3 – 23
6E3–41112–A1	3 – 24
	13 – 4
6E3–41113–01–1S	3 – 25
6E3–41114–A1	3 – 26
	13 – 5
6E0–41256–00	4 – 42
661–41262–02	4 – 46
6E0–41271–01	4 – 43
6E0–41272–00	4 – 44
6E0–42111–02–4D	9 – 1
6E0–42119–00	9 – 14
6E0–42125–00	9 – 9
6E4–42129–00	9 – 3
6E0–42129–02	9 – 2
6E0–42131–02–94	9 – 5
6E0–42134–02	9 – 10
6E0–42137–10	9 – 16

PART NO. N° PIECES	REF. NO.
6E0–42138–01	9 – 21
6E0–42159–02	9 – 22
6E0–42177–01	9 – 15
6E0–42528–03	10 – 45
6L5–42529–01	10 – 48
6E0–42537–02	10 – 41
6E0–42538–02	10 – 42
6E0–42539–00	10 – 43
6E0–42542–00	8 – 11
6E0–42549–00	10 – 44
6L5–42561–00	10 – 49
6GP–42610–00	2 – 1
6E0–42615–00	2 – 3
6GP–4261A–00	2 – 2
6E0–42647–01	2 – 4
6E0–42651–02	2 – 5
6E0–42675–40	2 – 7
6E0–42676–40	2 – 8
6E0–42678–40	2 – 9
6E0–42681–40	2 – 11
	2 – 12
6EE–42698–40	2 – 13
6EE–42698–50	2 – 14
6E0–42711–10–8D	8 – 1
6EE–42794–40	9 – 40
6EE–42794–50	9 – 41
6E0–42815–00–8D	8 – 2
6E0–42816–00	8 – 4
6E0–43111–02–8D	10 – 9
6E0–43112–01–8D	10 – 10
6A1–43113–01	10 – 17
620–43114–00	10 – 11
6E0–43116–01	10 – 12
6E0–43118–01	10 – 13
6E0–43160–01	10 – 34
689–43165–00	10 – 35
6E0–43181–00	10 – 27
620–43189–00	10 – 30
6E0–43311–05–8D	10 – 23
6E0–43312–02–8D	10 – 24
6E0–43313–00–94	10 – 29
6E0–43614–00–CA	10 – 37
6E0–43632–00	10 – 28
6GP–44111–00–8D	9 – 25
6E0–44116–00	9 – 29
6E0–44121–00	9 – 32
6E0–44143–00	9 – 34
6E0–44143–10	9 – 34

PART NO. N° PIECES	REF. NO.
6E0–44145–00	9 – 37
6E0–44146–00	9 – 38
6G1–44147–00	11 – 15
6E0–44150–00	11 – 53
6E0–44150–10	11 – 53
6X3–44191–00	2 – 10
6L5–44196–00	10 – 50
6L5–44197–00	10 – 51
6E0–44311–00	11 – 23
	13 – 36
6E0–44315–A0	11 – 24
	13 – 32
	13 – 37
6E0–44322–02	11 – 25
	13 – 38
6E0–44323–00	11 – 26
	13 – 39
6E0–44328–00	11 – 32
6E0–44352–00	11 – 28
	13 – 41
6E0–44361–00	11 – 33
6E0–44361–10	11 – 33
646–44365–00	11 – 34
	13 – 15
6E0–44366–00	11 – 27
	13 – 40
6E0–45111–02–8D	10 – 1
6E0–45111–12–8D	10 – 1
6E0–45113–A1	3 – 46
	13 – 14
647–45151–01	10 – 7
6L5–45251–03	1 – 5
	11 – 7
6E0–45300–04–8D	11 – 1
6E0–45300–14–8D	11 – 1
6E0–45311–02–8D	11 – 2
6E0–45315–A0	11 – 16
	13 – 31
6E0–45316–09	11 – 4
6E0–45317–09	11 – 3
6E0–45318–01	11 – 56
6E0–45321–01–CA	11 – 14
6E0–45331–00–CA	11 – 55
6E0–45361–01–8D	11 – 18
6E0–45511–01	11 – 35
6E0–45511–11	11 – 35
6E0–45551–00	11 – 37
6E0–45560–00	11 – 40

PART NO. N° PIECES	REF. NO.
6E0–45570–00	11 – 41
6E0–45611–01	11 – 48
6L5–45616–00	11 – 50
6E0–45631–00	11 – 43
654–45633–00	11 – 45
654–45635–00	11 – 47
6E0–45941–01	11 – 54
6E0–45943–01	11 – 54
6E0–45949–00	11 – 54
6L5–45987–01	11 – 49
6E0–81303–40	6 – 22
6E0–81303–80	6 – 22
6E0–81328–70	6 – 13
6E0–81336–70	6 – 12
6EE–81994–40	8 – 53
6EE–81994–50	8 – 54
6EE–81995–40	5 – 31
6EE–81995–50	5 – 32
6E0–82316–01	7 – 3
6A0–82317–00	8 – 25
6E0–82317–00	7 – 4
6E3–82370–21	7 – 2
682–82556–00	8 – 51
6E0–82575–00	8 – 50
689–8257Y–00	8 – 52
6E0–85520–70	6 – 6
6E0–85540–72	7 – 10
6E0–85548–00	7 – 9
6E0–85550–72	6 – 1
6E0–85560–71	6 – 4
6E0–85570–02	7 – 5
6E0–85592–70	6 – 10
6E0–85595–70	6 – 8
6E3–W0001–A4	13 – 1
6E0–W0001–C1	13 – 28
6E0–W0004–00	4 – 2
6E0–W0078–A4	1 – 7
	13 – 35
6E3–W0090–05–1S	3 – 1
6E0–W0093–04	13 – 16
656–W2810–02	2 – 16
90101–06335	10 – 20
90101–08M07	10 – 15
90105–06037	3 – 27
90105–06039	3 – 22
	3 – 28
90105–06M14	6 – 3
90105–06M16	3 – 7

NUMERICAL INDEX
INDEX NUMERIQUE

PART NO. N° PIECES	REF. NO.
90105–06M17	3 – 8
90116–06M08	4 – 48
90119–06287	5 – 25
90119–06302	11 – 12
90152–05011	9 – 19
90157–05M16	12 – 6
90159–04035	6 – 14
90159–04036	6 – 9
90159–05037	6 – 11
90159–05038	6 – 7
90159–05039	6 – 23
90159–05040	6 – 23
90170–10113	6 – 20
90170–16M35	8 – 44
90185–08057	10 – 18
90201–06M30	5 – 8
90201–08M03	10 – 16
90201–08M54	11 – 52
90201–10119	9 – 18
90201–10126	6 – 21
90201–11M49	11 – 39
90201–13M50	11 – 42
90201–32M48	3 – 38
90202–05088	5 – 29
90202–07M22	9 – 13
90202–12M16	4 – 45
90202–16061	9 – 28
90206–12052	8 – 5
90206–16M06	9 – 27
90209–18112	3 – 36
90243–04M01	10 – 14
90250–05046	11 – 44
90266–04M00	2 – 6
90266–04M05	10 – 52
90269–02M09	9 – 20
90280–04M06	6 – 19
90340–08002	11 – 11
90386–12069	8 – 3
90386–26M30	9 – 4
90386–26M33	9 – 8
90387–06119	8 – 26
90387–06504	5 – 24
90387–06M11	10 – 19
90387–06M14	11 – 13
90430–08003	1 – 6
	11 – 10
	13 – 30
90445–07M00	3 – 11

PART NO. N° PIECES	REF. NO.
90445–07M28	3 – 12
	3 – 14
90445–07M32	3 – 13
90464–09M21	8 – 42
90464–10M53	8 – 43
90464–12010	8 – 36
90465–08M62	8 – 47
90465–13M11	8 – 31
90467–06016	3 – 10
	3 – 15
90467–08004	8 – 34
	8 – 38
	8 – 41
90467–08M01	11 – 36
90468–07M02	3 – 47
90468–10005	5 – 27
90468–100A0	8 – 18
90480–10M13	10 – 8
90480–14M14	8 – 8
90480–25161	7 – 7
90501–10064	11 – 46
90501–100A5	8 – 16
90501–10227	5 – 20
90501–23215	9 – 17
90502–08M05	10 – 47
90508–14M10	10 – 38
90508–14M11	10 – 39
90508–16020	10 – 32
90508–16021	10 – 33
90510–08M03	5 – 4
91490–12010	9 – 12
91490–16010	5 – 30
	9 – 36
91490–25030	11 – 51
91690–30008	10 – 36
91790–05010	5 – 28
92903–05600	9 – 7
92990–04200	8 – 17
92990–05600	9 – 35
92990–06300	11 – 9
92990–06600	10 – 21
92995–06600	4 – 37
93101–10M14	11 – 5
	13 – 29
93101–10M25	3 – 18
	13 – 8
93101–13M12	11 – 20
	13 – 33

PART NO. N° PIECES	REF. NO.
93101–20M29	3 – 37
	13 – 7
93102–20M25	6 – 15
	13 – 3
93210–12327	9 – 26
93210–31MJ5	3 – 17
	13 – 9
93210–42159	6 – 16
	13 – 2
93210–48214	11 – 21
	13 – 34
93306–004U0	11 – 6
	11 – 19
93306–204U0	3 – 33
93310–112V0	3 – 41
93310–418V1	3 – 34
93420–22M03	11 – 57
93430–06M02	5 – 10
93450–13022	3 – 43
93604–09066	11 – 29
93604–18080	11 – 31
	13 – 43
93606–12019	3 – 6
	10 – 2
93700–06M03	10 – 6
	10 – 25
94702–00040	1 – 2
94702–00272	1 – 2
	3 – 48
95303–06600	5 – 7
95380–06600	10 – 22
95380–06700	4 – 36
	8 – 7
	9 – 30
	10 – 5
95380–08600	10 – 46
95627–06325	4 – 47
95D95–06010	10 – 40
95D95–06012	9 – 31
	11 – 8
95D95–06016	4 – 4
	5 – 17
	7 – 1
	11 – 22
95D95–06020	5 – 18
	7 – 11
	8 – 9
	9 – 39

PART NO. N° PIECES	REF. NO.
95D95–06020	10 – 31
95D95–06025	8 – 12
	9 – 33
95D95–06035	10 – 26
97013–05020	9 – 6
97080–06010	7 – 8
97313–06035	5 – 6
97780–40720	4 – 41
97885–05012	9 – 11
	9 – 23
97885–06030	8 – 6
97890–04007	4 – 19
97890–05006	4 – 9
97980–04116	4 – 11
	13 – 19
97980–04120	4 – 25
97980–04210	8 – 46
97980–05225	4 – 40
	11 – 58
97D95–06045	11 – 30
	13 – 42
97E95–06514	8 – 24
97E95–06516	3 – 19
	6 – 17
	7 – 6
	10 – 4
97E95–06525	8 – 27
	11 – 17
97E95–06530	10 – 3
99001–06600	11 – 38

PART NO. N° PIECES	REF. NO.

PART NO. N° PIECES	REF. NO.