YAMAHA

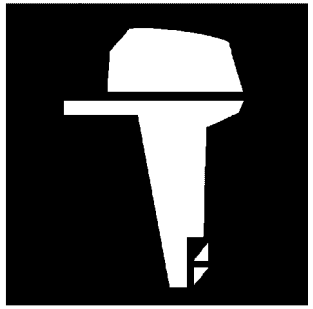

PARTS CATALOGUE

F130A-2020 (6EM6)

YAMAHA GENUINE Parts & Accessories

1U6EM-100EA

( )

F130A
PARTS CATALOGUE
©2020 by Yamaha Motor Co., Ltd.
1st edition, March 2020
All rights reserved.
Any reprinting or unauthorized use
without the written permission of
Yamaha Motor Co., Ltd.
is expressly prohibited.
Printed in Japan.

FOREWORD

This Parts Catalogue is related to the parts for the model(s) on the cover page. When you are ordering replacement parts, please refer to this Parts Catalogue and quote both part numbers and part names correctly.

1. Modifications or additions which have been made after the issue of the Parts Catalogue will be announced in the Parts News.
   It is advisable that you make the necessary corrections to the Parts Catalogue according to the Parts News.

2. Abbreviations
   The following abbreviations are used in this Parts Catalogue.
   "UR" Use specified parts number.
   "UN" Use as many as needed.
   "AP" Alternate Parts
   "LM" Locally Made (Parts need to be ordered locally)
   "F#" Frame No. (Applicable machine No.)
   "O/S" Over Size

3. The number of components for assembly
   - Parts, which are to be supplied in an assembly, are listed with a dot (.) in front of the part name as shown below.
   - The numeral appearing to the right of each component part indicates the quantity of parts for each assembly unit.

PART NO.	DESCRIPTION	Q'TY	REMARKS
2F5–83310–60	FRONT FLASHER LIGHT ASSY	2	
115–83311–60	.BULB (6V–18W)	1	

4. Applicable colours of graphics are represented in the "REMARKS" as shown below.

PART NO.	DESCRIPTION	Q'TY	REMARKS
2N4–24110–00–X5	FUEL TANK COMP.	2	MXR
3J1–24240–10	.GRAPHIC, FUEL TANK	1	FOR MXR

5. Note that the illustrations for reference in finding parts numbers are not to be used for assembling. When assembling, please use the applicable service manual.

6. The asterisk (*) before a reference number indicates modified items after the first edition.

7. Applicable Serial No.
   Engine Serial No.

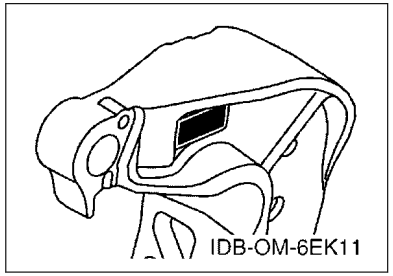

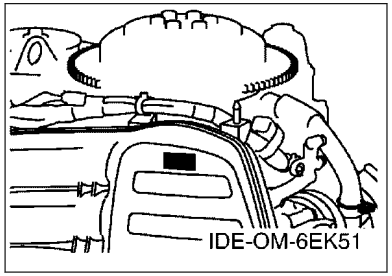

8. Applicable Engine Starting Serial No.

Model	Serial No.	Model	Serial No.
F130A	6EM-1008666		

9. Applicable Colour Code

Abbreviation	Colour Name	Colour Code
DBN1	DARK BLUISH GRAY 1	008D

10. Quantity Column Information

Column No.	Name Of Q'ty Column	Applicable Model
1	LA	F130LA
2	XA	F130XA

CONTENTS

SCHEDULED SERVICE PARTS....1
TOP COWLING....2
CYLINDER & CRANKCASE 1....3
CRANKSHAFT & PISTON....5
CYLINDER & CRANKCASE 2....7
VALVE....9
INTAKE 1....11
INTAKE 2....12
INTAKE 3....13
FUEL INJECTION PUMP 1....14
FUEL INJECTION PUMP 2....16
EXHAUST....17
FUEL 1....18
FUEL 2....20
GENERATOR....21
ELECTRICAL 1....22
ELECTRICAL 2....23
ELECTRICAL 3....25
ELECTRICAL 4....26
ELECTRICAL 5....27
STARTING MOTOR....29
BOTTOM COWLING 1....30
BOTTOM COWLING 2....32
CONTROL....33
BRACKET 1....35
BRACKET 2....37
POWER TRIM & TILT ASSY 1....39
POWER TRIM & TILT ASSY 2....42
UPPER CASING....43
OIL PAN....45
LOWER CASING & DRIVE 1....46
LOWER CASING & DRIVE 2....50
STEERING GUIDE....51
OPTIONAL PARTS 1....52
OPTIONAL PARTS 2....55
OPTIONAL PARTS 3....56
OPTIONAL PARTS 4....57
OPTIONAL PARTS 5....58
OPTIONAL PARTS 6....59
REPAIR KIT 1....60
REPAIR KIT 2....61

INDEX

NUMERICAL INDEX....63

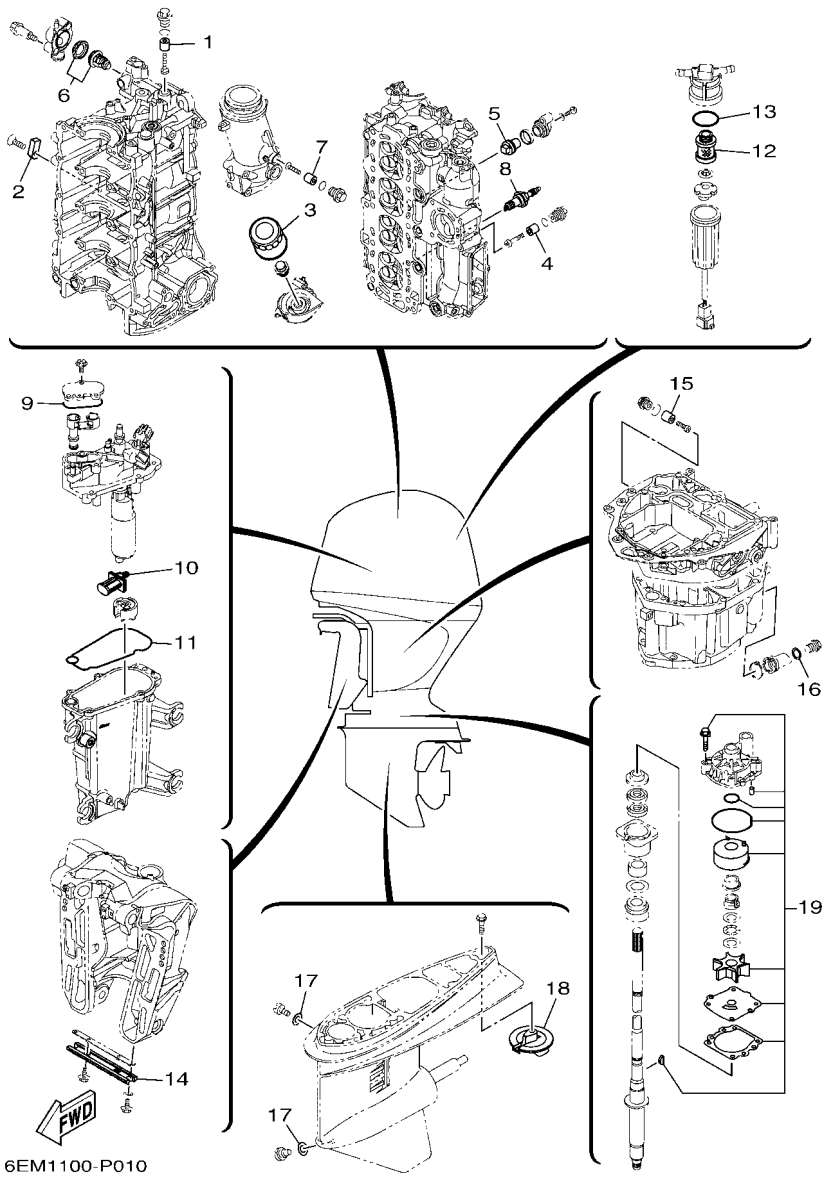

FIG. 1 SCHEDULED SERVICE PARTS

REF. NO.	PART NO.	DESCRIPTION	LA	XA				REMARKS
1	6G8–11325–00	ANODE	1	1				
2	63P–11325–01	ANODE	1	1				
3	5GH–13440–71	ELEMENT ASSY, OIL CLEANER	1	1				
4	6G8–11325–00	ANODE	1	1				
5	67F–11325–01	ANODE	1	1				
6	6EK–12411–00	THERMOSTAT	1	1				
7	6EK–11325–00	ANODE	1	1				
8	94702–00437	PLUG, SPARK (NGK LKR6E)	4	4				
9	6CB–13016–00	O-RING	1	1				
10	63P–13915–00	FILTER	1	1				
11	6CB–14984–00	GASKET, FLOAT CHAMBER	1	1				
12	6D8–24563–00	ELEMENT, FILTER	1	1				
13	6D8–24564–00	GASKET	1	1				
14	6H1–45251–03	ANODE	1	1				
15	6G8–11325–00	ANODE	1	1				
16	90430–14M09	GASKET	1	1				
17	90430–08003	GASKET	2	2				
18	6E5–45371–01	TAB-TRIM	1	1				
19	68V–W0078–00	WATER PUMP REPAIR KIT	1	1				

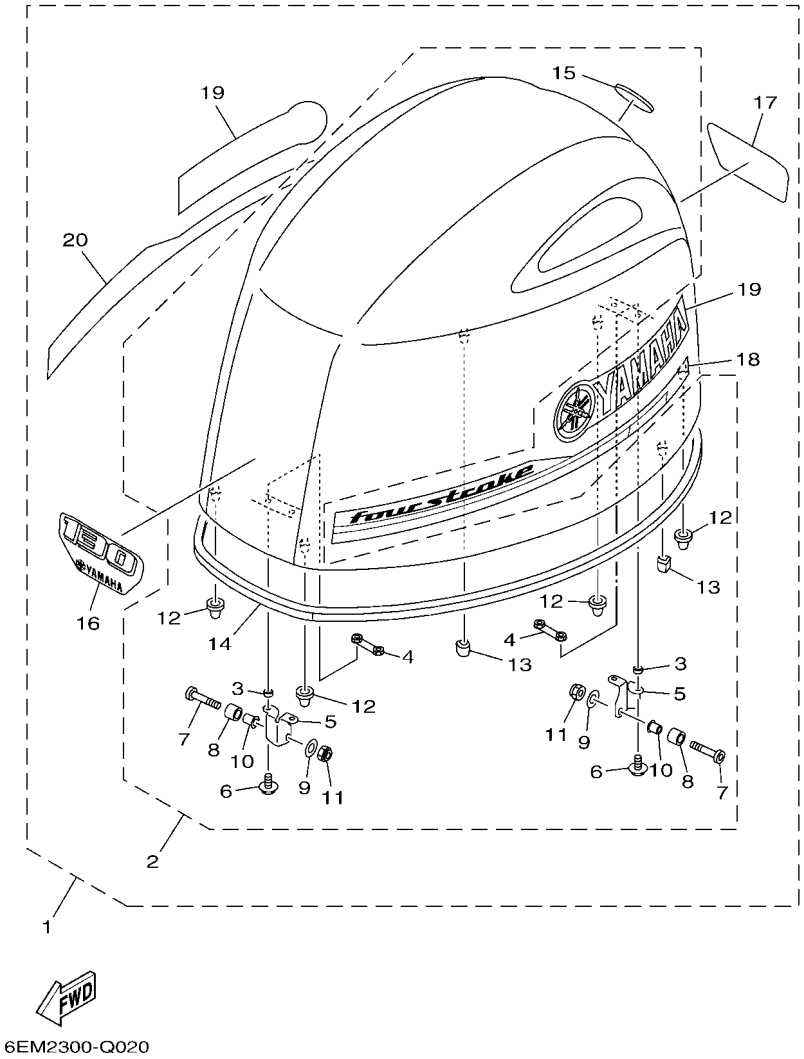

FIG. 2 TOP COWLING

REF. NO.	PART NO.	DESCRIPTION	LA	XA				REMARKS
1	6EM–42610–00	TOP COWLING ASSY	1	1				
2	6EK–4261A–00	.TOP COWLING W/O GRAPHICS	1	1				
3	90387–07046	..COLLAR	4	4				
4	6EK–42646–00	..PLATE, CLAMP	2	2				
5	6EK–42647–00	..HOLDER, CLAMP BAND	2	2				
6	90105–06039	..BOLT, FLANGE	4	4				
7	90111–08078	..BOLT,HEX. SOCKET BUTTON	2	2				
8	90387–10094	..COLLAR	2	2				
9	92990–08600	..WASHER, PLATE	2	2				
10	90387–08M45	..COLLAR	2	2				
11	95780–08300	..NUT, FLANGE	2	2				
12	68F–42663–00	..DAMPER 2	4	4				
13	6EK–42662–00	..DAMPER	2	2				
14	6EK–42615–01	..SEAL	1	1				
15	6DA–42697–00	..TUNING FORK MARK	1	1				
16	6EM–42677–00	.GRAPHIC, FRONT	1	1				
17	6EM–42678–00	.GRAPHIC, REAR	1	1				
18	6EK–42675–00	.GRAPHIC, SIDE 1	1	1				
19	6D6–42681–00	.MARK, COWLING	2	2				
20	6EK–42676–00	.GRAPHIC, SIDE 2	1	1				

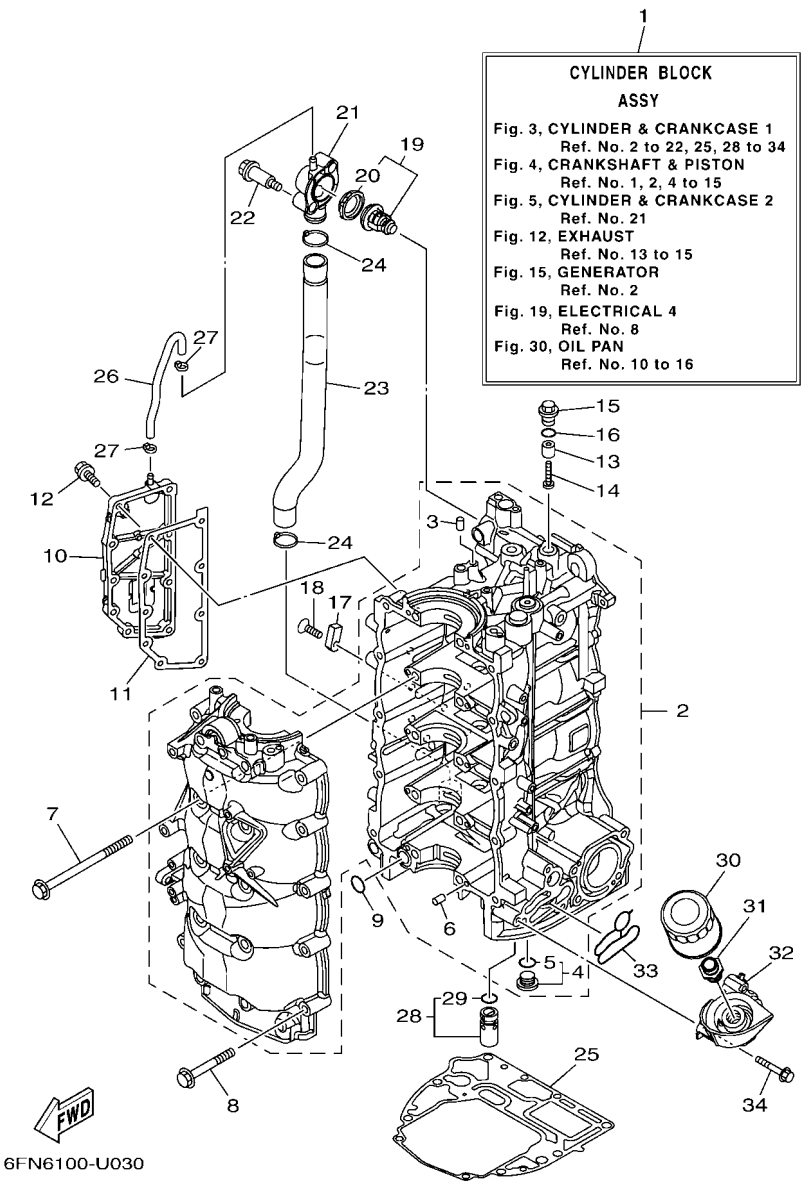

FIG. 3 CYLINDER & CRANKCASE 1

REF. NO.	PART NO.	DESCRIPTION	LA	XA				REMARKS
1	6EK–W009B–12–9S	CYLINDER BLOCK ASSY	1	1				
2	6EK–15109–02–9S	CRANKCASE ASSY	1	1				
3	93606–19M23	.PIN, DOWEL	1	1				
4	6EK–11313–00	.PLUG, BLIND	1	1				
5	93210–207A0	..O-RING	1	1				
6	93606–12019	.PIN, DOWEL	10	10				
7	90119–10057	BOLT, WITH WASHER	10	10				
8	90105–08170	BOLT, FLANGE	10	10				
9	93210–19MJ1	O-RING	1	1				
10	6EK–15414–00–9S	COVER 1	1	1				
11	6EK–15353–01	GASKET, DRAIN	1	1				
12	90105–06037	BOLT, FLANGE	9	9				
13	6G8–11325–00	ANODE	1	1				
14	98980–05025	SCREW, BIND	1	1				
15	6G8–11197–A0	PLUG, BLIND	1	1				
16	93210–13M63	O-RING	1	1				
17	63P–11325–01	ANODE	1	1				
18	90151–06M02	SCREW, COUNTERSUNK	1	1				
19	6EK–12411–00	THERMOSTAT	1	1				
20	6EK–12412–00	.SEAL, THERMOSTAT	1	1				
21	6EK–12413–00	COVER, THERMOSTAT	1	1				
22	90109–06286	BOLT	2	2				
23	6EK–1243A–00	HOSE 1	1	1				
24	90465–11M59	CLAMP	2	2				
25	6EK–11351–00	GASKET, CYLINDER	1	1				
26	6EK–12483–00	PIPE 3	1	1				
27	90465–11M10	CLAMP	2	2				

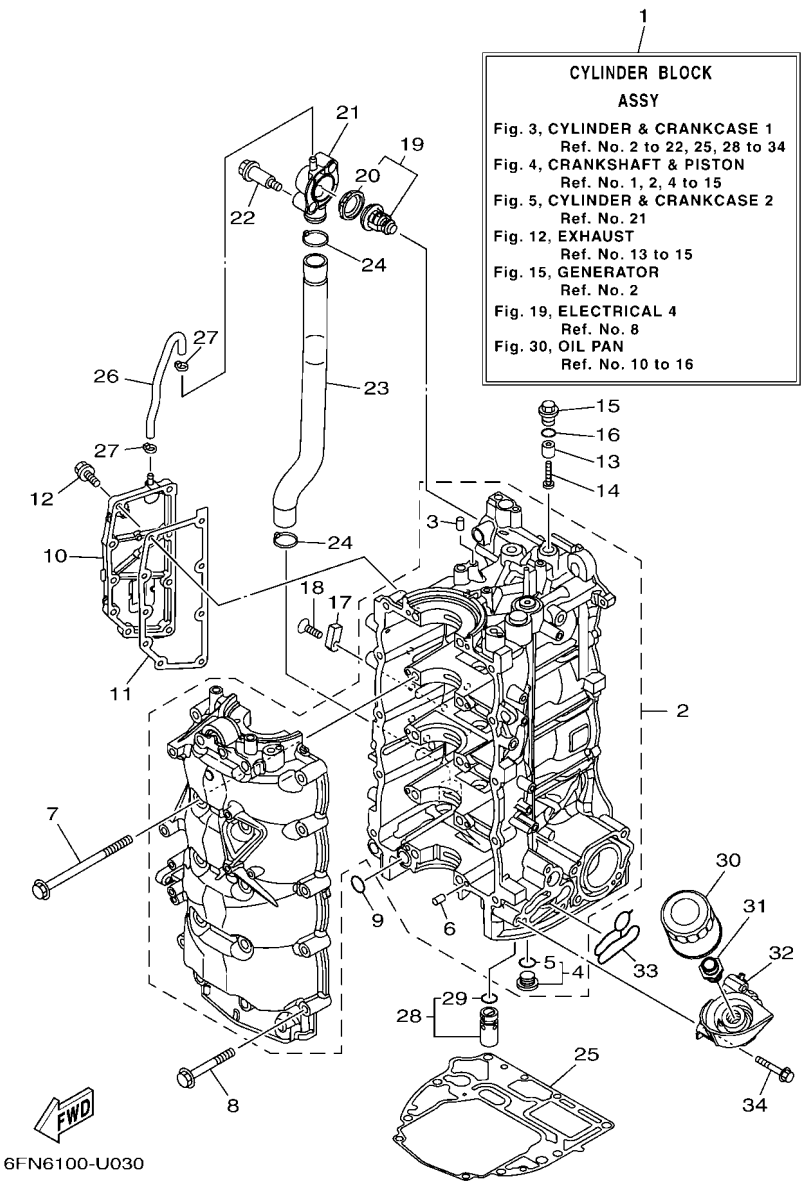

FIG. 3 CYLINDER & CRANKCASE 1

REF. NO.	PART NO.	DESCRIPTION	LA	XA				REMARKS
28	6EK–13490–00	RELIEF VALVE ASSY	1	1				
29	6CB–13473–00	.O-RING	1	1				
30	5GH–13440–71	ELEMENT ASSY, OIL CLEANER	1	1				
31	90401–20007	BOLT, UNION	1	1				
32	6EK–13446–00	CONNECTOR	1	1				
33	6EK–13475–00	GASKET	1	1				
34	90105–06151	BOLT, FLANGE	3	3				

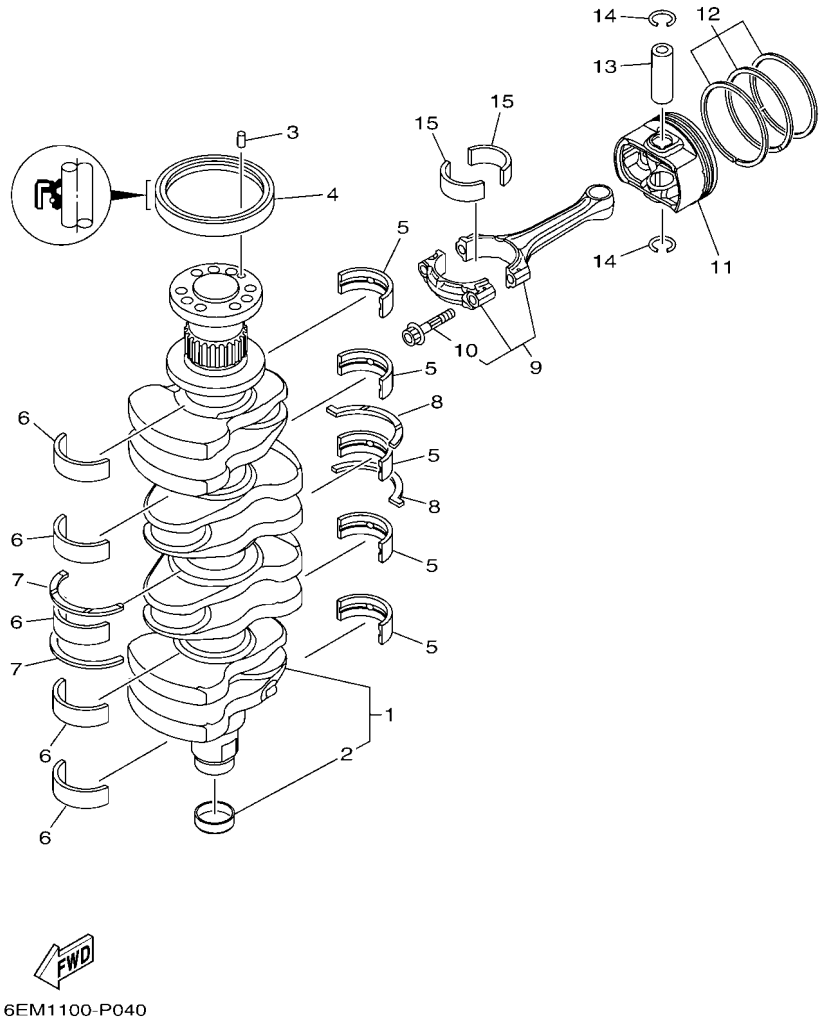

FIG. 4 CRANKSHAFT & PISTON

REF. NO.	PART NO.	DESCRIPTION	LA	XA				REMARKS
1	6EK–11410–01	CRANKSHAFT	1	1				
2	6CB–11478–00	.COLLAR	1	1				
3	93606–12019	PIN, DOWEL	1	1				
4	93102–85008	OIL SEAL	1	1				
5	6EK–11416–00	PLANE BEARING, CRANKSHAFT 1	5	5				UR YELLOW
	6EK–11416–10	PLANE BEARING, CRANKSHAFT 1	5	5				UR GREEN
	6EK–11416–20	PLANE BEARING, CRANKSHAFT 1	5	5				UR BLUE
	6EK–11416–30	PLANE BEARING, CRANKSHAFT 1	5	5				UR RED
	6EK–11416–40	PLANE BEARING, CRANKSHAFT 1	5	5				UR BLACK
6	6EK–11417–00	PLANE BEARING, CRANKSHAFT 2	5	5				UR YELLOW
	6EK–11417–10	PLANE BEARING, CRANKSHAFT 2	5	5				UR GREEN
	6EK–11417–20	PLANE BEARING, CRANKSHAFT 2	5	5				UR BLUE
	6EK–11417–30	PLANE BEARING, CRANKSHAFT 2	5	5				UR RED
	6EK–11417–40	PLANE BEARING, CRANKSHAFT 2	5	5				UR BLACK
7	6EK–11426–01	BEARING, THRUST 1	2	2				
8	6EK–11427–00	BEARING, THRUST 2	2	2				
9	6EK–W1165–00	CONNECTING ROD ASSY	4	4				
10	K1C–A3275–00	.BOLT, CONNECTING ROD	2	2				
11	6EK–11631–01–94	PISTON (STD)	4	4				
	6EK–11635–01	PISTON (0.25MM O/S)	4	4				AP
12	6EK–11603–00	PISTON RING SET (STD)	4	4				
	6EK–11604–00	PISTON RING SET (0.25MM O/S)	4	4				AP
13	6EK–11633–00	PIN, PISTON	4	4				
14	93450–19052	CIRCLIP	8	8				
15	6EK–11656–00	PLANE BEARING, CONNECTING ROD	8	8				UR YELLOW
	6EK–11656–10	PLANE BEARING, CONNECTING ROD	8	8				UR GREEN
	6EK–11656–20	PLANE BEARING, CONNECTING ROD	8	8				UR BLUE

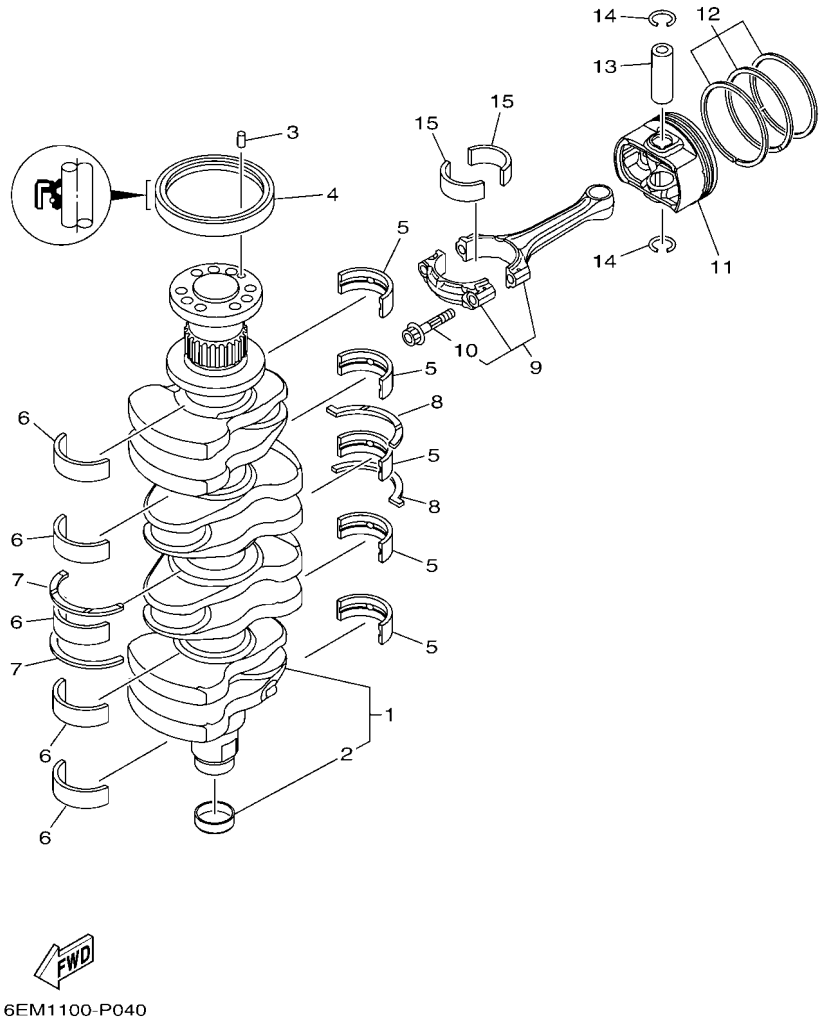

FIG. 4 CRANKSHAFT & PISTON

REF. NO.	PART NO.	DESCRIPTION	LA	XA				REMARKS
15	6EK–11656–30	PLANE BEARING, CONNECTING ROD	8	8				UR RED
	6EK–11656–40	PLANE BEARING, CONNECTING ROD	8	8				UR BLACK

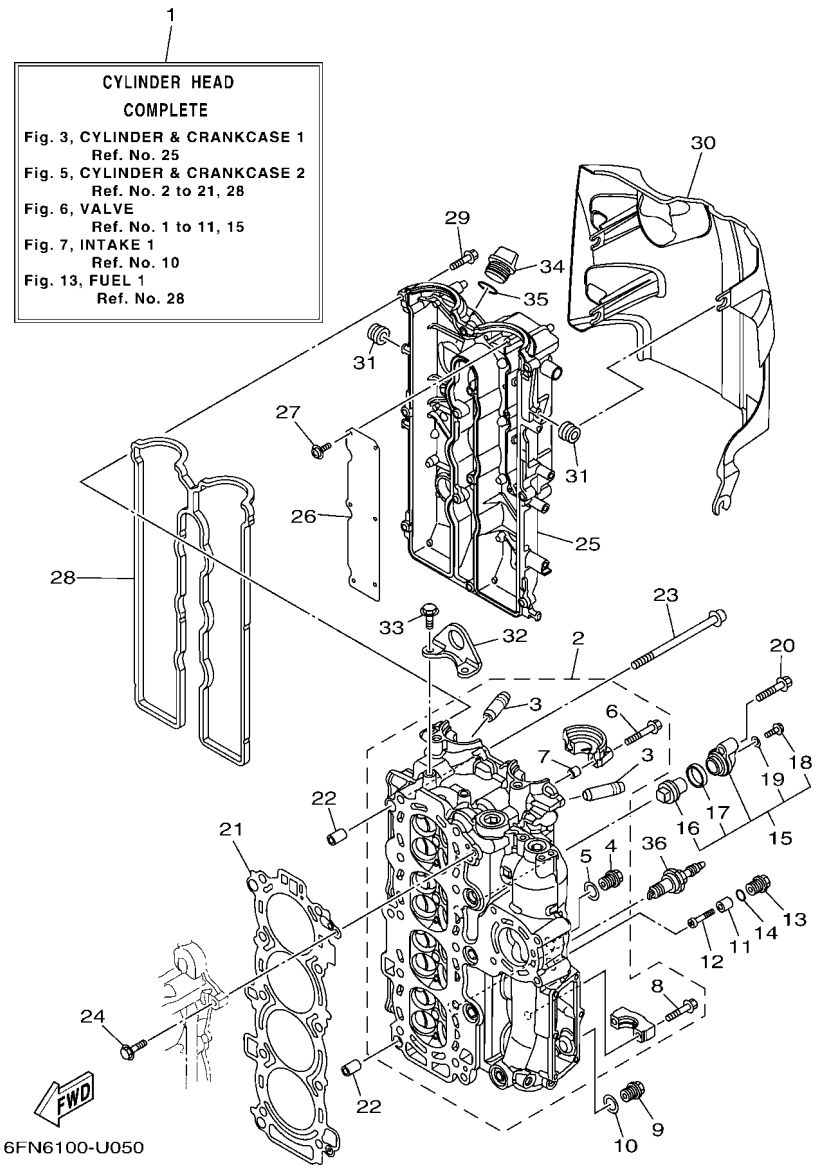

FIG. 5 CYLINDER & CRANKCASE 2

REF. NO.	PART NO.	DESCRIPTION	LA	XA				REMARKS
1	6EM–W009A–01–9S	CYLINDER HEAD COMPLETE	1	1				
2	6EM–11110–00–9S	CYLINDER HEAD ASSY	1	1				
3	6DA–11133–10	.GUIDE, VALVE 1	16	16				
4	90340–18M09	.PLUG, STRAIGHT SCREW	1	1				
5	90201–186F1	.WASHER, PLATE	1	1				
6	90119–07235	.BOLT/WASHER-CAM CAPS	4	4				
7	91809–08006	.PIN, DOWEL	4	4				
8	90119–07234	.BOLT, WITH WASHER	16	16				
9	90340–14M06	PLUG, STRAIGHT SCREW	1	1				
10	90430–14115	GASKET	1	1				
11	6G8–11325–00	ANODE	1	1				
12	98980–05025	SCREW, BIND	1	1				
13	6G8–11197–A0	PLUG, BLIND	1	1				
14	93210–13M63	O-RING	1	1				
15	69J–11301–00	ANODE COVER ASSY	1	1				
16	67F–11325–01	.ANODE	1	1				
17	67F–11328–00	.GROMMET, ANODE	1	1				
18	90105–06M07	.BOLT, FLANGE	1	1				
19	90430–06M03	.GASKET	1	1				
20	95D75–08040	BOLT, FLANGE DEEP RECESS	1	1				
21	6EK–11181–00	GASKET, CYLINDER HEAD 1	1	1				
22	99530–14016	PIN, DOWEL	2	2				
23	90149–10072	SCREW	10	10				
24	90105–06037	BOLT, FLANGE	1	1				
25	6EM–11191–00	COVER, CYLINDER HEAD 1	1	1				
26	6EK–11168–00	COVER, BREATHER	1	1				
27	97607–04208	SCREW, WITH WASHER	6	6				

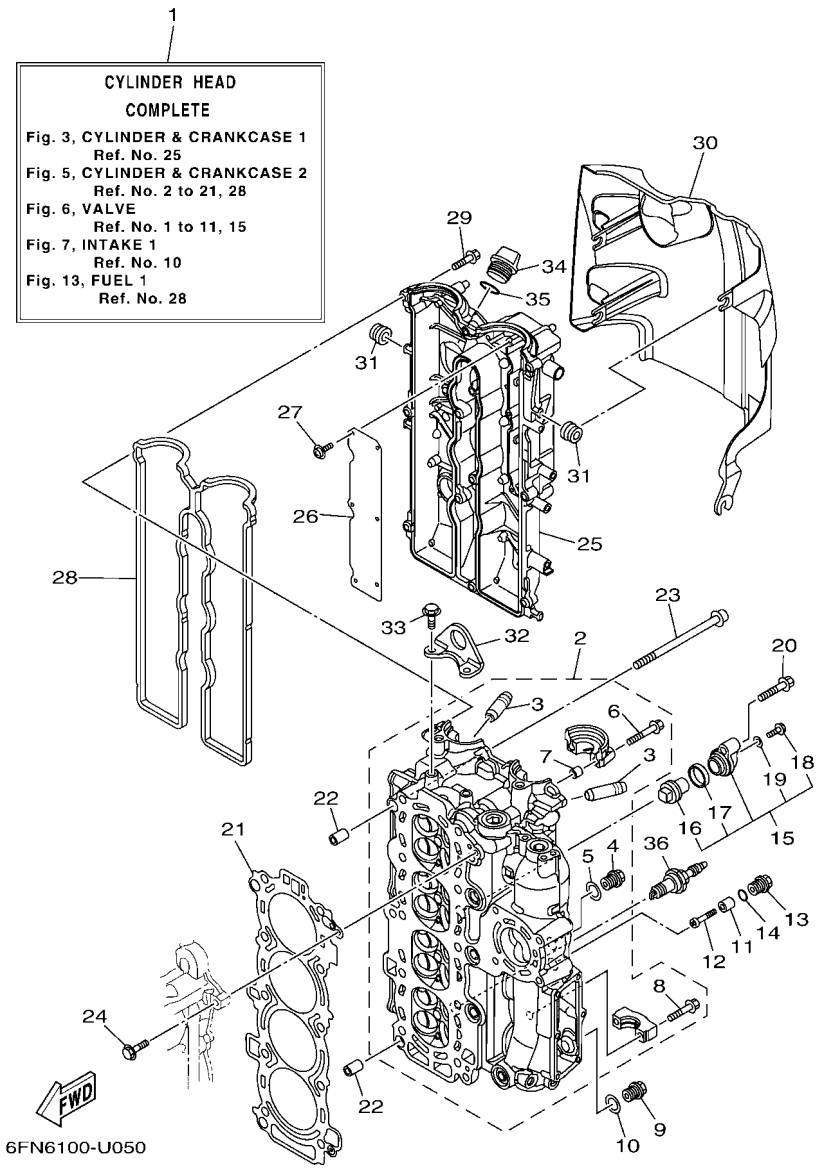

FIG. 5 CYLINDER & CRANKCASE 2

REF. NO.	PART NO.	DESCRIPTION	LA	XA				REMARKS
28	6EK–11193–00	GASKET, HEAD COVER 1	1	1				
29	95D95–06030	BOLT, FLANGE DEEP RECESS	12	12				
30	6EK–11192–00	COVER, CYLINDER HEAD 2	1	1				
31	90480–12314	GROMMET	4	4				
32	6EK–11119–00	HANGER, ENGINE	1	1				
33	95D95–08020	BOLT, FLANGE DEEP RECESS	2	2				
34	6G8–15363–00	PLUG, OIL	1	1				
35	93210–24M79	O-RING	1	1				
36	94702–00437	PLUG, SPARK (NGK LKR6E)	4	4				

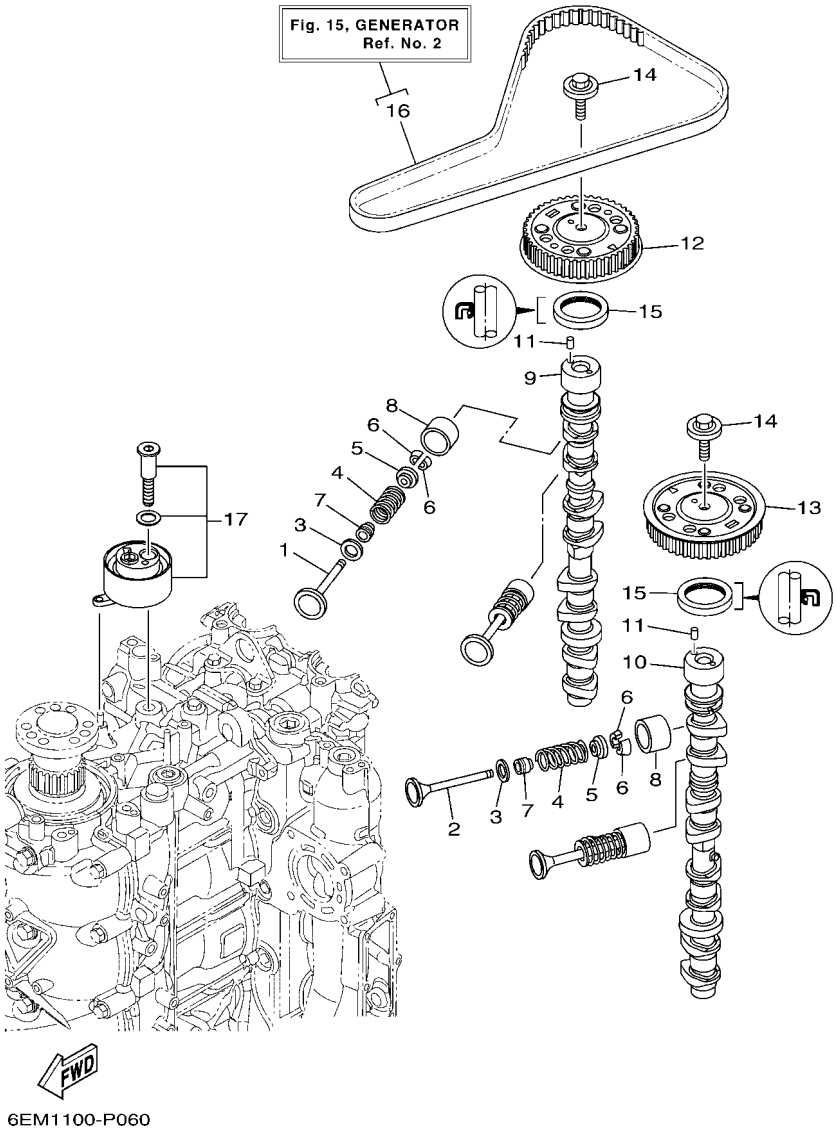

FIG. 6 VALVE

REF. NO.	PART NO.	DESCRIPTION	LA	XA				REMARKS
1	6EK–12111–00	VALVE, INTAKE	8	8				
2	6EK–12121–00	VALVE, EXHAUST	8	8				
3	62Y–12116–00	SEAT, VALVE SPRING	16	16				
4	30X–12114–00	SPRING, VALVE OUTER	16	16				
5	30X–12117–00	RETAINER, VALVE SPRING	16	16				
6	30X–12118–00	LOCK, VALVE SPRING RETAINER	32	32				
7	51Y–12119–00	SEAL, VALVE STEM	16	16				
8	6D8–12153–00	LIFTER, VALVE (12)	16	16				UR
	6D8–12153–10	LIFTER, VALVE (14)	16	16				UR
	6D8–12153–20	LIFTER, VALVE (16)	16	16				UR
	6D8–12153–30	LIFTER, VALVE (18)	16	16				UR
	6D8–12153–40	LIFTER, VALVE (20)	16	16				UR
	6D8–12153–50	LIFTER, VALVE (22)	16	16				UR
	6D8–12153–60	LIFTER, VALVE (24)	16	16				UR
	6D8–12153–70	LIFTER, VALVE (26)	16	16				UR
	6D8–12153–80	LIFTER, VALVE (28)	16	16				UR
	6D8–12153–90	LIFTER, VALVE (30)	16	16				UR
	6D8–12153–A0	LIFTER, VALVE (32)	16	16				UR
	6D8–12153–B0	LIFTER, VALVE (34)	16	16				UR
	6D8–12153–C0	LIFTER, VALVE (36)	16	16				UR
	6D8–12153–D0	LIFTER, VALVE (38)	16	16				UR
	6D8–12153–E0	LIFTER, VALVE (40)	16	16				UR
	6D8–12153–F0	LIFTER, VALVE (42)	16	16				UR
	6D8–12153–G0	LIFTER, VALVE (44)	16	16				UR
	6D8–12153–H0	LIFTER, VALVE (46)	16	16				UR
	6D8–12153–J0	LIFTER, VALVE (48)	16	16				UR
	6D8–12153–K0	LIFTER, VALVE (50)	16	16				UR

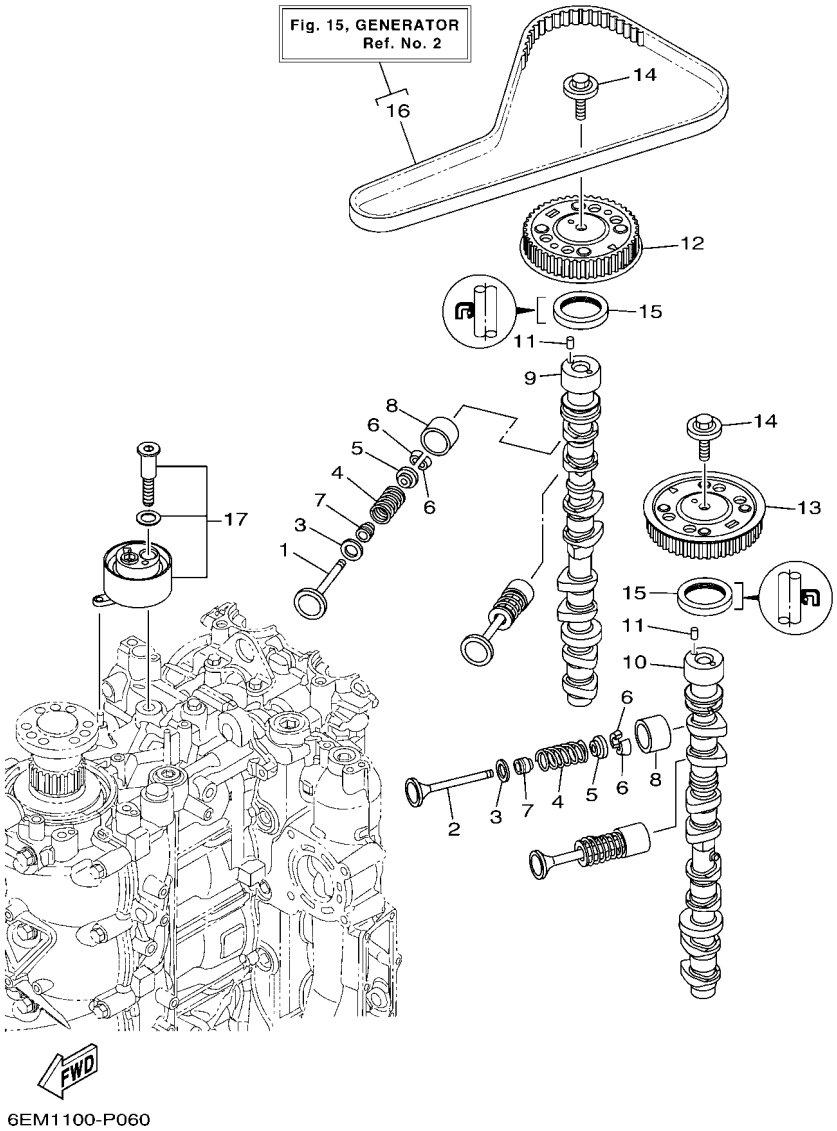

FIG. 6 VALVE

REF. NO.	PART NO.	DESCRIPTION	LA	XA				REMARKS
8	6D8–12153–L0	LIFTER, VALVE (52)	16	16				UR
	6D8–12153–M0	LIFTER, VALVE (54)	16	16				UR
	6D8–12153–N0	LIFTER, VALVE (56)	16	16				UR
	6D8–12153–P0	LIFTER, VALVE (58)	16	16				UR
	6D8–12153–R0	LIFTER, VALVE (60)	16	16				UR
	6D8–12153–S0	LIFTER, VALVE (62)	16	16				UR
	6D8–12153–T0	LIFTER, VALVE (64)	16	16				UR
	6D8–12153–U0	LIFTER, VALVE (66)	16	16				UR
	6D8–12153–V0	LIFTER, VALVE (68)	16	16				UR
9	6EM–12171–00	CAMSHAFT 1	1	1				
10	6EK–12181–00	CAMSHAFT 2	1	1				
11	93605–10108	PIN, DOWEL	2	2				
12	6EK–11537–00	GEAR, DRIVEN	1	1				
13	6EK–11567–00	GEAR, DRIVEN 2	1	1				
14	90119–10050	BOLT, WITH WASHER	2	2				
15	93102–38008	OIL SEAL	2	2				
16	6EK–W4624–00	BELT (WITH ROTOR BOLTS)	1	1				
17	6EK–11590–00	TENSIONER ASSY	1	1				

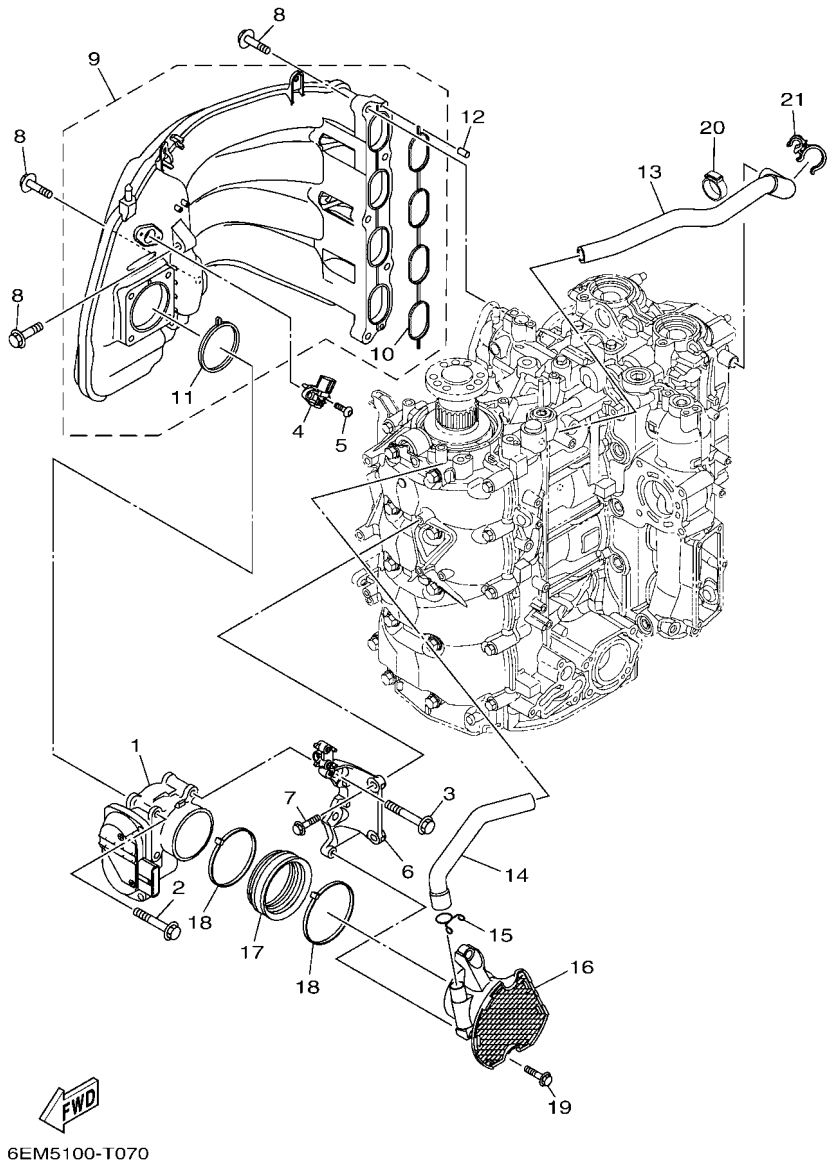

FIG. 7 INTAKE 1

REF. NO.	PART NO.	DESCRIPTION	LA	XA				REMARKS
1	6EM–13751–00	BODY, THROTTLE 1	1	1				
2	95D75–08060	BOLT, FLANGE DEEP RECESS	2	2				
3	90105–08186	BOLT, FLANGE	2	2				
4	68F–83688–10	SENSOR ASSY	1	1				
5	90111–05037	BOLT,HEX. SOCKET BUTTON	2	2				
6	6EK–13152–02	STAY 2	1	1				
7	95D75–06025	BOLT, FLANGE DEEP RECESS	2	2				
8	90119–08022	BOLT, WITH WASHER	8	8				
9	6EM–13641–00	MANIFOLD, INTAKE 1	1	1				
10	6EK–13645–00	.GASKET, MANIFOLD 1	1	1				
11	6EK–13646–00	.GASKET, MANIFOLD 2	1	1				
12	91690–50014	PIN, SPRING	2	2				
13	6EK–15373–10	PIPE, BREATHER	1	1				
14	6EK–15393–00	PIPE, BREATHER 2	1	1				
15	90467–23M16	CLIP	1	1				
16	6DA–14440–00	SILENCER ASSY, INTAKE	1	1				
17	6P2–1441J–00	PIPE, SILENCER	1	1				
18	90464–99004	CLAMP	2	2				
19	95D75–06025	BOLT, FLANGE DEEP RECESS	2	2				
20	90464–26001	CLAMP	1	1				
21	90464–21002	CLAMP	1	1				

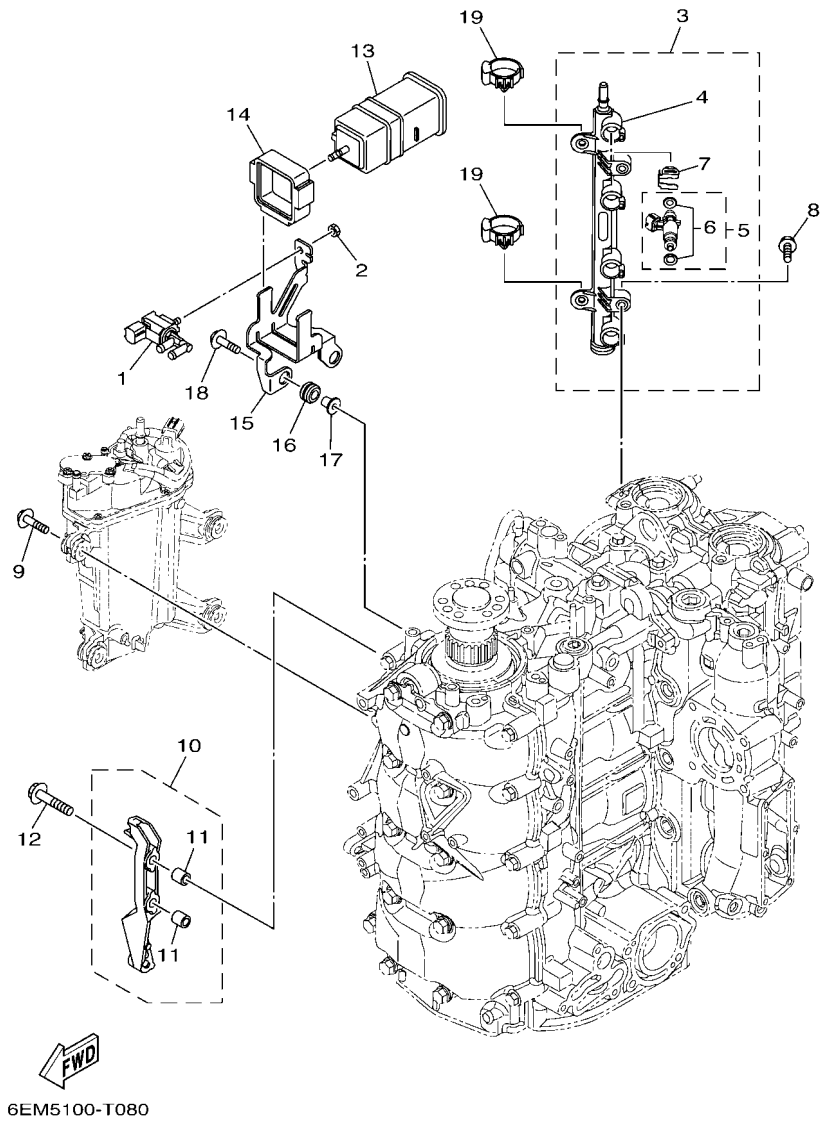

FIG. 8 INTAKE 2

REF. NO.	PART NO.	DESCRIPTION	LA	XA				REMARKS
1	6C5–86120–00	SOLENOID VALVE ASSY	1	1				
2	95380–06600	NUT, HEXAGON	1	1				
3	6EK–13160–00	DELIVERY PIPE ASSY 1	1	1				
4	6EK–13161–00	.PIPE, DELIVERY 1	1	1				
5	6EK–13761–00	.INJECTOR	4	4				
6	6AW–1410B–00	..PACKING KIT	1	1				
7	6AW–13577–10	.CLIP	4	4				
8	90105–06M08	BOLT, FLANGE	2	2				
9	90119–06269	BOLT, WITH WASHER	4	4				
10	6EM–14291–00	BRACKET 1	1	1				
11	99590–10114	.PIN, DOWEL	2	2				
12	90105–08M87	BOLT, FLANGE	2	2				
13	6P2–24170–00	CANISTER ASSY	1	1				
14	6FP–2419E–00	COVER, CANISTER	1	1				
15	6EK–2134X–10	BRACKET, CANISTER	1	1				
16	90480–10M23	GROMMET	2	2				
17	90387–06289	COLLAR	2	2				
18	90119–06M17	BOLT, WITH WASHER	2	2				
19	90464–07209	CLAMP	2	2				

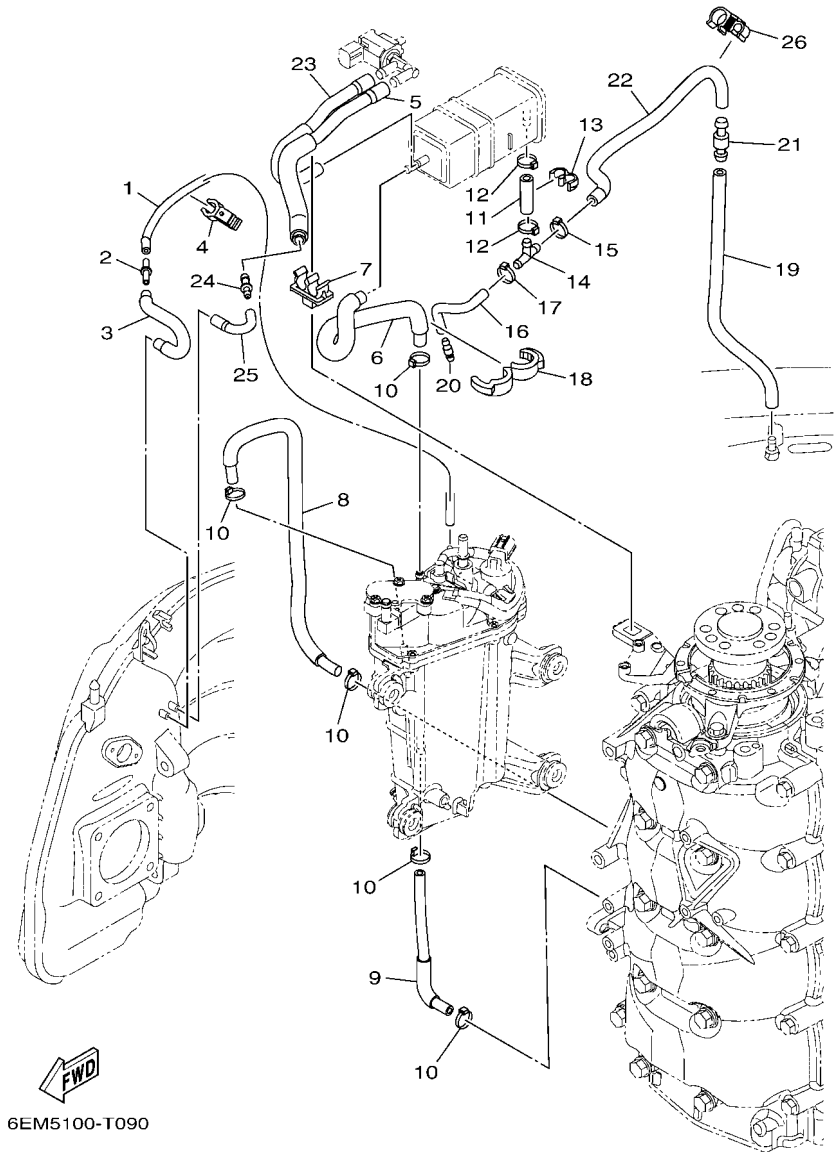

FIG. 9 INTAKE 3

REF. NO.	PART NO.	DESCRIPTION	LA	XA				REMARKS
1	6EK–13532–00	HOSE, VACUUM SENSING 3	1	1				
2	5PS–14568–00	JOINT	1	1				
3	6EM–1475H–00	PIPE 5	1	1				
4	90464–12006	CLAMP	1	1				
5	6EM–2416A–10	HOSE	1	1				
6	6EM–1475A–00	PIPE 1	1	1				
7	90464–11012	CLAMP	1	1				
8	6EK–12576–00	HOSE 1	1	1				
9	6EK–12577–00	HOSE 2	1	1				
10	90465–11M10	CLAMP	5	5				
11	6AW–13545–10	HOSE 1	1	1				
12	90465–11M10	CLAMP	2	2				
13	90464–10M57	CLAMP	1	1				
14	688–24378–00	PIPE, JOINT 3	1	1				
15	90465–11M10	CLAMP	1	1				
16	6EK–13546–00	HOSE 2	1	1				
17	90465–11M10	CLAMP	1	1				
18	90464–16001	CLAMP	1	1				
19	6EK–13547–00	HOSE 3	1	1				
20	6E5–21744–00	BREATHER	1	1				
21	63D–21744–00	BREATHER	1	1				
22	6EK–13548–01	HOSE, AIR 4	1	1				
23	6EK–1475F–10	PIPE 3	1	1				
24	6EK–14989–00	ORIFICE, AIR VENT	1	1				
25	6EM–1475G–00	PIPE 4	1	1				
26	90464–12010	CLAMP	1	1				

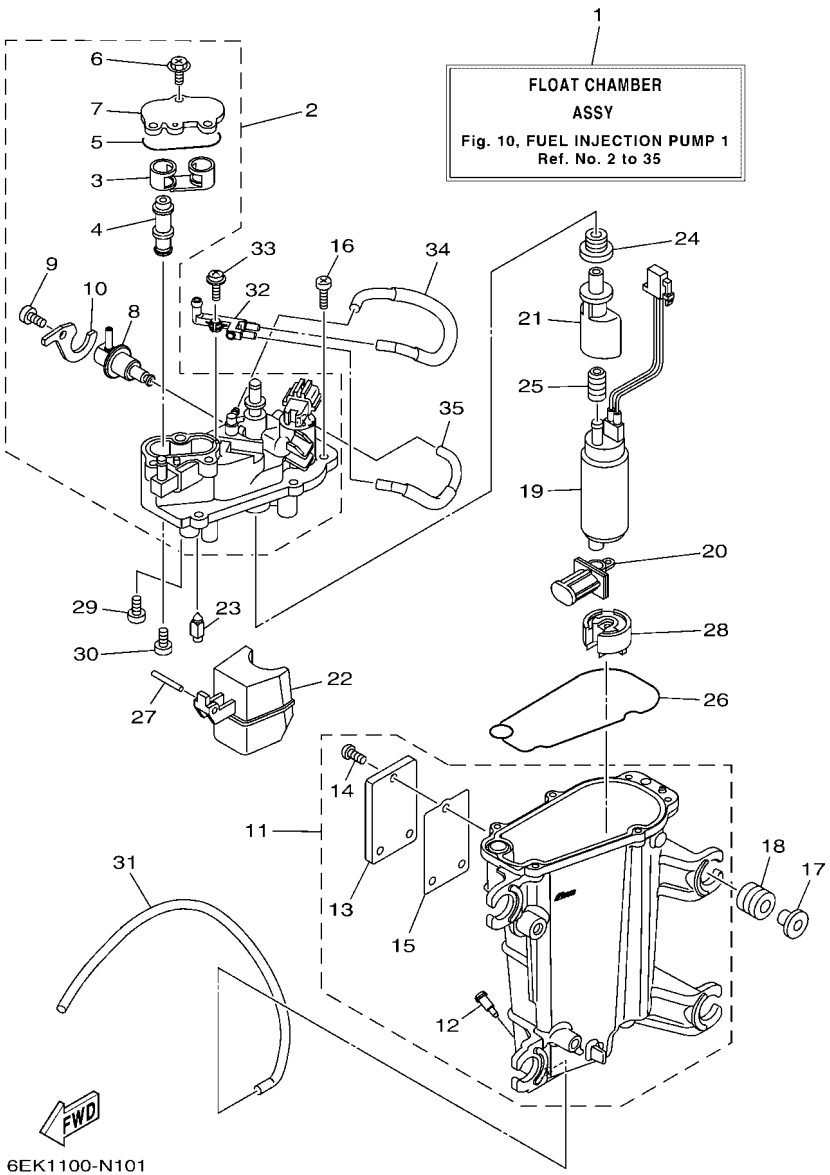

FIG. 10 FUEL INJECTION PUMP 1

REF. NO.	PART NO.	DESCRIPTION	LA	XA				REMARKS
1	6EK–14180–02	FLOAT CHAMBER ASSY	1	1				
2	6EK–14182–00	COVER, FLOAT CHAMBER	1	1				
3	6EK–24478–00	.JOINT	1	1				
4	6EK–24481–00	.PLUG	1	1				
5	6CB–13016–00	.O-RING	1	1				
6	6CB–14216–00	.SCREW	3	3				
7	6CB–24217–00	.COVER	1	1				
8	6CB–13906–01	.REGULATOR, PRESSURE	1	1				
9	6CB–14564–00	.SCREW	1	1				
10	6DA–14146–00	.PLATE	1	1				
11	6EK–14181–00	BODY, FLOAT CHAMBER 1	1	1				
12	6P2–14191–00	.PLUG, DRAIN	1	1				
13	6EK–24452–00	.COVER	1	1				
14	6K8–14591–10	.SCREW	3	3				
15	6CB–24482–00	.GASKET 1	1	1				
16	63P–14567–00	SCREW	6	6				
17	63P–13716–00	COLLAR	4	4				
18	6CB–13593–00	DAMPER	4	4				
19	68V–13907–21	FUEL PUMP COMP.	1	1				
20	63P–13915–00	FILTER	1	1				
21	6AW–13132–00	JOINT	1	1				
22	6CB–14985–00	FLOAT	1	1				
23	6CB–14546–00	VALVE, NEEDLE	1	1				
24	6CB–1447B–00	BUSH 1	1	1				
25	6AW–13781–00	DAMPER, PUMP	1	1				
26	6CB–14984–00	GASKET, FLOAT CHAMBER	1	1				
27	6P2–14386–00	PIN, FLOAT	1	1				

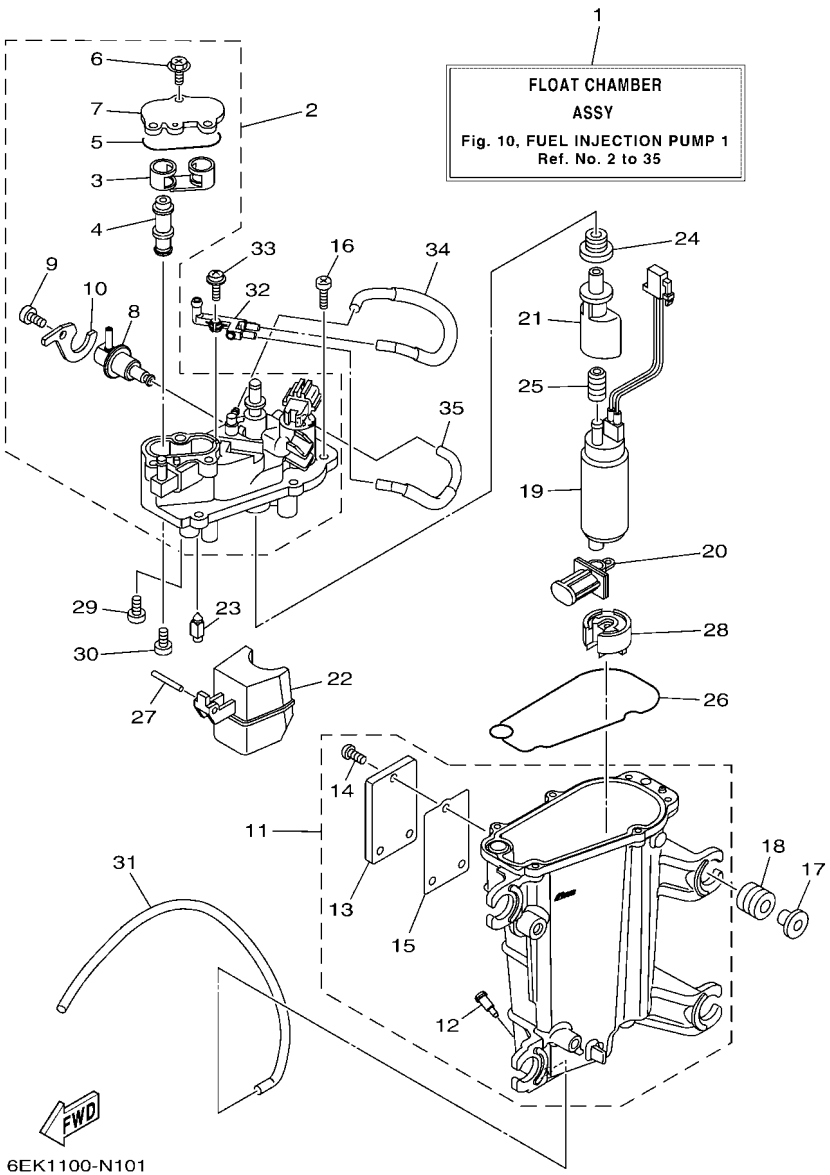

FIG. 10 FUEL INJECTION PUMP 1

REF. NO.	PART NO.	DESCRIPTION	LA	XA				REMARKS
28	6AW–13784–00	COVER, PUMP	1	1				
29	4SV–24453–00	SCREW	1	1				
30	98507–04008	SCREW, PAN HEAD	1	1				
31	6AW–14197–00	PIPE	1	1				
32	68V–24379–10	PIPE, JOINT 4	1	1				
33	68V–14216–00	SCREW	1	1				
34	6EK–1475H–00	PIPE 5	1	1				
35	6EK–1475J–00	PIPE 6	1	1				

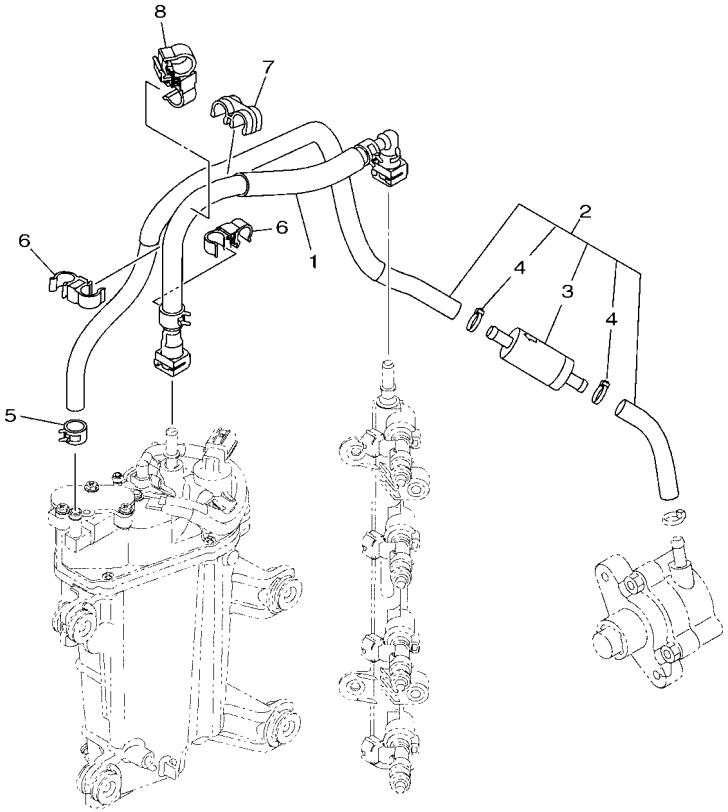

6EK1100-N110

FIG. 11 FUEL INJECTION PUMP 2

REF. NO.	PART NO.	DESCRIPTION	LA	XA				REMARKS
1	6EK–2450B–01	FUEL HOSE ASSY	1	1				
2	6EK–24330–00	FUEL PIPE ASSY	1	1				
3	6C5–24251–00	.STRAINER 1	1	1				
4	90465–11M10	.CLAMP	2	2				
5	90467–120A7	CLIP	1	1				
6	90464–12009	CLAMP	2	2				
7	90464–12224	CLAMP	1	1				
8	90464–12012	CLAMP	1	1				

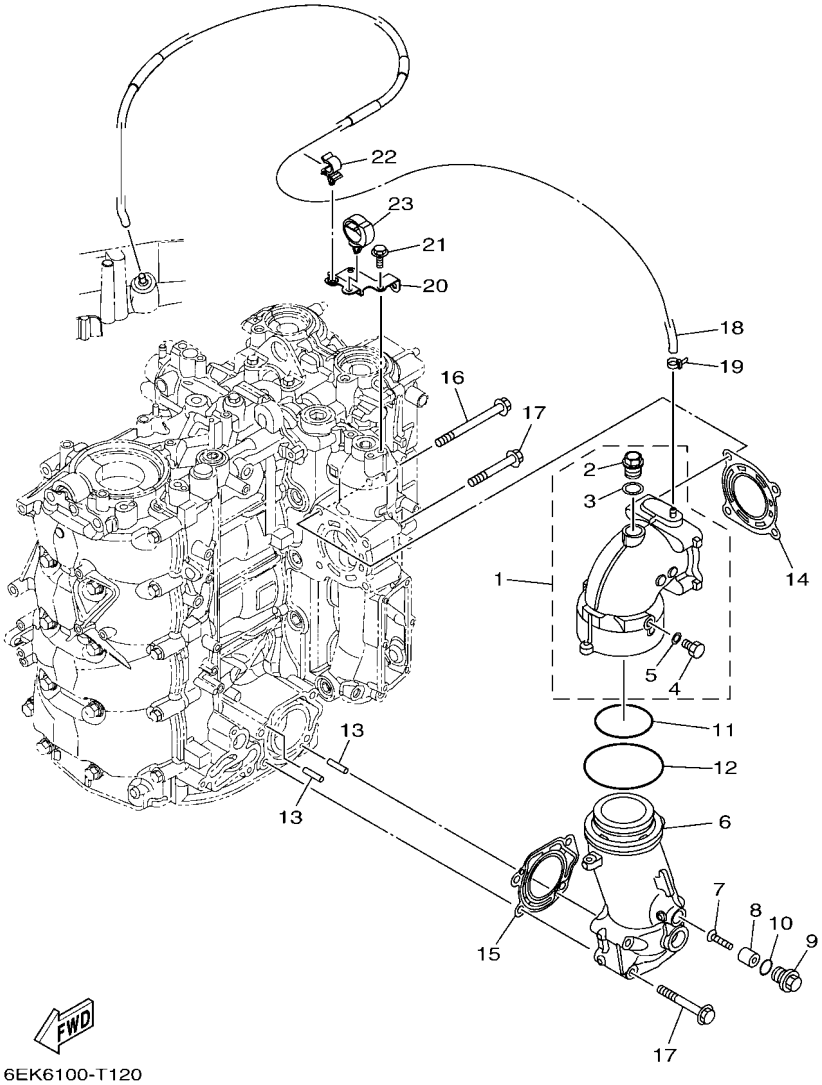

FIG. 12 EXHAUST

REF. NO.	PART NO.	DESCRIPTION	LA	XA				REMARKS
1	6EK–14615–10	JOINT, EXHAUST 1	1	1				
2	90340–18M09	.PLUG, STRAIGHT SCREW	1	1				
3	90201–186F1	.WASHER, PLATE	1	1				
4	97D95–08014	.BOLT, HEXAGON DEEP RECESS	1	1				
5	90430–08143	.GASKET	1	1				
6	6EK–14625–00	JOINT, EXHAUST 2	1	1				
7	98780–05025	SCREW, FLAT HEAD	1	1				
8	6EK–11325–00	ANODE	1	1				
9	6G8–11197–A0	PLUG, BLIND	1	1				
10	93210–13M63	O-RING	1	1				
11	93210–64001	O-RING	1	1				
12	93210–84001	O-RING	1	1				
13	91690–50014	PIN, SPRING	2	2				
14	6EK–41114–00	GASKET, EXHAUST OUTER COVER	1	1				
15	6EK–41124–00	GASKET, EXHAUST OUTER COVER	1	1				
16	90105–08247	BOLT, FLANGE	2	2				
17	90105–08220	BOLT, FLANGE	6	6				
18	6EM–42542–00	PIPE	1	1				
19	90465–11M10	CLAMP	1	1				
20	6EK–82398–00	PLATE 3	1	1				
21	95D95–06012	BOLT, FLANGE DEEP RECESS	2	2				
22	90464–09129	CLAMP	1	1				
23	90464–12183	CLAMP	1	1				

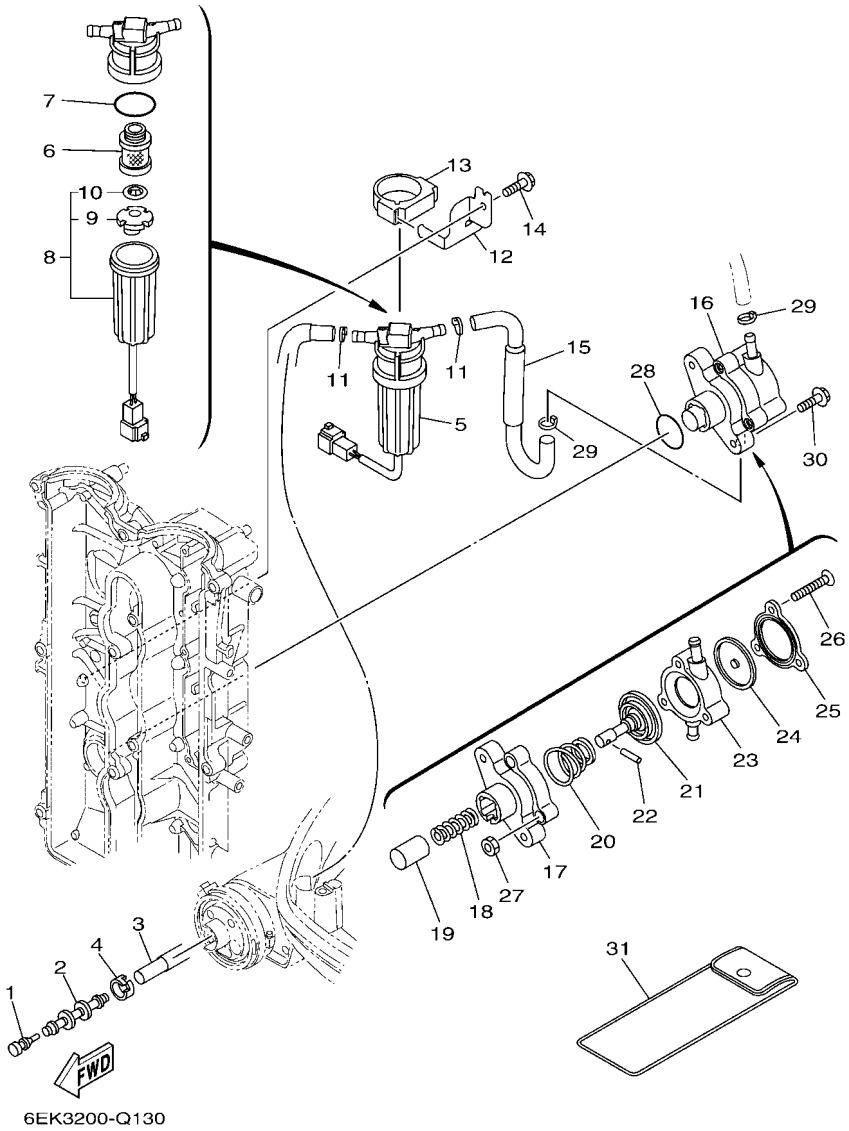

FIG. 13 FUEL 1

REF. NO.	PART NO.	DESCRIPTION	LA	XA				REMARKS
1	689–85547–00	DAMPER	1	1				
2	6AW–24377–01	PIPE, JOINT 2	1	1				
3	6EK–24314–00	PIPE 4	1	1				
4	6E5–24351–51	BAND 1	1	1				
5	6EK–24560–00	FILTER ASSY	1	1				
6	6D8–24563–00	.ELEMENT, FILTER	1	1				
7	6D8–24564–00	.GASKET	1	1				
8	6D8–24562–00	.CUP, FILTER	1	1				
9	6D8–24469–00	..FLOAT, WATER LEVEL	1	1				
10	6D8–24519–00	..CLIP	1	1				
11	90465–11M10	CLAMP	2	2				
12	6EK–24566–00	BRACKET, FILTER	1	1				
13	6EK–24568–00	BAND, FILTER	1	1				
14	95D95–06016	BOLT, FLANGE DEEP RECESS	1	1				
15	6EK–24311–00	PIPE, FUEL 1	1	1				
16	6EK–24410–00	FUEL PUMP ASSY	1	1				
17	68V–24412–00	.BODY 1	1	1				
18	68V–24454–00	.SPRING	1	1				
19	63P–13131–00	.PLUNGER	1	1				
20	63P–24423–00	.SPRING, DIAPHRAGM	1	1				
21	68V–24411–00	.DIAPHRAGM	1	1				
22	68V–24374–00	.PIN	1	1				
23	6EK–24413–00	.BODY 2	1	1				
24	68V–24471–10	.DIAPHRAGM	1	1				
25	6EK–24414–00	.BODY 3	1	1				
26	68V–24444–00	.SCREW	3	3				
27	68V–24149–00	.NUT	3	3				

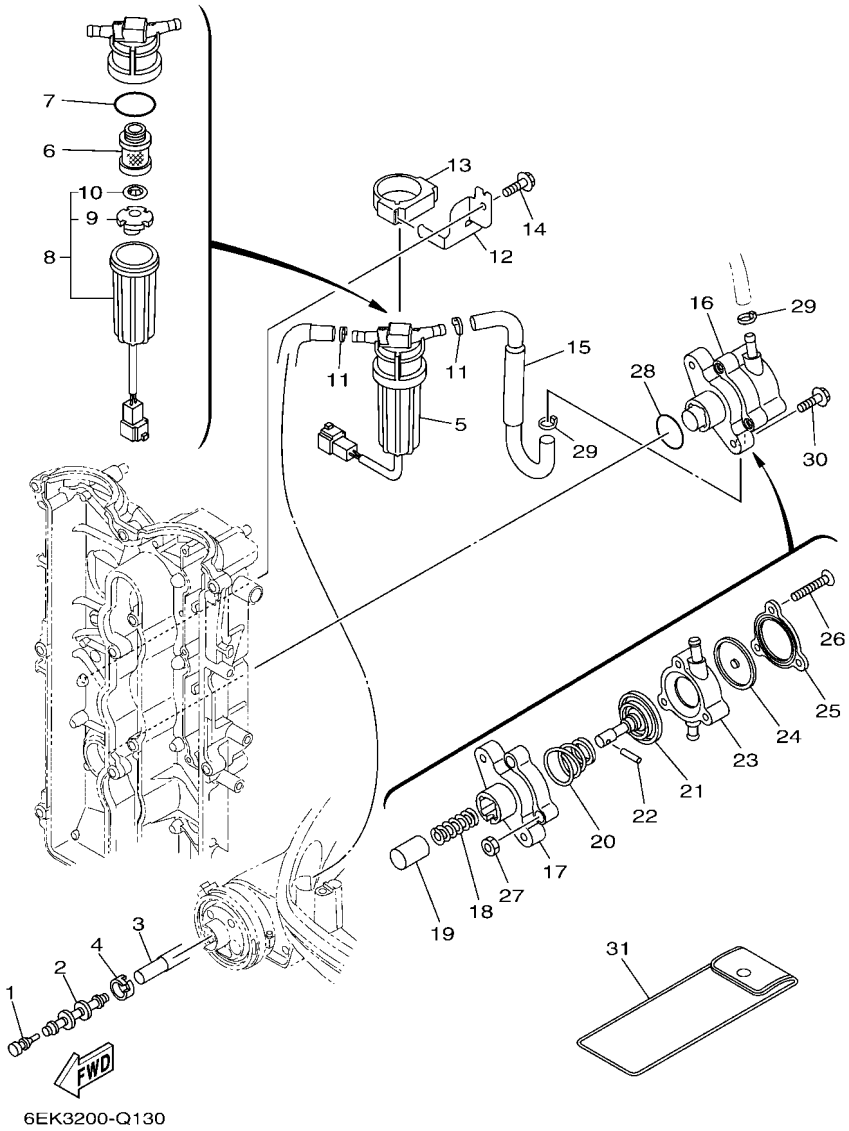

FIG. 13 FUEL 1

REF. NO.	PART NO.	DESCRIPTION	LA	XA				REMARKS
28	93210–30682	O-RING	1	1				
29	90465–11M10	CLAMP	2	2				
30	90105–06208	BOLT, FLANGE	2	2				
31	67F–28100–02	TOOL KIT	1	1				AP

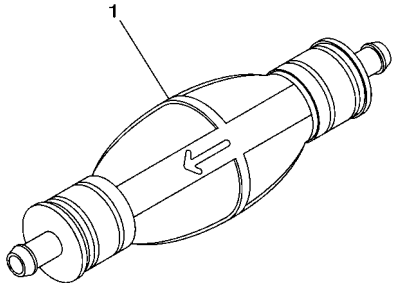

68VC100-L120

FIG. 14 FUEL 2

REF. NO.	PART NO.	DESCRIPTION	LA	XA				REMARKS
1	6YK–24360–73	PRIMER PUMP ASSY	1	1				AP

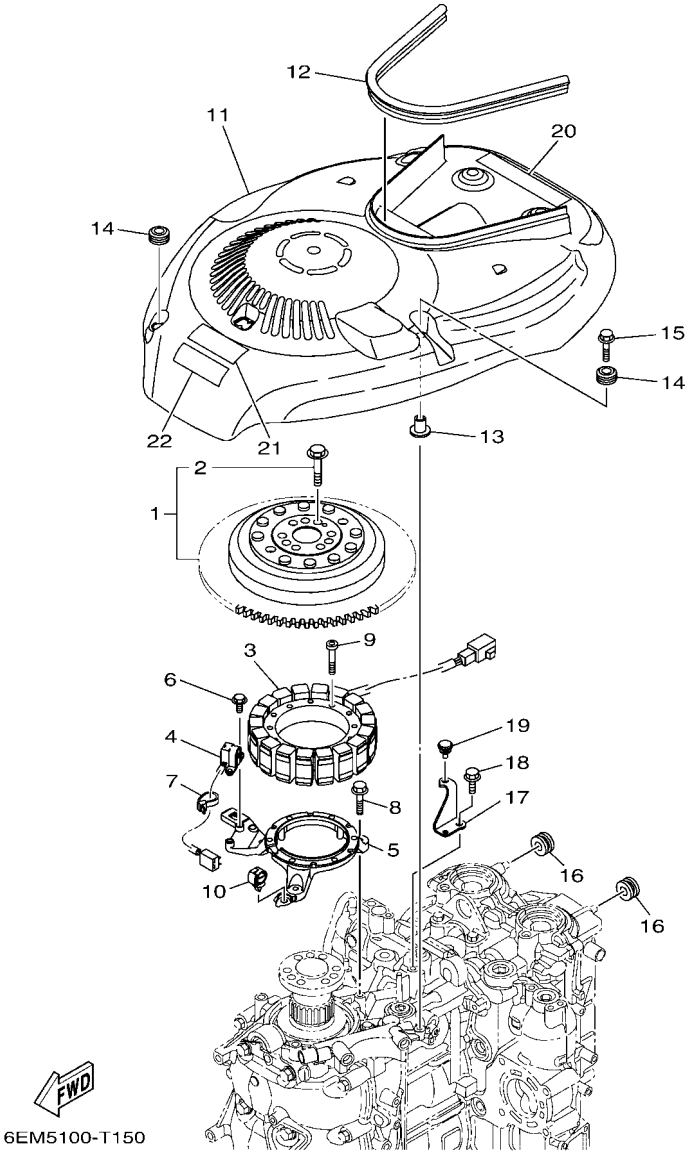

FIG. 15 GENERATOR

REF. NO.	PART NO.	DESCRIPTION	LA	XA				REMARKS
1	6EK–W8145–01	ROTOR ASSY WITH BOLTS	1	1				
2	6EK–W9010–00	.BOLT SET	1	1				
3	6EK–81410–00	STATOR ASSY	1	1				
4	6CB–85580–00	COIL, PULSER	1	1				
5	6EK–85561–00	BASE, MAGNETO	1	1				
6	97595–05516	BOLT, WITH WASHER	2	2				
7	90465–13M97	CLAMP	1	1				
8	95D95–06030	BOLT, FLANGE DEEP RECESS	3	3				
9	91312–06035	BOLT, HEXAGON SOCKET HEAD	6	6				
10	90464–13249	CLAMP	1	1				
11	6EK–81337–00	COVER, FLYWHEEL	1	1				
12	6EK–42617–00	DAMPER, FORM	1	1				
13	90387–06119	COLLAR	1	1				
14	6A0–82317–00	DAMPER, IGNITION COIL	2	2				
15	95D95–06030	BOLT, FLANGE DEEP RECESS	1	1				
16	90480–12314	GROMMET	2	2				
17	6EK–8132G–00	PLATE	1	1				
18	95D95–06016	BOLT, FLANGE DEEP RECESS	1	1				
19	90480–06M19	GROMMET	1	1				
20	6EK–13437–61	MARK, CAUTION	1	1				
21	6EE–81994–40	LABEL, SAFETY	1	1				
22	6EE–81994–50	LABEL, SAFETY	1	1				

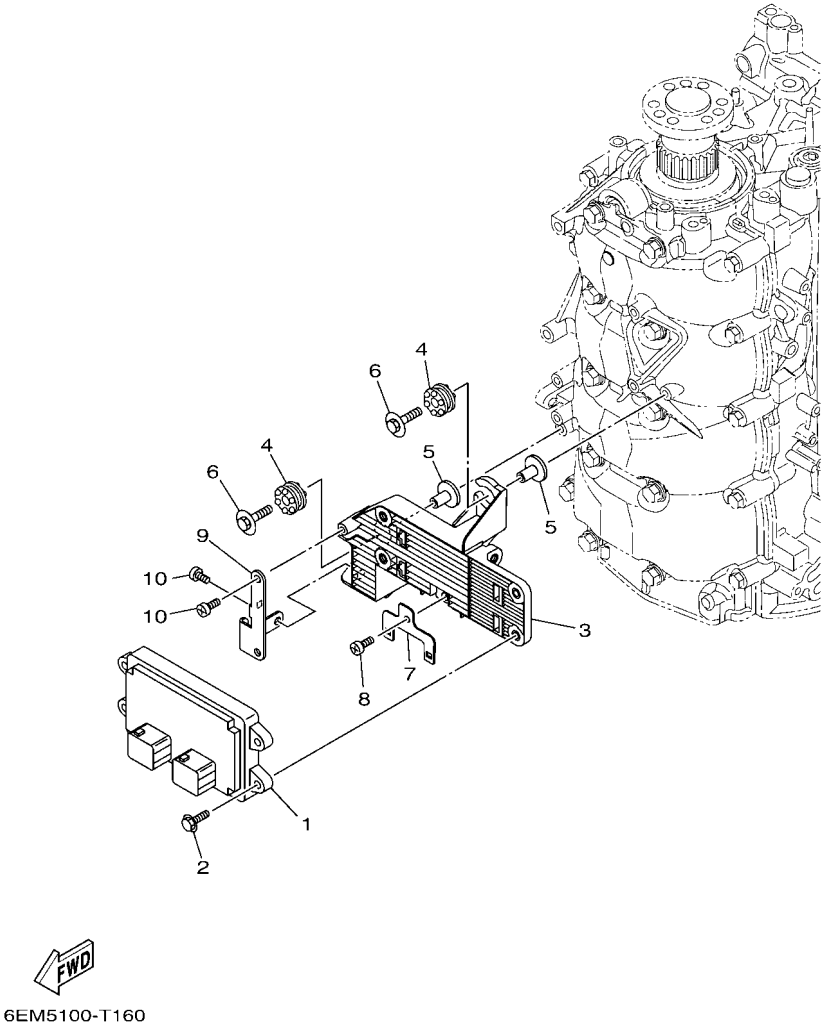

FIG. 16 ELECTRICAL 1

REF. NO.	PART NO.	DESCRIPTION	LA	XA				REMARKS
1	6EM–8591A–10	ENGINE CONTROL UNIT ASSY	1	1				
2	97E95–06520	BOLT, HEXAGON W/W DEEP RECESS	4	4				
3	6EM–81948–01	BRACKET	1	1				
4	60V–85564–00	GROMMET	2	2				
5	90387–06176	COLLAR	2	2				
6	68F–85119–00	BOLT	2	2				
7	6C5–8257V–00	PLATE, CONNECTOR	1	1				
8	97780–60620	SCREW, TAPPING	1	1				
9	6EK–85548–00	HOLDER	1	1				
10	97780–60620	SCREW, TAPPING	2	2				

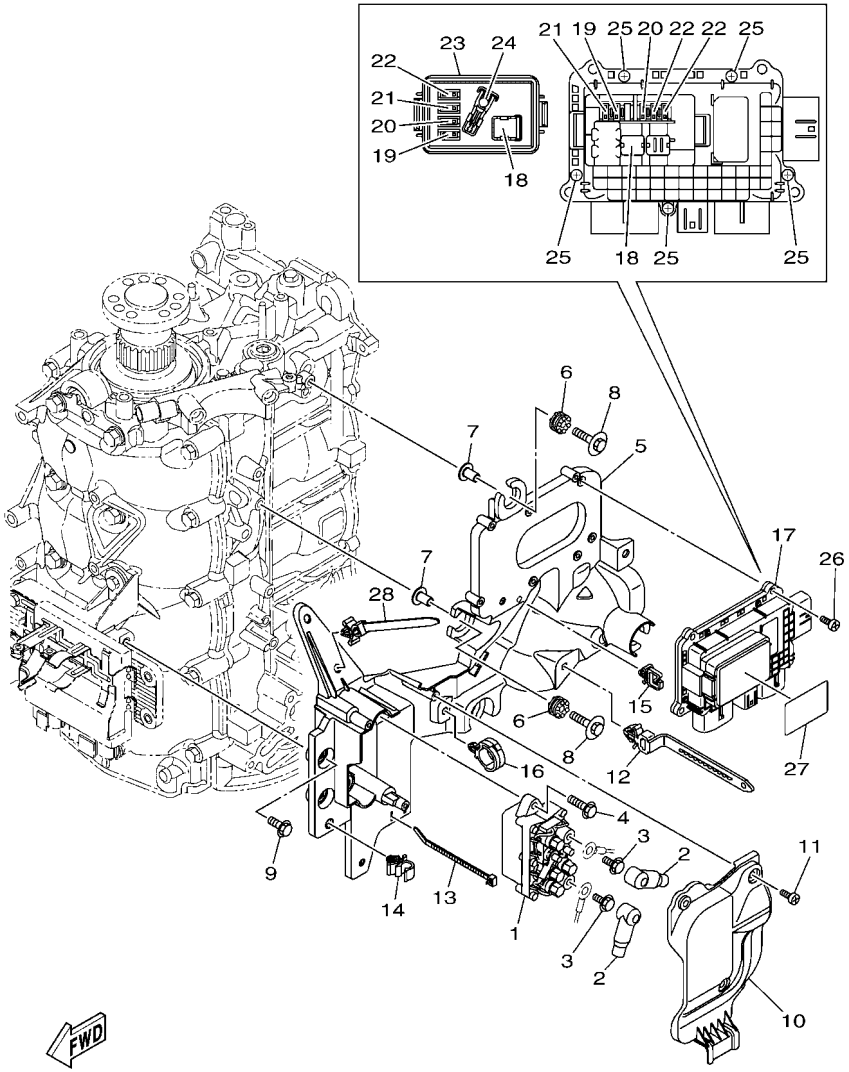

FIG. 17 ELECTRICAL 2

REF. NO.	PART NO.	DESCRIPTION	LA	XA				REMARKS
1	63P–81950–00	RELAY ASSY	1	1				
2	682–82119–01	COVER, LEAD WIRE	2	2				
3	97E95–06610	BOLT, HEXAGON W/W DEEP RECESS	2	2				
4	97E95–06520	BOLT, HEXAGON W/W DEEP RECESS	2	2				
5	6EK–81952–10	HOLDER, RELAY	1	1				
6	60V–85564–00	GROMMET	4	4				
7	90387–06176	COLLAR	4	4				
8	68F–85119–00	BOLT	4	4				
9	95D95–06016	BOLT, FLANGE DEEP RECESS	2	2				
10	6EK–81942–10	COVER	1	1				
11	90169–05M00	SCREW, TRUSS HEAD TAPPING	3	3				
12	90465–13M76	CLAMP	1	1				
13	90465–11M52	CLAMP	1	1				
14	90464–10M32	CLAMP	1	1				
15	90464–08004	CLAMP	1	1				
16	90464–12183	CLAMP	1	1				
17	6EM–82170–10	FUSE BOX ASSY	1	1				
18	6FP–82151–00	.FUSE (50A)	2	2				
19	6CB–82151–00	.FUSE (10A)	2	2				
20	6CB–82151–10	.FUSE (15A)	2	2				
21	6CB–82151–20	.FUSE (20A)	2	2				
22	6CB–82151–30	.FUSE (30A)	3	3				
23	6CB–85544–10	.COVER	1	1				
24	6CB–2812A–00	.PULLER, FUSE	1	1				
25	6P2–82113–00	.SCREW (M3)	5	5				
26	97780–50620	SCREW, TAPPING	4	4				
27	6EM–81919–10	GRAPHIC, REGULATOR	1	1				

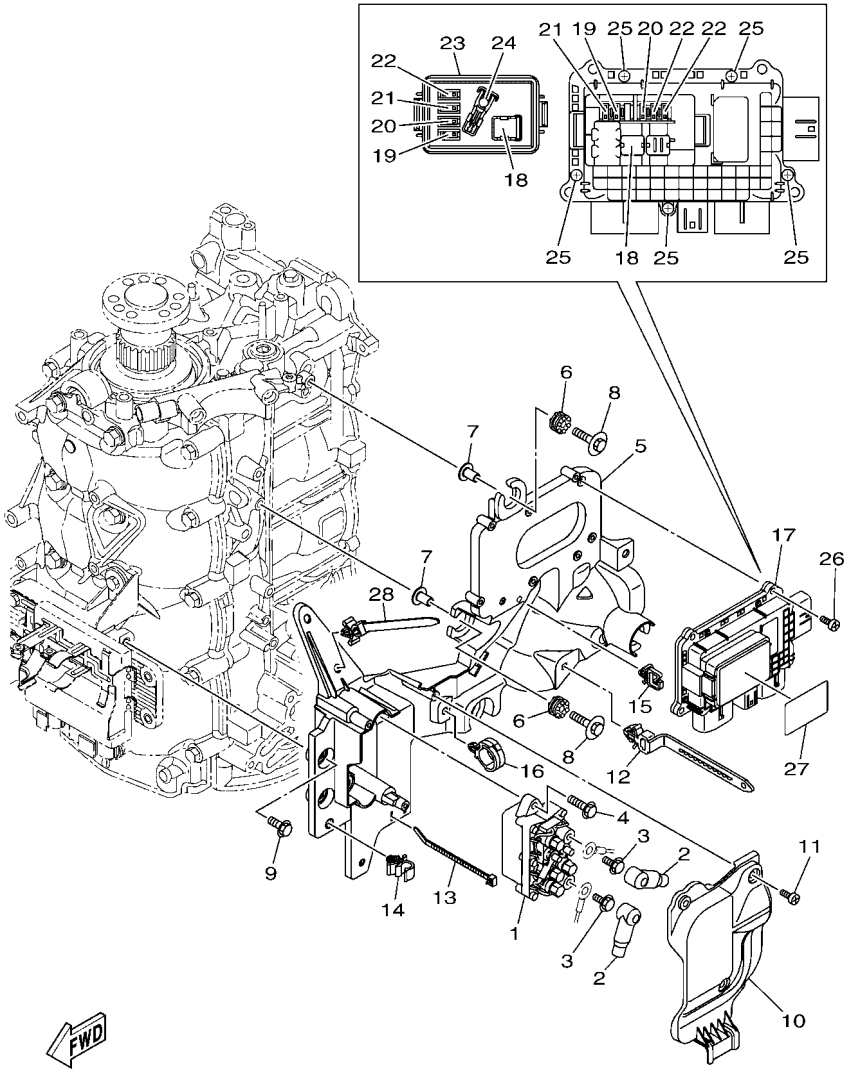

FIG. 17 ELECTRICAL 2

REF. NO.	PART NO.	DESCRIPTION	LA	XA				REMARKS
28	90465–12M56	CLAMP	1	1				

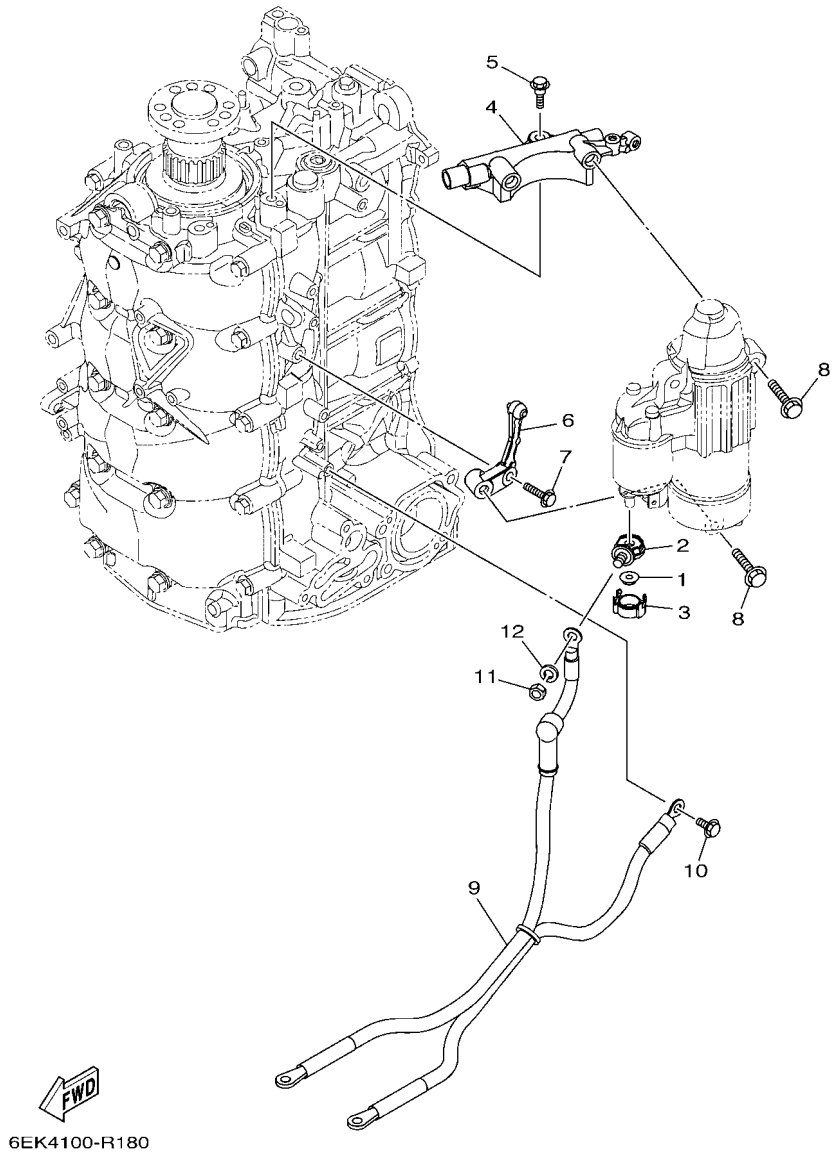

FIG. 18 ELECTRICAL 3

REF. NO.	PART NO.	DESCRIPTION	LA	XA				REMARKS
1	90179–08003	NUT	1	1				
2	60V–81925–00	TERMINAL	1	1				
3	68F–82582–00	CAP,1	1	1				
4	6EK–81822–01	BRACKET, STARTING MOTOR	1	1				
5	90109–08240	BOLT	2	2				
6	6EK–81823–00	STAY, STARTING MOTOR	1	1				
7	95812–08030	BOLT, FLANGE	1	1				
8	90105–08248	BOLT, FLANGE	3	3				
9	68V–82105–01	BATTERY CABLE	1	1				AP
10	90105–06M14	BOLT FLANGE	1	1				AP
11	95333–08600	NUT	1	1				AP
12	92903–08100	WASHER, SPRING	1	1				AP

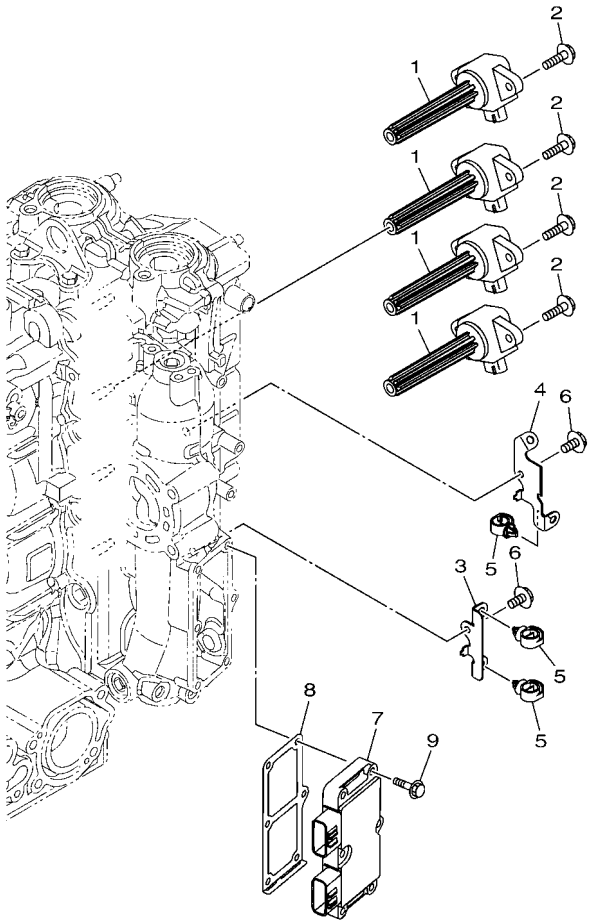

6FN3100-R190

FIG. 19 ELECTRICAL 4

REF. NO.	PART NO.	DESCRIPTION	LA	XA				REMARKS
1	6P2–82310–01	IGNITION COIL ASSY	4	4				
2	95D95–06020	BOLT, FLANGE DEEP RECESS	8	8				
3	6EM–82388–00	PLATE	1	1				
4	6EM–82389–00	PLATE 2	1	1				
5	90464–13249	CLAMP	3	3				
6	95D95–06012	BOLT, FLANGE DEEP RECESS	2	2				
7	6EK–81960–10	RECTIFIER & REGULATOR ASSY	1	1				
8	6EK–81975–01	PLATE, RECTIFIER FITTING	1	1				
9	97E95–06530	BOLT, HEXAGON W/W DEEP RECESS	6	6				

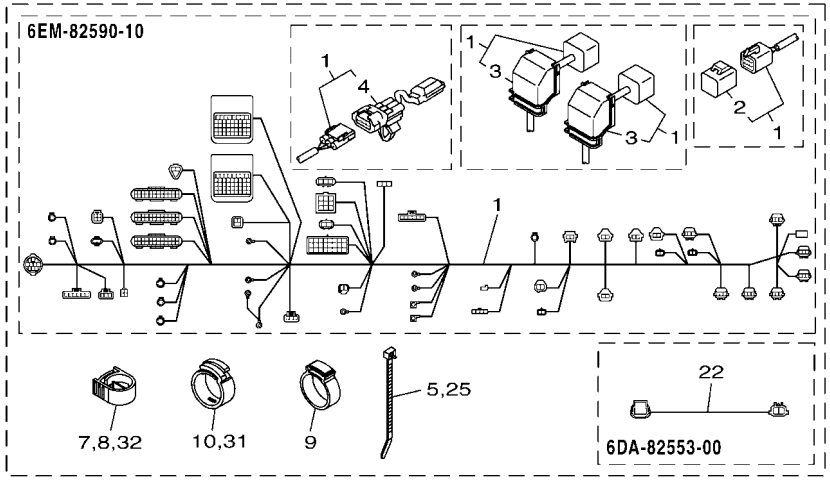

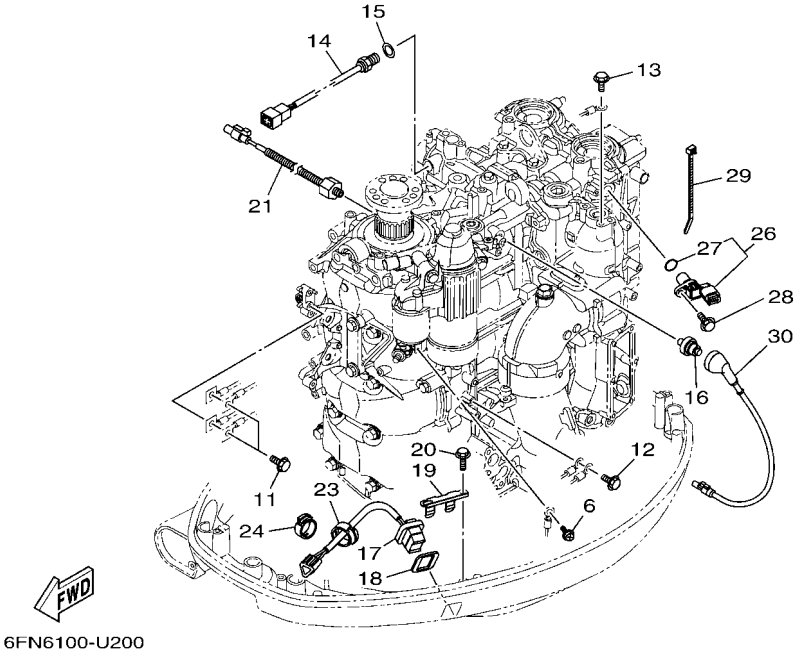

FIG. 20 ELECTRICAL 5

REF. NO.	PART NO.	DESCRIPTION	LA	XA				REMARKS
1	6EM–82590–10	WIRE HARNESS ASSY	1	1				
2	6Y8–82582–11	.CAP 1 (4PIN)	1	1				
3	6EM–82599–00	.COVER, CONNECTOR	2	2				
4	6EK–81980–00	.DIODE ASSY	1	1				
5	90465–13M18	CLAMP	1	1				
6	97985–04308	SCREW, WITH WASHER	1	1				
7	90464–18004	CLAMP	1	1				
8	90464–18004	CLAMP	1	1				
9	90464–26001	CLAMP	1	1				
10	90464–16001	CLAMP	1	1				
11	97E95–06516	BOLT, HEXAGON W/W DEEP RECESS	2	2				
12	97E95–06516	BOLT, HEXAGON W/W DEEP RECESS	1	1				
13	97E95–06512	BOLT, HEXAGON W/W DEEP RECESS	1	1				
14	6CJ–85790–00	THERMOSENSOR ASSY	1	1				
15	90430–14115	GASKET	1	1				
16	68V–82504–00	OIL PRESSURE SWITCH ASSY	1	1				
17	69J–82563–01	TRIM & TILT SWITCH ASSY	1	1				
18	69J–82587–00	GASKET	1	1				
19	69J–83614–00	BRACKET	1	1				
20	90109–06M86	BOLT	2	2				
21	6CJ–85780–00	SENSOR, KNOCK	1	1				
22	6DA–82553–00	EXTENSION, WIRE LEAD	1	1				
23	90464–16001	CLAMP	1	1				
24	90464–16001	CLAMP	1	1				
25	90465–13M18	CLAMP	1	1				
26	6P2–85896–00	SENSOR, CAM POSITION	1	1				
27	6P2–85075–00	.O-RING	1	1				

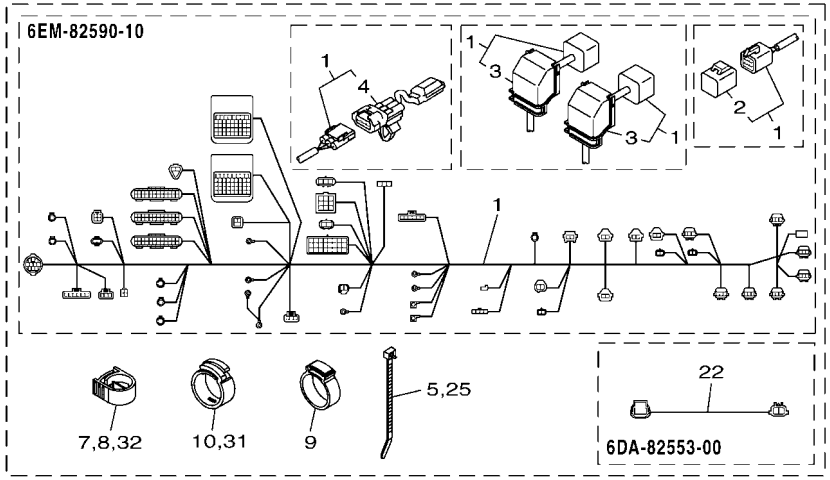

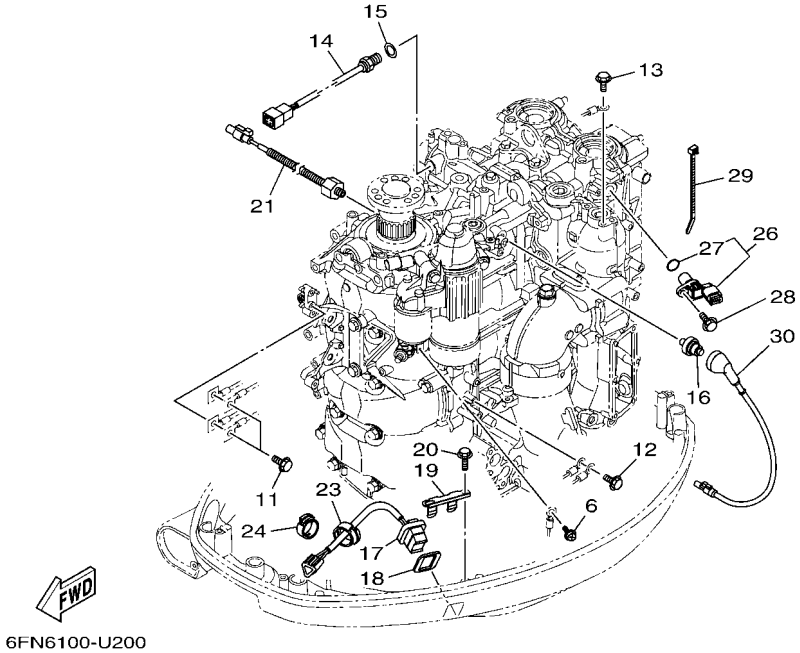

FIG. 20 ELECTRICAL 5

REF. NO.	PART NO.	DESCRIPTION	LA	XA				REMARKS
28	95D95–06016	BOLT, FLANGE DEEP RECESS	1	1				
29	90465–11M59	CLAMP	1	1				
30	6EK–82553–10	EXTENSION, WIRE LEAD	1	1				
31	90464–16001	CLAMP	1	1				
32	90464–18004	CLAMP	1	1				

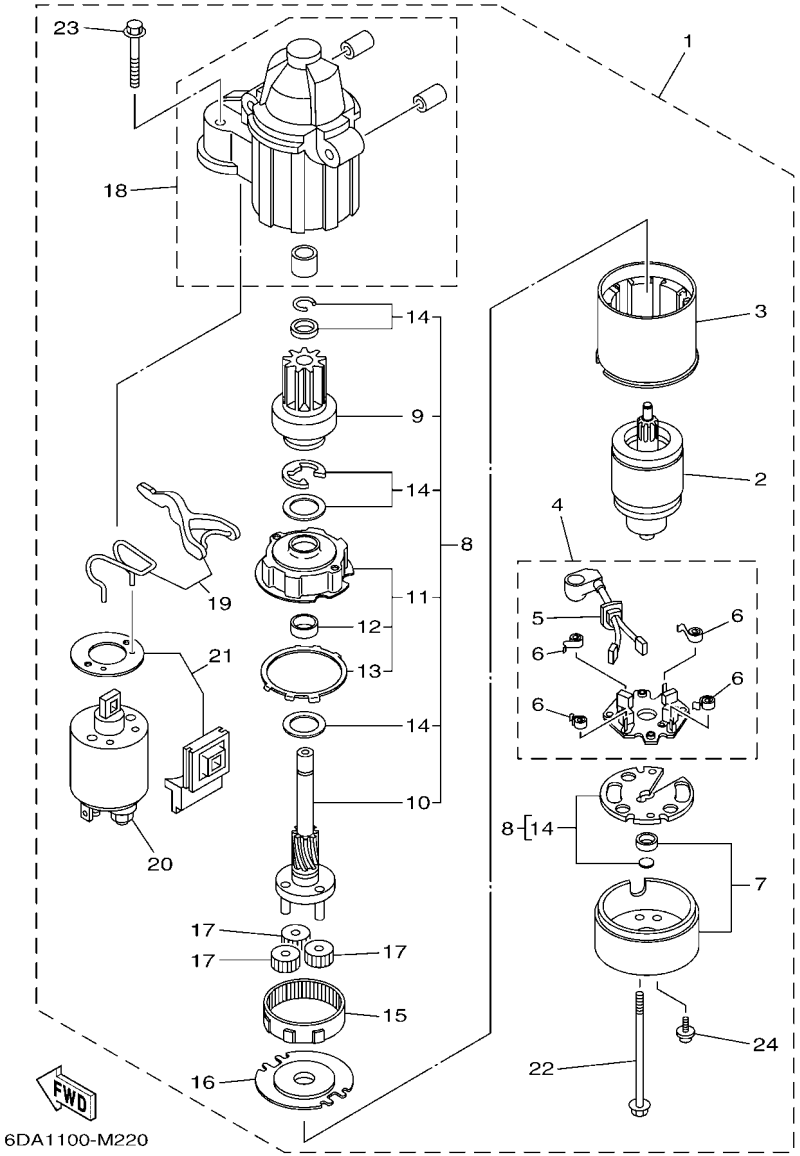

FIG. 21 STARTING MOTOR

REF. NO.	PART NO.	DESCRIPTION	LA	XA				REMARKS
1	6EM–81800–01	STARTING MOTOR ASSY	1	1				
2	67F–81850–00	.ARMATURE ASSY	1	1				
3	67F–81810–00	.STATOR ASSY	1	1				
4	69J–81840–11	.BRUSH HOLDER ASSY	1	1				
5	69J–81801–11	..BRUSH SET	1	1				
6	67F–81813–00	..SPRING, BRUSH	4	4				
7	6CB–81820–00	.REAR BRACKET ASSY	1	1				
8	6CB–81807–00	.GEAR ASSY, STARTING MOTOR	1	1				
9	6CB–81832–00	..CLUTCH, OVER RUN	1	1				
10	6CB–81836–00	..SHAFT, PINION	1	1				
11	67F–81821–00	..BRACKET, CENTER 1	1	1				
12	67F–81841–00	...BEARING	1	1				
13	67F–8183R–00	...GASKET	1	1				
14	6CB–81809–00	..WASHER KIT	1	1				
15	67F–81891–00	.GEAR, RING	1	1				WITH 67F-8183R-00
16	67F–81830–00	.BRACKET, CENTER 2	1	1				
17	60V–8183T–00	.GEAR, IDLER	3	3				
18	6CB–81842–00	.COVER	1	1				
19	6C5–81839–00	.LEVER ASSY	1	1				
20	6EM–81941–00	.STARTER RELAY ASSY	1	1				
21	6C5–81869–00	.COVER, DUST	1	1				
22	6CB–81826–00	.BOLT	2	2				
23	69J–81828–00	.BOLT 2	2	2				
24	67F–81846–00	.SCREW	2	2				

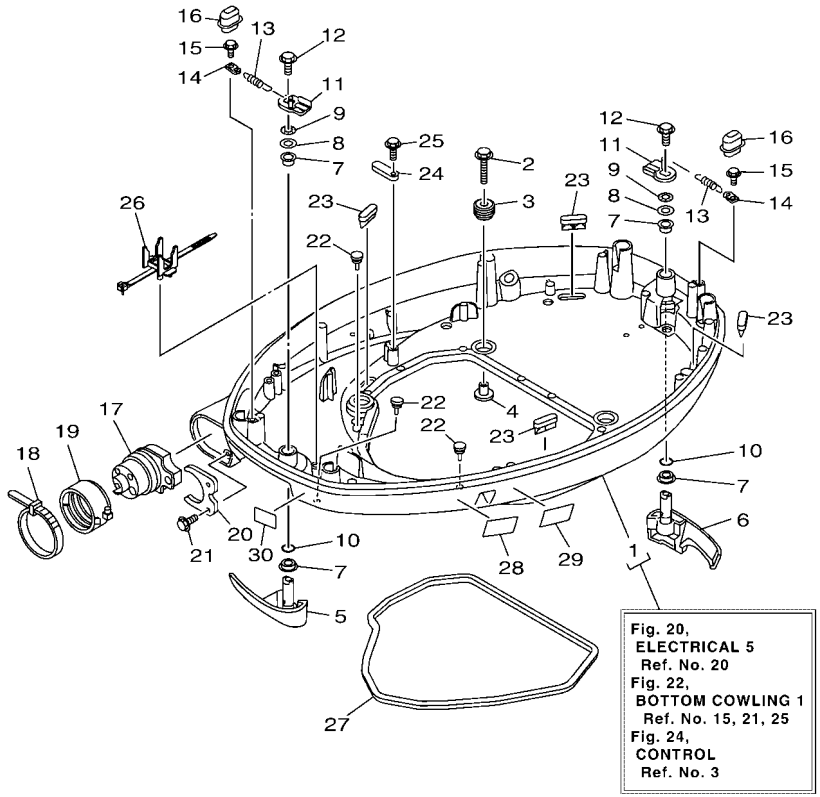

6KM1100-U220

FIG. 22 BOTTOM COWLING 1

REF. NO.	PART NO.	DESCRIPTION	LA	XA				REMARKS
1	6EK–42710–01	BOTTOM COWLING ASSY	1	1				
2	90119–08187	BOLT, WITH WASHER	4	4				
3	90480–22M15	GROMMET	4	4				
4	90387–08M37	COLLAR	4	4				
5	6EK–42815–01–8D	LEVER, CLAMP 1	1	1				
6	6EK–42816–01–8D	LEVER, CLAMP 2	1	1				
7	90386–15M73	BUSH	4	4				
8	90201–156J2	WASHER, PLATE	2	2				
9	90206–15M18	WASHER, WAVE	2	2				
10	93210–13M63	O-RING	2	2				
11	6CB–42818–00	LEVER, CLAMP 4	2	2				
12	95D95–08012	BOLT, FLANGE DEEP RECESS	2	2				
13	90506–22001	SPRING, TENSION	2	2				
14	66T–43144–00	HOOK, SPRING	2	2				
15	90109–06M86	BOLT	2	2				
16	6EK–42728–00	CAP	2	2				
17	6EK–42725–00	GROMMET	1	1				
18	90464–20258	CLAMP	1	1				AP
19	68F–42753–00	FASTNER	1	1				AP
20	6CB–42761–00	STOPPER	1	1				
21	90109–06316	BOLT	2	2				
22	6H4–42748–00	GROMMET	3	3				
23	67F–42717–00	RUBBER, SEAL 2	4	4				
24	6E5–82588–00	PLATE	1	1				
25	90109–06M81	BOLT	1	1				
26	688–82594–00	CLAMP	1	1				
27	6EK–42716–00	RUBBER SEAL 1	1	1				

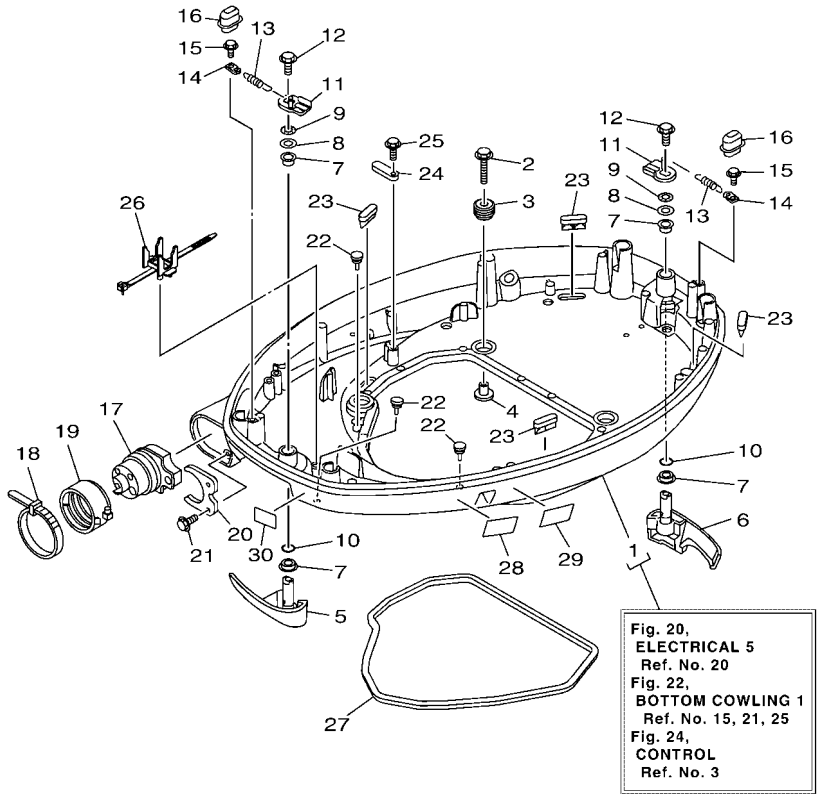

6KM1100-U220

FIG. 22 BOTTOM COWLING 1

REF. NO.	PART NO.	DESCRIPTION	LA	XA				REMARKS
28	6EE–42794–40	LABEL, WARNING (GENERAL)	1	1				
29	6EE–42794–50	LABEL, WARNING (GENERAL)	1	1				
30	6AH–81996–00	MARK	1	1				

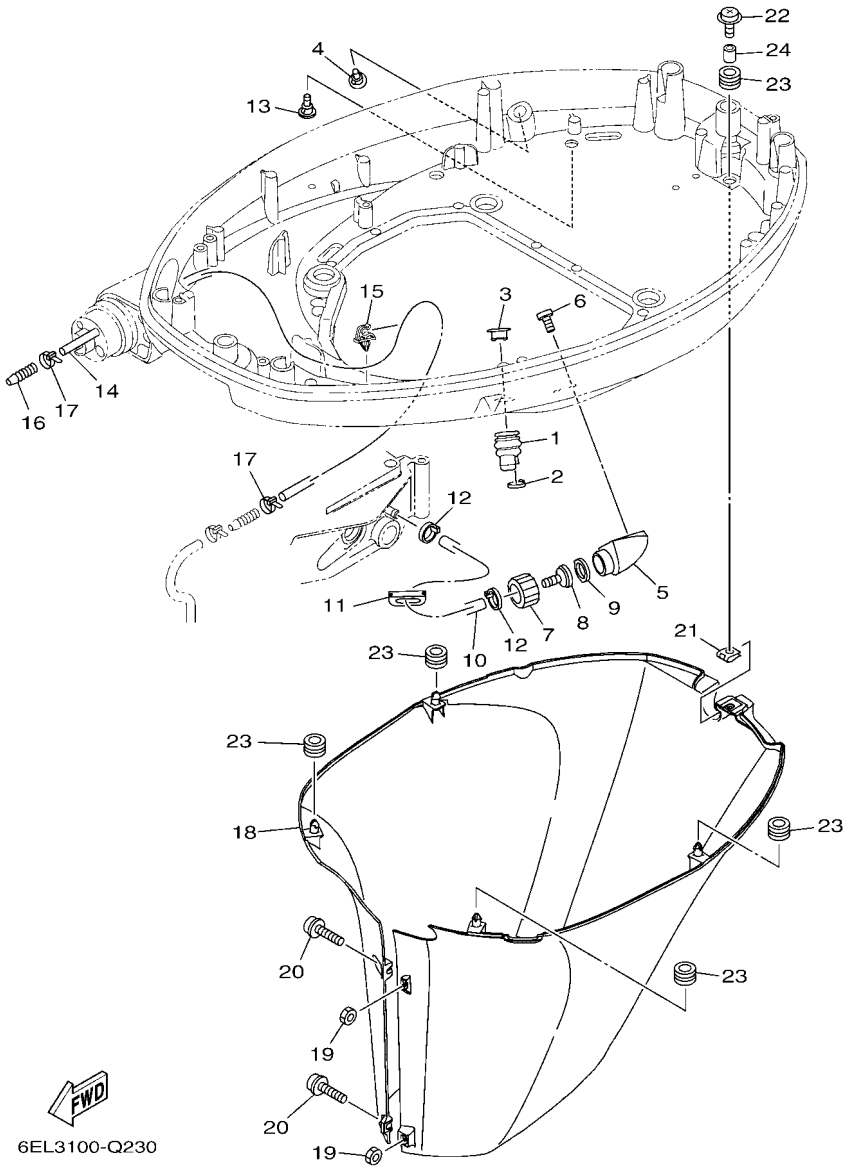

FIG. 23 BOTTOM COWLING 2

REF. NO.	PART NO.	DESCRIPTION	LA	XA				REMARKS
1	6H1–42726–30	GROMMET	1	1				
2	90465–11M10	CLAMP	1	1				
3	6BG–42384–00	SEAL, CAP	1	1				
4	6P2–44391–00	NIPPLE, HOSE	1	1				
5	6AW–12572–00	ADAPTER	1	1				
6	97780–60520	SCREW, TAPPING	2	2				
7	6R3–12581–00	JOINT, HOSE 1	1	1				
8	6R3–12582–00	JOINT, HOSE 2	1	1				
9	6R3–12583–00	GASKET, HOSE JOINT	1	1				
10	6EK–42541–00	PIPE 1	1	1				
11	6AH–42726–00	GROMMET	1	1				
12	90465–11M10	CLAMP	2	2				
13	6P2–44391–00	NIPPLE, HOSE	1	1				
14	90445–073F9	HOSE (L1200)	1	1				
15	90464–07259	CLAMP	1	1				
16	6E5–83558–00	END, NIPPLE	1	1				
17	90465–11M10	CLAMP	2	2				
18	6EK–42741–00–8D	APRON	1	1				
19	95380–06600	NUT, HEXAGON	2	2				
20	90159–06M28	SCREW, WITH WASHER	2	2				
21	90183–061A8	NUT, SPRING	1	1				
22	90159–06053	SCREW, WITH WASHER	1	1				
23	90480–13M24	GROMMET	5	5				
24	90387–06M43	COLLAR	1	1				

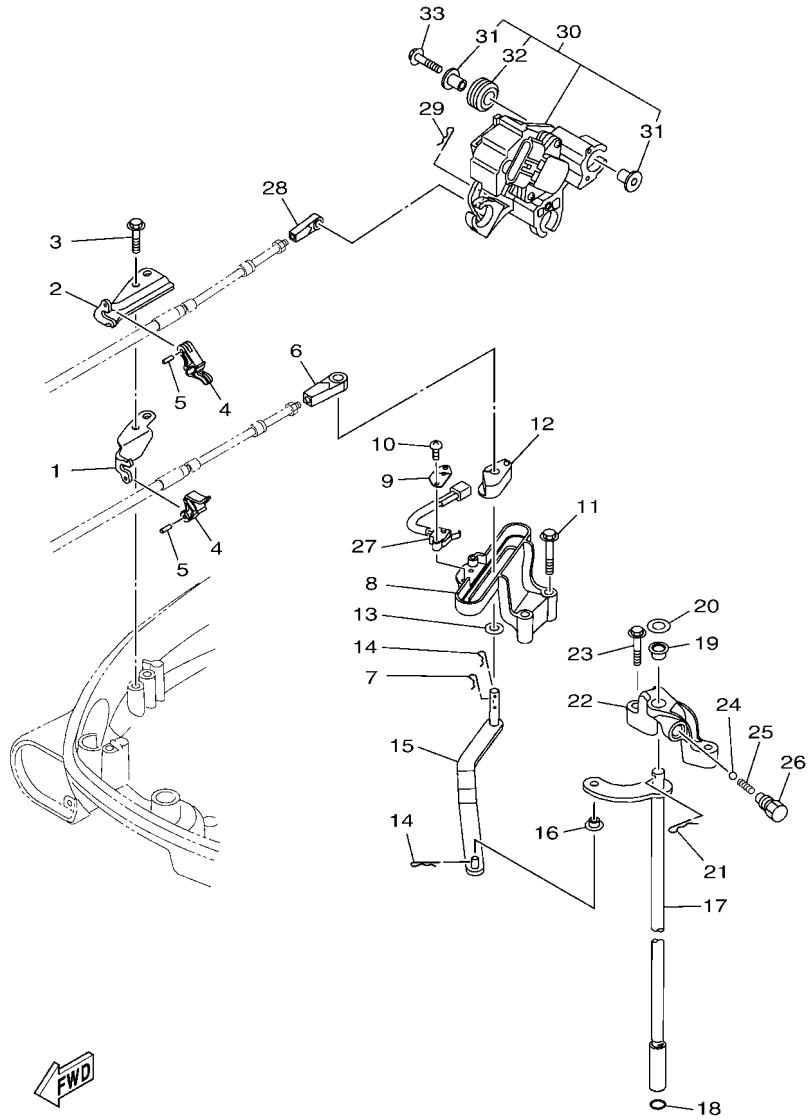

6FN3100-R240

FIG. 24 CONTROL

REF. NO.	PART NO.	DESCRIPTION	LA	XA				REMARKS
1	6EK–48531–01	BRACKET, REMOTE CONTROL 1	1	1				
2	6EK–48532–00	BRACKET, REMOTE CONTROL 2	1	1				
3	90109–06M81	BOLT	2	2				
4	6EK–48538–00	CLAMP, CABLE 1	2	2				
5	91690–30010	PIN, SPRING	2	2				
6	6E5–48344–00	CABLE END, REMOTE CONTROL	1	1				
7	90468–18008	CLIP	1	1				
8	6EK–44117–01	BRACKET	1	1				
9	61A–82588–01	PLATE	1	1				
10	97985–04116	SCREW, WITH WASHER	2	2				
11	95D75–06040	BOLT, FLANGE DEEP RECESS	2	2				
12	63P–44122–00	BUSHING, SHIFT ROD LEVER	1	1				
13	90202–08M20	WASHER, PLATE	1	1				
14	90468–18008	CLIP	2	2				
15	6EK–44121–00	LEVER, SHIFT ROD	1	1				
16	90386–06M12	BUSH	1	1				
17	6EK–44120–01	HANDLE GEAR SHIFT ASSY	1					L(20.3")
	6EK–44120–11	HANDLE GEAR SHIFT ASSY		1				X(25.3")
18	93210–09165	O-RING	1	1				
19	90386–10001	BUSH	1	1				
20	90201–11008	WASHER, PLATE	1	1				
21	90468–180A0	CLIP	1	1				
22	6EK–44118–00	BRACKET	1	1				
23	95D95–06030	BOLT, FLANGE DEEP RECESS	2	2				
24	93501–04M02	BALL	1	1				
25	90501–12082	SPRING, COMPRESSION	1	1				
26	648–42715–00	BUSHING	1	1				

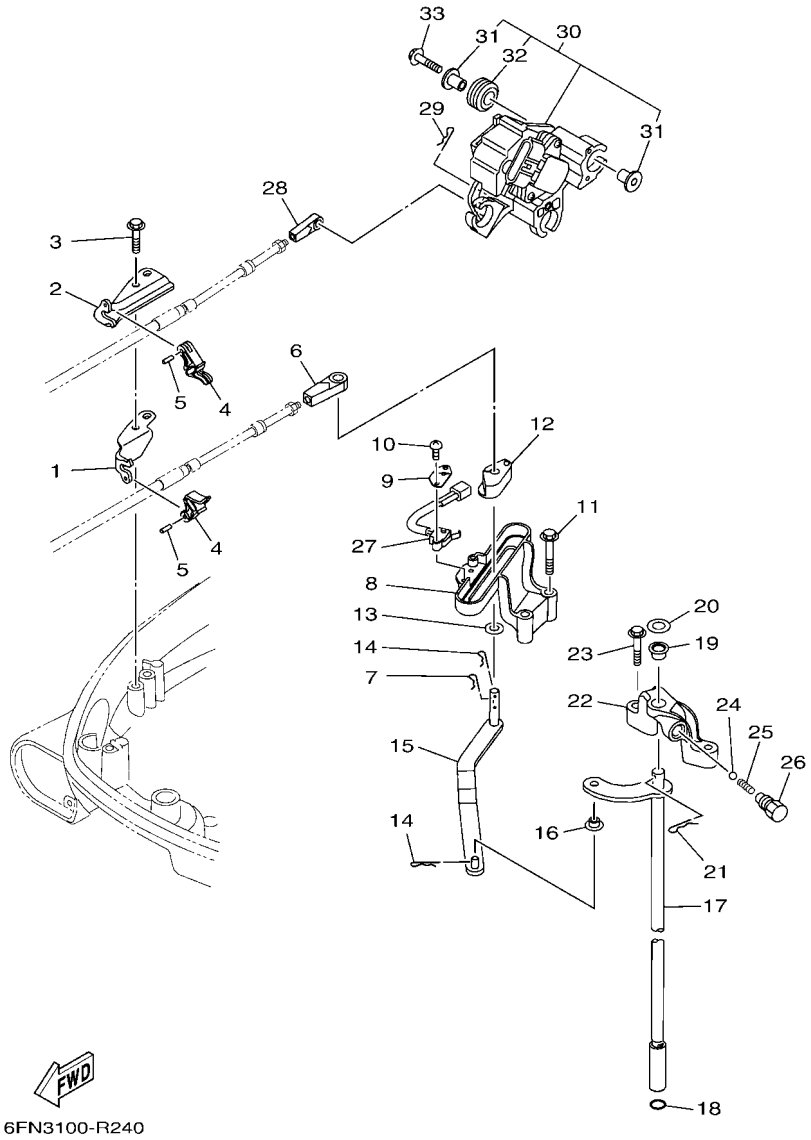

FIG. 24 CONTROL

REF. NO.	PART NO.	DESCRIPTION	LA	XA				REMARKS
27	60V–8259F–00	SWITCH ASSY	1	1				
28	6E5–48344–00	CABLE END, REMOTE CONTROL	1	1				
29	90468–18008	CLIP	1	1				
30	6EM–8A410–00	SENSOR UNIT	1	1				
31	69J–13716–00	.COLLAR	6	6				
32	6EM–13593–00	.DAMPER	3	3				
33	90119–06126	BOLT, WITH WASHER	3	3				

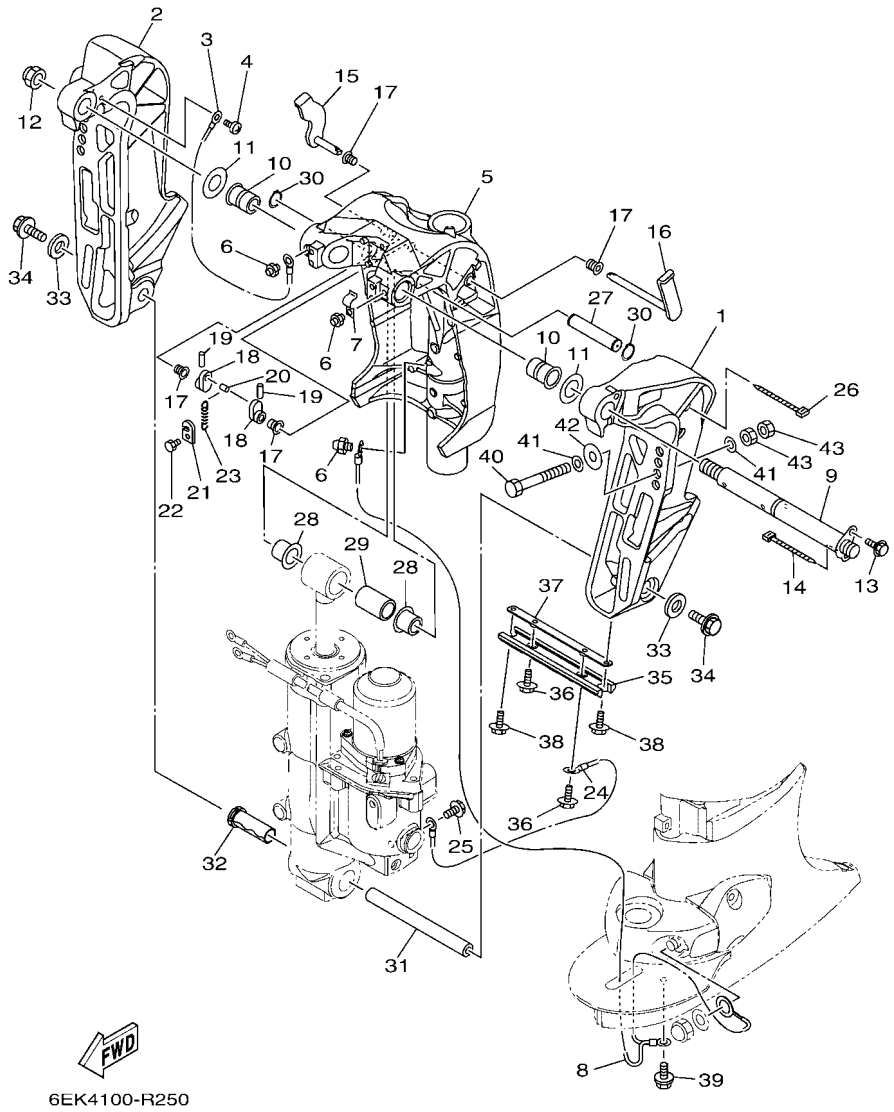

FIG. 25 BRACKET 1

REF. NO.	PART NO.	DESCRIPTION	LA	XA				REMARKS
1	6EK–43111–00–8D	BRACKET, CLAMP 1	1	1				
2	6EK–43112–00–8D	BRACKET, CLAMP 2	1	1				
3	6E5–82148–00	WIRE, LEAD 4	1	1				
4	97880–06012	SCREW, PAN HEAD	1	1				
5	6EK–43311–00–8D	BRACKET, SWIVEL 1	1					L(20.3")
	6EK–43311–10–8D	BRACKET, SWIVEL 1		1				X(25.3")
6	93700–06002	NIPPLE, GREASE	3	3				
7	90465–08M63	CLAMP	1	1				
8	66K–82149–00	WIRE, LEAD 3	1					L(20.3")
	68V–82149–30	WIRE, LEAD 3		1				X(25.3")
9	64E–43131–30	BOLT, CLAMP BRACKET	1	1				
10	90386–25M31	BUSH	2	2				
11	90201–26M59	WASHER, PLATE	2	2				
12	90185–22M11	NUT, SELF-LOCKING	1	1				
13	97E95–08520	BOLT, HEXAGON W/W DEEP RECESS	1	1				
14	90465–11M10	CLAMP	1	1				
15	6EK–43181–00	LEVER, TILT STOP 1	1	1				
16	6EK–43185–00	LEVER, TILT STOP 2	1	1				
17	90386–10M16	BUSH	4	4				
18	6G5–43148–00	COLLAR, DISTANCE	2	2				
19	91690–30020	PIN, SPRING	2	2				
20	90249–06M19	PIN	1	1				
21	66T–43144–00	HOOK, SPRING	1	1				
22	97D95–06010	BOLT, HEXAGON DEEP RECESS	1	1				
23	90506–14M24	SPRING, TENSION	1	1				
24	6D8–82148–00	WIRE, LEAD 4	1	1				
25	97E95–06510	BOLT, HEXAGON W/W DEEP RECESS	1	1				

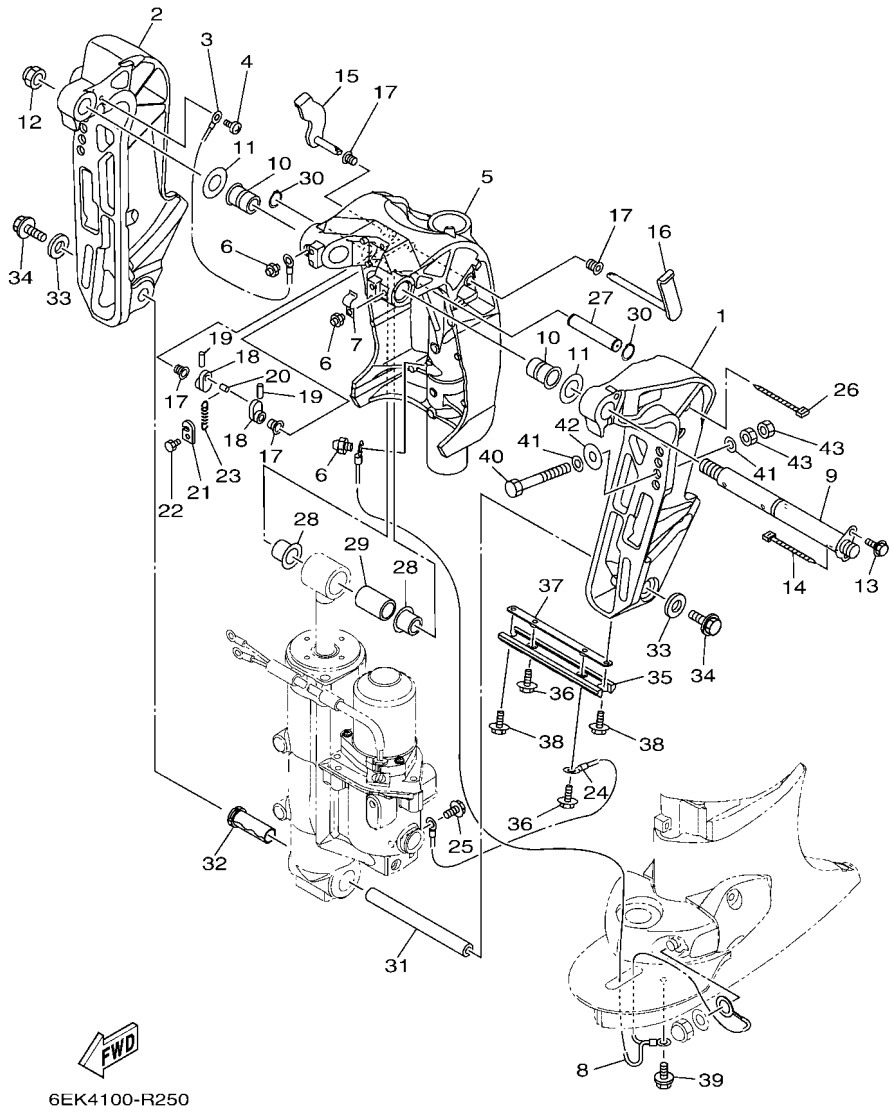

FIG. 25 BRACKET 1

REF. NO.	PART NO.	DESCRIPTION	LA	XA				REMARKS
26	90465–13M18	CLAMP	1	1				
27	6EK–43126–00	PIN, UPPER SHOCK MOUNT	1	1				
28	90386–18M35	BUSH	2	2				
29	90386–18001	BUSH	1	1				
30	93410–18M05	CIRCLIP	2	2				
31	6EK–43818–00	PIN, LOWER SHOCK MOUNT	1	1				
32	90383–20001	BUSH, FORMED	1	1				
33	90201–10060	WASHER, PLATE	2	2				
34	90119–10054	BOLT, WITH WASHER	2	2				
35	6H1–45251–03	ANODE	1	1				
36	90119–06M81	BOLT, WITH WASHER	2	2				
37	6EK–44536–00	PLATE 2	1	1				
38	97E95–06616	BOLT, HEXAGON W/W DEEP RECESS	2	2				
39	95D95–06010	BOLT, FLANGE DEEP RECESS	1	1				
40	90101–12065	BOLT (L:130MM)	4					UR L(20.3")
	90101–12065	BOLT (L:130MM)		2				UR X(25.3")
	90101–12066	BOLT (L:150MM)	2	2				UR
41	90201–13M01	WASHER, PLATE	8	8				
42	90201–12426	WASHER, PLATE	4	4				
43	95380–12600	NUT	8	8				

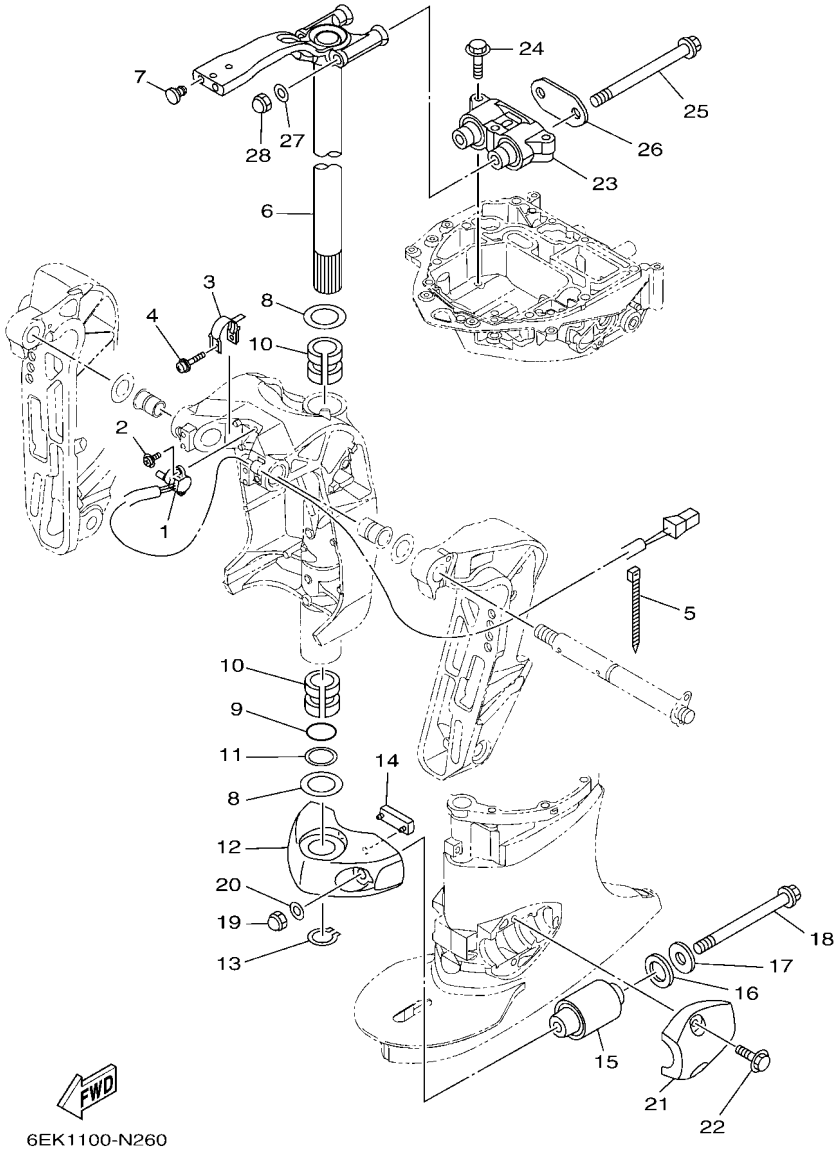

FIG. 26 BRACKET 2

REF. NO.	PART NO.	DESCRIPTION	LA	XA				REMARKS
1	67H–83672–01	TRIM SENDER	1	1				
2	97985–06216	SCREW, WITH WASHER	2	2				
3	64E–43139–11	CAM, TRIM SENDER	1	1				
4	90159–05059	SCREW, WITH WASHER	1	1				
5	90465–11M10	CLAMP	2	2				
6	6EK–42510–00–8D	STEERING BRACKET ASSY	1					L(20.3")
	6EK–42510–10–8D	STEERING BRACKET ASSY		1				X(25.3")
7	90338–08174	PLUG	2	2				
8	90201–38M60	WASHER, PLATE	2	2				
9	93210–37MH7	O-RING	1	1				
10	90386–38M32	BUSH	2	2				
11	90202–40M47	WASHER, PLATE	1	1				
12	6EK–44551–00–8D	HOUSING, LOWER MOUNT RUBBER 1	1	1				
13	93410–37M04	CIRCLIP	1	1				
14	61A–44575–00	DAMPER, LOWER MOUNT RUBBER	1	1				
15	63P–44555–00	MOUNT DAMPER, LOWER SIDE	2	2				
16	90202–32M19	WASHER, PLATE	2	2				
17	90201–16M55	WASHER, PLATE	2	2				
18	90105–14013	BOLT, FLANGE	2	2				
19	90176–14002	NUT, CROWN	2	2				
20	92995–14600	WASHER	2	2				
21	6EK–44553–00–8D	COVER, LOWER MOUNT	2	2				
22	90119–10058	BOLT, WITH WASHER	4	4				
23	6EK–44514–00	MOUNT DAMPER, UPPER SIDE	1	1				
24	95D75–10060	BOLT, FLANGE DEEP RECESS	3	3				
25	90105–14007	BOLT, FLANGE	2	2				
26	6EK–44526–00	PLATE	1	1				

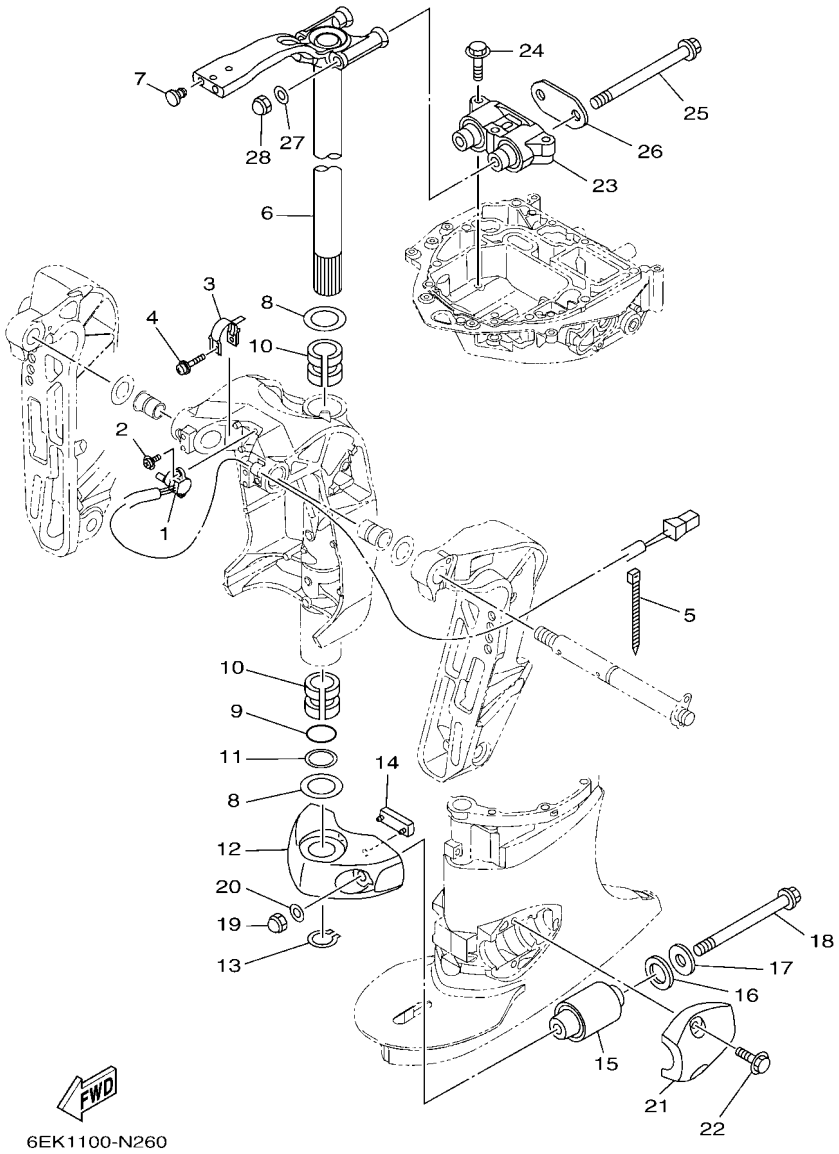

FIG. 26 BRACKET 2

REF. NO.	PART NO.	DESCRIPTION	LA	XA				REMARKS
27	92995–14600	WASHER	2	2				
28	90176–14002	NUT, CROWN	2	2				

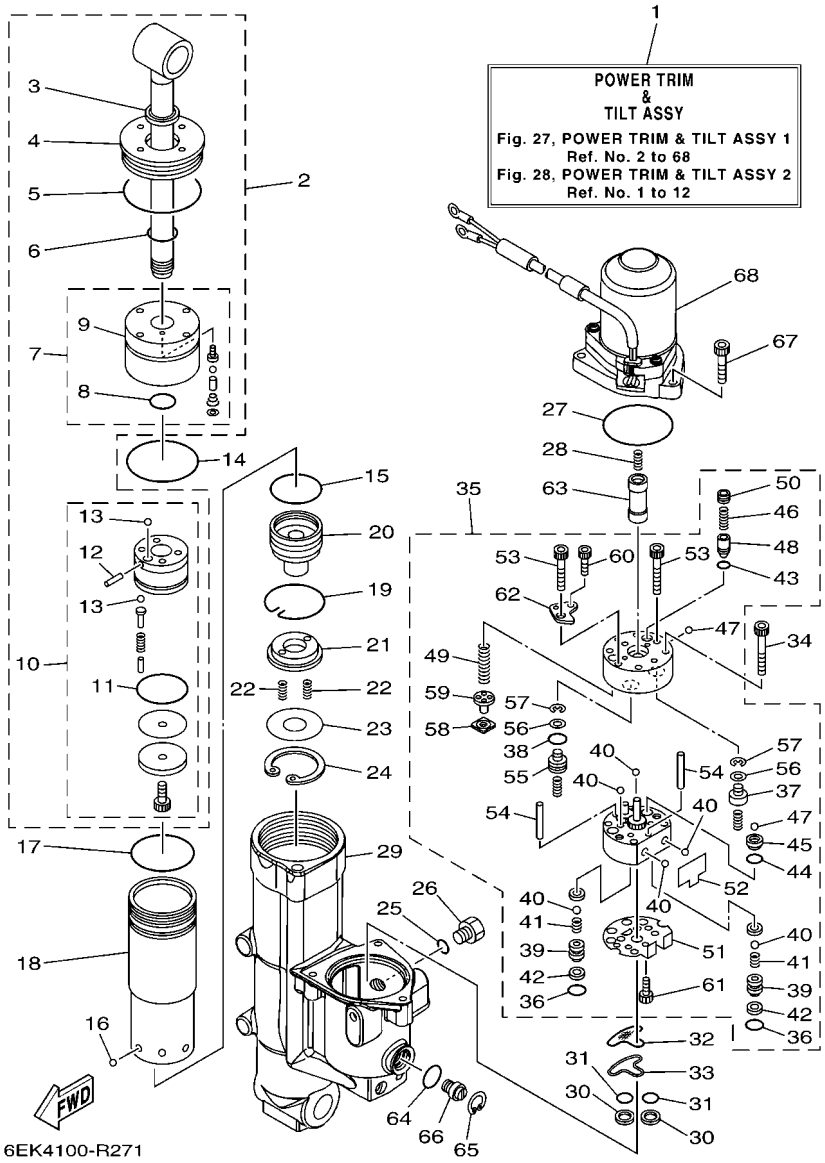

FIG. 27 POWER TRIM & TILT ASSY 1

REF. NO.	PART NO.	DESCRIPTION	LA	XA				REMARKS
1	6EK–43800–02	POWER TRIM & TILT ASSY	1	1				
2	6EK–43810–00	TILT PISTON SUB ASSY	1	1				
3	6H1–43812–00	.SEAL, DUST	1	1				
4	6EK–43821–00	.SCREW, TRIM CYLINDER END	1	1				
5	6EK–43861–00	.O-RING	1	1				
6	6D8–43861–00	.O-RING	1	1				
7	6EK–4380R–00	.CYLINDER END SUB ASSY	1	1				
8	6D8–43861–00	..O-RING	1	1				
9	6EK–43811–00	..SCREW, CYLINDER END	1	1				
10	6EK–4380P–00	.PISTON SUB ASSY	1	1				
11	6H1–43862–00	..O-RING	1	1				
12	91609–16012	..PIN, SPRING	1	1				
13	93505–32038	..BALL	5	5				
14	67F–43865–00	O-RING	1	1				
15	6H1–43862–00	O-RING	1	1				
16	93503–16003	BALL	6	6				
17	7BB–G3861–00	O-RING	1	1				
18	6EK–22471–01	CYLINDER, SHOCK ABSORBER	1	1				
19	6EK–43875–00	RING, SNAP	1	1				
20	6EK–4381B–00	FREE PISTON SUB ASSY	1	1				
21	6EK–43899–00	PLATE STOPPER	1	1				
22	62X–4384H–00	SPRING	2	2				
23	6EK–22434–00	PLATE, VALVE 1	1	1				
24	99009–47500	CIRCLIP	1	1				
25	93210–09165	O-RING	1	1				
26	6EK–43829–00	PLUG, RESERVOIR	1	1				
27	93210–68N50	O-RING	1	1				

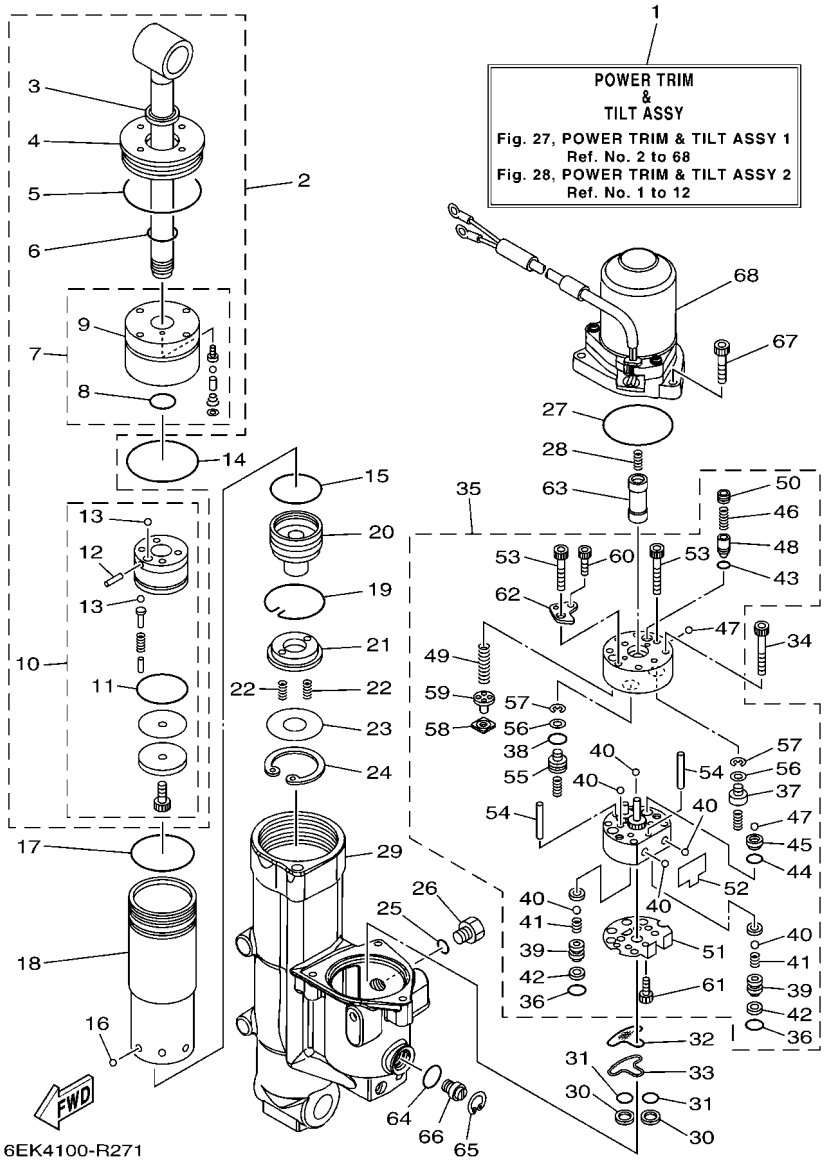

FIG. 27 POWER TRIM & TILT ASSY 1

REF. NO.	PART NO.	DESCRIPTION	LA	XA				REMARKS
28	62X–4384H–00	SPRING	1	1				
29	6EK–4380K–02	CYLINDER, TILT SUB ASSY	1	1				
30	6C6–43817–00	FILTER 2	2	2				
31	69J–4389J–00	O-RING	2	2				
32	6C5–43816–00	FILTER 1	1	1				
33	6C5–4380G–00	PLATE	1	1				
34	91318–05045	BOLT	4	4				
35	6EK–43830–00	GEAR PUMP ASSY	1	1				
36	69J–4389J–00	.O-RING	2	2				
37	6D8–4384M–00	.PISTON, SHUTTLE 2	1	1				
38	6H1–43883–00	.O-RING	1	1				
39	6EK–4382E–00	.ADAPTOR 2	2	2				
40	93505–32038	.BALL	6	6				
41	6C6–43853–00	.SPRING, MAIN VALVE	2	2				
42	6C6–4387G–00	.WASHER	2	2				
43	93210–04N51	.O-RING	1	1				
44	93210–064A5	.O-RING	1	1				
45	6D8–43851–00	.SEAT, RELIEF VALVE	1	1				
46	6C5–43855–10	.SPRING, UP RELIEF	1	1				
47	93501–08001	.BALL	2	2				
48	6D8–43844–00	.PIN, VALVE SUPPORT	1	1				
49	6EK–43856–00	.SPRING, DOWN RELIEF	1	1				
50	6D8–43843–00	.SCREW, VALVE LOCK	1	1				
51	6C5–43895–00	.SEAT, RELIEF VALVE	1	1				
52	6C5–43854–00	.SPRING, MANUAL RELEASE	1	1				
53	91318–05030	.BOLT	2	2				
54	93604–26256	.PIN, DOWEL	2	2				

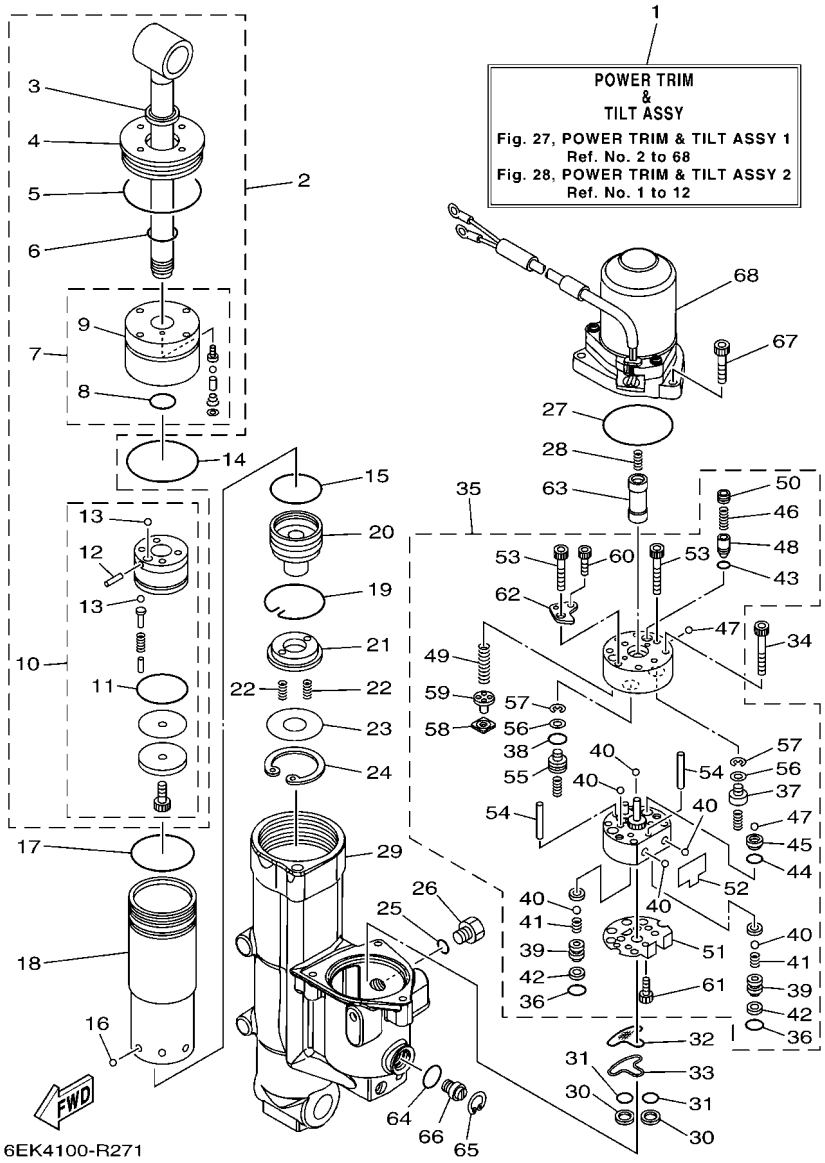

FIG. 27 POWER TRIM & TILT ASSY 1

REF. NO.	PART NO.	DESCRIPTION	LA	XA				REMARKS
55	6D8–43841–00	.PISTON, SHUTTLE	1	1				
56	69A–4384F–00	.SEAL, MAIN VALVE	2	2				
57	99002–03600	.CIRCLIP	2	2				
58	6H1–4384G–11	.SEAL, RELIEF VALVE	1	1				
59	6H1–43844–10	.PIN, VALVE SUPPORT	1	1				
60	91318–03025	.BOLT	2	2				
61	91318–03005	.BOLT	1	1				
62	6D8–4382L–00	.CAP, RELIEF VALVE	1	1				
63	6EK–43831–00	CONNECTOR, SHAFT	1	1				
64	6D8–43863–00	O-RING	1	1				
65	6H1–43875–00	RING, SNAP	1	1				
66	6EK–43845–00	SCREW, MANUAL RELEASE	1	1				
67	91380–06025	BOLT	3	3				
68	6EK–43880–11	MOTOR ASSY	1	1				REFER TO FIG.28

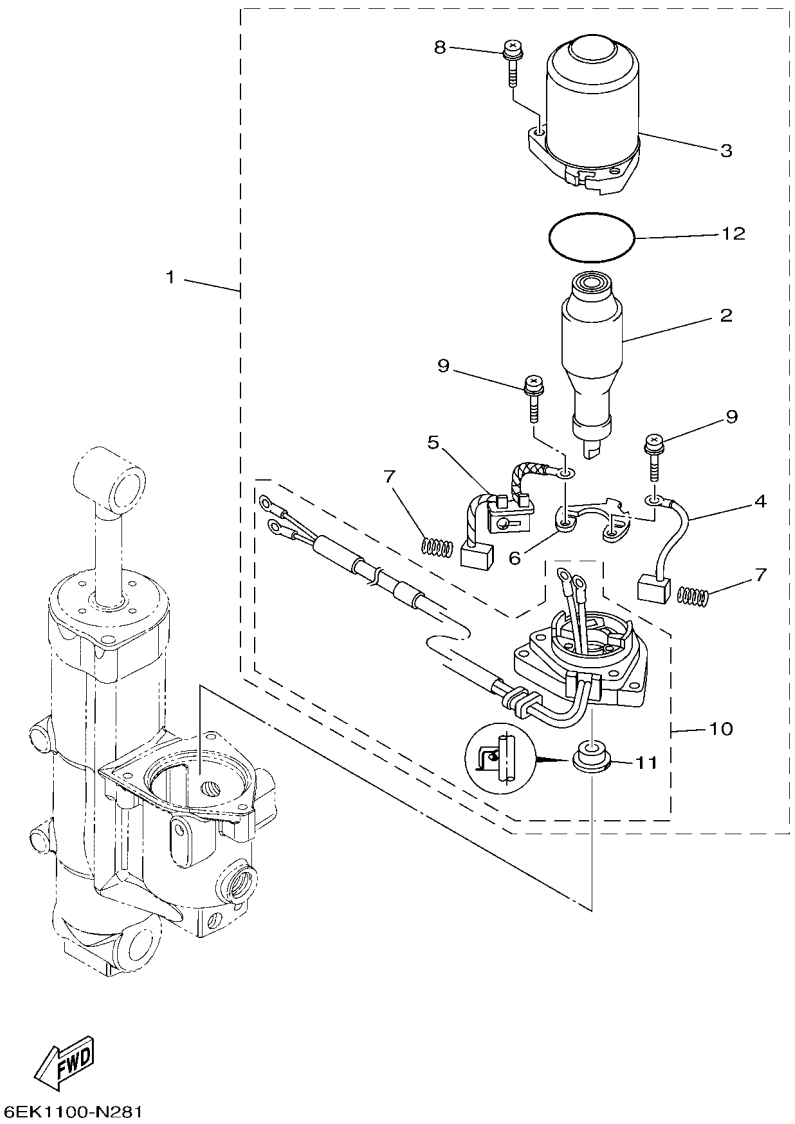

FIG. 28 POWER TRIM & TILT ASSY 2

REF. NO.	PART NO.	DESCRIPTION	LA	XA				REMARKS
1	6EK–43880–11	MOTOR ASSY	1	1				
2	6EK–43805–01	.ARMATURE ASSY	1	1				
3	6EK–43804–11	.STATOR ASSY	1	1				
4	6EK–43892–00	.BRUSH 2	1	1				
5	6EK–82181–00	.CIRCUIT BREAKER COMP.	1	1				
6	6EK–4380F–00	.PLATE, BRUSH HOLDER	1	1				
7	62X–4386K–00	.SPRING, BRUSH	2	2				
8	63P–43879–10	.SCREW, WITH WASHER	3	3				
9	97602–04316	.SCREW, PAN HEAD WITH WASHER	2	2				
10	6EK–43881–11	.FRAME, END	1	1				
11	6EK–43882–00	..OIL SEAL	1	1				
12	93210–554A9	.O-RING	1	1				

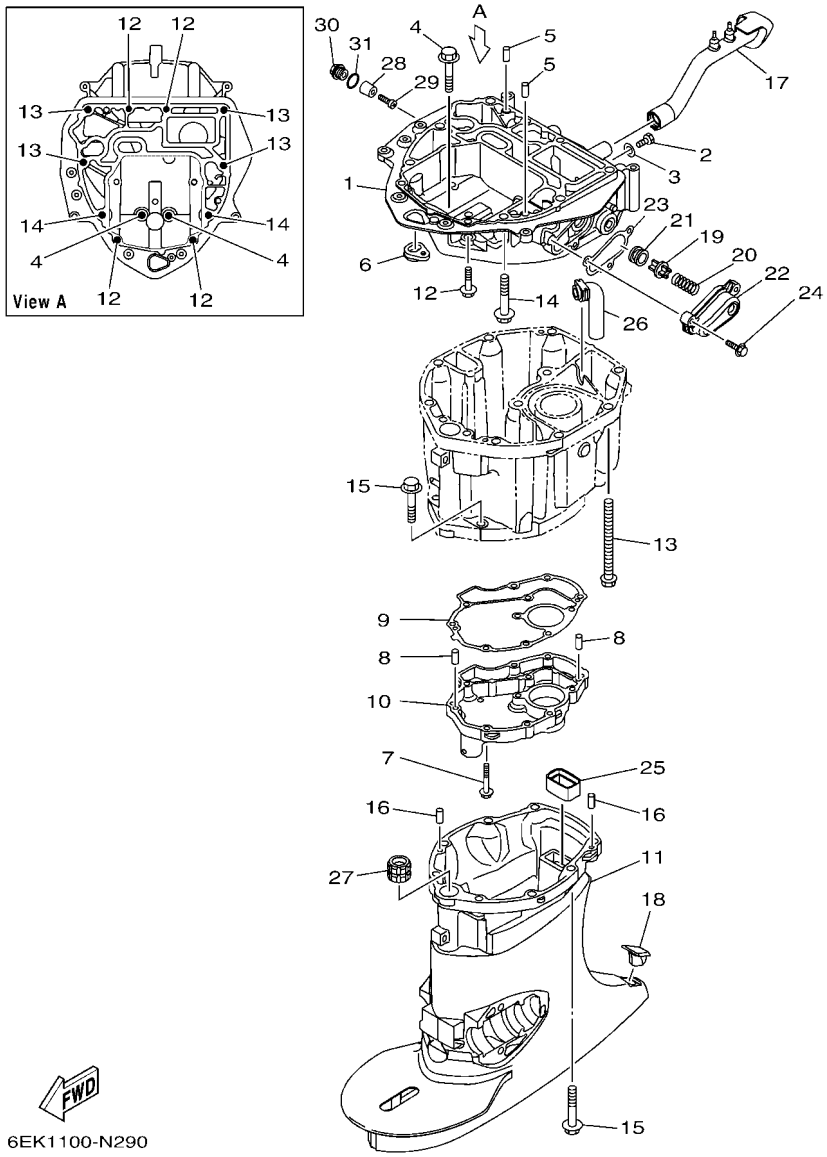

FIG. 29 UPPER CASING

REF. NO.	PART NO.	DESCRIPTION	LA	XA				REMARKS
1	6EK–41137–01	GUIDE, EXHAUST	1	1				
2	97D95–08014	BOLT, HEXAGON DEEP RECESS	1	1				
3	90430–08143	GASKET	1	1				
4	97E75–10545	BOLT, HEXAGON W/W DEEP RECESS	2	2				
5	93608–12M05	PIN, DOWEL	2	2				
6	6EK–42727–00	GROMMET	1	1				
7	95D95–06030	BOLT, FLANGE DEEP RECESS	11	11				
8	93606–12019	PIN, DOWEL	2	2				
9	6EK–41134–00	GASKET, EXHAUST MANIFOLD	1	1				
10	6EK–45181–01	PLATE	1	1				
11	6EK–45111–00–8D	CASING, UPPER	1					L(20.3")
	6EK–45111–10–8D	CASING, UPPER		1				X(25.3")
12	97E75–08535	BOLT, HEXAGON W/W DEEP RECESS	4	4				
13	90119–10007	BOLT, WITH WASHER	4	4				
14	97E75–10545	BOLT, HEXAGON W/W DEEP RECESS	2	2				
15	97E75–10545	BOLT, HEXAGON W/W DEEP RECESS	8	8				
16	93606–12019	PIN, DOWEL	2	2				
17	6EK–42769–00	SEAL, RUBBER	1	1				
18	6C5–45155–00	CAP	1	1				
19	6G5–12416–00	VALVE, PRESSURE CONTROL	1	1				
20	90501–200A2	SPRING, COMPRESSION	1	1				
21	90480–20M05	GROMMET	1	1				
22	6EK–1246A–00–9S	COVER 1	1	1				
23	6EK–12435–A0	GASKET	1	1				
24	95D95–06025	BOLT, FLANGE DEEP RECESS	3	3				
25	67F–45127–00	SEAL	1	1				
26	6EK–45135–00	PIPE	1	1				

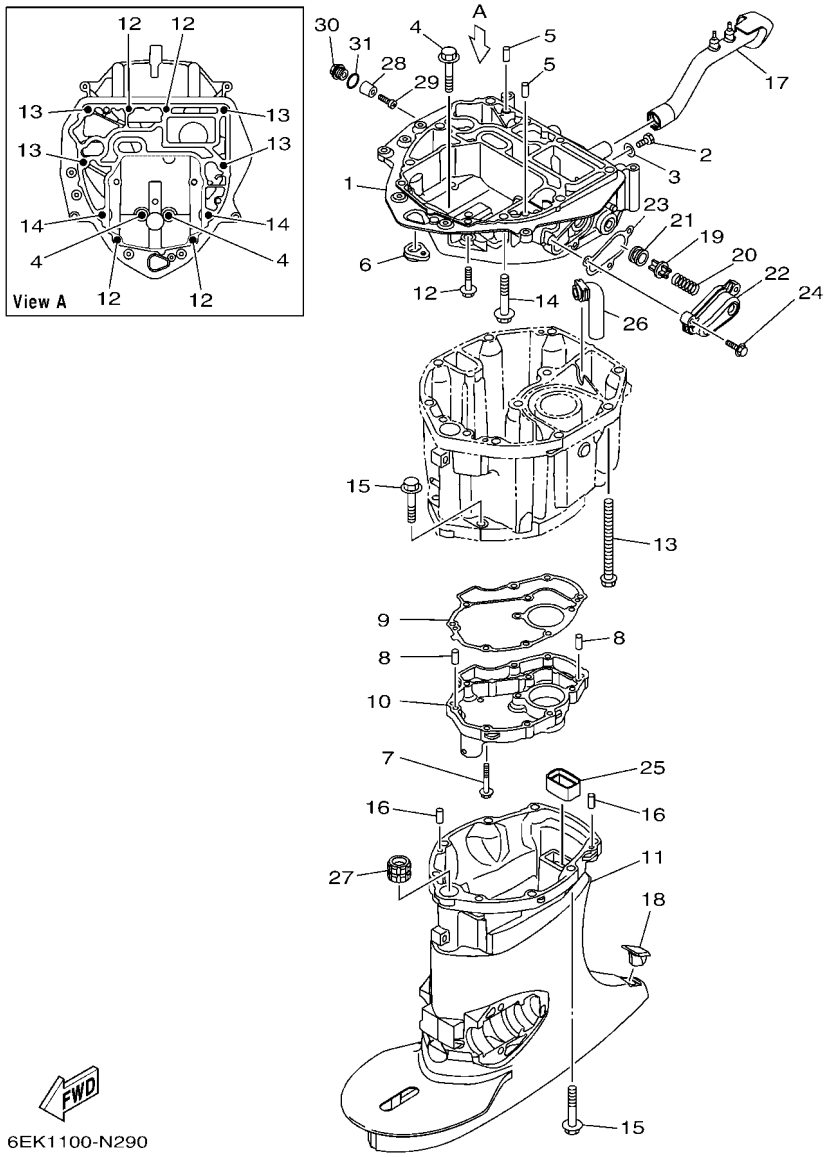

FIG. 29 UPPER CASING

REF. NO.	PART NO.	DESCRIPTION	LA	XA				REMARKS
27	6EK–45318–00	BUSHING, DRIVE SHAFT		1				X(25.3")
28	6G8–11325–00	ANODE	1	1				
29	98980–05025	SCREW, BIND	1	1				
30	6G8–11197–A0	PLUG, BLIND	1	1				
31	93210–13M63	O-RING	1	1				

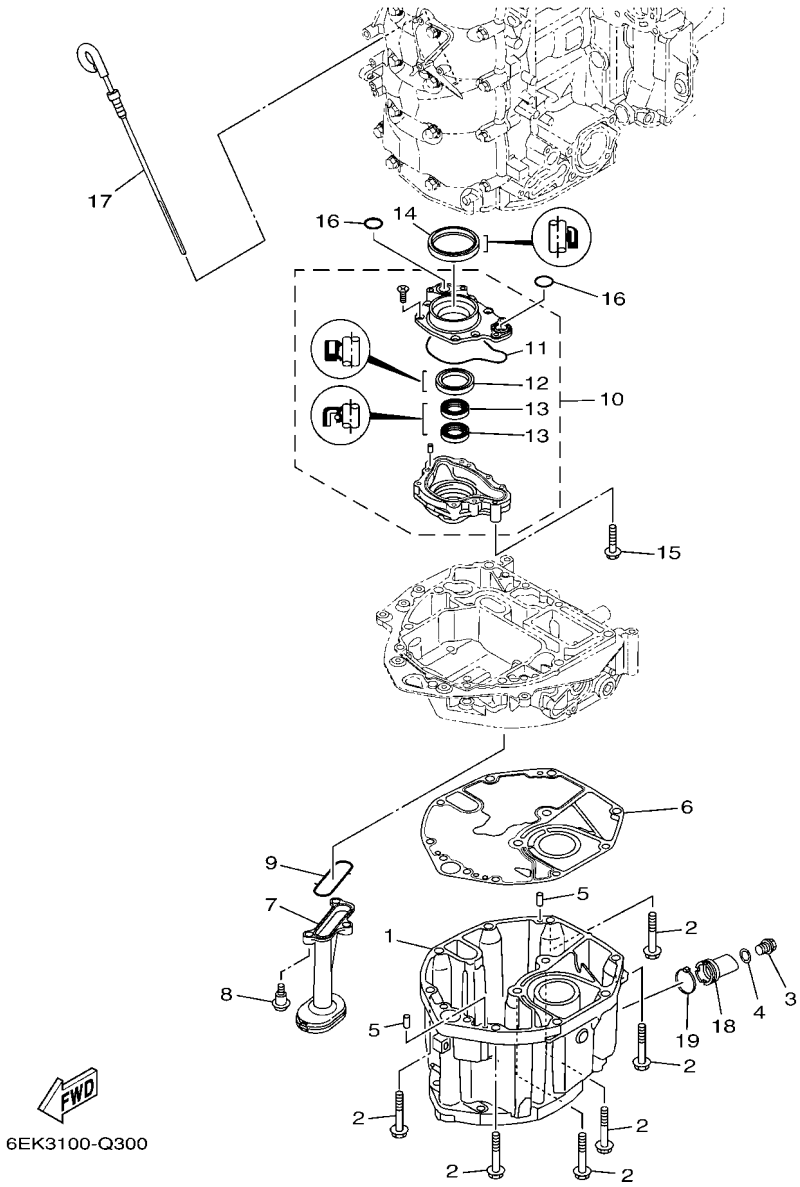

FIG. 30 OIL PAN

REF. NO.	PART NO.	DESCRIPTION	LA	XA				REMARKS
1	6EK–15311–01	OIL PAN	1	1				
2	97E75–10545	BOLT, HEXAGON W/W DEEP RECESS	6	6				
3	90340–14M06	PLUG, STRAIGHT SCREW	1	1				
4	90430–14M09	GASKET	1	1				
5	93606–12019	PIN, DOWEL	2	2				
6	6EK–15312–00	GASKET, OIL PAN	1	1				
7	67F–13411–00	STRAINER, OIL	1	1				
8	90109–06292	BOLT	3	3				
9	67F–13415–00	SEAL, OIL STRAINER	1	1				
10	6EK–13300–00	OIL PUMP ASSY	1	1				
11	6EK–13329–00	.GASKET, PUMP COVER	1	1				
12	6AW–13119–00	.OIL SEAL	1	1				
13	69J–13631–00	.OIL SEAL	2	2				
14	69J–11355–00	SEAL, CYLINDER 1	1	1				
15	90105–06151	BOLT, FLANGE	4	4				
16	93210–19MJ1	O-RING	2	2				
17	6EK–15362–10	PLUG, OIL LEVEL	1	1				
18	6EK–15316–00	DAMPER 1	1	1				
19	90465–11M59	CLAMP	1	1				

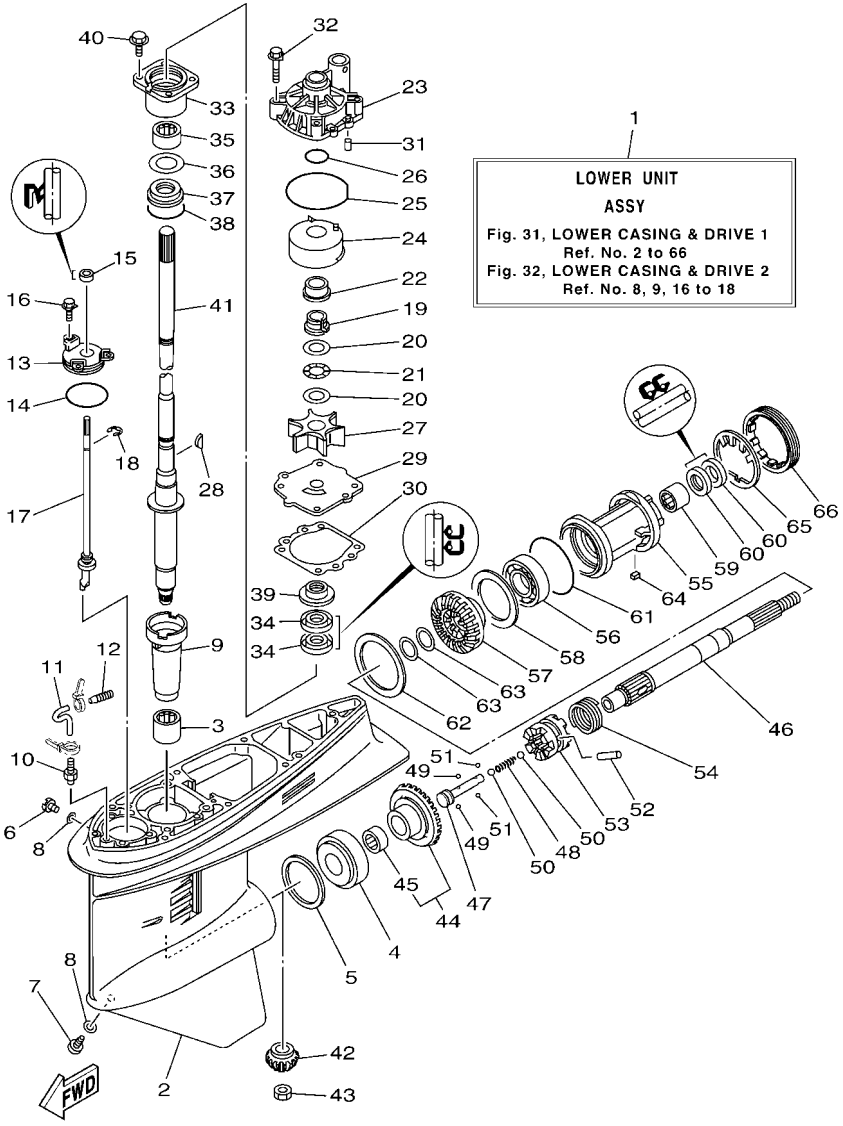

FIG. 31 LOWER CASING & DRIVE 1

REF. NO.	PART NO.	DESCRIPTION	LA	XA				REMARKS
1	6EM–45300–02–8D	LOWER UNIT ASSY	1					L(20.3")
	6EM–45300–12–8D	LOWER UNIT ASSY		1				X(25.3")
2	6E5–45301–07–8D	CASING, LOWER	1	1				
3	93315–628U9	BEARING	1	1				
4	93332–000U7	BEARING	1	1				
5	6E5–45567–01	SHIM (T:0.10MM)	1	1				UR
	6E5–45567–10	SHIM (T:0.12MM)	1	1				UR
	6E5–45567–20	SHIM (T:0.15MM)	1	1				UR
	6E5–45567–30	SHIM (T:0.18MM)	1	1				UR
	6E5–45567–40	SHIM (T:0.30MM)	1	1				UR
	6E5–45567–50	SHIM (T:0.40MM)	1	1				UR
	6E5–45567–60	SHIM (T:0.50MM)	1	1				UR
6	90340–08002	PLUG, STRAIGHT SCREW	1	1				
7	688–45341–10	PLUG, DRAIN	1	1				
8	90430–08003	GASKET	2	2				
9	6E5–45536–00	SLEEVE, DRIVE SHAFT	1	1				
10	6E5–45378–00	NIPPLE, HOSE	1	1				
11	90445–07ME8	HOSE (L80)	1					L(20.3")
	90445–07ME9	HOSE (L120)		1				X(25.3")
12	6E5–83558–10	END, NIPPLE	1	1				
13	6E5–45321–00	PLATE	1	1				
14	93210–58144	O-RING	1	1				
15	93106–09014	OIL SEAL	1	1				
16	90119–06M10	BOLT, WITH WASHER	3	3				
17	6E5–44150–03	SHIFT CAM ASSY	1	1				
18	99001–08600	CIRCLIP	1	1				
19	61A–45538–00	SPACER 1	1	1				

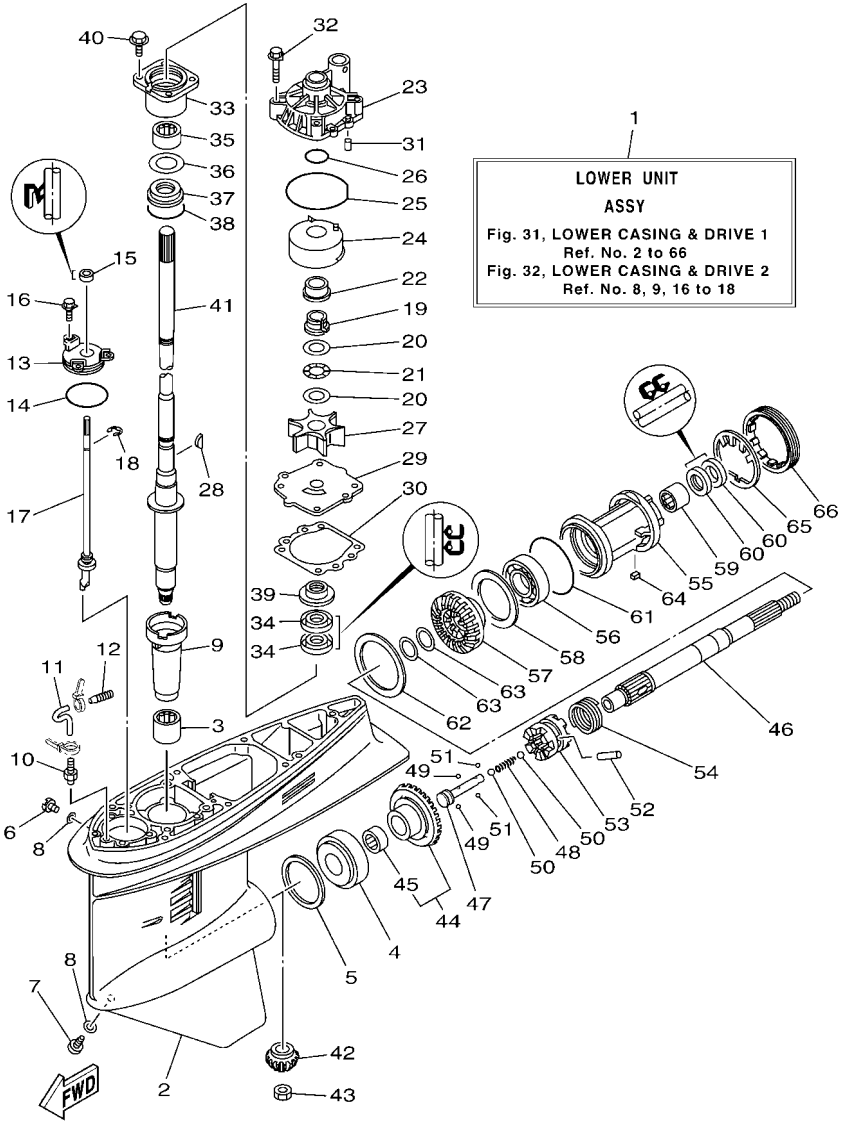

FIG. 31 LOWER CASING & DRIVE 1

REF. NO.	PART NO.	DESCRIPTION	LA	XA				REMARKS
20	90201–22M01	WASHER, PLATE	2	2				
21	90206–22M19	WASHER, WAVE	1	1				
22	61A–45527–00	COLLAR, DRIVE SHAFT	1	1				
23	61A–44311–01	HOUSING, WATER PUMP	1	1				
24	61A–44322–02	INSERT, CARTRIDGE	1	1				
25	93210–86M38	O-RING	1	1				
26	93210–37160	O-RING	1	1				
27	6E5–44352–01	IMPELLER	1	1				
28	90280–04M05	KEY, WOODRUFF	1	1				
29	6EK–44323–00	OUTER PLATE, CARTRIDGE	1	1				
30	6E5–44315–A0	GASKET, WATER PUMP	1	1				
31	93606–12019	PIN, DOWEL	2	2				
32	90119–08M14	BOLT, WITH WASHER	4	4				
33	6E5–45331–00–9S	HOUSING, BEARING	1	1				
34	93101–28M16	OIL SEAL	2	2				
35	93317–330U2	BEARING	1	1				
36	6E5–45587–01	SHIM (T:0.10MM)	1	1				UR
	6E5–45587–10	SHIM (T:0.12MM)	1	1				UR
	6E5–45587–20	SHIM (T:0.15MM)	1	1				UR
	6E5–45587–30	SHIM (T:0.18MM)	1	1				UR
	6E5–45587–40	SHIM (T:0.30MM)	1	1				UR
	6E5–45587–50	SHIM (T:0.40MM)	1	1				UR
	6E5–45587–60	SHIM (T:0.50MM)	1	1				UR
37	93341–930V2	BEARING	1	1				
38	93210–55M14	O-RING	1	1				
39	6E5–45344–00	COVER, OIL SEAL	1	1				
40	97E95–08525	BOLT, HEXAGON W/W DEEP RECESS	4	4				

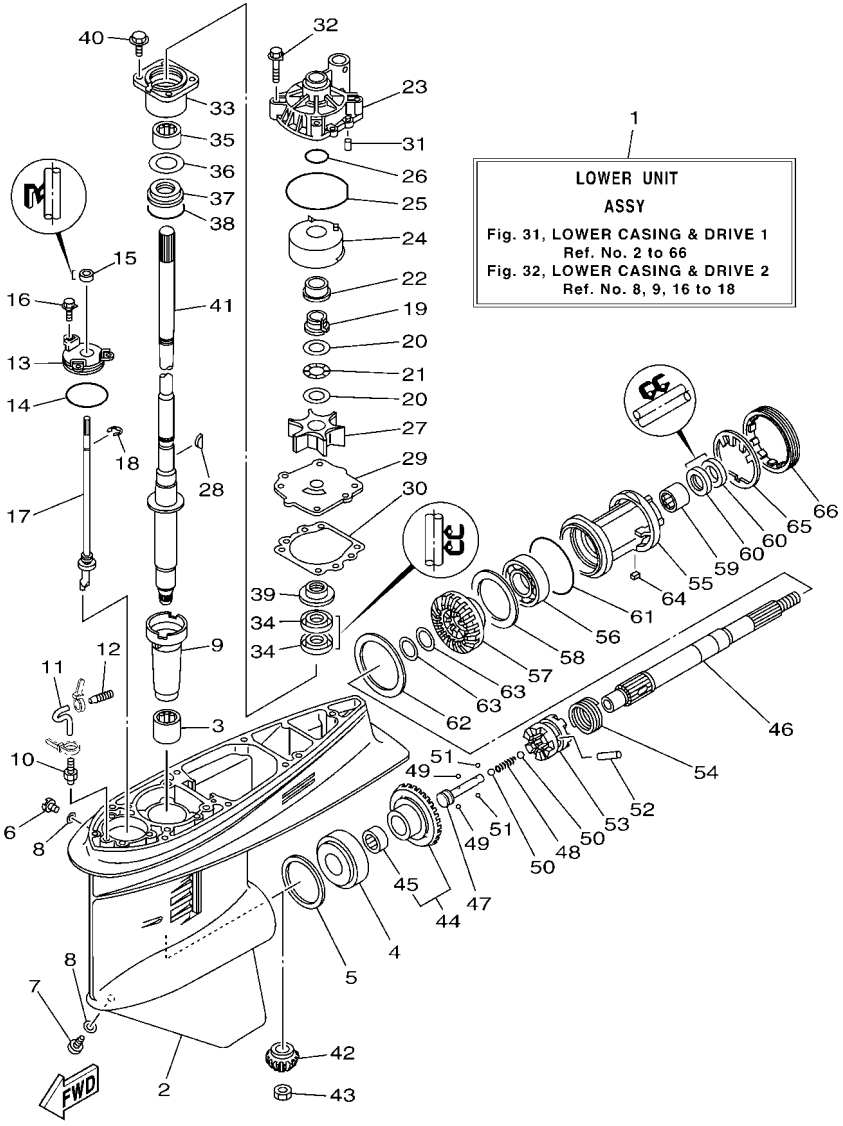

FIG. 31 LOWER CASING & DRIVE 1

REF. NO.	PART NO.	DESCRIPTION	LA	XA				REMARKS
41	6EK–45501–00	DRIVE SHAFT COMP.	1					L(20.3")
	6EK–45501–10	DRIVE SHAFT COMP.		1				X(25.3")
42	6EM–45551–00	PINION (13T)	1	1				
43	90170–16M01	NUT	1	1				
44	6EM–45560–00	GEAR 1 (28T)	1	1				
45	93315–425U7	.BEARING	1	1				
46	6E5–45611–01	SHAFT, PROPELLER	1	1				
47	6E5–45634–02	SLIDE, SHIFT	1	1				
48	90501–16M37	SPRING, COMPRESSION	1	1				
49	93507–32009	BALL	2	2				
50	93511–32017	BALL	2	2				
51	93503–16003	BALL	2	2				
52	90250–08M07	PIN, STRAIGHT	1	1				
53	68V–45631–02	CLUTCH, DOG	1	1				
54	6E5–45633–01	RING, CROSS PIN	1	1				
55	6E5–45332–00–CA	HOUSING, BEARING	1	1				
56	93306–208U0	BEARING	1	1				
57	68V–45571–00	GEAR 2 (28T)	1	1				
58	6E5–45576–00	WASHER, THRUST 2	1	1				
59	93315–430U8	BEARING	1	1				
60	93101–30M17	OIL SEAL	2	2				
61	93210–86M39	O-RING	1	1				
62	6L6–45577–00	SHIM (T:0.10MM)	1	1				UR
	6L6–45577–10	SHIM (T:0.12MM)	1	1				UR
	6L6–45577–20	SHIM (T:0.15MM)	1	1				UR
	6L6–45577–30	SHIM (T:0.18MM)	1	1				UR
	6L6–45577–40	SHIM (T:0.30MM)	1	1				UR

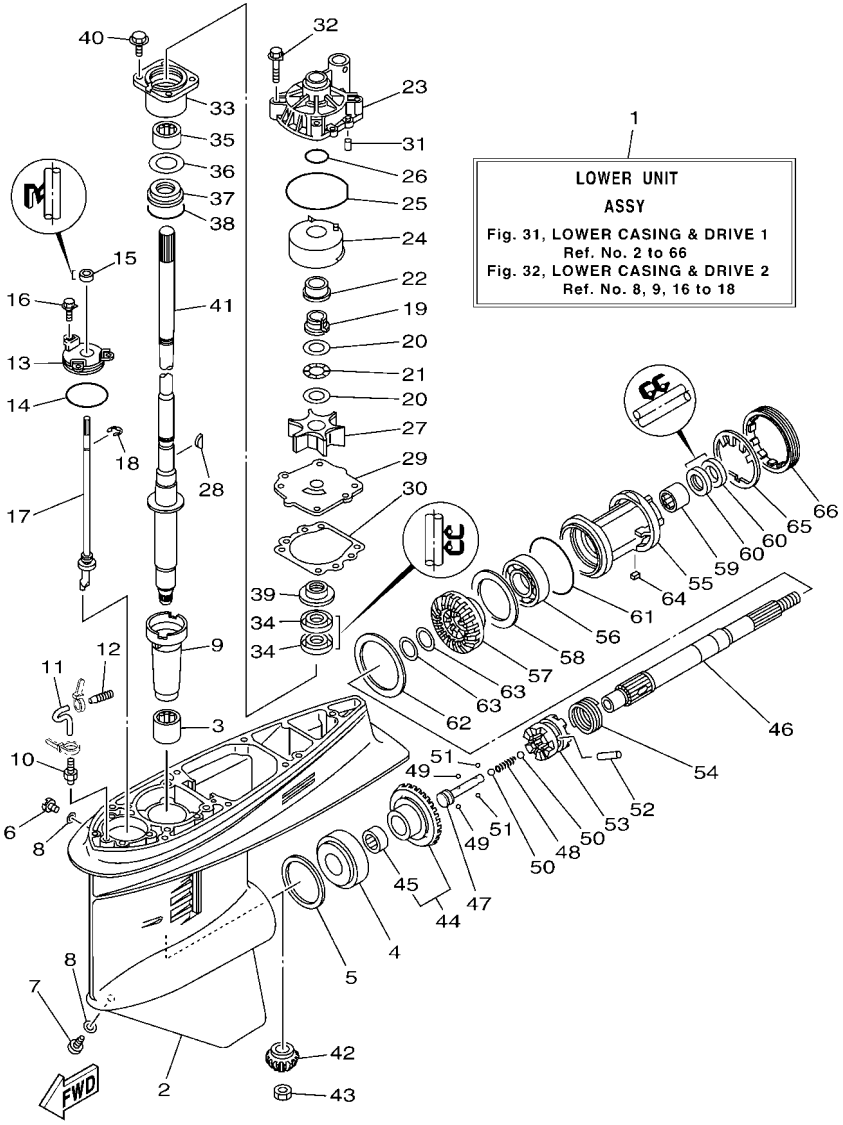

FIG. 31 LOWER CASING & DRIVE 1

REF. NO.	PART NO.	DESCRIPTION	LA	XA				REMARKS
62	6L6–45577–50	SHIM (T:0.40MM)	1	1				UR
	6L6–45577–60	SHIM (T:0.50MM)	1	1				UR
63	90201–30M92	WASHER, PLATE	2	2				
64	90282–04010	KEY, STRAIGHT	1	1				
65	688–45383–02	WASHER, CLAW	1	1				
66	688–45384–02	NUT	1	1				

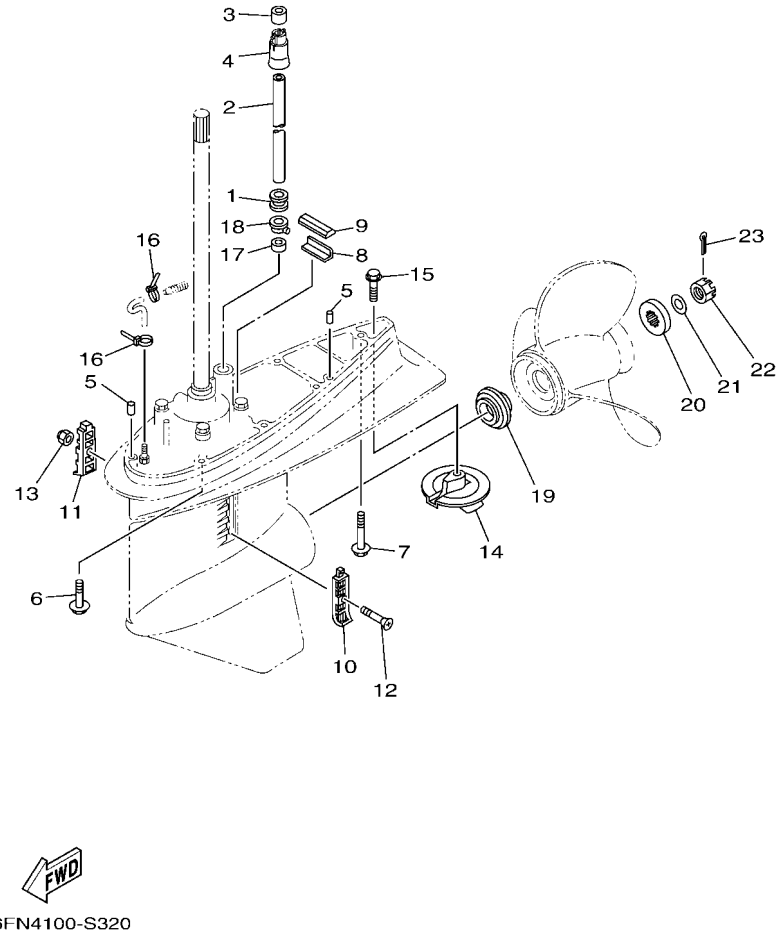

FIG. 32 LOWER CASING & DRIVE 2

REF. NO.	PART NO.	DESCRIPTION	LA	XA				REMARKS
1	6E5–44366–00	DAMPER, WATER SEAL 2	1	1				
2	90440–16001	PIPE (L167)	1					L(20.3")
	90440–16002	PIPE (L294)		1				X(25.3")
3	6EK–44365–01	DAMPER, WATER SEAL 1	1	1				
4	6EK–44379–00	GUIDE, WATER TUBE	1	1				
5	93608–12M05	PIN, DOWEL	2	2				
6	97E95–10545	BOLT, HEXAGON W/W DEEP RECESS	6	6				
7	90119–10M89	BOLT, WITH WASHER	1	1				
8	663–45376–00	GUIDE, SEAL DAMPER	1	1				
9	688–45375–00	DAMPER, SEAL	1	1				
10	688–45214–02	COVER, WATER INLET 1	1	1				
11	688–45215–02	COVER, WATER INLET 2	1	1				
12	90152–05M07	SCREW, COUNTERSUNK	1	1				
13	90185–05002	NUT, NYLON	1	1				
14	6E5–45371–01	TAB-TRIM	1	1				
15	90105–10M00	BOLT, FLANGE	1	1				
16	90465–11M10	CLAMP	2	2				
17	6E5–44365–00	DAMPER, WATER SEAL 1	1	1				
18	6E5–44312–00	COVER, WATER PUMP HOUSING	1	1				
19	63P–45987–00	SPACER 1	1	1				
20	688–45997–01	SPACER 2	1	1				
21	92990–18200	WASHER	1	1				
22	90171–18M04	NUT, CASTLE	1	1				
23	91490–40030	PIN. COTTER	1	1				

FIG. 33 STEERING GUIDE

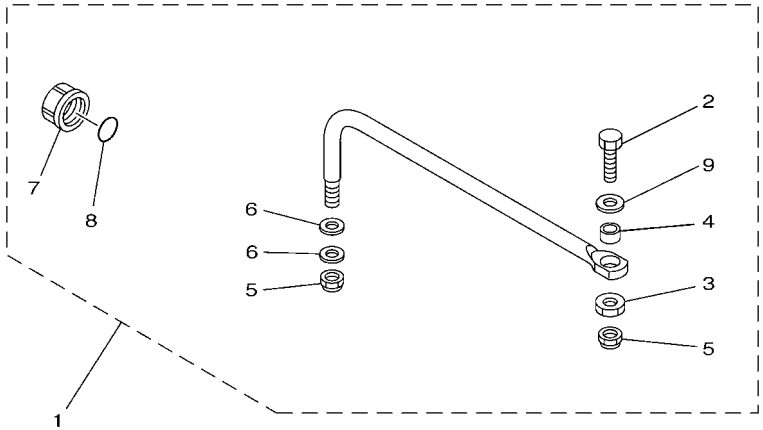

6EK1100-N330

REF. NO.	PART NO.	DESCRIPTION	LA	XA				REMARKS
1	6EK–61350–00	STEERING GUIDE ATTACHMENT KIT	1	1				AP
2	6E5–61355–00	.BOLT	1	1				
3	90170–09M03	.NUT	1	1				
4	90387–10M42	.COLLAR	1	1				
5	90185–09M01	.NUT, SELF-LOCKING	2	2				
6	90201–10M20	.WASHER, PLATE	2	2				
7	6E5–43145–01	.CAP, CLAMP BRACKET	1	1				
8	93210–16275	.O-RING	1	1				
9	90201–10081	.WASHER, PLATE	1	1				

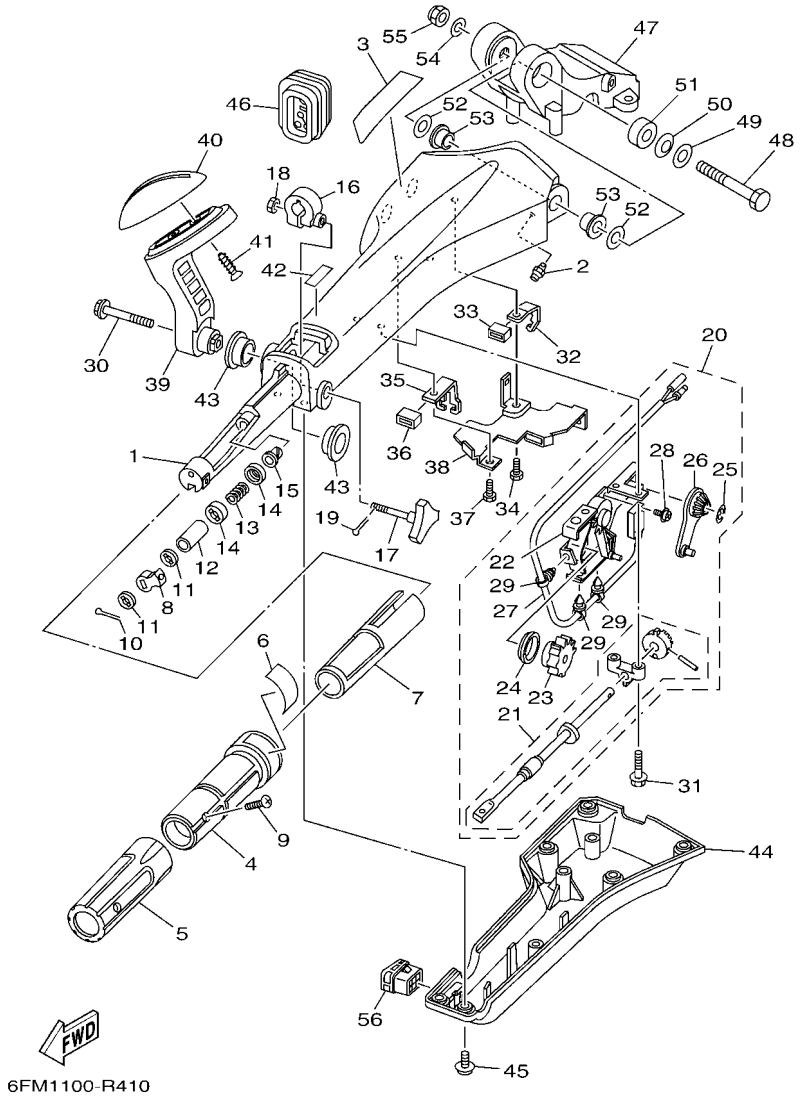

FIG. 34 OPTIONAL PARTS 1

REF. NO.	PART NO.	DESCRIPTION	LA	XA				REMARKS
1	6X4–42111–02–8D	HANDLE, STEERING	1	1				
2	93700–06002	NIPPLE, GREASE	1	1				
3	6X4–48215–00	GRAPHIC	1	1				
4	6X4–42119–01	GRIP, STEERING HANDLE	1	1				
5	6X4–42177–00	RUBBER, HANDLE	1	1				
6	6X4–42137–00	INDICATOR, THROTTLE	1	1				
7	6X4–41291–00	BUSHING	1	1				
8	6X4–44139–01	COLLAR	1	1				
9	90152–05007	SCREW, COUNTERSUNK	1	1				
10	91490–20010	PIN. COTTER	1	1				
11	6X4–44177–00	WASHER	2	2				
12	6X4–42128–00	COLLAR, DISTANCE 1	1	1				
13	90501–23215	SPRING, COMPRESSION	1	1				
14	6X4–44188–00	WASHER	2	2				
15	90386–08032	BUSH	1	1				
16	63D–42126–00	FRICTION, STEERING HANDLE GRIP	1	1				
17	6X4–48154–00	KNOB, THROTTLE	1	1				
18	95380–06600	NUT, HEXAGON	1	1				
19	91490–20010	PIN. COTTER	1	1				
20	6X4–44100–01	SHIFT LINK ASSY	1	1				
21	6X4–42115–00	.SHAFT, STEERING HANDLE	1	1				
22	6X4–44102–00	.SHIFT ASSIST ASSY.	1	1				
23	6X4–47731–01	.GEAR, DRIVE	1	1				
24	6X4–44132–00	.BUSHING	1	1				
25	6X4–14137–00	.CLIP	1	1				
26	6X4–48261–00	.ARM, THROTTLE	1	1				
27	6X4–82540–00	.NEUTRAL SWITCH ASSY	1	1				

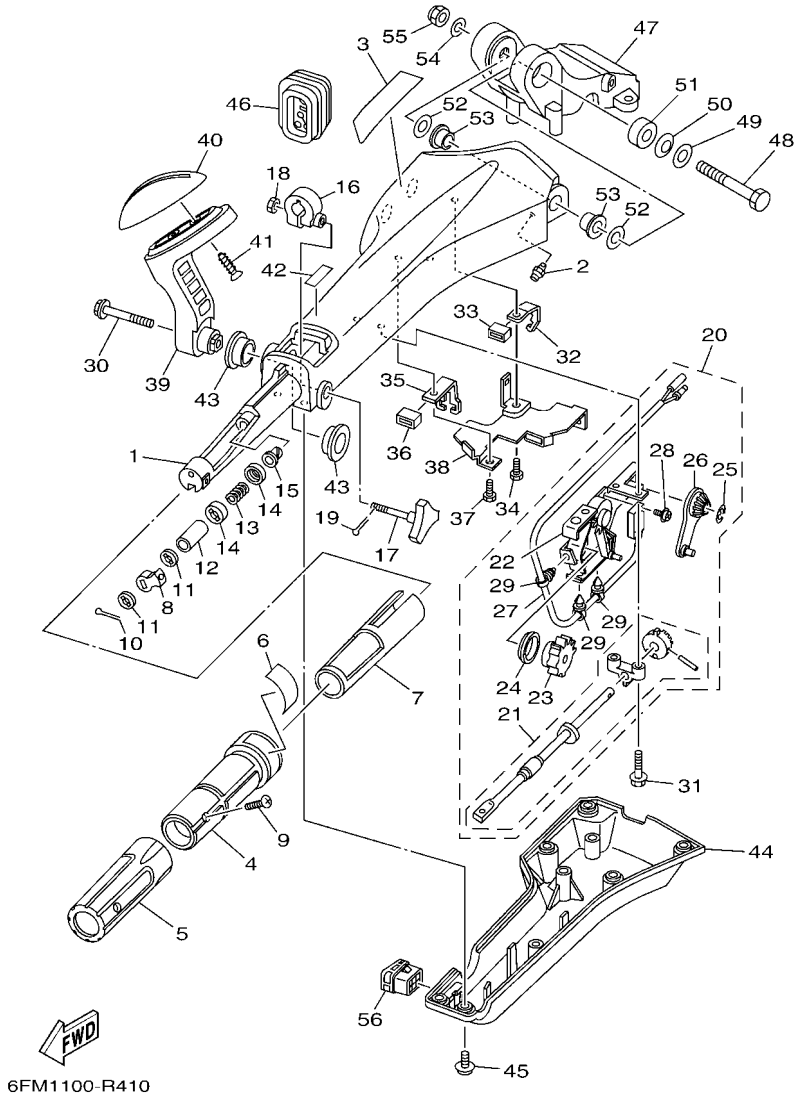

FIG. 34 OPTIONAL PARTS 1

REF. NO.	PART NO.	DESCRIPTION	LA	XA				REMARKS
28	703–48129–00	.SCREW 3	2	2				
29	6X4–42821–00	.BAND, CLAMP	3	3				
30	97E95–08540	BOLT, HEXAGON W/W DEEP RECESS	1	1				
31	97E95–06530	BOLT, HEXAGON W/W DEEP RECESS	2	2				
32	6X4–48538–00	CLAMP, CABLE 1	1	1				
33	6X4–26367–00	PROTECTOR	1	1				
34	97D95–06014	BOLT, HEXAGON DEEP RECESS	1	1				
35	6X4–48538–10	CLAMP, CABLE 1	1	1				
36	6X4–26367–00	PROTECTOR	1	1				
37	97D95–06014	BOLT, HEXAGON DEEP RECESS	1	1				
38	6X4–42159–00	STAY	1	1				
39	6X4–44159–A0–8D	HANDLE, GEAR SHIFT	1	1				
40	6X4–44173–00	LEVER, SHIFT CONTROL	1	1				
41	97780–60920	SCREW, TAPPING	2	2				
42	6X3–44191–00	INDICATOR, SHIFT	1	1				
43	90386–26MA3	BUSH	2	2				
44	6X4–42131–01	COVER, HANDLE STEERING	1	1				
45	97985–06216	SCREW, WITH WASHER	6	6				
46	6X4–42725–01	GROMMET	1	1				
47	63D–42121–22–8D	BRACKET	1	1				
48	90101–12014	BOLT	1	1				
49	92990–12200	WASHER, PLAIN	1	1				
50	90206–12M22	WASHER, WAVE	1	1				
51	90387–12M02	COLLAR	1	1				
52	90201–12035	WASHER, PLATE	2	2				
53	90386–12003	BUSH	2	2				
54	92990–12600	WASHER, PLATE	1	1				

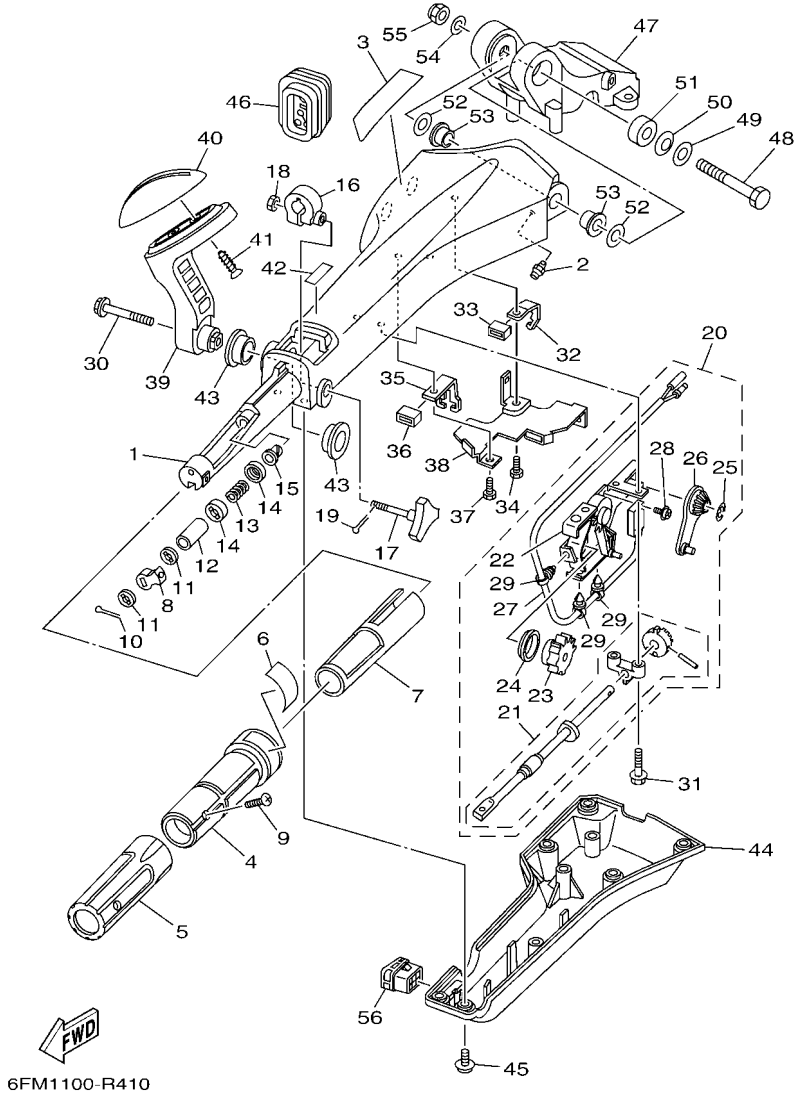

FIG. 34 OPTIONAL PARTS 1

REF. NO.	PART NO.	DESCRIPTION	LA	XA				REMARKS
55	90185–12M12	NUT, SELF-LOCKING	1	1				
56	6X4–42728–10	CAP	1	1				

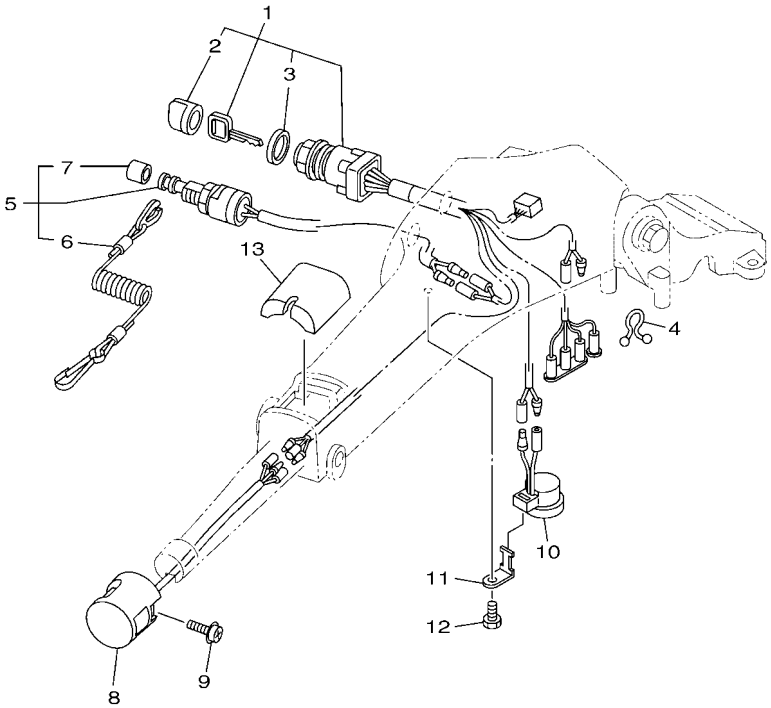

6CJ2110-L330

FIG. 35 OPTIONAL PARTS 2

REF. NO.	PART NO.	DESCRIPTION	LA	XA				REMARKS
1	6X4–82510–01	MAIN SWITCH ASSY	1	1				
2	676–82577–01	.CAP, KEY	1	1				
3	703–82532–00	.CAP	1	1				
4	90464–08M07	CLAMP	1	1				
5	69W–82575–00	ENGINE STOP SWITCH ASSY	1	1				
6	682–82556–00	.LANYARD, STOP SWITCH	1	1				
7	689–8257Y–00	.CAP	1	1				
8	6X4–82563–01	TRIM & TILT SWITCH ASSY	1	1				
9	97980–06216	SCREW, WITH WASHER	1	1				
10	6X4–83383–00	BUZZER	1	1				
11	6X4–83386–00	STAY, BUZZER	1	1				
12	97D95–06014	BOLT, HEXAGON DEEP RECESS	1	1				
13	6X4–81942–01	COVER	1	1				

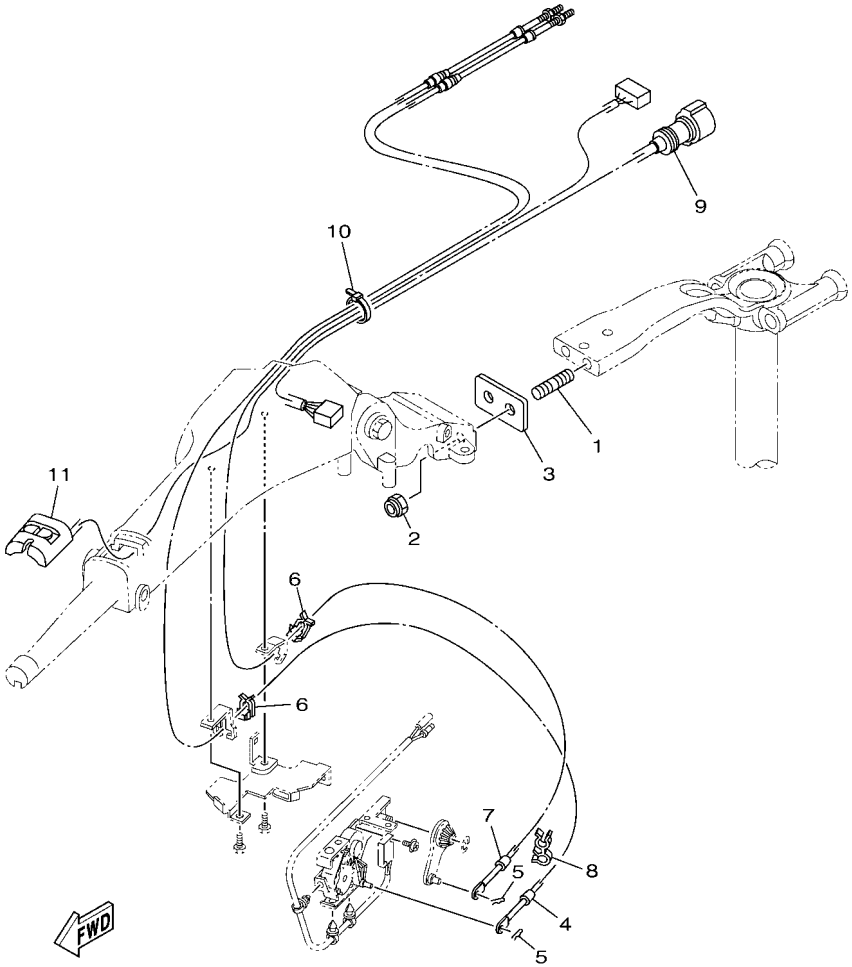

FIG. 36 OPTIONAL PARTS 3

REF. NO.	PART NO.	DESCRIPTION	LA	XA				REMARKS
1	90116–10063	BOLT, STUD	2	2				
2	90185–10027	NUT, SELF-LOCKING	2	2				
3	6EK–42121–00	BRACKET	1	1				
4	6EK–48321–00	CABLE	1	1				
5	90468–10005	CLIP	2	2				
6	63D–48538–00	CLAMP, CABLE 1	2	2				
7	6EK–26301–00	THROTTLE CABLE ASSY	1	1				
8	90464–09M42	CLAMP	1	1				
9	6X4–82586–10	EXT., WIRE HARNESS (L:950MM)	1	1				
10	90465–13M24	CLAMP	1	1				
11	6X4–81860–00	SWITCH ASSY	1	1				

FIG. 37 OPTIONAL PARTS 4

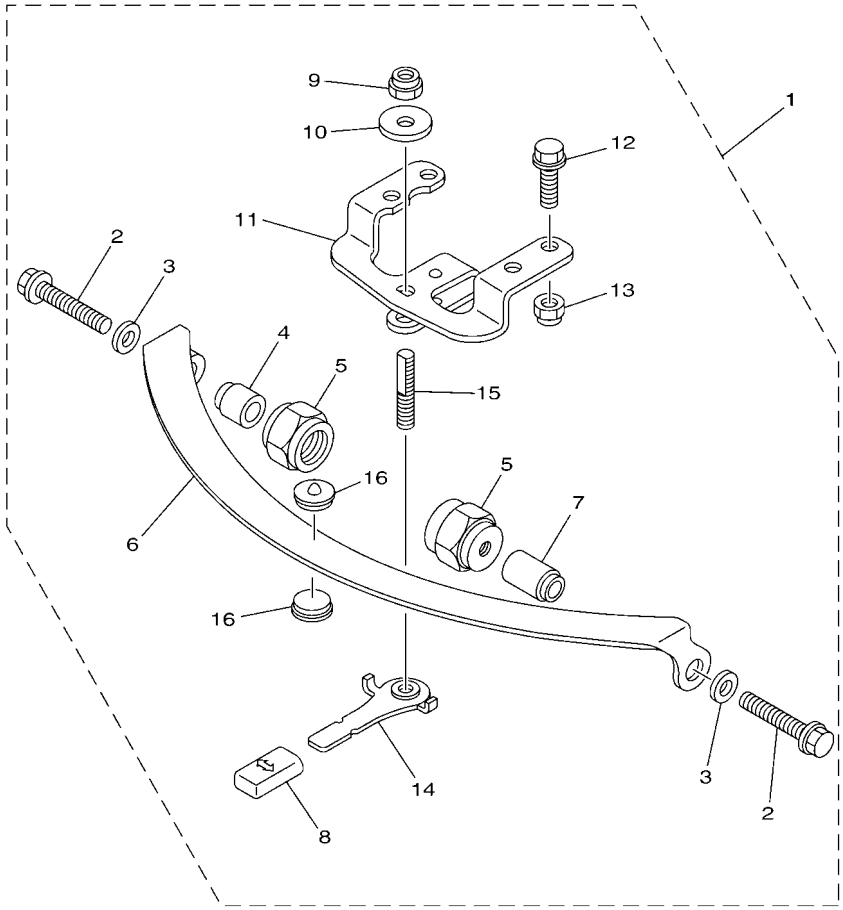

6FP1200-R390

REF. NO.	PART NO.	DESCRIPTION	LA	XA				REMARKS
1	67G–42508–11	STEERING FRICTION ASSY	1	1				
2	90119–08M74	.BOLT, WITH WASHER	2	2				
3	90201–08M01	.WASHER, PLATE	2	2				
4	67G–42541–00	.PIPE 1	1	1				
5	67G–42546–00	.NUT	2	2				
6	63D–42527–00	.PLATE, FRICTION	1	1				
7	67G–42541–10	.PIPE 1	1	1				
8	682–43318–01	.COVER	1	1				
9	90185–10M14	.NUT, SELF-LOCKING	1	1				
10	90201–10M76	.WASHER, PLATE	1	1				
11	6X4–42526–00	.PLATE, FRICTION	1	1				
12	97E95–08525	.BOLT, HEXAGON W/W DEEP RECESS	2	2				
13	90185–08057	.NUT, SELF-LOCKING	2	2				
14	67G–42561–00	.KNOB, STEERING LOCK	1	1				
15	67G–42562–00	.SHAFT, STEERING LOCK	1	1				
16	63D–42528–00	.PLATE, FRICTION	2	2				

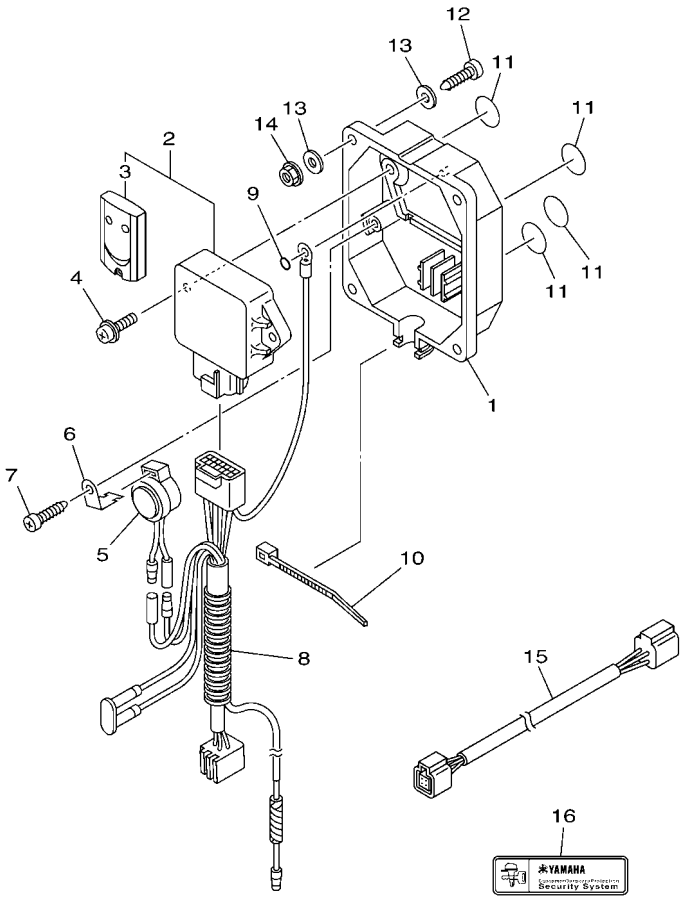

6CJ1100-K370

FIG. 38 OPTIONAL PARTS 5

REF. NO.	PART NO.	DESCRIPTION	LA	XA				REMARKS
1	6Y8–86267–00	CASE COMPLETE 1	1	1				
2	6Y8–86260–12	REMOTE CONTROL UNIT ASSY	1	1				
3	6AA–86261–22	.XMTR. COMP.	2	2				
4	97980–06216	SCREW, WITH WASHER	2	2				
5	6X4–83383–00	BUZZER	1	1				
6	6X4–83386–00	STAY, BUZZER	1	1				
7	97780–60620	SCREW, TAPPING	1	1				
8	6Y8–82509–10	WIRE, SUB LEAD	1	1				
9	93210–04279	O-RING	1	1				
10	90465–11M10	CLAMP	1	1				
11	6Y8–8454G–00	PATCH 1	4	4				
12	90167–06M00	SCREW, TAPPING	4	4				UR
	97880–06035	SCREW, PAN HEAD	4	4				UR
13	90201–06M30	WASHER, PLATE	8	8				
14	95780–06300	NUT, FLANGE	4	4				
15	6Y8–82521–11	2FT PIGTAIL BUS	1	1				
16	6Y8–48277–00	STICKER 1	4	4				

FIG. 39 OPTIONAL PARTS 6

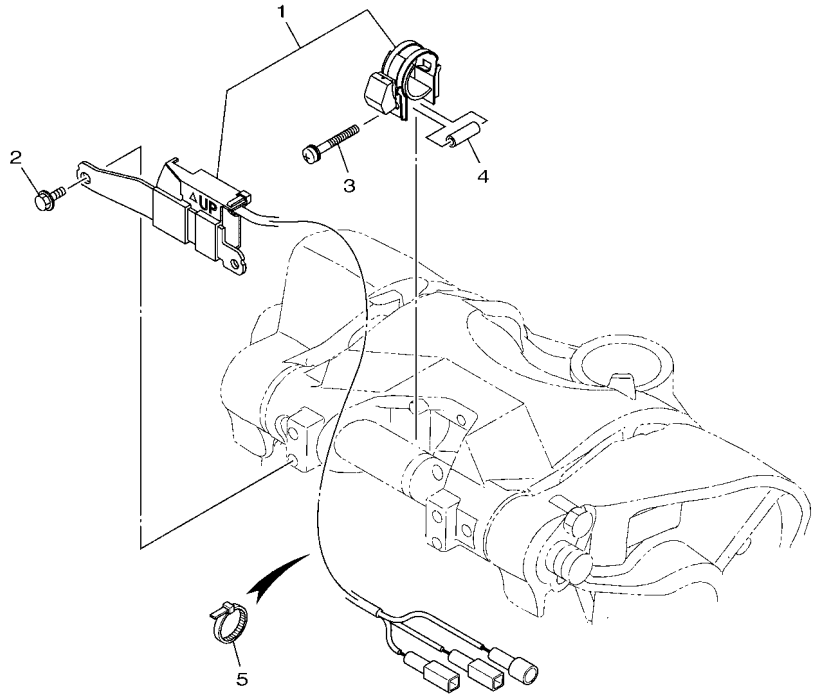

6EK3100-Q390

REF. NO.	PART NO.	DESCRIPTION	LA	XA				REMARKS
1	63P–825E0–01	TILT LIMIT SWITCH ASSY	1	1				
2	97E95–06516	BOLT, HEXAGON W/W DEEP RECESS	2	2				
3	90159–05059	SCREW, WITH WASHER	1	1				
4	90387–05004	COLLAR	1	1				
5	90465–11M10	CLAMP	5	5				

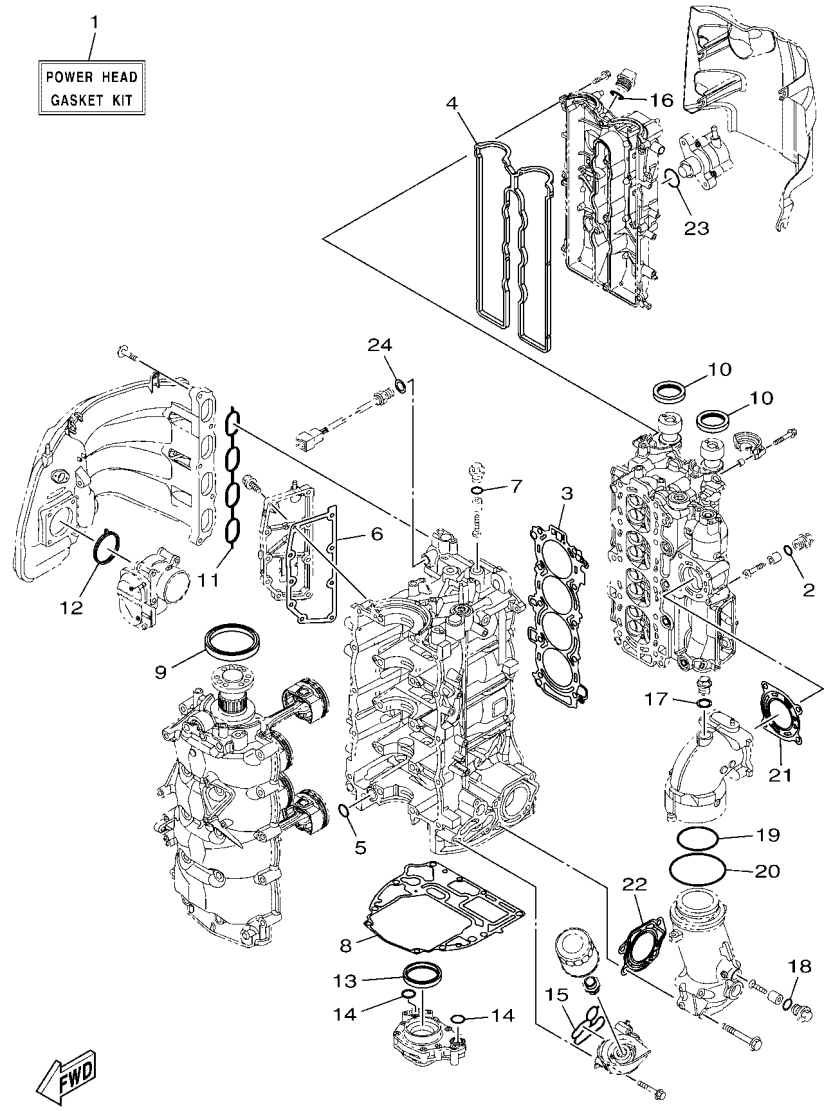

FIG. 40 REPAIR KIT 1

REF. NO.	PART NO.	DESCRIPTION	LA	XA				REMARKS
1	6EK–W0001–01	POWER HEAD GASKET KIT	1	1				
2	93210–13M63	.O-RING	1	1				
3	6EK–11181–00	.GASKET, CYLINDER HEAD 1	1	1				
4	6EK–11193–00	.GASKET, HEAD COVER 1	1	1				
5	93210–19MJ1	.O-RING	1	1				
6	6EK–15353–01	.GASKET, DRAIN	1	1				
7	93210–13M63	.O-RING	1	1				
8	6EK–11351–00	.GASKET, CYLINDER	1	1				
9	93102–85008	.OIL SEAL	1	1				
10	93102–38008	.OIL SEAL	2	2				
11	6EK–13645–00	.GASKET, MANIFOLD 1	1	1				
12	6EK–13646–00	.GASKET, MANIFOLD 2	1	1				
13	69J–11355–00	.SEAL, CYLINDER 1	1	1				
14	93210–19MJ1	.O-RING	2	2				
15	6EK–13475–00	.GASKET	1	1				
16	93210–24M79	.O-RING	1	1				
17	90201–186F1	.WASHER, PLATE	1	1				
18	93210–13M63	.O-RING	1	1				
19	93210–64001	.O-RING	1	1				
20	93210–84001	.O-RING	1	1				
21	6EK–41114–00	.GASKET, EXHAUST OUTER COVER	1	1				
22	6EK–41124–00	.GASKET, EXHAUST OUTER COVER	1	1				
23	93210–30682	.O-RING	1	1				
24	90430–14115	.GASKET	1	1				

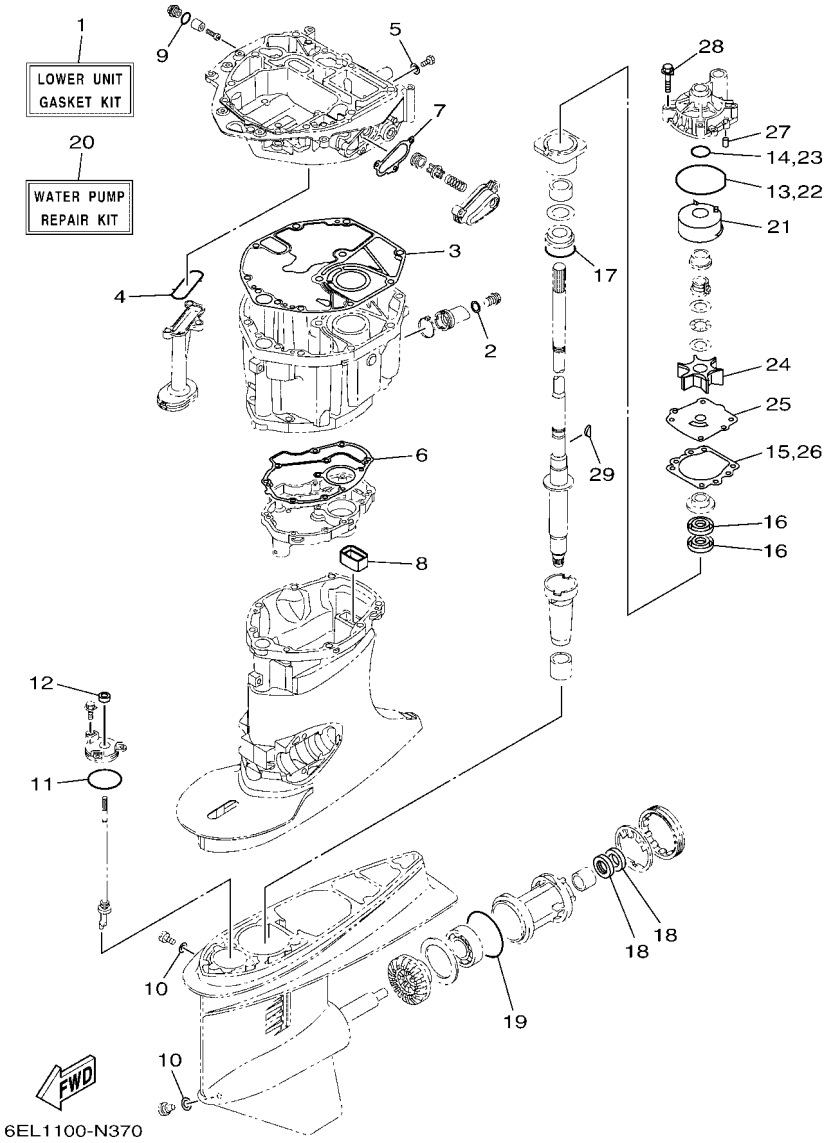

FIG. 41 REPAIR KIT 2

REF. NO.	PART NO.	DESCRIPTION	LA	XA				REMARKS
1	6EK–W0001–20	LOWER UNIT GASKET KIT	1	1				
2	90430–14M09	.GASKET	1	1				
3	6EK–15312–00	.GASKET, OIL PAN	1	1				
4	67F–13415–00	.SEAL, OIL STRAINER	1	1				
5	90430–08143	.GASKET	1	1				
6	6EK–41134–00	.GASKET, EXHAUST MANIFOLD	1	1				
7	6EK–12435–A0	.GASKET	1	1				
8	67F–45127–00	.SEAL	1	1				
9	93210–13M63	.O-RING	1	1				
10	90430–08003	.GASKET	2	2				
11	93210–58144	.O-RING	1	1				
12	93106–09014	.OIL SEAL	1	1				
13	93210–86M38	.O-RING	1	1				
14	93210–37160	.O-RING	1	1				
15	6E5–44315–A0	.GASKET, WATER PUMP	1	1				
16	93101–28M16	.OIL SEAL	2	2				
17	93210–55M14	.O-RING	1	1				
18	93101–30M17	.OIL SEAL	2	2				
19	93210–86M39	.O-RING	1	1				
20	68V–W0078–00	WATER PUMP REPAIR KIT	1	1				
21	61A–44322–02	.INSERT, CARTRIDGE	1	1				
22	93210–86M38	.O-RING	1	1				
23	93210–37160	.O-RING	1	1				
24	6E5–44352–01	.IMPELLER	1	1				
25	6EK–44323–00	.OUTER PLATE, CARTRIDGE	1	1				
26	6E5–44315–A0	.GASKET, WATER PUMP	1	1				
27	93606–12019	.PIN, DOWEL	2	2				

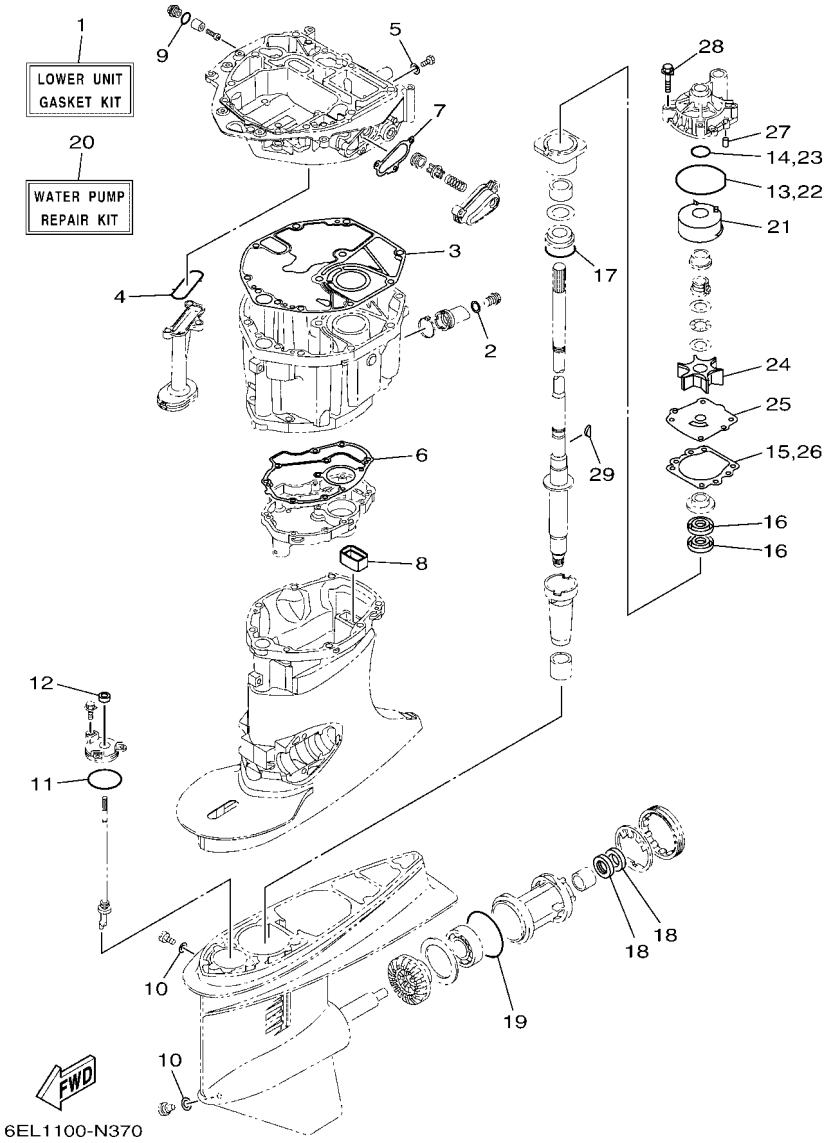

FIG. 41 REPAIR KIT 2

REF. NO.	PART NO.	DESCRIPTION	LA	XA				REMARKS
28	90119–08M14	.BOLT, WITH WASHER	4	4				
29	90280–04M05	.KEY, WOODRUFF	1	1				

PART NO.	REF. NO.
6EM–11110–00–9S	5 – 2
6EK–11119–00	5 – 32
6DA–11133–10	5 – 3
6EK–11168–00	5 – 26
6EK–11181–00	5 – 21
	40 – 3
6EM–11191–00	5 – 25
6EK–11192–00	5 – 30
6EK–11193–00	5 – 28
	40 – 4
6G8–11197–A0	3 – 15
	5 – 13
	12 – 9
	29 – 30
69J–11301–00	5 – 15
6EK–11313–00	3 – 4
6EK–11325–00	1 – 7
	12 – 8
6G8–11325–00	1 – 1
	1 – 4
	1 – 15
	3 – 13
	5 – 11
	29 – 28
63P–11325–01	1 – 2
	3 – 17
67F–11325–01	1 – 5
	5 – 16
67F–11328–00	5 – 17
6EK–11351–00	3 – 25
	40 – 8
69J–11355–00	30 – 14
	40 – 13
6EK–11410–01	4 – 1
6EK–11416–00	4 – 5
6EK–11416–10	4 – 5
6EK–11416–20	4 – 5
6EK–11416–30	4 – 5
6EK–11416–40	4 – 5
6EK–11417–00	4 – 6
6EK–11417–10	4 – 6
6EK–11417–20	4 – 6
6EK–11417–30	4 – 6
6EK–11417–40	4 – 6
6EK–11426–01	4 – 7
6EK–11427–00	4 – 8
6CB–11478–00	4 – 2
6EK–11537–00	6 – 12

PART NO.	REF. NO.
6EK–11567–00	6 – 13
6EK–11590–00	6 – 17
6EK–11603–00	4 – 12
6EK–11604–00	4 – 12
6EK–11631–01–94	4 – 11
6EK–11633–00	4 – 13
6EK–11635–01	4 – 11
6EK–11656–00	4 – 15
6EK–11656–10	4 – 15
6EK–11656–20	4 – 15
6EK–11656–30	4 – 15
6EK–11656–40	4 – 15
6EK–12111–00	6 – 1
30X–12114–00	6 – 4
62Y–12116–00	6 – 3
30X–12117–00	6 – 5
30X–12118–00	6 – 6
51Y–12119–00	6 – 7
6EK–12121–00	6 – 2
6D8–12153–00	6 – 8
6D8–12153–10	6 – 8
6D8–12153–20	6 – 8
6D8–12153–30	6 – 8
6D8–12153–40	6 – 8
6D8–12153–50	6 – 8
6D8–12153–60	6 – 8
6D8–12153–70	6 – 8
6D8–12153–80	6 – 8
6D8–12153–90	6 – 8
6D8–12153–A0	6 – 8
6D8–12153–B0	6 – 8
6D8–12153–C0	6 – 8
6D8–12153–D0	6 – 8
6D8–12153–E0	6 – 8
6D8–12153–F0	6 – 8
6D8–12153–G0	6 – 8
6D8–12153–H0	6 – 8
6D8–12153–J0	6 – 8
6D8–12153–K0	6 – 8
6D8–12153–L0	6 – 8
6D8–12153–M0	6 – 8
6D8–12153–N0	6 – 8
6D8–12153–P0	6 – 8
6D8–12153–R0	6 – 8
6D8–12153–S0	6 – 8
6D8–12153–T0	6 – 8
6D8–12153–U0	6 – 8
6D8–12153–V0	6 – 8

PART NO.	REF. NO.
6EM–12171–00	6 – 9
6EK–12181–00	6 – 10
6EK–12411–00	1 – 6
	3 – 19
6EK–12412–00	3 – 20
6EK–12413–00	3 – 21
6G5–12416–00	29 – 19
6EK–12435–A0	29 – 23
	41 – 7
6EK–1243A–00	3 – 23
6EK–1246A–00–9S	29 – 22
6EK–12483–00	3 – 26
6AW–12572–00	23 – 5
6EK–12576–00	9 – 8
6EK–12577–00	9 – 9
6R3–12581–00	23 – 7
6R3–12582–00	23 – 8
6R3–12583–00	23 – 9
6CB–13016–00	1 – 9
	10 – 5
6AW–13119–00	30 – 12
63P–13131–00	13 – 19
6AW–13132–00	10 – 21
6EK–13152–02	7 – 6
6EK–13160–00	8 – 3
6EK–13161–00	8 – 4
6EK–13300–00	30 – 10
6EK–13329–00	30 – 11
67F–13411–00	30 – 7
67F–13415–00	30 – 9
	41 – 4
6EK–13437–61	15 – 20
5GH–13440–71	1 – 3
	3 – 30
6EK–13446–00	3 – 32
6CB–13473–00	3 – 29
6EK–13475–00	3 – 33
	40 – 15
6EK–13490–00	3 – 28
6EK–13532–00	9 – 1
6AW–13545–10	9 – 11
6EK–13546–00	9 – 16
6EK–13547–00	9 – 19
6EK–13548–01	9 – 22
6AW–13577–10	8 – 7
6CB–13593–00	10 – 18
6EM–13593–00	24 – 32
69J–13631–00	30 – 13

PART NO.	REF. NO.
6EM–13641–00	7 – 9
6EK–13645–00	7 – 10
	40 – 11
6EK–13646–00	7 – 11
	40 – 12
63P–13716–00	10 – 17
69J–13716–00	24 – 31
6EM–13751–00	7 – 1
6EK–13761–00	8 – 5
6AW–13781–00	10 – 25
6AW–13784–00	10 – 28
6CB–13906–01	10 – 8
68V–13907–21	10 – 19
63P–13915–00	1 – 10
	10 – 20
6AW–1410B–00	8 – 6
6X4–14137–00	34 – 25
6DA–14146–00	10 – 10
6EK–14180–02	10 – 1
6EK–14181–00	10 – 11
6EK–14182–00	10 – 2
6P2–14191–00	10 – 12
6AW–14197–00	10 – 31
68V–14216–00	10 – 33
6CB–14216–00	10 – 6
6EM–14291–00	8 – 10
6P2–14386–00	10 – 27
6P2–1441J–00	7 – 17
6DA–14440–00	7 – 16
6CB–1447B–00	10 – 24
6CB–14546–00	10 – 23
6CB–14564–00	10 – 9
63P–14567–00	10 – 16
5PS–14568–00	9 – 2
6K8–14591–10	10 – 14
6EK–14615–10	12 – 1
6EK–14625–00	12 – 6
6EM–1475A–00	9 – 6
6EK–1475F–10	9 – 23
6EM–1475G–00	9 – 25
6EK–1475H–00	10 – 34
6EM–1475H–00	9 – 3
6EK–1475J–00	10 – 35
6CB–14984–00	1 – 11
	10 – 26
6CB–14985–00	10 – 22
6EK–14989–00	9 – 24
6EK–15109–02–9S	3 – 2

PART NO.	REF. NO.
6EK–15311–01	30 – 1
6EK–15312–00	30 – 6
	41 – 3
6EK–15316–00	30 – 18
6EK–15353–01	3 – 11
	40 – 6
6EK–15362–10	30 – 17
6G8–15363–00	5 – 34
6EK–15373–10	7 – 13
6EK–15393–00	7 – 14
6EK–15414–00–9S	3 – 10
6EK–2134X–10	8 – 15
63D–21744–00	9 – 21
6E5–21744–00	9 – 20
6EK–22434–00	27 – 23
6EK–22471–01	27 – 18
68V–24149–00	13 – 27
6EM–2416A–10	9 – 5
6P2–24170–00	8 – 13
6FP–2419E–00	8 – 14
6CB–24217–00	10 – 7
6C5–24251–00	11 – 3
6EK–24311–00	13 – 15
6EK–24314–00	13 – 3
6EK–24330–00	11 – 2
6E5–24351–51	13 – 4
6YK–24360–73	14 – 1
68V–24374–00	13 – 22
6AW–24377–01	13 – 2
688–24378–00	9 – 14
68V–24379–10	10 – 32
6EK–24410–00	13 – 16
68V–24411–00	13 – 21
68V–24412–00	13 – 17
6EK–24413–00	13 – 23
6EK–24414–00	13 – 25
63P–24423–00	13 – 20
68V–24444–00	13 – 26
6EK–24452–00	10 – 13
4SV–24453–00	10 – 29
68V–24454–00	13 – 18
6D8–24469–00	13 – 9
68V–24471–10	13 – 24
6EK–24478–00	10 – 3
6EK–24481–00	10 – 4
6CB–24482–00	10 – 15
6EK–2450B–01	11 – 1
6D8–24519–00	13 – 10

PART NO.	REF. NO.
6EK–24560–00	13 – 5
6D8–24562–00	13 – 8
6D8–24563–00	1 – 12
	13 – 6
6D8–24564–00	1 – 13
	13 – 7
6EK–24566–00	13 – 12
6EK–24568–00	13 – 13
6EK–26301–00	36 – 7
6X4–26367–00	34 – 33
	34 – 36
67F–28100–02	13 – 31
6CB–2812A–00	17 – 24
6EK–41114–00	12 – 14
	40 – 21
6EK–41124–00	12 – 15
	40 – 22
6EK–41134–00	29 – 9
	41 – 6
6EK–41137–01	29 – 1
6X4–41291–00	34 – 7
6X4–42111–02–8D	34 – 1
6X4–42115–00	34 – 21
6X4–42119–01	34 – 4
6EK–42121–00	36 – 3
63D–42121–22–8D	34 – 47
63D–42126–00	34 – 16
6X4–42128–00	34 – 12
6X4–42131–01	34 – 44
6X4–42137–00	34 – 6
6X4–42159–00	34 – 38
6X4–42177–00	34 – 5
6BG–42384–00	23 – 3
67G–42508–11	37 – 1
6EK–42510–00–8D	26 – 6
6EK–42510–10–8D	26 – 6
6X4–42526–00	37 – 11
63D–42527–00	37 – 6
63D–42528–00	37 – 16
67G–42541–00	37 – 4
6EK–42541–00	23 – 10
67G–42541–10	37 – 7
6EM–42542–00	12 – 18
67G–42546–00	37 – 5
67G–42561–00	37 – 14
67G–42562–00	37 – 15
6EM–42610–00	2 – 1
6EK–42615–01	2 – 14

PART NO.	REF. NO.
6EK–42617–00	15 – 12
6EK–4261A–00	2 – 2
6EK–42646–00	2 – 4
6EK–42647–00	2 – 5
6EK–42662–00	2 – 13
68F–42663–00	2 – 12
6EK–42675–00	2 – 18
6EK–42676–00	2 – 20
6EM–42677–00	2 – 16
6EM–42678–00	2 – 17
6D6–42681–00	2 – 19
6DA–42697–00	2 – 15
6EK–42710–01	22 – 1
648–42715–00	24 – 26
6EK–42716–00	22 – 27
67F–42717–00	22 – 23
6EK–42725–00	22 – 17
6X4–42725–01	34 – 46
6AH–42726–00	23 – 11
6H1–42726–30	23 – 1
6EK–42727–00	29 – 6
6EK–42728–00	22 – 16
6X4–42728–10	34 – 56
6EK–42741–00–8D	23 – 18
6H4–42748–00	22 – 22
68F–42753–00	22 – 19
6CB–42761–00	22 – 20
6EK–42769–00	29 – 17
6EE–42794–40	22 – 28
6EE–42794–50	22 – 29
6EK–42815–01–8D	22 – 5
6EK–42816–01–8D	22 – 6
6CB–42818–00	22 – 11
6X4–42821–00	34 – 29
6EK–43111–00–8D	25 – 1
6EK–43112–00–8D	25 – 2
6EK–43126–00	25 – 27
64E–43131–30	25 – 9
64E–43139–11	26 – 3
66T–43144–00	22 – 14
	25 – 21
6E5–43145–01	33 – 7
6G5–43148–00	25 – 18
6EK–43181–00	25 – 15
6EK–43185–00	25 – 16
6EK–43311–00–8D	25 – 5
6EK–43311–10–8D	25 – 5
682–43318–01	37 – 8

PART NO.	REF. NO.
6EK–43800–02	27 – 1
6EK–43804–11	28 – 3
6EK–43805–01	28 – 2
6EK–4380F–00	28 – 6
6C5–4380G–00	27 – 33
6EK–4380K–02	27 – 29
6EK–4380P–00	27 – 10
6EK–4380R–00	27 – 7
6EK–43810–00	27 – 2
6EK–43811–00	27 – 9
6H1–43812–00	27 – 3
6C5–43816–00	27 – 32
6C6–43817–00	27 – 30
6EK–43818–00	25 – 31
6EK–4381B–00	27 – 20
6EK–43821–00	27 – 4
6EK–43829–00	27 – 26
6EK–4382E–00	27 – 39
6D8–4382L–00	27 – 62
6EK–43830–00	27 – 35
6EK–43831–00	27 – 63
6D8–43841–00	27 – 55
6D8–43843–00	27 – 50
6D8–43844–00	27 – 48
6H1–43844–10	27 – 59
6EK–43845–00	27 – 66
69A–4384F–00	27 – 56
6H1–4384G–11	27 – 58
62X–4384H–00	27 – 22
	27 – 28
6D8–4384M–00	27 – 37
6D8–43851–00	27 – 45
6C6–43853–00	27 – 41
6C5–43854–00	27 – 52
6C5–43855–10	27 – 46
6EK–43856–00	27 – 49
6D8–43861–00	27 – 6
	27 – 8
6EK–43861–00	27 – 5
6H1–43862–00	27 – 11
	27 – 15
6D8–43863–00	27 – 64
67F–43865–00	27 – 14
62X–4386K–00	28 – 7
6EK–43875–00	27 – 19
6H1–43875–00	27 – 65
63P–43879–10	28 – 8
6C6–4387G–00	27 – 42

PART NO.	REF. NO.
6EK–43880–11	27 – 68
	28 – 1
6EK–43881–11	28 – 10
6EK–43882–00	28 – 11
6H1–43883–00	27 – 38
6EK–43892–00	28 – 4
6C5–43895–00	27 – 51
6EK–43899–00	27 – 21
69J–4389J–00	27 – 31
	27 – 36
6X4–44100–01	34 – 20
6X4–44102–00	34 – 22
6EK–44117–01	24 – 8
6EK–44118–00	24 – 22
6EK–44120–01	24 – 17
6EK–44120–11	24 – 17
6EK–44121–00	24 – 15
63P–44122–00	24 – 12
6X4–44132–00	34 – 24
6X4–44139–01	34 – 8
6E5–44150–03	31 – 17
6X4–44159–A0–8D	34 – 39
6X4–44173–00	34 – 40
6X4–44177–00	34 – 11
6X4–44188–00	34 – 14
6X3–44191–00	34 – 42
61A–44311–01	31 – 23
6E5–44312–00	32 – 18
6E5–44315–A0	31 – 30
	41 – 15
	41 – 26
61A–44322–02	31 – 24
	41 – 21
6EK–44323–00	31 – 29
	41 – 25
6E5–44352–01	31 – 27
	41 – 24
6E5–44365–00	32 – 17
6EK–44365–01	32 – 3
6E5–44366–00	32 – 1
6EK–44379–00	32 – 4
6P2–44391–00	23 – 4
	23 – 13
6EK–44514–00	26 – 23
6EK–44526–00	26 – 26
6EK–44536–00	25 – 37
6EK–44551–00–8D	26 – 12
6EK–44553–00–8D	26 – 21

PART NO.	REF. NO.
63P–44555–00	26 – 15
61A–44575–00	26 – 14
6EK–45111–00–8D	29 – 11
6EK–45111–10–8D	29 – 11
67F–45127–00	29 – 25
	41 – 8
6EK–45135–00	29 – 26
6C5–45155–00	29 – 18
6EK–45181–01	29 – 10
688–45214–02	32 – 10
688–45215–02	32 – 11
6H1–45251–03	1 – 14
	25 – 35
6EM–45300–02–8D	31 – 1
6EM–45300–12–8D	31 – 1
6E5–45301–07–8D	31 – 2
6EK–45318–00	29 – 27
6E5–45321–00	31 – 13
6E5–45331–00–9S	31 – 33
6E5–45332–00–CA	31 – 55
688–45341–10	31 – 7
6E5–45344–00	31 – 39
6E5–45371–01	1 – 18
	32 – 14
688–45375–00	32 – 9
663–45376–00	32 – 8
6E5–45378–00	31 – 10
688–45383–02	31 – 65
688–45384–02	31 – 66
6EK–45501–00	31 – 41
6EK–45501–10	31 – 41
61A–45527–00	31 – 22
6E5–45536–00	31 – 9
61A–45538–00	31 – 19
6EM–45551–00	31 – 42
6EM–45560–00	31 – 44
6E5–45567–01	31 – 5
6E5–45567–10	31 – 5
6E5–45567–20	31 – 5
6E5–45567–30	31 – 5
6E5–45567–40	31 – 5
6E5–45567–50	31 – 5
6E5–45567–60	31 – 5
68V–45571–00	31 – 57
6E5–45576–00	31 – 58
6L6–45577–00	31 – 62
6L6–45577–10	31 – 62
6L6–45577–20	31 – 62

PART NO.	REF. NO.
6L6–45577–30	31 – 62
6L6–45577–40	31 – 62
6L6–45577–50	31 – 62
6L6–45577–60	31 – 62
6E5–45587–01	31 – 36
6E5–45587–10	31 – 36
6E5–45587–20	31 – 36
6E5–45587–30	31 – 36
6E5–45587–40	31 – 36
6E5–45587–50	31 – 36
6E5–45587–60	31 – 36
6E5–45611–01	31 – 46
68V–45631–02	31 – 53
6E5–45633–01	31 – 54
6E5–45634–02	31 – 47
63P–45987–00	32 – 19
688–45997–01	32 – 20
6X4–47731–01	34 – 23
703–48129–00	34 – 28
6X4–48154–00	34 – 17
6X4–48215–00	34 – 3
6X4–48261–00	34 – 26
6Y8–48277–00	38 – 16
6EK–48321–00	36 – 4
6E5–48344–00	24 – 6
	24 – 28
6EK–48531–01	24 – 1
6EK–48532–00	24 – 2
63D–48538–00	36 – 6
6EK–48538–00	24 – 4
6X4–48538–00	34 – 32
6X4–48538–10	34 – 35
6EK–61350–00	33 – 1
6E5–61355–00	33 – 2
6EK–8132G–00	15 – 17
6EK–81337–00	15 – 11
6EK–81410–00	15 – 3
6EM–81800–01	21 – 1
69J–81801–11	21 – 5
6CB–81807–00	21 – 8
6CB–81809–00	21 – 14
67F–81810–00	21 – 3
67F–81813–00	21 – 6
6CB–81820–00	21 – 7
67F–81821–00	21 – 11
6EK–81822–01	18 – 4
6EK–81823–00	18 – 6
6CB–81826–00	21 – 22

PART NO.	REF. NO.
69J–81828–00	21 – 23
67F–81830–00	21 – 16
6CB–81832–00	21 – 9
6CB–81836–00	21 – 10
6C5–81839–00	21 – 19
67F–8183R–00	21 – 13
60V–8183T–00	21 – 17
69J–81840–11	21 – 4
67F–81841–00	21 – 12
6CB–81842–00	21 – 18
67F–81846–00	21 – 24
67F–81850–00	21 – 2
6X4–81860–00	36 – 11
6C5–81869–00	21 – 21
67F–81891–00	21 – 15
6EM–81919–10	17 – 27
60V–81925–00	18 – 2
6EM–81941–00	21 – 20
6X4–81942–01	35 – 13
6EK–81942–10	17 – 10
6EM–81948–01	16 – 3
63P–81950–00	17 – 1
6EK–81952–10	17 – 5
6EK–81960–10	19 – 7
6EK–81975–01	19 – 8
6EK–81980–00	20 – 4
6EE–81994–40	15 – 21
6EE–81994–50	15 – 22
6AH–81996–00	22 – 30
68V–82105–01	18 – 9
6P2–82113–00	17 – 25
682–82119–01	17 – 2
6D8–82148–00	25 – 24
6E5–82148–00	25 – 3
66K–82149–00	25 – 8
68V–82149–30	25 – 8
6CB–82151–00	17 – 19
6FP–82151–00	17 – 18
6CB–82151–10	17 – 20
6CB–82151–20	17 – 21
6CB–82151–30	17 – 22
6EM–82170–10	17 – 17
6EK–82181–00	28 – 5
6P2–82310–01	19 – 1
6A0–82317–00	15 – 14
6EM–82388–00	19 – 3
6EM–82389–00	19 – 4
6EK–82398–00	12 – 20

PART NO.	REF. NO.
68V–82504–00	20 – 16
6Y8–82509–10	38 – 8
6X4–82510–01	35 – 1
6Y8–82521–11	38 – 15
703–82532–00	35 – 3
6X4–82540–00	34 – 27
6DA–82553–00	20 – 22
6EK–82553–10	20 – 30
682–82556–00	35 – 6
69J–82563–01	20 – 17
6X4–82563–01	35 – 8
69W–82575–00	35 – 5
676–82577–01	35 – 2
6C5–8257V–00	16 – 7
689–8257Y–00	35 – 7
68F–82582–00	18 – 3
6Y8–82582–11	20 – 2
6X4–82586–10	36 – 9
69J–82587–00	20 – 18
6E5–82588–00	22 – 24
61A–82588–01	24 – 9
6EM–82590–10	20 – 1
688–82594–00	22 – 26
6EM–82599–00	20 – 3
60V–8259F–00	24 – 27
63P–825E0–01	39 – 1
6X4–83383–00	35 – 10
	38 – 5
6X4–83386–00	35 – 11
	38 – 6
6E5–83558–00	23 – 16
6E5–83558–10	31 – 12
69J–83614–00	20 – 19
67H–83672–01	26 – 1
68F–83688–10	7 – 4
6Y8–8454G–00	38 – 11
6P2–85075–00	20 – 27
68F–85119–00	16 – 6
	17 – 8
6CB–85544–10	17 – 23
689–85547–00	13 – 1
6EK–85548–00	16 – 9
6EK–85561–00	15 – 5
60V–85564–00	16 – 4
	17 – 6
6CB–85580–00	15 – 4
6CJ–85780–00	20 – 21
6CJ–85790–00	20 – 14

PART NO.	REF. NO.
6P2–85896–00	20 – 26
6EM–8591A–10	16 – 1
6C5–86120–00	8 – 1
6Y8–86260–12	38 – 2
6AA–86261–22	38 – 3
6Y8–86267–00	38 – 1
6EM–8A410–00	24 – 30
K1C–A3275–00	4 – 10
7BB–G3861–00	27 – 17
6EK–W0001–01	40 – 1
6EK–W0001–20	41 – 1
68V–W0078–00	1 – 19
	41 – 20
6EM–W009A–01–9S	5 – 1
6EK–W009B–12–9S	3 – 1
6EK–W1165–00	4 – 9
6EK–W4624–00	6 – 16
6EK–W8145–01	15 – 1
6EK–W9010–00	15 – 2
90101–12014	34 – 48
90101–12065	25 – 40
	25 – 40
90101–12066	25 – 40
90105–06037	3 – 12
	5 – 24
90105–06039	2 – 6
90105–06151	3 – 34
	30 – 15
90105–06208	13 – 30
90105–06M07	5 – 18
90105–06M08	8 – 8
90105–06M14	18 – 10
90105–08170	3 – 8
90105–08186	7 – 3
90105–08220	12 – 17
90105–08247	12 – 16
90105–08248	18 – 8
90105–08M87	8 – 12
90105–10M00	32 – 15
90105–14007	26 – 25
90105–14013	26 – 18
90109–06286	3 – 22
90109–06292	30 – 8
90109–06316	22 – 21
90109–06M81	22 – 25
	24 – 3
90109–06M86	20 – 20
	22 – 15

PART NO.	REF. NO.
90109–08240	18 – 5
90111–05037	7 – 5
90111–08078	2 – 7
90116–10063	36 – 1
90119–06126	24 – 33
90119–06269	8 – 9
90119–06M10	31 – 16
90119–06M17	8 – 18
90119–06M81	25 – 36
90119–07234	5 – 8
90119–07235	5 – 6
90119–08022	7 – 8
90119–08187	22 – 2
90119–08M14	31 – 32
	41 – 28
90119–08M74	37 – 2
90119–10007	29 – 13
90119–10050	6 – 14
90119–10054	25 – 34
90119–10057	3 – 7
90119–10058	26 – 22
90119–10M89	32 – 7
90149–10072	5 – 23
90151–06M02	3 – 18
90152–05007	34 – 9
90152–05M07	32 – 12
90159–05059	26 – 4
	39 – 3
90159–06053	23 – 22
90159–06M28	23 – 20
90167–06M00	38 – 12
90169–05M00	17 – 11
90170–09M03	33 – 3
90170–16M01	31 – 43
90171–18M04	32 – 22
90176–14002	26 – 19
	26 – 28
90179–08003	18 – 1
90183–061A8	23 – 21
90185–05002	32 – 13
90185–08057	37 – 13
90185–09M01	33 – 5
90185–10027	36 – 2
90185–10M14	37 – 9
90185–12M12	34 – 55
90185–22M11	25 – 12
90201–06M30	38 – 13
90201–08M01	37 – 3

PART NO.	REF. NO.
90201–10060	25 – 33
90201–10081	33 – 9
90201–10M20	33 – 6
90201–10M76	37 – 10
90201–11008	24 – 20
90201–12035	34 – 52
90201–12426	25 – 42
90201–13M01	25 – 41
90201–156J2	22 – 8
90201–16M55	26 – 17
90201–186F1	5 – 5
	12 – 3
	40 – 17
90201–22M01	31 – 20
90201–26M59	25 – 11
90201–30M92	31 – 63
90201–38M60	26 – 8
90202–08M20	24 – 13
90202–32M19	26 – 16
90202–40M47	26 – 11
90206–12M22	34 – 50
90206–15M18	22 – 9
90206–22M19	31 – 21
90249–06M19	25 – 20
90250–08M07	31 – 52
90280–04M05	31 – 28
	41 – 29
90282–04010	31 – 64
90338–08174	26 – 7
90340–08002	31 – 6
90340–14M06	5 – 9
	30 – 3
90340–18M09	5 – 4
	12 – 2
90383–20001	25 – 32
90386–06M12	24 – 16
90386–08032	34 – 15
90386–10001	24 – 19
90386–10M16	25 – 17
90386–12003	34 – 53
90386–15M73	22 – 7
90386–18001	25 – 29
90386–18M35	25 – 28
90386–25M31	25 – 10
90386–26MA3	34 – 43
90386–38M32	26 – 10
90387–05004	39 – 4
90387–06119	15 – 13

PART NO.	REF. NO.
90387–06176	16 – 5
	17 – 7
90387–06289	8 – 17
90387–06M43	23 – 24
90387–07046	2 – 3
90387–08M37	22 – 4
90387–08M45	2 – 10
90387–10094	2 – 8
90387–10M42	33 – 4
90387–12M02	34 – 51
90401–20007	3 – 31
90430–06M03	5 – 19
90430–08003	1 – 17
	31 – 8
	41 – 10
90430–08143	12 – 5
	29 – 3
	41 – 5
90430–14115	5 – 10
	20 – 15
	40 – 24
90430–14M09	1 – 16
	30 – 4
	41 – 2
90440–16001	32 – 2
90440–16002	32 – 2
90445–073F9	23 – 14
90445–07ME8	31 – 11
90445–07ME9	31 – 11
90464–07209	8 – 19
90464–07259	23 – 15
90464–08004	17 – 15
90464–08M07	35 – 4
90464–09129	12 – 22
90464–09M42	36 – 8
90464–10M32	17 – 14
90464–10M57	9 – 13
90464–11012	9 – 7
90464–12006	9 – 4
90464–12009	11 – 6
90464–12010	9 – 26
90464–12012	11 – 8
90464–12183	12 – 23
	17 – 16
90464–12224	11 – 7
90464–13249	15 – 10
	19 – 5
90464–16001	9 – 18

PART NO.	REF. NO.
90464–16001	20 – 10
	20 – 23
	20 – 24
	20 – 31
90464–18004	20 – 7
	20 – 8
	20 – 32
90464–20258	22 – 18
90464–21002	7 – 21
90464–26001	7 – 20
	20 – 9
90464–99004	7 – 18
90465–08M63	25 – 7
90465–11M10	3 – 27
	9 – 10
	9 – 12
	9 – 15
	9 – 17
	11 – 4
	12 – 19
	13 – 11
	13 – 29
	23 – 2
	23 – 12
	23 – 17
	25 – 14
	26 – 5
	32 – 16
	38 – 10
	39 – 5
90465–11M52	17 – 13
90465–11M59	3 – 24
	20 – 29
	30 – 19
90465–12M56	17 – 28
90465–13M18	20 – 5
	20 – 25
	25 – 26
90465–13M24	36 – 10
90465–13M76	17 – 12
90465–13M97	15 – 7
90467–120A7	11 – 5
90467–23M16	7 – 15
90468–10005	36 – 5
90468–18008	24 – 7
	24 – 14
	24 – 29
90468–180A0	24 – 21

PART NO.	REF. NO.
90480–06M19	15 – 19
90480–10M23	8 – 16
90480–12314	5 – 31
	15 – 16
90480–13M24	23 – 23
90480–20M05	29 – 21
90480–22M15	22 – 3
90501–12082	24 – 25
90501–16M37	31 – 48
90501–200A2	29 – 20
90501–23215	34 – 13
90506–14M24	25 – 23
90506–22001	22 – 13
91312–06035	15 – 9
91318–03005	27 – 61
91318–03025	27 – 60
91318–05030	27 – 53
91318–05045	27 – 34
91380–06025	27 – 67
91490–20010	34 – 10
	34 – 19
91490–40030	32 – 23
91609–16012	27 – 12
91690–30010	24 – 5
91690–30020	25 – 19
91690–50014	7 – 12
	12 – 13
91809–08006	5 – 7
92903–08100	18 – 12
92990–08600	2 – 9
92990–12200	34 – 49
92990–12600	34 – 54
92990–18200	32 – 21
92995–14600	26 – 20
	26 – 27
93101–28M16	31 – 34
	41 – 16
93101–30M17	31 – 60
	41 – 18
93102–38008	6 – 15
	40 – 10
93102–85008	4 – 4
	40 – 9
93106–09014	31 – 15
	41 – 12
93210–04279	38 – 9
93210–04N51	27 – 43
93210–064A5	27 – 44

PART NO.	REF. NO.
93210–09165	24 – 18
	27 – 25
93210–13M63	3 – 16
	5 – 14
	12 – 10
	22 – 10
	29 – 31
	40 – 2
	40 – 7
	40 – 18
	41 – 9
93210–16275	33 – 8
93210–19MJ1	3 – 9
	30 – 16
	40 – 5
	40 – 14
93210–207A0	3 – 5
93210–24M79	5 – 35
	40 – 16
93210–30682	13 – 28
	40 – 23
93210–37160	31 – 26
	41 – 14
	41 – 23
93210–37MH7	26 – 9
93210–554A9	28 – 12
93210–55M14	31 – 38
	41 – 17
93210–58144	31 – 14
	41 – 11
93210–64001	12 – 11
	40 – 19
93210–68N50	27 – 27
93210–84001	12 – 12
	40 – 20
93210–86M38	31 – 25
	41 – 13
	41 – 22
93210–86M39	31 – 61
	41 – 19
93306–208U0	31 – 56
93315–425U7	31 – 45
93315–430U8	31 – 59
93315–628U9	31 – 3
93317–330U2	31 – 35
93332–000U7	31 – 4
93341–930V2	31 – 37
93410–18M05	25 – 30

PART NO.	REF. NO.
93410–37M04	26 – 13
93450–19052	4 – 14
93501–04M02	24 – 24
93501–08001	27 – 47
93503–16003	27 – 16
	31 – 51
93505–32038	27 – 13
	27 – 40
93507–32009	31 – 49
93511–32017	31 – 50
93604–26256	27 – 54
93605–10108	6 – 11
93606–12019	3 – 6
	4 – 3
	29 – 8
	29 – 16
	30 – 5
	31 – 31
	41 – 27
93606–19M23	3 – 3
93608–12M05	29 – 5
	32 – 5
93700–06002	25 – 6
	34 – 2
94702–00437	1 – 8
	5 – 36
95333–08600	18 – 11
95380–06600	8 – 2
	23 – 19
	34 – 18
95380–12600	25 – 43
95780–06300	38 – 14
95780–08300	2 – 11
95812–08030	18 – 7
95D75–06025	7 – 7
	7 – 19
95D75–06040	24 – 11
95D75–08040	5 – 20
95D75–08060	7 – 2
95D75–10060	26 – 24
95D95–06010	25 – 39
95D95–06012	12 – 21
	19 – 6
95D95–06016	13 – 14
	15 – 18
	17 – 9
	20 – 28
95D95–06020	19 – 2

PART NO.	REF. NO.
95D95–06025	29 – 24
95D95–06030	5 – 29
	15 – 8
	15 – 15
	24 – 23
	29 – 7
95D95–08012	22 – 12
95D95–08020	5 – 33
97595–05516	15 – 6
97602–04316	28 – 9
97607–04208	5 – 27
97780–50620	17 – 26
97780–60520	23 – 6
97780–60620	16 – 8
	16 – 10
	38 – 7
97780–60920	34 – 41
97880–06012	25 – 4
97880–06035	38 – 12
97980–06216	35 – 9
	38 – 4
97985–04116	24 – 10
97985–04308	20 – 6
97985–06216	26 – 2
	34 – 45
97D95–06010	25 – 22
97D95–06014	34 – 34
	34 – 37
	35 – 12
97D95–08014	12 – 4
	29 – 2
97E75–08535	29 – 12
97E75–10545	29 – 4
	29 – 14
	29 – 15
	30 – 2
97E95–06510	25 – 25
97E95–06512	20 – 13
97E95–06516	20 – 11
	20 – 12
	39 – 2
97E95–06520	16 – 2
	17 – 4
97E95–06530	19 – 9
	34 – 31
97E95–06610	17 – 3
97E95–06616	25 – 38
97E95–08520	25 – 13

PART NO.	REF. NO.
97E95–08525	31 – 40
	37 – 12
97E95–08540	34 – 30
97E95–10545	32 – 6
98507–04008	10 – 30
98780–05025	12 – 7
98980–05025	3 – 14
	5 – 12
	29 – 29
99001–08600	31 – 18
99002–03600	27 – 57
99009–47500	27 – 24
99530–14016	5 – 22
99590–10114	8 – 11

PART NO.	REF. NO.