YAMAHA

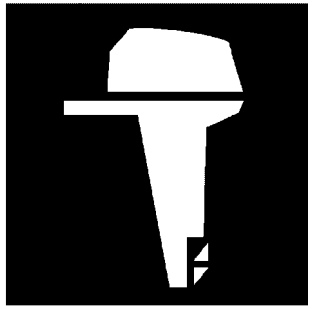

PARTS CATALOGUE
CATALOGUE DE PIECES DETACHEES

F300BET'20 (6CEB)
FL300BET'20 (6CFB)

YAMAHA
GENUINE
Parts & Accessories

1U6CE-300FA

( )

F300BET/FL300BET
PARTS CATALOGUE
©2025 by Yamaha Motor Co., Ltd.
1st edition, March 2025
All rights reserved.
Any reprinting or unauthorized use
without the written permission of
Yamaha Motor Co., Ltd.
is expressly prohibited.
Printed in Japan.

F300BET/FL300BET
CATALOGUE DE PIECES DETACHEES
©2025 par Yamaha Motor Co., Ltd.
1re édition, mars 2025
Tous droits réservés
Toute réimpression ou utilisation
non autorisée sans la permission écrite
de Yamaha Motor Co., Ltd.
est formellement interdite.
Imprimé au Japon

FOREWORD

This Parts Catalogue is related to the parts for the model(s) on the cover page. When you are ordering replacement parts, please refer to this Parts Catalogue and quote both part numbers and part names correctly.

1. Modifications or additions which have been made after the issue of the Parts Catalogue will be announced in the Parts News.
   It is advisable that you make the necessary corrections to the Parts Catalogue according to the Parts News.

2. Abbreviations
   The following abbreviations are used in this Parts Catalogue.
   "UR" Use specified parts number.
   "UN" Use as many as needed.
   "AP" Alternate Parts
   "LM" Locally Made (Parts need to be ordered locally)
   "F#" Frame No. (Applicable machine No.)
   "O/S" Over Size

3. The number of components for assembly
   - Parts, which are to be supplied in an assembly, are listed with a dot (.) in front of the part name as shown below.
   - The numeral appearing to the right of each component part indicates the quantity of parts for each assembly unit.

PART NO.	DESCRIPTION	Q'TY	REMARKS
2F5–83310–60	FRONT FLASHER LIGHT ASSY	2	
115–83311–60	.BULB (6V–18W)	1	

4. Applicable colours of graphics are represented in the "REMARKS" as shown below.

PART NO.	DESCRIPTION	Q'TY	REMARKS
2N4–24110–00–X5	FUEL TANK COMP.	2	MXR
3J1–24240–10	.GRAPHIC, FUEL TANK	1	FOR MXR

5. Note that the illustrations for reference in finding parts numbers are not to be used for assembling. When assembling, please use the applicable service manual.

6. The asterisk (*) before a reference number indicates modified items after the first edition.

7. Applicable Serial No.
   Engine Serial No.

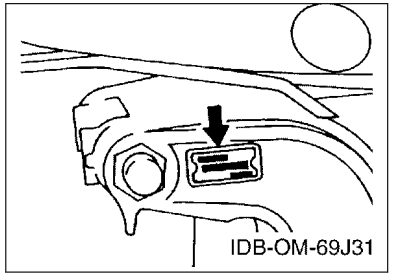

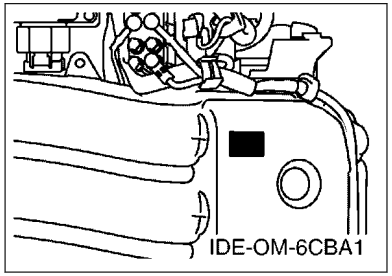

8. Applicable Engine Starting Serial No.

Model	Serial No.	Model	Serial No.
F300B	6CE-1073078	FL300B	6CF-1019273

9. Applicable Colour Code

Abbreviation	Colour Name	Colour Code
DBN1	DARK BLUISH GRAY 1	008D

10. Quantity Column Information

Column No.	Name Of Q'ty Column	Applicable Model
1	ET	F300BET
2	ET1	F300BET1
3	ET2	F300BET2
4	LET	FL300BET
5	LET1	FL300BET1

AVANT–PROPOS

Ce catalogue de pièces détachées concerne les pièces pour le(s) modèle(s) indiqué(s) sur la page de couverture. Lorsque vous commandez des pièces de rechange, veuillez vous référer à ce catalogue de pieces détachées et indiquer clairement les numéros et les noms des pièces détachées.

1. Les modifications ou ajouts ayant été effectués après la parution du catalogue de pièces détachées seront décrits dans les Bulletins d'information concernant les pièces détachées.
   Il est recommandé que vous apportiez les corrections nécessaires au catalogue des pièces détachées en vous référant aux Bulletins d'information.

2. Abréviations
   Dans ce catalogue, les abréviations suivantes sont utilisées:
   "UR" Utiliser le numéro de pièces spécifié.
   "UN" Utiliser autant que nécessaire.
   "AP" Pièces de substitution
   "LM" Fabrication locale (les pièces doivent être commandées localement.)
   "F#" N° de cadre (applicable au N° de série)
   "O/S" Surdimensionné

3. Nombre de pièces d'un assemblage
   - Les pièces fournies comme composants d'un assemblage sont précédées d'un point (.) de la manière indiquée ci–dessous.
   - Le chiffre apparaissant à la droite de chaque composant indique la quantité de pièces pour chaque unité d'assemblage.

N° PIECES	DESCRIPTION	QTE	REMARQUES
2F5–83310–60	ENS. CLIGNOTANT AVANT	2	
115–83311–60	.AMPOULE (6V–18W)	1	

4. Les couleurs concernant les graphiques sont indiquées dans la colonne "REMARQUES", comme indiqué ci–dessous.

N° PIECES	DESCRIPTION	QTE	REMARQUES
2N4–24110–00–X5	RESERVOIR A ESSENCE.	2	MXR
3J1–24240–10	.GRAPHIQUE	1	POUR MXR

5. Veuillez noter que les illustrations sont indiquées à titre de référence pour trouver les numéros de pièces, non pour être utilisées lors de l'assemblage. Lors de l'assemblage, veuillez utiliser le manuel d'entretien adéquat.

6. L'astérisque (*) placé devant un numéro de référence indique des éléments qui ont été modifiés après la première édition.

7. N° de série applicable
   N° de Série du moteur

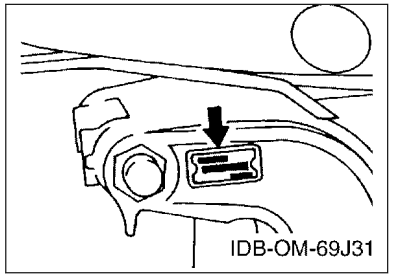

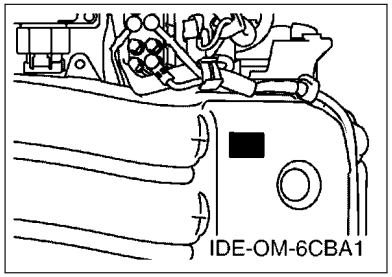

8. N° de série initial du moteur applicable

Modèle	N° de série	Modèle	N° de série
F300B	6CE-1073078	FL300B	6CF-1019273

9. Code couleur applicable

Abréviation	Nom de la couleur	Code couleur
DBN1	DARK BLUISH GRAY 1	008D

10. Informations relatives à la colonne Quantité

N° de la colonne	Nom de la colonne Qté	Modèle applicable
1	ET	F300BET
2	ET1	F300BET1
3	ET2	F300BET2
4	LET	FL300BET
5	LET1	FL300BET1

CONTENTS

SCHEDULED SERVICE PARTS....1
TOP COWLING 1....2
TOP COWLING 2....4
CYLINDER & CRANKCASE 1....5
CRANKSHAFT & PISTON....7
CYLINDER & CRANKCASE 2....8
CYLINDER & CRANKCASE 3....10
CYLINDER & CRANKCASE 4....11
VALVE....12
INTAKE 1....15
INTAKE 2....16
THROTTLE BODY ASSY 1....18
THROTTLE BODY ASSY 2....19
FUEL INJECTION PUMP 1....20
FUEL INJECTION PUMP 2....22
FUEL 1....23
FUEL 2....25
GENERATOR....26
ELECTRICAL 1....27
ELECTRICAL 2....29
ELECTRICAL 3....30
ELECTRICAL 4....32
ELECTRICAL 5....34
ELECTRICAL 6....35
STARTING MOTOR....36
BOTTOM COWLING 1....37
BOTTOM COWLING 2....39
BOTTOM COWLING 3....41
CONTROL....42
BRACKET 1....44
BRACKET 2....46
POWER TRIM & TILT ASSY 1....48
POWER TRIM & TILT ASSY 2....52
UPPER CASING....53
OIL PAN....55
LOWER CASING & DRIVE 1....56
LOWER CASING & DRIVE 2....60
LOWER CASING & DRIVE 3....62
LOWER CASING & DRIVE 4....66
STEERING GUIDE ATTACHMENT 1....68
STEERING GUIDE ATTACHMENT 2....69
OPTIONAL PARTS 1....70
OPTIONAL PARTS 2....71
REPAIR KIT 1....72
REPAIR KIT 2....73

INDEX

NUMERICAL INDEX....75

TABLE DES MATIERES

PIECES MAINTENANCE PERIODIQUE.....1
CAPOT SUPERIEUR 1..... 2
CAPOT SUPERIEUR 2..... 4
CYLINDRE & CARTER 1..... 5
VILEBREQUIN & PISTON.....7
CYLINDRE & CARTER 2..... 8
CYLINDRE & CARTER 3..... 10
CYLINDRE & CARTER 4..... 11
SOUPAPE..... 12
ADMISSION 1.....15
ADMISSION 2.....16
CARTER D'ACCELERATEUR 1.....18
CARTER D'ACCELERATEUR 2.....19
POMPE A INJECTEUR 1..... 20
POMPE A INJECTEUR 2..... 22
CARBURANT 1..... 23
CARBURANT 2..... 25
GENERATRICE.....26
PARTIE ELECTRIQUE 1.....27
PARTIE ELECTRIQUE 2.....29
PARTIE ELECTRIQUE 3.....30
PARTIE ELECTRIQUE 4.....32
PARTIE ELECTRIQUE 5.....34
PARTIE ELECTRIQUE 6.....35
DEMARREUR ELECTRIQUE.....36
CAPOT INFERIEUR 1.....37
CAPOT INFERIEUR 2.....39
CAPOT INFERIEUR 3.....41
COMMANDE..... 42
SUPPORT 1..... 44
SUPPORT 2..... 46
PUISSANCE PARER ET INCLINER 1..... 48
PUISSANCE PARER ET INCLINER 2..... 52
FOURREAU.....53
VENTILATEUR D'HUILE..... 55
BOITIER D'HELICE TRANSMISSION1.....56
BOITIER D'HELICE TRANSMISSION2.....60
BOITIER D'HELICE TRANSMISSION3.....62
BOITIER D'HELICE TRANSMISSION4.....66
DIRECTION GUIDE ACCESSOIRE 1.....68
DIRECTION GUIDE ACCESSOIRE 2..... 69
PIECES OPTIONNELLES 1.....70
PIECES OPTIONNELLES 2.....71
KITS DE REPARATION 1..... 72
KITS DE REPARATION 2..... 73

INDEX

INDEX NUMERIQUE.....75

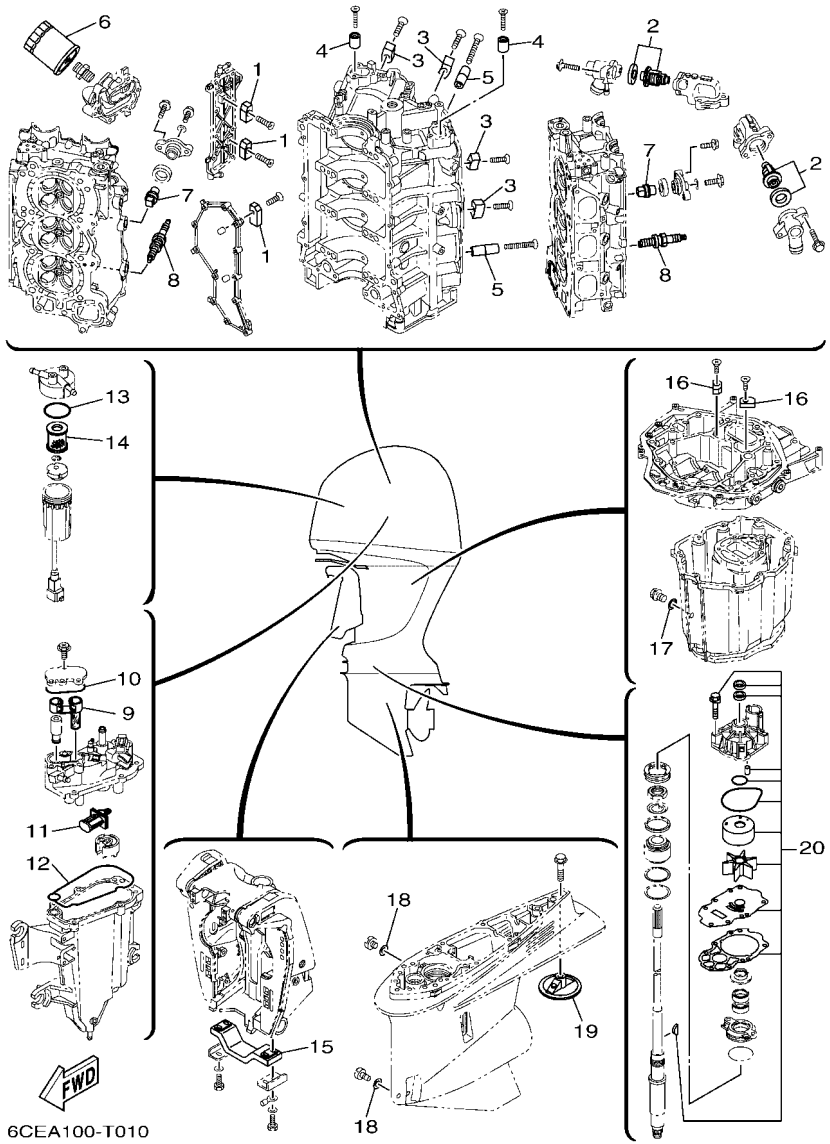

FIG. 1 SCHEDULED SERVICE PARTS — PIECES MAINTENANCE PERIODIQUE

REF. NO.	PART NO. N° PIECES	DESCRIPTION DESCRIPTION	ET	ET1	ET2	LET	LET1	REMARKS REMARQUES
1	63P–11325–01	ANODE ANODE	4	4	4	4	4	
2	6CE–12411–00	THERMOSTAT THERMOSTAT	2	2	2	2	2	
3	6AW–1132P–00	ANODE 5 ANODE 5	4	4	4	4	4	
4	68T–11325–00	ANODE ANODE	2	2	2	2	2	
5	6AW–1132N–01	ANODE 4 ANODE 4	2	2	2	2	2	
6	N26–13440–03	ELEMENT ASSY, OIL CLEANER ELEMENT, FILTRE A HUILE	1	1	1	1	1	
7	67F–11325–01	ANODE ANODE	8	8	8	8	8	
8	94702–00400	PLUG, SPARK (NGK LFR6A-11) BOUGIE D'ALLUMAGE(NGK LFR6A-11	6	6	6	6	6	
9	6CB–24501–01	FILTER, FUEL FILTRE	1	1	1	1	1	
10	6CB–13016–00	O-RING JOINT TORIQUE	1	1	1	1	1	
11	63P–13915–00	FILTER FILTRE	1	1	1	1	1	
12	6CB–14984–00	GASKET, FLOAT CHAMBER JOINT, CUVE DE FLOTTEUR	1	1	1	1	1	
13	6P3–24564–00	GASKET JOINT	1	1	1	1	1	
14	6P3–24563–01	ELEMENT, FILTER ELEMENT, FILTRE	1	1	1	1	1	
15	6G5–45251–02	ANODE ANODE	1	1	1	1	1	
16	63P–11325–11	ANODE ANODE	2	2	2	2	2	
17	90430–14M09	GASKET JOINT	1	1	1	1	1	
18	90430–08003	GASKET JOINT	2	2	2	2	2	
19	6CE–45373–00	ANODE ANODE	1	1	1	1	1	
20	6CE–W0078–02	WATER PUMP REPAIR KIT KIT DE REPARATION DE LA POMPE	1	1	1	1	1	

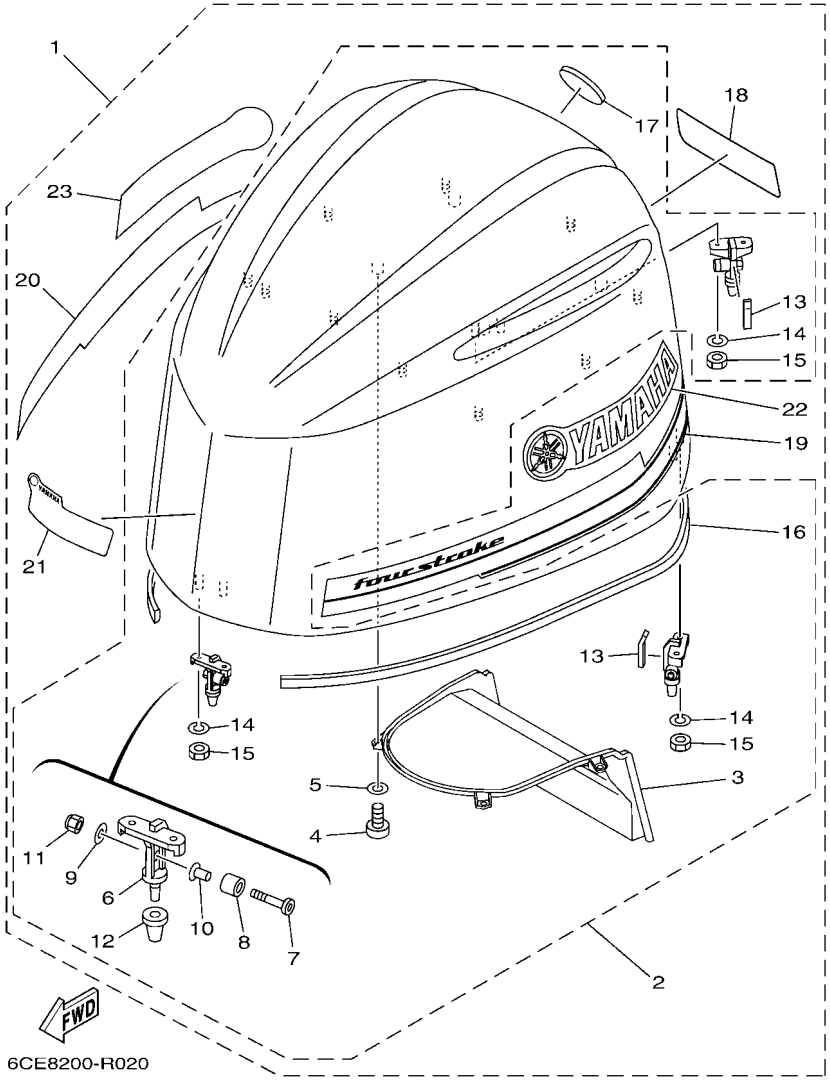

FIG. 2 TOP COWLING 1 — CAPOT SUPERIEUR 1

REF. NO.	PART NO. N° PIECES	DESCRIPTION DESCRIPTION	ET	ET1	ET2	LET	LET1	REMARKS REMARQUES
1	6CE–42610–02	TOP COWLING ASSY CAPOT (ENS.)	1			1		
	6CE–42610–22–CE	TOP COWLING ASSY CAPOT (ENS.)			1			WHITE WHITE
2	6CE–4261A–00	.TOP COWLING W/O GRAPHICS .CAPOT SUPERIEUR SANS GRAPHIQUE	1			1		
	6CE–4261A–00–CE	.TOP COWLING W/O GRAPHICS .CAPOT SUPERIEUR SANS GRAPHIQUE			1			WHITE WHITE
3	6CE–42635–00	..DUCT, WATER SEPARATOR ..CONDUIT, SEPARATEUR DE L'EAU	1		1	1		
4	97780–60516	..SCREW, TAPPING ..VIS, TETE BOMBEE	4		4	4		
5	92990–06200	..WASHER, PLAIN ..RONDELLE, PLATE	4		4	4		
6	6CB–42647–A0	..HOLDER, CLAMP BAND ..SUPPORT, SANDOW DE SERRAGE	3		3	3		
7	90111–08078	..BOLT,HEX. SOCKET BUTTON ..BOULON	3		3	3		
8	90387–10094	..COLLAR ..COLLERETTE	3		3	3		
9	92990–08600	..WASHER, PLATE ..RONDELLE, PLATE	3		3	3		
10	90387–08M45	..COLLAR ..COLLERETTE	3		3	3		
11	95780–08300	..NUT, FLANGE ..ECROU	3		3	3		
12	6AW–42663–00	..DAMPER 2 ..AMORTISSEUR 2	3		3	3		
13	6CB–42134–00	..COVER ..CAPOT	2		2	2		
14	92990–06100	..WASHER, SPRING ..RONDELLE, GROWER	6		6	6		
15	95380–06600	..NUT, HEXAGON ..ECROU	6		6	6		
16	6CB–42628–00	..SEAL ..JOINT	1		1	1		
17	6AW–42697–10	..TUNING FORK MARK ..MARQUE, YAMAHA	1		1	1		
18	6CE–42678–02	.GRAPHIC, REAR .ADHESIF, ARRIERE	1			1		
	6CE–42678–22	.GRAPHIC, REAR .ADHESIF, ARRIERE			1			FOR WHITE COWLING FOR WHITE COWLING
19	6CE–42675–02	.GRAPHIC, SIDE 1 .EMBLEME	1			1		
	6CE–42675–22	.GRAPHIC, SIDE 1 .EMBLEME			1			FOR WHITE COWLING FOR WHITE COWLING
20	6CE–42676–02	.GRAPHIC, SIDE 2 .EMBLEME	1			1		
	6CE–42676–22	.GRAPHIC, SIDE 2 .EMBLEME			1			FOR WHITE COWLING FOR WHITE COWLING
21	6CE–42677–01	.GRAPHIC, FRONT .ADHESIF, AVANT	1			1		
	6CE–42677–22	.GRAPHIC, FRONT .ADHESIF, AVANT			1			FOR WHITE COWLING FOR WHITE COWLING

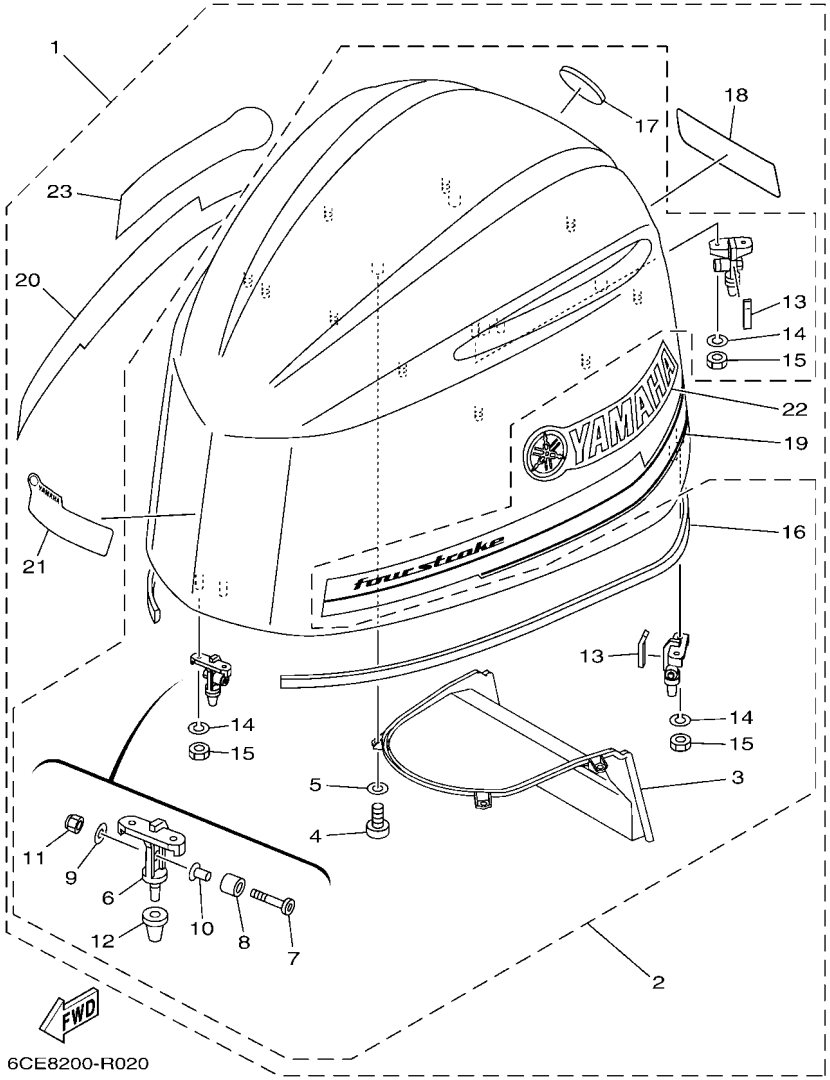

FIG. 2 TOP COWLING 1 — CAPOT SUPERIEUR 1

REF. NO.	PART NO. N° PIECES	DESCRIPTION DESCRIPTION	ET	ET1	ET2	LET	LET1	REMARKS REMARQUES
22	6CE–42681–03	.MARK, COWLING .ADHESIF, CAPOT	1			1		
	6CE–42681–22	.MARK, COWLING .ADHESIF, CAPOT			1			FOR WHITE COWLING FOR WHITE COWLING
23	6CE–42682–03	.MARK, COWLING .ADHESIF, CAPOT	1			1		
	6CE–42682–22	.MARK, COWLING .ADHESIF, CAPOT			1			FOR WHITE COWLING FOR WHITE COWLING

FIG. 3 TOP COWLING 2 — CAPOT SUPERIEUR 2

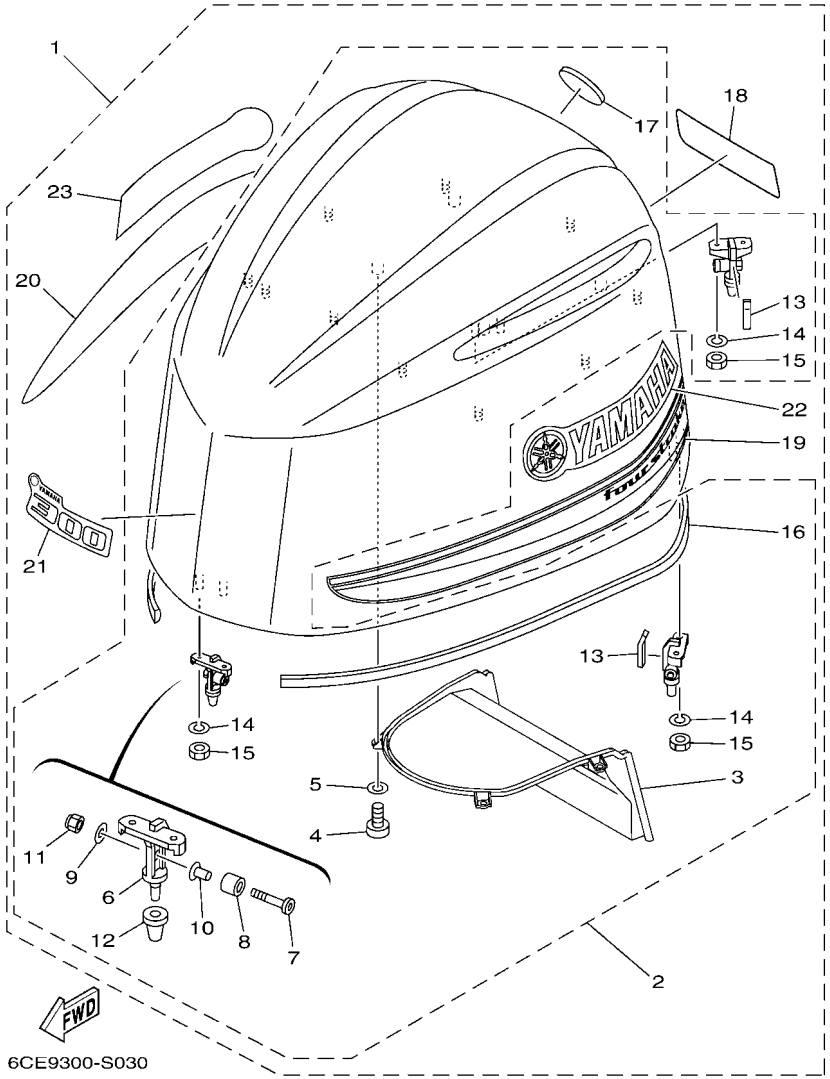

REF. NO.	PART NO. N° PIECES	DESCRIPTION DESCRIPTION	ET	ET1	ET2	LET	LET1	REMARKS REMARQUES
1	6CE–42610–10	TOP COWLING ASSY CAPOT (ENS.)		1			1	BLACK
2	6CE–4261A–10	.TOP COWLING W/O GRAPHICS .CAPOT SUPERIEUR SANS GRAPHIQUE		1			1	BLACK
3	6CE–42635–00	..DUCT, WATER SEPARATOR ..CONDUIT, SEPARATEUR DE L'EAU		1			1	
4	97780–60516	..SCREW, TAPPING ..VIS, TETE BOMBEE		4			4	
5	92990–06200	..WASHER, PLAIN ..RONDELLE, PLATE		4			4	
6	6CB–42647–A0	..HOLDER, CLAMP BAND ..SUPPORT, SANDOW DE SERRAGE		3			3	
7	90111–08078	..BOLT,HEX. SOCKET BUTTON ..BOULON		3			3	
8	90387–10094	..COLLAR ..COLLERETTE		3			3	
9	92990–08600	..WASHER, PLATE ..RONDELLE, PLATE		3			3	
10	90387–08M45	..COLLAR ..COLLERETTE		3			3	
11	95780–08300	..NUT, FLANGE ..ECROU		3			3	
12	6AW–42663–00	..DAMPER 2 ..AMORTISSEUR 2		3			3	
13	6CB–42134–00	..COVER ..CAPOT		2			2	
14	92990–06100	..WASHER, SPRING ..RONDELLE, GROWER		6			6	
15	95380–06600	..NUT, HEXAGON ..ECROU		6			6	
16	6CB–42628–00	..SEAL ..JOINT		1			1	
17	6AW–42697–10	..TUNING FORK MARK ..MARQUE, YAMAHA		1			1	
18	6CE–42678–10	.GRAPHIC, REAR .ADHESIF, ARRIERE		1			1	
19	6CE–42675–10	.GRAPHIC, SIDE 1 .EMBLEME		1			1	
20	6CE–42676–10	.GRAPHIC, SIDE 2 .EMBLEME		1			1	
21	6CE–42677–10	.GRAPHIC, FRONT .ADHESIF, AVANT		1			1	
22	6CE–42681–10	.MARK, COWLING .ADHESIF, CAPOT		1			1	
23	6CE–42682–10	.MARK, COWLING .ADHESIF, CAPOT		1			1	

FIG. 4 CYLINDER & CRANKCASE 1 — CYLINDRE & CARTER 1

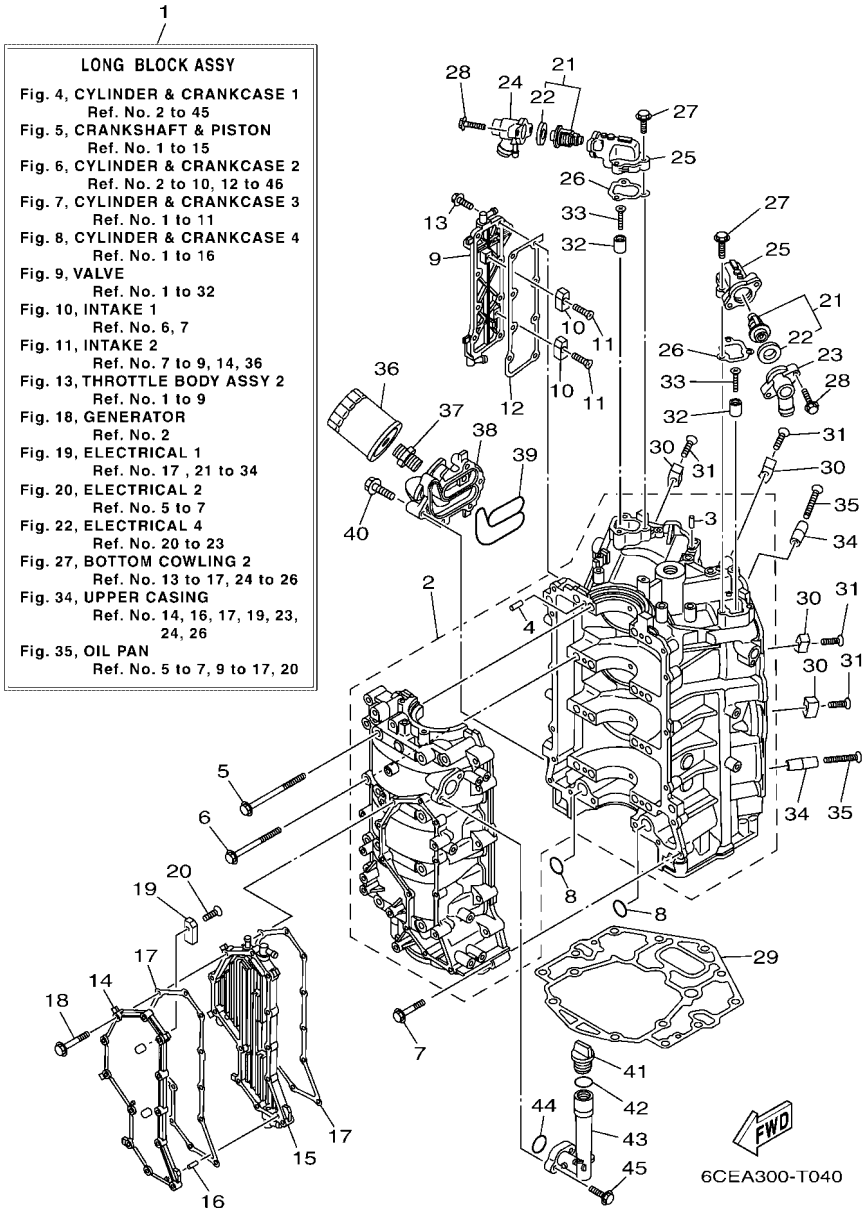

REF. NO.	PART NO. N° PIECES	DESCRIPTION DESCRIPTION	ET	ET1	ET2	LET	LET1	REMARKS REMARQUES
1	6CE–11000–03	LONG BLOCK ASSY SOUS-ASSEMBLEE DU MOTEUR	1	1	1	1	1	
2	6CE–15100–10	CRANKCASE ASSY CARTER DE MOTEUR COMPLET	1	1	1	1	1	
3	93606–12019	.PIN, DOWEL .GOUPILLE	3	3	3	3	3	
4	93606–12019	.PIN, DOWEL .GOUPILLE	8	8	8	8	8	
5	6CB–15187–00	BOLT BOULON	8	8	8	8	8	
6	6CB–15481–00	BOLT 1 BOULON 1	8	8	8	8	8	
7	90105–08175	BOLT, FLANGE BOULON, A COLLERETTE	16	16	16	16	16	
8	93210–26658	O-RING JOINT TORIQUE	2	2	2	2	2	
9	6CE–1131C–00–9S	COVER, JOINT COUVERCLE, RACCORDEMENT	1	1	1	1	1	
10	63P–11325–01	ANODE ANODE	2	2	2	2	2	
11	90151–06M02	SCREW, COUNTERSUNK VIS, TETE NOYEE	2	2	2	2	2	
12	6CB–1131B–00	GASKET, COVER JOINT, COUVERCLE	1	1	1	1	1	
13	90105–06M07	BOLT, FLANGE BOULON, A COLLERETTE	8	8	8	8	8	
14	6CE–15411–00–9S	COVER, CRANKCASE 1 COUVERCLE 1, CARTER MOTEUR	1	1	1	1	1	
15	6CE–15421–10–9S	COVER, CRANKCASE 2 COUVERCLE 2, CARTER MOTEUR	1	1	1	1	1	
16	91690–40010	PIN, SPRING AGRAFFE	1	1	1	1	1	
17	6CB–15451–01	GASKET, CRANKCASE COVER 1 JOINT, COUVERCLE DE CARTER 1	2	2	2	2	2	
18	90105–06151	BOLT, FLANGE BOULON, A COLLERETTE	12	12	12	12	12	
19	63P–11325–01	ANODE ANODE	2	2	2	2	2	
20	90151–06M02	SCREW, COUNTERSUNK VIS, TETE NOYEE	2	2	2	2	2	
21	6CE–12411–00	THERMOSTAT THERMOSTAT	2	2	2	2	2	
22	67F–12412–00	.SEAL, THERMOSTAT .JOINT, THERMOSTAT	1	1	1	1	1	
23	6CE–12413–B0–9S	COVER, THERMOSTAT COUVERCLE, THERMOSTAT	1	1	1	1	1	
24	6CE–12413–A0–9S	COVER, THERMOSTAT COUVERCLE, THERMOSTAT	1	1	1	1	1	
25	6CB–12422–10–9S	COVER, HOUSING COUVERCLE DE CARTER DE POMPE	2	2	2	2	2	
26	6CB–12427–11	GASKET, HOUSING COVER 1 JOINT, COUVERCLE DE CARTER 1	2	2	2	2	2	
27	95027–06025	BOLT, FLANGE BOULON, A COLLERETTE	6	6	6	6	6	

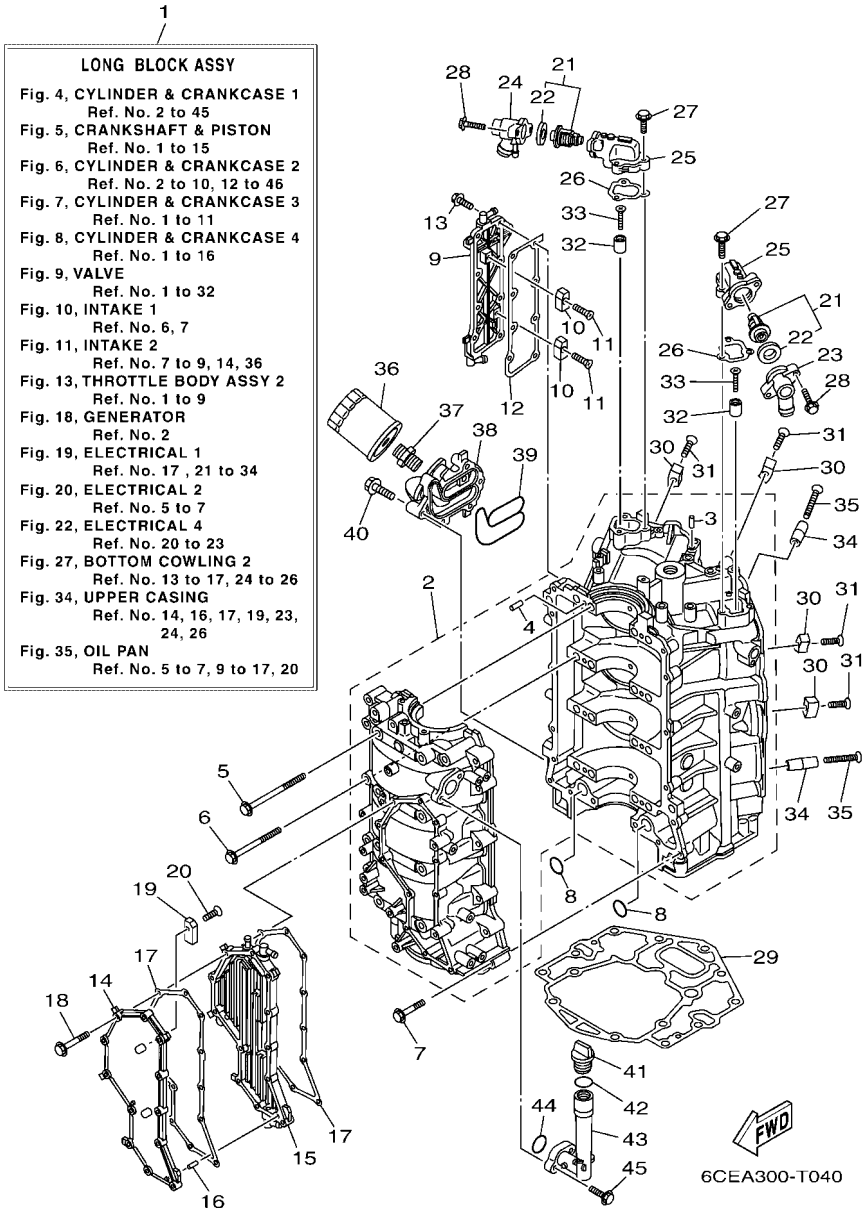

FIG. 4 CYLINDER & CRANKCASE 1 — CYLINDRE & CARTER 1

REF. NO.	PART NO. N° PIECES	DESCRIPTION DESCRIPTION	ET	ET1	ET2	LET	LET1	REMARKS REMARQUES
28	90105–06037	BOLT, FLANGE BOULON, A COLLERETTE	4	4	4	4	4	
29	6CB–11351–00	GASKET, CYLINDER JOINT, D'EMBASE	1	1	1	1	1	
30	6AW–1132P–00	ANODE 5 ANODE 5	4	4	4	4	4	
31	98780–06530	SCREW, FLAT HEAD VIS A TETE FRAISEE	4	4	4	4	4	
32	68T–11325–00	ANODE ANODE	2	2	2	2	2	
33	90151–05M05	SCREW, COUNTERSUNK VIS, TETE NOYEE	2	2	2	2	2	
34	6AW–1132N–01	ANODE 4 ANODE 4	2	2	2	2	2	
35	98780–06550	SCREW, FLAT HEAD VIS A TETE FRAISEE	2	2	2	2	2	
36	N26–13440–03	ELEMENT ASSY, OIL CLEANER ELEMENT, FILTRE A HUILE	1	1	1	1	1	
37	90401–19001	BOLT, UNION BOULON, RACCORD	1	1	1	1	1	
38	6CE–13446–10–9S	CONNECTOR CONNECTEUR	1	1	1	1	1	
39	6CB–13477–00	GASKET JOINT	1	1	1	1	1	
40	90105–06151	BOLT, FLANGE BOULON, A COLLERETTE	5	5	5	5	5	
41	6G8–15363–00	PLUG, OIL PLOT, HUILE	1	1	1	1	1	
42	93210–24M79	O-RING JOINT TORIQUE	1	1	1	1	1	
43	6CB–15319–00	JOINT JOINT	1	1	1	1	1	
44	93210–27370	O-RING JOINT TORIQUE	1	1	1	1	1	
45	90105–06037	BOLT, FLANGE BOULON, A COLLERETTE	2	2	2	2	2	

FIG. 5 CRANKSHAFT & PISTON — VILEBREQUIN & PISTON

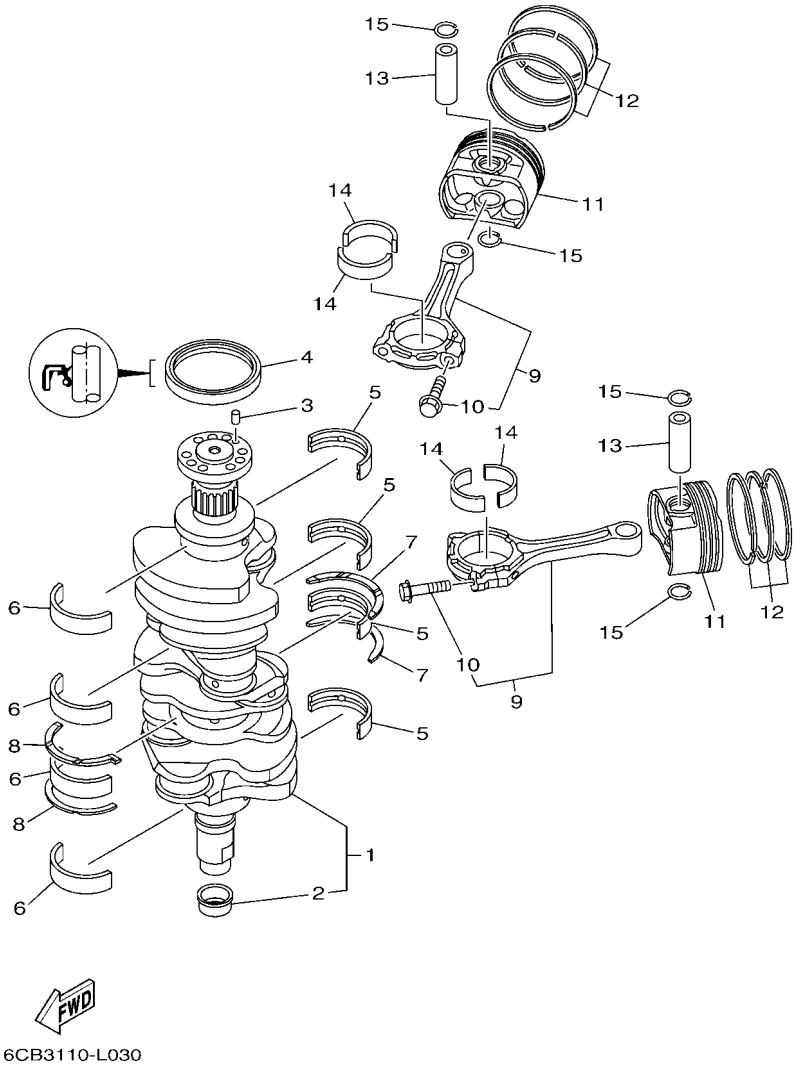

REF. NO.	PART NO. N° PIECES	DESCRIPTION DESCRIPTION	ET	ET1	ET2	LET	LET1	REMARKS REMARQUES
1	6CB–11410–00	CRANKSHAFT VILEBREQUIN COMPLET	1	1	1	1	1	
2	6CB–11478–00	.COLLAR .COLLERETTE	1	1	1	1	1	
3	93606–12019	PIN, DOWEL GOUPILLE	1	1	1	1	1	
4	93102–85008	OIL SEAL JOINT SPY	1	1	1	1	1	
5	6CB–11416–00	PLANE BEARING, CRANKSHAFT 1 COUSSINET DE VILEBREQUIN 1	4	4	4	4	4	UR PURPLE UR PURPLE
	6CB–11416–10	PLANE BEARING, CRANKSHAFT 1 COUSSINET DE VILEBREQUIN 1	4	4	4	4	4	UR YELLOW UR YELLOW
	6CB–11416–20	PLANE BEARING, CRANKSHAFT 1 COUSSINET DE VILEBREQUIN 1	4	4	4	4	4	UR RED UR RED
	6CB–11416–30	PLANE BEARING, CRANKSHAFT 1 COUSSINET DE VILEBREQUIN 1	4	4	4	4	4	UR GREEN UR GREEN
	6CB–11416–40	PLANE BEARING, CRANKSHAFT 1 COUSSINET DE VILEBREQUIN 1	4	4	4	4	4	UR BROWN UR BROWN
6	6CB–11417–00	PLANE BEARING, CRANKSHAFT 2 COUSSINET DE VILEBREQUIN 2	4	4	4	4	4	UR PURPLE UR PURPLE
	6CB–11417–10	PLANE BEARING, CRANKSHAFT 2 COUSSINET DE VILEBREQUIN 2	4	4	4	4	4	UR YELLOW UR YELLOW
	6CB–11417–20	PLANE BEARING, CRANKSHAFT 2 COUSSINET DE VILEBREQUIN 2	4	4	4	4	4	UR RED UR RED
	6CB–11417–30	PLANE BEARING, CRANKSHAFT 2 COUSSINET DE VILEBREQUIN 2	4	4	4	4	4	UR GREEN UR GREEN
	6CB–11417–40	PLANE BEARING, CRANKSHAFT 2 COUSSINET DE VILEBREQUIN 2	4	4	4	4	4	UR BROWN UR BROWN
7	6CB–11426–03	BEARING, THRUST 1 ROULEMENT DE BUTEE 1	2	2	2	2	2	
8	6CB–11427–03	BEARING, THRUST 2 ROULEMENT DE BUTEE 2	2	2	2	2	2	
9	6CB–W1165–10	CONNECTING ROD ASSY BIELLE COMPLETTE	6	6	6	6	6	
10	63P–11654–10	.BOLT, CONNECTING ROD .BOULON, BIELLE	2	2	2	2	2	
11	6CE–11631–02	PISTON (STD) PISTON (STD)	6	6	6	6	6	
12	6CB–11603–00	PISTON RING SET (STD) JEU DE SEGMENTS (STD)	6	6	6	6	6	
13	6CB–11633–00	PIN, PISTON AXE, PISTON	6	6	6	6	6	
14	6JD–11656–00	PLANE BEARING, CONNECTING ROD ROULEMENT DE BIELLE	12	12	12	12	12	UR BLACK UR BLACK
	6JD–11656–10	PLANE BEARING, CONNECTING ROD ROULEMENT DE BIELLE	12	12	12	12	12	UR PINK UR PINK
	6JD–11656–20	PLANE BEARING, CONNECTING ROD ROULEMENT DE BIELLE	12	12	12	12	12	UR RED UR RED
15	K0F–A3233–00	RING,HOLE SNAP JONC	12	12	12	12	12	

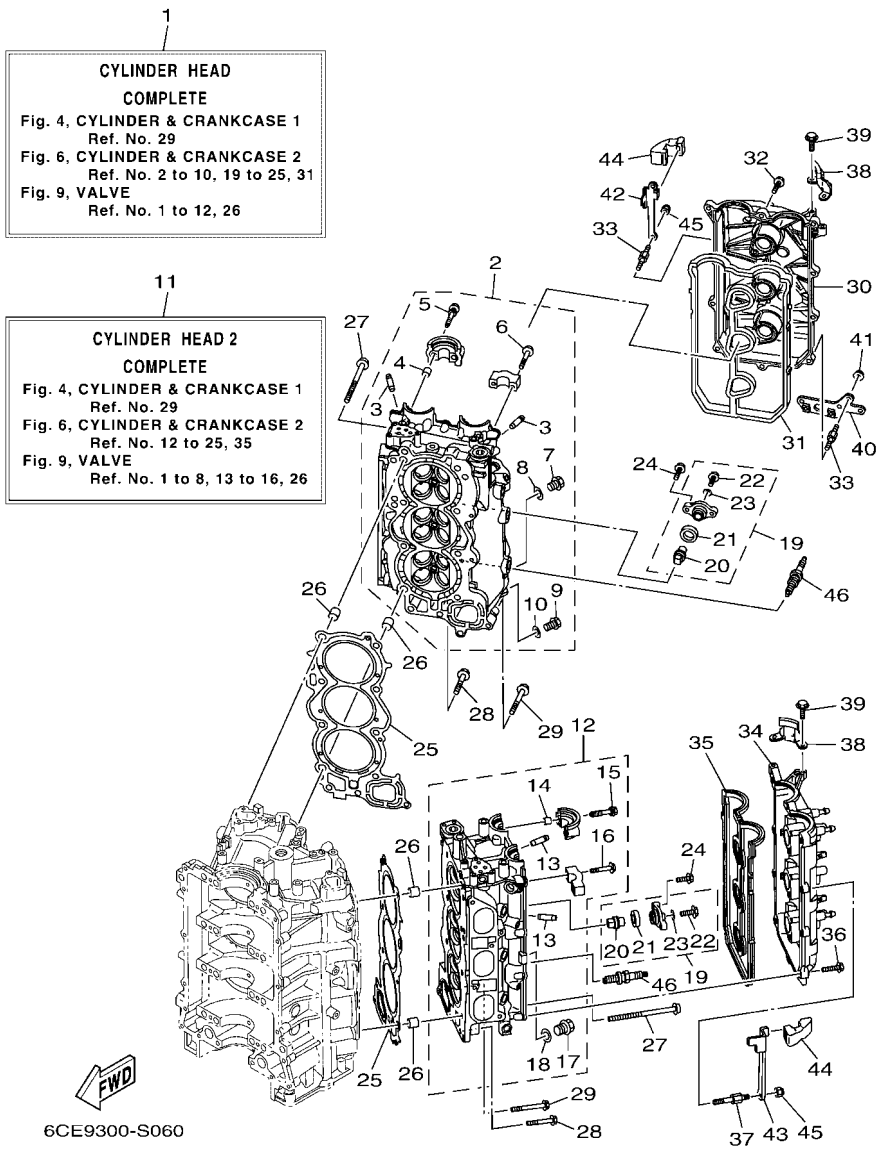

FIG. 6 CYLINDER & CRANKCASE 2 — CYLINDRE & CARTER 2

REF. NO.	PART NO. N° PIECES	DESCRIPTION DESCRIPTION	ET	ET1	ET2	LET	LET1	REMARKS REMARQUES
1	6CE–W009A–03–9S	CYLINDER HEAD COMPLETE CULASSE (ENS.)	1	1	1	1	1	
2	6CE–11110–12–9S	CYLINDER HEAD ASSY JEU DE CULASSE	1	1	1	1	1	
3	6S5–11133–10	.GUIDE, VALVE 1 .GUIDE, SOUPAPE 1	12	12	12	12	12	
4	91809–08006	.PIN, DOWEL .GOUJON, D'ASSEMBLAGE	4	4	4	4	4	
5	90119–07001	.BOLT, WITH WASHER .BOULON, AVEC RONDELLE	4	4	4	4	4	
6	90119–07234	.BOLT, WITH WASHER .BOULON, AVEC RONDELLE	12	12	12	12	12	
7	90340–18M09	.PLUG, STRAIGHT SCREW .PLOT, FILETE DROIT	1	1	1	1	1	
8	90201–186F1	.WASHER, PLATE .RONDELLE, PLATE	1	1	1	1	1	
9	90340–14M06	.PLUG, STRAIGHT SCREW .PLOT, FILETE DROIT	1	1	1	1	1	
10	90430–14115	.GASKET .JOINT	1	1	1	1	1	
11	6CE–W009C–03–9S	CYLINDER HEAD 2 COMPLETE CULASSE 2	1	1	1	1	1	
12	6CE–11120–12–9S	CYLINDER HEAD ASSY 2 CULASSE 2	1	1	1	1	1	
13	6S5–11133–10	.GUIDE, VALVE 1 .GUIDE, SOUPAPE 1	12	12	12	12	12	
14	91809–08006	.PIN, DOWEL .GOUJON, D'ASSEMBLAGE	4	4	4	4	4	
15	90119–07001	.BOLT, WITH WASHER .BOULON, AVEC RONDELLE	4	4	4	4	4	
16	90119–07234	.BOLT, WITH WASHER .BOULON, AVEC RONDELLE	12	12	12	12	12	
17	90340–18M09	.PLUG, STRAIGHT SCREW .PLOT, FILETE DROIT	1	1	1	1	1	
18	90201–186F1	.WASHER, PLATE .RONDELLE, PLATE	1	1	1	1	1	
19	67F–11301–00	ANODE COVER ASSY COUVERCLE ANODE (ENS.)	8	8	8	8	8	
20	67F–11325–01	.ANODE .ANODE	1	1	1	1	1	
21	67F–11328–00	.GROMMET, ANODE .PASSE-FIL	1	1	1	1	1	
22	90105–06M07	.BOLT, FLANGE .BOULON, A COLLERETTE	1	1	1	1	1	
23	90430–06M03	.GASKET .JOINT	1	1	1	1	1	
24	95D95–08025	BOLT, FLANGE DEEP RECESS BOULON FIXATION	16	16	16	16	16	
25	6CB–11181–00	GASKET, CYLINDER HEAD 1 JOINT, DE CULASSE 1	2	2	2	2	2	
26	90387–11005	COLLAR COLLERETTE	4	4	4	4	4	
27	90149–11001	SCREW VIS	16	16	16	16	16	

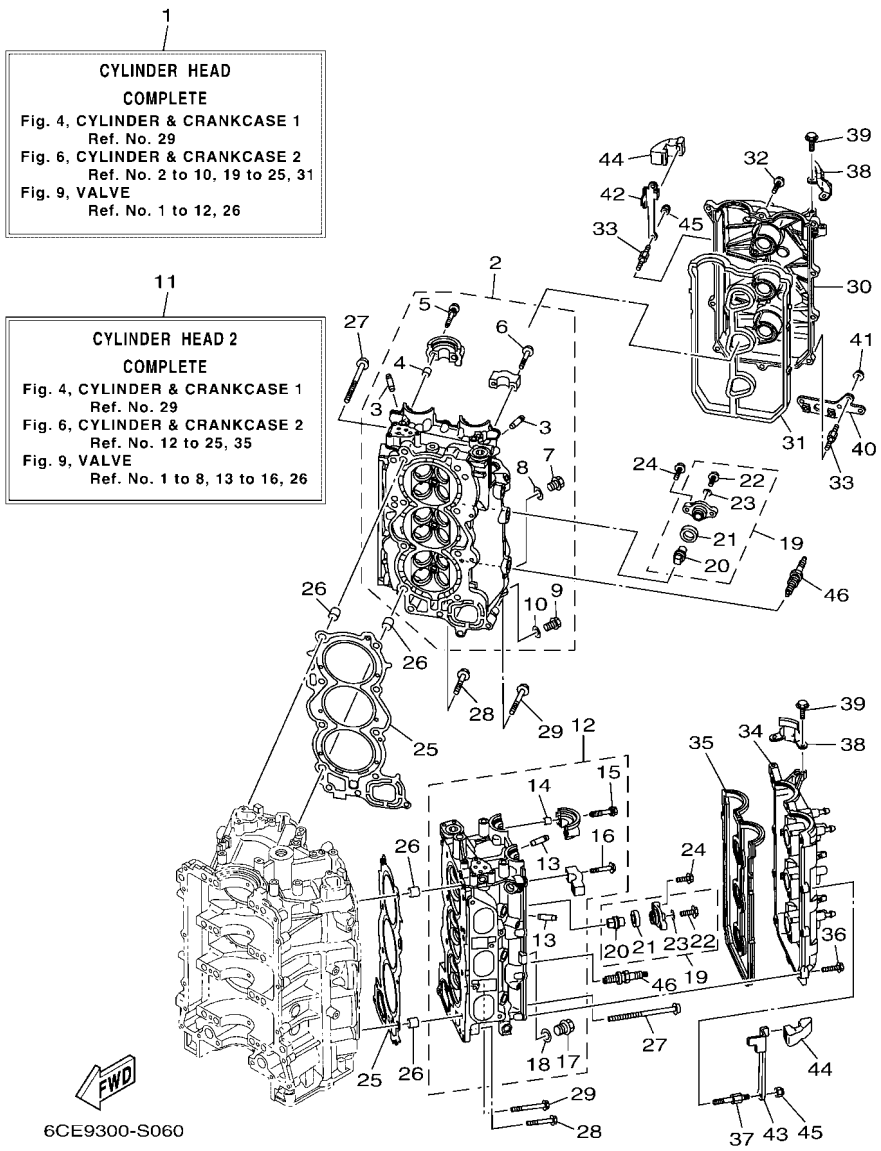

FIG. 6 CYLINDER & CRANKCASE 2 — CYLINDRE & CARTER 2

REF. NO.	PART NO. N° PIECES	DESCRIPTION DESCRIPTION	ET	ET1	ET2	LET	LET1	REMARKS REMARQUES
28	90105–08175	BOLT, FLANGE BOULON, A COLLERETTE	4	4	4	4	4	
29	90105–08220	BOLT, FLANGE BOULON, A COLLERETTE	2	2	2	2	2	
30	6CB–11191–02	COVER, CYLINDER HEAD 1 COUVERCLE, CULASSE 1	1	1	1	1	1	
31	6CB–11193–00	GASKET, HEAD COVER 1 JOINT, COUVERCLE DE CULASSE 1	1	1	1	1	1	
32	95D95–06030	BOLT, FLANGE DEEP RECESS BOULON FIXATION	9	9	9	9	9	
33	90109–06277	BOLT BOULON	4	4	4	4	4	
34	6CB–11192–02	COVER, CYLINDER HEAD 2 COUVERCLE, CULASSE 2	1	1	1	1	1	
35	6CB–11194–00	GASKET, HEAD COVER 2 JOINT, COUVERCLE DE CULASSE 2	1	1	1	1	1	
36	95D95–06030	BOLT, FLANGE DEEP RECESS BOULON FIXATION	11	11	11	11	11	
37	90109–06277	BOLT BOULON	2	2	2	2	2	
38	6AW–15142–00	GUIDE 1 GUIDE 1	2	2	2	2	2	
39	95D95–06014	BOLT, FLANGE DEEP RECESS BOULON FIXATION	4	4	4	4	4	
40	6CB–2134V–00	BRACKET SUPPORT	1	1	1	1	1	
41	90179–06M28	NUT ECROU	2	2	2	2	2	
42	6CB–11998–00	BRACKET 1 SUPPORT 1	1	1	1	1	1	
43	6CB–11999–00	BRACKET 2 SUPPORT 2	1	1	1	1	1	
44	6CB–42662–00	DAMPER AMORTISSEUR	2	2	2	2	2	
45	90185–06M07	NUT, SELF-LOCKING ECROU,AUTO-BLOQUANT	4	4	4	4	4	
46	94702–00400	PLUG, SPARK (NGK LFR6A-11) BOUGIE D'ALLUMAGE(NGK LFR6A-11	6	6	6	6	6	

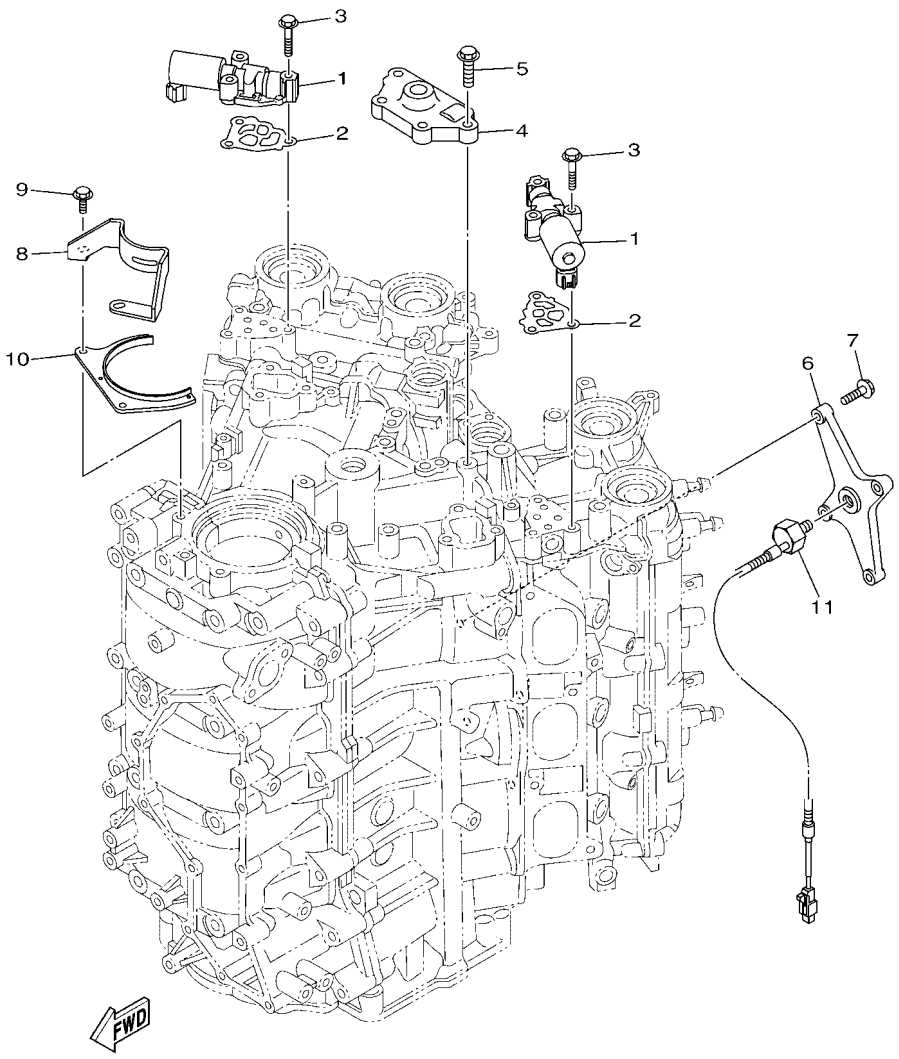

6CD6100-N060

FIG. 7 CYLINDER & CRANKCASE 3 — CYLINDRE & CARTER 3

REF. NO.	PART NO. N° PIECES	DESCRIPTION DESCRIPTION	ET	ET1	ET2	LET	LET1	REMARKS REMARQUES
1	6CB–86120–00	SOLENOID VALVE ASSY SOLENOIDE	2	2	2	2	2	
2	6CB–1242F–00	GASKET, FILTER JOINT, FILTRE	2	2	2	2	2	
3	90105–06035	BOLT, FLANGE BOULON, A COLLERETTE	6	6	6	6	6	
4	6CB–15544–00	STAY 1 SUPPORT 1	1	1	1	1	1	
5	90105–08178	BOLT, FLANGE BOULON, A COLLERETTE	4	4	4	4	4	
6	6CB–1135A–00	BRACKET SUPPORT	1	1	1	1	1	
7	90105–06037	BOLT, FLANGE BOULON, A COLLERETTE	4	4	4	4	4	
8	6CB–15142–00	GUIDE 1 GUIDE 1	1	1	1	1	1	
9	95D95–06016	BOLT, FLANGE DEEP RECESS BOULON FIXATION	2	2	2	2	2	
10	6CB–1149A–00	PLATE 1 FLAQUE 1	1	1	1	1	1	
11	6P2–85780–00	SENSOR, KNOCK SONDE DE COGNEMENT	1	1	1	1	1	

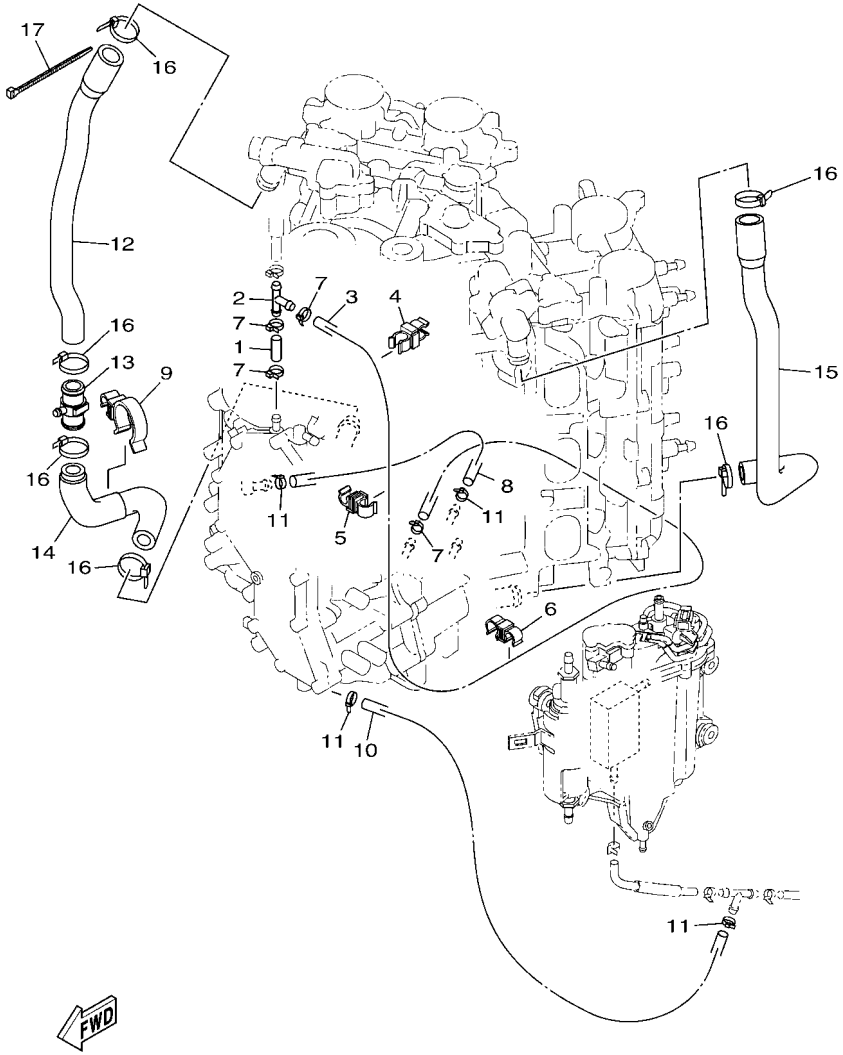

6JD1200-T070

FIG. 8 CYLINDER & CRANKCASE 4 — CYLINDRE & CARTER 4

REF. NO.	PART NO. N° PIECES	DESCRIPTION DESCRIPTION	ET	ET1	ET2	LET	LET1	REMARKS REMARQUES
1	90445–09220	HOSE (L30) DURITE (L30)	1	1	1	1	1	
2	688–24378–00	PIPE, JOINT 3 DURITE RACCORDEMENT 3	1	1	1	1	1	
3	6CB–12576–10	HOSE 1 TUYAU 1	1	1	1	1	1	
4	90464–10M59	CLAMP BRIDE	1	1	1	1	1	
5	90464–09013	CLAMP BRIDE	1	1	1	1	1	
6	90464–12010	CLAMP BRIDE	1	1	1	1	1	
7	90465–11M10	CLAMP BRIDE	4	4	4	4	4	
8	6CB–12577–00	HOSE 2 TUYAU 2	1	1	1	1	1	
9	90464–26002	CLAMP BRIDE	1	1	1	1	1	
10	90445–096H2	HOSE (L280) DURITE (L280)	1	1	1	1	1	
11	90465–11M10	CLAMP BRIDE	4	4	4	4	4	
12	6CE–1244G–00	HOSE, 4 DURITE 4	1	1	1	1	1	
13	6CE–24378–00	PIPE, JOINT 3 DURITE RACCORDEMENT 3	1	1	1	1	1	
14	6CE–1244H–00	HOSE 5 DURITE 5	1	1	1	1	1	
15	6CB–1243E–00	HOSE 2 DURITE 2	1	1	1	1	1	
16	90465–11M59	CLAMP BRIDE	6	6	6	6	6	
17	90465–14M66	CLAMP BRIDE	1	1	1	1	1	

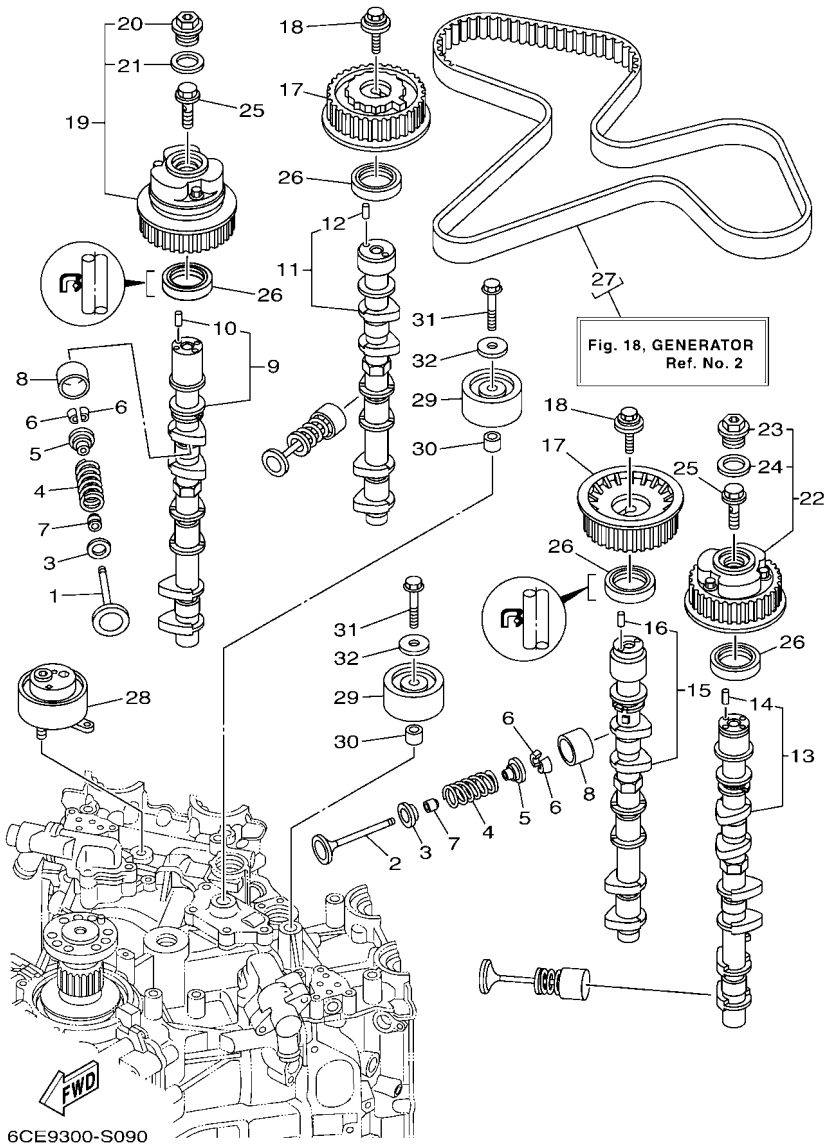

FIG. 9 VALVE — SOUPAPE

REF. NO.	PART NO. N° PIECES	DESCRIPTION DESCRIPTION	ET	ET1	ET2	LET	LET1	REMARKS REMARQUES
1	6CB–12111–00	VALVE, INTAKE SOUPAPE, ADMISSION	12	12	12	12	12	
2	6DA–12121–00	VALVE, EXHAUST SOUPAPE, ECHAPPEMENT	12	12	12	12	12	
3	K0F–A3743–00	SEAT, VALVE SPRING SIEGE, RESSORT DE SOUPAPE	24	24	24	24	24	
4	6CB–12113–00	SPRING, VALVE INNER RESSORT DE SOUPAPE, INTERNE	24	24	24	24	24	
5	K0F–A3741–00	RETAINER, VALVE SPRING BUTEE DE RESSORT DE SOUPAPA	24	24	24	24	24	
6	K0F–A3742–00	LOCK, VALVE SPRING RETAINER FRAISE, SOUPAPE	48	48	48	48	48	
7	51Y–12119–00	SEAL, VALVE STEM JOINT, QUEUE DE SOUPAPE	24	24	24	24	24	
8	K0F–A3751–00	LIFTER, VALVE (3.000) LEVE-SOUPAPE (3.000)	24	24	24	24	24	UR UR
	K0F–A3751–10	LIFTER, VALVE (3.025) LEVE-SOUPAPE (3.025)	24	24	24	24	24	UR UR
	K0F–A3751–20	LIFTER, VALVE (3.050) LEVE-SOUPAPE (3.050)	24	24	24	24	24	UR UR
	K0F–A3751–30	LIFTER, VALVE (3.075) LEVE-SOUPAPE (3.075)	24	24	24	24	24	UR UR
	K0F–A3751–40	LIFTER, VALVE (3.100) LEVE-SOUPAPE (3.100)	24	24	24	24	24	UR UR
	K0F–A3751–50	LIFTER, VALVE (3.122) LEVE-SOUPAPE (3.122)	24	24	24	24	24	UR UR
	K0F–A3751–60	LIFTER, VALVE (3.142) LEVE-SOUPAPE (3.142)	24	24	24	24	24	UR UR
	K0F–A3751–70	LIFTER, VALVE (3.162) LEVE-SOUPAPE (3.162)	24	24	24	24	24	UR UR
	K0F–A3751–80	LIFTER, VALVE (3.182) LEVE-SOUPAPE (3.182)	24	24	24	24	24	UR UR
	K0F–A3751–90	LIFTER, VALVE (3.202) LEVE-SOUPAPE (3.202)	24	24	24	24	24	UR UR
	K0F–A3751–A0	LIFTER, VALVE (3.222) LEVE-SOUPAPE (3.222)	24	24	24	24	24	UR UR
	K0F–A3751–B0	LIFTER, VALVE (3.242) LEVE-SOUPAPE (3.242)	24	24	24	24	24	UR UR
	K0F–A3751–C0	LIFTER, VALVE (3.262) LEVE-SOUPAPE (3.262)	24	24	24	24	24	UR UR
	K0F–A3751–D0	LIFTER, VALVE (3.282) LEVE-SOUPAPE (3.282)	24	24	24	24	24	UR UR
	K0F–A3751–E0	LIFTER, VALVE (3.302) LEVE-SOUPAPE (3.302)	24	24	24	24	24	UR UR
	K0F–A3751–F0	LIFTER, VALVE (3.322) LEVE-SOUPAPE (3.322)	24	24	24	24	24	UR UR
	K0F–A3751–G0	LIFTER, VALVE (3.342) LEVE-SOUPAPE (3.342)	24	24	24	24	24	UR UR
	K0F–A3751–H0	LIFTER, VALVE (3.362) LEVE-SOUPAPE (3.362)	24	24	24	24	24	UR UR
	K0F–A3751–J0	LIFTER, VALVE (3.382) LEVE-SOUPAPE (3.382)	24	24	24	24	24	UR UR
	K0F–A3751–K0	LIFTER, VALVE (3.402) LEVE-SOUPAPE (3.402)	24	24	24	24	24	UR UR

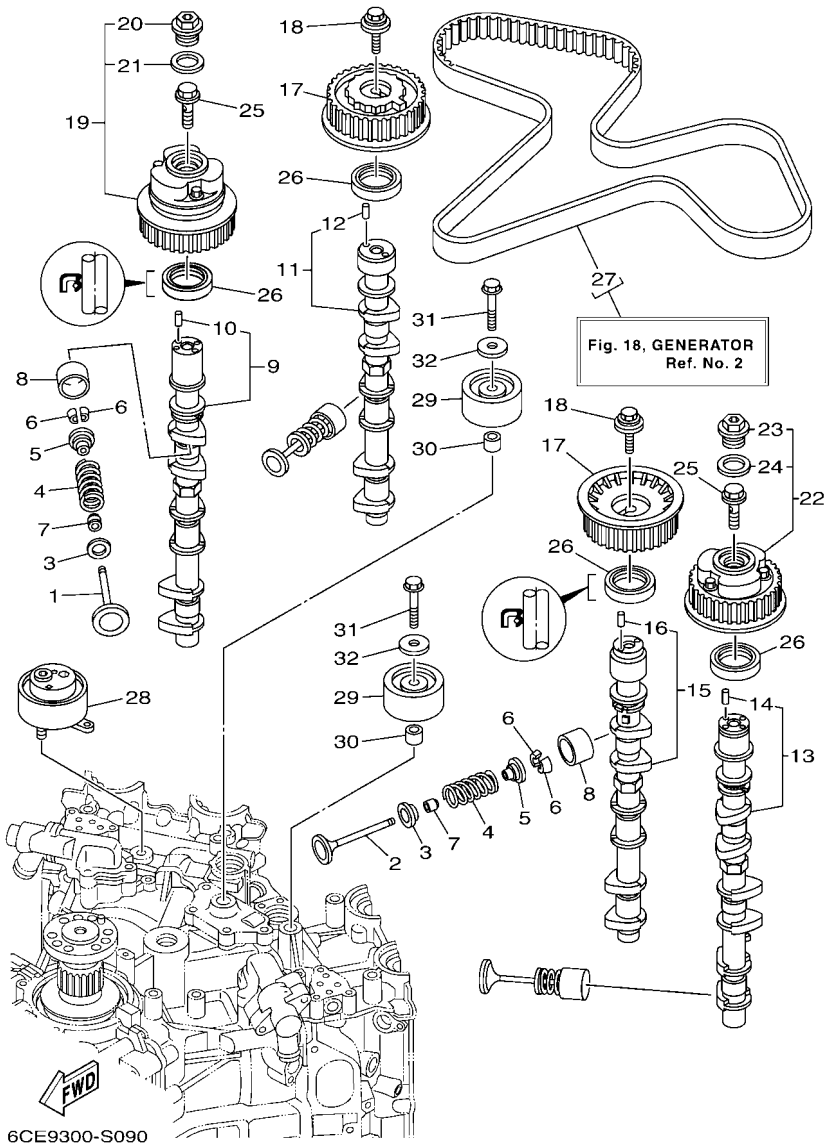

FIG. 9 VALVE SOUPAPE

REF. NO.	PART NO. N° PIECES	DESCRIPTION DESCRIPTION	ET	ET1	ET2	LET	LET1	REMARKS REMARQUES
8	K0F–A3751–L0	LIFTER, VALVE (3.422) LEVE-SOUPAPE (3.422)	24	24	24	24	24	UR UR
	K0F–A3751–M0	LIFTER, VALVE (3.442) LEVE-SOUPAPE (3.442)	24	24	24	24	24	UR UR
	K0F–A3751–N0	LIFTER, VALVE (3.462) LEVE-SOUPAPE (3.462)	24	24	24	24	24	UR UR
	K0F–A3751–P0	LIFTER, VALVE (3.482) LEVE-SOUPAPE (3.482)	24	24	24	24	24	UR UR
	K0F–A3751–R0	LIFTER, VALVE (3.502) LEVE-SOUPAPE (3.502)	24	24	24	24	24	UR UR
	K0F–A3751–S0	LIFTER, VALVE (3.522) LEVE-SOUPAPE (3.522)	24	24	24	24	24	UR UR
	K0F–A3751–T0	LIFTER, VALVE (3.542) LEVE-SOUPAPE (3.542)	24	24	24	24	24	UR UR
	K0F–A3753–00	LIFTER, VALVE (3.562) LEVE-SOUPAPE (3.562)	24	24	24	24	24	UR UR
	K0F–A3753–10	LIFTER, VALVE (3.582) LEVE-SOUPAPE (3.582)	24	24	24	24	24	UR UR
	K0F–A3753–20	LIFTER, VALVE (3.602) LEVE-SOUPAPE (3.602)	24	24	24	24	24	UR UR
	K0F–A3753–30	LIFTER, VALVE (3.625) LEVE-SOUPAPE (3.625)	24	24	24	24	24	UR UR
	K0F–A3753–40	LIFTER, VALVE (3.650) LEVE-SOUPAPE (3.650)	24	24	24	24	24	UR UR
	K0F–A3753–50	LIFTER, VALVE (3.675) LEVE-SOUPAPE (3.675)	24	24	24	24	24	UR UR
	K0F–A3753–60	LIFTER, VALVE (3.700) LEVE-SOUPAPE (3.700)	24	24	24	24	24	UR UR
	K0F–A3753–70	LIFTER, VALVE (3.725) LEVE-SOUPAPE (3.725)	24	24	24	24	24	UR UR
9	6CB–12171–00	CAMSHAFT 1 ARBRE A CAMES 1	1	1	1	1	1	
10	93605–10108	.PIN, DOWEL .AXE	1	1	1	1	1	
11	6CB–12181–00	CAMSHAFT 2 ARBRE A CAMES 2	1	1	1	1	1	
12	93605–10108	.PIN, DOWEL .AXE	1	1	1	1	1	
13	6CB–12172–00	CAMSHAFT 3 ARBRE A CAMES 3	1	1	1	1	1	
14	93605–10108	.PIN, DOWEL .AXE	1	1	1	1	1	
15	6CB–12182–00	CAMSHAFT 4 ARBRE A CAMES 4	1	1	1	1	1	
16	93605–10108	.PIN, DOWEL .AXE	1	1	1	1	1	
17	6CB–11567–00	GEAR, DRIVEN 2 PIGNON SECONDAIRE 2	2	2	2	2	2	
18	90119–10050	BOLT, WITH WASHER BOULON, AVEC RONDELLE	2	2	2	2	2	
19	6CB–12645–01	PULLEY ASSY 1 POULIE COMPLET 1	1	1	1	1	1	
20	6P2–12623–00	.BOLT .BOULON	1	1	1	1	1	

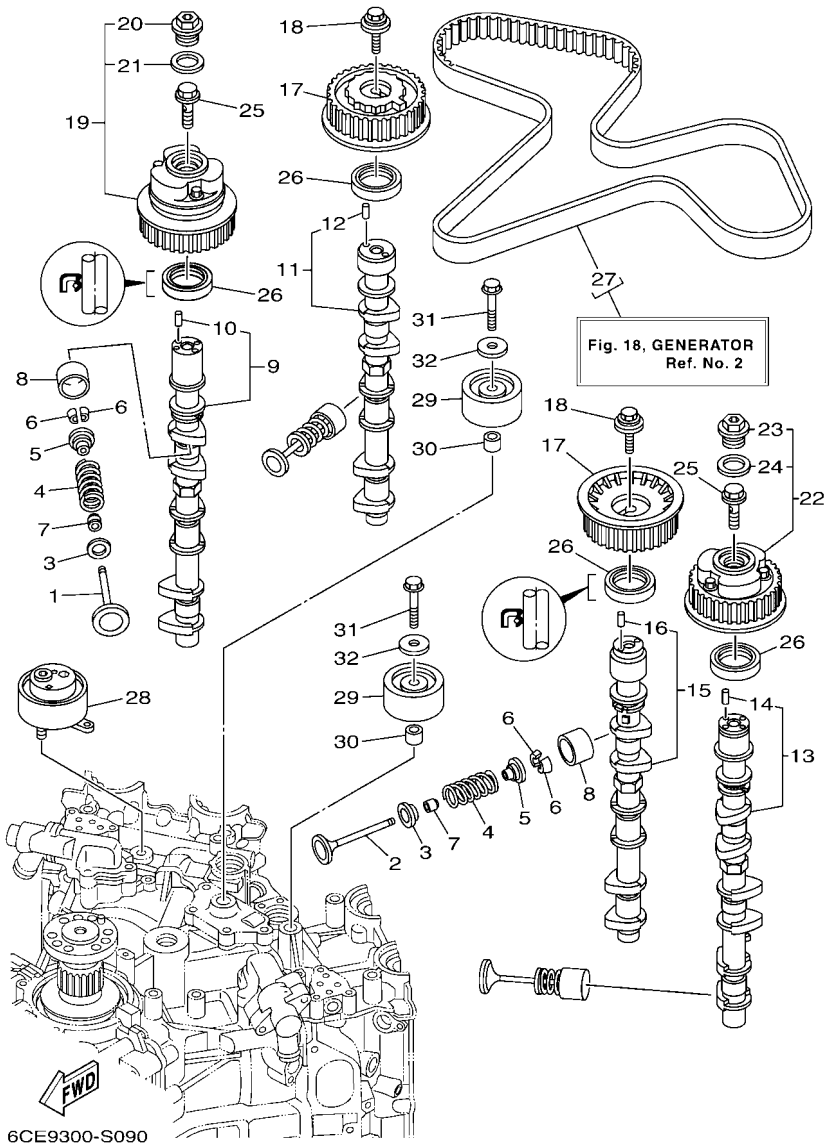

FIG. 9 VALVE SOUPAPE

REF. NO.	PART NO. N° PIECES	DESCRIPTION DESCRIPTION	ET	ET1	ET2	LET	LET1	REMARKS REMARQUES
21	6P2–12663–00	.GASKET .JOINT	1	1	1	1	1	
22	6CB–1264A–01	PULLEY ASSY 2 POULIE COMPLET 2	1	1	1	1	1	
23	6P2–12623–00	.BOLT .BOULON	1	1	1	1	1	
24	6P2–12663–00	.GASKET .JOINT	1	1	1	1	1	
25	6P2–12615–00	BOLT BOULON	2	2	2	2	2	
26	93102–38008	OIL SEAL JOINT SPY	4	4	4	4	4	
27	6CB–W4624–00	BELT (WITH ROTOR BOLTS) COURROIE (AVEC BOULON)	1	1	1	1	1	
28	6CB–11590–02	TENSIONER ASSY TENDEUR (ENS.)	1	1	1	1	1	
29	6CB–15512–00	GEAR, IDLER 1 PIGNON, INTERMEDIAIRE 1	2	2	2	2	2	
30	99530–14016	PIN, DOWEL GOUJON, D'ASSEMBLAGE	2	2	2	2	2	
31	90119–10M07	BOLT, WITH WASHER BOULON, AVEC RONDELLE	2	2	2	2	2	
32	90201–10M01	WASHER, PLATE RONDELLE, PLATE	2	2	2	2	2	

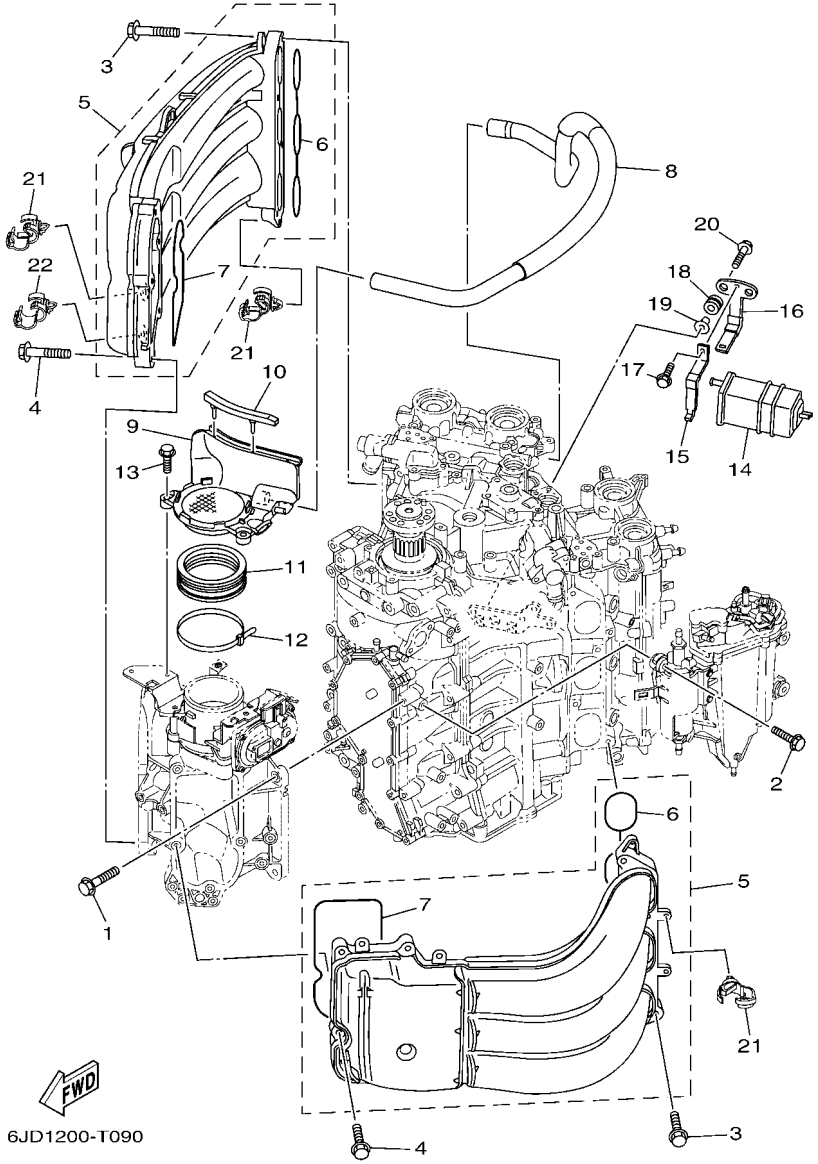

FIG. 10 INTAKE 1 — ADMISSION 1

REF. NO.	PART NO. N° PIECES	DESCRIPTION DESCRIPTION	ET	ET1	ET2	LET	LET1	REMARKS REMARQUES
1	95D75–08030	BOLT, FLANGE DEEP RECESS BOULON FIXATION	4	4	4	4	4	
2	90119–06299	BOLT, WITH WASHER BOULON, AVEC RONDELLE	4	4	4	4	4	
3	90119–08020	BOLT, WITH WASHER BOULON, AVEC RONDELLE	8	8	8	8	8	
4	90105–06035	BOLT, FLANGE BOULON, A COLLERETTE	10	10	10	10	10	
5	6CE–13641–00	MANIFOLD, INTAKE 1 TUBULURE, ADMISSION 1	2	2	2	2	2	
6	6CB–13645–00	.GASKET, MANIFOLD 1 .JOINT, TUBULURE 1	1	1	1	1	1	
7	6CB–13646–00	.GASKET, MANIFOLD 2 .JOINT, TUBULURE 2	1	1	1	1	1	
8	6CB–15373–01	PIPE, BREATHER DURITE DE RENIFLARD	1	1	1	1	1	
9	6CB–14440–01	SILENCER ASSY, INTAKE SIENCIEUX D'ADMISSION	1	1	1	1	1	
10	6CB–85547–00	DAMPER AMORTISSEUR	1	1	1	1	1	
11	6AW–1441J–00	PIPE, SILENCER DURITE, DE SILENCIEUX	1	1	1	1	1	
12	90464–99004	CLAMP BRIDE	1	1	1	1	1	
13	95D95–06020	BOLT, FLANGE DEEP RECESS BOULON FIXATION	2	2	2	2	2	
14	69J–24170–00	CANISTER ASSY BANDE, RASERVOIR A ESSENCE	1	1	1	1	1	
15	69J–2419A–01	HOLDER SUPPORT	1	1	1	1	1	
16	69J–2134X–00	BRACKET, CANISTER SUPPORT	1	1	1	1	1	
17	97E95–06516	BOLT, HEXAGON W/W DEEP RECESS VIS HEXAGONAL AVC RONDELLE	1	1	1	1	1	
18	90480–10M23	GROMMET PASSE-FIL	2	2	2	2	2	
19	90387–06289	COLLAR COLLERETTE	2	2	2	2	2	
20	90119–06309	BOLT, WITH WASHER BOULON, AVEC RONDELLE	2	2	2	2	2	
21	90464–13249	CLAMP BRIDE	8	8	8	8	8	
22	90464–20181	CLAMP BRIDE	1	1	1	1	1	

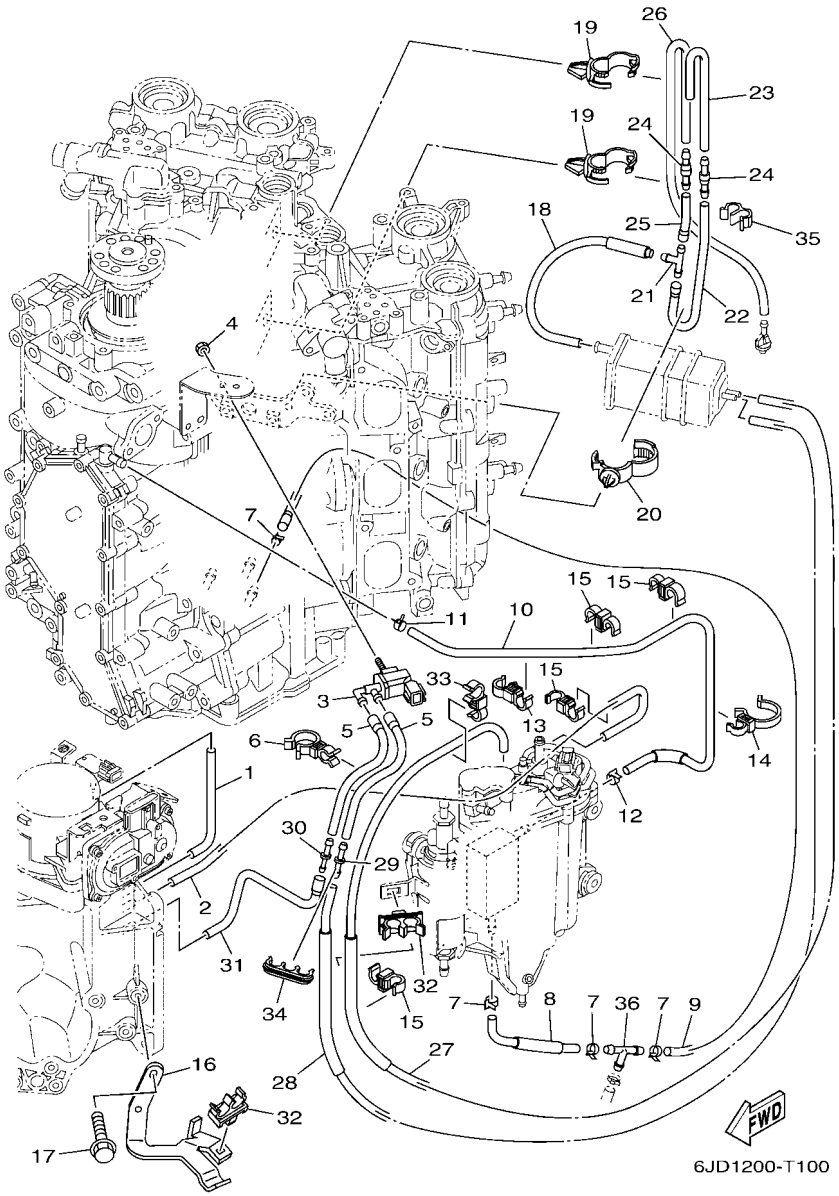

FIG. 11 INTAKE 2 — ADMISSION 2

REF. NO.	PART NO. N° PIECES	DESCRIPTION DESCRIPTION	ET	ET1	ET2	LET	LET1	REMARKS REMARQUES
1	6CB–13533–00	HOSE, VACUUM SENSING 4 DURITE 4	1	1	1	1	1	
2	6CB–13532–10	HOSE, VACUUM SENSING 3 DURITE 3	1	1	1	1	1	
3	6C5–86120–00	SOLENOID VALVE ASSY SOLENOIDE	1	1	1	1	1	
4	95380–06600	NUT, HEXAGON ECROU	1	1	1	1	1	
5	6CB–2416A–00	HOSE DURITE	2	2	2	2	2	
6	90464–23001	CLAMP BRIDE	2	2	2	2	2	
7	90465–11M10	CLAMP BRIDE	4	4	4	4	4	
8	6CE–12482–10	PIPE 2 DURITE 2	1	1	1	1	1	
9	90445–097F7	HOSE (L780) DURITE (L780)	1	1	1	1	1	
10	6CB–12484–00	PIPE 4 DURITE 4	1	1	1	1	1	
11	90467–090A0	CLIP JONC	1	1	1	1	1	
12	90465–11M10	CLAMP BRIDE	1	1	1	1	1	
13	90464–12010	CLAMP BRIDE	1	1	1	1	1	
14	90464–26002	CLAMP BRIDE	1	1	1	1	1	
15	90464–09013	CLAMP BRIDE	4	4	4	4	4	
16	6CB–13782–00	STAY SUPPORT	1	1	1	1	1	
17	95D95–06016	BOLT, FLANGE DEEP RECESS BOULON FIXATION	2	2	2	2	2	
18	6CB–13545–00	HOSE 1 DURITE 1	1	1	1	1	1	
19	90464–20181	CLAMP BRIDE	2	2	2	2	2	
20	90464–07209	CLAMP BRIDE	1	1	1	1	1	
21	688–24378–00	PIPE, JOINT 3 DURITE RACCORDEMENT 3	1	1	1	1	1	
22	6CB–13546–01	HOSE 2 DURITE 2	1	1	1	1	1	
23	6CB–13547–00	HOSE 3 DURITE 3	1	1	1	1	1	
24	6E5–21744–00	BREATHER RENIFLARD	2	2	2	2	2	
25	6CB–13548–00	HOSE, AIR 4 DURITE, A AIR 4	1	1	1	1	1	
26	6CB–12483–01	PIPE 3 DURITE 3	1	1	1	1	1	
27	6CB–1475A–00	PIPE 1 DURITE 1	1	1	1	1	1	

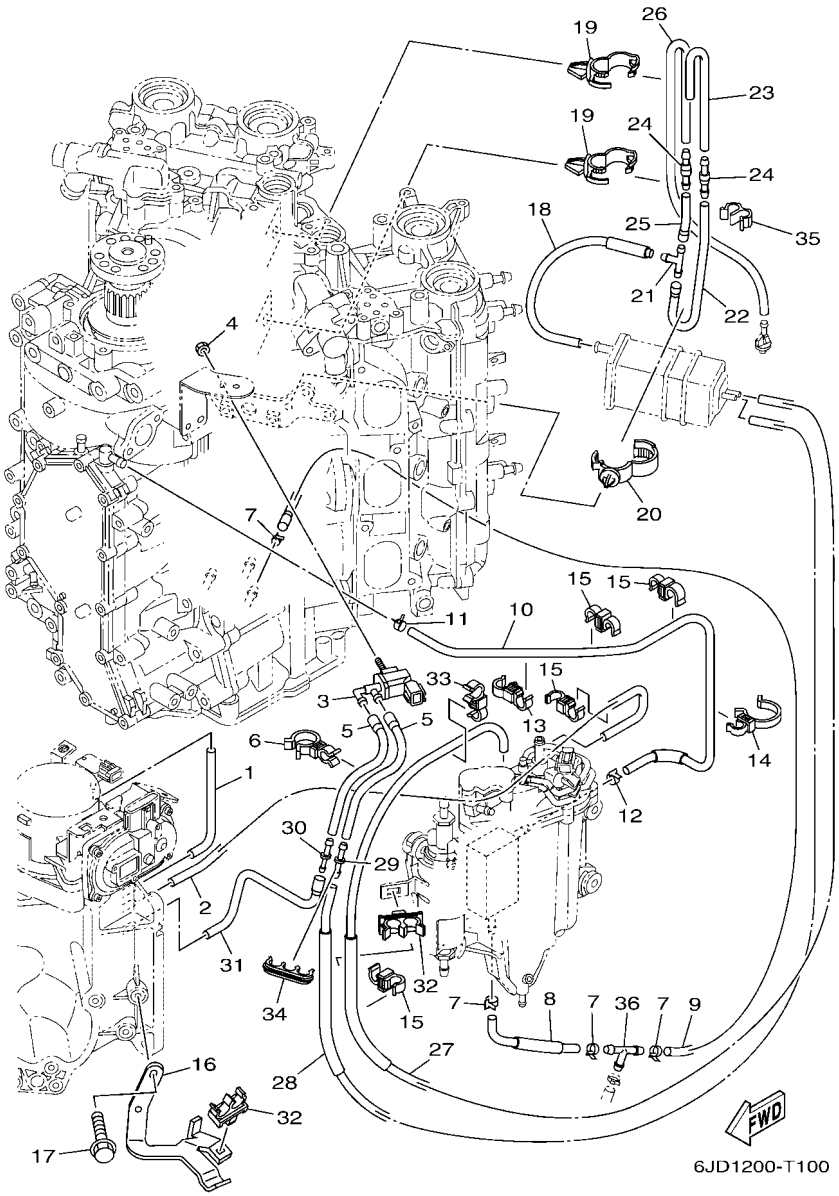

FIG. 11 INTAKE 2 — ADMISSION 2

REF. NO.	PART NO. N° PIECES	DESCRIPTION DESCRIPTION	ET	ET1	ET2	LET	LET1	REMARKS REMARQUES
28	6CB–1475F–00	PIPE 3 DURITE 3	1	1	1	1	1	
29	6G8–24376–00	PIPE, JOINT 1 DURITE 1, RACCORDEMENT	1	1	1	1	1	
30	6EK–14989–00	ORIFICE, AIR VENT OR1F1CE	1	1	1	1	1	
31	6CB–1475G–10	PIPE 4 DURITE 4	1	1	1	1	1	
32	90464–11012	CLAMP BRIDE	2	2	2	2	2	
33	90464–12010	CLAMP BRIDE	1	1	1	1	1	
34	90464–10011	CLAMP BRIDE	1	1	1	1	1	
35	90464–07M20	CLAMP BRIDE	1	1	1	1	1	
36	688–24378–00	PIPE, JOINT 3 DURITE RACCORDEMENT 3	1	1	1	1	1	

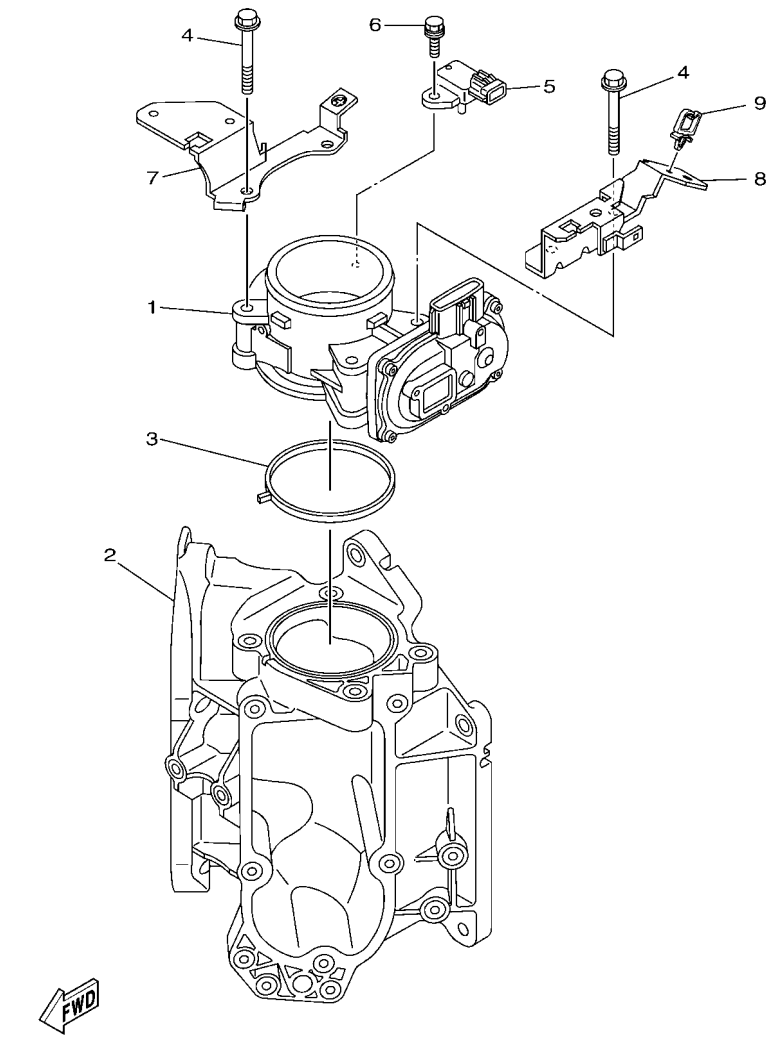

FIG. 12 THROTTLE BODY ASSY 1 — CARTER D'ACCELERATEUR 1

REF. NO.	PART NO. N° PIECES	DESCRIPTION DESCRIPTION	ET	ET1	ET2	LET	LET1	REMARKS REMARQUES
1	6CB–13751–10	BODY, THROTTLE 1 CARTER 1	1	1	1	1	1	
2	6CB–13711–00	MIXING BODY CHAMBRE DE MELANGE	1	1	1	1	1	
3	6CB–13556–00	GASKET, MANIFOLD JOINT, TUBULURE	1	1	1	1	1	
4	95D75–08060	BOLT, FLANGE DEEP RECESS BOULON FIXATION	4	4	4	4	4	
5	6P2–82380–00	SENSOR, PRESSURE SONDE DE PRESSION	1	1	1	1	1	
6	97E75–06620	BOLT, HEXAGON W/W DEEP RECESS VIS HEXAGONAL AVC RONDELLE	1	1	1	1	1	
7	6CB–13898–20	HOLDER SUPPORT	1	1	1	1	1	
8	6CB–13898–11	HOLDER SUPPORT	1	1	1	1	1	
9	90464–08004	CLAMP BRIDE	1	1	1	1	1	

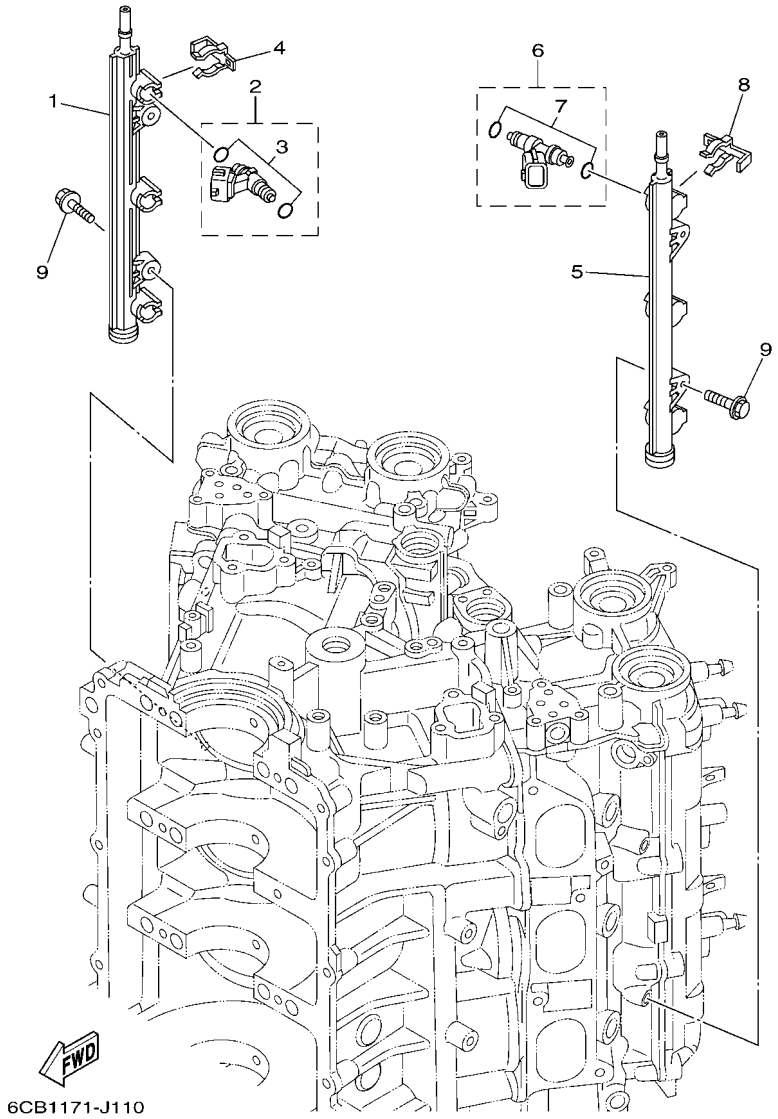

FIG. 13 THROTTLE BODY ASSY 2 — CARTER D'ACCELERATEUR 2

REF. NO.	PART NO. N° PIECES	DESCRIPTION DESCRIPTION	ET	ET1	ET2	LET	LET1	REMARKS REMARQUES
1	6CB–13161–10	PIPE, DELIVERY 1 DURITE REFOULEMENT 1	1	1	1	1	1	
2	6AW–13761–00	INJECTOR INJECTEUR	3	3	3	3	3	
3	6AW–1410B–00	.PACKING KIT .POCHETTE DE JOINTS	1	1	1	1	1	
4	6CB–13577–00	CLIP AGRAFE	3	3	3	3	3	
5	6CB–13171–10	PIPE, DELIVERY 2 DURITE REFOULEMENT	1	1	1	1	1	
6	6AW–13761–00	INJECTOR INJECTEUR	3	3	3	3	3	
7	6AW–1410B–00	.PACKING KIT .POCHETTE DE JOINTS	1	1	1	1	1	
8	6CB–13577–00	CLIP AGRAFE	3	3	3	3	3	
9	90105–06M08	BOLT, FLANGE BOULON, A COLLERETTE	4	4	4	4	4	

FIG. 14 FUEL INJECTION PUMP 1 POMPE A INJECTEUR 1

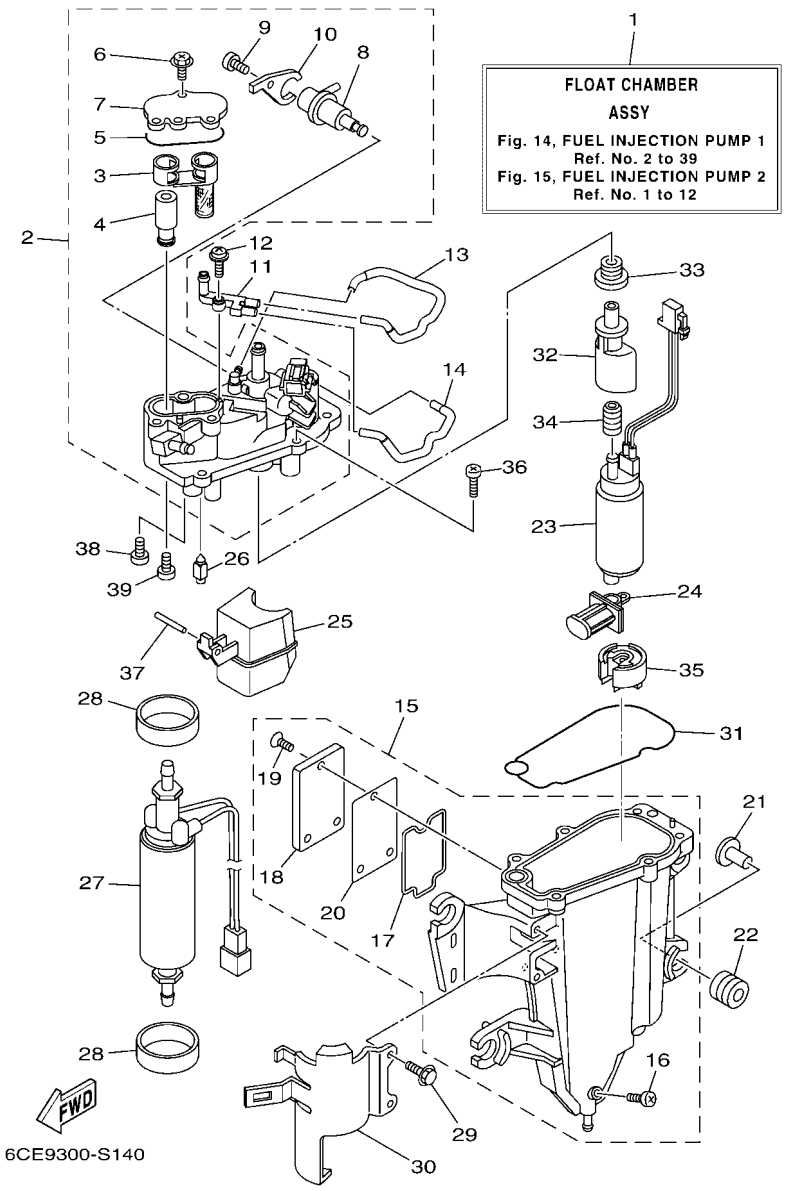

REF. NO.	PART NO. N° PIECES	DESCRIPTION DESCRIPTION	ET	ET1	ET2	LET	LET1	REMARKS REMARQUES
1	6CB–14180–12	FLOAT CHAMBER ASSY CUVE DE FLOTTEUR	1	1	1	1	1	
2	6CB–14182–02	COVER, FLOAT CHAMBER COUVERCLE, CUVE DE FLOTTEUR	1	1	1	1	1	
3	6CB–24501–01	.FILTER, FUEL .FILTRE	1	1	1	1	1	
4	6CB–24460–00	.RELIEF VALVE ASSY .SOUPAPE DE SECURITE COMPLET	1	1	1	1	1	
5	6CB–13016–00	.O-RING .JOINT TORIQUE	1	1	1	1	1	
6	6CB–14216–00	.SCREW .VIS	3	3	3	3	3	
7	6CB–24217–00	.COVER .COUVERCLE	1	1	1	1	1	
8	6CB–13906–01	.REGULATOR, PRESSURE .REGULATEUR DE PRESSION	1	1	1	1	1	
9	6CB–14564–00	.SCREW .VIS	1	1	1	1	1	
10	6CB–14146–00	.PLATE .PLAQUE	1	1	1	1	1	
11	68V–24379–10	PIPE, JOINT 4 DURITE RACCORDEMENT 4	1	1	1	1	1	
12	68V–14216–00	SCREW VIS	1	1	1	1	1	
13	6CB–1475H–00	PIPE 5 DURITE 5	1	1	1	1	1	
14	6CB–1475J–00	PIPE 6 DURITE 6	1	1	1	1	1	
15	6CB–14181–01	BODY, FLOAT CHAMBER 1 CORPS, CUVE DE FLOTTEUR 1	1	1	1	1	1	
16	6P2–14191–00	.PLUG, DRAIN .PLOT, VIDANGE	1	1	1	1	1	
17	6CB–14239–00	.SEAL .JOINT	1	1	1	1	1	
18	6CB–24452–10	.COVER .COUVERCLE	1	1	1	1	1	
19	6CB–14429–01	.SCREW .VIS	3	3	3	3	3	
20	6CB–24482–00	.GASKET 1 .JOINT 1	1	1	1	1	1	
21	63P–13716–00	COLLAR COLLERETTE	4	4	4	4	4	
22	6CB–13593–00	DAMPER AMORTISSEUR	4	4	4	4	4	
23	6CB–13907–11	FUEL PUMP COMP. POMPE A CARBURANT COMP.	1	1	1	1	1	
24	63P–13915–00	FILTER FILTRE	1	1	1	1	1	
25	6CB–14985–00	FLOAT FLOTTEUR	1	1	1	1	1	
26	6CB–14546–00	VALVE, NEEDLE POINTEAU	1	1	1	1	1	
27	6CB–24410–01	FUEL PUMP ASSY POMPE A ESSENCE	1	1	1	1	1	

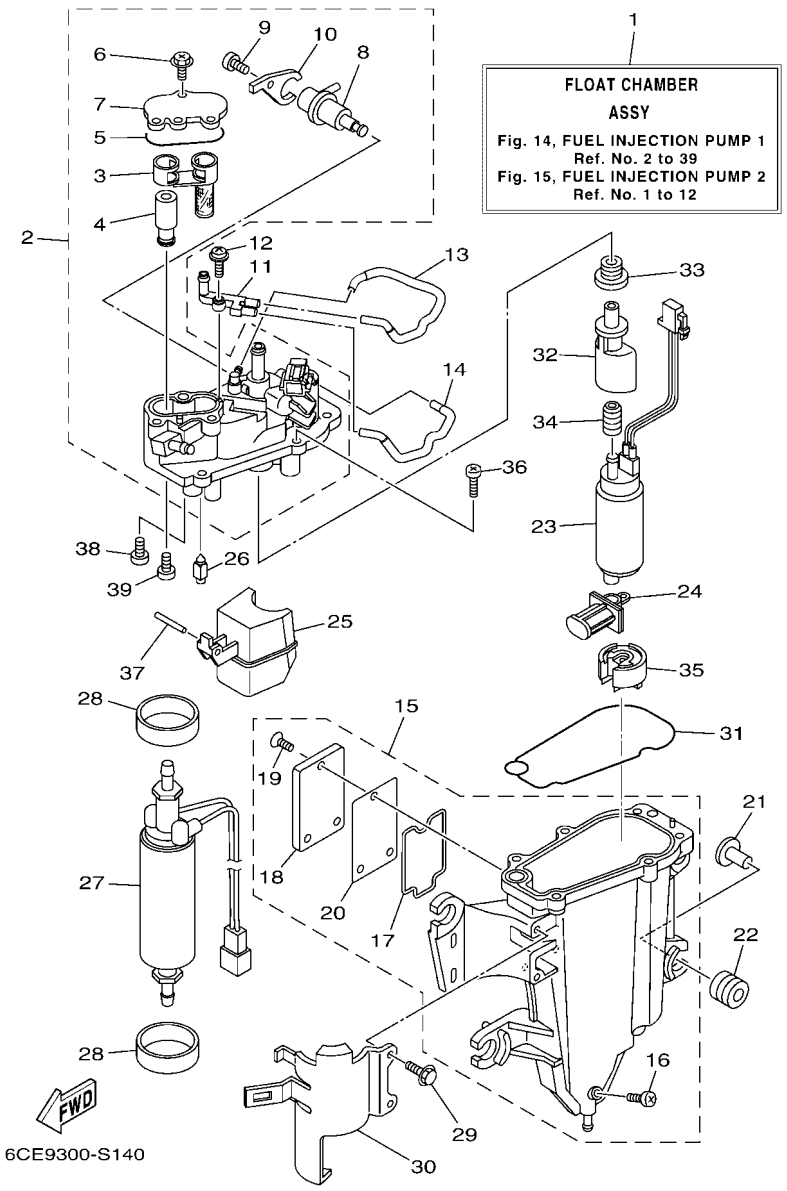

FIG. 14 FUEL INJECTION PUMP 1 — POMPE A INJECTEUR 1

REF. NO.	PART NO. N° PIECES	DESCRIPTION DESCRIPTION	ET	ET1	ET2	LET	LET1	REMARKS REMARQUES
28	6CB–24492–00	BUSH, FUEL PUMP BAGUE	2	2	2	2	2	
29	6CB–24592–00	BOLT BOLTE	2	2	2	2	2	
30	6CB–24491–00	BRACKET, FUEL PUMP SUPPORT, POMPE A ESSENCE	1	1	1	1	1	
31	6CB–14984–00	GASKET, FLOAT CHAMBER JOINT, CUVE DE FLOTTEUR	1	1	1	1	1	
32	6AW–13132–00	JOINT RACCORD	1	1	1	1	1	
33	6CB–1447B–00	BUSH 1 DOUILLE 1	1	1	1	1	1	
34	6AW–13781–00	DAMPER, PUMP AMORTISSEUR, POMPE	1	1	1	1	1	
35	6AW–13784–00	COVER, PUMP COUVERCLE, POMPE	1	1	1	1	1	
36	63P–14567–00	SCREW VIS	6	6	6	6	6	
37	6P2–14386–00	PIN, FLOAT AXE, FLOTTEUR	1	1	1	1	1	
38	4SV–24453–00	SCREW VIS	1	1	1	1	1	
39	98507–04008	SCREW, PAN HEAD VIS, TETE TRONCONIQUE	1	1	1	1	1	

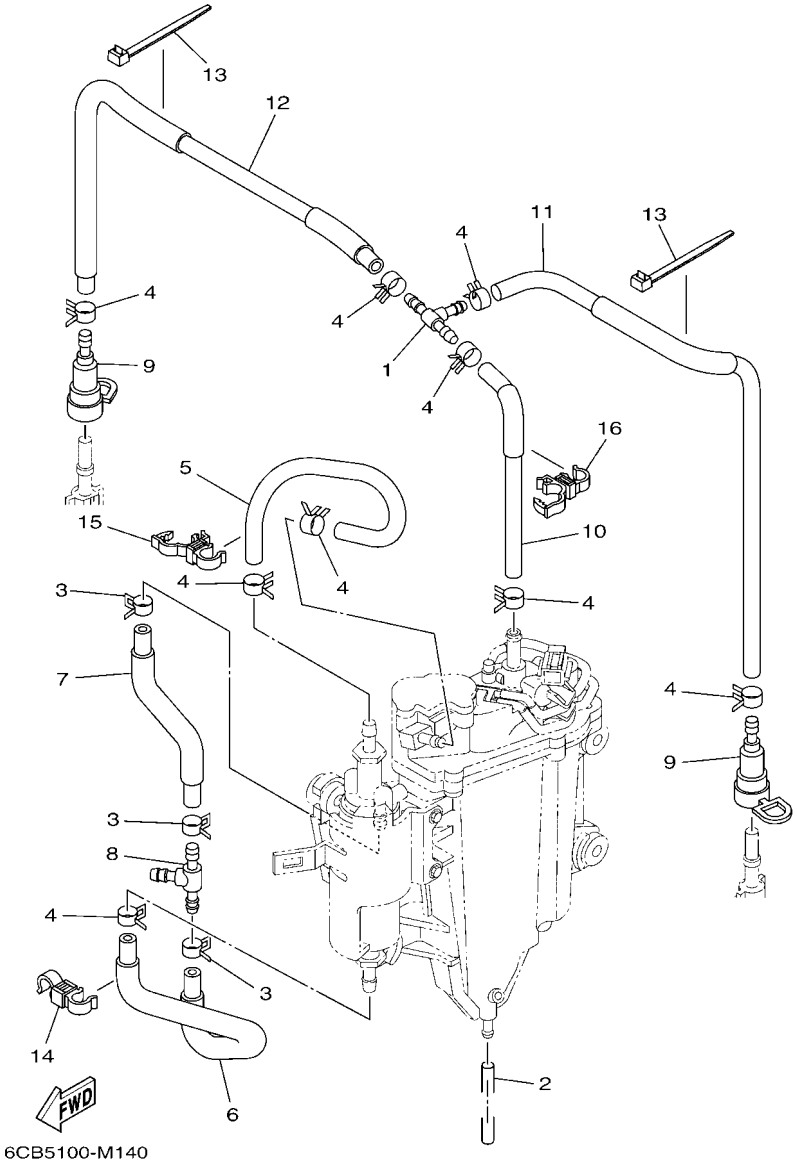

FIG. 15 FUEL INJECTION PUMP 2 — POMPE A INJECTEUR 2

REF. NO.	PART NO. N° PIECES	DESCRIPTION DESCRIPTION	ET	ET1	ET2	LET	LET1	REMARKS REMARQUES
1	6CB–24461–00	PIPE, JOINT DURITE, RACCORDEMENT	1	1	1	1	1	
2	6P2–14149–00	PIPE DURITE	1	1	1	1	1	
3	69J–14137–00	CLIP JONC	3	3	3	3	3	
4	68V–13577–00	CLIP AGRAFE	9	9	9	9	9	
5	6CB–24324–00	PIPE 13 DURITE 13	1	1	1	1	1	
6	6CB–24317–00	PIPE 7 DURITE 7	1	1	1	1	1	
7	6CB–24323–00	PIPE 12 DURITE 12	1	1	1	1	1	
8	6E5–24378–00	PIPE, JOINT 3 DURITE, RACCORDEMENT 3	1	1	1	1	1	
9	60E–24300–01	FUEL PIPE JOINT DURITE RACCORDEMT. A ESSENCE	2	2	2	2	2	
10	6CB–13971–01	PIPE, FUEL 1 TUBE 1, CARBURANT	1	1	1	1	1	
11	6CB–13974–01	PIPE, FUEL 4 TUBE 4, CARBURANT	1	1	1	1	1	
12	6CB–13972–00	PIPE, FUEL 2 TUBE 2, CARBURANT	1	1	1	1	1	
13	90465–14M66	CLAMP BRIDE	2	2	2	2	2	
14	90464–12009	CLAMP BRIDE	1	1	1	1	1	
15	90464–12012	CLAMP BRIDE	1	1	1	1	1	
16	90464–12012	CLAMP BRIDE	1	1	1	1	1	

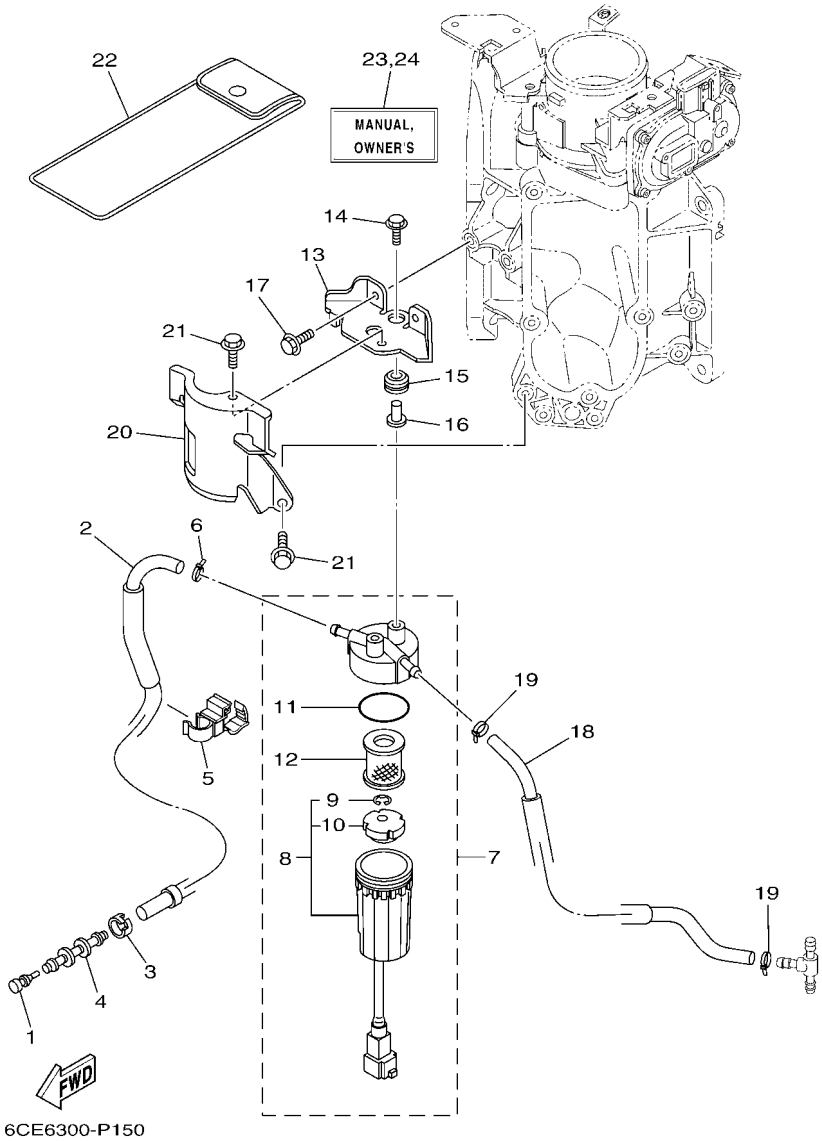

FIG. 16 FUEL 1 — CARBURANT 1

REF. NO.	PART NO. N° PIECES	DESCRIPTION DESCRIPTION	ET	ET1	ET2	LET	LET1	REMARKS REMARQUES
1	689–85547–00	DAMPER AMORTISSEUR	1	1	1	1	1	
2	6CB–24314–11	PIPE 4 DURITE 4	1	1	1	1	1	
3	6E5–24351–51	BAND 1 COLLIER 1	1	1	1	1	1	
4	6AW–24377–01	PIPE, JOINT 2 DURITE RACCORDEMENT 2	1	1	1	1	1	
5	90464–12012	CLAMP BRIDE	1	1	1	1	1	
6	90465–11M10	CLAMP BRIDE	1	1	1	1	1	
7	6P3–24560–22	FILTER ASSY ENS FILTRE	1	1	1	1	1	
8	6P3–24562–21	.CUP, FILTER .CUVETTE, FILTRE	1	1	1	1	1	
9	6P3–24519–00	..CLIP ..JONC	1	1	1	1	1	
10	6P3–24469–00	..FLOAT, WATER LEVEL ..FLOTTEUR	1	1	1	1	1	
11	6P3–24564–00	.GASKET .JOINT	1	1	1	1	1	
12	6P3–24563–01	.ELEMENT, FILTER .ELEMENT, FILTRE	1	1	1	1	1	
13	6CB–24566–00	BRACKET, FILTER SUPPORT, FILTRE	1	1	1	1	1	
14	90119–06309	BOLT, WITH WASHER BOULON, AVEC RONDELLE	2	2	2	2	2	
15	90480–10M23	GROMMET PASSE-FIL	2	2	2	2	2	
16	90387–06289	COLLAR COLLERETTE	2	2	2	2	2	
17	95D95–06016	BOLT, FLANGE DEEP RECESS BOULON FIXATION	2	2	2	2	2	
18	6CB–24313–10	PIPE 3 DURITE 3	1	1	1	1	1	
19	90465–11M10	CLAMP BRIDE	2	2	2	2	2	
20	6CB–24596–01	COVER COUVERCLE	1	1	1	1	1	
21	95D95–06014	BOLT, FLANGE DEEP RECESS BOULON FIXATION	2	2	2	2	2	
22	69J–28100–02	TOOL KIT TROUSSE A OUTILS	1	1	1	1	1	AP AP
23	6CE–28199–78–E0	MANUAL,OWNER'S MANUEL D'UTILISATION	1	1	1	1	1	UR (E) UR (E)
	6CE–28199–78–F0	MANUAL,OWNER'S MANUEL D'UTILISATION	1	1	1	1	1	UR (F) UR (F)
	6CE–28199–78–S0	MANUAL,OWNER'S MANUEL D'UTILISATION	1	1	1	1	1	UR (ES) UR (ES)
	6CE–28199–78–G0	MANUAL,OWNER'S MANUEL D'UTILISATION	1	1	1	1	1	UR (D) UR (D)
	6CE–28199–78–D0	MANUAL,OWNER'S MANUEL D'UTILISATION	1	1	1	1	1	UR (NL) UR (NL)

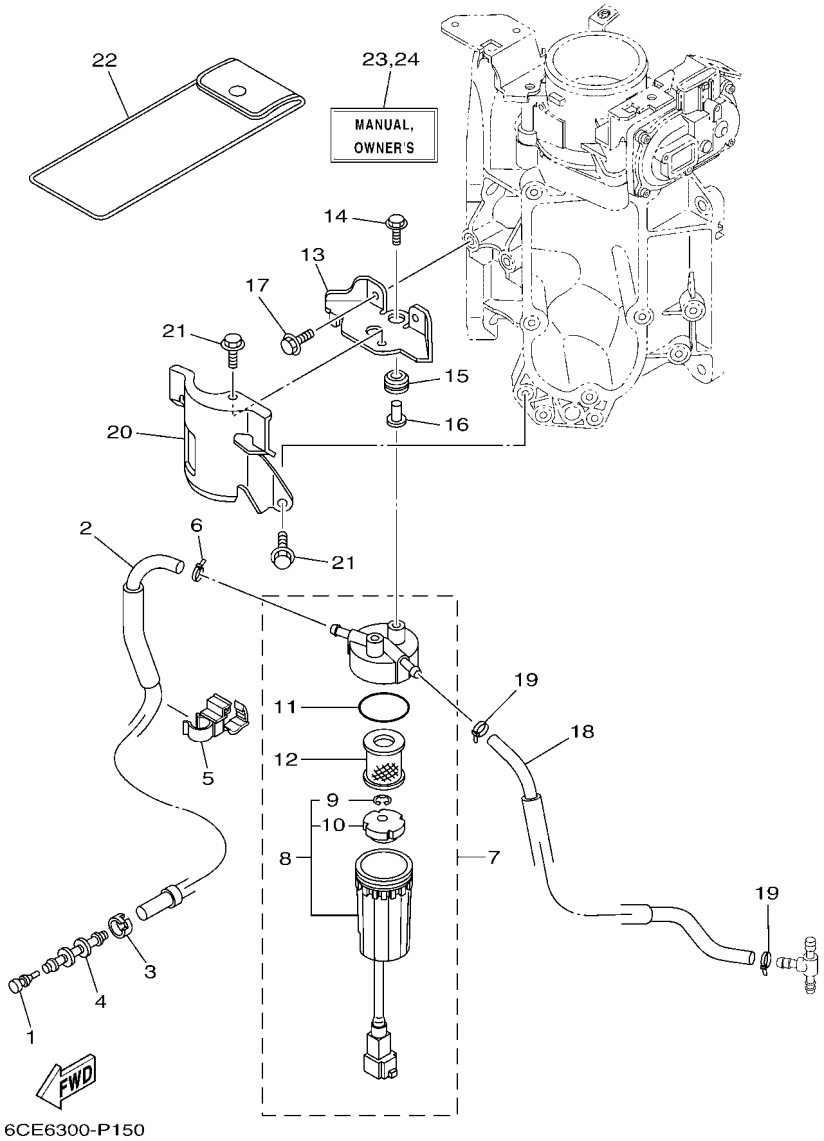

FIG. 16 FUEL 1 — CARBURANT 1

REF. NO.	PART NO. N° PIECES	DESCRIPTION DESCRIPTION	ET	ET1	ET2	LET	LET1	REMARKS REMARQUES
23	6CE–28199–78–H0	MANUAL,OWNER'S MANUEL D'UTILISATION	1	1	1	1	1	UR (I) UR (I)
24	6CE–28199–88–K0	MANUAL,OWNER'S MANUEL D'UTILISATION	1	1	1	1	1	UR (DK) UR (DK)
	6CE–28199–88–R0	MANUAL,OWNER'S MANUEL D'UTILISATION	1	1	1	1	1	UR (GR) UR (GR)
	6CE–28199–88–P0	MANUAL,OWNER'S MANUEL D'UTILISATION	1	1	1	1	1	UR (P) UR (P)
	6CE–28199–88–N0	MANUAL,OWNER'S MANUEL D'UTILISATION	1	1	1	1	1	UR (N) UR (N)
	6CE–28199–88–M0	MANUAL,OWNER'S MANUEL D'UTILISATION	1	1	1	1	1	UR (S) UR (S)
	6CE–28199–88–L0	MANUAL,OWNER'S MANUEL D'UTILISATION	1	1	1	1	1	UR (SF) UR (SF)

FIG. 17 FUEL 2 — CARBURANT 2

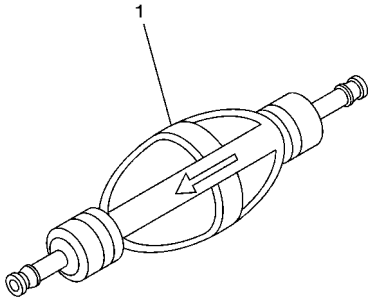

68V9110-J110

REF. NO.	PART NO. N° PIECES	DESCRIPTION DESCRIPTION	ET	ET1	ET2	LET	LET1	REMARKS REMARQUES
1	6AW–24360–01	PRIMER PUMP ASSY POMPE D'AMORCAGE	1	1	1	1	1	AP AP

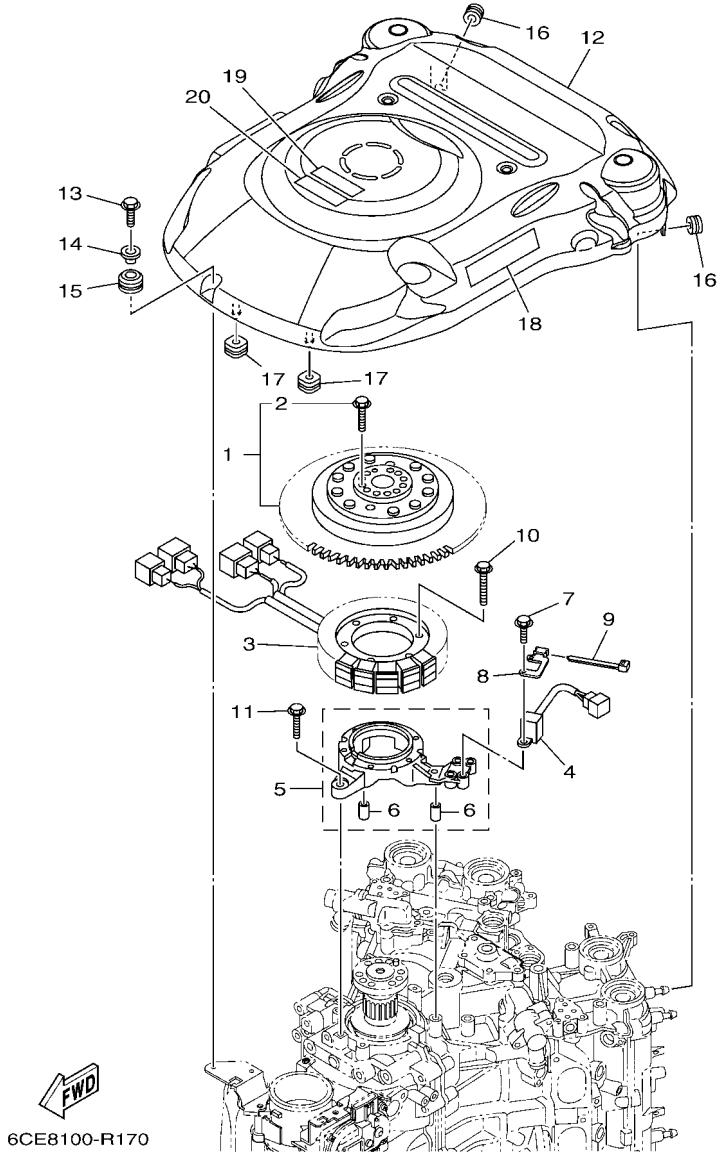

FIG. 18 GENERATOR — GENERATRICE

REF. NO.	PART NO. N° PIECES	DESCRIPTION DESCRIPTION	ET	ET1	ET2	LET	LET1	REMARKS REMARQUES
1	6CE–W8145–01	ROTOR ASSY WITH BOLTS ROTOR COMPLET AVEC BOULON	1	1	1	1	1	
2	6EK–W9010–00	.BOLT SET .BOULON ENS.	1	1	1	1	1	
3	6CE–81410–00	STATOR ASSY STATOR COMPLET	1	1	1	1	1	
4	6CB–85580–00	COIL, PULSER BOBINE, PULSEUR	1	1	1	1	1	
5	6CB–85561–00	BASE, MAGNETO BASE, MAGNETO	1	1	1	1	1	
6	99530–08012	.PIN, DOWEL .GOUJON, D'ASSEMBLAGE	2	2	2	2	2	
7	97595–05520	BOLT, WITH WASHER VIS HEXAGONAL AVC RONDELLE	2	2	2	2	2	
8	6CE–85592–00	STAY, PULSER SUPPORT, PULSATION BOBINE	1	1	1	1	1	
9	90465–11M10	CLAMP BRIDE	1	1	1	1	1	
10	95022–06035	BOLT, FLANGE BOULON, A COLLERETTE	6	6	6	6	6	
11	95D95–06030	BOLT, FLANGE DEEP RECESS BOULON FIXATION	4	4	4	4	4	
12	6CE–81337–01	COVER, FLYWHEEL COUVERCLE, VOLANT	1	1	1	1	1	
13	95D95–06020	BOLT, FLANGE DEEP RECESS BOULON FIXATION	1	1	1	1	1	
14	90387–06285	COLLAR COLLERETTE	1	1	1	1	1	
15	90480–15M31	GROMMET PASSE-FIL	1	1	1	1	1	
16	90480–12314	GROMMET PASSE-FIL	2	2	2	2	2	
17	6CB–85516–00	SPACER ENTRETOISE	2	2	2	2	2	
18	6CE–13437–61	MARK, CAUTION MAKER	1	1	1	1	1	
19	6EE–81994–40	LABEL, SAFETY ETIQUETTE, SECURITE	1	1	1	1	1	
20	6EE–81994–50	LABEL, SAFETY ETIQUETTE, SECURITE	1	1	1	1	1	

FIG. 19 ELECTRICAL 1 — PARTIE ELECTRIQUE 1

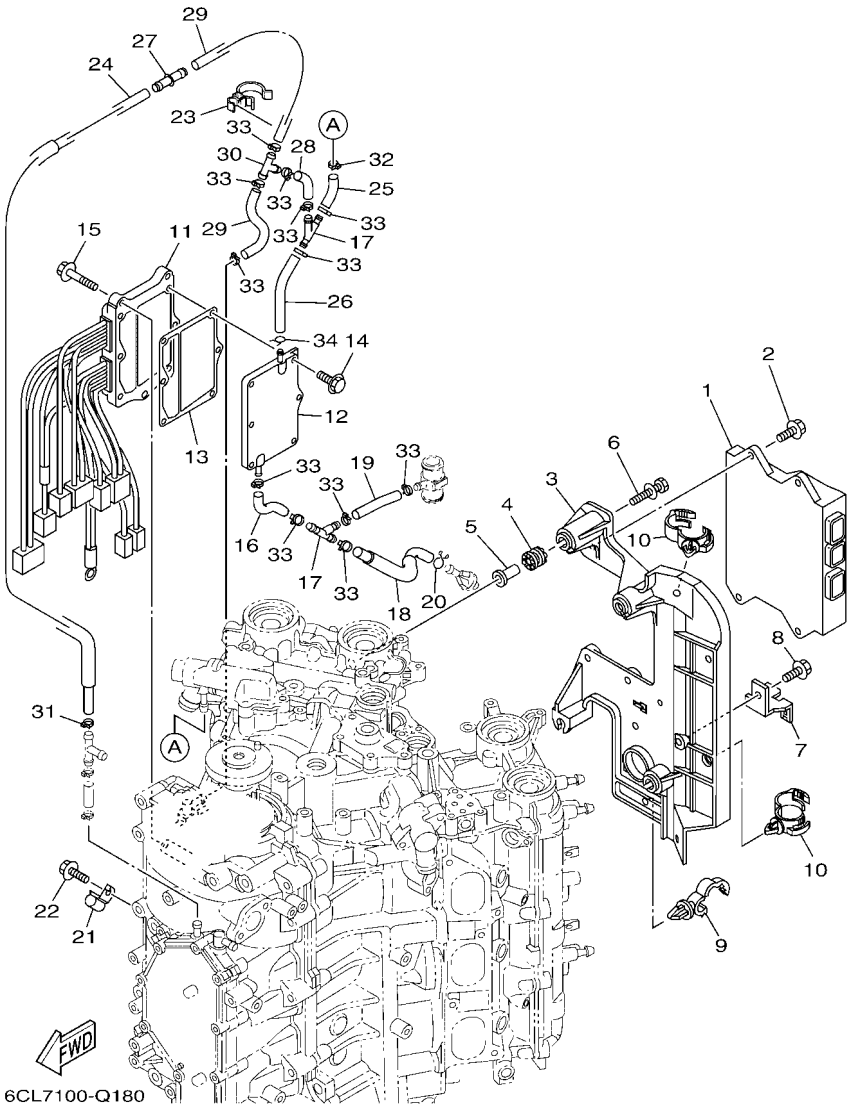

REF. NO.	PART NO. N° PIECES	DESCRIPTION DESCRIPTION	ET	ET1	ET2	LET	LET1	REMARKS REMARQUES
1	6CE–8591A–13	ENGINE CONTROL UNIT ASSY BLOC DE CONTROL	1	1	1	1	1	
2	95D95–06020	BOLT, FLANGE DEEP RECESS BOULON FIXATION	4	4	4	4	4	
3	6CB–82316–01	BRACKET, IGNITION COIL SUPPORT, BOBINE D'ALLUMAGE	1	1	1	1	1	
4	64J–85516–00	SPACER ENTRETOISE	4	4	4	4	4	
5	69M–42758–01	COLLAR ENTRETOISE	4	4	4	4	4	
6	90119–06293	BOLT, WITH WASHER BOULON, AVEC RONDELLE	4	4	4	4	4	
7	6BR–81845–00	PLATE PLAQUE	1	1	1	1	1	
8	95D95–06012	BOLT, FLANGE DEEP RECESS BOULON FIXATION	1	1	1	1	1	
9	90464–13249	CLAMP BRIDE	1	1	1	1	1	
10	90464–20181	CLAMP BRIDE	2	2	2	2	2	
11	6CE–81960–10	RECTIFIER & REGULATOR ASSY REDRESSEUR REGULATEUR CPLT	1	1	1	1	1	
12	6CE–81972–00–9S	COVER, RECTIFIER COUVERCLE, REDRESSEUR	1	1	1	1	1	
13	6CE–81975–00	PLATE, RECTIFIER FITTING PLAQUE, FIXATION DU REDRESSEUR	1	1	1	1	1	
14	90119–06MA3	BOLT, WITH WASHER BOULON, AVEC RONDELLE	6	6	6	6	6	
15	95D95–06025	BOLT, FLANGE DEEP RECESS BOULON FIXATION	3	3	3	3	3	
16	6CE–1248A–00	PIPE 8 DURITE 8	1	1	1	1	1	
17	6CE–24377–00	PIPE, JOINT 2 DURITE RACCORDEMENT 2	2	2	2	2	2	
18	6CE–12483–00	PIPE 3 DURITE 3	1	1	1	1	1	
19	90445–107A5	HOSE (L30) DURITE (L30)	1	1	1	1	1	
20	90467–08M18	CLIP JONC	1	1	1	1	1	
21	90462–06013	CLAMP BRIDE	1	1	1	1	1	
22	95023–06012	BOLT BOULON, A COLLERETTE	1	1	1	1	1	
23	90464–26002	CLAMP BRIDE	1	1	1	1	1	
24	6CE–12481–10	PIPE 1 DURITE 1	1	1	1	1	1	
25	6CE–14872–00	PIPE 2 DURITE 2	1	1	1	1	1	
26	6CE–12485–00	PIPE 5 DURITE 5	1	1	1	1	1	
27	6CE–24376–01	PIPE, JOINT 1 DURITE 1, RACCORDEMENT	1	1	1	1	1	

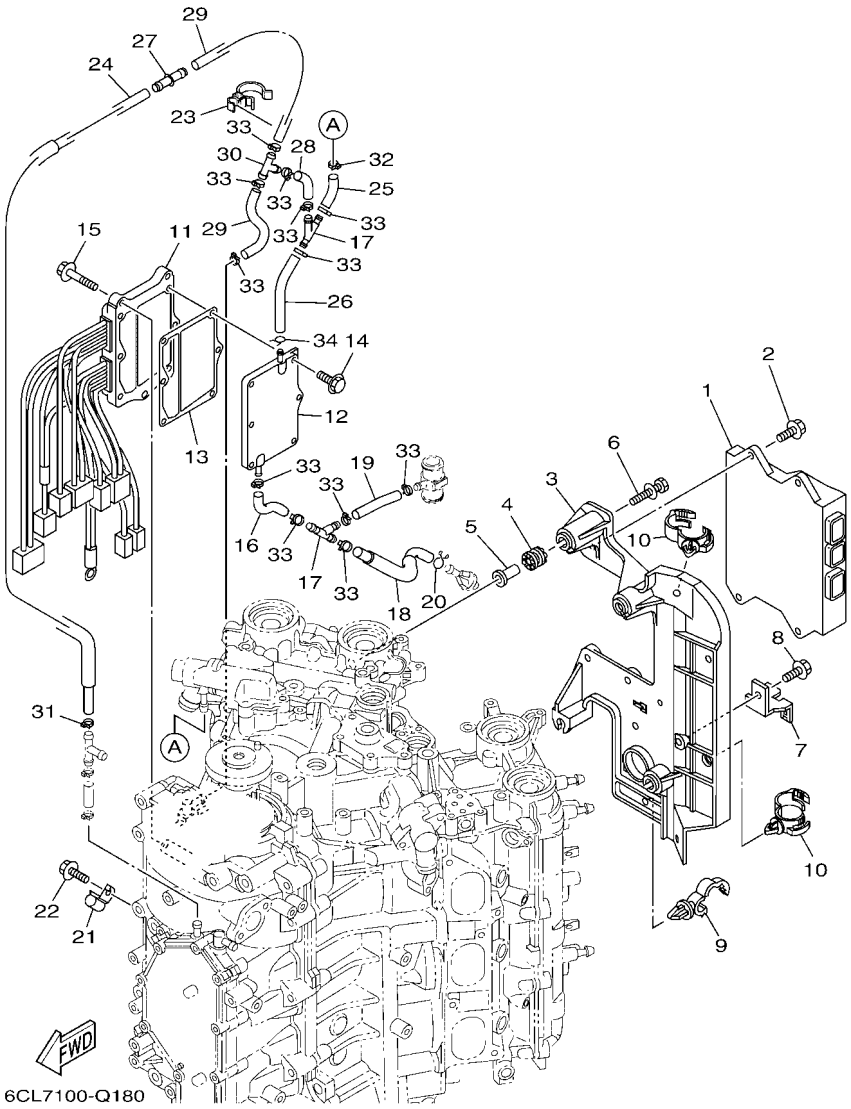

FIG. 19 ELECTRICAL 1 — PARTIE ELECTRIQUE 1

REF. NO.	PART NO. N° PIECES	DESCRIPTION DESCRIPTION	ET	ET1	ET2	LET	LET1	REMARKS REMARQUES
28	6CE–14872–00	PIPE 2 DURITE 2	1	1	1	1	1	
29	90445–09068	HOSE (L110) DURITE (L110)	2	2	2	2	2	
30	688–24378–00	PIPE, JOINT 3 DURITE RACCORDEMENT 3	1	1	1	1	1	
31	90465–11M10	CLAMP BRIDE	1	1	1	1	1	
32	90465–11M10	CLAMP BRIDE	1	1	1	1	1	
33	90465–11M10	CLAMP BRIDE	12	12	12	12	12	
34	90467–08004	CLIP JONC	1	1	1	1	1	

FIG. 20 ELECTRICAL 2 — PARTIE ELECTRIQUE 2

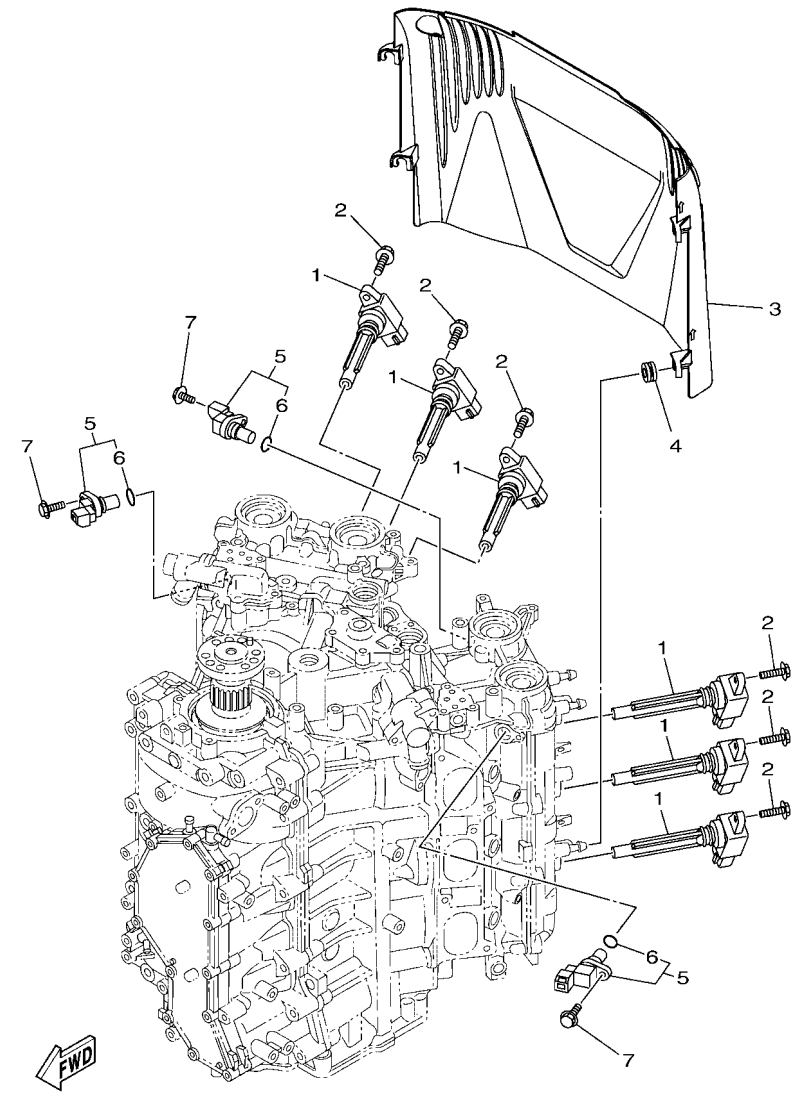

6CE8100-R190

REF. NO.	PART NO. N° PIECES	DESCRIPTION DESCRIPTION	ET	ET1	ET2	LET	LET1	REMARKS REMARQUES
1	6CB–82310–00	IGNITION COIL ASSY BOBINE D'ALLUMAGE	6	6	6	6	6	
2	95D95–06025	BOLT, FLANGE DEEP RECESS BOULON FIXATION	6	6	6	6	6	
3	6CB–82314–00	COVER, IGNITION COIL COUVERCLE, BOBINE D'ALLUMAGE	1	1	1	1	1	
4	90480–12314	GROMMET PASSE-FIL	4	4	4	4	4	
5	6P2–85896–00	SENSOR, CAM POSITION SONDE DE CAME	3	3	3	3	3	
6	6P2–85075–00	.O-RING .JOINT TORIQUE	1	1	1	1	1	
7	97E95–06520	BOLT, HEXAGON W/W DEEP RECESS VIS HEXAGONAL AVC RONDELLE	3	3	3	3	3	

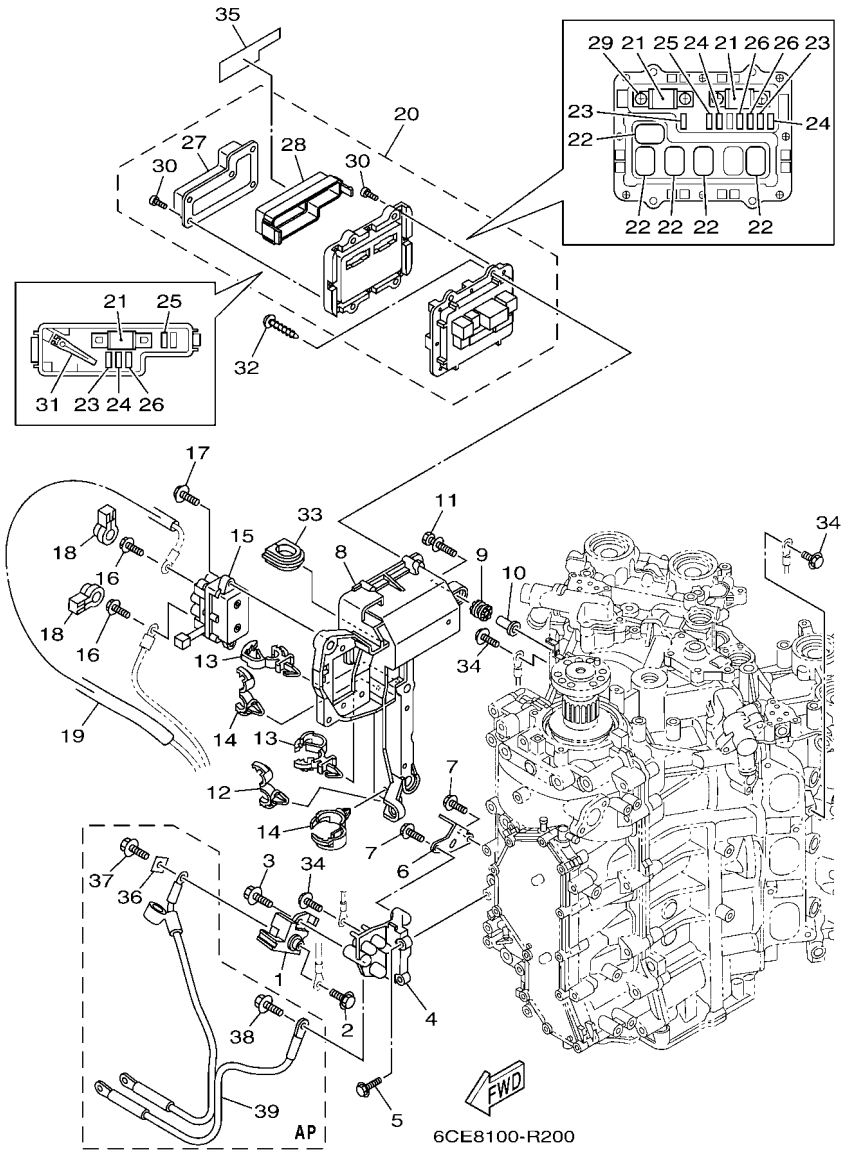

FIG. 21 ELECTRICAL 3 — PARTIE ELECTRIQUE 3

REF. NO.	PART NO. N° PIECES	DESCRIPTION DESCRIPTION	ET	ET1	ET2	LET	LET1	REMARKS REMARQUES
1	6P2–81925–01	TERMINAL BORNE	1	1	1	1	1	
2	95D95–08016	BOLT, FLANGE DEEP RECESS BOULON FIXATION	1	1	1	1	1	
3	95814–08020	BOLT, FLANGE BOULON, A COLLERETTE	1	1	1	1	1	
4	6CB–81929–00	BRACKET, TERMINAL SUPPORT	1	1	1	1	1	
5	95D95–06020	BOLT, FLANGE DEEP RECESS BOULON FIXATION	2	2	2	2	2	
6	6CE–82588–00	PLATE PLAQUE	1	1	1	1	1	
7	95D95–06016	BOLT, FLANGE DEEP RECESS BOULON FIXATION	2	2	2	2	2	
8	6CB–81948–02	BRACKET SUPPORT	1	1	1	1	1	
9	64J–85516–00	SPACER ENTRETOISE	5	5	5	5	5	
10	69M–42758–01	COLLAR ENTRETOISE	5	5	5	5	5	
11	90119–06293	BOLT, WITH WASHER BOULON, AVEC RONDELLE	5	5	5	5	5	
12	90464–13249	CLAMP BRIDE	1	1	1	1	1	
13	90464–12183	CLAMP BRIDE	2	2	2	2	2	
14	90464–20181	CLAMP BRIDE	2	2	2	2	2	
15	6AW–81950–00	RELAY ASSY RELAIS COMPLET	1	1	1	1	1	
16	97E95–06610	BOLT, HEXAGON W/W DEEP RECESS VIS HEXAGONAL AVC RONDELLE	2	2	2	2	2	
17	97513–06520	BOLT, WITH WASHER VIS HEXAGONAL AVC RONDELLE	2	2	2	2	2	
18	6P2–8183X–00	CAP, TERMINAL COUVERCLE, BORNE	2	2	2	2	2	
19	90446–15003	HOSE (L100) DURITE (L100)	1	1	1	1	1	
20	6CE–82170–11	FUSE BOX ASSY BOITE A FUSIBLES	1	1	1	1	1	
21	6CE–82151–00	.FUSE (100A) .FUSIBLE (100A)	3	3	3	3	3	
22	6AW–8195A–00	.RELAY ASSY .RELAIS COMPLET	5	5	5	5	5	
23	67F–82151–40	.FUSE (10A) .FUSIBLE (10A)	3	3	3	3	3	
24	67F–82151–50	.FUSE (15A) .FUSIBLE (15A)	3	3	3	3	3	
25	67F–82151–00	.FUSE (20A) .FUSIBLE (20A)	2	2	2	2	2	
26	67F–82151–10	.FUSE (30A) .FUSIBLE (30A)	3	3	3	3	3	
27	6CB–81639–10	.COVER .COUVERCLE	1	1	1	1	1	

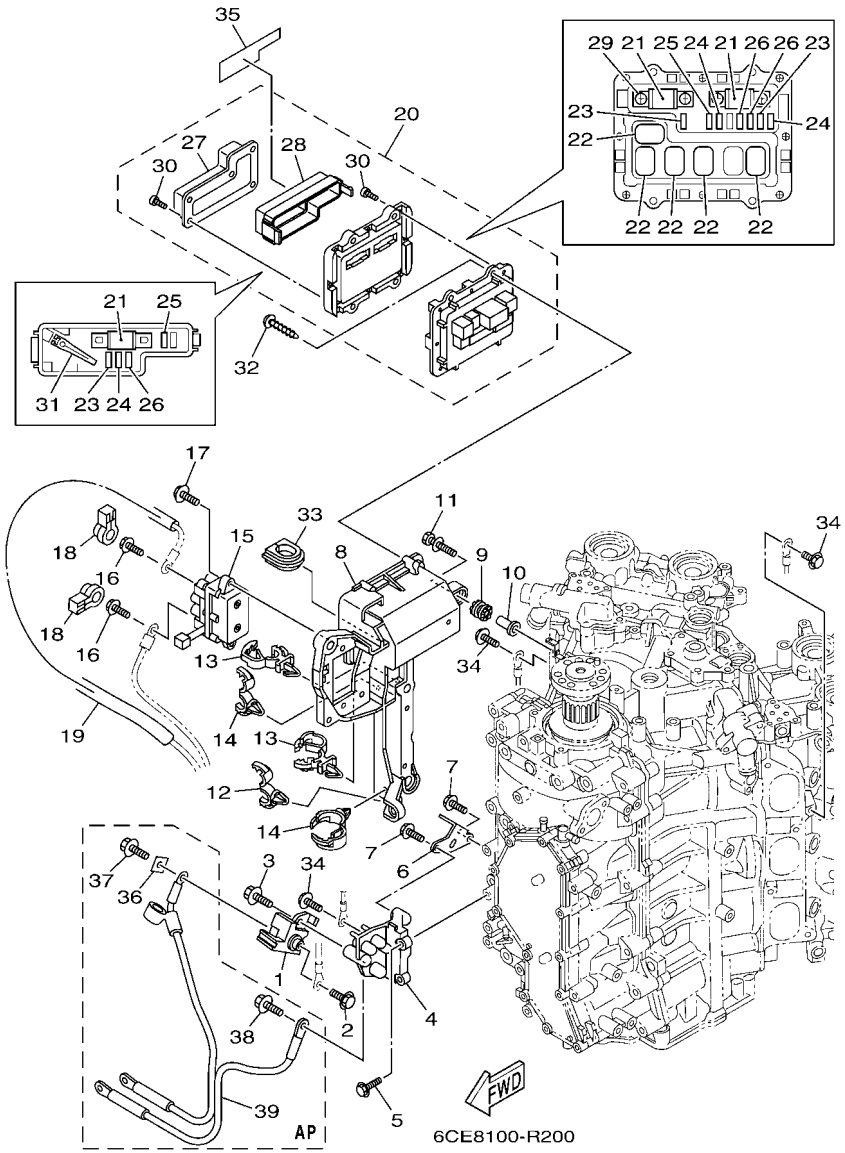

FIG. 21 ELECTRICAL 3 — PARTIE ELECTRIQUE 3

REF. NO.	PART NO. N° PIECES	DESCRIPTION DESCRIPTION	ET	ET1	ET2	LET	LET1	REMARKS REMARQUES
28	6CB–85544–00	.CASE .BOITIER	1	1	1	1	1	
29	68F–82846–00	.SCREW, PAN HEAD (M5) .VIS, TETE TRONCONIQUE (M5)	4	4	4	4	4	
30	6P2–82113–00	.SCREW (M3) .VIS (M3)	13	13	13	13	13	
31	67F–2812A–00	.PULLER, FUSE .TENDEUR, FUSIBLE	1	1	1	1	1	
32	97780–50620	SCREW, TAPPING VIS, TETE BOMBEE	4	4	4	4	4	
33	6P2–81336–00	GROMMET OEILLET CAOUTCHOUC	1	1	1	1	1	
34	97E95–06516	BOLT, HEXAGON W/W DEEP RECESS VIS HEXAGONAL AVC RONDELLE	5	5	5	5	5	
35	6CE–81919–20	GRAPHIC, REGULATOR ADHESIF, REGULATEUR	1	1	1	1	1	
36	6CB–81923–00	WASHER RONDELLE	1	1	1	1	1	AP AP
37	95D95–08016	BOLT, FLANGE DEEP RECESS BOULON FIXATION	1	1	1	1	1	AP AP
38	95D95–08016	BOLT, FLANGE DEEP RECESS BOULON FIXATION	1	1	1	1	1	AP AP
39	6CB–82105–01	BATTERY CABLE CABLE DE BATTERIE	1	1	1	1	1	AP AP

FIG. 22 ELECTRICAL 4 — PARTIE ELECTRIQUE 4

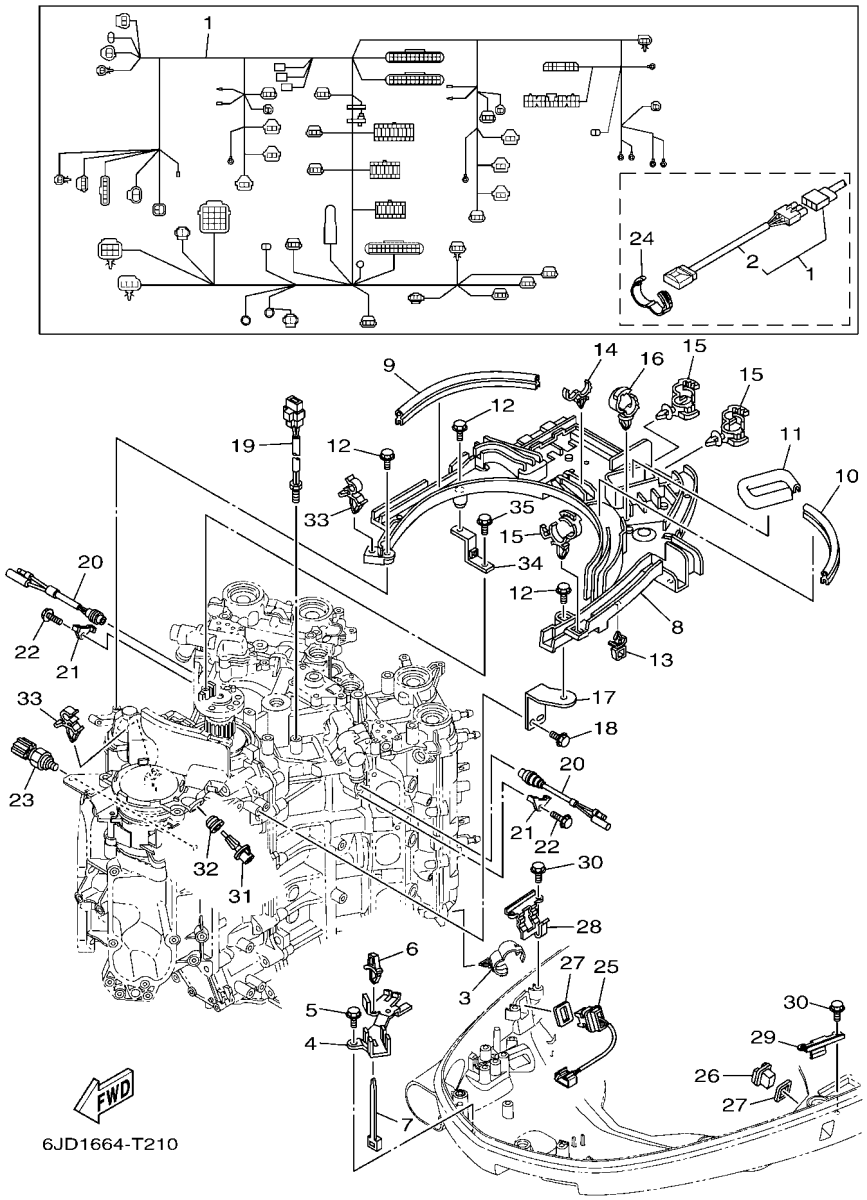

REF. NO.	PART NO. N° PIECES	DESCRIPTION DESCRIPTION	ET	ET1	ET2	LET	LET1	REMARKS REMARQUES
1	6CE–82590–15	WIRE HARNESS ASSY FAISCEAU DE FILS COMPLET	1	1	1	1	1	FOR TILT LIMIT FOR TILT LIMIT
2	6CE–81980–00	.DIODE ASSY .REDRESSEUR 2	1	1	1	1	1	
3	90464–20181	CLAMP BRIDE	4	4	4	4	4	
4	6CB–82594–00	CLAMP BRIDE	1	1	1	1	1	
5	95D95–06012	BOLT, FLANGE DEEP RECESS BOULON FIXATION	2	2	2	2	2	
6	90464–06001	CLAMP BRIDE	1	1	1	1	1	
7	90465–13M24	CLAMP BRIDE	1	1	1	1	1	
8	6CB–82589–01	PROTECTER, WIRE HARNESS PROTECTEUR, FAISCEAU DE FILS	1	1	1	1	1	
9	6BG–42617–00	DAMPER, FORM BOURRELET, CAOUTCHOUC	1	1	1	1	1	
10	6CB–42617–00	DAMPER, FORM BOURRELET, CAOUTCHOUC	1	1	1	1	1	
11	6CB–42629–00	SEAL JOINT	1	1	1	1	1	
12	95D95–06020	BOLT, FLANGE DEEP RECESS BOULON FIXATION	5	5	5	5	5	
13	90464–11121	CLAMP BRIDE	1	1	1	1	1	
14	90464–18246	CLAMP BRIDE	1	1	1	1	1	
15	90464–12183	CLAMP BRIDE	4	4	4	4	4	
16	90464–20181	CLAMP BRIDE	2	2	2	2	2	
17	6CB–82388–00	PLATE PLAQUETTE	1	1	1	1	1	
18	95D95–06016	BOLT, FLANGE DEEP RECESS BOULON FIXATION	2	2	2	2	2	
19	6CB–85790–00	THERMOSENSOR ASSY SENSITOMETRE	1	1	1	1	1	
20	6P2–82560–01	THERMO SWITCH ASSY THERMO-CONTACT COMPLET	2	2	2	2	2	
21	6E9–82588–00	PLATE PLAQUE	2	2	2	2	2	
22	95D95–06012	BOLT, FLANGE DEEP RECESS BOULON FIXATION	2	2	2	2	2	
23	6AW–83651–00	SENDER, OIL PRESSURE RACCORD, PRESSION D'HUILE	1	1	1	1	1	
24	90464–16001	CLAMP BRIDE	1	1	1	1	1	
25	6BR–82563–01	TRIM & TILT SWITCH ASSY INCLINER ET PARER COMMUTATEUR	1	1	1	1	1	
26	69J–42723–01	COVER, BOTTOM COUVERCLE	1	1	1	1	1	
27	69J–82587–00	GASKET JOINT	2	2	2	2	2	

FIG. 22 ELECTRICAL 4 — PARTIE ELECTRIQUE 4

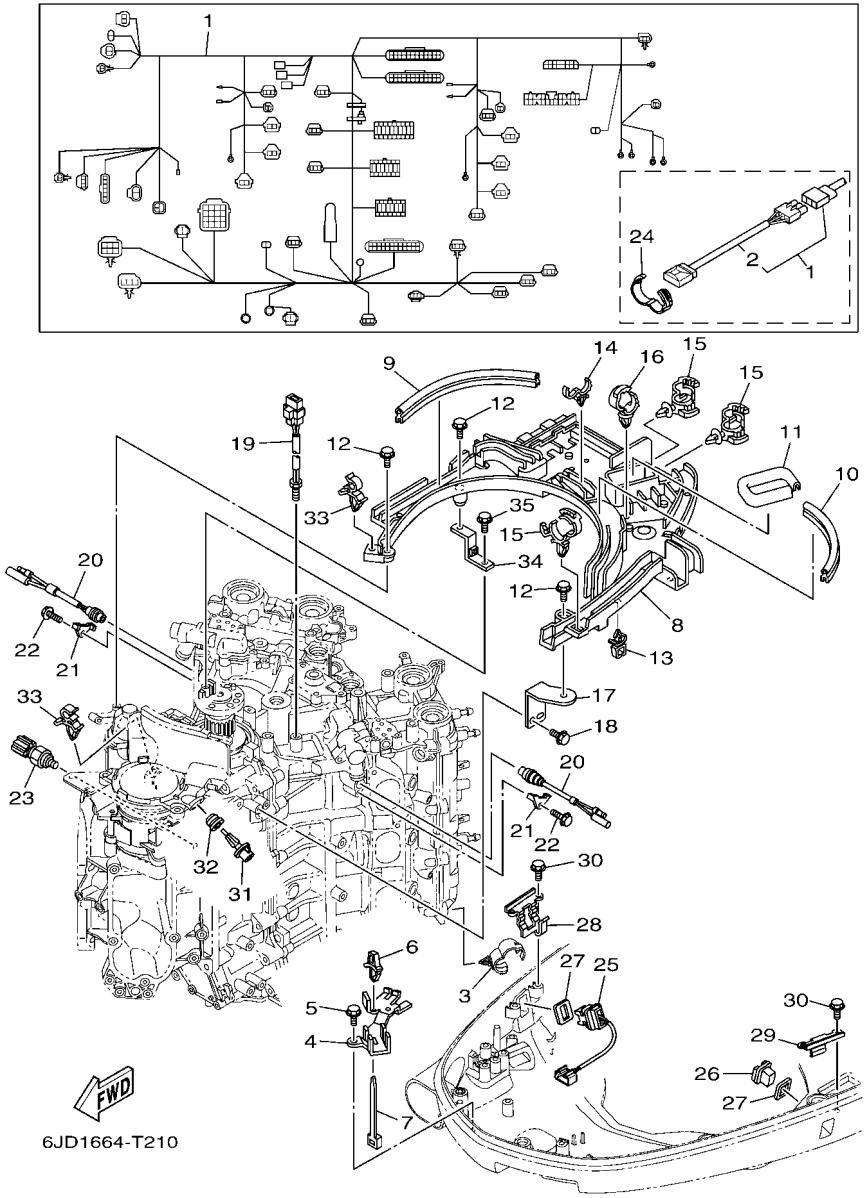

REF. NO.	PART NO. N° PIECES	DESCRIPTION DESCRIPTION	ET	ET1	ET2	LET	LET1	REMARKS REMARQUES
28	63P–83614–01	BRACKET SUPPORT	1	1	1	1	1	
29	6DA–83614–00	BRACKET SUPPORT	1	1	1	1	1	
30	95D95–06012	BOLT, FLANGE DEEP RECESS BOULON FIXATION	4	4	4	4	4	
31	63P–85886–00	SENSOR, AIR TEMPERATURE SONDE	1	1	1	1	1	
32	6CE–14435–00	GROMMET RONDELLE CAOUTCHOUC	1	1	1	1	1	
33	90464–09129	CLAMP BRIDE	2	2	2	2	2	
34	6CB–81952–00	HOLDER, RELAY SUPPORT, RELAIS	1	1	1	1	1	
35	95D95–06016	BOLT, FLANGE DEEP RECESS BOULON FIXATION	1	1	1	1	1	

FIG. 23 ELECTRICAL 5 — PARTIE ELECTRIQUE 5

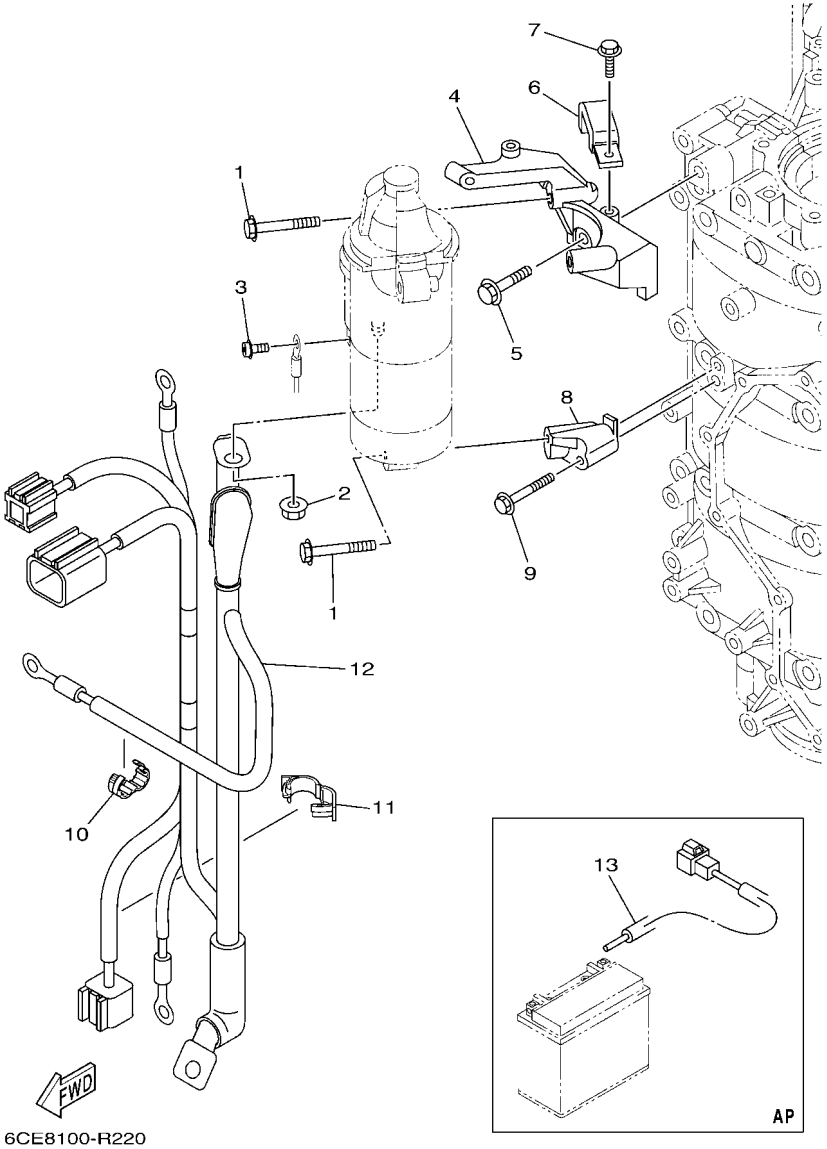

REF. NO.	PART NO. N° PIECES	DESCRIPTION DESCRIPTION	ET	ET1	ET2	LET	LET1	REMARKS REMARQUES
1	97513–08545	BOLT, WITH WASHER VIS HEXAGONAL AVC RONDELLE	3	3	3	3	3	
2	90179–08003	NUT ECROU	1	1	1	1	1	
3	97985–04308	SCREW, WITH WASHER VIS, AVEC RONDELLE	1	1	1	1	1	
4	6CB–81822–02	BRACKET, STARTING MOTOR SUPPORT, DEMARREUR ELECTRIQUE	1	1	1	1	1	
5	90105–08M87	BOLT, FLANGE BOULON, A COLLERETTE	2	2	2	2	2	
6	6CB–81443–00	CLAMP, LEAD 1 BRIDE, FIL 1	1	1	1	1	1	
7	95D95–06016	BOLT, FLANGE DEEP RECESS BOULON FIXATION	1	1	1	1	1	
8	6CB–81823–A0	STAY, STARTING MOTOR SUPPORT	1	1	1	1	1	
9	90105–06151	BOLT, FLANGE BOULON, A COLLERETTE	1	1	1	1	1	
10	90464–13227	CLAMP BRIDE	1	1	1	1	1	
11	90464–18004	CLAMP BRIDE	1	1	1	1	1	
12	6CE–8259M–00	WIRE HARNESS ASSY 2 FAISCEAU DE FILS	1	1	1	1	1	
13	6CE–81949–01	WIRE, LEAD (ISOLATOR CABLE) FIL (ISOLATOR CABLE)	1	1	1	1	1	AP AP

FIG. 24 ELECTRICAL 6 — PARTIE ELECTRIQUE 6

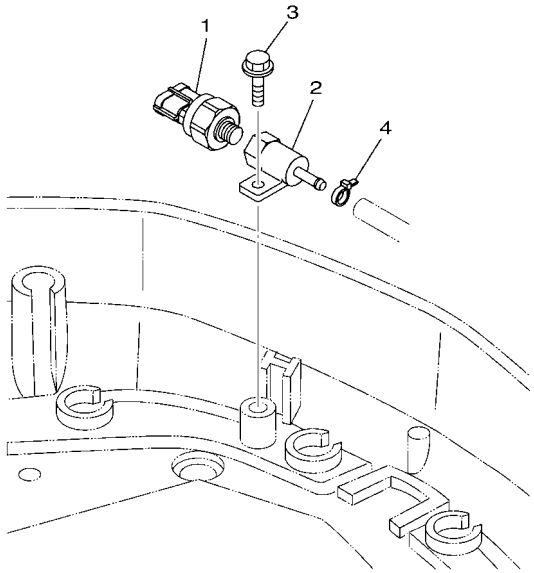

6CE1100-K390

REF. NO.	PART NO. N° PIECES	DESCRIPTION DESCRIPTION	ET	ET1	ET2	LET	LET1	REMARKS REMARQUES
1	6AW–8366B–01	SENSOR, WATER PRESSURE SONDE DE PRESSION D'EAU	1	1	1			FOR LAN SPEED FOR LAN SPEED
2	60V–8366D–00	ADAPTOR, INPUT CONNECTEUR 3	1	1	1			FOR LAN SPEED FOR LAN SPEED
3	95D95–06016	BOLT, FLANGE DEEP RECESS BOULON FIXATION	1	1	1			FOR LAN SPEED FOR LAN SPEED
4	90465–11M10	CLAMP BRIDE	1	1	1			FOR LAN SPEED FOR LAN SPEED

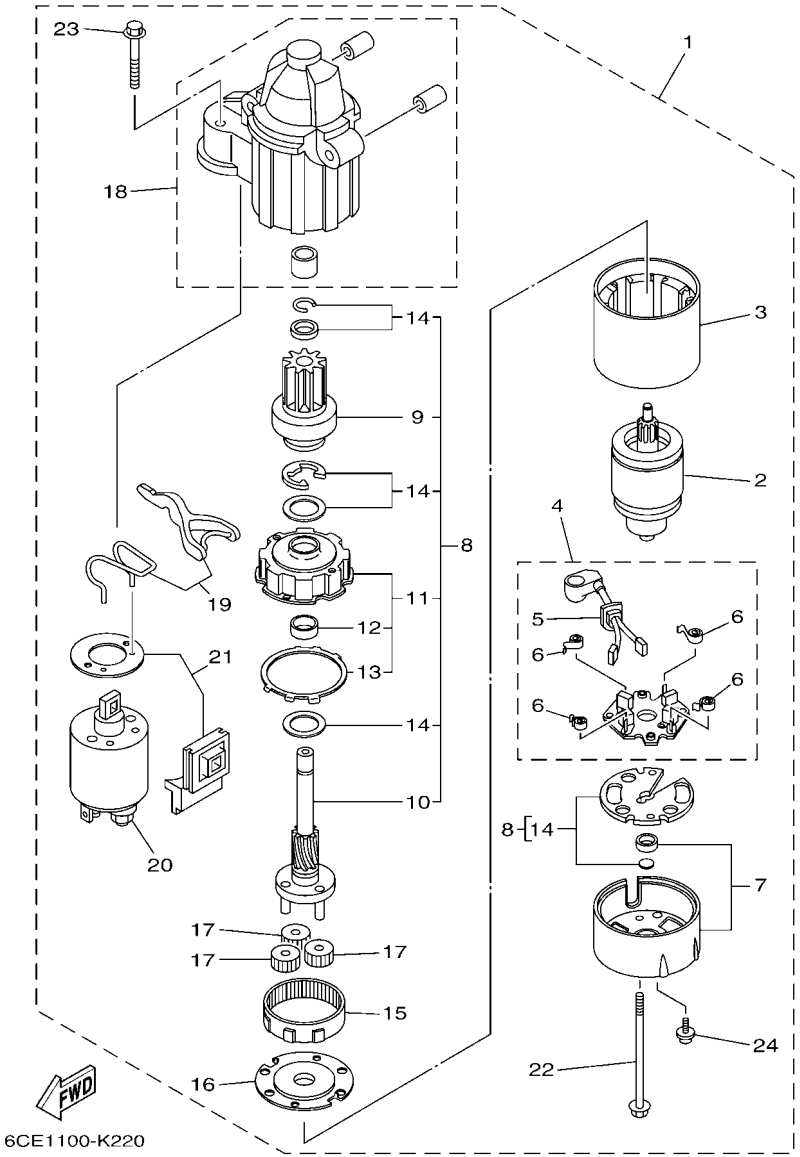

FIG. 25 STARTING MOTOR — DEMARREUR ELECTRIQUE

REF. NO.	PART NO. N° PIECES	DESCRIPTION DESCRIPTION	ET	ET1	ET2	LET	LET1	REMARKS REMARQUES
1	6CE–81800–01	STARTING MOTOR ASSY DEMARREUR ELECTRIQUE COMPLET	1	1	1	1	1	
2	6CE–81850–00	.ARMATURE ASSY .INDUIT	1	1	1	1	1	
3	6CE–81810–00	.STATOR ASSY .STATOR COMPLET	1	1	1	1	1	
4	6CE–81840–01	.BRUSH HOLDER ASSY .SUPPORT DE CHARBON	1	1	1	1	1	
5	6CE–81801–01	..BRUSH SET ..JEU DE BROSSE	1	1	1	1	1	
6	67F–81813–00	..SPRING, BRUSH ..RESSORT, DE CHARBON	4	4	4	4	4	
7	6CE–81820–00	.REAR BRACKET ASSY .SUPPORT ARRIERE COMPLET	1	1	1	1	1	
8	6CE–81807–00	.GEAR ASSY, STARTING MOTOR .PIGNON, DEMARREUR ELECTRIQUE	1	1	1	1	1	
9	6CB–81832–00	..CLUTCH, OVER RUN ..EMBRAYAGE, ROUE LIBRE	1	1	1	1	1	
10	6CB–81836–00	..SHAFT, PINION ..AXE, PIGNON	1	1	1	1	1	
11	6CE–81821–00	..BRACKET, CENTER 1 ..SUPPORT, CENTRE 1	1	1	1	1	1	
12	67F–81841–00	...BEARING ...ROULEMENT	1	1	1	1	1	
13	67F–8183R–00	...GASKET ...JOINT	1	1	1	1	1	
14	6CB–81809–00	..WASHER KIT ..JEU DE RONDELLES	1	1	1	1	1	
15	67F–81891–00	.GEAR, RING .ROUE DENTEE	1	1	1	1	1	WITH 67F-8183R-00 WITH 67F-8183R-00
16	6CE–81830–00	.BRACKET, CENTER 2 .SUPPORT, CENTRE 2	1	1	1	1	1	
17	60V–8183T–00	.GEAR, IDLER .PIGNON, INTERMEDIAIRE	3	3	3	3	3	
18	6CE–81842–00	.COVER .COUVERCLE	1	1	1	1	1	
19	6CE–81839–00	.LEVER ASSY .LEVIER COMPLET	1	1	1	1	1	
20	6C5–81941–00	.STARTER RELAY ASSY .LANCEUR RELAIS (ENS.)	1	1	1	1	1	
21	6CE–81869–00	.COVER, DUST .COUVERCLE, POUSSIERE	1	1	1	1	1	
22	6CB–81826–00	.BOLT .BOULON	2	2	2	2	2	
23	69J–81828–00	.BOLT 2 .BOULON 2	2	2	2	2	2	
24	67F–81846–00	.SCREW .VIS	2	2	2	2	2	

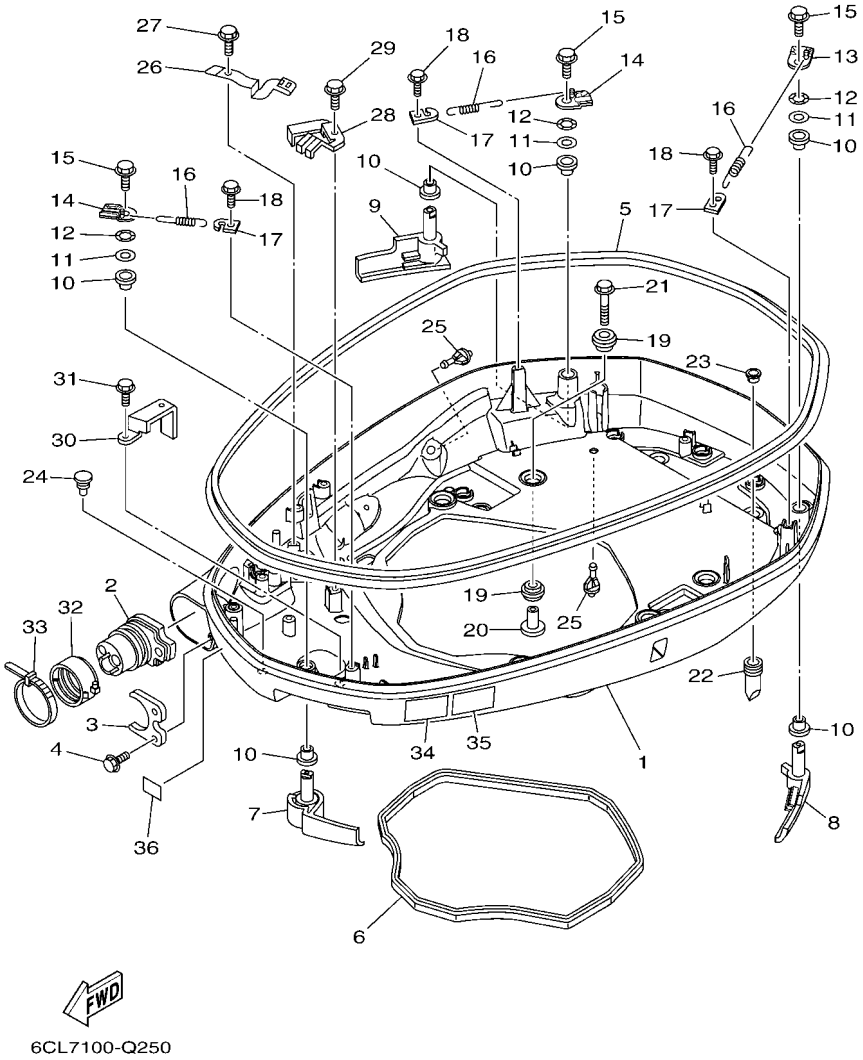

FIG. 26 BOTTOM COWLING 1 — CAPOT INFERIEUR 1

REF. NO.	PART NO. N° PIECES	DESCRIPTION DESCRIPTION	ET	ET1	ET2	LET	LET1	REMARKS REMARQUES
1	6CB–42710–00–8D	BOTTOM COWLING ASSY ENS. EMBASE	1	1		1	1	GRAY GRAY
	6CB–42710–00–CE	BOTTOM COWLING ASSY ENS. EMBASE			1			WHITE WHITE
2	6CE–42725–02	GROMMET PASSE-FIL	1	1	1	1	1	
3	6CB–42761–00	STOPPER PLAQUETTE	1	1	1	1	1	
4	95D95–06014	BOLT, FLANGE DEEP RECESS BOULON FIXATION	2	2	2	2	2	
5	6CB–42615–01	SEAL JOINT	1	1	1	1	1	
6	6CB–42716–00	RUBBER SEAL 1 JOINT EN CAOUTCHOUC 1	1	1	1	1	1	
7	6CB–42815–02–8D	LEVER, CLAMP 1 LEVIER, PRESSE 1	1	1		1	1	GRAY GRAY
	6CB–42815–02–CE	LEVER, CLAMP 1 LEVIER, PRESSE 1			1			WHITE WHITE
8	6CB–42816–02–8D	LEVER, CLAMP 2 LEVIER, PRESSE 2	1	1		1	1	GRAY GRAY
	6CB–42816–02–CE	LEVER, CLAMP 2 LEVIER, PRESSE 2			1			WHITE WHITE
9	6CB–42817–02–8D	LEVER, CLAMP 3 LEVIER, PRESSE 3	1	1		1	1	GRAY GRAY
	6CB–42817–02–CE	LEVER, CLAMP 3 LEVIER, PRESSE 3			1			WHITE WHITE
10	90386–15M73	BUSH DOUILLE	6	6	6	6	6	
11	90201–156J2	WASHER, PLATE RONDELLE, PLATE	3	3	3	3	3	
12	90206–15M18	WASHER, WAVE RONDELLE, ONDULEE	3	3	3	3	3	
13	6CB–42818–00	LEVER, CLAMP 4 LEVIER, PRESSE 4	1	1	1	1	1	
14	6CB–42819–00	LEVER, CLAMP 5 LEVIER, PRESSE 5	2	2	2	2	2	
15	95D95–08012	BOLT, FLANGE DEEP RECESS BOULON FIXATION	3	3	3	3	3	
16	90506–22001	SPRING, TENSION RESSORT, TENSION	3	3	3	3	3	
17	66T–43144–00	HOOK, SPRING CROCHET	3	3	3	3	3	
18	95D95–06012	BOLT, FLANGE DEEP RECESS BOULON FIXATION	3	3	3	3	3	
19	90480–22M81	GROMMET PASSE-FIL	12	12	12	12	12	
20	90387–08M37	COLLAR COLLERETTE	6	6	6	6	6	
21	90119–08187	BOLT, WITH WASHER BOULON, AVEC RONDELLE	6	6	6	6	6	
22	6DA–42717–00	RUBBER, SEAL 2 JOINT EN CAOUTCHOUC 2	2	2	2	2	2	
23	6DA–42384–00	SEAL, CAP JOINT, CAPUCHON	2	2	2	2	2	

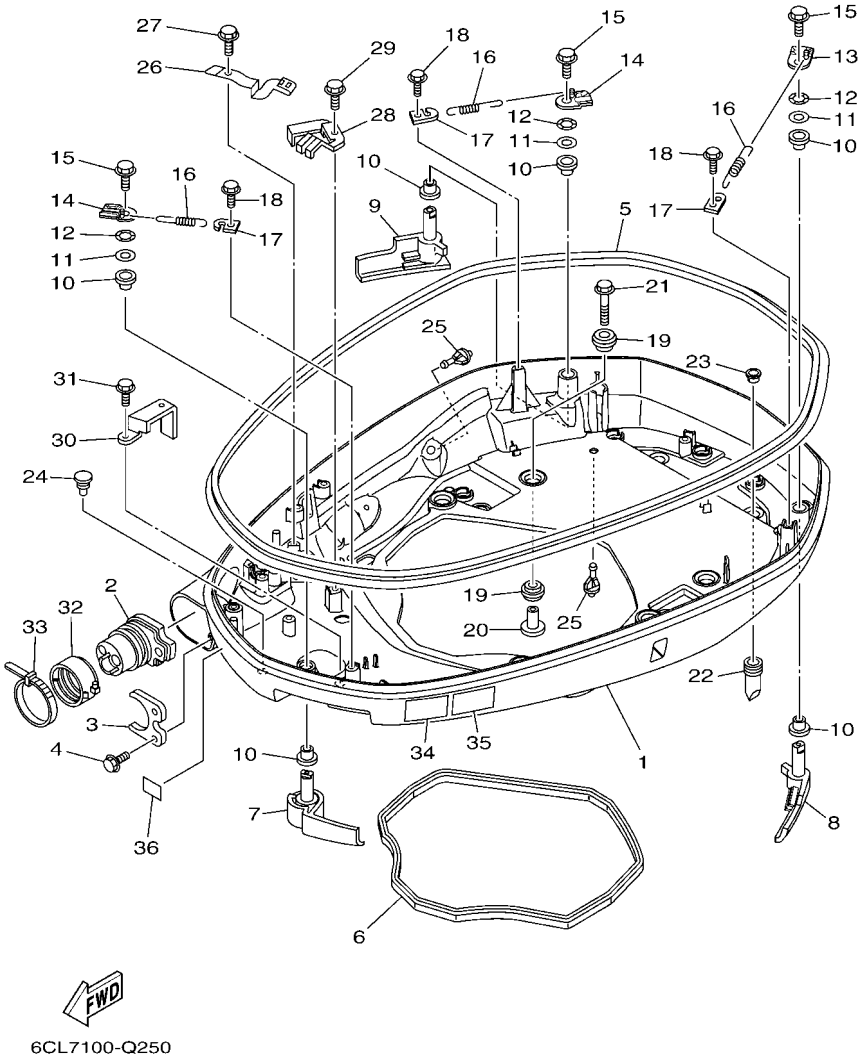

FIG. 26 BOTTOM COWLING 1 — CAPOT INFERIEUR 1

REF. NO.	PART NO. N° PIECES	DESCRIPTION DESCRIPTION	ET	ET1	ET2	LET	LET1	REMARKS REMARQUES
24	6H4–42748–00	GROMMET PASSE-FIL	1	1	1	1	1	
25	6P2–44391–00	NIPPLE, HOSE RACCORD D'ESSENCE	2	2	2	2	2	
26	6CB–42743–00	BRACKET SUPPORT	1	1	1	1	1	
27	95D95–06012	BOLT, FLANGE DEEP RECESS BOULON FIXATION	1	1	1	1	1	
28	6CB–42766–00	BRACKET 2 SUPPORT 2	1	1	1	1	1	
29	95D95–06012	BOLT, FLANGE DEEP RECESS BOULON FIXATION	1	1	1	1	1	
30	6CB–42756–00	STAY, CLAMP SUPPORT, COLLIER	1	1	1	1	1	
31	95D95–06012	BOLT, FLANGE DEEP RECESS BOULON FIXATION	1	1	1	1	1	
32	68F–42753–00	FASTNER ATTACHE	1	1	1	1	1	AP AP
33	90464–20258	CLAMP BRIDE	1	1	1	1	1	AP AP
34	6EE–42794–40	LABEL, WARNING (GENERAL) ETIQUETTE, AVERTISSEMENT	1	1	1	1	1	
35	6EE–42794–50	LABEL, WARNING (GENERAL) ETIQUETTE, AVERTISSEMENT	1	1	1	1	1	
36	6AH–81996–00	MARK MARQUE	1	1	1	1	1	

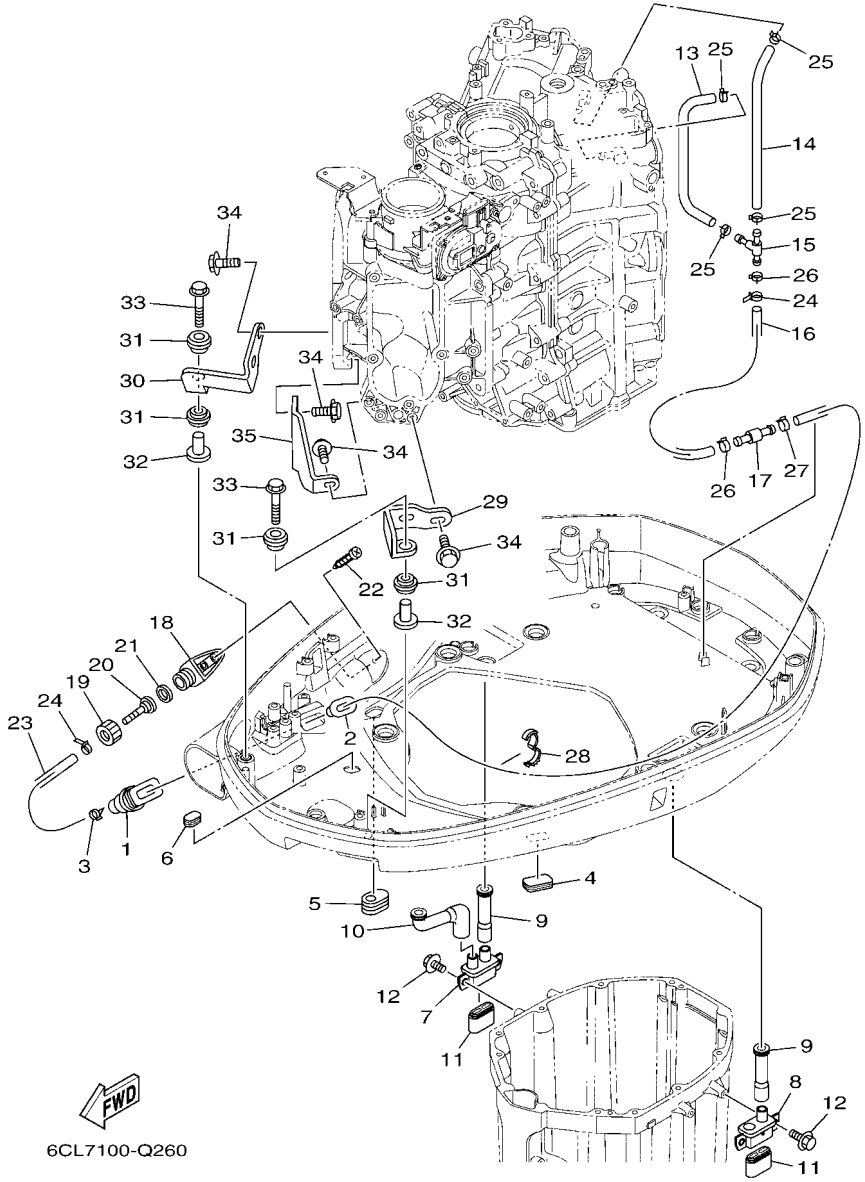

FIG. 27 BOTTOM COWLING 2 — CAPOT INFERIEUR 2

REF. NO.	PART NO. N° PIECES	DESCRIPTION DESCRIPTION	ET	ET1	ET2	LET	LET1	REMARKS REMARQUES
1	6H1–42726–21	GROMMET PASSE-FIL	1	1	1	1	1	
2	6BG–42384–00	SEAL, CAP JOINT, CAPUCHON	1	1	1	1	1	
3	90465–11M10	CLAMP BRIDE	2	2	2	2	2	
4	6H4–42726–00	GROMMET PASSE-FIL	1	1	1	1	1	
5	61A–42727–00	GROMMET PASSE-FIL	1	1	1	1	1	
6	64G–42727–00	GROMMET PASSE-FIL	1	1	1	1	1	
7	6CE–42733–00	BOX, DRAIN BOITIER, VIDANGE	1	1	1	1	1	
8	6CE–42734–00	BOX, DRAIN 2 BOITIER, VIDANGE 2	1	1	1	1	1	
9	6CE–42786–01	HOSE, DRAIN 1 DURITE, VIDANGE 1	2	2	2	2	2	
10	6CE–42787–01	HOSE, DRAIN 2 DURITE, VIDANGE 2	1	1	1	1	1	
11	69J–42717–00	RUBBER, SEAL 2 JOINT EN CAOUTCHOUC 2	2	2	2	2	2	
12	95D95–06016	BOLT, FLANGE DEEP RECESS BOULON FIXATION	4	4	4	4	4	
13	6CB–24315–00	PIPE 5 DURITE 5	1	1	1	1	1	
14	90445–14021	HOSE (L185) DURITE (L185)	1	1	1	1	1	
15	6AW–42169–00	JOINT AXE	1	1	1	1	1	
16	90445–16015	HOSE (L300) DURITE (L300)	1	1	1	1	1	
17	6AW–42785–00	PIPE DURITE	1	1	1	1	1	
18	6AW–12572–00	ADAPTER ADAPTATEUR	1	1	1	1	1	
19	6R3–12581–00	JOINT, HOSE 1 JOINT DE TUYAU	1	1	1	1	1	
20	6AW–12582–00	JOINT, HOSE 2 RACCORD DE TUYAU 1	1	1	1	1	1	
21	6R3–12583–00	GASKET, HOSE JOINT JOINT	1	1	1	1	1	
22	97780–60520	SCREW, TAPPING VIS, TETE BOMBEE	2	2	2	2	2	
23	90445–14019	HOSE (L1460) DURITE (L1460)	1	1	1	1	1	
24	90465–11M10	CLAMP BRIDE	2	2	2	2	2	
25	90467–130A5	CLIP JONC	4	4	4	4	4	
26	90467–140A8	CLIP JONC	2	2	2	2	2	
27	90467–140A9	CLIP JONC	1	1	1	1	1	

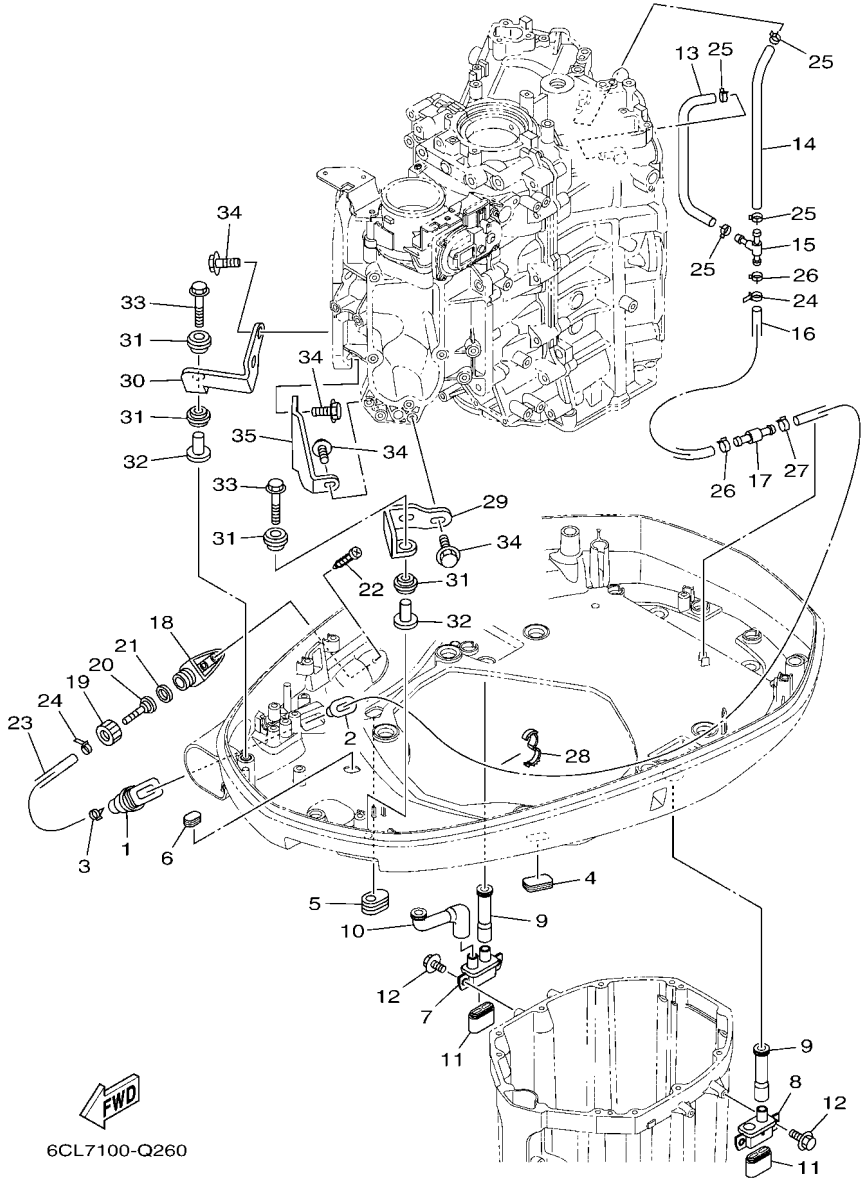

FIG. 27 BOTTOM COWLING 2 — CAPOT INFERIEUR 2

REF. NO.	PART NO. N° PIECES	DESCRIPTION DESCRIPTION	ET	ET1	ET2	LET	LET1	REMARKS REMARQUES
28	90464–16001	CLAMP BRIDE	1	1	1	1	1	
29	6CB–42643–00	PLATE, CLAMP PLAQUE, PRESSE	1	1	1	1	1	
30	6CB–42644–00	PLATE, CLAMP 2 PLAQUE, PRESSE 2	1	1	1	1	1	
31	90480–14029	GROMMET PASSE-FIL	4	4	4	4	4	
32	90387–06M03	COLLAR COLLERETTE	2	2	2	2	2	
33	90119–06291	BOLT, WITH WASHER BOULON, AVEC RONDELLE	2	2	2	2	2	
34	90105–06039	BOLT, FLANGE BOULON, A COLLERETTE	6	6	6	6	6	
35	6CB–42744–00	STAY SUPPORT	1	1	1	1	1	

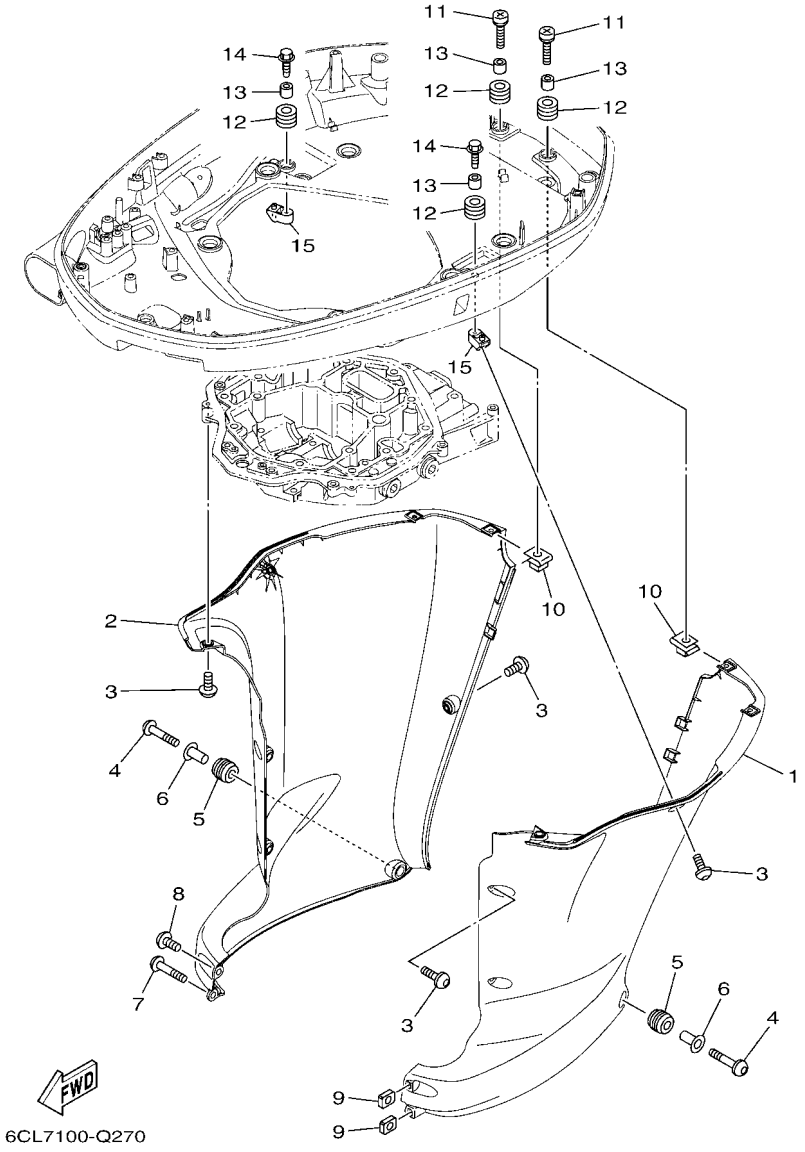

FIG. 28 BOTTOM COWLING 3 — CAPOT INFERIEUR 3

REF. NO.	PART NO. N° PIECES	DESCRIPTION DESCRIPTION	ET	ET1	ET2	LET	LET1	REMARKS REMARQUES
1	6CE–42741–01–8D	APRON CAPOT LATERAL	1	1		1	1	GRAY GRAY
	6CE–42741–01–CE	APRON CAPOT LATERAL			1			WHITE WHITE
2	6CE–42771–01–8D	APRON CAPOT LATERAL	1	1		1	1	GRAY GRAY
	6CE–42771–01–CE	APRON CAPOT LATERAL			1			WHITE WHITE
3	90111–06144	BOLT,HEX. SOCKET BUTTON BOULON	10	10	10	10	10	
4	90111–06142	BOLT,HEX. SOCKET BUTTON BOULON	2	2	2	2	2	
5	90480–16009	GROMMET PASSE-FIL	2	2	2	2	2	
6	90387–07028	COLLAR COLLERETTE	2	2	2	2	2	
7	90111–06142	BOLT,HEX. SOCKET BUTTON BOULON	1	1	1	1	1	
8	90111–06144	BOLT,HEX. SOCKET BUTTON BOULON	1	1	1	1	1	
9	90173–06001	NUT, SQUARE ECROU, CARRE	2	2	2	2	2	
10	90183–061A6	NUT, SPRING ECROU, RESSORT	4	4	4	4	4	
11	90159–06053	SCREW, WITH WASHER VIS, AVEC RONDELLE	4	4	4	4	4	
12	90480–13M24	GROMMET PASSE-FIL	6	6	6	6	6	
13	90387–06M43	COLLAR COLLERETTE	6	6	6	6	6	
14	90109–06M80	BOLT BOULON	2	2	2	2	2	
15	6CE–42774–A0	STAY, APRON 1 COUSSINET	2	2	2	2	2	

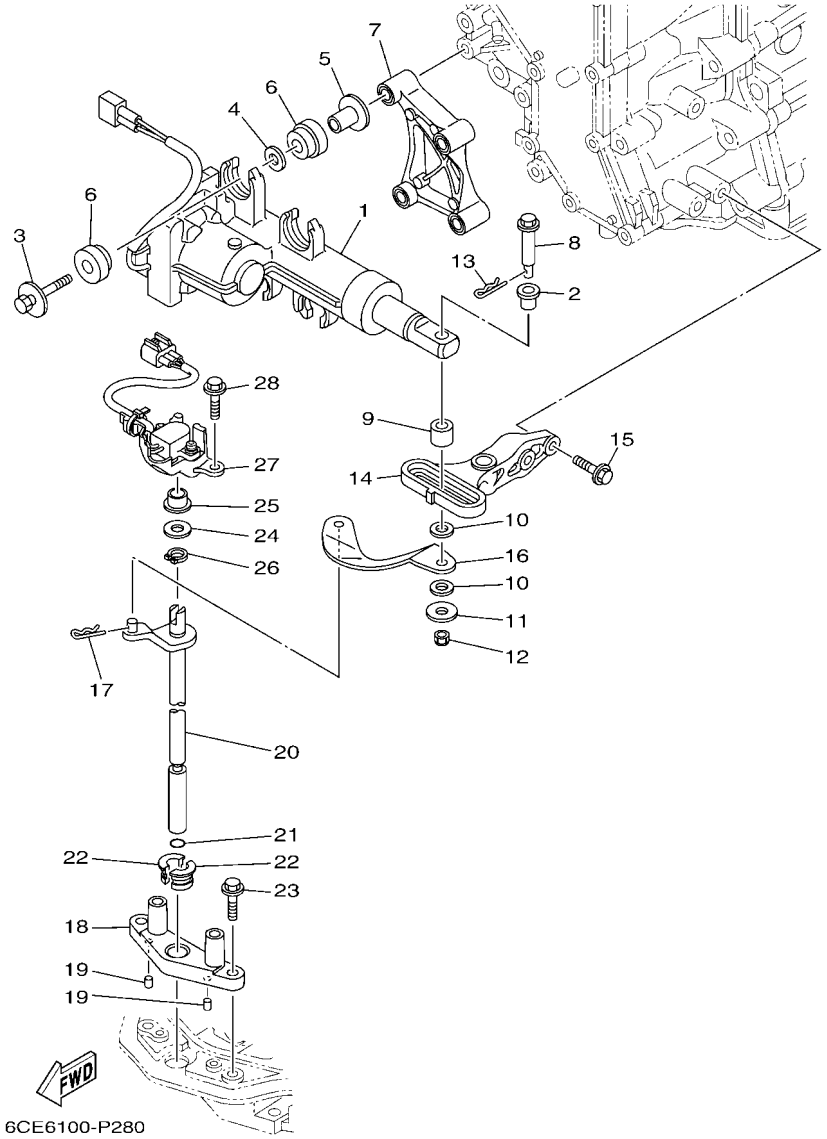

FIG. 29 CONTROL — COMMANDE

REF. NO.	PART NO. N° PIECES	DESCRIPTION DESCRIPTION	ET	ET1	ET2	LET	LET1	REMARKS REMARQUES
1	6ML–4820A–00	ACTUATOR UNIT ACTUATOR UNIT	1	1	1	1	1	
2	90386–08008	BUSH DOUILLE	1	1	1	1	1	
3	90119–08168	BOLT, WITH WASHER BOULON, AVEC RONDELLE	4	4	4	4	4	
4	90201–12064	WASHER, PLATE RONDELLE, PLATE	4	4	4	4	4	
5	90387–08104	COLLAR COLLERETTE	4	4	4	4	4	
6	6CE–85564–00	GROMMET RONDELLE CAOUTCHOUC	8	8	8	8	8	
7	6CE–44142–20	JOINT AXE	1	1	1	1	1	
8	6CE–42195–10	PIN, JOINT 1 GOUPILLE	1	1	1	1	1	
9	6CE–44122–20	BUSHING, SHIFT ROD LEVER DOUILLE, LEVIER D'EMBRAYAGE	1	1	1	1	1	
10	90202–08M41	WASHER, PLATE RONDELLE, PLATE	2	2	2	2	2	
11	90201–06068	WASHER, PLATE RONDELLE, PLATE	1	1	1	1	1	
12	90185–06M07	NUT, SELF-LOCKING ECROU,AUTO-BLOQUANT	1	1	1	1	1	
13	90468–18008	CLIP JONC	1	1	1	1	1	
14	6CE–44117–10	BRACKET SUPPORT	1	1	1	1	1	
15	97E75–06525	BOLT, HEXAGON W/W DEEP RECESS VIS HEXAGONAL AVC RONDELLE	2	2	2	2	2	
16	6CE–44121–10	LEVER, SHIFT ROD LEVIER, TIGE D'INVERSION	1	1	1	1	1	
17	90468–18008	CLIP JONC	1	1	1	1	1	
18	6CE–44118–A0	BRACKET SUPPORT	1	1	1	1	1	
19	93604–07M13	PIN, DOWEL CLAVETTE	2	2	2	2	2	
20	6CE–44120–21	HANDLE GEAR SHIFT ASSY LEVIER D'EMBRAYAGE	1	1	1	1	1	
21	93210–09165	O-RING JOINT TORIQUE	1	1	1	1	1	
22	90386–11001	BUSH DOUILLE	2	2	2	2	2	
23	95D75–06025	BOLT, FLANGE DEEP RECESS BOULON FIXATION	2	2	2	2	2	
24	90201–11008	WASHER, PLATE RONDELLE, PLATE	1	1	1	1	1	
25	90386–10001	BUSH DOUILLE	1	1	1	1	1	
26	93410–10082	CIRCLIP CIRCLIP	1	1	1	1	1	
27	6CE–68303–00	SENSOR ASSY SONDE (ENS.)	1	1	1	1	1	

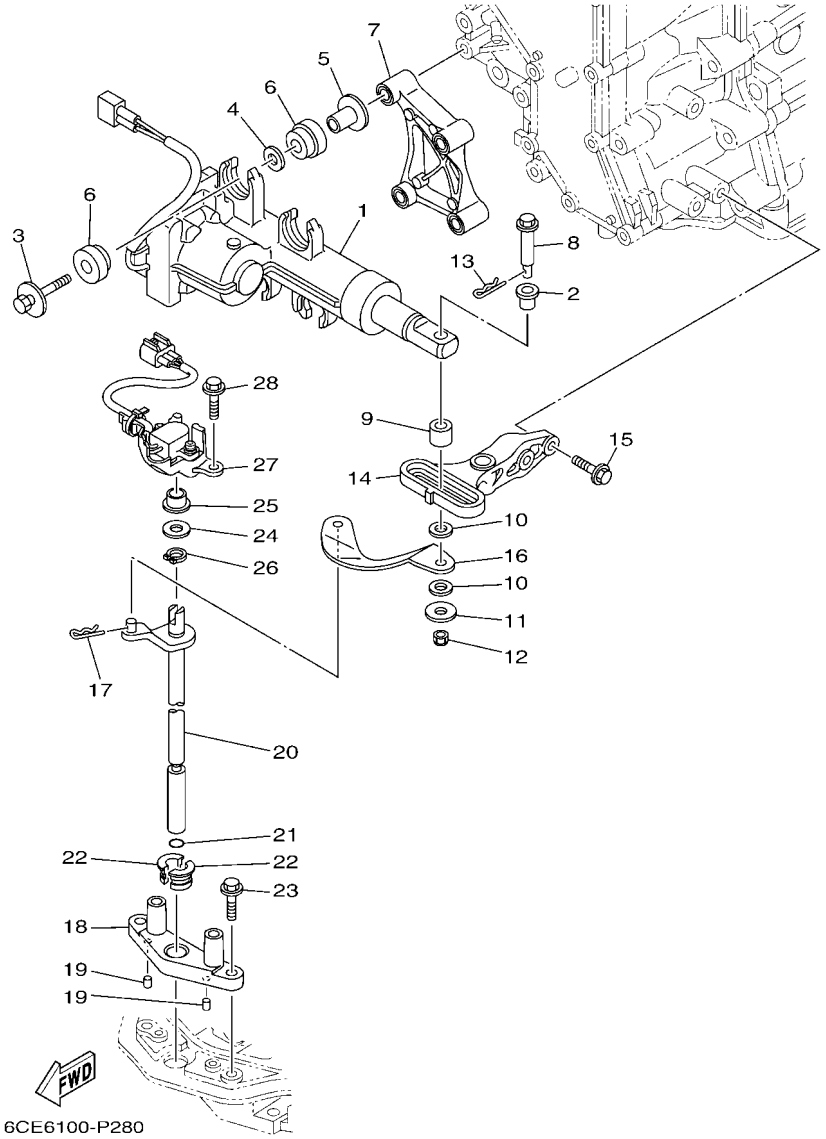

FIG. 29 CONTROL — COMMANDE

REF. NO.	PART NO. N° PIECES	DESCRIPTION DESCRIPTION	ET	ET1	ET2	LET	LET1	REMARKS REMARQUES
28	95D75–06025	BOLT, FLANGE DEEP RECESS BOULON FIXATION	2	2	2	2	2	

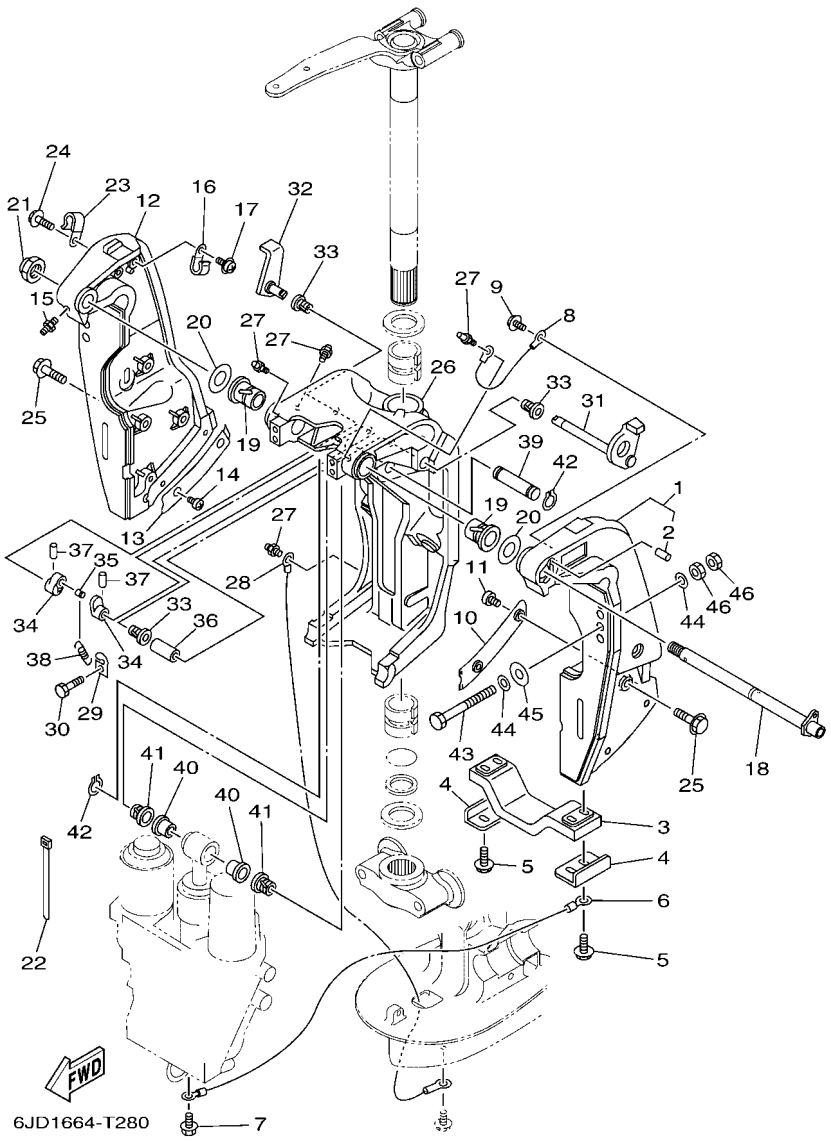

FIG. 30 BRACKET 1 SUPPORT 1

REF. NO.	PART NO. N° PIECES	DESCRIPTION DESCRIPTION	ET	ET1	ET2	LET	LET1	REMARKS REMARQUES
1	69J–43111–11–8D	BRACKET, CLAMP 1 PRESSE 1	1	1		1	1	TILT LIMIT(GRAY) TILT LIMIT(GRAY)
	69J–43111–11–CE	BRACKET, CLAMP 1 PRESSE 1			1			TILT LIMIT(WHITE) TILT LIMIT(WHITE)
2	93606–19002	.PIN, DOWEL .GOUPILLE	1	1	1	1	1	
3	6G5–45251–02	ANODE ANODE	1	1	1	1	1	
4	6G5–44526–00	PLATE PLAQUE	2	2	2	2	2	
5	97E95–06525	BOLT, HEXAGON W/W DEEP RECESS VIS HEXAGONAL AVC RONDELLE	4	4	4	4	4	
6	6H1–82148–00	WIRE, LEAD 4 FIL 4	1	1	1	1	1	
7	97E95–06510	BOLT, HEXAGON W/W DEEP RECESS VIS HEXAGONAL AVC RONDELLE	1	1	1	1	1	
8	6E5–82148–00	WIRE, LEAD 4 FIL 4	1	1	1	1	1	
9	97985–06212	SCREW, WITH WASHER VIS, AVEC RONDELLE	1	1	1	1	1	
10	61A–43132–00	WASHER, FRICTION RONDELLE, FRICTION	1	1	1	1	1	
11	97885–06010	SCREW, PAN HEAD VIS, A ENCOCHE	2	2	2	2	2	
12	69J–43112–02–8D	BRACKET, CLAMP 2 PRESSE 2	1	1		1	1	GRAY GRAY
	69J–43112–02–CE	BRACKET, CLAMP 2 PRESSE 2			1			WHITE WHITE
13	61A–43133–00	WASHER,FRICTION RONDELLE	1	1	1	1	1	
14	97885–06010	SCREW, PAN HEAD VIS, A ENCOCHE	2	2	2	2	2	
15	93700–06002	NIPPLE, GREASE PION	1	1	1	1	1	
16	90465–08M83	CLAMP BRIDE	1	1	1	1	1	
17	97985–06212	SCREW, WITH WASHER VIS, AVEC RONDELLE	1	1	1	1	1	
18	6R3–43131–30	BOLT, CLAMP BRACKET BOULON, PRESSE	1	1	1	1	1	FOR TILT LIMIT FOR TILT LIMIT
19	90386–25M31	BUSH DOUILLE	2	2	2	2	2	
20	90201–26M59	WASHER, PLATE RONDELLE, PLATE	2	2	2	2	2	
21	90185–22M11	NUT, SELF-LOCKING ECROU,AUTO-BLOQUANT	1	1	1	1	1	
22	90465–11M10	CLAMP BRIDE	4	4	4	4	4	
23	90465–08M83	CLAMP BRIDE	1	1	1	1	1	
24	97E95–06514	BOLT, HEXAGON W/W DEEP RECESS VIS HEXAGONAL AVC RONDELLE	1	1	1	1	1	
25	90119–10024	BOLT, WITH WASHER BOULON, AVEC RONDELLE	8	8	8	8	8	

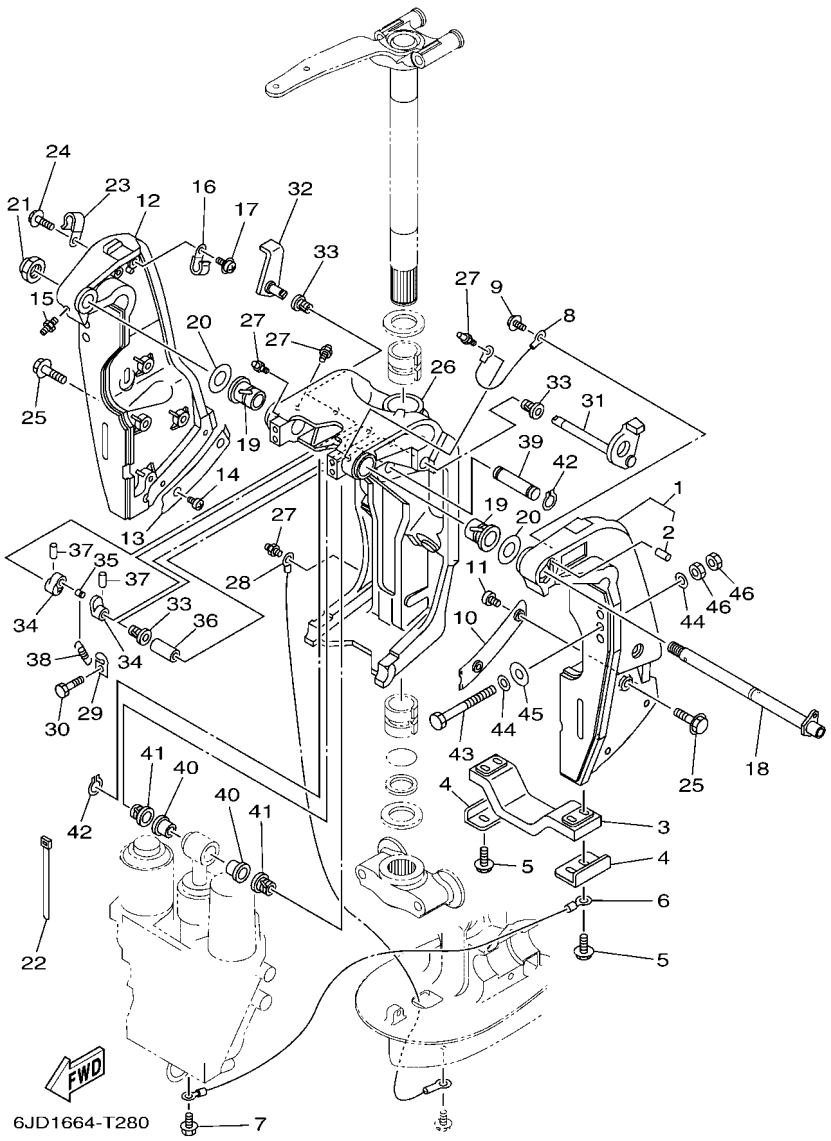

FIG. 30 BRACKET 1 — SUPPORT 1

REF. NO.	PART NO. N° PIECES	DESCRIPTION DESCRIPTION	ET	ET1	ET2	LET	LET1	REMARKS REMARQUES
26	61A–43311–22–8D	BRACKET, SWIVEL 1 SUPPORT, PIVOT 1	1	1		1	1	GRAY GRAY
	61A–43311–22–CE	BRACKET, SWIVEL 1 SUPPORT, PIVOT 1			1			WHITE WHITE
27	93700–06002	NIPPLE, GREASE PION	5	5	5	5	5	
28	69J–82147–00	WIRE, LEAD 5 FIL 5	1	1	1	1	1	
29	6G5–43144–00	HOOK, SPRING CROCHET	1	1	1	1	1	
30	97D95–06010	BOLT, HEXAGON DEEP RECESS VIS HEXAGONAL	1	1	1	1	1	
31	61A–43181–01	LEVER, TILT STOP 1 LEVIER VERROUILLAGE RELEVAGE 1	1	1	1	1	1	
32	6G5–43185–02	LEVER, TILT STOP 2 LEVIER VERROUILLAGE RELEVAGE 2	1	1	1	1	1	
33	90386–10M16	BUSH DOUILLE	3	3	3	3	3	
34	6G5–43148–00	COLLAR, DISTANCE ENTRETOISE	2	2	2	2	2	
35	90249–06M19	PIN GOUPILLE	1	1	1	1	1	
36	90387–10M05	COLLAR COLLERETTE	1	1	1	1	1	
37	91690–30020	PIN, SPRING AGRAFFE	2	2	2	2	2	
38	90506–16003	SPRING, TENSION RESSORT, TENSION	1	1	1	1	1	
39	6E5–43126–10	PIN, UPPER SHOCK MOUNT AXE, SUPERIEUR AMORTISSEUR	1	1	1	1	1	
40	90386–18M63	BUSH DOUILLE	2	2	2	2	2	
41	90386–18M14	BUSH DOUILLE	2	2	2	2	2	
42	93410–18M05	CIRCLIP CIRCLIP	2	2	2	2	2	
43	90101–12065	BOLT (L:130MM) BOULON (L:130MM)	2	2	2	2	2	UR UR
	90101–12066	BOLT (L:150MM) BOULON (L:150MM)	2	2	2	2	2	UR UR
44	90201–13M01	WASHER, PLATE RONDELLE, PLATE	8	8	8	8	8	
45	90201–12426	WASHER, PLATE RONDELLE, PLATE	4	4	4	4	4	
46	95380–12600	NUT ECROU	8	8	8	8	8	

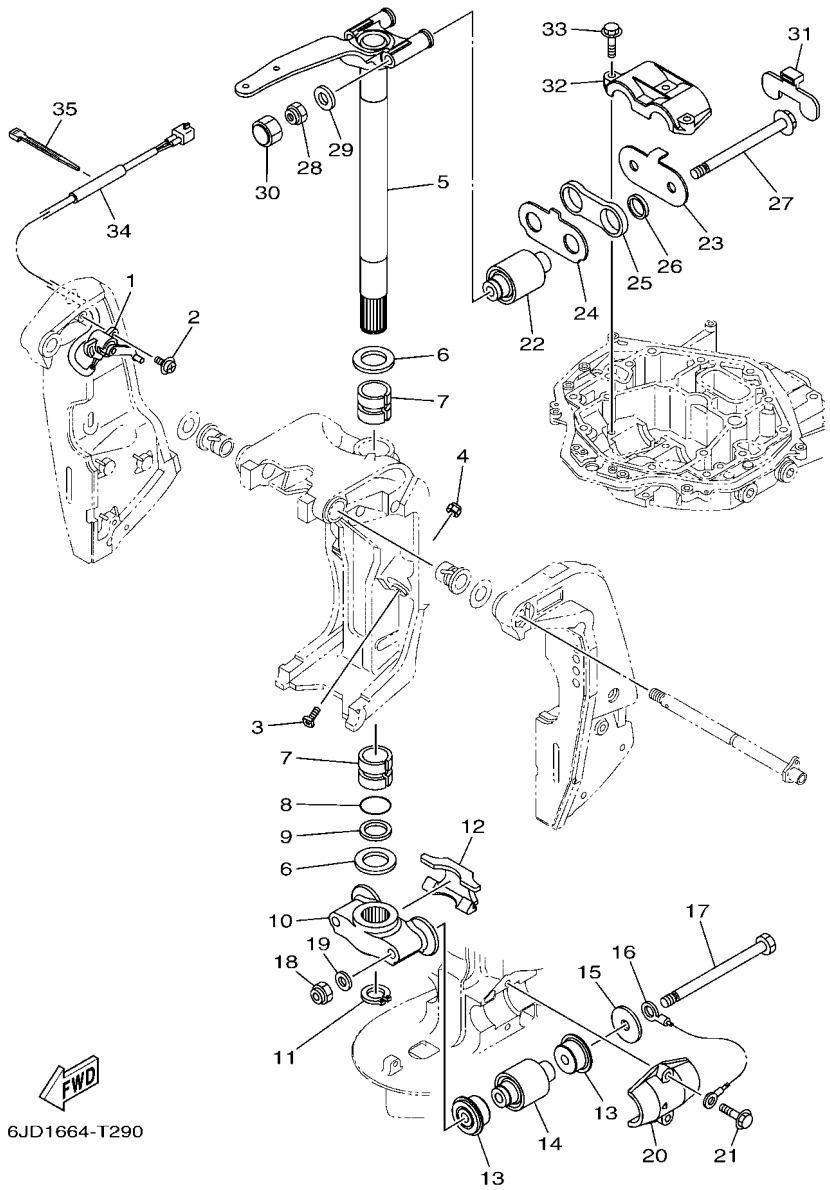

FIG. 31 BRACKET 2 — SUPPORT 2

REF. NO.	PART NO. N° PIECES	DESCRIPTION DESCRIPTION	ET	ET1	ET2	LET	LET1	REMARKS REMARQUES
1	69J–83672–11	TRIM SENDER INCLINER RACCORD	1	1	1	1	1	
2	97985–06216	SCREW, WITH WASHER VIS, AVEC RONDELLE	2	2	2	2	2	
3	6AW–43376–00	BOLT, THRUST RECEIVER BOULON	2	2	2	2	2	
4	95780–10300	NUT, FLANGE ECROU	2	2	2	2	2	
5	6CE–42510–00–8D	STEERING BRACKET ASSY DIRECTION SUPPORT (ENS.)	1	1		1	1	GRAY GRAY
	6CE–42510–00–CE	STEERING BRACKET ASSY DIRECTION SUPPORT (ENS.)			1			WHITE WHITE
6	90201–40M00	WASHER, PLATE RONDELLE, PLATE	2	2	2	2	2	
7	90386–39M89	BUSH DOUILLE	2	2	2	2	2	
8	93210–35321	O-RING JOINT TORIQUE	1	1	1	1	1	
9	90202–40M47	WASHER, PLATE RONDELLE, PLATE	1	1	1	1	1	
10	6CE–44551–00–CA	HOUSING, LOWER MOUNT RUBBER 1 BOITIER, SILENT-BLOC INFERIEUR	1	1	1	1	1	
11	93410–37M04	CIRCLIP CIRCLIP	1	1	1	1	1	
12	6CE–44574–00	STOPPER, LOWER MOUNT RUBBER BUTEE	1	1	1	1	1	
13	6CE–44575–00	DAMPER, LOWER MOUNT RUBBER SILENT-BLOC, INFERIEUR	4	4	4	4	4	
14	6CE–44555–00	MOUNT DAMPER, LOWER SIDE SILENT-BLOC, INFERIEUR LATERAL	2	2	2	2	2	
15	90201–16032	WASHER, PLATE RONDELLE, PLATE	2	2	2	2	2	
16	6AW–82149–00	WIRE, LEAD 3 FIL 3	1	1	1	1	1	
17	90101–14004	BOLT BOULON	2	2	2	2	2	
18	90185–14M00	NUT, SELF-LOCKING ECROU,AUTO-BLOQUANT	2	2	2	2	2	
19	92995–14600	WASHER RONDELLE	2	2	2	2	2	
20	6CE–44552–00–CA	HOUSING, LOWER MOUNT RUBBER 2 BOITIER, SILENT-BLOC INFERIEUR	2	2	2	2	2	
21	90119–10024	BOLT, WITH WASHER BOULON, AVEC RONDELLE	4	4	4	4	4	
22	6CE–44514–00	MOUNT DAMPER, UPPER SIDE SILENT-BLOC, SUPERIEUR LATERAL	2	2	2	2	2	
23	6CE–44526–00	PLATE PLAQUE	1	1	1	1	1	
24	6CE–44536–00	PLATE 2 PLAQUETTE 2	1	1	1	1	1	
25	6CE–44532–00	STOPPER, UPPER MOUNT PLAQUETTE	1	1	1	1	1	
26	90387–28013	COLLAR COLLERETTE	2	2	2	2	2	

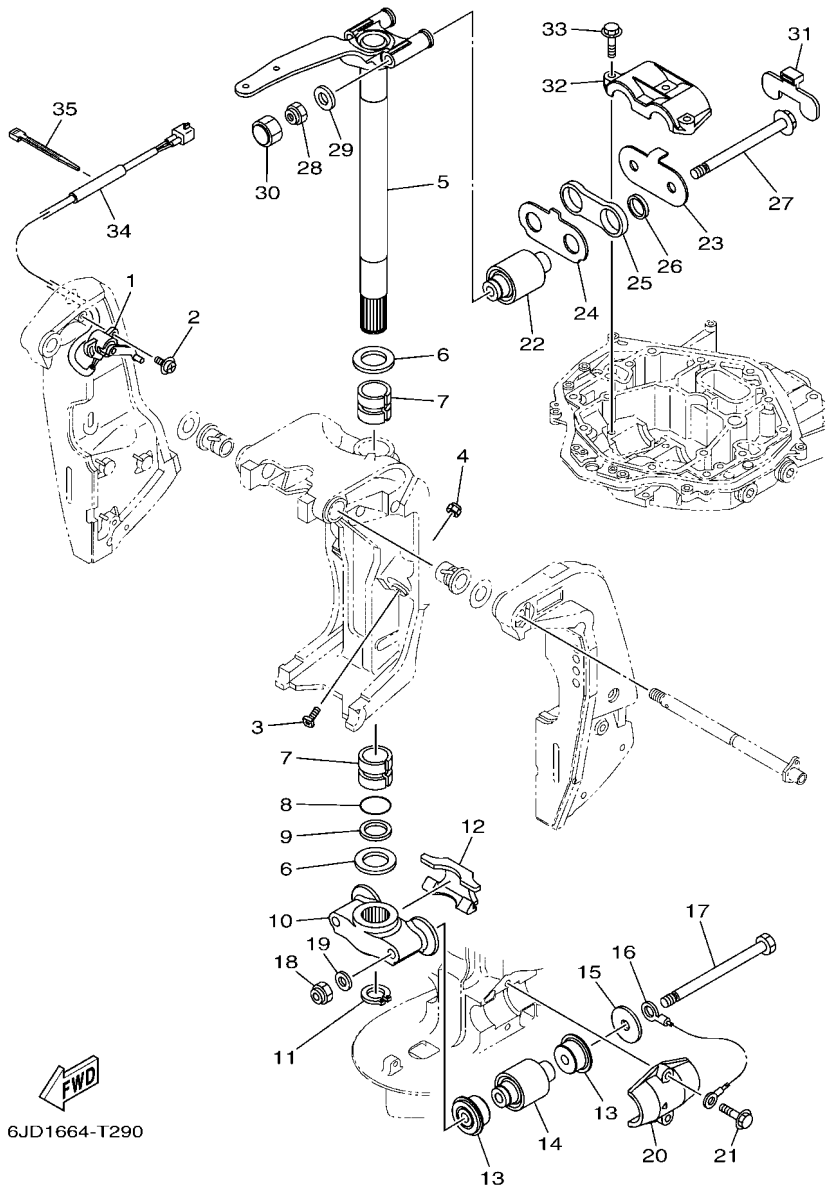

FIG. 31 BRACKET 2 — SUPPORT 2

REF. NO.	PART NO. N° PIECES	DESCRIPTION DESCRIPTION	ET	ET1	ET2	LET	LET1	REMARKS REMARQUES
27	90105–14005	BOLT, FLANGE BOULON, A COLLERETTE	2	2	2	2	2	
28	90185–14M00	NUT, SELF-LOCKING ECROU,AUTO-BLOQUANT	2	2	2	2	2	
29	92995–14600	WASHER RONDELLE	2	2	2	2	2	
30	6CE–44194–00	CAP CAPUCHON	2	2	2	2	2	
31	6CE–44533–00	DAMPER, UPPER MOUNT RUBBER COUVERCLE, SUSPENSION INFERIEU	1	1	1	1	1	
32	6CE–44511–00	COVER, UPPER MOUNT COUVERCLE, SUSPENSION SUPERIEU	1	1	1	1	1	
33	90119–10024	BOLT, WITH WASHER BOULON, AVEC RONDELLE	3	3	3	3	3	
34	90446–15003	HOSE (L100) DURITE (L100)	1	1	1	1	1	
35	90465–11M10	CLAMP BRIDE	1	1	1	1	1	

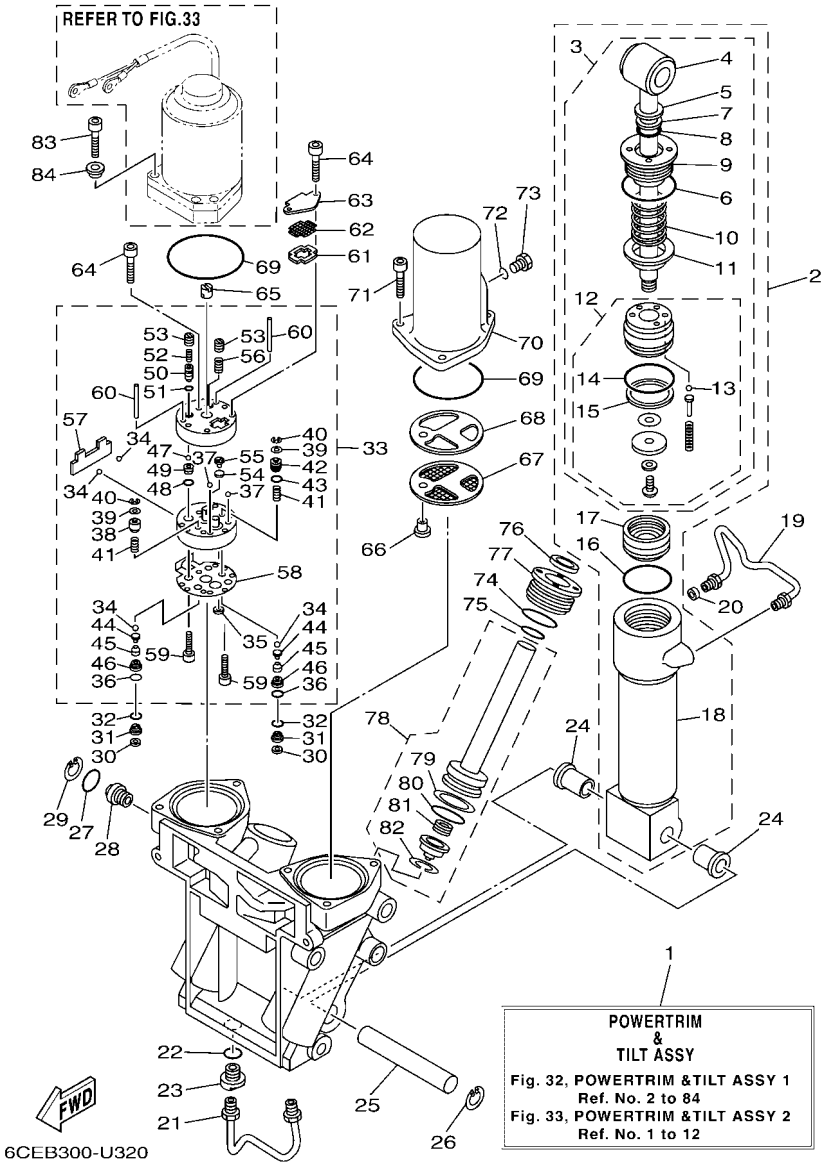

FIG. 32 POWER TRIM & TILT ASSY 1 — PUISSANCE PARER ET INCLINER 1

REF. NO.	PART NO. N° PIECES	DESCRIPTION DESCRIPTION	ET	ET1	ET2	LET	LET1	REMARKS REMARQUES
1	69J–43800–11–8D	POWER TRIM & TILT ASSY PUISSANCE PARER ET INCLINER (E	1	1		1	1	GRAY GRAY
	69J–43800–11–CE	POWER TRIM & TILT ASSY PUISSANCE PARER ET INCLINER (E			1			WHITE WHITE
2	6CE–43840–01	POWER TILT ASSY PUISSANCE INCLINER (ENS.)	1	1	1	1	1	
3	6CE–43810–01	.TILT PISTON SUB ASSY .INCLINER PISTON AUXILIAIRE(ENS	1	1	1	1	1	
4	69J–43801–01	..ROD ..TIGE	1	1	1	1	1	
5	93106–19001	..OIL SEAL ..JOINT SPY	1	1	1	1	1	
6	63P–43861–20	..O-RING ..JOINT TORIQUE	1	1	1	1	1	
7	6H1–43872–00	..RING, BACK UP ..RESSORT	1	1	1	1	1	
8	61A–4389H–01	..O-RING ..JOINT TORIQUE	1	1	1	1	1	
9	61A–43811–00	..SCREW, CYLINDER END ..VIS, CYLINDRE RACCORD	1	1	1	1	1	
10	69J–4384H–00	..SPRING ..RESSORT	1	1	1	1	1	
11	69J–4382E–00	..ADAPTOR 2 ..ADAPTEUR 2	1	1	1	1	1	
12	6CE–4380P–00	..PISTON SUB ASSY ..PISTON AUXILIAIRE (ENS.)	1	1	1	1	1	
13	93505–32038	...BALL ...BILLE	5	5	5	5	5	
14	61A–43861–00	...O-RING ...JOINT TORIQUE	1	1	1	1	1	
15	61A–43871–00	...RING, BACK UP ...SEGMENT	1	1	1	1	1	
16	61A–43861–00	.O-RING .JOINT TORIQUE	1	1	1	1	1	
17	6H1–43814–11	.PISTON, FREE .PISTON	1	1	1	1	1	
18	61A–43813–02	.CYLINDER, TILT .CYLINDRE	1	1	1	1	1	
19	69J–43835–10	PIPE TUYAU	1	1	1	1	1	
20	69J–4388J–00	PLUG 2 BOUCHON 2	1	1	1	1	1	
21	69J–43833–02	PIPE TUYAU	1	1	1	1	1	
22	93210–17239	O-RING JOINT TORIQUE	1	1	1	1	1	
23	69J–4388E–01	BOLT ,SCREW VIS	1	1	1	1	1	
24	90386–18M14	BUSH DOUILLE	2	2	2	2	2	
25	61A–43818–00	PIN, LOWER SHOCK MOUNT AXE, INFERIEUR AMORTISSEUR	1	1	1	1	1	
26	61A–43876–01	RING, SNAP RESSORT	1	1	1	1	1	

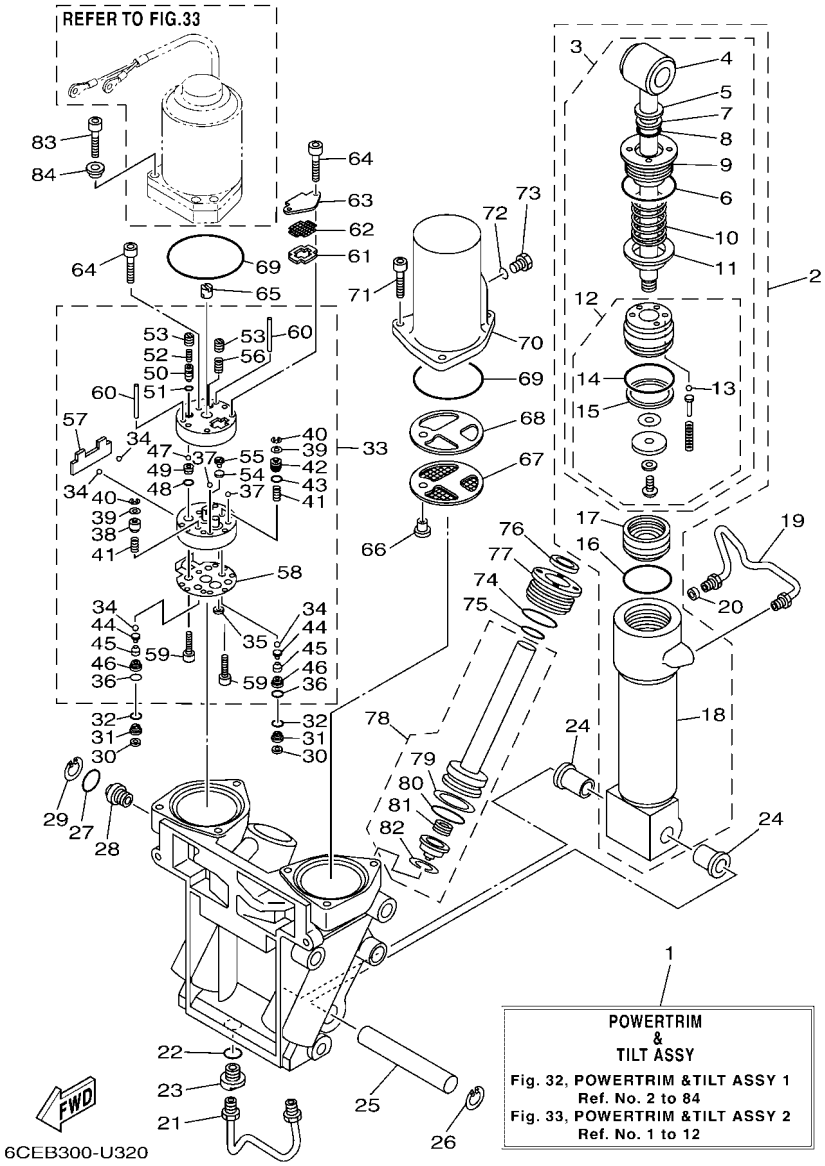

FIG. 32 POWER TRIM & TILT ASSY 1 — PUISSANCE PARER ET INCLINER 1

REF. NO.	PART NO. N° PIECES	DESCRIPTION DESCRIPTION	ET	ET1	ET2	LET	LET1	REMARKS REMARQUES
27	6D8–43863–00	O-RING JOINT TORIQUE	1	1	1	1	1	
28	69J–43845–00	SCREW, MANUAL RELEASE VIS	1	1	1	1	1	
29	6H1–43875–00	RING, SNAP RESSORT	1	1	1	1	1	
30	69J–4381C–00	FILTER 3 FILTRE 3	2	2	2	2	2	
31	69J–43899–01	PLATE STOPPER PLAQUETTE	2	2	2	2	2	
32	69J–4389J–00	O-RING JOINT TORIQUE	2	2	2	2	2	
33	69J–43830–01	GEAR PUMP ASSY POMPE A PIGNON (ENS.)	1	1	1	1	1	
34	93505–32038	.BALL .BILLE	4	4	4	4	4	
35	69J–4381C–00	.FILTER 3 .FILTRE 3	1	1	1	1	1	
36	69J–4389J–00	.O-RING .JOINT TORIQUE	2	2	2	2	2	
37	93503–16003	.BALL .BILLES	2	2	2	2	2	
38	6CJ–4384M–00	.PISTON, SHUTTLE 2 .PISTON 2	1	1	1	1	1	
39	69A–4384F–00	.SEAL, MAIN VALVE .JOINT	2	2	2	2	2	
40	99002–03600	.CIRCLIP .CIRCLIP	2	2	2	2	2	
41	69J–43894–00	.SPRING, SHUTTLE RETURN .RESSORT	2	2	2	2	2	
42	6CJ–43841–00	.PISTON, SHUTTLE .PISTON	1	1	1	1	1	
43	6H1–43883–00	.O-RING .JOINT TORIQUE	1	1	1	1	1	
44	60V–4386A–00	.PIN, ABSORBER VALVE .GOUPILLE, SOUPAPE	2	2	2	2	2	
45	69J–43853–00	.SPRING, MAIN VALVE .RESSORT	2	2	2	2	2	
46	6CJ–43893–00	.WASHER .RONDELLE	2	2	2	2	2	
47	93501–08001	.BALL .BILLE	2	2	2	2	2	
48	93210–08391	.O-RING .JOINT TORIQUE	1	1	1	1	1	
49	69J–43851–00	.SEAT, RELIEF VALVE .SIEGE	1	1	1	1	1	
50	63P–43844–20	.PIN, VALVE SUPPORT .GOUPILLE	1	1	1	1	1	
51	93210–064A5	.O-RING .JOINT TORIQUE	1	1	1	1	1	
52	69J–43855–00	.SPRING, UP RELIEF .RESSORT	1	1	1	1	1	
53	6CJ–43843–00	.SCREW, VALVE LOCK .VIS	2	2	2	2	2	

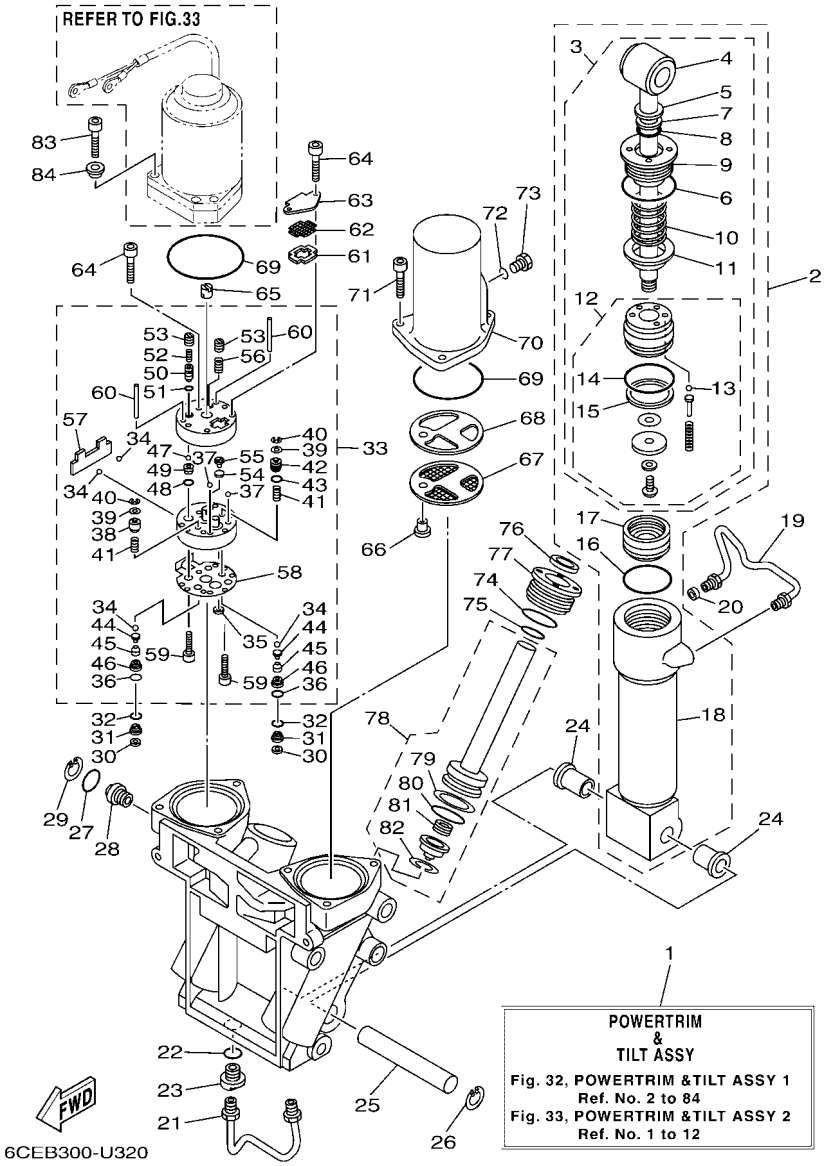

FIG. 32 POWER TRIM & TILT ASSY 1 — PUISSANCE PARER ET INCLINER 1

REF. NO.	PART NO. N° PIECES	DESCRIPTION DESCRIPTION	ET	ET1	ET2	LET	LET1	REMARKS REMARQUES
54	6H1–4384G–11	.SEAL, RELIEF VALVE .JOINT	1	1	1	1	1	
55	6H1–43844–10	.PIN, VALVE SUPPORT .GOUPILLE	1	1	1	1	1	
56	6H1–43856–10	.SPRING, DOWN RELIEF .RESSORT	1	1	1	1	1	
57	69J–43854–00	.SPRING, MANUAL RELEASE .RESSORT	1	1	1	1	1	
58	69J–4384G–00	.SEAL, RELIEF VALVE .JOINT	1	1	1	1	1	
59	91318–05025	.BOLT .BOULON	2	2	2	2	2	
60	93604–35236	.PIN, DOWEL .CLAVETTE	2	2	2	2	2	
61	69J–43871–00	RING, BACK UP SEGMENT	1	1	1	1	1	
62	69J–43816–00	FILTER 1 FILTRE 1	1	1	1	1	1	
63	69J–4381J–00	PLATE PLAQUE	1	1	1	1	1	
64	91318–05040	BOLT BOULON	3	3	3	3	3	
65	69J–43831–00	CONNECTOR, SHAFT RACCORD	1	1	1	1	1	
66	69J–4388H–00	PLUG BOUCHON	1	1	1	1	1	
67	69J–43817–00	FILTER 2 FILTRE 2	1	1	1	1	1	
68	69J–4388F–00	SPACER ENTRETOISE	1	1	1	1	1	
69	93210–66001	O-RING JOINT TORIQUE	2	2	2	2	2	
70	69J–43828–00	BODY, RESERVOIR CORPS	1	1	1	1	1	
71	69J–43888–00	BOLT, SOCKET BOULON	3	3	3	3	3	
72	93210–09165	O-RING JOINT TORIQUE	1	1	1	1	1	
73	6H1–43829–00	PLUG, RESERVOIR BOUCHON	1	1	1	1	1	
74	61A–43861–00	O-RING JOINT TORIQUE	2	2	2	2	2	
75	6D8–43863–00	O-RING JOINT TORIQUE	2	2	2	2	2	
76	63P–43812–20	SEAL, DUST JOINT	2	2	2	2	2	
77	61A–43821–02	SCREW, TRIM CYLINDER END VIS	2	2	2	2	2	
78	69J–43820–01	TRIM PISTON SUB ASSY PARER PISTON AUXILIAIRE (ENS.)	2	2	2	2	2	
79	61A–43874–00	.RING, BACK UP .RESSORT	1	1	1	1	1	
80	61A–43864–00	.O-RING .JOINT TORIQUE	1	1	1	1	1	

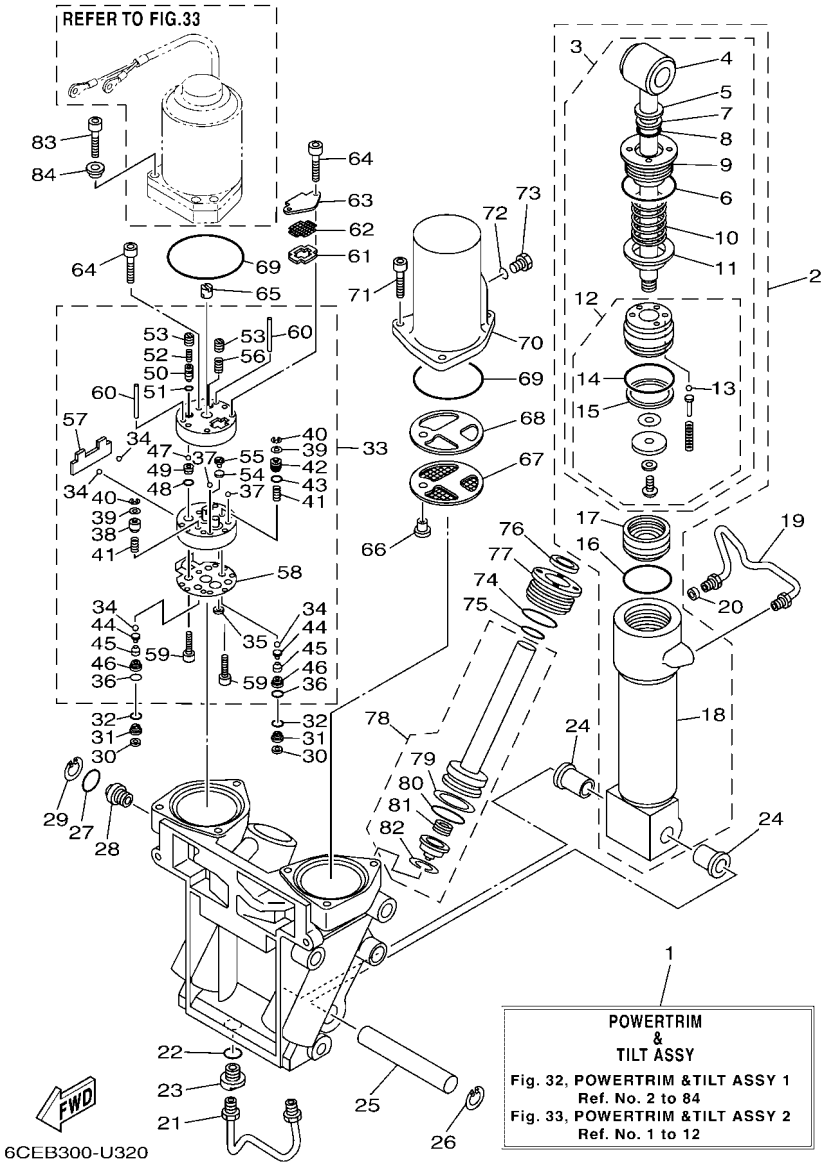

FIG. 32 POWER TRIM & TILT ASSY 1 — PUISSANCE PARER ET INCLINER 1

REF. NO.	PART NO. N° PIECES	DESCRIPTION DESCRIPTION	ET	ET1	ET2	LET	LET1	REMARKS REMARQUES
81	61A–4384H–10	.SPRING .RESSORT	1	1	1	1	1	
82	61A–43875–10	.RING, SNAP .RESSORT	1	1	1	1	1	
83	90110–08M05	BOLT, HEXAGON SOCKET HEAD BOULON, TETE HEXAGONALE CREUSE	3	3	3	3	3	
84	6GR–23113–00	COLLAR COLLIER	3	3	3	3	3	

FIG. 33 POWER TRIM & TILT ASSY 2 — PUISSANCE PARER ET INCLINER 2

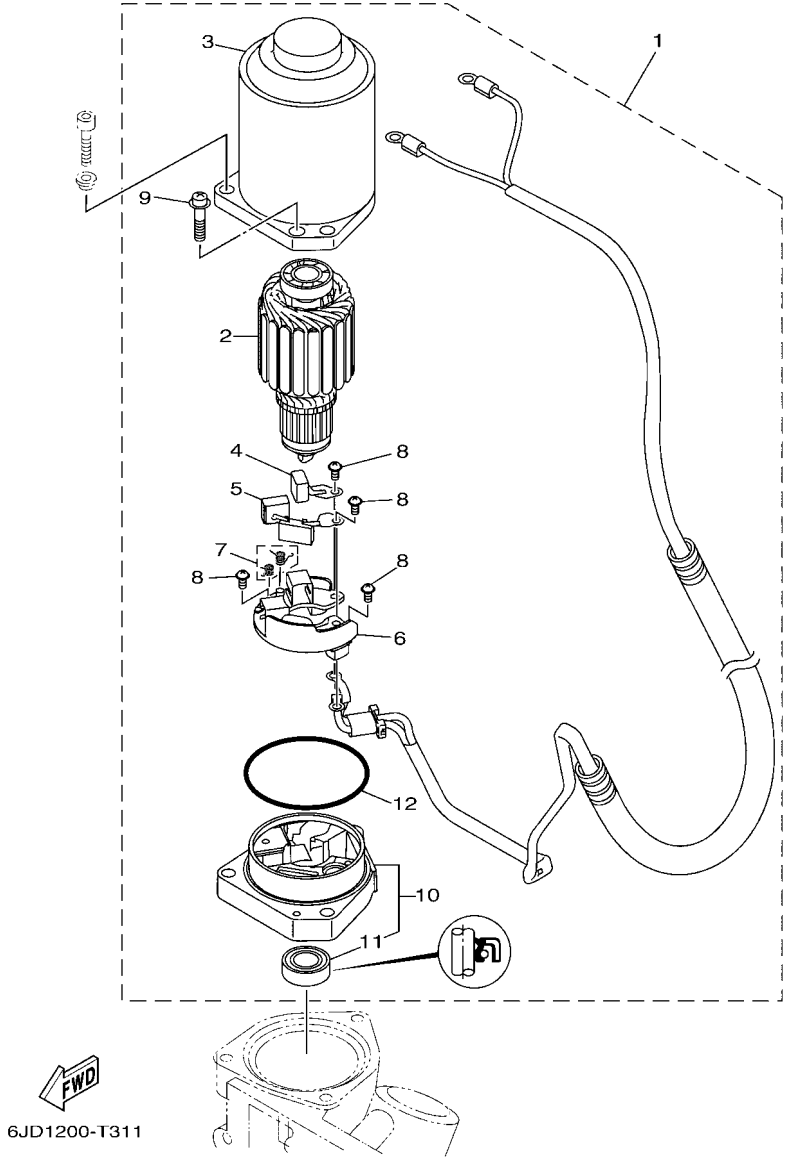

REF. NO.	PART NO. N° PIECES	DESCRIPTION DESCRIPTION	ET	ET1	ET2	LET	LET1	REMARKS REMARQUES
1	69J–43880–11	MOTOR ASSY MOTEUR (ENS.)	1	1	1	1	1	
2	6GR–43805–00	.ARMATURE ASSY .INDUIT (ENS.)	1	1	1	1	1	
3	6GR–43804–00	.STATOR ASSY .STATOR (ENS.)	1	1	1	1	1	
4	6GR–43892–00	.BRUSH 2 .BALAI 2	1	1	1	1	1	
5	6GR–82181–00	.CIRCUIT BREAKER COMP. .RUPTEUR COMPLET	1	1	1	1	1	
6	6GR–4380F–00	.PLATE, BRUSH HOLDER .PLAQUE	1	1	1	1	1	
7	6GR–4386K–00	.SPRING, BRUSH .RESSORT, BALAI	1	1	1	1	1	
8	97602–04310	.SCREW, PAN HEAD WITH WASHER .VIS, AVEC RONDELLE	4	4	4	4	4	
9	67C–43879–10	.SCREW, WITH WASHER .VIS, AVEC RONDELLE	2	2	2	2	2	
10	69J–43881–11	.FRAME, END .BATI	1	1	1	1	1	
11	6GR–43882–01	..OIL SEAL ..JOINT SPI	1	1	1	1	1	
12	6GR–43864–00	.O-RING .JOINT TORIQUE	1	1	1	1	1	

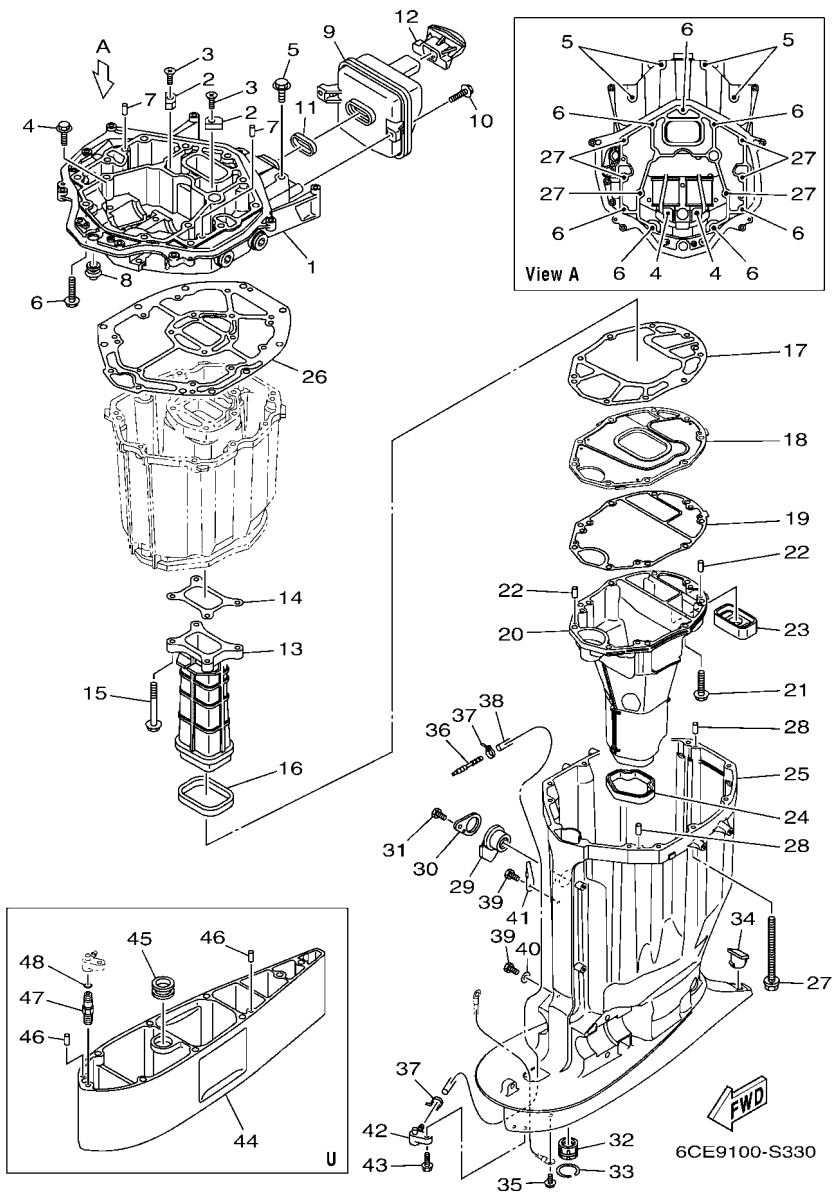

FIG. 34 UPPER CASING FOURREAU

REF. NO.	PART NO. N° PIECES	DESCRIPTION DESCRIPTION	ET	ET1	ET2	LET	LET1	REMARKS REMARQUES
1	6CE–41137–01	GUIDE, EXHAUST COLLECTEUR D'ECHAPPEMENT	1	1	1	1	1	
2	63P–11325–11	ANODE ANODE	2	2	2	2	2	
3	90151–06M02	SCREW, COUNTERSUNK VIS, TETE NOYEE	2	2	2	2	2	
4	90119–08182	BOLT, WITH WASHER BOULON, AVEC RONDELLE	2	2	2	2	2	
5	97E75–10545	BOLT, HEXAGON W/W DEEP RECESS VIS HEXAGONAL AVC RONDELLE	4	4	4	4	4	
6	97E75–10535	BOLT, HEXAGON W/W DEEP RECESS VIS HEXAGONAL AVC RONDELLE	7	7	7	7	7	
7	93608–16M16	PIN, DOWEL AXE	2	2	2	2	2	
8	6E5–42724–00	GROMMET PASSE-FIL	1	1	1	1	1	
9	6CB–14750–A0	SILENCER ASSY SILENCIEUX	1	1	1	1	1	
10	95D95–06020	BOLT, FLANGE DEEP RECESS BOULON FIXATION	2	2	2	2	2	
11	6CB–14755–00	GASKET, SILENCER JOINT, SILENCIEUX	1	1	1	1	1	
12	6CB–42769–01	SEAL, RUBBER BOURRELET, CAOUTCHOUC	1	1	1	1	1	
13	6CB–41132–01	MANIFOLD, EXHAUST PIPE D'ECHAPPEMENT	1	1	1	1	1	
14	6CB–41134–00	GASKET, EXHAUST MANIFOLD JOINT, PIPE D'ECHAPPEMENT	1	1	1	1	1	
15	97E75–08560	BOLT, HEXAGON W/W DEEP RECESS VIS HEXAGONAL AVC RONDELLE	4	4	4	4	4	
16	6CB–41138–00	SEAL, EXT. 1 JOINT DE GROUPE 1	1	1	1	1	1	
17	6CB–41135–00	GASKET, EXHAUST MANIFOLD JOINT, PIPE D'ECHAPPEMENT	1	1	1	1	1	
18	6CE–45181–01	PLATE PLAQUETTE	1	1	1	1	1	
19	6CE–41136–00	GASKET, EXHAUST MANIFOLD 4 JOINT, PIPE D'ECHAPPEMENT 4	1	1	1	1	1	
20	6CE–14711–01	MUFFLER 1 POT D'ECHAPPEMENT 1	1	1	1	1	1	
21	97E75–08535	BOLT, HEXAGON W/W DEEP RECESS VIS HEXAGONAL AVC RONDELLE	9	9	9	9	9	
22	93606–19M23	PIN, DOWEL GOUPILLE	2	2	2	2	2	
23	6CE–45127–00	SEAL JOINT	1	1	1	1	1	
24	6CE–45123–00	GASKET, MUFFLER JOINT, POT DE DETENTE	1	1	1	1	1	
25	6CE–45111–01–8D	CASING, UPPER FOURREAU	1	1	1	1	1	
26	6CB–45113–01	GASKET, UPPER CASING JOINT, TUBE D'ARBRE	1	1	1	1	1	
27	90119–10007	BOLT, WITH WASHER BOULON, AVEC RONDELLE	6	6	6	6	6	

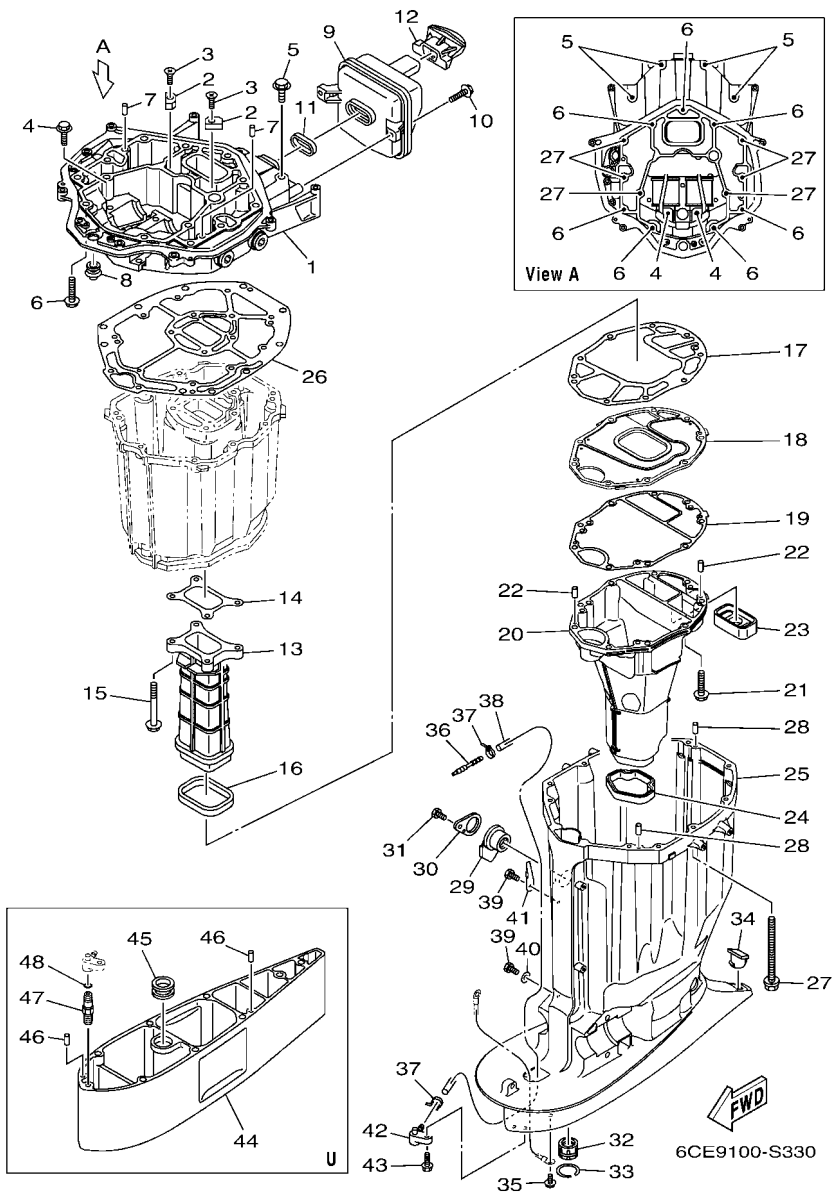

FIG. 34 UPPER CASING — FOURREAU

REF. NO.	PART NO. N° PIECES	DESCRIPTION DESCRIPTION	ET	ET1	ET2	LET	LET1	REMARKS REMARQUES
28	93608–16M16	PIN, DOWEL AXE	2	2	2	2	2	
29	6BB–15316–00	DAMPER 1 AMORTISSEUR 1	1	1	1	1	1	
30	6BB–45152–01	COVER, UPPER CASING 2 CAPUCHON FOURREAU	1	1	1	1	1	
31	97D95–06012	BOLT, HEXAGON DEEP RECESS VIS HEXAGONAL	1	1	1	1	1	
32	69J–45318–01	BUSHING, DRIVE SHAFT DOUILLE, ARBRE MOTEUR	1	1	1	1	1	
33	93420–36M01	CIRCLIP CIRCLIP, TYPE S	1	1	1	1	1	
34	61A–45155–00	CAP CAPUCHON	1	1	1	1	1	
35	95D95–06010	BOLT, FLANGE DEEP RECESS BOULON FIXATION	1	1	1	1	1	
36	6E5–83558–00	END, NIPPLE RACCORD DE NIPPLE				1	1	EXCEPT LAN SPEED EXCEPT LAN SPEED
37	90465–11M10	CLAMP BRIDE	1	1	1			FOR LAN SPEED FOR LAN SPEED
	90465–11M10	CLAMP BRIDE				2	2	EXCEPT LAN SPEED EXCEPT LAN SPEED
38	90445–07034	HOSE (L2470) DURITE (L2470)	1	1	1			FOR LAN SPEED FOR LAN SPEED
	90445–07032	HOSE (L1920) DURITE (L1920)				1	1	EXCEPT LAN SPEED EXCEPT LAN SPEED
39	97D95–06010	BOLT, HEXAGON DEEP RECESS VIS HEXAGONAL	2	2	2	2	2	
40	90201–06M02	WASHER, PLATE RONDELLE, PLATE	1	1	1	1	1	
41	90462–10061	CLAMP BRIDE	1	1	1	1	1	
42	63P–45379–00	NIPPLE, HOSE RACCORD D'ESSENCE	1	1	1	1	1	
43	90119–06287	BOLT, WITH WASHER BOULON, AVEC RONDELLE	1	1	1	1	1	
44	6CE–45211–10–8D	EXTENSION EXTENSION	1	1		1	1	U(30.3") U(30.3")
45	6AW–44366–00	DAMPER, WATER SEAL 2 JOINT, TUBE D'EAU 2	1	1		1	1	U(30.3") U(30.3")
46	93608–16M16	PIN, DOWEL AXE	2	2		2	2	U(30.3") U(30.3")
47	63P–45378–00	NIPPLE, HOSE RACCORD, TUYAU	1	1		1	1	U(30.3") U(30.3")
48	93210–07003	O-RING JOINT TORIQUE	1	1		1	1	U(30.3") U(30.3")

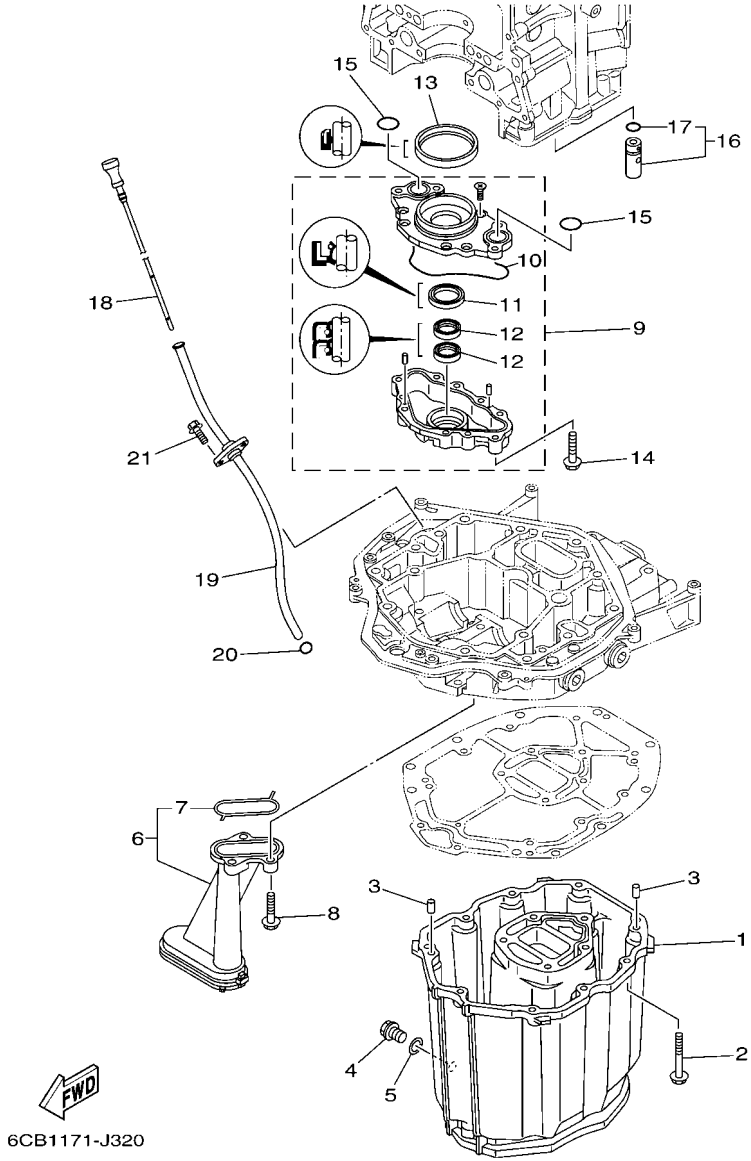

FIG. 35 OIL PAN — VENTILATEUR D'HUILE

REF. NO.	PART NO. N° PIECES	DESCRIPTION DESCRIPTION	ET	ET1	ET2	LET	LET1	REMARKS REMARQUES
1	6CB–15311–01	OIL PAN VENTILATEUR D'HUILE	1	1	1	1	1	
2	97E75–08535	BOLT, HEXAGON W/W DEEP RECESS VIS HEXAGONAL AVC RONDELLE	10	10	10	10	10	
3	93608–16M16	PIN, DOWEL AXE	2	2	2	2	2	
4	90340–14M06	PLUG, STRAIGHT SCREW PLOT, FILETE DROIT	1	1	1	1	1	
5	90430–14M09	GASKET JOINT	1	1	1	1	1	
6	6CB–13411–00	STRAINER, OIL FILTRE, HUILE	1	1	1	1	1	
7	6AW–13415–00	.SEAL, OIL STRAINER .JOINT, FILTRE A HUILE	1	1	1	1	1	
8	95812–06025	BOLT, FLANGE BOULON	3	3	3	3	3	
9	6CB–13300–00	OIL PUMP ASSY POMPE A HUILE COMPLETE	1	1	1	1	1	
10	6CB–13329–00	.GASKET, PUMP COVER .JOINT, COUVERCLE DE POMPE	1	1	1	1	1	
11	6AW–13119–00	.OIL SEAL .JOINT SPY	1	1	1	1	1	
12	69J–13631–00	.OIL SEAL .JOINT SPY	2	2	2	2	2	
13	6CB–11355–00	SEAL, CYLINDER 1 JOINT, SPY CYLINDRE	1	1	1	1	1	
14	95D75–06040	BOLT, FLANGE DEEP RECESS BOULON FIXATION	4	4	4	4	4	
15	93210–26658	O-RING JOINT TORIQUE	2	2	2	2	2	
16	6CB–13490–00	RELIEF VALVE ASSY SOUPAPE DE SECURITE COMPLET	1	1	1	1	1	
17	6CB–13473–00	.O-RING .JOINT TORIQUE	1	1	1	1	1	
18	6CB–15362–00	PLUG, OIL LEVEL PLOT, NIVEAU D'HUILE	1	1	1	1	1	
19	6CB–15377–00	GUIDE, INLET GUIDE D'ADMISSION	1	1	1	1	1	
20	93210–19MJ3	O-RING JOINT TORIQUE	1	1	1	1	1	
21	95D95–06016	BOLT, FLANGE DEEP RECESS BOULON FIXATION	2	2	2	2	2	

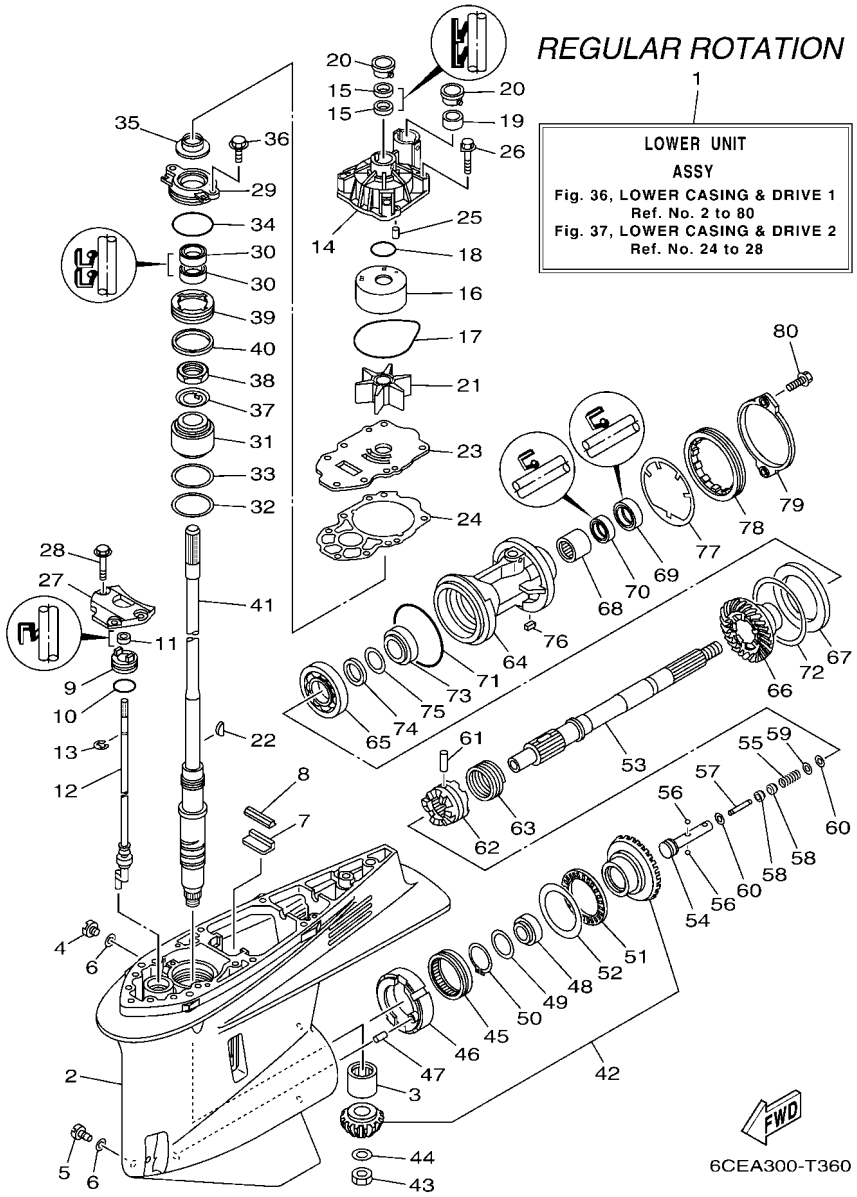

FIG. 36 LOWER CASING & DRIVE 1 — BOITIER D'HELICE TRANSMISSION1

REF. NO.	PART NO. N° PIECES	DESCRIPTION DESCRIPTION	ET	ET1	ET2	LET	LET1	REMARKS REMARQUES
1	6CE–45300–04–8D	LOWER UNIT ASSY UNITE INFERIEURE (ENS.)	1	1	1			X(25.3"),RH X(25.3"),RH
	6CE–45300–14–8D	LOWER UNIT ASSY UNITE INFERIEURE (ENS.)	1	1				U(30.3"),RH U(30.3"),RH
2	6CE–45301–00–8D	CASING, LOWER BEQUILLE	1	1	1			
3	93311–83280	BEARING ROULEMENT	1	1	1			
4	90340–08002	PLUG, STRAIGHT SCREW PLOT, FILETE DROIT	1	1	1			
5	688–45341–10	PLUG, DRAIN BOUCHON DE VIDANGE	1	1	1			
6	90430–08003	GASKET JOINT	2	2	2			
7	663–45376–00	GUIDE, SEAL DAMPER BUTEE, JOINT CAOUTCHOUC	1	1	1			
8	6CE–45375–00	DAMPER, SEAL BOURRELET, CAOUTCHOUC	1	1	1			
9	6CE–45321–10	PLATE PLAQUETTE	1	1	1			X(25.3") X(25.3")
	6CE–45321–20	PLATE PLAQUETTE	1	1				U(30.3") U(30.3")
10	93210–33M49	O-RING JOINT TORIQUE	1	1	1			
11	93106–09014	OIL SEAL JOINT SPY	1	1	1			X(25.3") X(25.3")
	93106–10001	OIL SEAL JOINT SPY	1	1				U(30.3") U(30.3")
12	6CE–44150–00	SHIFT CAM ASSY CAME D'INVERSION	1	1	1			X(25.3"),RH X(25.3"),RH
	6CE–44150–10	SHIFT CAM ASSY CAME D'INVERSION	1	1				U(30.3"),RH U(30.3"),RH
13	99001–08600	CIRCLIP CIRCLIP	1	1	1			X(25.3") X(25.3")
	99001–09600	CIRCLIP CIRCLIP	1	1				U(30.3") U(30.3")
14	6CE–44311–01	HOUSING, WATER PUMP CORPS, POMPE A EAU	1	1	1			
15	93104–22M07	OIL SEAL JOINT SPY	2	2	2			
16	6AW–44322–00	INSERT, CARTRIDGE CUVETTE	1	1	1			
17	93210–94003	O-RING JOINT TORIQUE	1	1	1			
18	93210–37160	O-RING JOINT TORIQUE	1	1	1			
19	6AW–44365–00	DAMPER, WATER SEAL 1 JOINT, TUBE D'EAU 1	1	1	1			
20	6AW–44312–00	COVER, WATER PUMP HOUSING COUVERCLE	2	2	2			
21	6CE–44352–00	IMPELLER TURBINE	1	1	1			
22	90280–04002	KEY, WOODRUFF CLAVETTE, DEMI-LUNE	1	1	1			

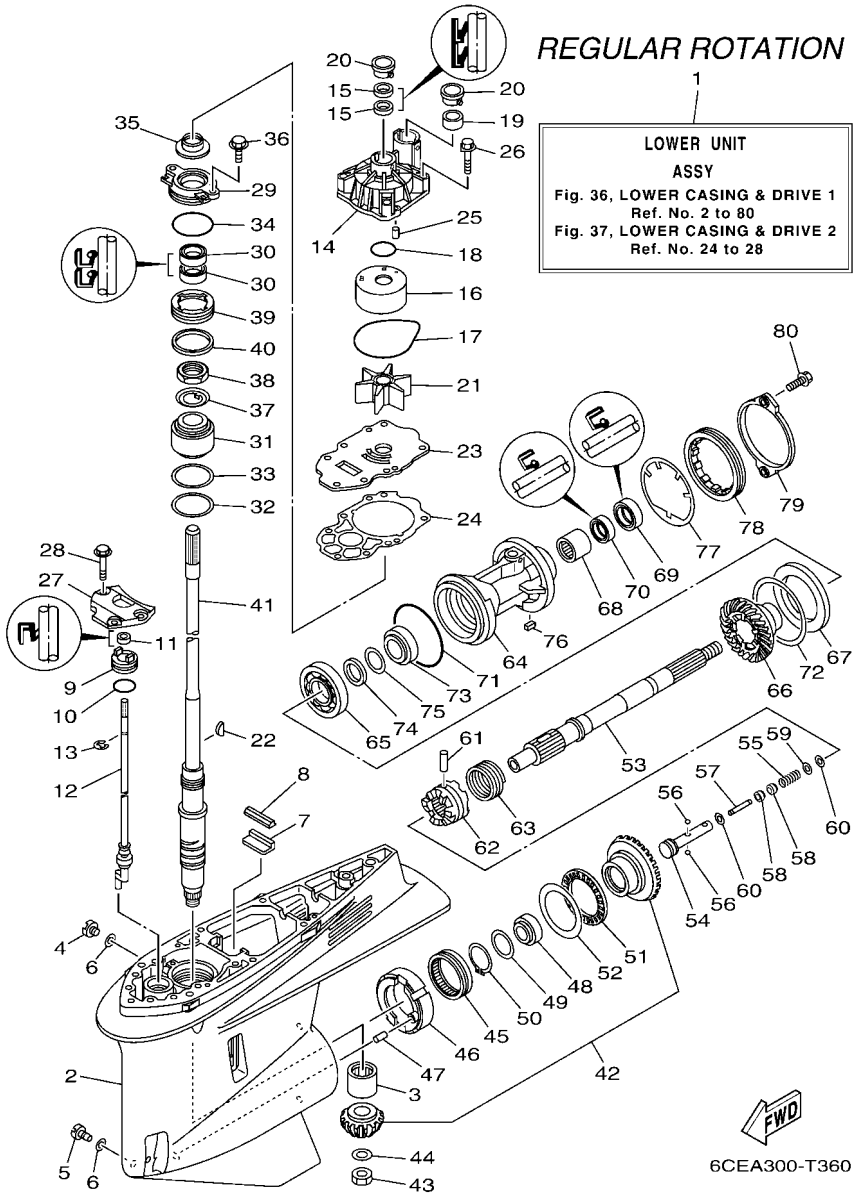

FIG. 36 LOWER CASING & DRIVE 1 — BOITIER D'HELICE TRANSMISSION1

REF. NO.	PART NO. N° PIECES	DESCRIPTION DESCRIPTION	ET	ET1	ET2	LET	LET1	REMARKS REMARQUES
23	6CE–44323–01	OUTER PLATE, CARTRIDGE PLAQUE EXTERIEURE	1	1	1			
24	6CE–44315–00	GASKET, WATER PUMP JOINT, POMPE A EAU	1	1	1			
25	93606–12019	PIN, DOWEL GOUPILLE	2	2	2			
26	90119–08191	BOLT, WITH WASHER BOULON, AVEC RONDELLE	4	4	4			
27	6CB–44312–00	COVER, WATER PUMP HOUSING COUVERCLE	1	1	1			
28	90119–08180	BOLT, WITH WASHER BOULON, AVEC RONDELLE	3	3	3			
29	6CE–45335–00–9S	HOUSING, OIL SEAL LOGEMENT DE JOINT SPY	1	1	1			
30	93101–28019	OIL SEAL JOINT SPY	2	2	2			
31	93399–99966	BEARING ROULEMENT	1	1	1			
32	90201–62008	WASHER, PLATE RONDELLE, PLATE	1	1	1			
33	6CE–45587–00	SHIM (T:0.10MM) CALE (T:0.10MM)	1	1	1			UR UR
	6CE–45587–10	SHIM (T:0.12MM) CALE (T:0.12MM)	1	1	1			UR UR
	6CE–45587–20	SHIM (T:0.15MM) CALE (T:0.15MM)	1	1	1			UR UR
	6CE–45587–30	SHIM (T:0.18MM) CALE (T:0.18MM)	1	1	1			UR UR
	6CE–45587–40	SHIM (T:0.30MM) CALE (T:0.30MM)	1	1	1			UR UR
	6CE–45587–50	SHIM (T:0.40MM) CALE (T:0.40MM)	1	1	1			UR UR
	6CE–45587–60	SHIM (T:0.50MM) CALE (T:0.50MM)	1	1	1			UR UR
34	93210–64488	O-RING JOINT TORIQUE	1	1	1			
35	6AW–45344–00	COVER, OIL SEAL FLASQE, JOINT D'HUILE	1	1	1			
36	97E95–08520	BOLT, HEXAGON W/W DEEP RECESS VIS HEXAGONAL AVC RONDELLE	2	2	2			
37	90214–30003	WASHER, CLAW RONDELLE, A GRIFFES	1	1	1			
38	90170–30M18	NUT ECROU	1	1	1			
39	6CE–45244–00	NUT ECROU	1	1	1			
40	6CE–45539–00	SPACER 2 ENTRETOISE 2	1	1	1			
41	6CE–45501–00	DRIVE SHAFT COMP. ARBRE MOTEUR COMP.	1	1	1			X(25.3") X(25.3")
	6CE–45501–10	DRIVE SHAFT COMP. ARBRE MOTEUR COMP.	1	1				U(30.3") U(30.3")
42	6CE–45550–00	GEAR SET KIT, PIGNON	1	1	1			

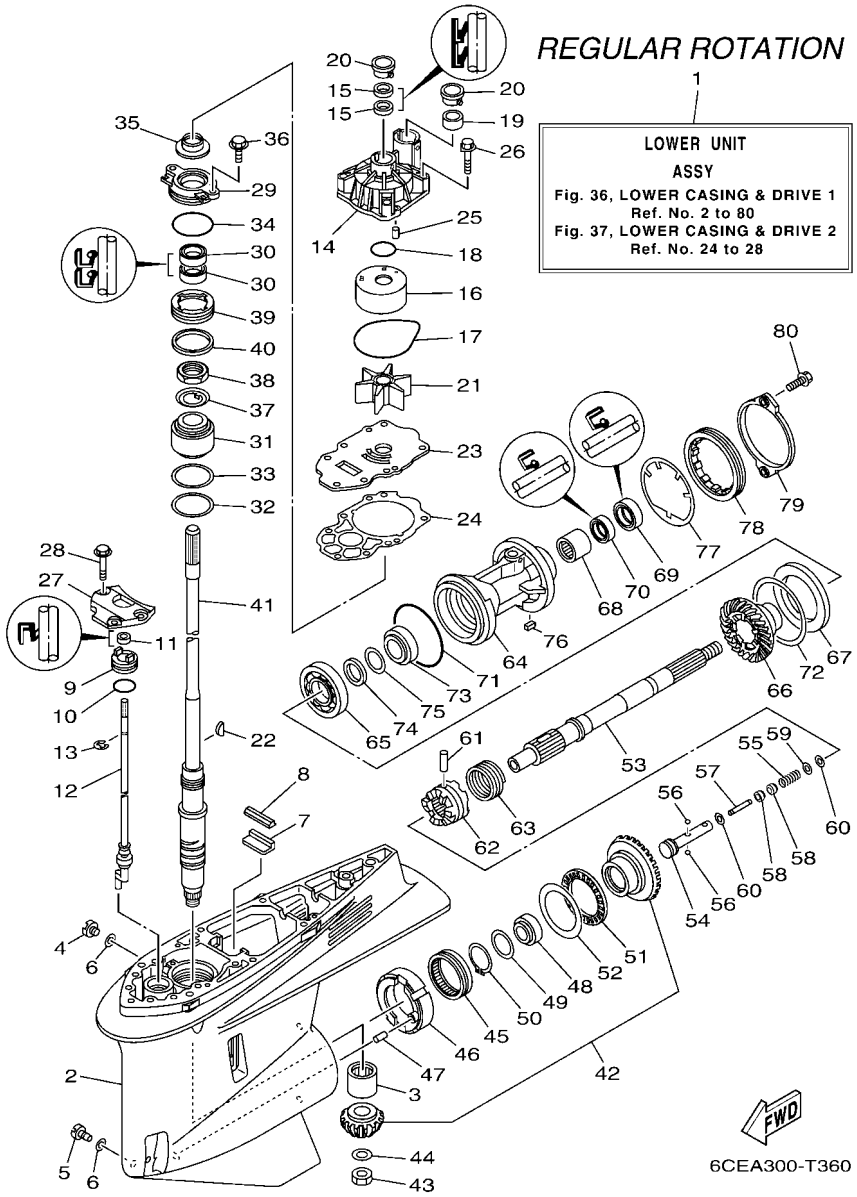

FIG. 36 LOWER CASING & DRIVE 1 — BOITIER D'HELICE TRANSMISSION1

REF. NO.	PART NO. N° PIECES	DESCRIPTION DESCRIPTION	ET	ET1	ET2	LET	LET1	REMARKS REMARQUES
43	90170–16M19	NUT ECROU	1	1	1			
44	90201–16M00	WASHER, PLATE RONDELLE, PLATE	1	1	1			
45	93311–85894	BEARING ROULEMENT	1	1	1			
46	6CB–45824–00	ADAPTER ADAPTATEUR	1	1	1			
47	93608–16M16	PIN, DOWEL AXE	1	1	1			
48	93332–000A4	BEARING ROULEMENT	1	1	1			
49	90201–41008	WASHER, PLATE RONDELLE, PLATE	1	1	1			
50	99009–47500	CIRCLIP CIRCLIP	1	1	1			
51	93340–67011	BEARING CERVEAUX DE DIRECTION	1	1	1			
52	6CB–45567–00	SHIM (T:2.00MM) CALE (T:2.00MM)	1	1	1			UR UR
	6CB–45567–10	SHIM (T:2.03MM) CALE (T:2.03MM)	1	1	1			UR UR
	6CB–45567–20	SHIM (T:2.06MM) CALE (T:2.06MM)	1	1	1			UR UR
	6CB–45567–30	SHIM (T:2.09MM) CALE (T:2.09MM)	1	1	1			UR UR
	6CB–45567–40	SHIM (T:2.12MM) CALE (T:2.12MM)	1	1	1			UR UR
	6CB–45567–50	SHIM (T:2.15MM) CALE (T:2.15MM)	1	1	1			UR UR
53	6CB–45611–00	SHAFT, PROPELLER ARBRE, HELICE	1	1	1			
54	6CB–45634–00	SLIDE, SHIFT CONTRE-POUSSOIR	1	1	1			
55	90501–10M77	SPRING, COMPRESSION RESSORT, COMPRESSION	1	1	1			
56	93501–04011	BALL BILLE	2	2	2			
57	6H1–45668–00	SHAFT, FREE 1 AXE 1	1	1	1			
58	61A–45635–00	PLUNGER, SHIFT POUSSOIR D'EMBRAYAGE	2	2	2			
59	90201–02M00	WASHER, PLATE RONDELLE, PLATE	1	1	1			
60	90183–02M03	NUT, SPRING ECROU, RESSORT	2	2	2			
61	90250–08M07	PIN, STRAIGHT GOUPILLE, DROITE	1	1	1			
62	6CE–45631–00	CLUTCH, DOG CRABOT	1	1	1			
63	6E5–45633–01	RING, CROSS PIN JONC, GOUPILLE CRABOT	1	1	1			
64	6CE–45332–00–CA	HOUSING, BEARING FLASQUE, ROULEMENT	1	1	1			

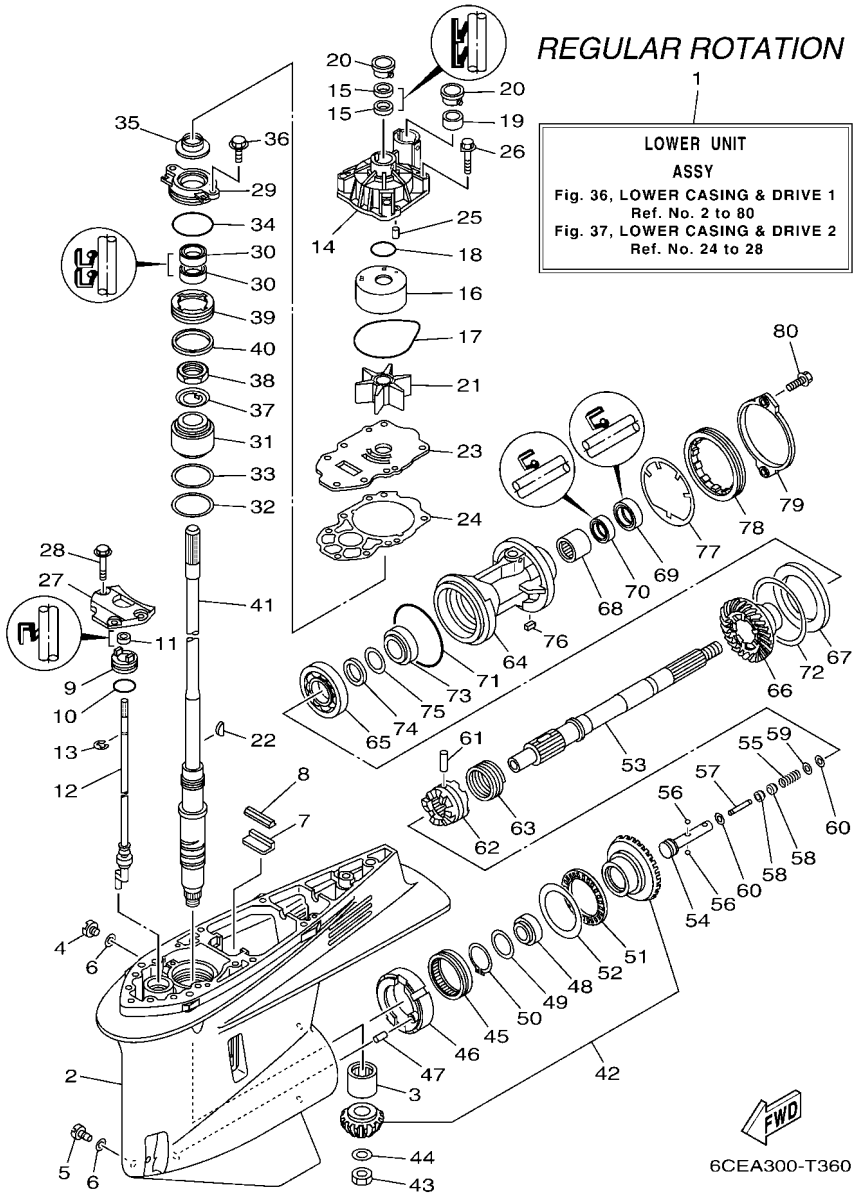

FIG. 36 LOWER CASING & DRIVE 1 — BOITIER D'HELICE TRANSMISSION1

REF. NO.	PART NO. N° PIECES	DESCRIPTION DESCRIPTION	ET	ET1	ET2	LET	LET1	REMARKS REMARQUES
65	93306–209U0	BEARING ROULEMENT	1	1	1			
66	6CE–45571–00	GEAR 2 (21T) PIGNON 2 (21T)	1	1	1			
67	6CB–45576–00	WASHER, THRUST 2 RONDELLE DE CALAGE 2	1	1	1			
68	93315–43061	BEARING ROULEMENT	1	1	1			
69	93101–30030	OIL SEAL JOINT SPY	1	1	1			
70	93101–30019	OIL SEAL JOINT SPY	1	1	1			
71	93211–02001	O-RING JOINT TORIQUE	1	1	1			
72	6CB–45577–00	SHIM (T:0.10MM) CALE (T:0.10MM)	1	1	1			UR UR
	6CB–45577–10	SHIM (T:0.12MM) CALE (T:0.12MM)	1	1	1			UR UR
	6CB–45577–20	SHIM (T:0.15MM) CALE (T:0.15MM)	1	1	1			UR UR
	6CB–45577–30	SHIM (T:0.18MM) CALE (T:0.18MM)	1	1	1			UR UR
	6CB–45577–40	SHIM (T:0.30MM) CALE (T:0.30MM)	1	1	1			UR UR
	6CB–45577–50	SHIM (T:0.40MM) CALE (T:0.40MM)	1	1	1			UR UR
	6CB–45577–60	SHIM (T:0.50MM) CALE (T:0.50MM)	1	1	1			UR UR
73	93332–000A5	BEARING ROULEMENT	1	1	1			
74	90201–32008	WASHER, PLATE RONDELLE, PLATE	1	1	1			
75	676–45567–00	SHIM (T:0.7MM) CALE	1	1	1			UR UR
	676–45567–10	SHIM (T:0.8MM) CALE	1	1	1			UR UR
	676–45567–20	SHIM (T:0.9MM) CALE	1	1	1			UR UR
	676–45567–30	SHIM (T:1.0MM) CALE	1	1	1			UR UR
	676–45567–40	SHIM (T:1.1MM) CALE	1	1	1			UR UR
	676–45567–50	SHIM (T:1.2MM) CALE	1	1	1			UR UR
76	90282–05008	KEY, STRAIGHT CLAVETTE, DROITE	1	1	1			
77	6CB–45383–00	WASHER, CLAW FREIN D'ECROU	1	1	1			
78	6CB–45384–00	NUT ECROU	1	1	1			
79	6CE–45361–10	CAP, LOWER CASING COUVERCLE, BOITIER D'HELICE	1	1	1			
80	90105–08M61	BOLT, FLANGE BOULON, A COLLERETTE	2	2	2			

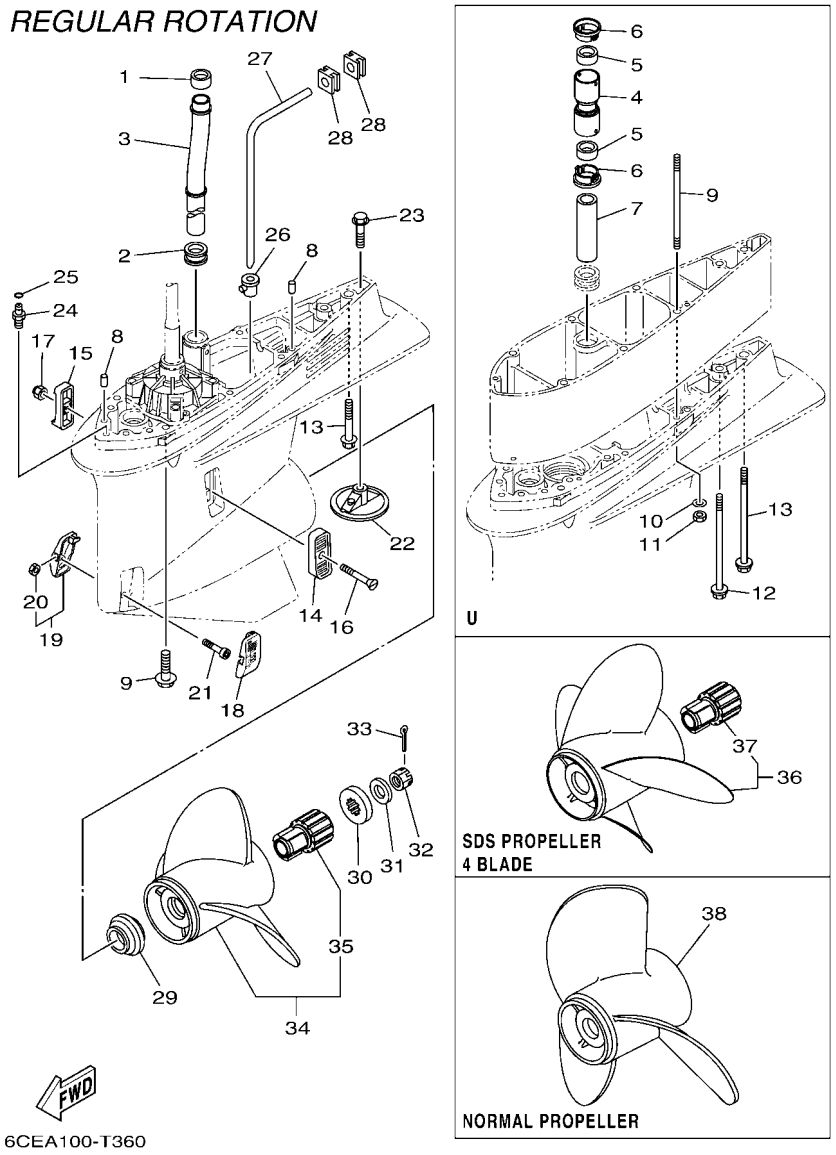

FIG. 37 LOWER CASING & DRIVE 2 — BOITIER D'HELICE TRANSMISSION2

REF. NO.	PART NO. N° PIECES	DESCRIPTION DESCRIPTION	ET	ET1	ET2	LET	LET1	REMARKS REMARQUES
1	6AW–44365–00	DAMPER, WATER SEAL 1 JOINT, TUBE D'EAU 1	1	1	1			
2	6AW–44366–00	DAMPER, WATER SEAL 2 JOINT, TUBE D'EAU 2	1	1	1			
3	6CE–44361–00	TUBE, WATER 1 TUBE D'EAU 1	1	1	1			
4	6CE–44362–00	TUBE, WATER 2 TUBE D'EAU 2	1	1				U(30.3") U(30.3")
5	6AW–44365–00	DAMPER, WATER SEAL 1 JOINT, TUBE D'EAU 1	2	2				U(30.3") U(30.3")
6	6AW–44312–00	COVER, WATER PUMP HOUSING COUVERCLE	2	2				U(30.3") U(30.3")
7	6AW–44363–00	TUBE, WATER 3 TUBE D'EAU 3	1	1				U(30.3") U(30.3")
8	93608–16M16	PIN, DOWEL AXE	2	2	2			
9	90119–10038	BOLT, WITH WASHER BOULON, AVEC RONDELLE	7	7	7			X(25.3") X(25.3")
	90116–10041	BOLT, STUD GOUJON	6	6				U(30.3") U(30.3")
10	90201–10048	WASHER, PLATE RONDELLE, PLATE	6	6				U(30.3") U(30.3")
11	90170–10009	NUT ECROU	6	6				U(30.3") U(30.3")
12	90119–10009	BOLT, WITH WASHER BOULON, AVEC RONDELLE	1	1				U(30.3") U(30.3")
13	97E75–10570	BOLT, HEXAGON W/W DEEP RECESS VIS HEXAGONAL AVC RONDELLE	1	1	1			X(25.3") X(25.3")
	90119–10008	BOLT, WITH WASHER BOULON, AVEC RONDELLE	1	1				U(30.3") U(30.3")
14	6P2–45214–00	COVER, WATER INLET 1 GRILLE, ENTREE D'EAU 1	1	1	1			
15	6P2–45215–00	COVER, WATER INLET 2 GRILLE, ENTREE D'EAU 2	1	1	1			
16	90152–05M08	SCREW, COUNTERSUNK VIS, TETE NOYEE	1	1	1			
17	90185–05002	NUT, NYLON ECROU,AUTO-BLOQUANT	1	1	1			
18	6CE–45224–00	COVER, WATER INLET 3 GRILLE, ENTREE D'EAU 3	1	1	1			
19	6CE–45225–00	COVER, WATER INLET 4 GRILLE, ENTREE D'EAU 4	1	1	1			
20	90185–05002	.NUT, NYLON .ECROU,AUTO-BLOQUANT	1	1	1			
21	90110–05039	BOLT, HEXAGON SOCKET HEAD BOULON, TETE HEXAGONALE CREUSE	1	1	1			
22	6CE–45373–00	ANODE ANODE	1	1	1			
23	90105–10M00	BOLT, FLANGE BOULON, A COLLERETTE	1	1	1			
24	63P–45378–00	NIPPLE, HOSE RACCORD, TUYAU	1	1	1			
25	93210–07003	O-RING JOINT TORIQUE	1	1	1			

FIG. 37 LOWER CASING & DRIVE 2 — BOITIER D'HELICE TRANSMISSION2

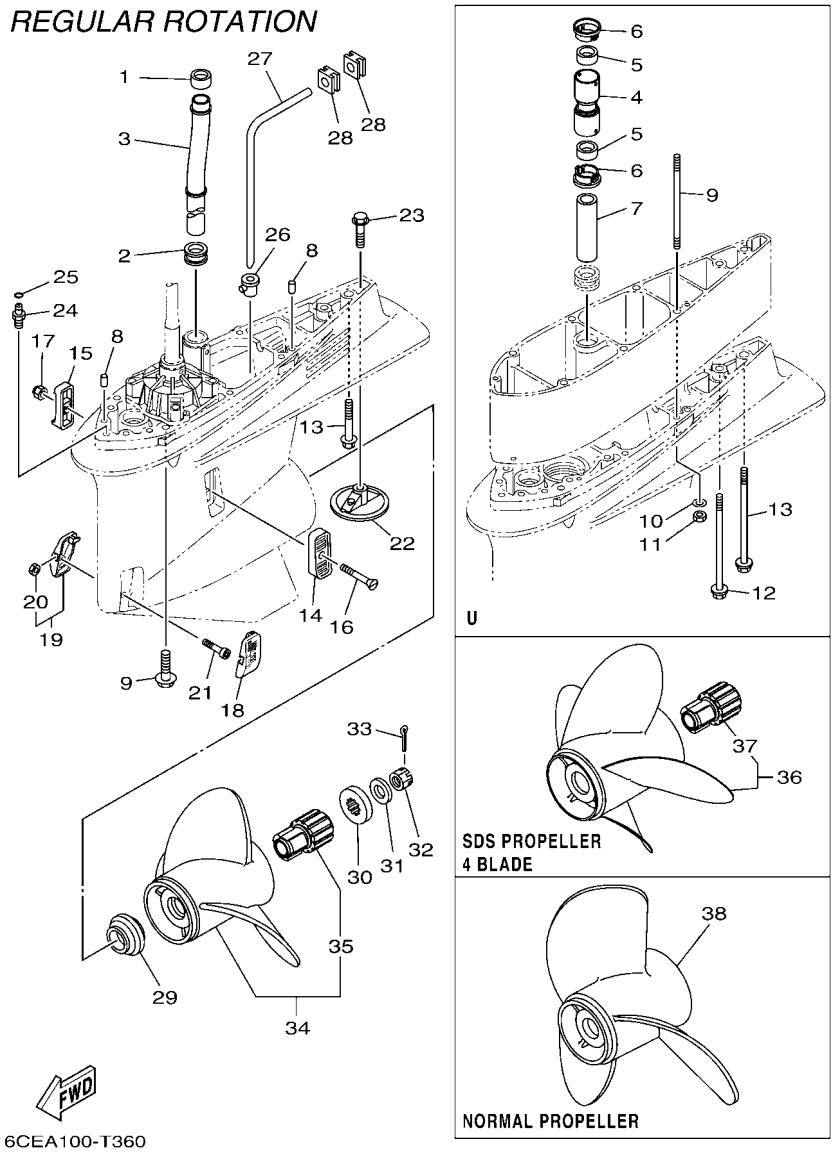

REF. NO.	PART NO. N° PIECES	DESCRIPTION DESCRIPTION	ET	ET1	ET2	LET	LET1	REMARKS REMARQUES
26	6D0–44367–00	DAMPER, WATER SEAL 3 JOINT TUBE D'EAU 3	1	1	1			
27	6D0–44362–01	TUBE, WATER 2 TUBE D'EAU 2	1	1	1			
28	6D0–44366–00	DAMPER, WATER SEAL 2 JOINT, TUBE D'EAU 2	2	2	2			
29	69J–45987–00	SPACER 1 ENTRETOISE 1	1	1	1			
30	688–45997–01	SPACER 2 ENTRETOISE 2	1	1	1			
31	92990–18200	WASHER RONDELLE, PLATE	1	1	1			
32	90171–18M04	NUT, CASTLE ECROU, CRENELE	1	1	1			
33	91490–40030	PIN. COTTER GOUPILLE	1	1	1			
34	6CE–45930–20	PROPELLER (3X15-3/4"X13"-T) HELICE (3X15-3/4"X13"-T)	1	1	1			UR SDS 3 BLADE UR SDS 3 BLADE
	6CE–45976–20	PROPELLER (3X15-3/4"X15"-T) HELICE (3X15-3/4"X15"-T)	1	1	1			UR SDS 3 BLADE UR SDS 3 BLADE
	6CE–45978–20	PROPELLER (3X15-1/2"X17"-T) HELICE (3X15-1/2"X17"-T)	1	1	1			UR SDS 3 BLADE UR SDS 3 BLADE
	6CE–45970–20	PROPELLER (3X15-1/4"X19"-T) HELICE (3X15-1/4"X19"-T)	1	1	1			UR SDS 3 BLADE UR SDS 3 BLADE
	6CE–45972–20	PROPELLER (3X15"X21"-T) HELICE (3X15"X21"-T)	1	1	1			UR SDS 3 BLADE UR SDS 3 BLADE
	6CE–45974–20	PROPELLER (3X14-3/4"X23"-T) HELICE (3X14-3/4"X23"-T)	1	1	1			UR SDS 3 BLADE UR SDS 3 BLADE
35	6CE–45C81–10	.DAMPER RUBBER, PROPELLER 1 .AMORTISSEUR HELICE 1	1	1	1			
36	6CE–45B70–20	PROPELLER (4X15"X21"-T) HELICE (4X15"X21"-T)	1	1	1			UR SDS 4 BLADE UR SDS 4 BLADE
	6CE–45B72–20	PROPELLER (4X15"X22"-T) HELICE (4X15"X22"-T)	1	1	1			UR SDS 4 BLADE UR SDS 4 BLADE
	6CE–45B74–20	PROPELLER (4X15"X23"-T) HELICE (4X15"X23"-T)	1	1	1			UR SDS 4 BLADE UR SDS 4 BLADE
37	6CE–45C81–10	.DAMPER RUBBER, PROPELLER 1 .AMORTISSEUR HELICE 1	1	1	1			
38	6D0–45970–10	PROPELLER (3X15-1/4"X19"-T) HELICE (3X15-1/4"X19"-T)	1	1	1			AP NORMAL PROP. AP NORMAL PROP.

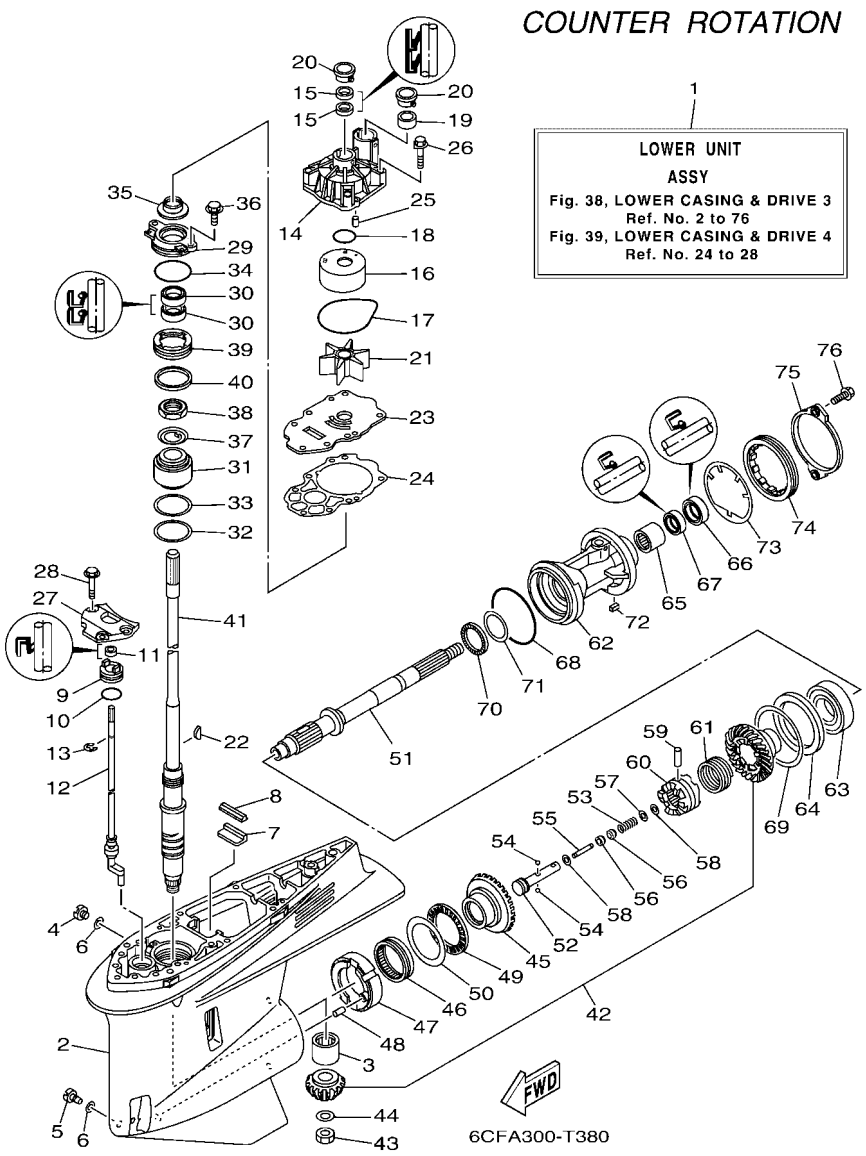

FIG. 38 LOWER CASING & DRIVE 3 — BOITIER D'HELICE TRANSMISSION3

REF. NO.	PART NO. N° PIECES	DESCRIPTION DESCRIPTION	ET	ET1	ET2	LET	LET1	REMARKS REMARQUES
1	6CF–45300–04–8D	LOWER UNIT ASSY UNITE INFERIEURE (ENS.)				1	1	X(25.3"),LH X(25.3"),LH
	6CF–45300–14–8D	LOWER UNIT ASSY UNITE INFERIEURE (ENS.)				1	1	U(30.3"),LH U(30.3"),LH
2	6CE–45301–00–8D	CASING, LOWER BEQUILLE				1	1	
3	93311–83280	BEARING ROULEMENT				1	1	
4	90340–08002	PLUG, STRAIGHT SCREW PLOT, FILETE DROIT				1	1	
5	688–45341–10	PLUG, DRAIN BOUCHON DE VIDANGE				1	1	
6	90430–08003	GASKET JOINT				2	2	
7	663–45376–00	GUIDE, SEAL DAMPER BUTEE, JOINT CAOUTCHOUC				1	1	
8	6CE–45375–00	DAMPER, SEAL BOURRELET, CAOUTCHOUC				1	1	
9	6CE–45321–10	PLATE PLAQUETTE				1	1	X(25.3") X(25.3")
	6CE–45321–20	PLATE PLAQUETTE				1	1	U(30.3") U(30.3")
10	93210–33M49	O-RING JOINT TORIQUE				1	1	
11	93106–09014	OIL SEAL JOINT SPY				1	1	X(25.3") X(25.3")
	93106–10001	OIL SEAL JOINT SPY				1	1	U(30.3") U(30.3")
12	6CF–44150–00	SHIFT CAM ASSY CAME D'INVERSION				1	1	X(25.3"),LH X(25.3"),LH
	6CF–44150–10	SHIFT CAM ASSY CAME D'INVERSION				1	1	U(30.3"),LH U(30.3"),LH
13	99001–08600	CIRCLIP CIRCLIP				1	1	X(25.3") X(25.3")
	99001–09600	CIRCLIP CIRCLIP				1	1	U(30.3") U(30.3")
14	6CE–44311–01	HOUSING, WATER PUMP CORPS, POMPE A EAU				1	1	
15	93104–22M07	OIL SEAL JOINT SPY				2	2	
16	6AW–44322–00	INSERT, CARTRIDGE CUVETTE				1	1	
17	93210–94003	O-RING JOINT TORIQUE				1	1	
18	93210–37160	O-RING JOINT TORIQUE				1	1	
19	6AW–44365–00	DAMPER, WATER SEAL 1 JOINT, TUBE D'EAU 1				1	1	
20	6AW–44312–00	COVER, WATER PUMP HOUSING COUVERCLE				2	2	
21	6CE–44352–00	IMPELLER TURBINE				1	1	
22	90280–04002	KEY, WOODRUFF CLAVETTE, DEMI-LUNE				1	1	

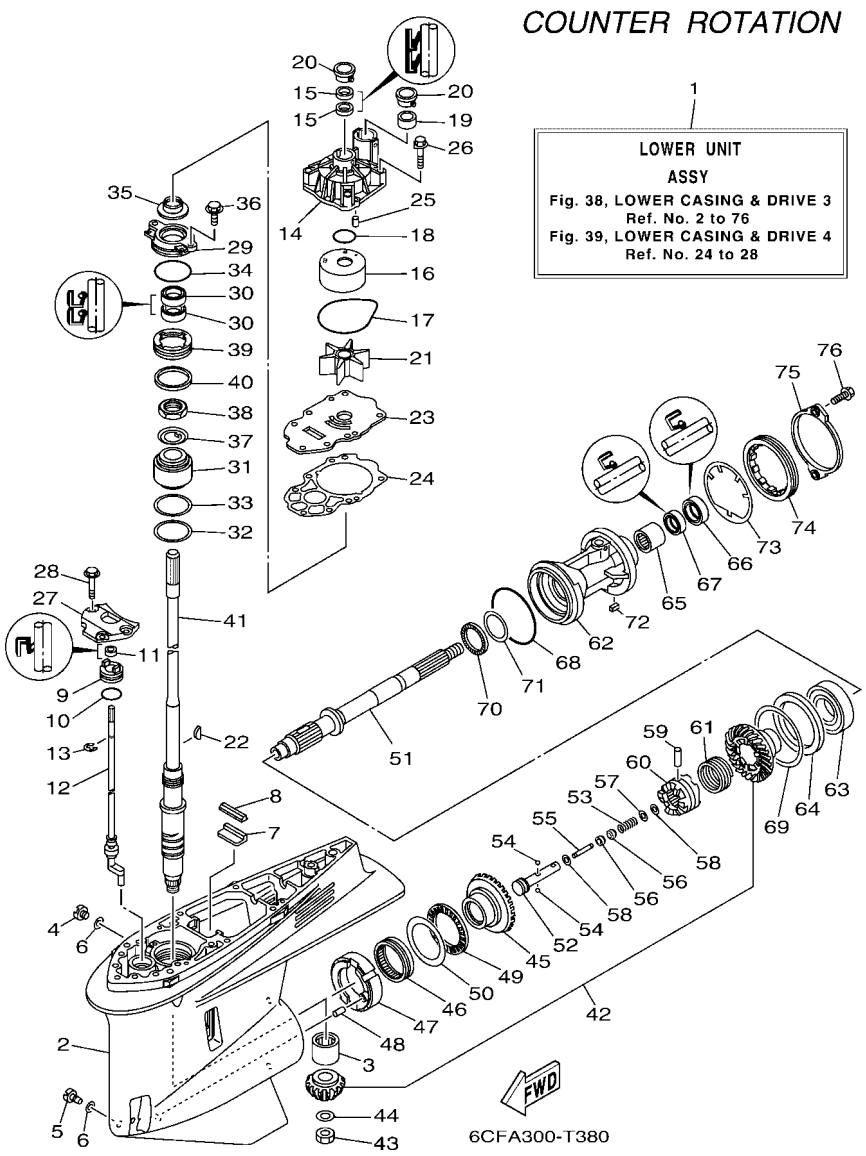

FIG. 38 LOWER CASING & DRIVE 3 — BOITIER D'HELICE TRANSMISSION3

REF. NO.	PART NO. N° PIECES	DESCRIPTION DESCRIPTION	ET	ET1	ET2	LET	LET1	REMARKS REMARQUES
23	6CE–44323–01	OUTER PLATE, CARTRIDGE PLAQUE EXTERIEURE				1	1	
24	6CE–44315–00	GASKET, WATER PUMP JOINT, POMPE A EAU				1	1	
25	93606–12019	PIN, DOWEL GOUPILLE				2	2	
26	90119–08191	BOLT, WITH WASHER BOULON, AVEC RONDELLE				4	4	
27	6CB–44312–00	COVER, WATER PUMP HOUSING COUVERCLE				1	1	
28	90119–08180	BOLT, WITH WASHER BOULON, AVEC RONDELLE				3	3	
29	6CE–45335–00–9S	HOUSING, OIL SEAL LOGEMENT DE JOINT SPY				1	1	
30	93101–28019	OIL SEAL JOINT SPY				2	2	
31	93399–99966	BEARING ROULEMENT				1	1	
32	90201–62008	WASHER, PLATE RONDELLE, PLATE				1	1	
33	6CE–45587–00	SHIM (T:0.10MM) CALE (T:0.10MM)				1	1	UR UR
	6CE–45587–10	SHIM (T:0.12MM) CALE (T:0.12MM)				1	1	UR UR
	6CE–45587–20	SHIM (T:0.15MM) CALE (T:0.15MM)				1	1	UR UR
	6CE–45587–30	SHIM (T:0.18MM) CALE (T:0.18MM)				1	1	UR UR
	6CE–45587–40	SHIM (T:0.30MM) CALE (T:0.30MM)				1	1	UR UR
	6CE–45587–50	SHIM (T:0.40MM) CALE (T:0.40MM)				1	1	UR UR
	6CE–45587–60	SHIM (T:0.50MM) CALE (T:0.50MM)				1	1	UR UR
34	93210–64488	O-RING JOINT TORIQUE				1	1	
35	6AW–45344–00	COVER, OIL SEAL FLASQE, JOINT D'HUILE				1	1	
36	97E95–08520	BOLT, HEXAGON W/W DEEP RECESS VIS HEXAGONAL AVC RONDELLE				2	2	
37	90214–30003	WASHER, CLAW RONDELLE, A GRIFFES				1	1	
38	90170–30M18	NUT ECROU				1	1	
39	6CE–45244–00	NUT ECROU				1	1	
40	6CE–45539–00	SPACER 2 ENTRETOISE 2				1	1	
41	6CE–45501–00	DRIVE SHAFT COMP. ARBRE MOTEUR COMP.				1	1	X(25.3") X(25.3")
	6CE–45501–10	DRIVE SHAFT COMP. ARBRE MOTEUR COMP.				1	1	U(30.3") U(30.3")
42	6CF–45550–00	GEAR SET KIT, PIGNON				1	1	

FIG. 38 LOWER CASING & DRIVE 3 — BOITIER D'HELICE TRANSMISSION3

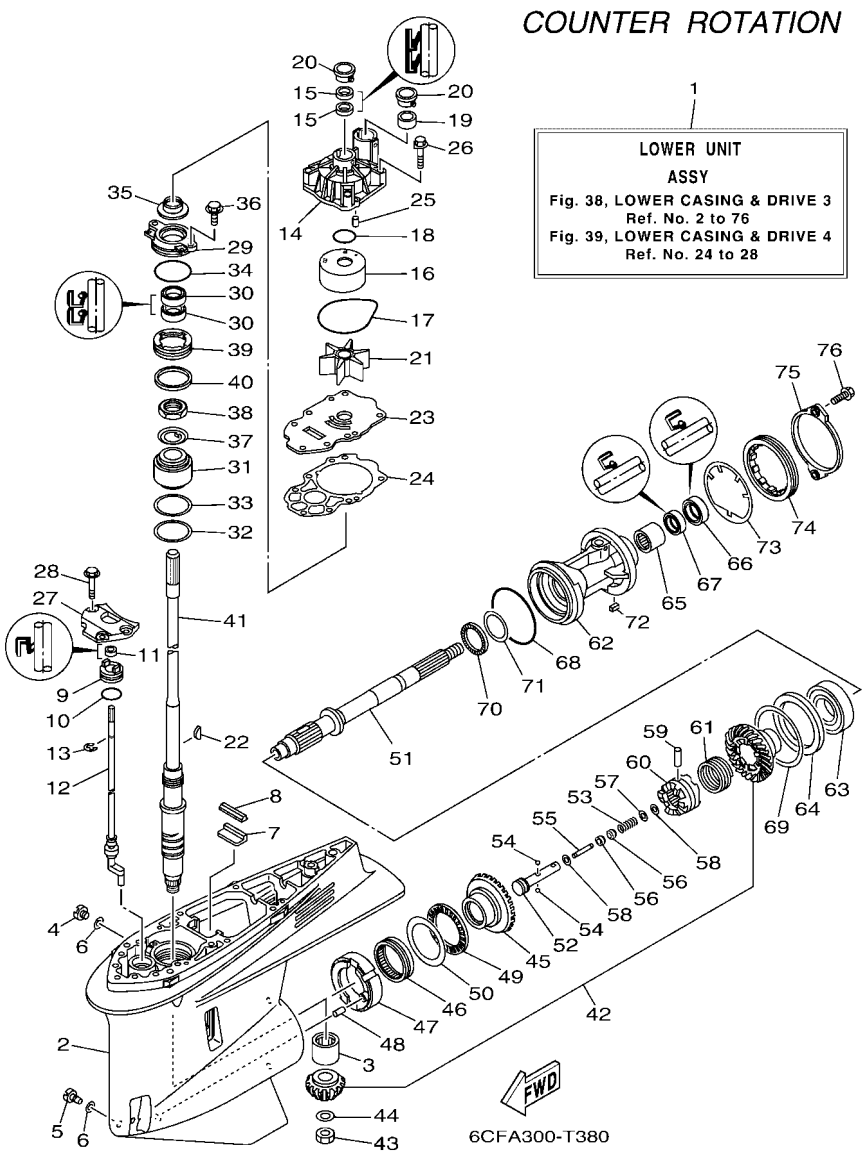

REF. NO.	PART NO. N° PIECES	DESCRIPTION DESCRIPTION	ET	ET1	ET2	LET	LET1	REMARKS REMARQUES
43	90170–16M19	NUT ECROU				1	1	
44	90201–16M00	WASHER, PLATE RONDELLE, PLATE				1	1	
45	6CF–45560–01	GEAR 1 (21T) PIGNON 1 (21T)				1	1	
46	93311–85894	BEARING ROULEMENT				1	1	
47	6CB–45824–00	ADAPTER ADAPTATEUR				1	1	
48	93608–16M16	PIN, DOWEL AXE				1	1	
49	93340–67011	BEARING CERVEAUX DE DIRECTION				1	1	
50	6CB–45567–00	SHIM (T:2.00MM) CALE (T:2.00MM)				1	1	UR UR
	6CB–45567–10	SHIM (T:2.03MM) CALE (T:2.03MM)				1	1	UR UR
	6CB–45567–20	SHIM (T:2.06MM) CALE (T:2.06MM)				1	1	UR UR
	6CB–45567–30	SHIM (T:2.09MM) CALE (T:2.09MM)				1	1	UR UR
	6CB–45567–40	SHIM (T:2.12MM) CALE (T:2.12MM)				1	1	UR UR
	6CB–45567–50	SHIM (T:2.15MM) CALE (T:2.15MM)				1	1	UR UR
51	6CF–45611–01	SHAFT, PROPELLER ARBRE, HELICE				1	1	
52	6CB–45634–00	SLIDE, SHIFT CONTRE-POUSSOIR				1	1	
53	90501–10M77	SPRING, COMPRESSION RESSORT, COMPRESSION				1	1	
54	93501–04011	BALL BILLE				2	2	
55	6H1–45668–00	SHAFT, FREE 1 AXE 1				1	1	
56	61A–45635–00	PLUNGER, SHIFT POUSSOIR D'EMBRAYAGE				2	2	
57	90201–02M00	WASHER, PLATE RONDELLE, PLATE				1	1	
58	90183–02M03	NUT, SPRING ECROU, RESSORT				2	2	
59	90250–08M07	PIN, STRAIGHT GOUPILLE, DROITE				1	1	
60	6CE–45631–00	CLUTCH, DOG CRABOT				1	1	
61	6E5–45633–01	RING, CROSS PIN JONC, GOUPILLE CRABOT				1	1	
62	6CF–45332–01–CA	HOUSING, BEARING FLASQUE, ROULEMENT				1	1	
63	93332–00048	BEARING ROULEMENT				1	1	
64	6CF–45576–00	WASHER, THRUST 2 RONDELLE DE CALAGE 2				1	1	

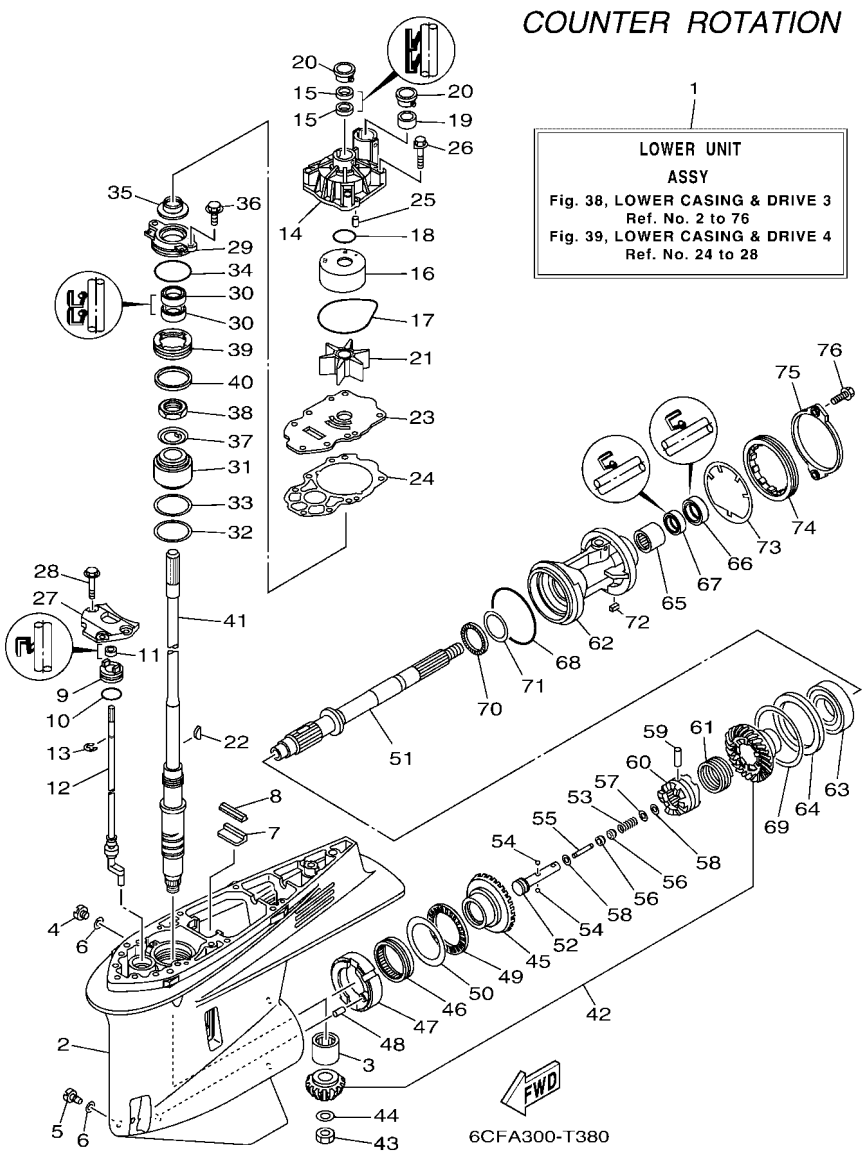

FIG. 38 LOWER CASING & DRIVE 3 — BOITIER D'HELICE TRANSMISSION3

REF. NO.	PART NO. N° PIECES	DESCRIPTION DESCRIPTION	ET	ET1	ET2	LET	LET1	REMARKS REMARQUES
65	93315–43061	BEARING ROULEMENT				1	1	
66	93101–30030	OIL SEAL JOINT SPY				1	1	
67	93101–30019	OIL SEAL JOINT SPY				1	1	
68	93211–02001	O-RING JOINT TORIQUE				1	1	
69	6CB–45577–00	SHIM (T:0.10MM) CALE (T:0.10MM)				1	1	UR UR
	6CB–45577–10	SHIM (T:0.12MM) CALE (T:0.12MM)				1	1	UR UR
	6CB–45577–20	SHIM (T:0.15MM) CALE (T:0.15MM)				1	1	UR UR
	6CB–45577–30	SHIM (T:0.18MM) CALE (T:0.18MM)				1	1	UR UR
	6CB–45577–40	SHIM (T:0.30MM) CALE (T:0.30MM)				1	1	UR UR
	6CB–45577–50	SHIM (T:0.40MM) CALE (T:0.40MM)				1	1	UR UR
	6CB–45577–60	SHIM (T:0.50MM) CALE (T:0.50MM)				1	1	UR UR
70	93341–440U5	BEARING CERVEAUX DE DIRECTION				1	1	
71	6K1–45578–01	SHIM (T:0.10MM) CALE (T:0.10MM)				1	1	UR UR
	6K1–45578–10	SHIM (T:0.12MM) CALE (T:0.12MM)				1	1	UR UR
	6K1–45578–20	SHIM (T:0.15MM) CALE (T:0.15MM)				1	1	UR UR
	6K1–45578–30	SHIM (T:0.18MM) CALE (T:0.18MM)				1	1	UR UR
	6K1–45578–40	SHIM (T:0.30MM) CALE (T:0.30MM)				1	1	UR UR
	6K1–45578–50	SHIM (T:0.40MM) CALE (T:0.40MM)				1	1	UR UR
	6K1–45578–60	SHIM (T:0.50MM) CALE (T:0.50MM)				1	1	UR UR
72	90282–05008	KEY, STRAIGHT CLAVETTE, DROITE				1	1	
73	6CB–45383–00	WASHER, CLAW FREIN D'ECROU				1	1	
74	6CB–45384–00	NUT ECROU				1	1	
75	6CE–45361–10	CAP, LOWER CASING COUVERCLE, BOITIER D'HELICE				1	1	
76	90105–08M61	BOLT, FLANGE BOULON, A COLLERETTE				2	2	

FIG. 39 LOWER CASING & DRIVE 4 — BOITIER D'HELICE TRANSMISSION4

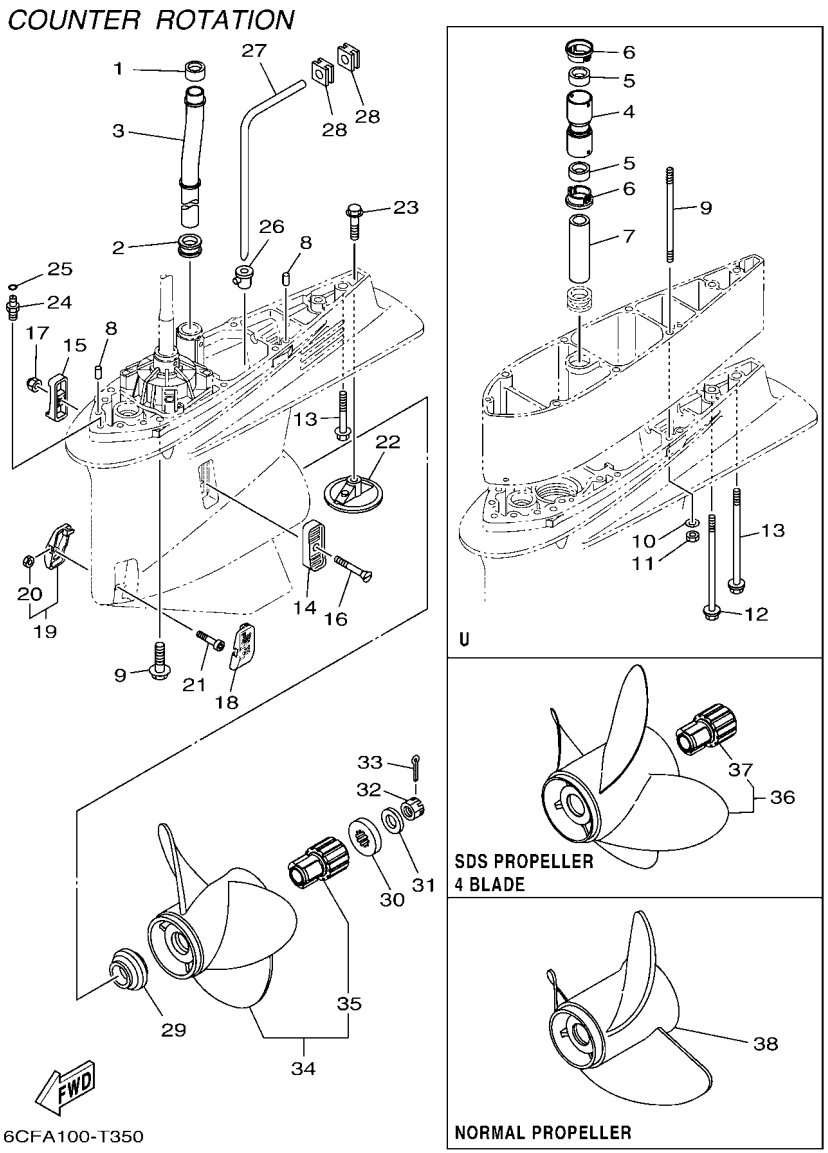

REF. NO.	PART NO. N° PIECES	DESCRIPTION DESCRIPTION	ET	ET1	ET2	LET	LET1	REMARKS REMARQUES
1	6AW–44365–00	DAMPER, WATER SEAL 1 JOINT, TUBE D'EAU 1				1	1	
2	6AW–44366–00	DAMPER, WATER SEAL 2 JOINT, TUBE D'EAU 2				1	1	
3	6CE–44361–00	TUBE, WATER 1 TUBE D'EAU 1				1	1	
4	6CE–44362–00	TUBE, WATER 2 TUBE D'EAU 2				1	1	U(30.3") U(30.3")
5	6AW–44365–00	DAMPER, WATER SEAL 1 JOINT, TUBE D'EAU 1				2	2	U(30.3") U(30.3")
6	6AW–44312–00	COVER, WATER PUMP HOUSING COUVERCLE				2	2	U(30.3") U(30.3")
7	6AW–44363–00	TUBE, WATER 3 TUBE D'EAU 3				1	1	U(30.3") U(30.3")
8	93608–16M16	PIN, DOWEL AXE				2	2	
9	90119–10038	BOLT, WITH WASHER BOULON, AVEC RONDELLE				7	7	X(25.3") X(25.3")
	90116–10041	BOLT, STUD GOUJON				6	6	U(30.3") U(30.3")
10	90201–10048	WASHER, PLATE RONDELLE, PLATE				6	6	U(30.3") U(30.3")
11	90170–10009	NUT ECROU				6	6	U(30.3") U(30.3")
12	90119–10009	BOLT, WITH WASHER BOULON, AVEC RONDELLE				1	1	U(30.3") U(30.3")
13	97E75–10570	BOLT, HEXAGON W/W DEEP RECESS VIS HEXAGONAL AVC RONDELLE				1	1	X(25.3") X(25.3")
	90119–10008	BOLT, WITH WASHER BOULON, AVEC RONDELLE				1	1	U(30.3") U(30.3")
14	6P2–45214–00	COVER, WATER INLET 1 GRILLE, ENTREE D'EAU 1				1	1	
15	6P2–45215–00	COVER, WATER INLET 2 GRILLE, ENTREE D'EAU 2				1	1	
16	90152–05M08	SCREW, COUNTERSUNK VIS, TETE NOYEE				1	1	
17	90185–05002	NUT, NYLON ECROU,AUTO-BLOQUANT				1	1	
18	6CE–45224–00	COVER, WATER INLET 3 GRILLE, ENTREE D'EAU 3				1	1	
19	6CE–45225–00	COVER, WATER INLET 4 GRILLE, ENTREE D'EAU 4				1	1	
20	90185–05002	.NUT, NYLON .ECROU,AUTO-BLOQUANT				1	1	
21	90110–05039	BOLT, HEXAGON SOCKET HEAD BOULON, TETE HEXAGONALE CREUSE				1	1	
22	6CE–45373–00	ANODE ANODE				1	1	
23	90105–10M00	BOLT, FLANGE BOULON, A COLLERETTE				1	1	
24	63P–45378–00	NIPPLE, HOSE RACCORD, TUYAU				1	1	
25	93210–07003	O-RING JOINT TORIQUE				1	1	

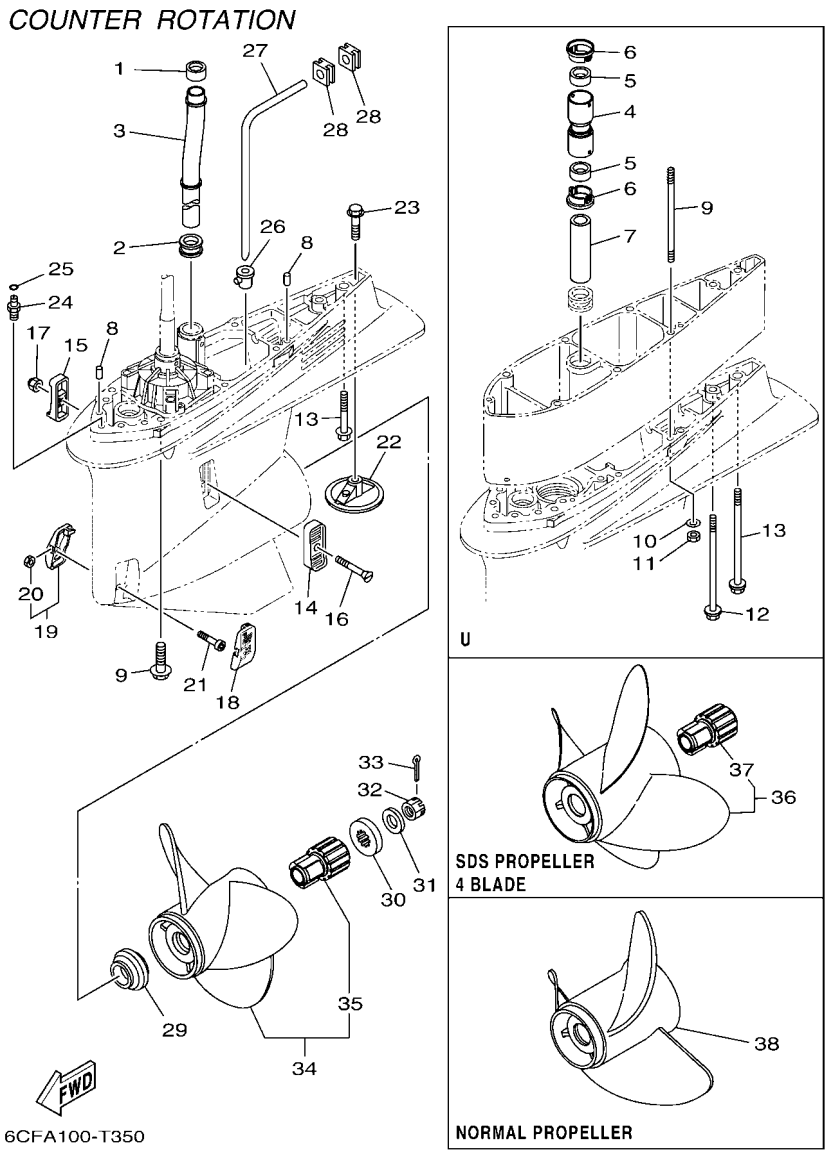

FIG. 39 LOWER CASING & DRIVE 4 — BOITIER D'HELICE TRANSMISSION4

REF. NO.	PART NO. N° PIECES	DESCRIPTION DESCRIPTION	ET	ET1	ET2	LET	LET1	REMARKS REMARQUES
26	6D0–44367–00	DAMPER, WATER SEAL 3 JOINT TUBE D'EAU 3				1	1	
27	6D0–44362–01	TUBE, WATER 2 TUBE D'EAU 2				1	1	
28	6D0–44366–00	DAMPER, WATER SEAL 2 JOINT, TUBE D'EAU 2				2	2	
29	69J–45987–00	SPACER 1 ENTRETOISE 1				1	1	
30	688–45997–01	SPACER 2 ENTRETOISE 2				1	1	
31	92990–18200	WASHER RONDELLE, PLATE				1	1	
32	90171–18M04	NUT, CASTLE ECROU, CRENELE				1	1	
33	91490–40030	PIN. COTTER GOUPILLE				1	1	
34	6CF–45930–20	PROPELLER (3X15-3/4"X13"-TL) HELICE (3X15-3/4"X13"-TL)				1	1	UR SDS 3 BLADE UR SDS 3 BLADE
	6CF–45976–20	PROPELLER (3X15-3/4"X15"-TL) HELICE (3X15-3/4"X15"-TL)				1	1	UR SDS 3 BLADE UR SDS 3 BLADE
	6CF–45978–20	PROPELLER (3X15-1/2"X17"-TL) HELICE (3X15-1/2"X17"-TL)				1	1	UR SDS 3 BLADE UR SDS 3 BLADE
	6CF–45970–20	PROPELLER (3X15-1/4"X19"-TL) HELICE (3X15-1/4"X19"-TL)				1	1	UR SDS 3 BLADE UR SDS 3 BLADE
	6CF–45972–20	PROPELLER (3X15"X21"-TL) HELICE (3X15"X21"-TL)				1	1	UR SDS 3 BLADE UR SDS 3 BLADE
	6CF–45974–20	PROPELLER (3X14-3/4"X23"-TL) HELICE (3X14-3/4"X23"-TL)				1	1	UR SDS 3 BLADE UR SDS 3 BLADE
35	6CE–45C81–10	.DAMPER RUBBER, PROPELLER 1 .AMORTISSEUR HELICE 1				1	1	
36	6CF–45B70–20	PROPELLER (4X15"X21"-TL) HELICE (4X15"X21"-TL)				1	1	UR SDS 4 BLADE UR SDS 4 BLADE
	6CF–45B72–20	PROPELLER (4X15"X22"-TL) HELICE (4X15"X22"-TL)				1	1	UR SDS 4 BLADE UR SDS 4 BLADE
	6CF–45B74–20	PROPELLER (4X15"X23"-TL) HELICE (4X15"X23"-TL)				1	1	UR SDS 4 BLADE UR SDS 4 BLADE
37	6CE–45C81–10	.DAMPER RUBBER, PROPELLER 1 .AMORTISSEUR HELICE 1				1	1	
38	6D1–45970–10	PROPELLER (3X15-1/4"X19"-TL) HELICE (3X15-1/4"X19"-TL)				1	1	AP NORMAL PROP. AP NORMAL PROP.

FIG. 40 STEERING GUIDE ATTACHMENT 1 — DIRECTION GUIDE ACCESSOIRE 1

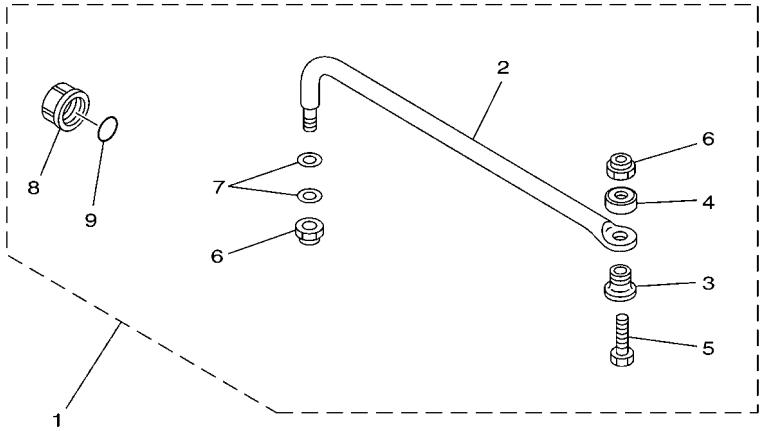

67H0100-9290

REF. NO.	PART NO. N° PIECES	DESCRIPTION DESCRIPTION	ET	ET1	ET2	LET	LET1	REMARKS REMARQUES
1	6E5–61350–02	STEERING GUIDE ATTACHMENT KIT FIXATIONS DE DIRECTION	1	1	1			AP AP
2	6E5–61351–01	.ROD, STEERING LINK .RENVOI DE DIRECTION	1	1	1			
3	90387–10M61	.COLLAR .COLLERETTE	1	1	1			
4	90560–12M01	.SPACER .ENTRETOISE	1	1	1			
5	6E5–61355–00	.BOLT .BOULON	1	1	1			
6	90185–09M01	.NUT, SELF-LOCKING .ECROU,AUTO-BLOQUANT	2	2	2			
7	90201–10M20	.WASHER, PLATE .RONDELLE, PLATE	2	2	2			
8	6E5–43145–01	.CAP, CLAMP BRACKET .CAPUCHON, PRESSE	1	1	1			
9	93210–16275	.O-RING .JOINT TORIQUE	1	1	1			

FIG. 41 STEERING GUIDE ATTACHMENT 2 DIRECTION GUIDE ACCESSOIRE 2

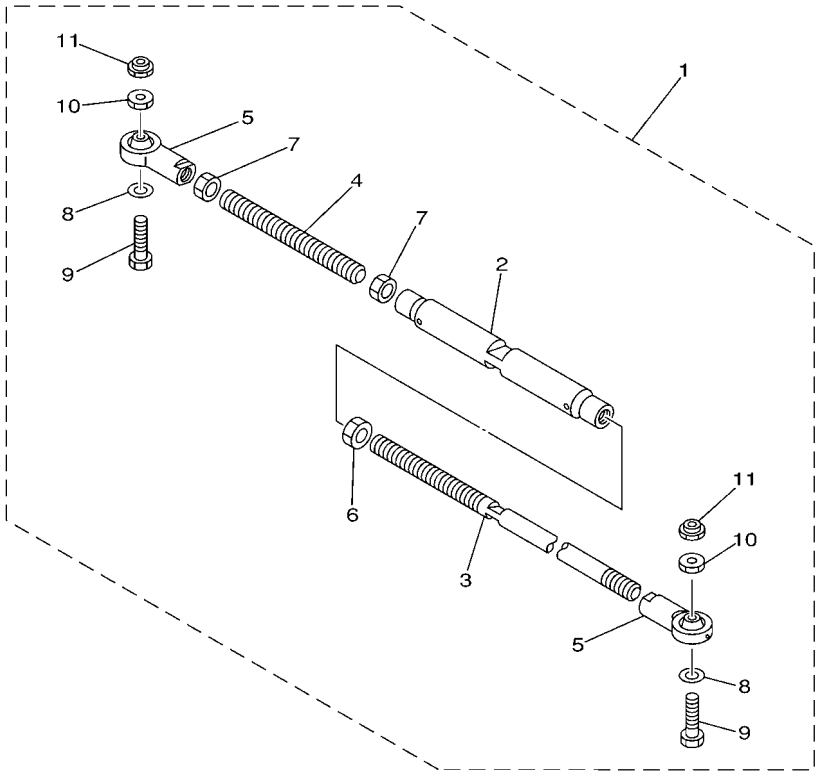

67H0100-0300

REF. NO.	PART NO. N° PIECES	DESCRIPTION DESCRIPTION	ET	ET1	ET2	LET	LET1	REMARKS REMARQUES
1	6E5–61301–01	TWIN KIT (L:600-800MM) JUMELE KIT (L:600-800MM)				1	1	AP AP
2	6E5–61313–00	.ADJUSTER .TENDEUR				1	1	
3	6E5–61311–11	.TIE BAR .BARRE D'ACCOUPLEMENT				1	1	
4	6E5–61315–00	.TIE BAR .BARRE D'ACCOUPLEMENT				1	1	
5	6E5–61303–01	.STEERING AXLE COMP. .AXLE COMP.				2	2	
6	90170–14M06	.NUT .ECROU				1	1	
7	95380–14700	.NUT .ECROU				2	2	
8	90201–10M76	.WASHER, PLATE .RONDELLE, PLATE				2	2	
9	90101–09M70	.BOLT .BOULON				2	2	
10	90170–09M05	.NUT .ECROU				2	2	
11	90185–09M01	.NUT, SELF-LOCKING .ECROU,AUTO-BLOQUANT				2	2	

FIG. 42 OPTIONAL PARTS 1 — PIECES OPTIONNELLES 1

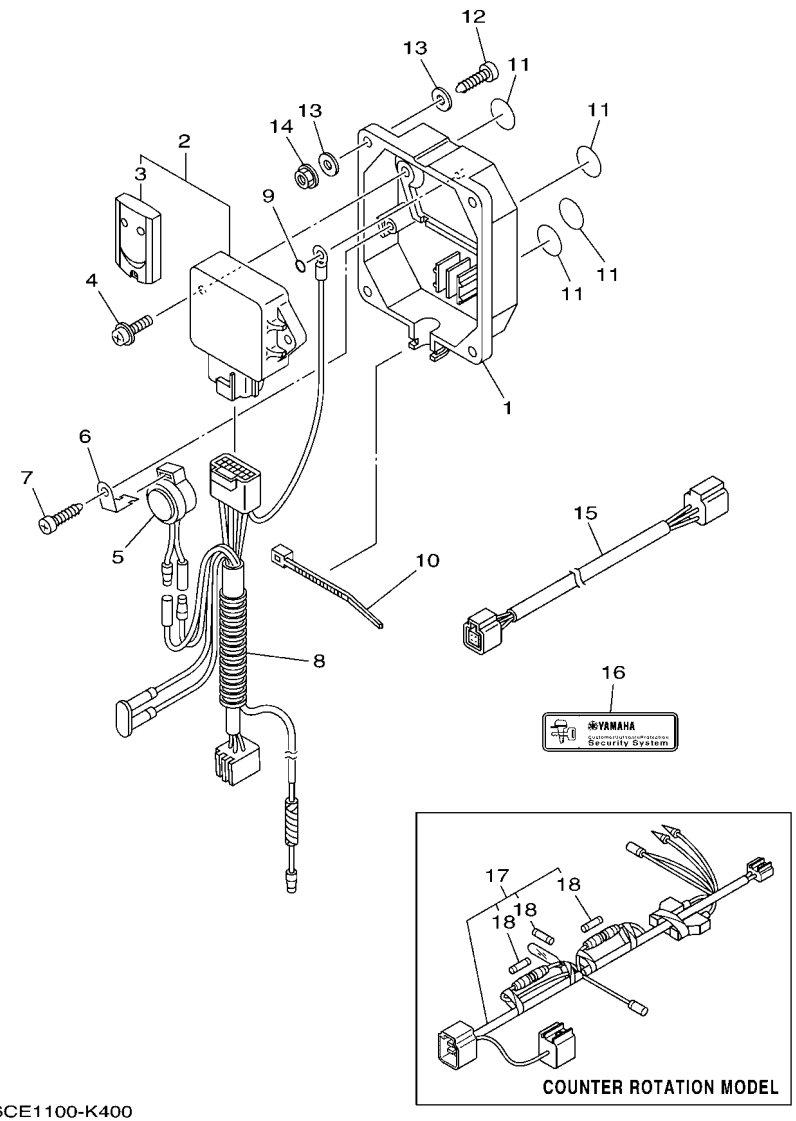

6CE1100-K400

REF. NO.	PART NO. N° PIECES	DESCRIPTION DESCRIPTION	ET	ET1	ET2	LET	LET1	REMARKS REMARQUES
1	6Y8–86267–00	CASE COMPLETE 1 CARTER (ENS.) 1	1	1	1			
2	6Y8–86260–03	REMOTE CONTROL UNIT ASSY UNITE DE TELECOMMANDE (ENS.)	1	1	1			
3	6AA–86261–01	.XMTR. COMP. .XMTR. COMP.	2	2	2			
4	97980–06216	SCREW, WITH WASHER VIS, AVEC RONDELLE	2	2	2			
5	6X4–83383–00	BUZZER RONFLEUR	1	1	1			
6	6X4–83386–00	STAY, BUZZER SUPPOR, RONFLEUR	1	1	1			
7	97780–60620	SCREW, TAPPING VIS, TETE BOMBEE	1	1	1			
8	6Y8–82509–10	WIRE, SUB LEAD FIL, SECONDAIRE	1	1	1			
9	93210–04279	O-RING JOINT TORIQUE	1	1	1			
10	90465–11M10	CLAMP BRIDE	1	1	1			
11	6Y8–8454G–00	PATCH 1 TAMPON 1	4	4	4			
12	90167–06M00	SCREW, TAPPING VIS, TETE FRAISEE	4	4	4			UR UR
	97880–06035	SCREW, PAN HEAD VIS, TETE TRONCONIQUE	4	4	4			UR UR
13	90201–06M30	WASHER, PLATE RONDELLE, PLATE	8	8	8			
14	95780–06300	NUT, FLANGE ECROU	4	4	4			
15	6Y8–82521–11	2FT PIGTAIL BUS FAISCEAU (L: 2FT.)	1	1	1			
16	6Y8–48277–00	STICKER 1 ETIQUETTE 1	4	4	4			
17	6Y8–81315–02	LEAD WIRE ASSY FIL				1	1	AP AP
18	6TA–82151–01	.FUSE(5A) .FUSIBLE (5A)				3	3	

FIG. 43 OPTIONAL PARTS 2 — PIECES OPTIONNELLES 2

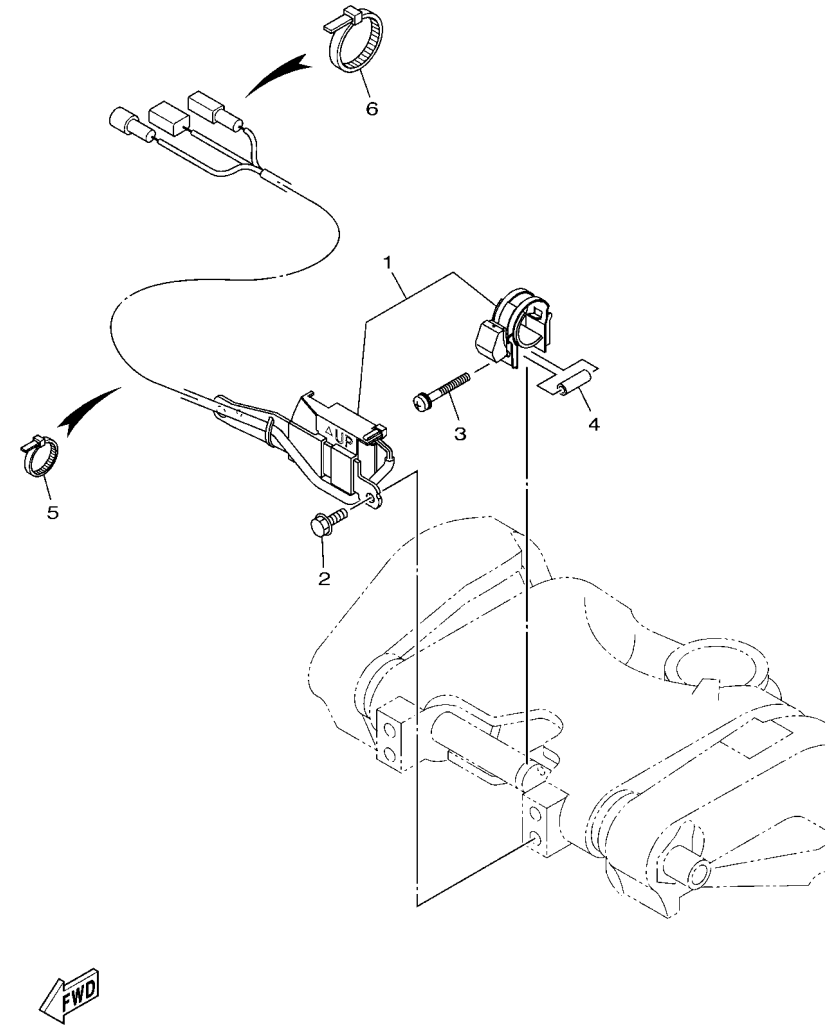

6CLB100-U390

REF. NO.	PART NO. N° PIECES	DESCRIPTION DESCRIPTION	ET	ET1	ET2	LET	LET1	REMARKS REMARQUES
1	6CE–825E0–01	TILT LIMIT SWITCH ASSY COMMUTATEUR, LIMIT INCLINAISON	1	1	1	1	1	
2	97E95–06516	BOLT, HEXAGON W/W DEEP RECESS VIS HEXAGONAL AVC RONDELLE	2	2	2	2	2	
3	90159–05059	SCREW, WITH WASHER VIS, AVEC RONDELLE	1	1	1	1	1	
4	90387–05004	COLLAR COLLERETTE	1	1	1	1	1	
5	90465–11M10	CLAMP BRIDE	9	9	9	9	9	
6	90465–13M18	CLAMP BRIDE	1	1	1	1	1	

FIG. 44 REPAIR KIT 1 — KITS DE REPARATION 1

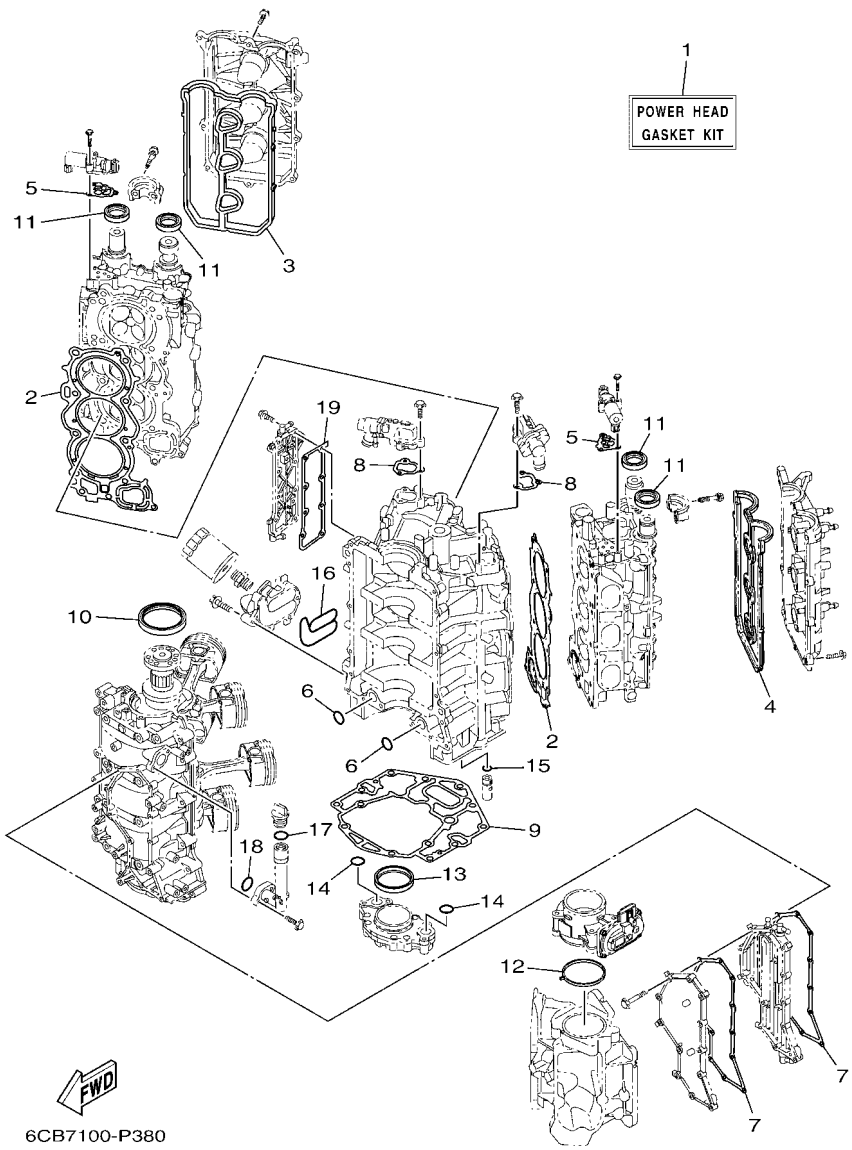

REF. NO.	PART NO. N° PIECES	DESCRIPTION DESCRIPTION	ET	ET1	ET2	LET	LET1	REMARKS REMARQUES
1	6CB–W0001–03	POWER HEAD GASKET KIT POCHETTE DE JINTS TETE MOTRICE	1	1	1	1	1	
2	6CB–11181–00	.GASKET, CYLINDER HEAD 1 .JOINT, DE CULASSE 1	2	2	2	2	2	
3	6CB–11193–00	.GASKET, HEAD COVER 1 .JOINT, COUVERCLE DE CULASSE 1	1	1	1	1	1	
4	6CB–11194–00	.GASKET, HEAD COVER 2 .JOINT, COUVERCLE DE CULASSE 2	1	1	1	1	1	
5	6CB–1242F–00	.GASKET, FILTER .JOINT, FILTRE	2	2	2	2	2	
6	93210–26658	.O-RING .JOINT TORIQUE	2	2	2	2	2	
7	6CB–15451–01	.GASKET, CRANKCASE COVER 1 .JOINT, COUVERCLE DE CARTER 1	2	2	2	2	2	
8	6CB–12427–11	.GASKET, HOUSING COVER 1 .JOINT, COUVERCLE DE CARTER 1	2	2	2	2	2	
9	6CB–11351–00	.GASKET, CYLINDER .JOINT, D'EMBASE	1	1	1	1	1	
10	93102–85008	.OIL SEAL .JOINT SPY	1	1	1	1	1	
11	93102–38008	.OIL SEAL .JOINT SPY	4	4	4	4	4	
12	6CB–13556–00	.GASKET, MANIFOLD .JOINT, TUBULURE	1	1	1	1	1	
13	6CB–11355–00	.SEAL, CYLINDER 1 .JOINT, SPY CYLINDRE	1	1	1	1	1	
14	93210–26658	.O-RING .JOINT TORIQUE	2	2	2	2	2	
15	6CB–13473–00	.O-RING .JOINT TORIQUE	1	1	1	1	1	
16	6CB–13477–00	.GASKET .JOINT	1	1	1	1	1	
17	93210–24M79	.O-RING .JOINT TORIQUE	1	1	1	1	1	
18	93210–27370	.O-RING .JOINT TORIQUE	1	1	1	1	1	
19	6CB–1131B–00	.GASKET, COVER .JOINT, COUVERCLE	1	1	1	1	1	

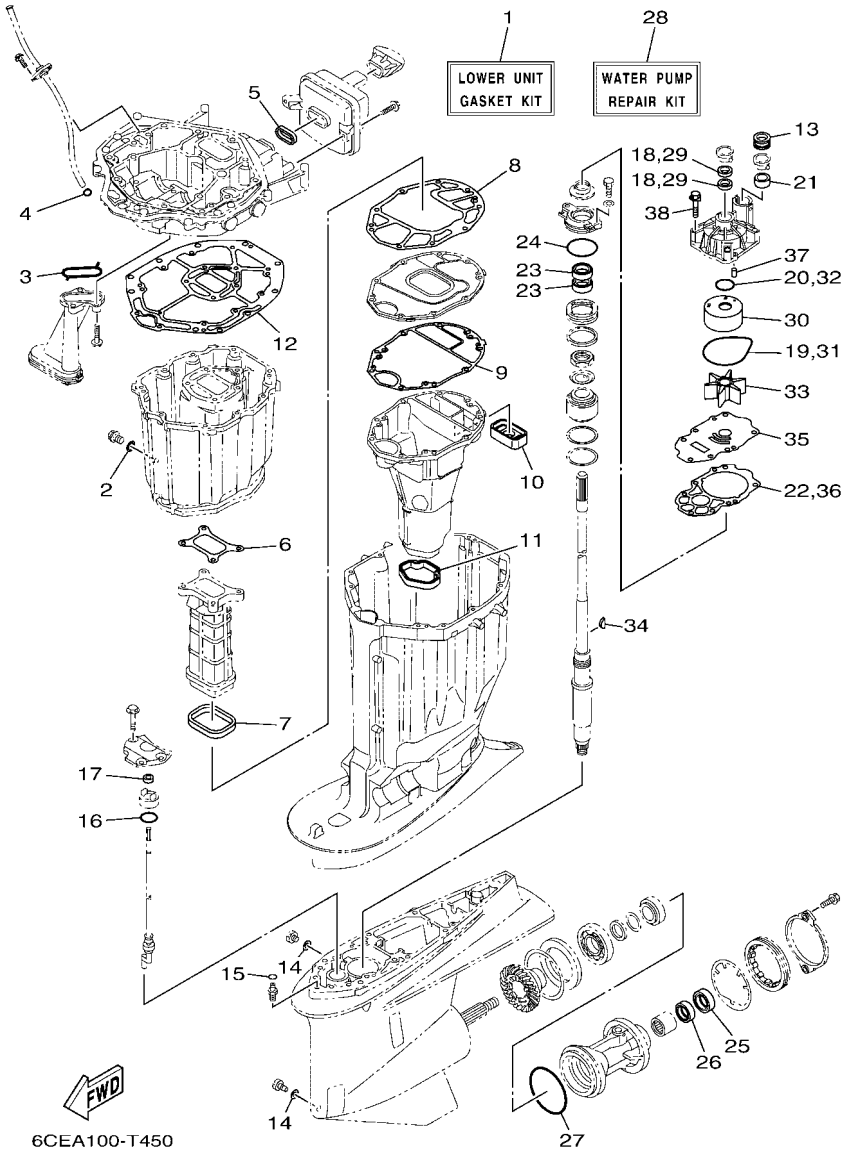

FIG. 45 REPAIR KIT 2 — KITS DE REPARATION 2

REF. NO.	PART NO. N° PIECES	DESCRIPTION DESCRIPTION	ET	ET1	ET2	LET	LET1	REMARKS REMARQUES
1	6CE–W0001–23	LOWER UNIT GASKET KIT POCHETTE DE JOINTS EMBASE	1	1	1	1	1	
2	90430–14M09	.GASKET .JOINT	1	1	1	1	1	
3	6AW–13415–00	.SEAL, OIL STRAINER .JOINT, FILTRE A HUILE	1	1	1	1	1	
4	93210–19MJ3	.O-RING .JOINT TORIQUE	1	1	1	1	1	
5	6CB–14755–00	.GASKET, SILENCER .JOINT, SILENCIEUX	1	1	1	1	1	
6	6CB–41134–00	.GASKET, EXHAUST MANIFOLD .JOINT, PIPE D'ECHAPPEMENT	1	1	1	1	1	
7	6CB–41138–00	.SEAL, EXT. 1 .JOINT DE GROUPE 1	1	1	1	1	1	
8	6CB–41135–00	.GASKET, EXHAUST MANIFOLD .JOINT, PIPE D'ECHAPPEMENT	1	1	1	1	1	
9	6CE–41136–00	.GASKET, EXHAUST MANIFOLD 4 .JOINT, PIPE D'ECHAPPEMENT 4	1	1	1	1	1	
10	6CE–45127–00	.SEAL .JOINT	1	1	1	1	1	
11	6CE–45123–00	.GASKET, MUFFLER .JOINT, POT DE DETENTE	1	1	1	1	1	
12	6CB–45113–01	.GASKET, UPPER CASING .JOINT, TUBE D'ARBRE	1	1	1	1	1	
13	6AW–44366–00	.DAMPER, WATER SEAL 2 .JOINT, TUBE D'EAU 2	1	1	1	1	1	
14	90430–08003	.GASKET .JOINT	2	2	2	2	2	
15	93210–07003	.O-RING .JOINT TORIQUE	1	1	1	1	1	
16	93210–33M49	.O-RING .JOINT TORIQUE	1	1	1	1	1	
17	93106–09014	.OIL SEAL .JOINT SPY	1	1	1	1	1	FOR X(25.3") FOR X(25.3")
	93106–10001	.OIL SEAL .JOINT SPY	1	1	1	1	1	FOR U(30.3") FOR U(30.3")
18	93104–22M07	.OIL SEAL .JOINT SPY	2	2	2	2	2	
19	93210–94003	.O-RING .JOINT TORIQUE	1	1	1	1	1	
20	93210–37160	.O-RING .JOINT TORIQUE	1	1	1	1	1	
21	6AW–44365–00	.DAMPER, WATER SEAL 1 .JOINT, TUBE D'EAU 1	1	1	1	1	1	
22	6CE–44315–00	.GASKET, WATER PUMP .JOINT, POMPE A EAU	1	1	1	1	1	
23	93101–28019	.OIL SEAL .JOINT SPY	2	2	2	2	2	
24	93210–64488	.O-RING .JOINT TORIQUE	1	1	1	1	1	
25	93101–30030	.OIL SEAL .JOINT SPY	1	1	1	1	1	
26	93101–30019	.OIL SEAL .JOINT SPY	1	1	1	1	1	

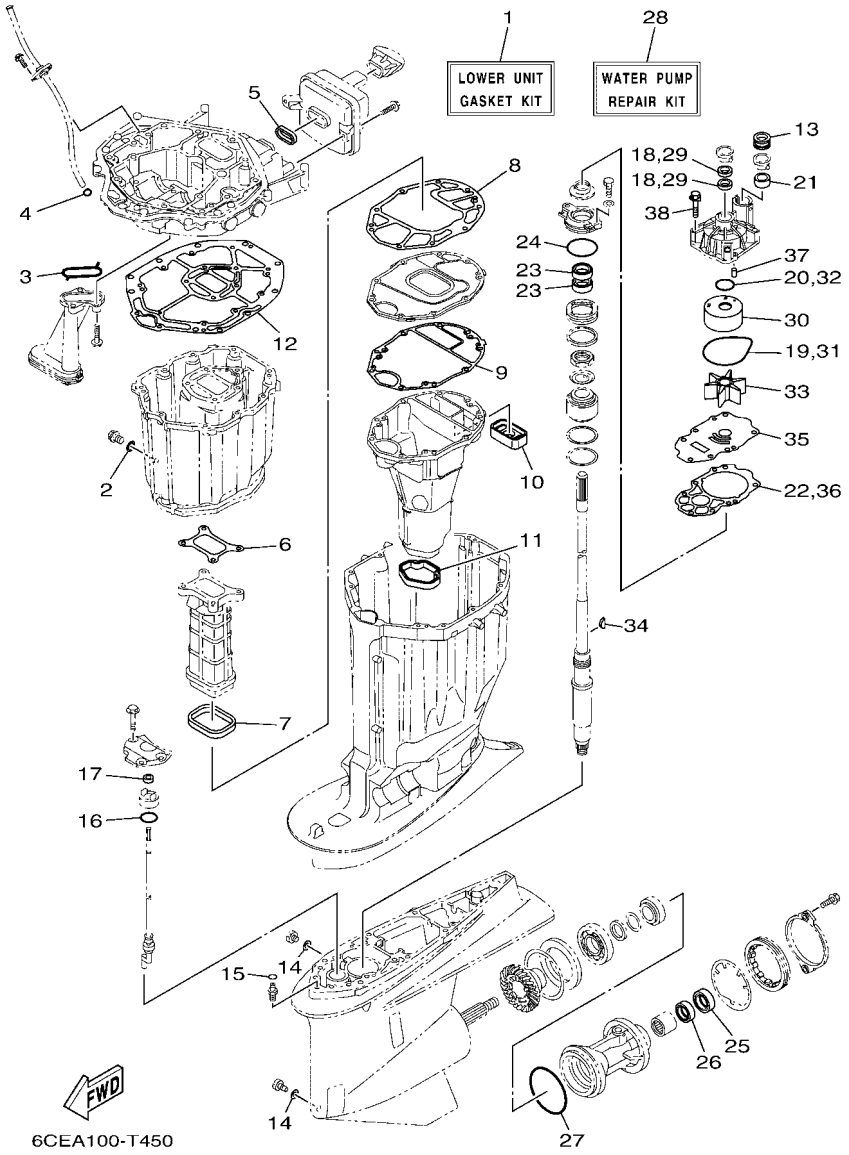

FIG. 45 REPAIR KIT 2 — KITS DE REPARATION 2

REF. NO.	PART NO. N° PIECES	DESCRIPTION DESCRIPTION	ET	ET1	ET2	LET	LET1	REMARKS REMARQUES
27	93211–02001	.O-RING .JOINT TORIQUE	1	1	1	1	1	
28	6CE–W0078–02	WATER PUMP REPAIR KIT KIT DE REPARATION DE LA POMPE	1	1	1	1	1	
29	93104–22M07	.OIL SEAL .JOINT SPY	2	2	2	2	2	
30	6AW–44322–00	.INSERT, CARTRIDGE .CUVETTE	1	1	1	1	1	
31	93210–94003	.O-RING .JOINT TORIQUE	1	1	1	1	1	
32	93210–37160	.O-RING .JOINT TORIQUE	1	1	1	1	1	
33	6CE–44352–00	.IMPELLER .TURBINE	1	1	1	1	1	
34	90280–04002	.KEY, WOODRUFF .CLAVETTE, DEMI-LUNE	1	1	1	1	1	
35	6CE–44323–01	.OUTER PLATE, CARTRIDGE .PLAQUE EXTERIEURE	1	1	1	1	1	
36	6CE–44315–00	.GASKET, WATER PUMP .JOINT, POMPE A EAU	1	1	1	1	1	
37	93606–12019	.PIN, DOWEL .GOUPILLE	2	2	2	2	2	
38	90119–08191	.BOLT, WITH WASHER .BOULON, AVEC RONDELLE	4	4	4	4	4	

NUMERICAL INDEX
INDEX NUMERIQUE

PART NO. N° PIECES	REF. NO.
6CE–11000–03	4 – 1
6CE–11110–12–9S	6 – 2
6CE–11120–12–9S	6 – 12
6S5–11133–10	6 – 3
	6 – 13
6CB–11181–00	6 – 25
	44 – 2
6CB–11191–02	6 – 30
6CB–11192–02	6 – 34
6CB–11193–00	6 – 31
	44 – 3
6CB–11194–00	6 – 35
	44 – 4
67F–11301–00	6 – 19
6CB–1131B–00	4 – 12
	44 – 19
6CE–1131C–00–9S	4 – 9
68T–11325–00	1 – 4
	4 – 32
63P–11325–01	1 – 1
	4 – 10
	4 – 19
67F–11325–01	1 – 7
	6 – 20
63P–11325–11	1 – 16
	34 – 2
67F–11328–00	6 – 21
6AW–1132N–01	1 – 5
	4 – 34
6AW–1132P–00	1 – 3
	4 – 30
6CB–11351–00	4 – 29
	44 – 9
6CB–11355–00	35 – 13
	44 – 13
6CB–1135A–00	7 – 6
6CB–11410–00	5 – 1
6CB–11416–00	5 – 5
6CB–11416–10	5 – 5
6CB–11416–20	5 – 5
6CB–11416–30	5 – 5
6CB–11416–40	5 – 5
6CB–11417–00	5 – 6
6CB–11417–10	5 – 6
6CB–11417–20	5 – 6
6CB–11417–30	5 – 6
6CB–11417–40	5 – 6
6CB–11426–03	5 – 7

PART NO. N° PIECES	REF. NO.
6CB–11427–03	5 – 8
6CB–11478–00	5 – 2
6CB–1149A–00	7 – 10
6CB–11567–00	9 – 17
6CB–11590–02	9 – 28
6CB–11603–00	5 – 12
6CE–11631–02	5 – 11
6CB–11633–00	5 – 13
63P–11654–10	5 – 10
6JD–11656–00	5 – 14
6JD–11656–10	5 – 14
6JD–11656–20	5 – 14
6CB–11998–00	6 – 42
6CB–11999–00	6 – 43
6CB–12111–00	9 – 1
6CB–12113–00	9 – 4
51Y–12119–00	9 – 7
6DA–12121–00	9 – 2
6CB–12171–00	9 – 9
6CB–12172–00	9 – 13
6CB–12181–00	9 – 11
6CB–12182–00	9 – 15
6CE–12411–00	1 – 2
	4 – 21
67F–12412–00	4 – 22
6CE–12413–A0–9S	4 – 24
6CE–12413–B0–9S	4 – 23
6CB–12422–10–9S	4 – 25
6CB–12427–11	4 – 26
	44 – 8
6CB–1242F–00	7 – 2
	44 – 5
6CB–1243E–00	8 – 15
6CE–1244G–00	8 – 12
6CE–1244H–00	8 – 14
6CE–12481–10	19 – 24
6CE–12482–10	11 – 8
6CE–12483–00	19 – 18
6CB–12483–01	11 – 26
6CB–12484–00	11 – 10
6CE–12485–00	19 – 26
6CE–1248A–00	19 – 16
6AW–12572–00	27 – 18
6CB–12576–10	8 – 3
6CB–12577–00	8 – 8
6R3–12581–00	27 – 19
6AW–12582–00	27 – 20
6R3–12583–00	27 – 21

PART NO. N° PIECES	REF. NO.
6P2–12615–00	9 – 25
6P2–12623–00	9 – 20
	9 – 23
6CB–12645–01	9 – 19
6CB–1264A–01	9 – 22
6P2–12663–00	9 – 21
	9 – 24
6CB–13016–00	1 – 10
	14 – 5
6AW–13119–00	35 – 11
6AW–13132–00	14 – 32
6CB–13161–10	13 – 1
6CB–13171–10	13 – 5
6CB–13300–00	35 – 9
6CB–13329–00	35 – 10
6CB–13411–00	35 – 6
6AW–13415–00	35 – 7
	45 – 3
6CE–13437–61	18 – 18
N26–13440–03	1 – 6
	4 – 36
6CE–13446–10–9S	4 – 38
6CB–13473–00	35 – 17
	44 – 15
6CB–13477–00	4 – 39
	44 – 16
6CB–13490–00	35 – 16
6CB–13532–10	11 – 2
6CB–13533–00	11 – 1
6CB–13545–00	11 – 18
6CB–13546–01	11 – 22
6CB–13547–00	11 – 23
6CB–13548–00	11 – 25
6CB–13556–00	12 – 3
	44 – 12
68V–13577–00	15 – 4
6CB–13577–00	13 – 4
	13 – 8
6CB–13593–00	14 – 22
69J–13631–00	35 – 12
6CE–13641–00	10 – 5
6CB–13645–00	10 – 6
6CB–13646–00	10 – 7
6CB–13711–00	12 – 2
63P–13716–00	14 – 21
6CB–13751–10	12 – 1
6AW–13761–00	13 – 2
	13 – 6

PART NO. N° PIECES	REF. NO.
6AW–13781–00	14 – 34
6CB–13782–00	11 – 16
6AW–13784–00	14 – 35
6CB–13898–11	12 – 8
6CB–13898–20	12 – 7
6CB–13906–01	14 – 8
6CB–13907–11	14 – 23
63P–13915–00	1 – 11
	14 – 24
6CB–13971–01	15 – 10
6CB–13972–00	15 – 12
6CB–13974–01	15 – 11
6AW–1410B–00	13 – 3
	13 – 7
69J–14137–00	15 – 3
6CB–14146–00	14 – 10
6P2–14149–00	15 – 2
6CB–14180–12	14 – 1
6CB–14181–01	14 – 15
6CB–14182–02	14 – 2
6P2–14191–00	14 – 16
68V–14216–00	14 – 12
6CB–14216–00	14 – 6
6CB–14239–00	14 – 17
6P2–14386–00	14 – 37
6AW–1441J–00	10 – 11
6CB–14429–01	14 – 19
6CE–14435–00	22 – 32
6CB–14440–01	10 – 9
6CB–1447B–00	14 – 33
6CB–14546–00	14 – 26
6CB–14564–00	14 – 9
63P–14567–00	14 – 36
6CE–14711–01	34 – 20
6CB–14750–A0	34 – 9
6CB–14755–00	34 – 11
	45 – 5
6CB–1475A–00	11 – 27
6CB–1475F–00	11 – 28
6CB–1475G–10	11 – 31
6CB–1475H–00	14 – 13
6CB–1475J–00	14 – 14
6CE–14872–00	19 – 25
	19 – 28
6CB–14984–00	1 – 12
	14 – 31
6CB–14985–00	14 – 25
6EK–14989–00	11 – 30

PART NO. N° PIECES	REF. NO.
6CE–15100–10	4 – 2
6AW–15142–00	6 – 38
6CB–15142–00	7 – 8
6CB–15187–00	4 – 5
6CB–15311–01	35 – 1
6BB–15316–00	34 – 29
6CB–15319–00	4 – 43
6CB–15362–00	35 – 18
6G8–15363–00	4 – 41
6CB–15373–01	10 – 8
6CB–15377–00	35 – 19
6CE–15411–00–9S	4 – 14
6CE–15421–10–9S	4 – 15
6CB–15451–01	4 – 17
	44 – 7
6CB–15481–00	4 – 6
6CB–15512–00	9 – 29
6CB–15544–00	7 – 4
6CB–2134V–00	6 – 40
69J–2134X–00	10 – 16
6E5–21744–00	11 – 24
6GR–23113–00	32 – 84
6CB–2416A–00	11 – 5
69J–24170–00	10 – 14
69J–2419A–01	10 – 15
6CB–24217–00	14 – 7
60E–24300–01	15 – 9
6CB–24313–10	16 – 18
6CB–24314–11	16 – 2
6CB–24315–00	27 – 13
6CB–24317–00	15 – 6
6CB–24323–00	15 – 7
6CB–24324–00	15 – 5
6E5–24351–51	16 – 3
6AW–24360–01	17 – 1
6G8–24376–00	11 – 29
6CE–24376–01	19 – 27
6CE–24377–00	19 – 17
6AW–24377–01	16 – 4
688–24378–00	8 – 2
	11 – 21
	11 – 36
	19 – 30
6CE–24378–00	8 – 13
6E5–24378–00	15 – 8
68V–24379–10	14 – 11
6CB–24410–01	14 – 27
6CB–24452–10	14 – 18

PART NO. N° PIECES	REF. NO.
4SV–24453–00	14 – 38
6CB–24460–00	14 – 4
6CB–24461–00	15 – 1
6P3–24469–00	16 – 10
6CB–24482–00	14 – 20
6CB–24491–00	14 – 30
6CB–24492–00	14 – 28
6CB–24501–01	1 – 9
	14 – 3
6P3–24519–00	16 – 9
6P3–24560–22	16 – 7
6P3–24562–21	16 – 8
6P3–24563–01	1 – 14
	16 – 12
6P3–24564–00	1 – 13
	16 – 11
6CB–24566–00	16 – 13
6CB–24592–00	14 – 29
6CB–24596–01	16 – 20
69J–28100–02	16 – 22
67F–2812A–00	21 – 31
6CE–28199–78–D0	16 – 23
6CE–28199–78–E0	16 – 23
6CE–28199–78–F0	16 – 23
6CE–28199–78–G0	16 – 23
6CE–28199–78–H0	16 – 23
6CE–28199–78–S0	16 – 23
6CE–28199–88–K0	16 – 24
6CE–28199–88–L0	16 – 24
6CE–28199–88–M0	16 – 24
6CE–28199–88–N0	16 – 24
6CE–28199–88–P0	16 – 24
6CE–28199–88–R0	16 – 24
6CB–41132–01	34 – 13
6CB–41134–00	34 – 14
	45 – 6
6CB–41135–00	34 – 17
	45 – 8
6CE–41136–00	34 – 19
	45 – 9
6CE–41137–01	34 – 1
6CB–41138–00	34 – 16
	45 – 7
6CB–42134–00	2 – 13
	3 – 13
6AW–42169–00	27 – 15
6CE–42195–10	29 – 8
6BG–42384–00	27 – 2

PART NO. N° PIECES	REF. NO.
6DA–42384–00	26 – 23
6CE–42510–00–8D	31 – 5
6CE–42510–00–CE	31 – 5
6CE–42610–02	2 – 1
6CE–42610–10	3 – 1
6CE–42610–22–CE	2 – 1
6CB–42615–01	26 – 5
6BG–42617–00	22 – 9
6CB–42617–00	22 – 10
6CE–4261A–00	2 – 2
6CE–4261A–00–CE	2 – 2
6CE–4261A–10	3 – 2
6CB–42628–00	2 – 16
	3 – 16
6CB–42629–00	22 – 11
6CE–42635–00	2 – 3
	3 – 3
6CB–42643–00	27 – 29
6CB–42644–00	27 – 30
6CB–42647–A0	2 – 6
	3 – 6
6CB–42662–00	6 – 44
6AW–42663–00	2 – 12
	3 – 12
6CE–42675–02	2 – 19
6CE–42675–10	3 – 19
6CE–42675–22	2 – 19
6CE–42676–02	2 – 20
6CE–42676–10	3 – 20
6CE–42676–22	2 – 20
6CE–42677–01	2 – 21
6CE–42677–10	3 – 21
6CE–42677–22	2 – 21
6CE–42678–02	2 – 18
6CE–42678–10	3 – 18
6CE–42678–22	2 – 18
6CE–42681–03	2 – 22
6CE–42681–10	3 – 22
6CE–42681–22	2 – 22
6CE–42682–03	2 – 23
6CE–42682–10	3 – 23
6CE–42682–22	2 – 23
6AW–42697–10	2 – 17
	3 – 17
6CB–42710–00–8D	26 – 1
6CB–42710–00–CE	26 – 1
6CB–42716–00	26 – 6
69J–42717–00	27 – 11

PART NO. N° PIECES	REF. NO.
6DA–42717–00	26 – 22
69J–42723–01	22 – 26
6E5–42724–00	34 – 8
6CE–42725–02	26 – 2
6H4–42726–00	27 – 4
6H1–42726–21	27 – 1
61A–42727–00	27 – 5
64G–42727–00	27 – 6
6CE–42733–00	27 – 7
6CE–42734–00	27 – 8
6CE–42741–01–8D	28 – 1
6CE–42741–01–CE	28 – 1
6CB–42743–00	26 – 26
6CB–42744–00	27 – 35
6H4–42748–00	26 – 24
68F–42753–00	26 – 32
6CB–42756–00	26 – 30
69M–42758–01	19 – 5
	21 – 10
6CB–42761–00	26 – 3
6CB–42766–00	26 – 28
6CB–42769–01	34 – 12
6CE–42771–01–8D	28 – 2
6CE–42771–01–CE	28 – 2
6CE–42774–A0	28 – 15
6AW–42785–00	27 – 17
6CE–42786–01	27 – 9
6CE–42787–01	27 – 10
6EE–42794–40	26 – 34
6EE–42794–50	26 – 35
6CB–42815–02–8D	26 – 7
6CB–42815–02–CE	26 – 7
6CB–42816–02–8D	26 – 8
6CB–42816–02–CE	26 – 8
6CB–42817–02–8D	26 – 9
6CB–42817–02–CE	26 – 9
6CB–42818–00	26 – 13
6CB–42819–00	26 – 14
69J–43111–11–8D	30 – 1
69J–43111–11–CE	30 – 1
69J–43112–02–8D	30 – 12
69J–43112–02–CE	30 – 12
6E5–43126–10	30 – 39
6R3–43131–30	30 – 18
61A–43132–00	30 – 10
61A–43133–00	30 – 13
66T–43144–00	26 – 17
6G5–43144–00	30 – 29

PART NO. N° PIECES	REF. NO.
6E5–43145–01	40 – 8
6G5–43148–00	30 – 34
61A–43181–01	30 – 31
6G5–43185–02	30 – 32
61A–43311–22–8D	30 – 26
61A–43311–22–CE	30 – 26
6AW–43376–00	31 – 3
69J–43800–11–8D	32 – 1
69J–43800–11–CE	32 – 1
69J–43801–01	32 – 4
6GR–43804–00	33 – 3
6GR–43805–00	33 – 2
6GR–4380F–00	33 – 6
6CE–4380P–00	32 – 12
6CE–43810–01	32 – 3
61A–43811–00	32 – 9
63P–43812–20	32 – 76
61A–43813–02	32 – 18
6H1–43814–11	32 – 17
69J–43816–00	32 – 62
69J–43817–00	32 – 67
61A–43818–00	32 – 25
69J–4381C–00	32 – 30
	32 – 35
69J–4381J–00	32 – 63
69J–43820–01	32 – 78
61A–43821–02	32 – 77
69J–43828–00	32 – 70
6H1–43829–00	32 – 73
69J–4382E–00	32 – 11
69J–43830–01	32 – 33
69J–43831–00	32 – 65
69J–43833–02	32 – 21
69J–43835–10	32 – 19
6CE–43840–01	32 – 2
6CJ–43841–00	32 – 42
6CJ–43843–00	32 – 53
6H1–43844–10	32 – 55
63P–43844–20	32 – 50
69J–43845–00	32 – 28
69A–4384F–00	32 – 39
69J–4384G–00	32 – 58
6H1–4384G–11	32 – 54
69J–4384H–00	32 – 10
61A–4384H–10	32 – 81
6CJ–4384M–00	32 – 38
69J–43851–00	32 – 49
69J–43853–00	32 – 45

PART NO. N° PIECES	REF. NO.
69J–43854–00	32 – 57
69J–43855–00	32 – 52
6H1–43856–10	32 – 56
61A–43861–00	32 – 14
	32 – 16
	32 – 74
63P–43861–20	32 – 6
6D8–43863–00	32 – 27
	32 – 75
61A–43864–00	32 – 80
6GR–43864–00	33 – 12
60V–4386A–00	32 – 44
6GR–4386K–00	33 – 7
61A–43871–00	32 – 15
69J–43871–00	32 – 61
6H1–43872–00	32 – 7
61A–43874–00	32 – 79
6H1–43875–00	32 – 29
61A–43875–10	32 – 82
61A–43876–01	32 – 26
67C–43879–10	33 – 9
69J–43880–11	33 – 1
69J–43881–11	33 – 10
6GR–43882–01	33 – 11
6H1–43883–00	32 – 43
69J–43888–00	32 – 71
69J–4388E–01	32 – 23
69J–4388F–00	32 – 68
69J–4388H–00	32 – 66
69J–4388J–00	32 – 20
6GR–43892–00	33 – 4
6CJ–43893–00	32 – 46
69J–43894–00	32 – 41
69J–43899–01	32 – 31
61A–4389H–01	32 – 8
69J–4389J–00	32 – 32
	32 – 36
6CE–44117–10	29 – 14
6CE–44118–A0	29 – 18
6CE–44120–21	29 – 20
6CE–44121–10	29 – 16
6CE–44122–20	29 – 9
6CE–44142–20	29 – 7
6CE–44150–00	36 – 12
6CF–44150–00	38 – 12
6CE–44150–10	36 – 12
6CF–44150–10	38 – 12
6CE–44194–00	31 – 30

PART NO. N° PIECES	REF. NO.
6CE–44311–01	36 – 14
	38 – 14
6AW–44312–00	36 – 20
	37 – 6
	38 – 20
	39 – 6
6CB–44312–00	36 – 27
	38 – 27
6CE–44315–00	36 – 24
	38 – 24
	45 – 22
	45 – 36
6AW–44322–00	36 – 16
	38 – 16
	45 – 30
6CE–44323–01	36 – 23
	38 – 23
	45 – 35
6CE–44352–00	36 – 21
	38 – 21
	45 – 33
6CE–44361–00	37 – 3
	39 – 3
6CE–44362–00	37 – 4
	39 – 4
6D0–44362–01	37 – 27
	39 – 27
6AW–44363–00	37 – 7
	39 – 7
6AW–44365–00	36 – 19
	37 – 1
	37 – 5
	38 – 19
	39 – 1
	39 – 5
	45 – 21
6AW–44366–00	34 – 45
	37 – 2
	39 – 2
	45 – 13
6D0–44366–00	37 – 28
	39 – 28
6D0–44367–00	37 – 26
	39 – 26
6P2–44391–00	26 – 25
6CE–44511–00	31 – 32
6CE–44514–00	31 – 22
6CE–44526–00	31 – 23

PART NO. N° PIECES	REF. NO.
6G5–44526–00	30 – 4
6CE–44532–00	31 – 25
6CE–44533–00	31 – 31
6CE–44536–00	31 – 24
6CE–44551–00–CA	31 – 10
6CE–44552–00–CA	31 – 20
6CE–44555–00	31 – 14
6CE–44574–00	31 – 12
6CE–44575–00	31 – 13
6CE–45111–01–8D	34 – 25
6CB–45113–01	34 – 26
	45 – 12
6CE–45123–00	34 – 24
	45 – 11
6CE–45127–00	34 – 23
	45 – 10
6BB–45152–01	34 – 30
61A–45155–00	34 – 34
6CE–45181–01	34 – 18
6CE–45211–10–8D	34 – 44
6P2–45214–00	37 – 14
	39 – 14
6P2–45215–00	37 – 15
	39 – 15
6CE–45224–00	37 – 18
	39 – 18
6CE–45225–00	37 – 19
	39 – 19
6CE–45244–00	36 – 39
	38 – 39
6G5–45251–02	1 – 15
	30 – 3
6CE–45300–04–8D	36 – 1
6CF–45300–04–8D	38 – 1
6CE–45300–14–8D	36 – 1
6CF–45300–14–8D	38 – 1
6CE–45301–00–8D	36 – 2
	38 – 2
69J–45318–01	34 – 32
6CE–45321–10	36 – 9
	38 – 9
6CE–45321–20	36 – 9
	38 – 9
6CE–45332–00–CA	36 – 64
6CF–45332–01–CA	38 – 62
6CE–45335–00–9S	36 – 29
	38 – 29
688–45341–10	36 – 5

NUMERICAL INDEX
INDEX NUMERIQUE

PART NO. N° PIECES	REF. NO.
688–45341–10	38 – 5
6AW–45344–00	36 – 35
	38 – 35
6CE–45361–10	36 – 79
	38 – 75
6CE–45373–00	1 – 19
	37 – 22
	39 – 22
6CE–45375–00	36 – 8
	38 – 8
663–45376–00	36 – 7
	38 – 7
63P–45378–00	34 – 47
	37 – 24
	39 – 24
63P–45379–00	34 – 42
6CB–45383–00	36 – 77
	38 – 73
6CB–45384–00	36 – 78
	38 – 74
6CE–45501–00	36 – 41
	38 – 41
6CE–45501–10	36 – 41
	38 – 41
6CE–45539–00	36 – 40
	38 – 40
6CE–45550–00	36 – 42
6CF–45550–00	38 – 42
6CF–45560–01	38 – 45
676–45567–00	36 – 75
6CB–45567–00	36 – 52
	38 – 50
676–45567–10	36 – 75
6CB–45567–10	36 – 52
	38 – 50
676–45567–20	36 – 75
6CB–45567–20	36 – 52
	38 – 50
676–45567–30	36 – 75
6CB–45567–30	36 – 52
	38 – 50
676–45567–40	36 – 75
6CB–45567–40	36 – 52
	38 – 50
676–45567–50	36 – 75
6CB–45567–50	36 – 52
	38 – 50
6CE–45571–00	36 – 66

PART NO. N° PIECES	REF. NO.
6CB–45576–00	36 – 67
6CF–45576–00	38 – 64
6CB–45577–00	36 – 72
	38 – 69
6CB–45577–10	36 – 72
	38 – 69
6CB–45577–20	36 – 72
	38 – 69
6CB–45577–30	36 – 72
	38 – 69
6CB–45577–40	36 – 72
	38 – 69
6CB–45577–50	36 – 72
	38 – 69
6CB–45577–60	36 – 72
	38 – 69
6K1–45578–01	38 – 71
6K1–45578–10	38 – 71
6K1–45578–20	38 – 71
6K1–45578–30	38 – 71
6K1–45578–40	38 – 71
6K1–45578–50	38 – 71
6K1–45578–60	38 – 71
6CE–45587–00	36 – 33
	38 – 33
6CE–45587–10	36 – 33
	38 – 33
6CE–45587–20	36 – 33
	38 – 33
6CE–45587–30	36 – 33
	38 – 33
6CE–45587–40	36 – 33
	38 – 33
6CE–45587–50	36 – 33
	38 – 33
6CE–45587–60	36 – 33
	38 – 33
6CB–45611–00	36 – 53
6CF–45611–01	38 – 51
6CE–45631–00	36 – 62
	38 – 60
6E5–45633–01	36 – 63
	38 – 61
6CB–45634–00	36 – 54
	38 – 52
61A–45635–00	36 – 58
	38 – 56
6H1–45668–00	36 – 57

PART NO. N° PIECES	REF. NO.
6H1–45668–00	38 – 55
6CB–45824–00	36 – 46
	38 – 47
6CE–45930–20	37 – 34
6CF–45930–20	39 – 34
6D0–45970–10	37 – 38
6D1–45970–10	39 – 38
6CE–45970–20	37 – 34
6CF–45970–20	39 – 34
6CE–45972–20	37 – 34
6CF–45972–20	39 – 34
6CE–45974–20	37 – 34
6CF–45974–20	39 – 34
6CE–45976–20	37 – 34
6CF–45976–20	39 – 34
6CE–45978–20	37 – 34
6CF–45978–20	39 – 34
69J–45987–00	37 – 29
	39 – 29
688–45997–01	37 – 30
	39 – 30
6CE–45B70–20	37 – 36
6CF–45B70–20	39 – 36
6CE–45B72–20	37 – 36
6CF–45B72–20	39 – 36
6CE–45B74–20	37 – 36
6CF–45B74–20	39 – 36
6CE–45C81–10	37 – 35
	37 – 37
	39 – 35
	39 – 37
6ML–4820A–00	29 – 1
6Y8–48277–00	42 – 16
6E5–61301–01	41 – 1
6E5–61303–01	41 – 5
6E5–61311–11	41 – 3
6E5–61313–00	41 – 2
6E5–61315–00	41 – 4
6E5–61350–02	40 – 1
6E5–61351–01	40 – 2
6E5–61355–00	40 – 5
6CE–68303–00	29 – 27
6Y8–81315–02	42 – 17
6P2–81336–00	21 – 33
6CE–81337–01	18 – 12
6CE–81410–00	18 – 3
6CB–81443–00	23 – 6
6CB–81639–10	21 – 27

PART NO. N° PIECES	REF. NO.
6CE–81800–01	25 – 1
6CE–81801–01	25 – 5
6CE–81807–00	25 – 8
6CB–81809–00	25 – 14
6CE–81810–00	25 – 3
67F–81813–00	25 – 6
6CE–81820–00	25 – 7
6CE–81821–00	25 – 11
6CB–81822–02	23 – 4
6CB–81823–A0	23 – 8
6CB–81826–00	25 – 22
69J–81828–00	25 – 23
6CE–81830–00	25 – 16
6CB–81832–00	25 – 9
6CB–81836–00	25 – 10
6CE–81839–00	25 – 19
67F–8183R–00	25 – 13
60V–8183T–00	25 – 17
6P2–8183X–00	21 – 18
6CE–81840–01	25 – 4
67F–81841–00	25 – 12
6CE–81842–00	25 – 18
6BR–81845–00	19 – 7
67F–81846–00	25 – 24
6CE–81850–00	25 – 2
6CE–81869–00	25 – 21
67F–81891–00	25 – 15
6CE–81919–20	21 – 35
6CB–81923–00	21 – 36
6P2–81925–01	21 – 1
6CB–81929–00	21 – 4
6C5–81941–00	25 – 20
6CB–81948–02	21 – 8
6CE–81949–01	23 – 13
6AW–81950–00	21 – 15
6CB–81952–00	22 – 34
6AW–8195A–00	21 – 22
6CE–81960–10	19 – 11
6CE–81972–00–9S	19 – 12
6CE–81975–00	19 – 13
6CE–81980–00	22 – 2
6EE–81994–40	18 – 19
6EE–81994–50	18 – 20
6AH–81996–00	26 – 36
6CB–82105–01	21 – 39
6P2–82113–00	21 – 30
69J–82147–00	30 – 28
6E5–82148–00	30 – 8

PART NO. N° PIECES	REF. NO.
6H1–82148–00	30 – 6
6AW–82149–00	31 – 16
67F–82151–00	21 – 25
6CE–82151–00	21 – 21
6TA–82151–01	42 – 18
67F–82151–10	21 – 26
67F–82151–40	21 – 23
67F–82151–50	21 – 24
6CE–82170–11	21 – 20
6GR–82181–00	33 – 5
6CB–82310–00	20 – 1
6CB–82314–00	20 – 3
6CB–82316–01	19 – 3
6P2–82380–00	12 – 5
6CB–82388–00	22 – 17
6Y8–82509–10	42 – 8
6Y8–82521–11	42 – 15
6P2–82560–01	22 – 20
6BR–82563–01	22 – 25
69J–82587–00	22 – 27
6CE–82588–00	21 – 6
6E9–82588–00	22 – 21
6CB–82589–01	22 – 8
6CE–82590–15	22 – 1
6CB–82594–00	22 – 4
6CE–8259M–00	23 – 12
6CE–825E0–01	43 – 1
68F–82846–00	21 – 29
6X4–83383–00	42 – 5
6X4–83386–00	42 – 6
6E5–83558–00	34 – 36
6DA–83614–00	22 – 29
63P–83614–01	22 – 28
6AW–83651–00	22 – 23
6AW–8366B–01	24 – 1
60V–8366D–00	24 – 2
69J–83672–11	31 – 1
6Y8–8454G–00	42 – 11
6P2–85075–00	20 – 6
64J–85516–00	19 – 4
	21 – 9
6CB–85516–00	18 – 17
6CB–85544–00	21 – 28
689–85547–00	16 – 1
6CB–85547–00	10 – 10
6CB–85561–00	18 – 5
6CE–85564–00	29 – 6
6CB–85580–00	18 – 4

PART NO. N° PIECES	REF. NO.
6CE–85592–00	18 – 8
6P2–85780–00	7 – 11
6CB–85790–00	22 – 19
63P–85886–00	22 – 31
6P2–85896–00	20 – 5
6CE–8591A–13	19 – 1
6C5–86120–00	11 – 3
6CB–86120–00	7 – 1
6Y8–86260–03	42 – 2
6AA–86261–01	42 – 3
6Y8–86267–00	42 – 1
K0F–A3233–00	5 – 15
K0F–A3741–00	9 – 5
K0F–A3742–00	9 – 6
K0F–A3743–00	9 – 3
K0F–A3751–00	9 – 8
K0F–A3751–10	9 – 8
K0F–A3751–20	9 – 8
K0F–A3751–30	9 – 8
K0F–A3751–40	9 – 8
K0F–A3751–50	9 – 8
K0F–A3751–60	9 – 8
K0F–A3751–70	9 – 8
K0F–A3751–80	9 – 8
K0F–A3751–90	9 – 8
K0F–A3751–A0	9 – 8
K0F–A3751–B0	9 – 8
K0F–A3751–C0	9 – 8
K0F–A3751–D0	9 – 8
K0F–A3751–E0	9 – 8
K0F–A3751–F0	9 – 8
K0F–A3751–G0	9 – 8
K0F–A3751–H0	9 – 8
K0F–A3751–J0	9 – 8
K0F–A3751–K0	9 – 8
K0F–A3751–L0	9 – 8
K0F–A3751–M0	9 – 8
K0F–A3751–N0	9 – 8
K0F–A3751–P0	9 – 8
K0F–A3751–R0	9 – 8
K0F–A3751–S0	9 – 8
K0F–A3751–T0	9 – 8
K0F–A3753–00	9 – 8
K0F–A3753–10	9 – 8
K0F–A3753–20	9 – 8
K0F–A3753–30	9 – 8
K0F–A3753–40	9 – 8
K0F–A3753–50	9 – 8

NUMERICAL INDEX
INDEX NUMERIQUE

PART NO. N° PIECES	REF. NO.
K0F–A3753–60	9 – 8
K0F–A3753–70	9 – 8
6CB–W0001–03	44 – 1
6CE–W0001–23	45 – 1
6CE–W0078–02	1 – 20
	45 – 28
6CE–W009A–03–9S	6 – 1
6CE–W009C–03–9S	6 – 11
6CB–W1165–10	5 – 9
6CB–W4624–00	9 – 27
6CE–W8145–01	18 – 1
6EK–W9010–00	18 – 2
90101–09M70	41 – 9
90101–12065	30 – 43
90101–12066	30 – 43
90101–14004	31 – 17
90105–06035	7 – 3
	10 – 4
90105–06037	4 – 28
	4 – 45
	7 – 7
90105–06039	27 – 34
90105–06151	4 – 18
	4 – 40
	23 – 9
90105–06M07	4 – 13
	6 – 22
90105–06M08	13 – 9
90105–08175	4 – 7
	6 – 28
90105–08178	7 – 5
90105–08220	6 – 29
90105–08M61	36 – 80
	38 – 76
90105–08M87	23 – 5
90105–10M00	37 – 23
	39 – 23
90105–14005	31 – 27
90109–06277	6 – 33
	6 – 37
90109–06M80	28 – 14
90110–05039	37 – 21
	39 – 21
90110–08M05	32 – 83
90111–06142	28 – 4
	28 – 7
90111–06144	28 – 3
	28 – 8

PART NO. N° PIECES	REF. NO.
90111–08078	2 – 7
	3 – 7
90116–10041	37 – 9
	39 – 9
90119–06287	34 – 43
90119–06291	27 – 33
90119–06293	19 – 6
	21 – 11
90119–06299	10 – 2
90119–06309	10 – 20
	16 – 14
90119–06MA3	19 – 14
90119–07001	6 – 5
	6 – 15
90119–07234	6 – 6
	6 – 16
90119–08020	10 – 3
90119–08168	29 – 3
90119–08180	36 – 28
	38 – 28
90119–08182	34 – 4
90119–08187	26 – 21
90119–08191	36 – 26
	38 – 26
	45 – 38
90119–10007	34 – 27
90119–10008	37 – 13
	39 – 13
90119–10009	37 – 12
	39 – 12
90119–10024	30 – 25
	31 – 21
	31 – 33
90119–10038	37 – 9
	39 – 9
90119–10050	9 – 18
90119–10M07	9 – 31
90149–11001	6 – 27
90151–05M05	4 – 33
90151–06M02	4 – 11
	4 – 20
	34 – 3
90152–05M08	37 – 16
	39 – 16
90159–05059	43 – 3
90159–06053	28 – 11
90167–06M00	42 – 12
90170–09M05	41 – 10

PART NO. N° PIECES	REF. NO.
90170–10009	37 – 11
	39 – 11
90170–14M06	41 – 6
90170–16M19	36 – 43
	38 – 43
90170–30M18	36 – 38
	38 – 38
90171–18M04	37 – 32
	39 – 32
90173–06001	28 – 9
90179–06M28	6 – 41
90179–08003	23 – 2
90183–02M03	36 – 60
	38 – 58
90183–061A6	28 – 10
90185–05002	37 – 17
	37 – 20
	39 – 17
	39 – 20
90185–06M07	6 – 45
	29 – 12
90185–09M01	40 – 6
	41 – 11
90185–14M00	31 – 18
	31 – 28
90185–22M11	30 – 21
90201–02M00	36 – 59
	38 – 57
90201–06068	29 – 11
90201–06M02	34 – 40
90201–06M30	42 – 13
90201–10048	37 – 10
	39 – 10
90201–10M01	9 – 32
90201–10M20	40 – 7
90201–10M76	41 – 8
90201–11008	29 – 24
90201–12064	29 – 4
90201–12426	30 – 45
90201–13M01	30 – 44
90201–156J2	26 – 11
90201–16032	31 – 15
90201–16M00	36 – 44
	38 – 44
90201–186F1	6 – 8
	6 – 18
90201–26M59	30 – 20
90201–32008	36 – 74

PART NO. N° PIECES	REF. NO.
90201–40M00	31 – 6
90201–41008	36 – 49
90201–62008	36 – 32
	38 – 32
90202–08M41	29 – 10
90202–40M47	31 – 9
90206–15M18	26 – 12
90214–30003	36 – 37
	38 – 37
90249–06M19	30 – 35
90250–08M07	36 – 61
	38 – 59
90280–04002	36 – 22
	38 – 22
	45 – 34
90282–05008	36 – 76
	38 – 72
90340–08002	36 – 4
	38 – 4
90340–14M06	6 – 9
	35 – 4
90340–18M09	6 – 7
	6 – 17
90386–08008	29 – 2
90386–10001	29 – 25
90386–10M16	30 – 33
90386–11001	29 – 22
90386–15M73	26 – 10
90386–18M14	30 – 41
	32 – 24
90386–18M63	30 – 40
90386–25M31	30 – 19
90386–39M89	31 – 7
90387–05004	43 – 4
90387–06285	18 – 14
90387–06289	10 – 19
	16 – 16
90387–06M03	27 – 32
90387–06M43	28 – 13
90387–07028	28 – 6
90387–08104	29 – 5
90387–08M37	26 – 20
90387–08M45	2 – 10
	3 – 10
90387–10094	2 – 8
	3 – 8
90387–10M05	30 – 36
90387–10M61	40 – 3

PART NO. N° PIECES	REF. NO.
90387–11005	6 – 26
90387–28013	31 – 26
90401–19001	4 – 37
90430–06M03	6 – 23
90430–08003	1 – 18
	36 – 6
	38 – 6
	45 – 14
90430–14115	6 – 10
90430–14M09	1 – 17
	35 – 5
	45 – 2
90445–07032	34 – 38
90445–07034	34 – 38
90445–09068	19 – 29
90445–09220	8 – 1
90445–096H2	8 – 10
90445–097F7	11 – 9
90445–107A5	19 – 19
90445–14019	27 – 23
90445–14021	27 – 14
90445–16015	27 – 16
90446–15003	21 – 19
	31 – 34
90462–06013	19 – 21
90462–10061	34 – 41
90464–06001	22 – 6
90464–07209	11 – 20
90464–07M20	11 – 35
90464–08004	12 – 9
90464–09013	8 – 5
	11 – 15
90464–09129	22 – 33
90464–10011	11 – 34
90464–10M59	8 – 4
90464–11012	11 – 32
90464–11121	22 – 13
90464–12009	15 – 14
90464–12010	8 – 6
	11 – 13
	11 – 33
90464–12012	15 – 15
	15 – 16
	16 – 5
90464–12183	21 – 13
	22 – 15
90464–13227	23 – 10
90464–13249	10 – 21

PART NO. N° PIECES	REF. NO.
90464–13249	19 – 9
	21 – 12
90464–16001	22 – 24
	27 – 28
90464–18004	23 – 11
90464–18246	22 – 14
90464–20181	10 – 22
	11 – 19
	19 – 10
	21 – 14
	22 – 3
	22 – 16
90464–20258	26 – 33
90464–23001	11 – 6
90464–26002	8 – 9
	11 – 14
	19 – 23
90464–99004	10 – 12
90465–08M83	30 – 16
	30 – 23
90465–11M10	8 – 7
	8 – 11
	11 – 7
	11 – 12
	16 – 6
	16 – 19
	18 – 9
	19 – 31
	19 – 32
	19 – 33
	24 – 4
	27 – 3
	27 – 24
	30 – 22
	31 – 35
	34 – 37
	34 – 37
	42 – 10
	43 – 5
90465–11M59	8 – 16
90465–13M18	43 – 6
90465–13M24	22 – 7
90465–14M66	8 – 17
	15 – 13
90467–08004	19 – 34
90467–08M18	19 – 20
90467–090A0	11 – 11
90467–130A5	27 – 25

NUMERICAL INDEX
INDEX NUMERIQUE

PART NO. N° PIECES	REF. NO.
90467–140A8	27 – 26
90467–140A9	27 – 27
90468–18008	29 – 13
	29 – 17
90480–10M23	10 – 18
	16 – 15
90480–12314	18 – 16
	20 – 4
90480–13M24	28 – 12
90480–14029	27 – 31
90480–15M31	18 – 15
90480–16009	28 – 5
90480–22M81	26 – 19
90501–10M77	36 – 55
	38 – 53
90506–16003	30 – 38
90506–22001	26 – 16
90560–12M01	40 – 4
91318–05025	32 – 59
91318–05040	32 – 64
91490–40030	37 – 33
	39 – 33
91690–30020	30 – 37
91690–40010	4 – 16
91809–08006	6 – 4
	6 – 14
92990–06100	2 – 14
	3 – 14
92990–06200	2 – 5
	3 – 5
92990–08600	2 – 9
	3 – 9
92990–18200	37 – 31
	39 – 31
92995–14600	31 – 19
	31 – 29
93101–28019	36 – 30
	38 – 30
	45 – 23
93101–30019	36 – 70
	38 – 67
	45 – 26
93101–30030	36 – 69
	38 – 66
	45 – 25
93102–38008	9 – 26
	44 – 11
93102–85008	5 – 4
93102–85008	44 – 10
93104–22M07	36 – 15
	38 – 15
	45 – 18
	45 – 29
93106–09014	36 – 11
	38 – 11
	45 – 17
93106–10001	36 – 11
	38 – 11
	45 – 17
93106–19001	32 – 5
93210–04279	42 – 9
93210–064A5	32 – 51
93210–07003	34 – 48
	37 – 25
	39 – 25
	45 – 15
93210–08391	32 – 48
93210–09165	29 – 21
	32 – 72
93210–16275	40 – 9
93210–17239	32 – 22
93210–19MJ3	35 – 20
	45 – 4
93210–24M79	4 – 42
	44 – 17
93210–26658	4 – 8
	35 – 15
	44 – 6
	44 – 14
93210–27370	4 – 44
	44 – 18
93210–33M49	36 – 10
	38 – 10
	45 – 16
93210–35321	31 – 8
93210–37160	36 – 18
	38 – 18
	45 – 20
	45 – 32
93210–64488	36 – 34
	38 – 34
	45 – 24
93210–66001	32 – 69
93210–94003	36 – 17
	38 – 17
	45 – 19
93210–94003	45 – 31
93211–02001	36 – 71
	38 – 68
	45 – 27
93306–209U0	36 – 65
93311–83280	36 – 3
	38 – 3
93311–85894	36 – 45
	38 – 46
93315–43061	36 – 68
	38 – 65
93332–00048	38 – 63
93332–000A4	36 – 48
93332–000A5	36 – 73
93340–67011	36 – 51
	38 – 49
93341–440U5	38 – 70
93399–99966	36 – 31
	38 – 31
93410–10082	29 – 26
93410–18M05	30 – 42
93410–37M04	31 – 11
93420–36M01	34 – 33
93501–04011	36 – 56
	38 – 54
93501–08001	32 – 47
93503–16003	32 – 37
93505–32038	32 – 13
	32 – 34
93604–07M13	29 – 19
93604–35236	32 – 60
93605–10108	9 – 10
	9 – 12
	9 – 14
	9 – 16
93606–12019	4 – 3
	4 – 4
	5 – 3
	36 – 25
	38 – 25
	45 – 37
93606–19002	30 – 2
93606–19M23	34 – 22
93608–16M16	34 – 7
	34 – 28
	34 – 46
	35 – 3
	36 – 47
93608–16M16	37 – 8
	38 – 48
	39 – 8
93700–06002	30 – 15
	30 – 27
94702–00400	1 – 8
	6 – 46
95022–06035	18 – 10
95023–06012	19 – 22
95027–06025	4 – 27
95380–06600	2 – 15
	3 – 15
	11 – 4
95380–12600	30 – 46
95380–14700	41 – 7
95780–06300	42 – 14
95780–08300	2 – 11
	3 – 11
95780–10300	31 – 4
95812–06025	35 – 8
95814–08020	21 – 3
95D75–06025	29 – 23
	29 – 28
95D75–06040	35 – 14
95D75–08030	10 – 1
95D75–08060	12 – 4
95D95–06010	34 – 35
95D95–06012	19 – 8
	22 – 5
	22 – 22
	22 – 30
	26 – 18
	26 – 27
	26 – 29
	26 – 31
95D95–06014	6 – 39
	16 – 21
	26 – 4
95D95–06016	7 – 9
	11 – 17
	16 – 17
	21 – 7
	22 – 18
	22 – 35
	23 – 7
	24 – 3
	27 – 12
	35 – 21
95D95–06020	10 – 13
	18 – 13
	19 – 2
	21 – 5
	22 – 12
	34 – 10
95D95–06025	19 – 15
	20 – 2
95D95–06030	6 – 32
	6 – 36
	18 – 11
95D95–08012	26 – 15
95D95–08016	21 – 2
	21 – 37
	21 – 38
95D95–08025	6 – 24
97513–06520	21 – 17
97513–08545	23 – 1
97595–05520	18 – 7
97602–04310	33 – 8
97780–50620	21 – 32
97780–60516	2 – 4
	3 – 4
97780–60520	27 – 22
97780–60620	42 – 7
97880–06035	42 – 12
97885–06010	30 – 11
	30 – 14
97980–06216	42 – 4
97985–04308	23 – 3
97985–06212	30 – 9
	30 – 17
97985–06216	31 – 2
97D95–06010	30 – 30
	34 – 39
97D95–06012	34 – 31
97E75–06525	29 – 15
97E75–06620	12 – 6
97E75–08535	34 – 21
	35 – 2
97E75–08560	34 – 15
97E75–10535	34 – 6
97E75–10545	34 – 5
97E75–10570	37 – 13
	39 – 13
97E95–06510	30 – 7
97E95–06514	30 – 24
97E95–06516	10 – 17
97E95–06516	21 – 34
	43 – 2
97E95–06520	20 – 7
97E95–06525	30 – 5
97E95–06610	21 – 16
97E95–08520	36 – 36
	38 – 36
98507–04008	14 – 39
98780–06530	4 – 31
98780–06550	4 – 35
99001–08600	36 – 13
	38 – 13
99001–09600	36 – 13
	38 – 13
99002–03600	32 – 40
99009–47500	36 – 50
99530–08012	18 – 6
99530–14016	9 – 30