YAMAHA

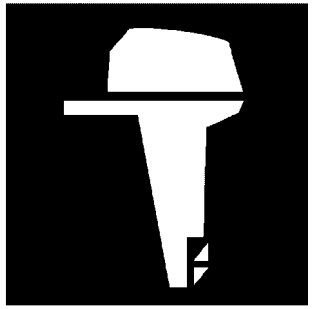

PARTS CATALOGUE

F300CA-2020 (6CEB)

YAMAHA
GENUINE
Parts & Accessories

1U6CE-100EA

( )

F300CA
PARTS CATALOGUE
©2025 by Yamaha Motor Co., Ltd.
1st edition, March 2025
All rights reserved.
Any reprinting or unauthorized use
without the written permission of
Yamaha Motor Co., Ltd.
is expressly prohibited.
Printed in Japan.

FOREWORD

This Parts Catalogue is related to the parts for the model(s) on the cover page. When you are ordering replacement parts, please refer to this Parts Catalogue and quote both part numbers and part names correctly.

1. Modifications or additions which have been made after the issue of the Parts Catalogue will be announced in the Parts News.
   It is advisable that you make the necessary corrections to the Parts Catalogue according to the Parts News.

2. Abbreviations
   The following abbreviations are used in this Parts Catalogue.
   "UR" Use specified parts number.
   "UN" Use as many as needed.
   "AP" Alternate Parts
   "LM" Locally Made (Parts need to be ordered locally)
   "F#" Frame No. (Applicable machine No.)
   "O/S" Over Size

3. The number of components for assembly
   - Parts, which are to be supplied in an assembly, are listed with a dot (.) in front of the part name as shown below.
   - The numeral appearing to the right of each component part indicates the quantity of parts for each assembly unit.

PART NO.	DESCRIPTION	Q'TY	REMARKS
2F5–83310–60	FRONT FLASHER LIGHT ASSY	2	
115–83311–60	.BULB (6V–18W)	1	

4. Applicable colours of graphics are represented in the "REMARKS" as shown below.

PART NO.	DESCRIPTION	Q'TY	REMARKS
2N4–24110–00–X5	FUEL TANK COMP.	2	MXR
3J1–24240–10	.GRAPHIC, FUEL TANK	1	FOR MXR

5. Note that the illustrations for reference in finding parts numbers are not to be used for assembling. When assembling, please use the applicable service manual.

6. The asterisk (*) before a reference number indicates modified items after the first edition.

7. Applicable Serial No.
   Engine Serial No.

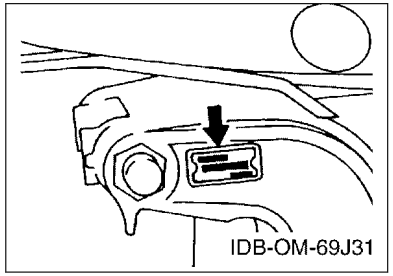

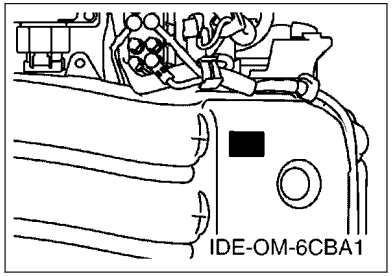

8. Applicable Engine Starting Serial No.

Model	Serial No.	Model	Serial No.
F300CA	6CE-1073078		

9. Applicable Colour Code

Abbreviation	Colour Name	Colour Code
DBN1	DARK BLUISH GRAY 1	008D

10. Quantity Column Information

Column No.	Name Of Q'ty Column	Applicable Model
1	XCA	F300XCA
2	UCA	F300UCA
3	NCA	F300NCA
4	NCA2	F300NCA2 FOR LOWER GRAY
5	NCA2	F300NCA2 FOR LOWER WHITE

CONTENTS

SCHEDULED SERVICE PARTS....1
TOP COWLING....2
CYLINDER & CRANKCASE 1....4
CRANKSHAFT & PISTON....6
CYLINDER & CRANKCASE 2....7
CYLINDER & CRANKCASE 3....9
CYLINDER & CRANKCASE 4....10
VALVE....11
INTAKE 1....14
INTAKE 2....15
THROTTLE BODY ASSY 1....17
THROTTLE BODY ASSY 2....18
FUEL INJECTION PUMP 1....19
FUEL INJECTION PUMP 2....21
FUEL 1....22
FUEL 2....23
GENERATOR....24
ELECTRICAL 1....25
ELECTRICAL 2....27
ELECTRICAL 3....28
ELECTRICAL 4....30
ELECTRICAL 5....32
ELECTRICAL 6....33
STARTING MOTOR....34
BOTTOM COWLING 1....35
BOTTOM COWLING 2....37
BOTTOM COWLING 3....39
CONTROL....40
BRACKET 1....42
BRACKET 2....44
POWER TRIM & TILT ASSY 1....46
POWER TRIM & TILT ASSY 2....50
UPPER CASING....51
OIL PAN....53
LOWER CASING & DRIVE 1....54
LOWER CASING & DRIVE 2....58
STEERING GUIDE....60
OPTIONAL PARTS 1....61
OPTIONAL PARTS 2....62
OPTIONAL PARTS 3....63
OPTIONAL PARTS 4....64
OPTIONAL PARTS 5....69
OPTIONAL PARTS 6....71
OPTIONAL PARTS 7....73
OPTIONAL PARTS 8....77
OPTIONAL PARTS 9....78
OPTIONAL PARTS 10....79
REPAIR KIT 1....80
REPAIR KIT 2....81

INDEX

NUMERICAL INDEX....83

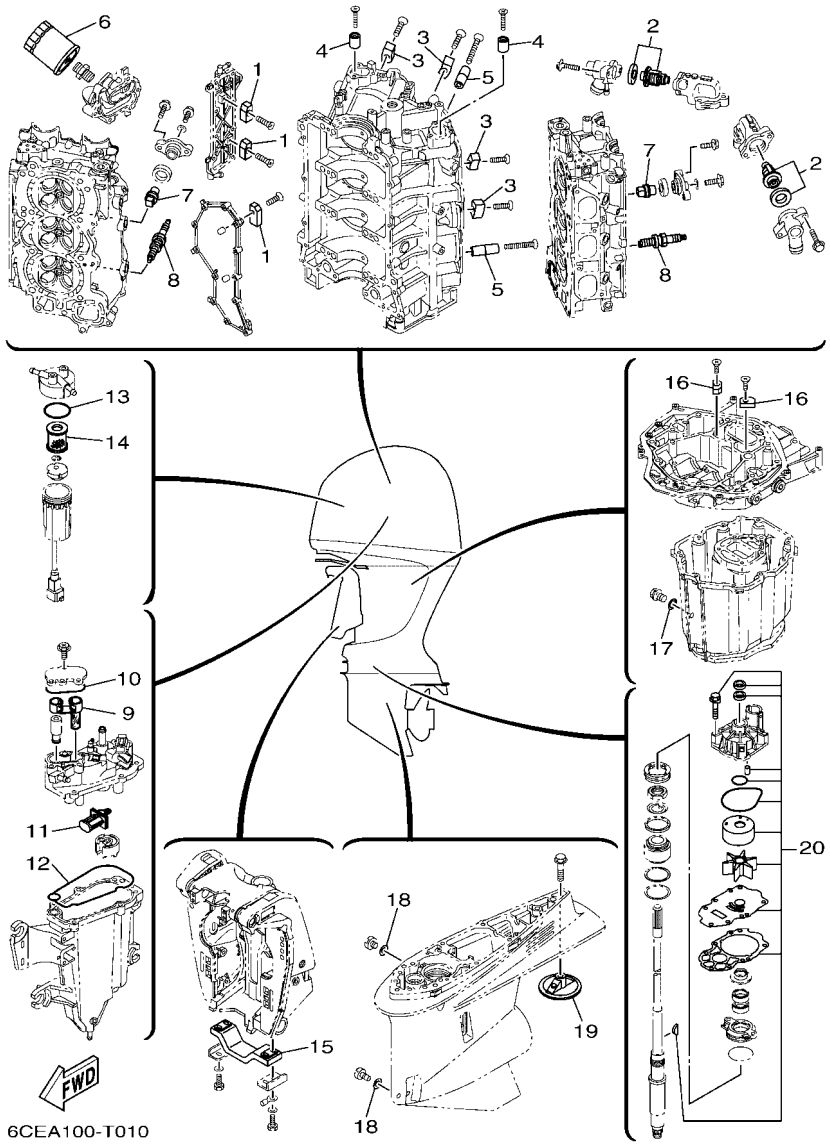

FIG. 1 SCHEDULED SERVICE PARTS

REF. NO.	PART NO.	DESCRIPTION	XCA	UCA	NCA	NCA2	NCA2	REMARKS
1	63P–11325–01	ANODE	4	4	4	4	4	
2	6CE–12411–00	THERMOSTAT	2	2	2	2	2	
3	6AW–1132P–00	ANODE 5	4	4	4	4	4	
4	68T–11325–00	ANODE	2	2	2	2	2	
5	6AW–1132N–01	ANODE 4	2	2	2	2	2	
6	N26–13440–03	ELEMENT ASSY, OIL CLEANER	1	1	1	1	1	
7	67F–11325–01	ANODE	8	8	8	8	8	
8	94702–00400	PLUG, SPARK (NGK LFR6A-11)	6	6	6	6	6	
9	6CB–24501–01	FILTER, FUEL	1	1	1	1	1	
10	6CB–13016–00	O-RING	1	1	1	1	1	
11	63P–13915–00	FILTER	1	1	1	1	1	
12	6CB–14984–00	GASKET, FLOAT CHAMBER	1	1	1	1	1	
13	6P3–24564–00	GASKET	1	1	1	1	1	
14	6P3–24563–01	ELEMENT, FILTER	1	1	1	1	1	
15	6G5–45251–02	ANODE	1	1	1	1	1	
16	63P–11325–11	ANODE	2	2	2	2	2	
17	90430–14M09	GASKET	1	1	1	1	1	
18	90430–08003	GASKET	2	2	2	2	2	
19	6CE–45373–00	ANODE	1	1	1	1	1	
20	6CE–W0078–01	WATER PUMP REPAIR KIT	1	1	1	1	1	

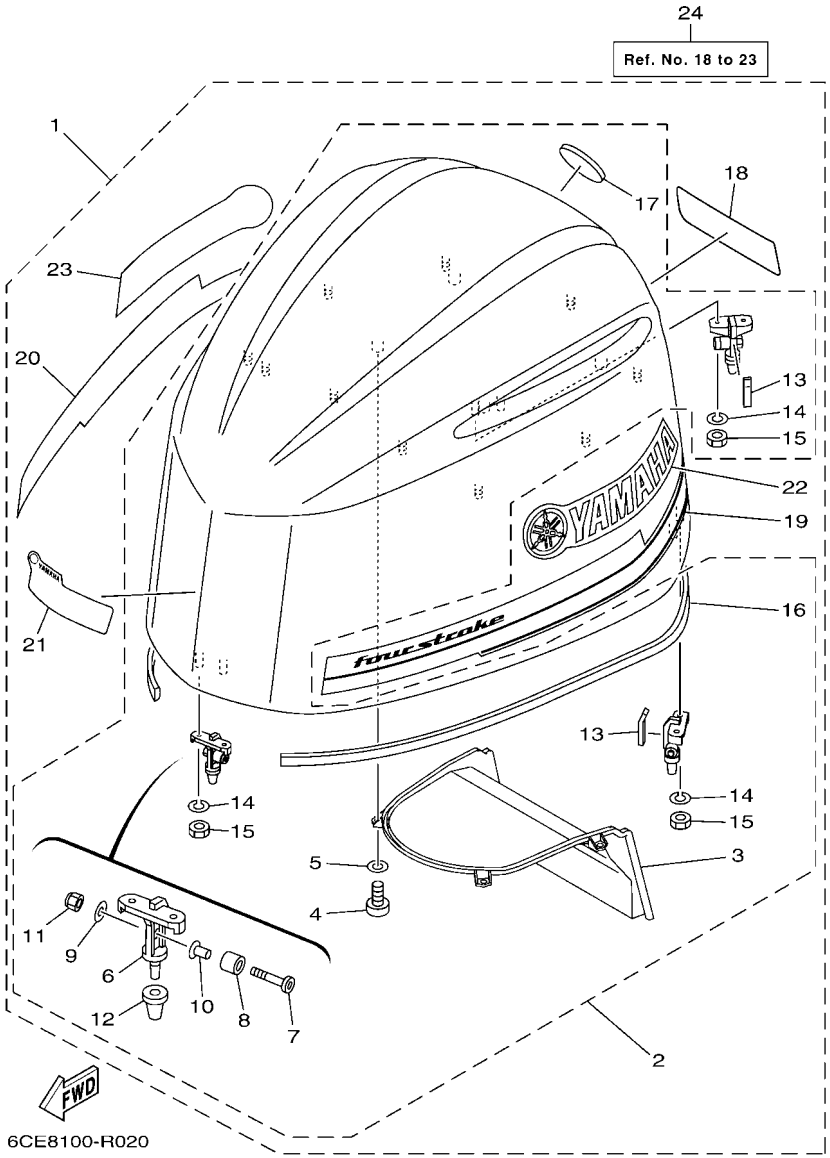

FIG. 2 TOP COWLING

REF. NO.	PART NO.	DESCRIPTION	XCA	UCA	NCA	NCA2	NCA2	REMARKS
1	6CE–42610–02	TOP COWLING ASSY	1	1	1			
	6CE–42610–22–CE	TOP COWLING ASSY				1	1	WHITE
2	6CE–4261A–00	.TOP COWLING W/O GRAPHICS	1	1	1			
	6CE–4261A–00–CE	.TOP COWLING W/O GRAPHICS				1	1	WHITE
3	6CE–42635–00	..DUCT, WATER SEPARATOR	1	1	1	1	1	
4	97780–60516	..SCREW, TAPPING	4	4	4	4	4	
5	92990–06200	..WASHER, PLAIN	4	4	4	4	4	
6	6CB–42647–A0	..HOLDER, CLAMP BAND	3	3	3	3	3	
7	90111–08078	..BOLT,HEX. SOCKET BUTTON	3	3	3	3	3	
8	90387–10094	..COLLAR	3	3	3	3	3	
9	92990–08600	..WASHER, PLATE	3	3	3	3	3	
10	90387–08M45	..COLLAR	3	3	3	3	3	
11	95780–08300	..NUT, FLANGE	3	3	3	3	3	
12	6AW–42663–00	..DAMPER 2	3	3	3	3	3	
13	6CB–42134–00	..COVER	2	2	2	2	2	
14	92990–06100	..WASHER, SPRING	6	6	6	6	6	
15	95380–06600	..NUT, HEXAGON	6	6	6	6	6	
16	6CB–42628–00	..SEAL	1	1	1	1	1	
17	6AW–42697–10	..TUNING FORK MARK	1	1	1	1	1	
18	6CE–42678–02	.GRAPHIC, REAR	1	1	1			
	6CE–42678–22	.GRAPHIC, REAR				1	1	FOR WHITE COWLING
19	6CE–42675–02	.GRAPHIC, SIDE 1	1	1	1			
	6CE–42675–22	.GRAPHIC, SIDE 1				1	1	FOR WHITE COWLING
20	6CE–42676–02	.GRAPHIC, SIDE 2	1	1	1			
	6CE–42676–22	.GRAPHIC, SIDE 2				1	1	FOR WHITE COWLING
21	6CE–42677–01	.GRAPHIC, FRONT	1	1	1			
	6CE–42677–22	.GRAPHIC, FRONT				1	1	FOR WHITE COWLING

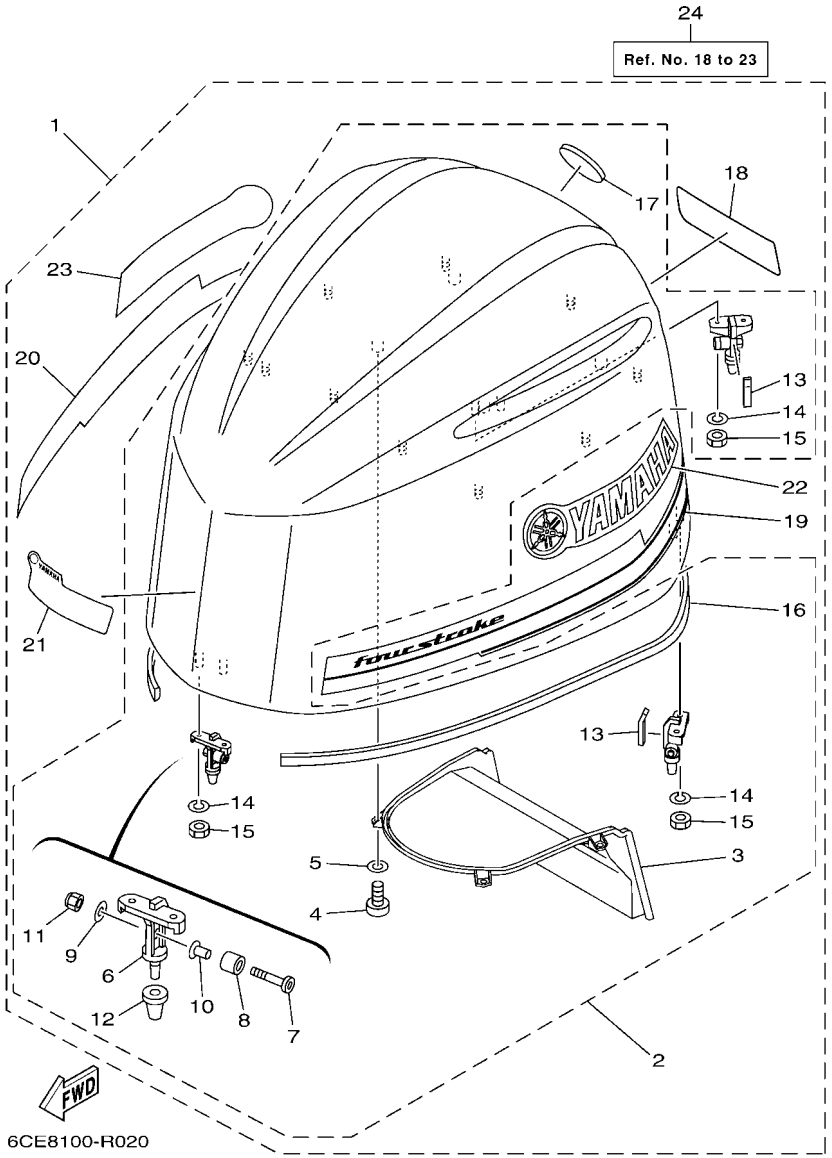

FIG. 2 TOP COWLING

REF. NO.	PART NO.	DESCRIPTION	XCA	UCA	NCA	NCA2	NCA2	REMARKS
22	6CE–42681–03	.MARK, COWLING	1	1	1			
	6CE–42681–22	.MARK, COWLING				1	1	FOR WHITE COWLING
23	6CE–42682–03	.MARK, COWLING	1	1	1			
	6CE–42682–22	.MARK, COWLING				1	1	FOR WHITE COWLING
24	6CE–W4267–00	GRAPHIC SET, TOP COWLING	1	1	1			AP FOR USA
	6CE–W4267–22	GRAPHIC SET, TOP COWLING				1	1	AP FOR USA(WHITE)

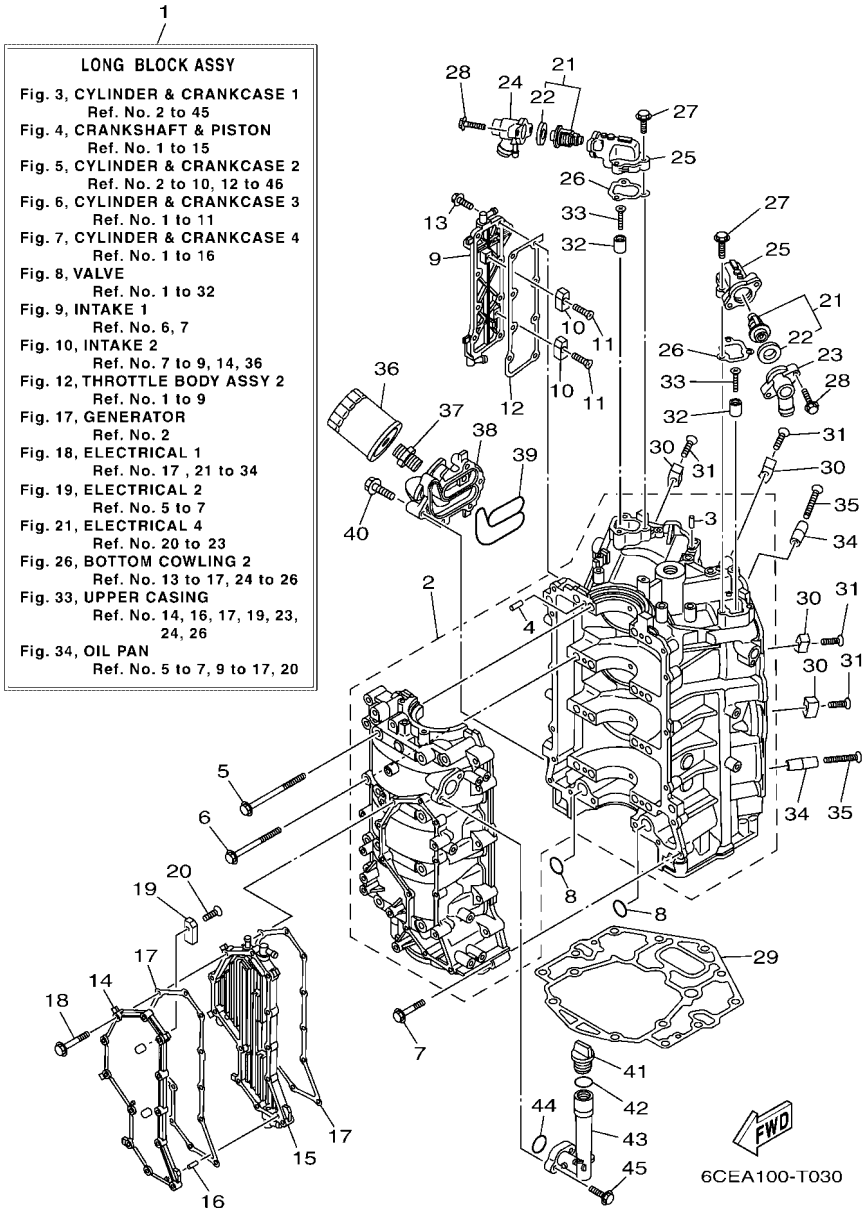

FIG. 3 CYLINDER & CRANKCASE 1

REF. NO.	PART NO.	DESCRIPTION	XCA	UCA	NCA	NCA2	NCA2	REMARKS
1	6CE–11000–03	LONG BLOCK ASSY	1	1	1	1	1	
2	6CE–15100–10	CRANKCASE ASSY	1	1	1	1	1	
3	93606–12019	.PIN, DOWEL	3	3	3	3	3	
4	93606–12019	.PIN, DOWEL	8	8	8	8	8	
5	6CB–15187–00	BOLT	8	8	8	8	8	
6	6CB–15481–00	BOLT 1	8	8	8	8	8	
7	90105–08175	BOLT, FLANGE	16	16	16	16	16	
8	93210–26658	O-RING	2	2	2	2	2	
9	6CE–1131C–00–9S	COVER, JOINT	1	1	1	1	1	
10	63P–11325–01	ANODE	2	2	2	2	2	
11	90151–06M02	SCREW, COUNTERSUNK	2	2	2	2	2	
12	6CB–1131B–00	GASKET, COVER	1	1	1	1	1	
13	90105–06M07	BOLT, FLANGE	8	8	8	8	8	
14	6CE–15411–00–9S	COVER, CRANKCASE 1	1	1	1	1	1	
15	6CE–15421–10–9S	COVER, CRANKCASE 2	1	1	1	1	1	
16	91690–40010	PIN, SPRING	1	1	1	1	1	
17	6CB–15451–01	GASKET, CRANKCASE COVER 1	2	2	2	2	2	
18	90105–06151	BOLT, FLANGE	12	12	12	12	12	
19	63P–11325–01	ANODE	2	2	2	2	2	
20	90151–06M02	SCREW, COUNTERSUNK	2	2	2	2	2	
21	6CE–12411–00	THERMOSTAT	2	2	2	2	2	
22	67F–12412–00	.SEAL, THERMOSTAT	1	1	1	1	1	
23	6CE–12413–B0–9S	COVER, THERMOSTAT	1	1	1	1	1	
24	6CE–12413–A0–9S	COVER, THERMOSTAT	1	1	1	1	1	
25	6CB–12422–10–9S	COVER, HOUSING	2	2	2	2	2	
26	6CB–12427–11	GASKET, HOUSING COVER 1	2	2	2	2	2	
27	95027–06025	BOLT, FLANGE	6	6	6	6	6	

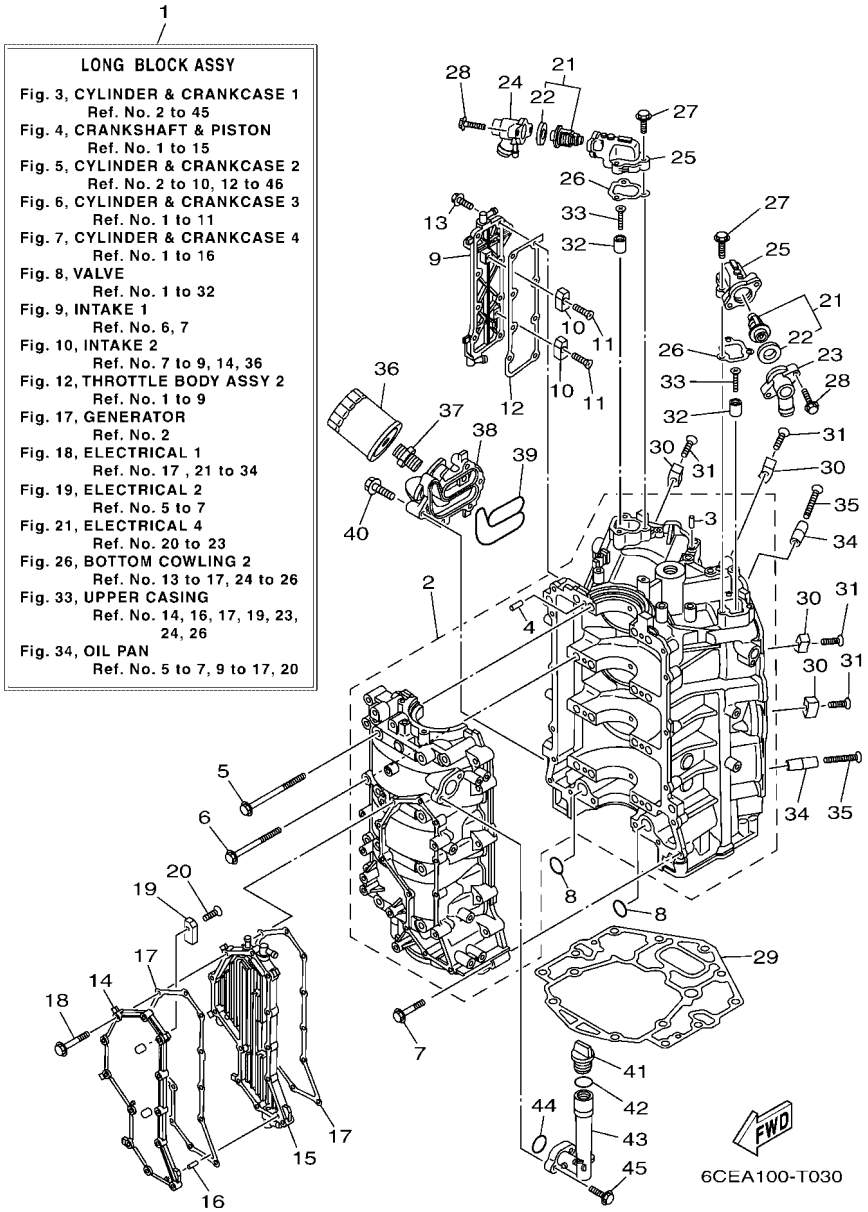

FIG. 3 CYLINDER & CRANKCASE 1

REF. NO.	PART NO.	DESCRIPTION	XCA	UCA	NCA	NCA2	NCA2	REMARKS
28	90105–06037	BOLT, FLANGE	4	4	4	4	4	
29	6CB–11351–00	GASKET, CYLINDER	1	1	1	1	1	
30	6AW–1132P–00	ANODE 5	4	4	4	4	4	
31	98780–06530	SCREW, FLAT HEAD	4	4	4	4	4	
32	68T–11325–00	ANODE	2	2	2	2	2	
33	90151–05M05	SCREW, COUNTERSUNK	2	2	2	2	2	
34	6AW–1132N–01	ANODE 4	2	2	2	2	2	
35	98780–06550	SCREW, FLAT HEAD	2	2	2	2	2	
36	N26–13440–03	ELEMENT ASSY, OIL CLEANER	1	1	1	1	1	
37	90401–19001	BOLT, UNION	1	1	1	1	1	
38	6CE–13446–10–9S	CONNECTOR	1	1	1	1	1	
39	6CB–13477–00	GASKET	1	1	1	1	1	
40	90105–06151	BOLT, FLANGE	5	5	5	5	5	
41	6G8–15363–00	PLUG, OIL	1	1	1	1	1	
42	93210–24M79	O-RING	1	1	1	1	1	
43	6CB–15319–00	JOINT	1	1	1	1	1	
44	93210–27370	O-RING	1	1	1	1	1	
45	90105–06037	BOLT, FLANGE	2	2	2	2	2	

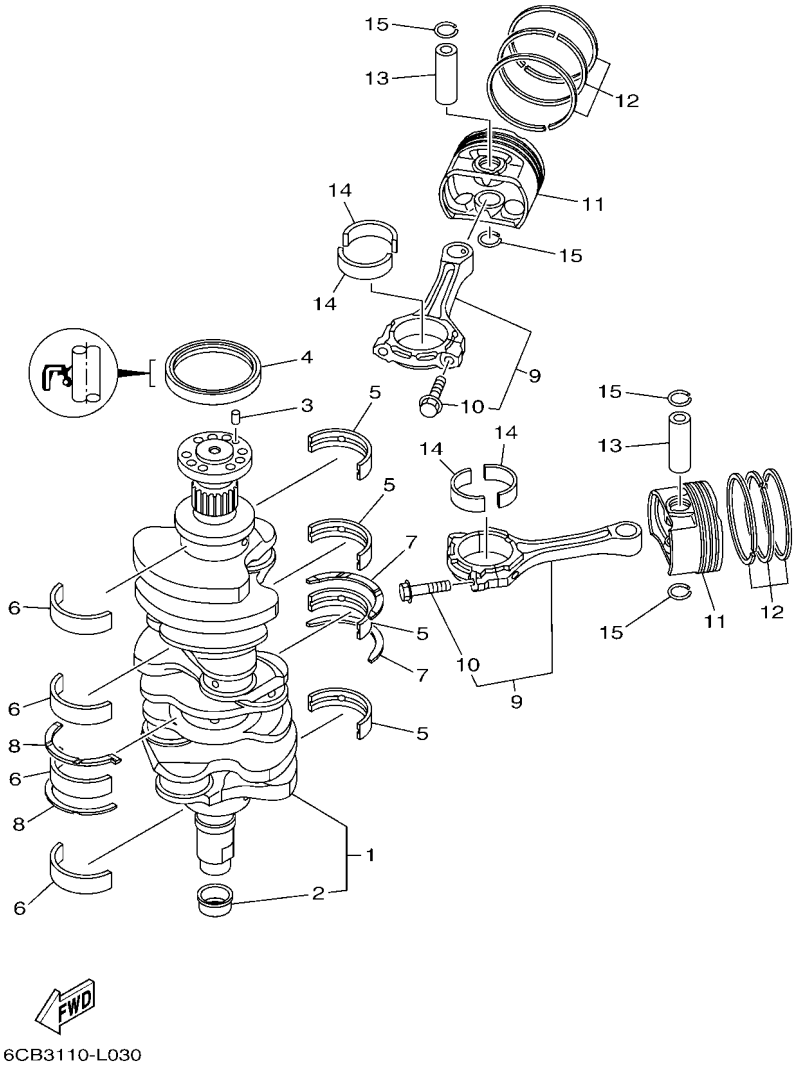

FIG. 4 CRANKSHAFT & PISTON

REF. NO.	PART NO.	DESCRIPTION	XCA	UCA	NCA	NCA2	NCA2	REMARKS
1	6CB–11410–00	CRANKSHAFT	1	1	1	1	1	
2	6CB–11478–00	.COLLAR	1	1	1	1	1	
3	93606–12019	PIN, DOWEL	1	1	1	1	1	
4	93102–85008	OIL SEAL	1	1	1	1	1	
5	6CB–11416–00	PLANE BEARING, CRANKSHAFT 1	4	4	4	4	4	UR PURPLE
	6CB–11416–10	PLANE BEARING, CRANKSHAFT 1	4	4	4	4	4	UR YELLOW
	6CB–11416–20	PLANE BEARING, CRANKSHAFT 1	4	4	4	4	4	UR RED
	6CB–11416–30	PLANE BEARING, CRANKSHAFT 1	4	4	4	4	4	UR GREEN
	6CB–11416–40	PLANE BEARING, CRANKSHAFT 1	4	4	4	4	4	UR BROWN
6	6CB–11417–00	PLANE BEARING, CRANKSHAFT 2	4	4	4	4	4	UR PURPLE
	6CB–11417–10	PLANE BEARING, CRANKSHAFT 2	4	4	4	4	4	UR YELLOW
	6CB–11417–20	PLANE BEARING, CRANKSHAFT 2	4	4	4	4	4	UR RED
	6CB–11417–30	PLANE BEARING, CRANKSHAFT 2	4	4	4	4	4	UR GREEN
	6CB–11417–40	PLANE BEARING, CRANKSHAFT 2	4	4	4	4	4	UR BROWN
7	6CB–11426–03	BEARING, THRUST 1	2	2	2	2	2	
8	6CB–11427–03	BEARING, THRUST 2	2	2	2	2	2	
9	6CB–W1165–10	CONNECTING ROD ASSY	6	6	6	6	6	
10	63P–11654–10	.BOLT, CONNECTING ROD	2	2	2	2	2	
11	6CE–11631–02	PISTON (STD)	6	6	6	6	6	
12	6CB–11603–00	PISTON RING SET (STD)	6	6	6	6	6	
13	6CB–11633–00	PIN, PISTON	6	6	6	6	6	
14	6JD–11656–00	PLANE BEARING, CONNECTING ROD	12	12	12	12	12	UR BLACK
	6JD–11656–10	PLANE BEARING, CONNECTING ROD	12	12	12	12	12	UR PINK
	6JD–11656–20	PLANE BEARING, CONNECTING ROD	12	12	12	12	12	UR RED
15	K0F–A3233–00	RING,HOLE SNAP	12	12	12	12	12	

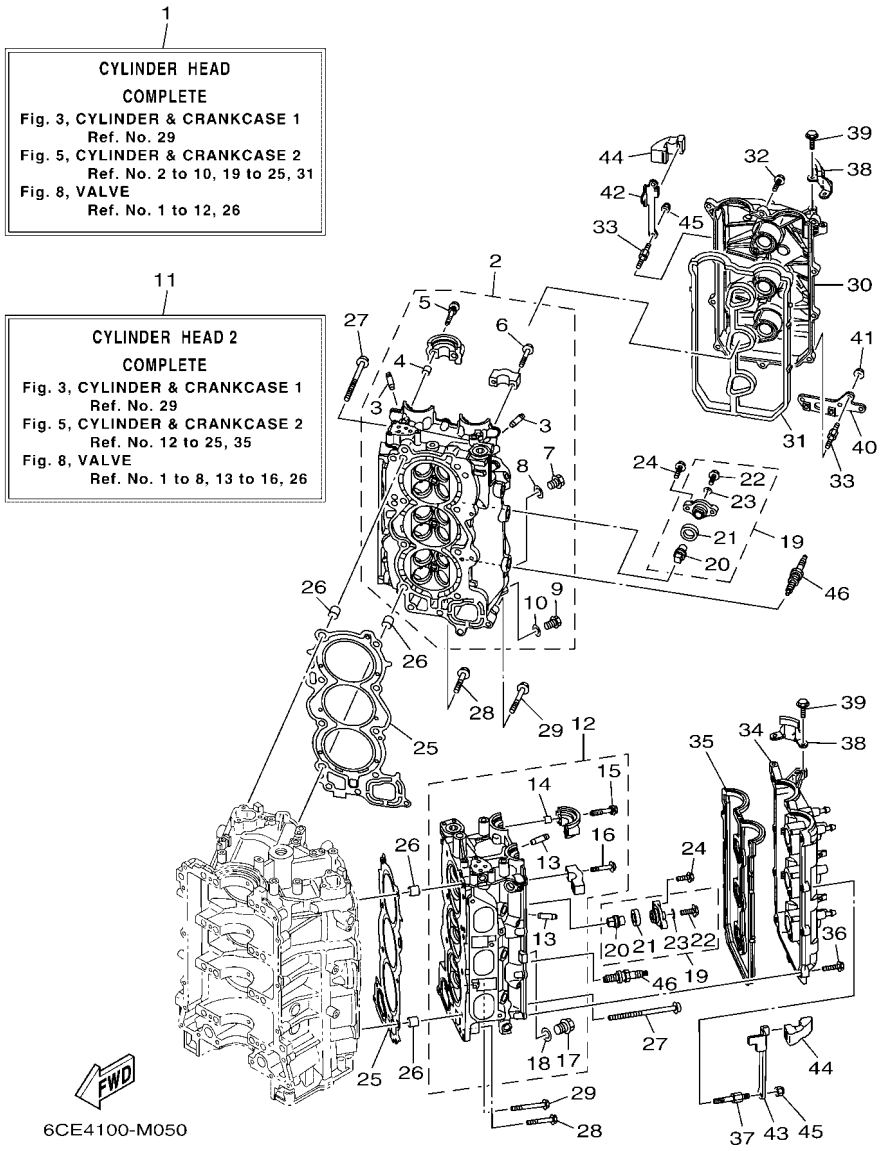

FIG. 5 CYLINDER & CRANKCASE 2

REF. NO.	PART NO.	DESCRIPTION	XCA	UCA	NCA	NCA2	NCA2	REMARKS
1	6CE–W009A–03–9S	CYLINDER HEAD COMPLETE	1	1	1	1	1	
2	6CE–11110–12–9S	CYLINDER HEAD ASSY	1	1	1	1	1	
3	6S5–11133–10	.GUIDE, VALVE 1	12	12	12	12	12	
4	91809–08006	.PIN, DOWEL	4	4	4	4	4	
5	90119–07001	.BOLT, WITH WASHER	4	4	4	4	4	
6	90119–07234	.BOLT, WITH WASHER	12	12	12	12	12	
7	90340–18M09	.PLUG, STRAIGHT SCREW	1	1	1	1	1	
8	90201–186F1	.WASHER, PLATE	1	1	1	1	1	
9	90340–14M06	.PLUG, STRAIGHT SCREW	1	1	1	1	1	
10	90430–14115	.GASKET	1	1	1	1	1	
11	6CE–W009C–03–9S	CYLINDER HEAD 2 COMPLETE	1	1	1	1	1	
12	6CE–11120–12–9S	CYLINDER HEAD ASSY 2	1	1	1	1	1	
13	6S5–11133–10	.GUIDE, VALVE 1	12	12	12	12	12	
14	91809–08006	.PIN, DOWEL	4	4	4	4	4	
15	90119–07001	.BOLT, WITH WASHER	4	4	4	4	4	
16	90119–07234	.BOLT, WITH WASHER	12	12	12	12	12	
17	90340–18M09	.PLUG, STRAIGHT SCREW	1	1	1	1	1	
18	90201–186F1	.WASHER, PLATE	1	1	1	1	1	
19	67F–11301–00	ANODE COVER ASSY	8	8	8	8	8	
20	67F–11325–01	.ANODE	1	1	1	1	1	
21	67F–11328–00	.GROMMET, ANODE	1	1	1	1	1	
22	90105–06M07	.BOLT, FLANGE	1	1	1	1	1	
23	90430–06M03	.GASKET	1	1	1	1	1	
24	95D95–08025	BOLT, FLANGE DEEP RECESS	16	16	16	16	16	
25	6CB–11181–00	GASKET, CYLINDER HEAD 1	2	2	2	2	2	
26	90387–11005	COLLAR	4	4	4	4	4	
27	90149–11001	SCREW	16	16	16	16	16	

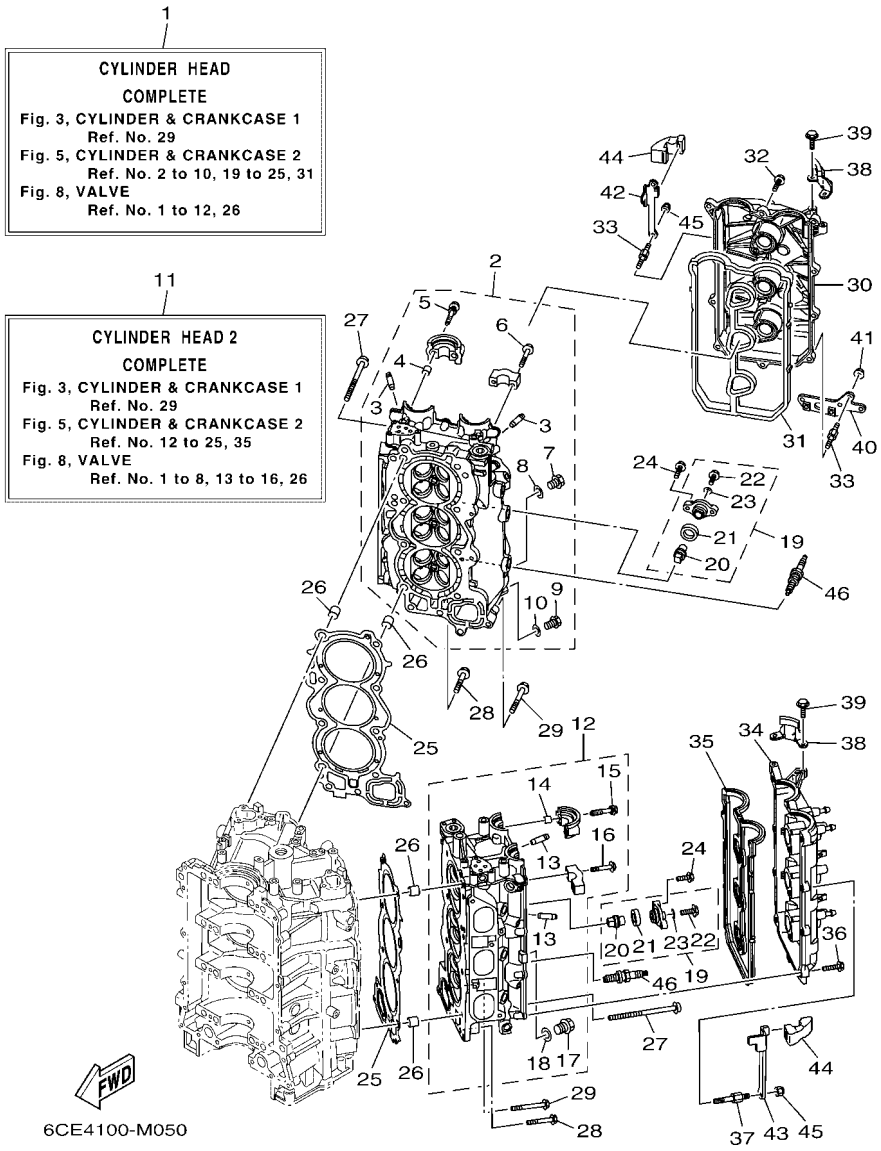

FIG. 5 CYLINDER & CRANKCASE 2

REF. NO.	PART NO.	DESCRIPTION	XCA	UCA	NCA	NCA2	NCA2	REMARKS
28	90105–08175	BOLT, FLANGE	4	4	4	4	4	
29	90105–08220	BOLT, FLANGE	2	2	2	2	2	
30	6CB–11191–02	COVER, CYLINDER HEAD 1	1	1	1	1	1	
31	6CB–11193–00	GASKET, HEAD COVER 1	1	1	1	1	1	
32	95D95–06030	BOLT, FLANGE DEEP RECESS	9	9	9	9	9	
33	90109–06277	BOLT	4	4	4	4	4	
34	6CB–11192–02	COVER, CYLINDER HEAD 2	1	1	1	1	1	
35	6CB–11194–00	GASKET, HEAD COVER 2	1	1	1	1	1	
36	95D95–06030	BOLT, FLANGE DEEP RECESS	11	11	11	11	11	
37	90109–06277	BOLT	2	2	2	2	2	
38	6AW–15142–00	GUIDE 1	2	2	2	2	2	
39	95D95–06014	BOLT, FLANGE DEEP RECESS	4	4	4	4	4	
40	6CB–2134V–00	BRACKET	1	1	1	1	1	
41	90179–06M28	NUT	2	2	2	2	2	
42	6CB–11998–00	BRACKET 1	1	1	1	1	1	
43	6CB–11999–00	BRACKET 2	1	1	1	1	1	
44	6CB–42662–00	DAMPER	2	2	2	2	2	
45	90185–06M07	NUT, SELF-LOCKING	4	4	4	4	4	
46	94702–00400	PLUG, SPARK (NGK LFR6A-11)	6	6	6	6	6	

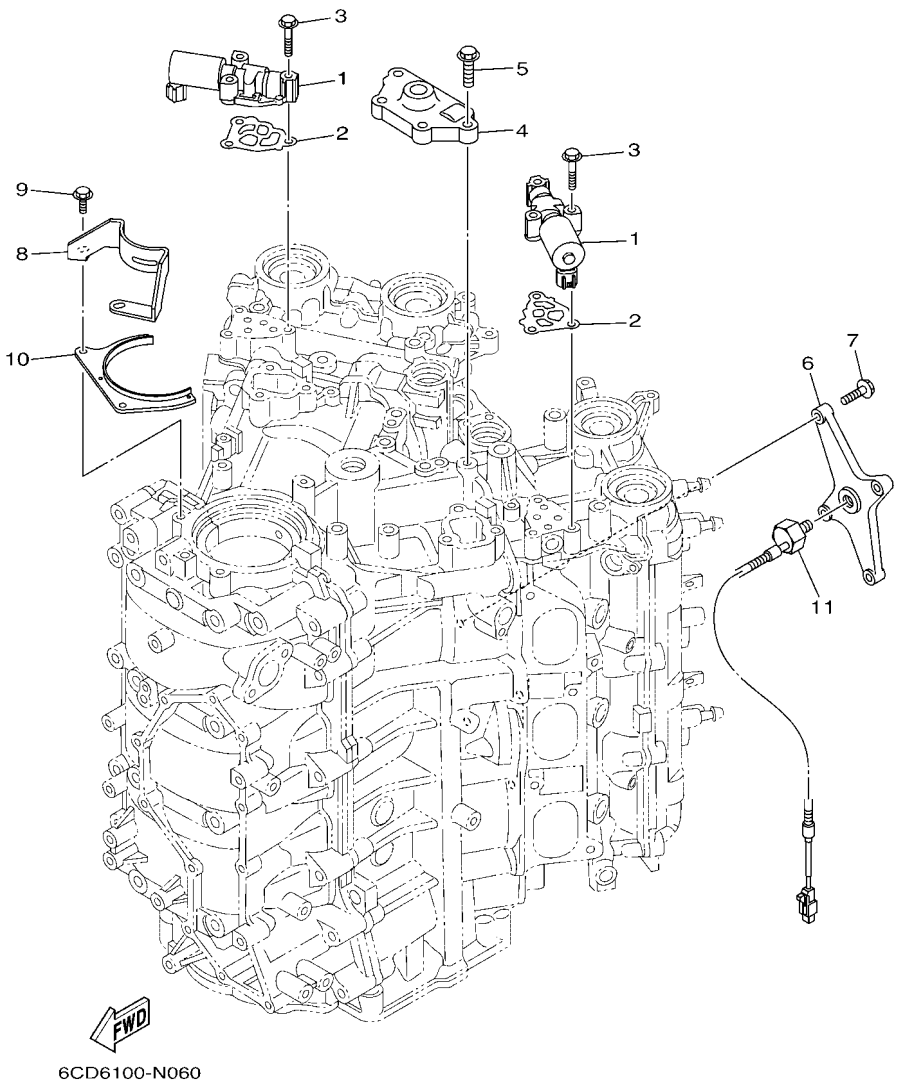

FIG. 6 CYLINDER & CRANKCASE 3

REF. NO.	PART NO.	DESCRIPTION	XCA	UCA	NCA	NCA2	NCA2	REMARKS
1	6CB–86120–00	SOLENOID VALVE ASSY	2	2	2	2	2	
2	6CB–1242F–00	GASKET, FILTER	2	2	2	2	2	
3	90105–06035	BOLT, FLANGE	6	6	6	6	6	
4	6CB–15544–00	STAY 1	1	1	1	1	1	
5	90105–08178	BOLT, FLANGE	4	4	4	4	4	
6	6CB–1135A–00	BRACKET	1	1	1	1	1	
7	90105–06037	BOLT, FLANGE	4	4	4	4	4	
8	6CB–15142–00	GUIDE 1	1	1	1	1	1	
9	95D95–06016	BOLT, FLANGE DEEP RECESS	2	2	2	2	2	
10	6CB–1149A–00	PLATE 1	1	1	1	1	1	
11	6P2–85780–00	SENSOR, KNOCK	1	1	1	1	1	

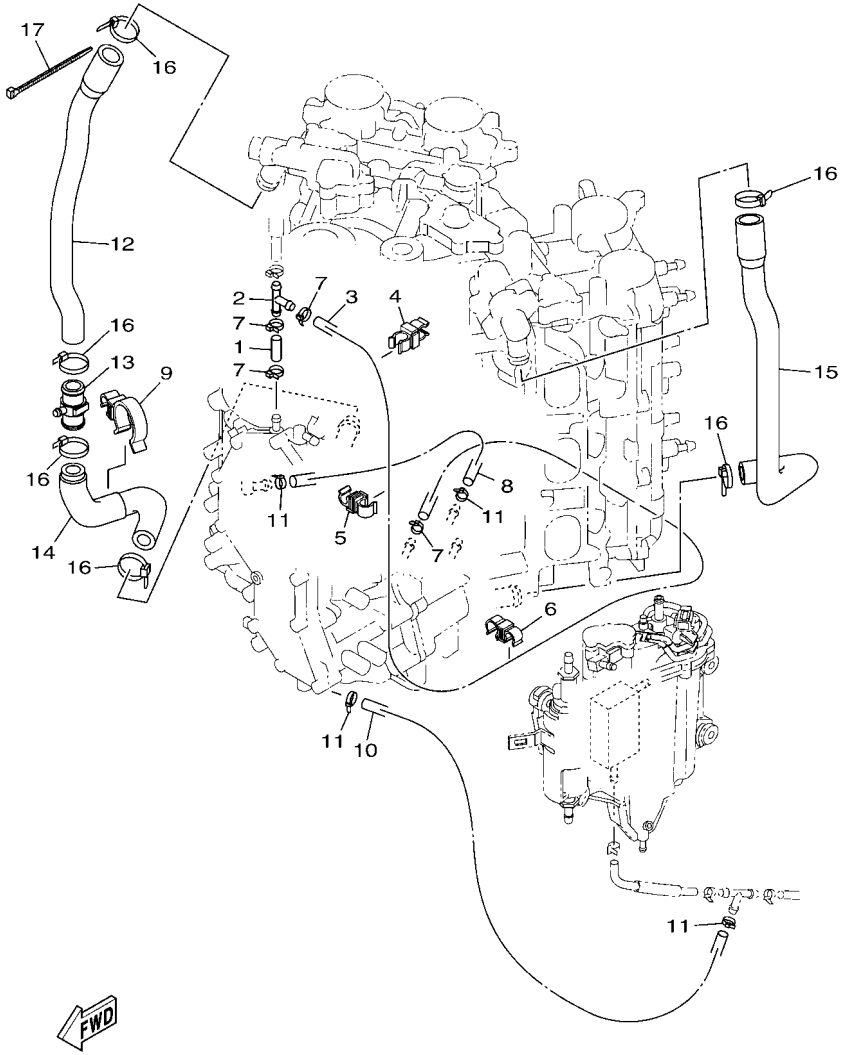

6JD1200-T070

FIG. 7 CYLINDER & CRANKCASE 4

REF. NO.	PART NO.	DESCRIPTION	XCA	UCA	NCA	NCA2	NCA2	REMARKS
1	90445–09220	HOSE (L30)	1	1	1	1	1	
2	688–24378–00	PIPE, JOINT 3	1	1	1	1	1	
3	6CB–12576–10	HOSE 1	1	1	1	1	1	
4	90464–10M59	CLAMP	1	1	1	1	1	
5	90464–09013	CLAMP	1	1	1	1	1	
6	90464–12010	CLAMP	1	1	1	1	1	
7	90465–11M10	CLAMP	4	4	4	4	4	
8	6CB–12577–00	HOSE 2	1	1	1	1	1	
9	90464–26002	CLAMP	1	1	1	1	1	
10	90445–096H2	HOSE (L280)	1	1	1	1	1	
11	90465–11M10	CLAMP	4	4	4	4	4	
12	6CE–1244G–00	HOSE, 4	1	1	1	1	1	
13	6CE–24378–00	PIPE, JOINT 3	1	1	1	1	1	
14	6CE–1244H–00	HOSE 5	1	1	1	1	1	
15	6CB–1243E–00	HOSE 2	1	1	1	1	1	
16	90465–11M59	CLAMP	6	6	6	6	6	
17	90465–14M66	CLAMP	1	1	1	1	1	

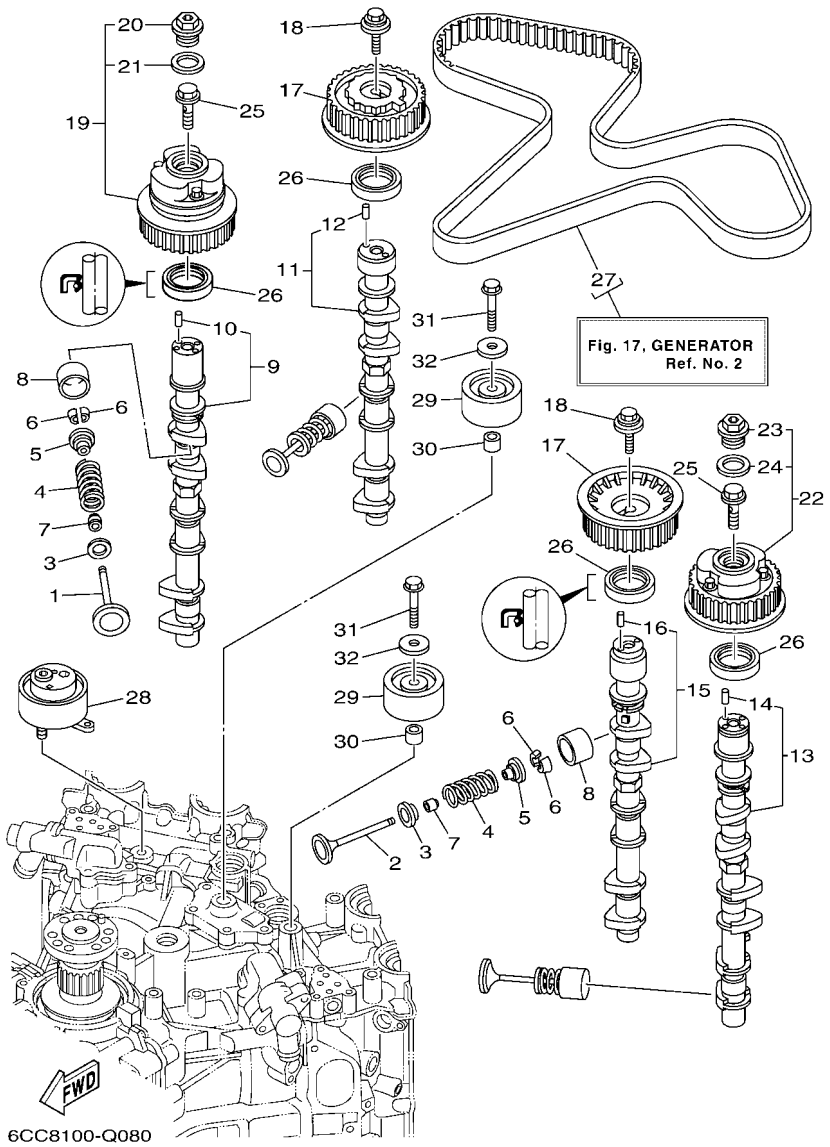

FIG. 8 VALVE

REF. NO.	PART NO.	DESCRIPTION	XCA	UCA	NCA	NCA2	NCA2	REMARKS
1	6CB–12111–00	VALVE, INTAKE	12	12	12	12	12	
2	6DA–12121–00	VALVE, EXHAUST	12	12	12	12	12	
3	K0F–A3743–00	SEAT, VALVE SPRING	24	24	24	24	24	
4	6CB–12113–00	SPRING, VALVE INNER	24	24	24	24	24	
5	K0F–A3741–00	RETAINER, VALVE SPRING	24	24	24	24	24	
6	K0F–A3742–00	LOCK, VALVE SPRING RETAINER	48	48	48	48	48	
7	51Y–12119–00	SEAL, VALVE STEM	24	24	24	24	24	
8	K0F–A3751–00	LIFTER, VALVE (3.000)	24	24	24	24	24	UR
	K0F–A3751–10	LIFTER, VALVE (3.025)	24	24	24	24	24	UR
	K0F–A3751–20	LIFTER, VALVE (3.050)	24	24	24	24	24	UR
	K0F–A3751–30	LIFTER, VALVE (3.075)	24	24	24	24	24	UR
	K0F–A3751–40	LIFTER, VALVE (3.100)	24	24	24	24	24	UR
	K0F–A3751–50	LIFTER, VALVE (3.122)	24	24	24	24	24	UR
	K0F–A3751–60	LIFTER, VALVE (3.142)	24	24	24	24	24	UR
	K0F–A3751–70	LIFTER, VALVE (3.162)	24	24	24	24	24	UR
	K0F–A3751–80	LIFTER, VALVE (3.182)	24	24	24	24	24	UR
	K0F–A3751–90	LIFTER, VALVE (3.202)	24	24	24	24	24	UR
	K0F–A3751–A0	LIFTER, VALVE (3.222)	24	24	24	24	24	UR
	K0F–A3751–B0	LIFTER, VALVE (3.242)	24	24	24	24	24	UR
	K0F–A3751–C0	LIFTER, VALVE (3.262)	24	24	24	24	24	UR
	K0F–A3751–D0	LIFTER, VALVE (3.282)	24	24	24	24	24	UR
	K0F–A3751–E0	LIFTER, VALVE (3.302)	24	24	24	24	24	UR
	K0F–A3751–F0	LIFTER, VALVE (3.322)	24	24	24	24	24	UR
	K0F–A3751–G0	LIFTER, VALVE (3.342)	24	24	24	24	24	UR
	K0F–A3751–H0	LIFTER, VALVE (3.362)	24	24	24	24	24	UR
	K0F–A3751–J0	LIFTER, VALVE (3.382)	24	24	24	24	24	UR
	K0F–A3751–K0	LIFTER, VALVE (3.402)	24	24	24	24	24	UR

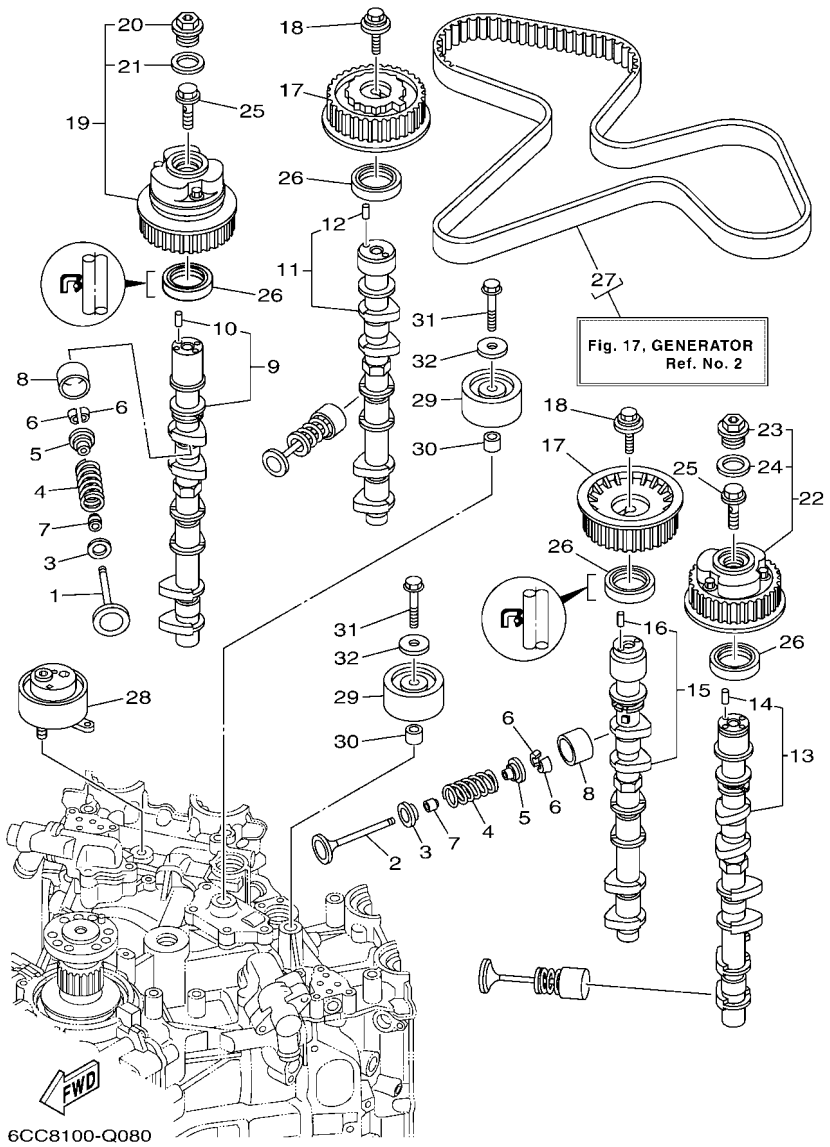

FIG. 8 VALVE

REF. NO.	PART NO.	DESCRIPTION	XCA	UCA	NCA	NCA2	NCA2	REMARKS
8	K0F–A3751–L0	LIFTER, VALVE (3.422)	24	24	24	24	24	UR
	K0F–A3751–M0	LIFTER, VALVE (3.442)	24	24	24	24	24	UR
	K0F–A3751–N0	LIFTER, VALVE (3.462)	24	24	24	24	24	UR
	K0F–A3751–P0	LIFTER, VALVE (3.482)	24	24	24	24	24	UR
	K0F–A3751–R0	LIFTER, VALVE (3.502)	24	24	24	24	24	UR
	K0F–A3751–S0	LIFTER, VALVE (3.522)	24	24	24	24	24	UR
	K0F–A3751–T0	LIFTER, VALVE (3.542)	24	24	24	24	24	UR
	K0F–A3753–00	LIFTER, VALVE (3.562)	24	24	24	24	24	UR
	K0F–A3753–10	LIFTER, VALVE (3.582)	24	24	24	24	24	UR
	K0F–A3753–20	LIFTER, VALVE (3.602)	24	24	24	24	24	UR
	K0F–A3753–30	LIFTER, VALVE (3.625)	24	24	24	24	24	UR
	K0F–A3753–40	LIFTER, VALVE (3.650)	24	24	24	24	24	UR
	K0F–A3753–50	LIFTER, VALVE (3.675)	24	24	24	24	24	UR
	K0F–A3753–60	LIFTER, VALVE (3.700)	24	24	24	24	24	UR
	K0F–A3753–70	LIFTER, VALVE (3.725)	24	24	24	24	24	UR
9	6CB–12171–00	CAMSHAFT 1	1	1	1	1	1	
10	93605–10108	.PIN, DOWEL	1	1	1	1	1	
11	6CB–12181–00	CAMSHAFT 2	1	1	1	1	1	
12	93605–10108	.PIN, DOWEL	1	1	1	1	1	
13	6CB–12172–00	CAMSHAFT 3	1	1	1	1	1	
14	93605–10108	.PIN, DOWEL	1	1	1	1	1	
15	6CB–12182–00	CAMSHAFT 4	1	1	1	1	1	
16	93605–10108	.PIN, DOWEL	1	1	1	1	1	
17	6CB–11567–00	GEAR, DRIVEN 2	2	2	2	2	2	
18	90119–10050	BOLT, WITH WASHER	2	2	2	2	2	
19	6CB–12645–01	PULLEY ASSY 1	1	1	1	1	1	
20	6P2–12623–00	.BOLT	1	1	1	1	1	

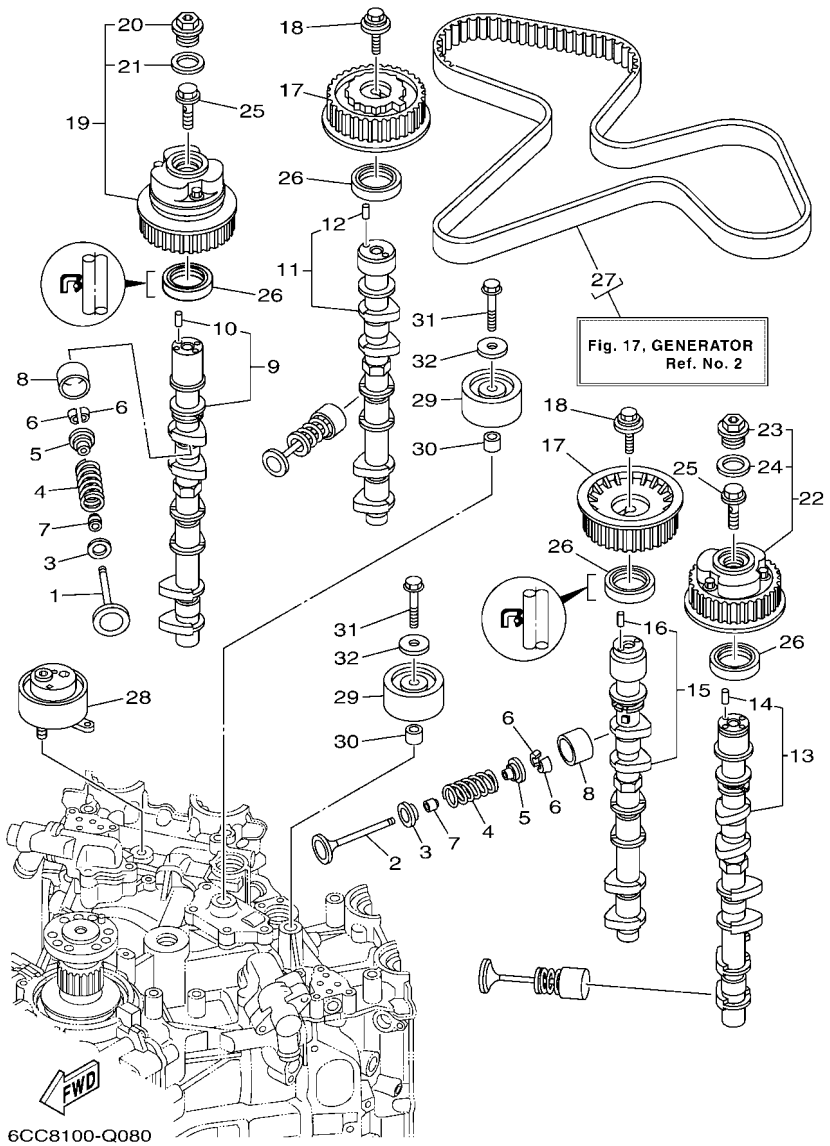

FIG. 8 VALVE

REF. NO.	PART NO.	DESCRIPTION	XCA	UCA	NCA	NCA2	NCA2	REMARKS
21	6P2–12663–00	.GASKET	1	1	1	1	1	
22	6CB–1264A–01	PULLEY ASSY 2	1	1	1	1	1	
23	6P2–12623–00	.BOLT	1	1	1	1	1	
24	6P2–12663–00	.GASKET	1	1	1	1	1	
25	6P2–12615–00	BOLT	2	2	2	2	2	
26	93102–38008	OIL SEAL	4	4	4	4	4	
27	6CB–W4624–00	BELT (WITH ROTOR BOLTS)	1	1	1	1	1	
28	6CB–11590–02	TENSIONER ASSY	1	1	1	1	1	
29	6CB–15512–00	GEAR, IDLER 1	2	2	2	2	2	
30	99530–14016	PIN, DOWEL	2	2	2	2	2	
31	90119–10M07	BOLT, WITH WASHER	2	2	2	2	2	
32	90201–10M01	WASHER, PLATE	2	2	2	2	2	

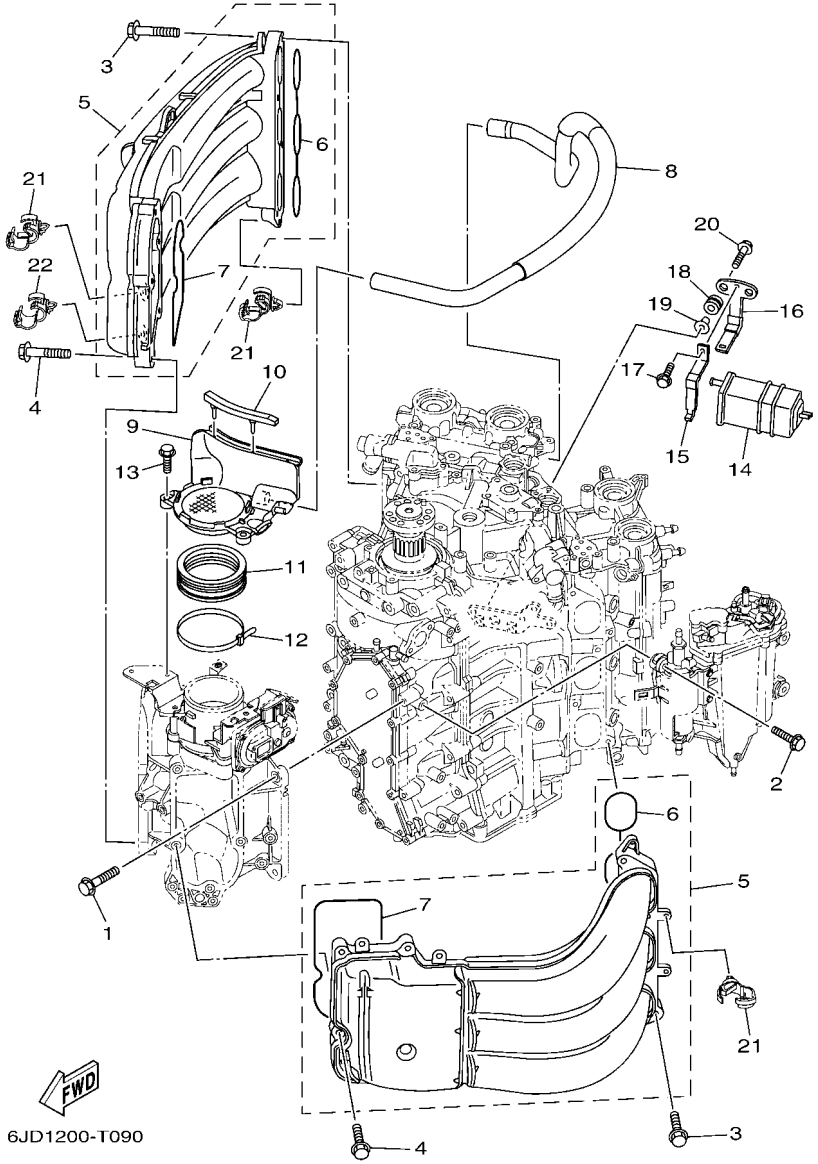

FIG. 9 INTAKE 1

REF. NO.	PART NO.	DESCRIPTION	XCA	UCA	NCA	NCA2	NCA2	REMARKS
1	95D75–08030	BOLT, FLANGE DEEP RECESS	4	4	4	4	4	
2	90119–06269	BOLT, WITH WASHER	4	4	4	4	4	
3	90119–08020	BOLT, WITH WASHER	8	8	8	8	8	
4	90105–06035	BOLT, FLANGE	10	10	10	10	10	
5	6CE–13641–00	MANIFOLD, INTAKE 1	2	2	2	2	2	
6	6CB–13645–00	.GASKET, MANIFOLD 1	1	1	1	1	1	
7	6CB–13646–00	.GASKET, MANIFOLD 2	1	1	1	1	1	
8	6CB–15373–01	PIPE, BREATHER	1	1	1	1	1	
9	6CB–14440–01	SILENCER ASSY, INTAKE	1	1	1	1	1	
10	6CB–85547–00	DAMPER	1	1	1	1	1	
11	6AW–1441J–00	PIPE, SILENCER	1	1	1	1	1	
12	90464–99004	CLAMP	1	1	1	1	1	
13	95D95–06020	BOLT, FLANGE DEEP RECESS	2	2	2	2	2	
14	69J–24170–00	CANISTER ASSY	1	1	1	1	1	
15	69J–2419A–01	HOLDER	1	1	1	1	1	
16	69J–2134X–00	BRACKET, CANISTER	1	1	1	1	1	
17	97E95–06516	BOLT, HEXAGON W/W DEEP RECESS	1	1	1	1	1	
18	90480–10M23	GROMMET	2	2	2	2	2	
19	90387–06289	COLLAR	2	2	2	2	2	
20	90119–06M17	BOLT, WITH WASHER	2	2	2	2	2	
21	90464–13249	CLAMP	8	8	8	8	8	
22	90464–20181	CLAMP	1	1	1	1	1	

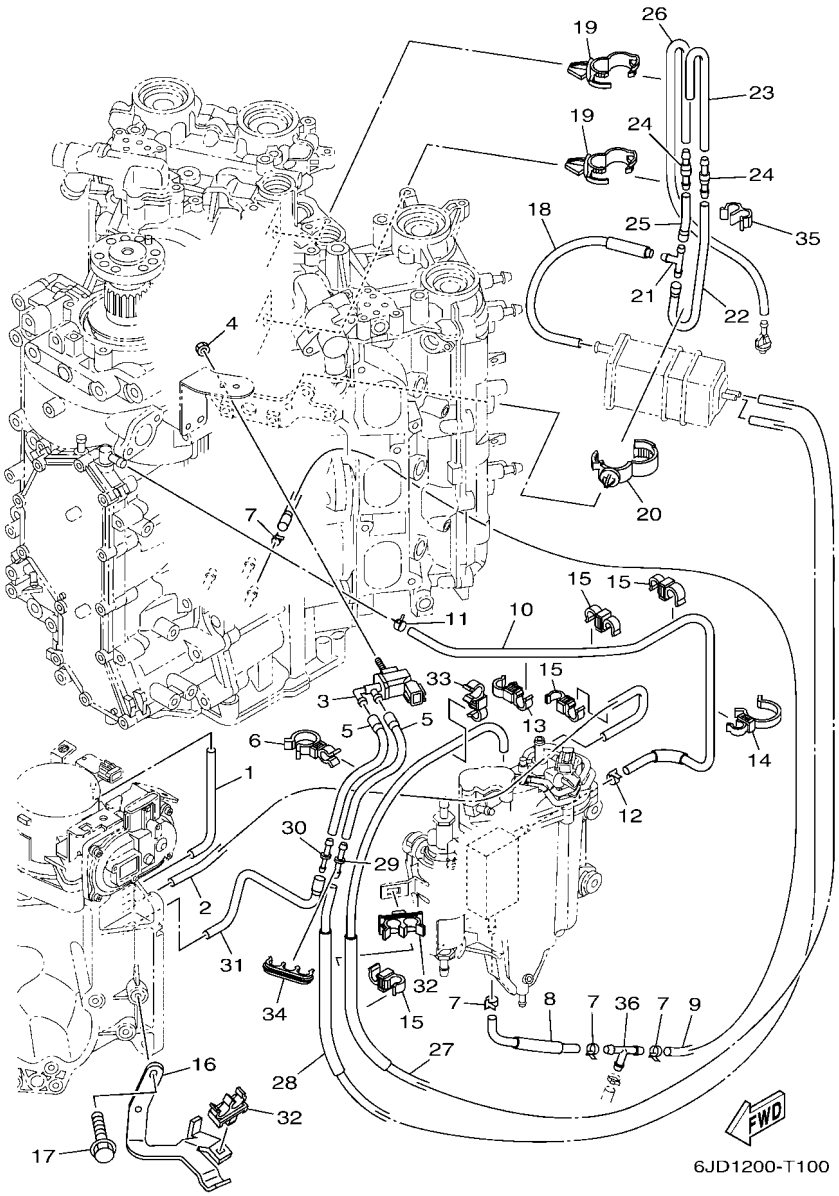

FIG. 10 INTAKE 2

REF. NO.	PART NO.	DESCRIPTION	XCA	UCA	NCA	NCA2	NCA2	REMARKS
1	6CB–13533–00	HOSE, VACUUM SENSING 4	1	1	1	1	1	
2	6CB–13532–10	HOSE, VACUUM SENSING 3	1	1	1	1	1	
3	6C5–86120–00	SOLENOID VALVE ASSY	1	1	1	1	1	
4	95380–06600	NUT, HEXAGON	1	1	1	1	1	
5	6CB–2416A–00	HOSE	2	2	2	2	2	
6	90464–23001	CLAMP	2	2	2	2	2	
7	90465–11M10	CLAMP	4	4	4	4	4	
8	6CE–12482–10	PIPE 2	1	1	1	1	1	
9	90445–097F7	HOSE (L780)	1	1	1	1	1	
10	6CB–12484–00	PIPE 4	1	1	1	1	1	
11	90467–090A0	CLIP	1	1	1	1	1	
12	90465–11M10	CLAMP	1	1	1	1	1	
13	90464–12010	CLAMP	1	1	1	1	1	
14	90464–26002	CLAMP	1	1	1	1	1	
15	90464–09013	CLAMP	4	4	4	4	4	
16	6CB–13782–00	STAY	1	1	1	1	1	
17	95D95–06016	BOLT, FLANGE DEEP RECESS	2	2	2	2	2	
18	6CB–13545–00	HOSE 1	1	1	1	1	1	
19	90464–20181	CLAMP	2	2	2	2	2	
20	90464–07209	CLAMP	1	1	1	1	1	
21	688–24378–00	PIPE, JOINT 3	1	1	1	1	1	
22	6CB–13546–01	HOSE 2	1	1	1	1	1	
23	6CB–13547–00	HOSE 3	1	1	1	1	1	
24	6E5–21744–00	BREATHER	2	2	2	2	2	
25	6CB–13548–00	HOSE, AIR 4	1	1	1	1	1	
26	6CB–12483–01	PIPE 3	1	1	1	1	1	
27	6CB–1475A–00	PIPE 1	1	1	1	1	1	

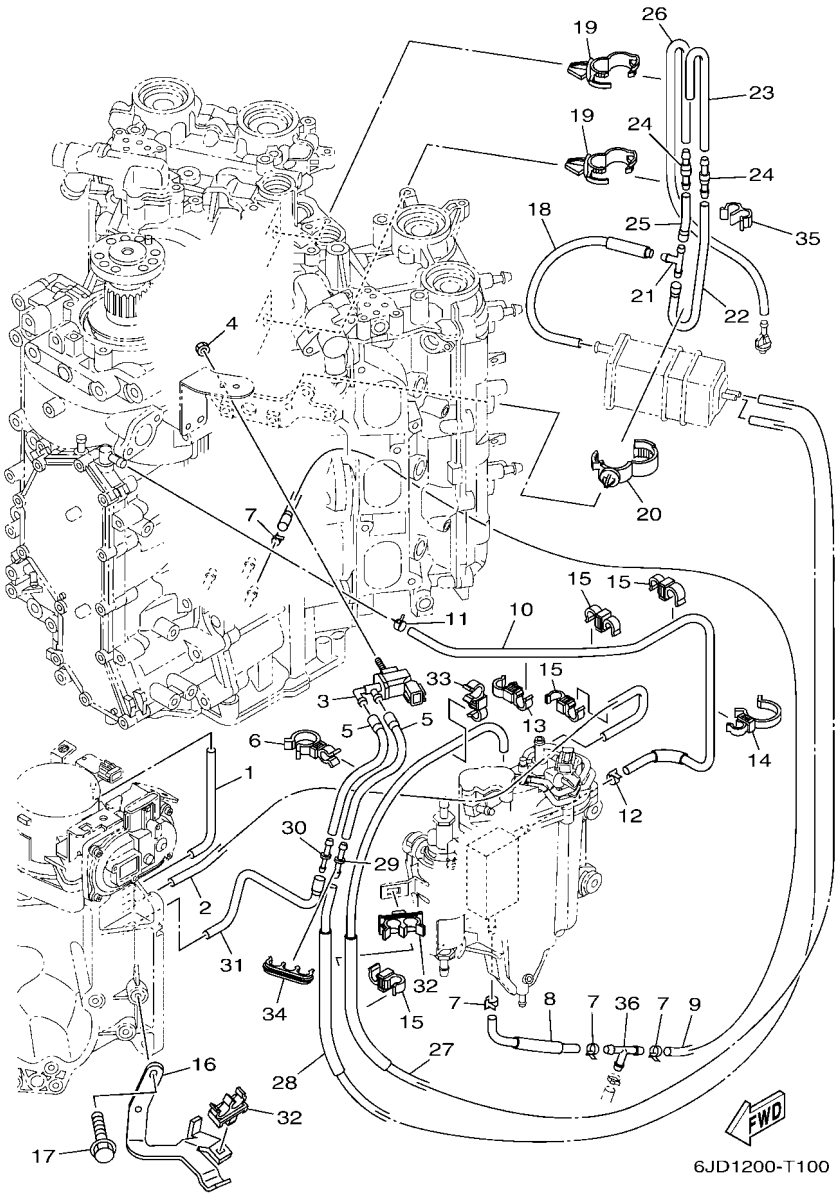

FIG. 10 INTAKE 2

REF. NO.	PART NO.	DESCRIPTION	XCA	UCA	NCA	NCA2	NCA2	REMARKS
28	6CB–1475F–00	PIPE 3	1	1	1	1	1	
29	6G8–24376–00	PIPE, JOINT 1	1	1	1	1	1	
30	6EK–14989–00	ORIFICE, AIR VENT	1	1	1	1	1	
31	6CB–1475G–10	PIPE 4	1	1	1	1	1	
32	90464–11012	CLAMP	2	2	2	2	2	
33	90464–12010	CLAMP	1	1	1	1	1	
34	90464–10011	CLAMP	1	1	1	1	1	
35	90464–07M20	CLAMP	1	1	1	1	1	
36	688–24378–00	PIPE, JOINT 3	1	1	1	1	1	

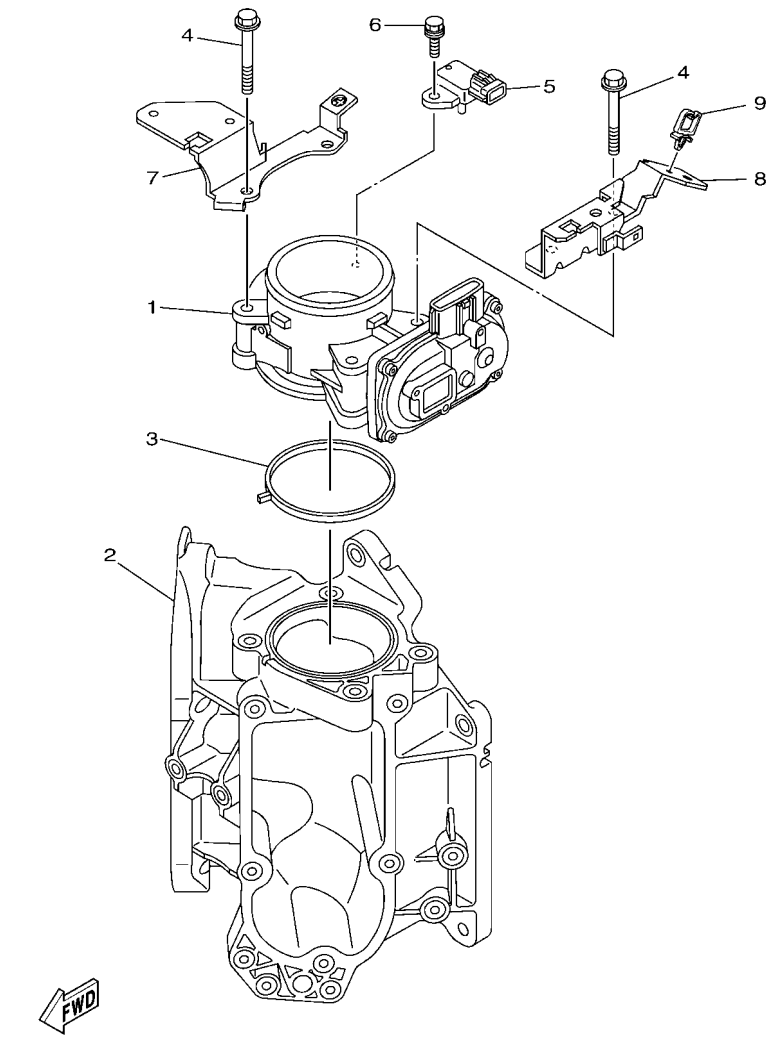

FIG. 11 THROTTLE BODY ASSY 1

REF. NO.	PART NO.	DESCRIPTION	XCA	UCA	NCA	NCA2	NCA2	REMARKS
1	6CB–13751–10	BODY, THROTTLE 1	1	1	1	1	1	
2	6CB–13711–00	MIXING BODY	1	1	1	1	1	
3	6CB–13556–00	GASKET, MANIFOLD	1	1	1	1	1	
4	95D75–08060	BOLT, FLANGE DEEP RECESS	4	4	4	4	4	
5	6P2–82380–00	SENSOR, PRESSURE	1	1	1	1	1	
6	97E75–06620	BOLT, HEXAGON W/W DEEP RECESS	1	1	1	1	1	
7	6CB–13898–20	HOLDER	1	1	1	1	1	
8	6CB–13898–11	HOLDER	1	1	1	1	1	
9	90464–08004	CLAMP	1	1	1	1	1	

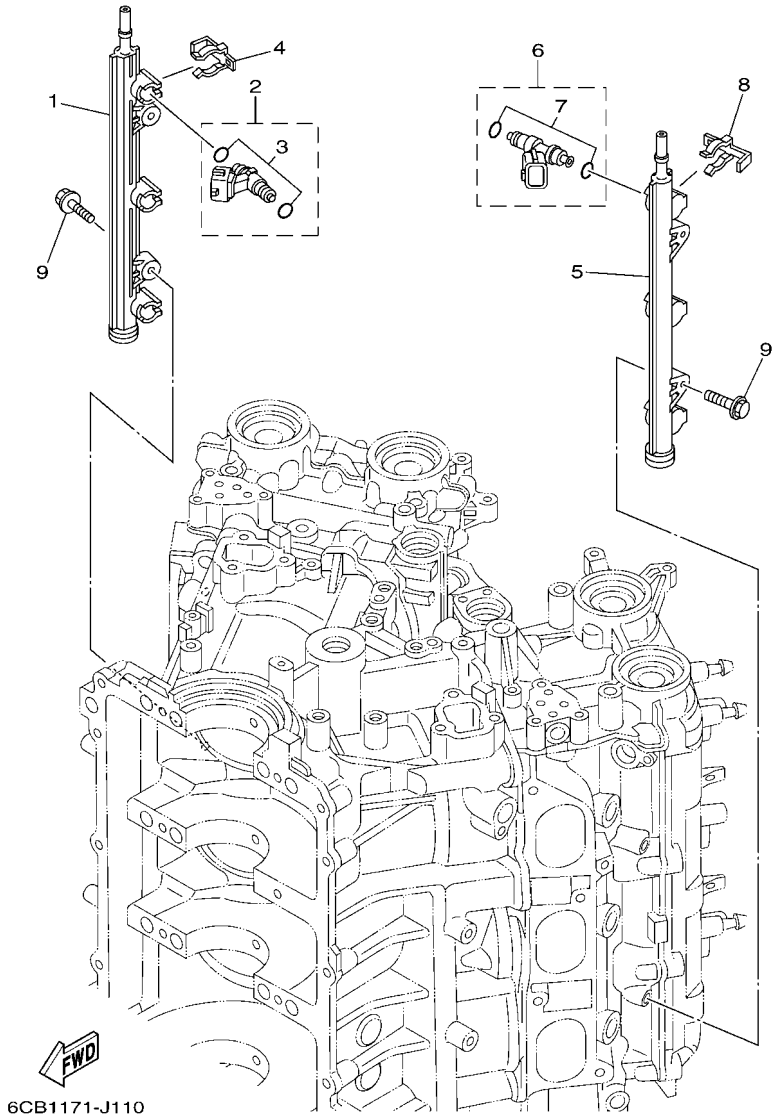

FIG. 12 THROTTLE BODY ASSY 2

REF. NO.	PART NO.	DESCRIPTION	XCA	UCA	NCA	NCA2	NCA2	REMARKS
1	6CB–13161–10	PIPE, DELIVERY 1	1	1	1	1	1	
2	6AW–13761–00	INJECTOR	3	3	3	3	3	
3	6AW–1410B–00	.PACKING KIT	1	1	1	1	1	
4	6CB–13577–00	CLIP	3	3	3	3	3	
5	6CB–13171–10	PIPE, DELIVERY 2	1	1	1	1	1	
6	6AW–13761–00	INJECTOR	3	3	3	3	3	
7	6AW–1410B–00	.PACKING KIT	1	1	1	1	1	
8	6CB–13577–00	CLIP	3	3	3	3	3	
9	90105–06M08	BOLT, FLANGE	4	4	4	4	4	

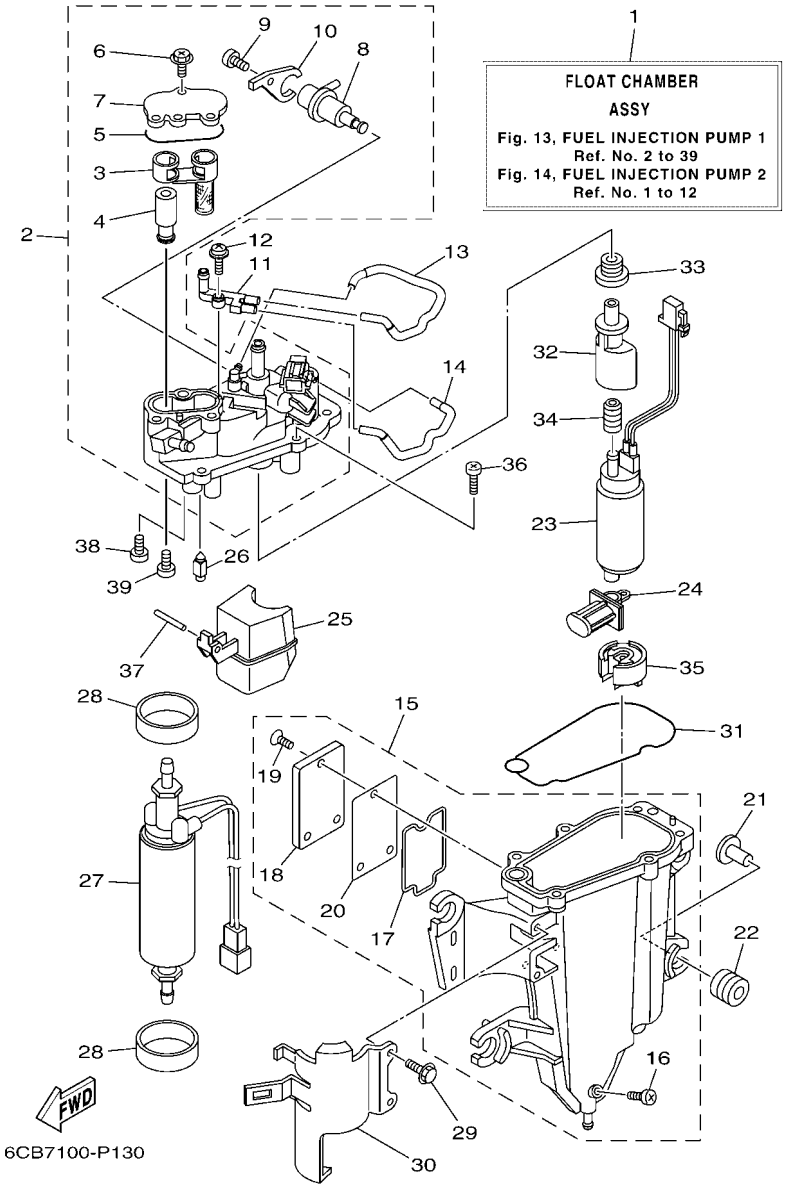

FIG. 13 FUEL INJECTION PUMP 1

REF. NO.	PART NO.	DESCRIPTION	XCA	UCA	NCA	NCA2	NCA2	REMARKS
1	6CB–14180–12	FLOAT CHAMBER ASSY	1	1	1	1	1	
2	6CB–14182–02	COVER, FLOAT CHAMBER	1	1	1	1	1	
3	6CB–24501–01	.FILTER, FUEL	1	1	1	1	1	
4	6CB–24460–00	.RELIEF VALVE ASSY	1	1	1	1	1	
5	6CB–13016–00	.O-RING	1	1	1	1	1	
6	6CB–14216–00	.SCREW	3	3	3	3	3	
7	6CB–24217–00	.COVER	1	1	1	1	1	
8	6CB–13906–01	.REGULATOR, PRESSURE	1	1	1	1	1	
9	6CB–14564–00	.SCREW	1	1	1	1	1	
10	6CB–14146–00	.PLATE	1	1	1	1	1	
11	68V–24379–10	PIPE, JOINT 4	1	1	1	1	1	
12	68V–14216–00	SCREW	1	1	1	1	1	
13	6CB–1475H–00	PIPE 5	1	1	1	1	1	
14	6CB–1475J–00	PIPE 6	1	1	1	1	1	
15	6CB–14181–01	BODY, FLOAT CHAMBER 1	1	1	1	1	1	
16	6P2–14191–00	.PLUG, DRAIN	1	1	1	1	1	
17	6CB–14239–00	.SEAL	1	1	1	1	1	
18	6CB–24452–10	.COVER	1	1	1	1	1	
19	6CB–14429–01	.SCREW	3	3	3	3	3	
20	6CB–24482–00	.GASKET 1	1	1	1	1	1	
21	63P–13716–00	COLLAR	4	4	4	4	4	
22	6CB–13593–00	DAMPER	4	4	4	4	4	
23	6CB–13907–11	FUEL PUMP COMP.	1	1	1	1	1	
24	63P–13915–00	FILTER	1	1	1	1	1	
25	6CB–14985–00	FLOAT	1	1	1	1	1	
26	6CB–14546–00	VALVE, NEEDLE	1	1	1	1	1	
27	6CB–24410–01	FUEL PUMP ASSY	1	1	1	1	1	

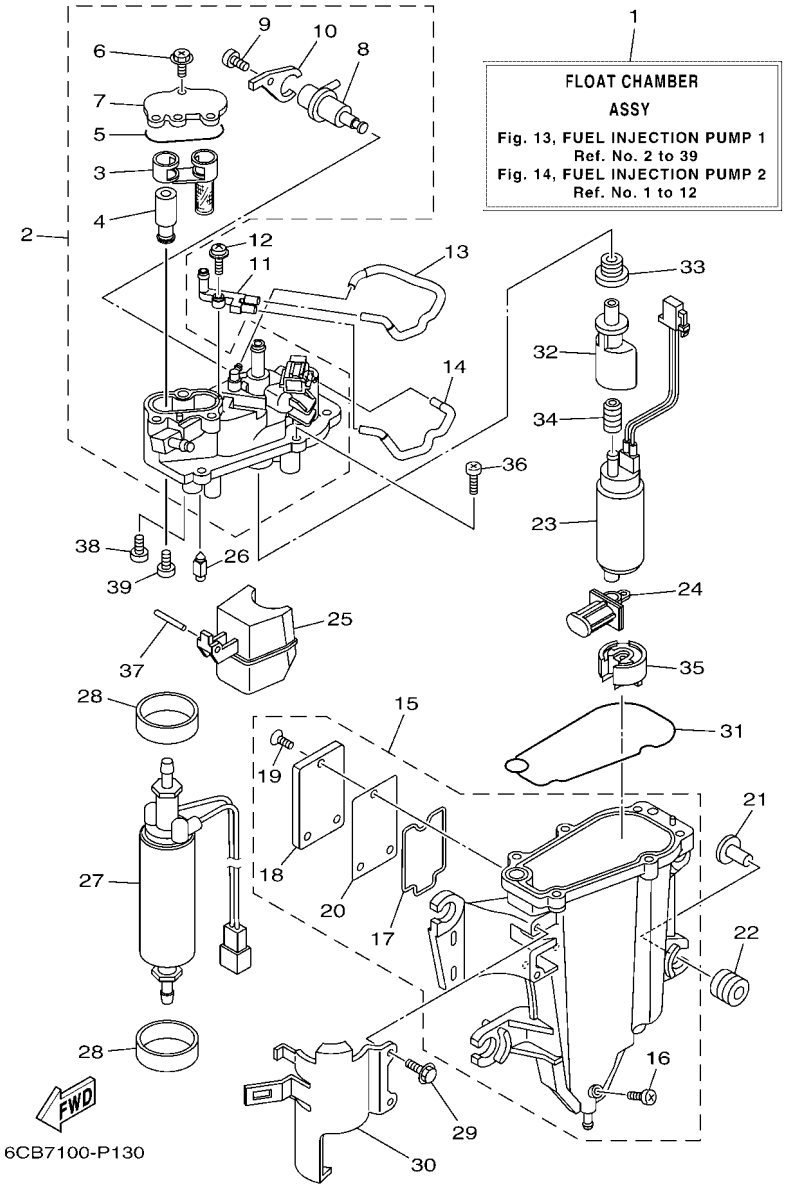

FIG. 13 FUEL INJECTION PUMP 1

REF. NO.	PART NO.	DESCRIPTION	XCA	UCA	NCA	NCA2	NCA2	REMARKS
28	6CB–24492–00	BUSH, FUEL PUMP	2	2	2	2	2	
29	6CB–24592–00	BOLT	2	2	2	2	2	
30	6CB–24491–00	BRACKET, FUEL PUMP	1	1	1	1	1	
31	6CB–14984–00	GASKET, FLOAT CHAMBER	1	1	1	1	1	
32	6AW–13132–00	JOINT	1	1	1	1	1	
33	6CB–1447B–00	BUSH 1	1	1	1	1	1	
34	6AW–13781–00	DAMPER, PUMP	1	1	1	1	1	
35	6AW–13784–00	COVER, PUMP	1	1	1	1	1	
36	63P–14567–00	SCREW	6	6	6	6	6	
37	6P2–14386–00	PIN, FLOAT	1	1	1	1	1	
38	4SV–24453–00	SCREW	1	1	1	1	1	
39	98507–04008	SCREW, PAN HEAD	1	1	1	1	1	

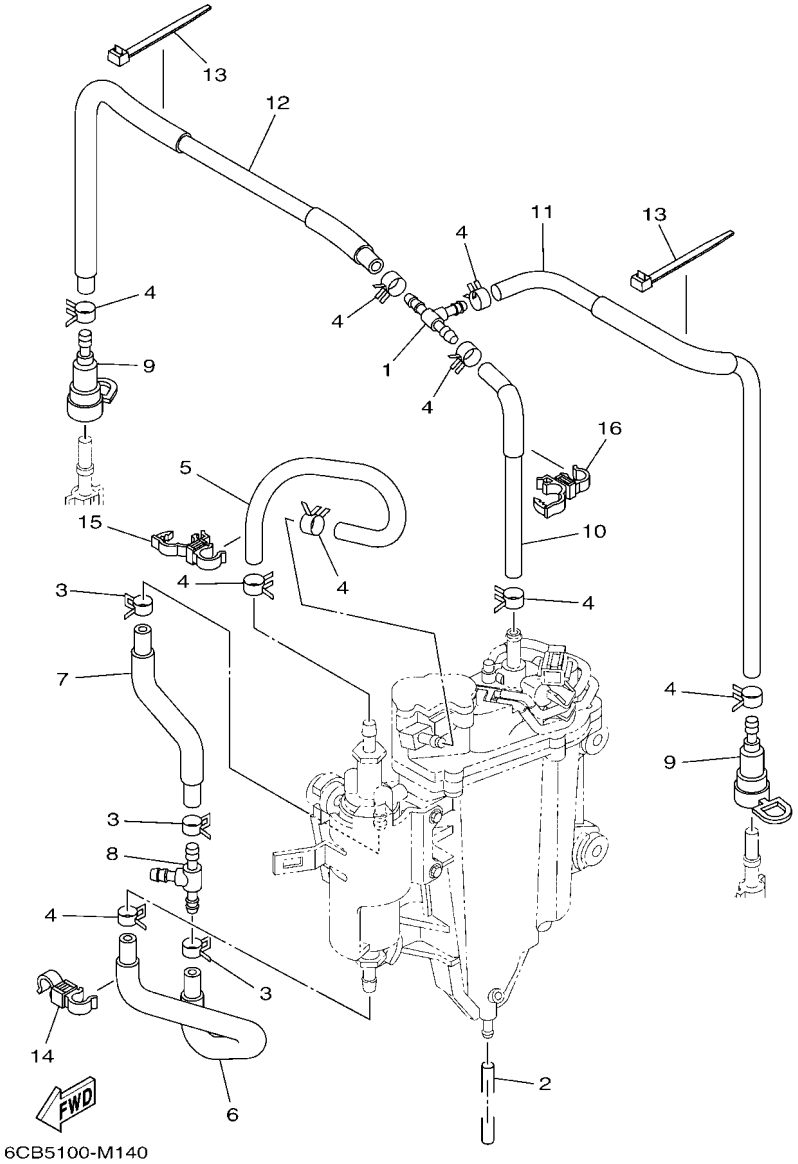

FIG. 14 FUEL INJECTION PUMP 2

REF. NO.	PART NO.	DESCRIPTION	XCA	UCA	NCA	NCA2	NCA2	REMARKS
1	6CB–24461–00	PIPE, JOINT	1	1	1	1	1	
2	6P2–14149–00	PIPE	1	1	1	1	1	
3	69J–14137–00	CLIP	3	3	3	3	3	
4	68V–13577–00	CLIP	9	9	9	9	9	
5	6CB–24324–00	PIPE 13	1	1	1	1	1	
6	6CB–24317–00	PIPE 7	1	1	1	1	1	
7	6CB–24323–00	PIPE 12	1	1	1	1	1	
8	6E5–24378–00	PIPE, JOINT 3	1	1	1	1	1	
9	60E–24300–01	FUEL PIPE JOINT	2	2	2	2	2	
10	6CB–13971–01	PIPE, FUEL 1	1	1	1	1	1	
11	6CB–13974–01	PIPE, FUEL 4	1	1	1	1	1	
12	6CB–13972–00	PIPE, FUEL 2	1	1	1	1	1	
13	90465–14M66	CLAMP	2	2	2	2	2	
14	90464–12009	CLAMP	1	1	1	1	1	
15	90464–12012	CLAMP	1	1	1	1	1	
16	90464–12012	CLAMP	1	1	1	1	1	

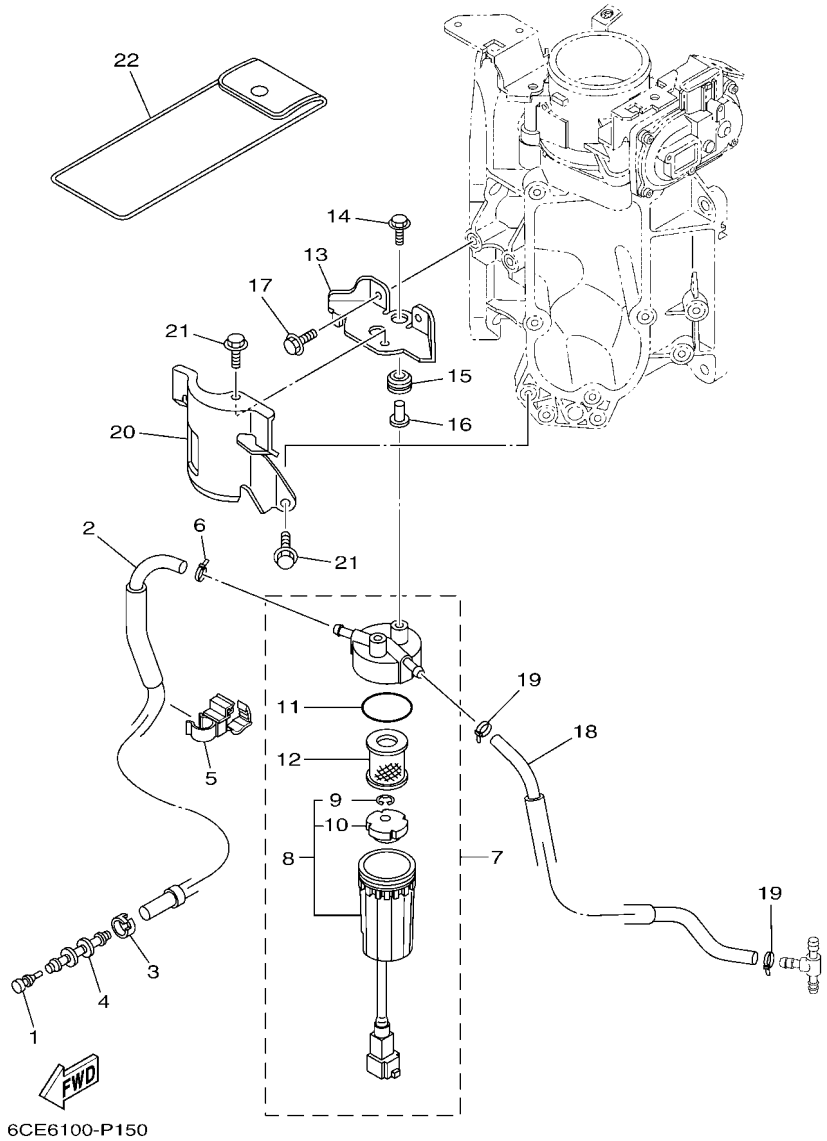

FIG. 15 FUEL 1

REF. NO.	PART NO.	DESCRIPTION	XCA	UCA	NCA	NCA2	NCA2	REMARKS
1	689–85547–00	DAMPER	1	1	1	1	1	
2	6CB–24314–11	PIPE 4	1	1	1	1	1	
3	6E5–24351–51	BAND 1	1	1	1	1	1	
4	6AW–24377–01	PIPE, JOINT 2	1	1	1	1	1	
5	90464–12012	CLAMP	1	1	1	1	1	
6	90465–11M10	CLAMP	1	1	1	1	1	
7	6P3–24560–22	FILTER ASSY	1	1	1	1	1	
8	6P3–24562–21	.CUP, FILTER	1	1	1	1	1	
9	6P3–24519–00	..CLIP	1	1	1	1	1	
10	6P3–24469–00	..FLOAT, WATER LEVEL	1	1	1	1	1	
11	6P3–24564–00	.GASKET	1	1	1	1	1	
12	6P3–24563–01	.ELEMENT, FILTER	1	1	1	1	1	
13	6CB–24566–00	BRACKET, FILTER	1	1	1	1	1	
14	90119–06M17	BOLT, WITH WASHER	2	2	2	2	2	
15	90480–10M23	GROMMET	2	2	2	2	2	
16	90387–06289	COLLAR	2	2	2	2	2	
17	95D95–06016	BOLT, FLANGE DEEP RECESS	2	2	2	2	2	
18	6CB–24313–10	PIPE 3	1	1	1	1	1	
19	90465–11M10	CLAMP	2	2	2	2	2	
20	6CB–24596–01	COVER	1	1	1	1	1	
21	95D95–06014	BOLT, FLANGE DEEP RECESS	2	2	2	2	2	
22	69J–28100–02	TOOL KIT	1	1	1	1	1	AP

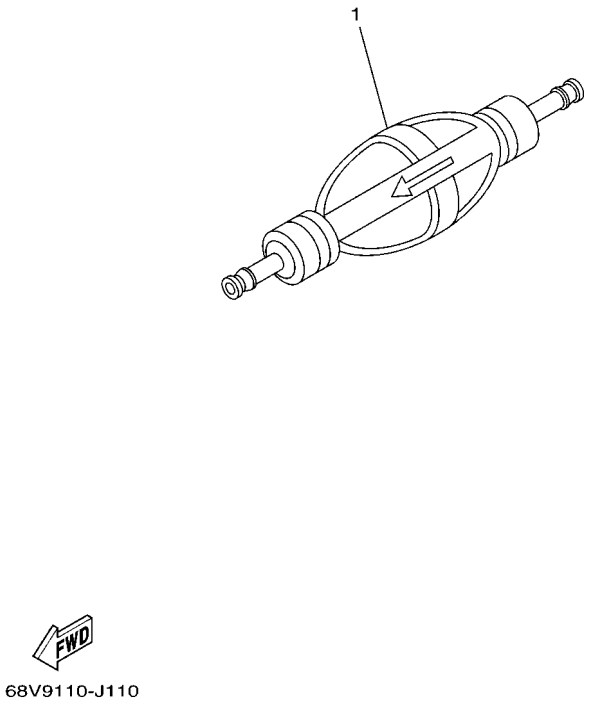

FIG. 16 FUEL 2

REF. NO.	PART NO.	DESCRIPTION	XCA	UCA	NCA	NCA2	NCA2	REMARKS
1	6AW–24360–01	PRIMER PUMP ASSY	1	1	1	1	1	AP

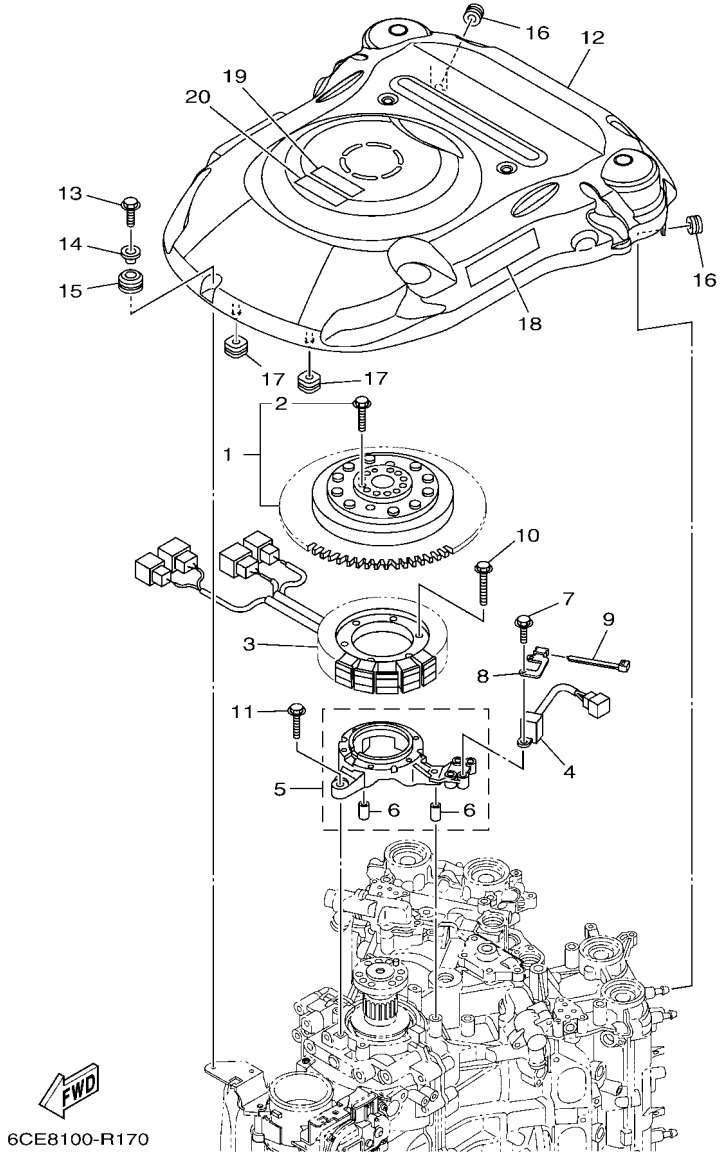

FIG. 17 GENERATOR

REF. NO.	PART NO.	DESCRIPTION	XCA	UCA	NCA	NCA2	NCA2	REMARKS
1	6CE–W8145–01	ROTOR ASSY WITH BOLTS	1	1	1	1	1	
2	6EK–W9010–00	.BOLT SET	1	1	1	1	1	
3	6CE–81410–00	STATOR ASSY	1	1	1	1	1	
4	6CB–85580–00	COIL, PULSER	1	1	1	1	1	
5	6CB–85561–00	BASE, MAGNETO	1	1	1	1	1	
6	99530–08012	.PIN, DOWEL	2	2	2	2	2	
7	97595–05520	BOLT, WITH WASHER	2	2	2	2	2	
8	6CE–85592–00	STAY, PULSER	1	1	1	1	1	
9	90465–11M10	CLAMP	1	1	1	1	1	
10	95022–06035	BOLT, FLANGE	6	6	6	6	6	
11	95D95–06030	BOLT, FLANGE DEEP RECESS	4	4	4	4	4	
12	6CE–81337–01	COVER, FLYWHEEL	1	1	1	1	1	
13	95D95–06020	BOLT, FLANGE DEEP RECESS	1	1	1	1	1	
14	90387–06285	COLLAR	1	1	1	1	1	
15	90480–15M31	GROMMET	1	1	1	1	1	
16	90480–12314	GROMMET	2	2	2	2	2	
17	6CB–85516–00	SPACER	2	2	2	2	2	
18	6CE–13437–61	MARK, CAUTION	1	1	1	1	1	
19	6EE–81994–40	LABEL, SAFETY	1	1	1	1	1	
20	6EE–81994–50	LABEL, SAFETY	1	1	1	1	1	

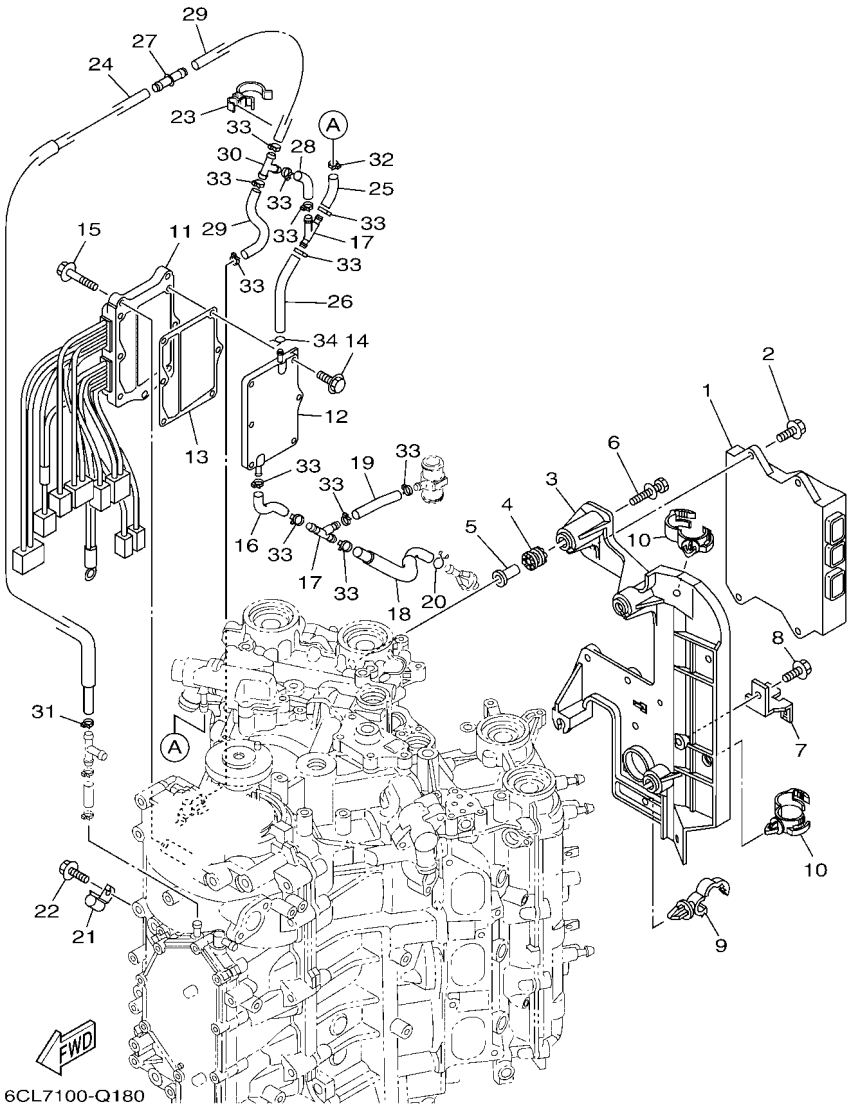

FIG. 18 ELECTRICAL 1

REF. NO.	PART NO.	DESCRIPTION	XCA	UCA	NCA	NCA2	NCA2	REMARKS
1	6CE–8591A–13	ENGINE CONTROL UNIT ASSY	1	1	1	1	1	
2	95D95–06020	BOLT, FLANGE DEEP RECESS	4	4	4	4	4	
3	6CB–82316–01	BRACKET, IGNITION COIL	1	1	1	1	1	
4	64J–85516–00	SPACER	4	4	4	4	4	
5	69M–42758–01	COLLAR	4	4	4	4	4	
6	90119–06293	BOLT, WITH WASHER	4	4	4	4	4	
7	6BR–81845–00	PLATE	1	1	1	1	1	
8	95D95–06012	BOLT, FLANGE DEEP RECESS	1	1	1	1	1	
9	90464–13249	CLAMP	1	1	1	1	1	
10	90464–20181	CLAMP	2	2	2	2	2	
11	6CE–81960–10	RECTIFIER & REGULATOR ASSY	1	1	1	1	1	
12	6CE–81972–00–9S	COVER, RECTIFIER	1	1	1	1	1	
13	6CE–81975–00	PLATE, RECTIFIER FITTING	1	1	1	1	1	
14	90119–06MA3	BOLT, WITH WASHER	6	6	6	6	6	
15	95D95–06025	BOLT, FLANGE DEEP RECESS	3	3	3	3	3	
16	6CE–1248A–00	PIPE 8	1	1	1	1	1	
17	6CE–24377–00	PIPE, JOINT 2	2	2	2	2	2	
18	6CE–12483–00	PIPE 3	1	1	1	1	1	
19	90445–107A5	HOSE (L30)	1	1	1	1	1	
20	90467–08M18	CLIP	1	1	1	1	1	
21	90462–06013	CLAMP	1	1	1	1	1	
22	95023–06012	BOLT	1	1	1	1	1	
23	90464–26002	CLAMP	1	1	1	1	1	
24	6CE–12481–10	PIPE 1	1	1	1	1	1	
25	6CE–14872–00	PIPE 2	1	1	1	1	1	
26	6CE–12485–00	PIPE 5	1	1	1	1	1	
27	6CE–24376–01	PIPE, JOINT 1	1	1	1	1	1	

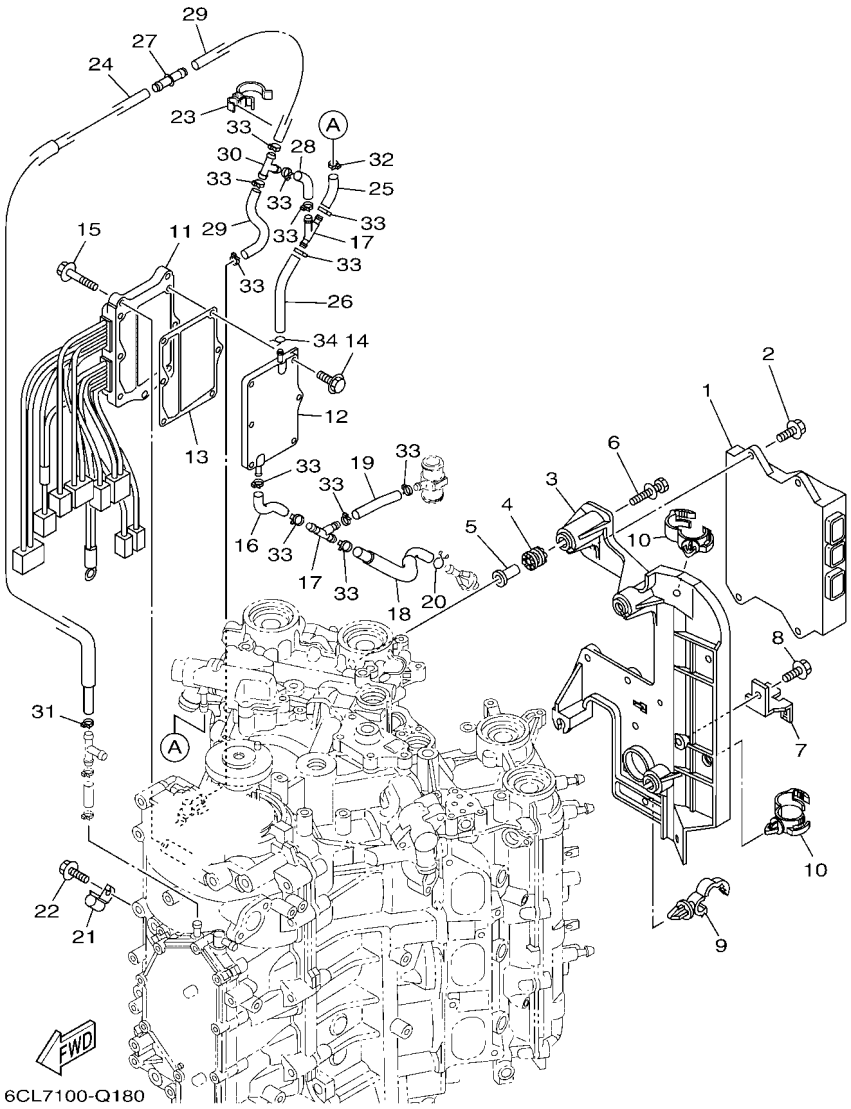

FIG. 18 ELECTRICAL 1

REF. NO.	PART NO.	DESCRIPTION	XCA	UCA	NCA	NCA2	NCA2	REMARKS
28	6CE–14872–00	PIPE 2	1	1	1	1	1	
29	90445–09068	HOSE (L110)	2	2	2	2	2	
30	688–24378–00	PIPE, JOINT 3	1	1	1	1	1	
31	90465–11M10	CLAMP	1	1	1	1	1	
32	90465–11M10	CLAMP	1	1	1	1	1	
33	90465–11M10	CLAMP	12	12	12	12	12	
34	90467–08004	CLIP	1	1	1	1	1	

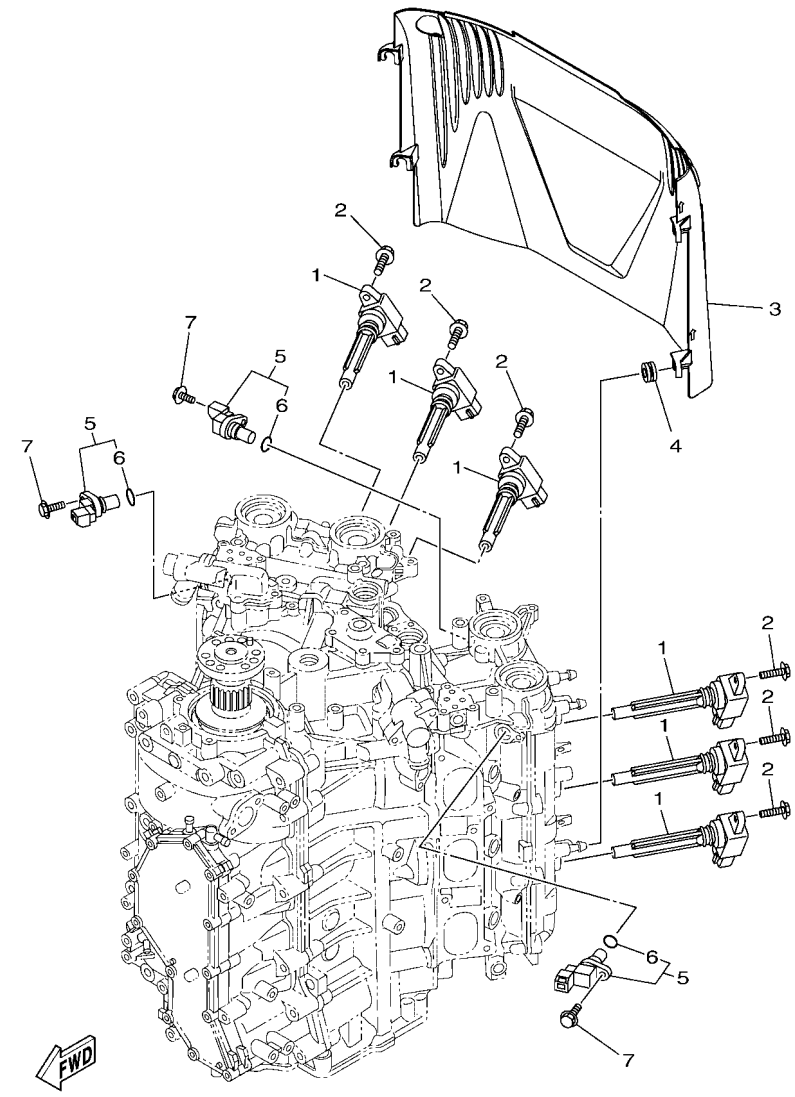

6CE8100-R190

FIG. 19 ELECTRICAL 2

REF. NO.	PART NO.	DESCRIPTION	XCA	UCA	NCA	NCA2	NCA2	REMARKS
1	6CB–82310–00	IGNITION COIL ASSY	6	6	6	6	6	
2	95D95–06025	BOLT, FLANGE DEEP RECESS	6	6	6	6	6	
3	6CB–82314–00	COVER, IGNITION COIL	1	1	1	1	1	
4	90480–12314	GROMMET	4	4	4	4	4	
5	6P2–85896–00	SENSOR, CAM POSITION	3	3	3	3	3	
6	6P2–85075–00	.O-RING	1	1	1	1	1	
7	97E95–06520	BOLT, HEXAGON W/W DEEP RECESS	3	3	3	3	3	

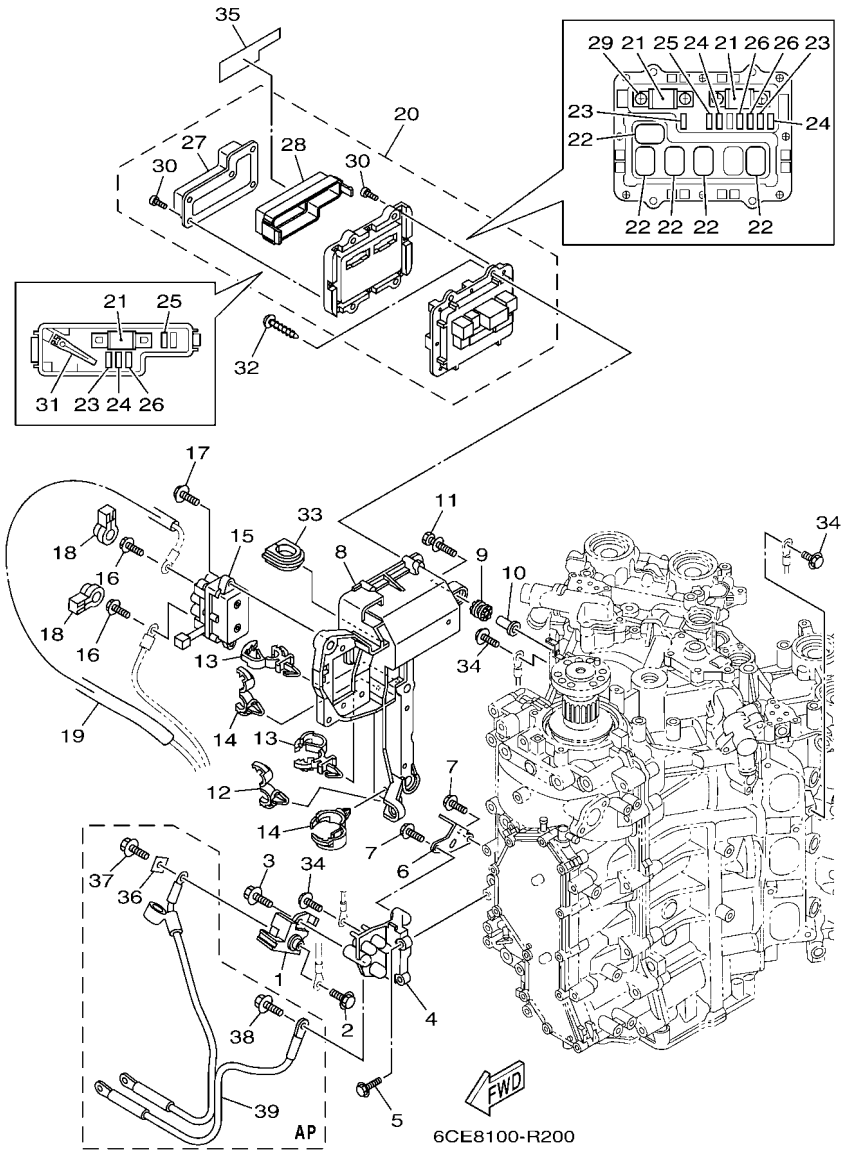

FIG. 20 ELECTRICAL 3

REF. NO.	PART NO.	DESCRIPTION	XCA	UCA	NCA	NCA2	NCA2	REMARKS
1	6P2–81925–01	TERMINAL	1	1	1	1	1	
2	95D95–08016	BOLT, FLANGE DEEP RECESS	1	1	1	1	1	
3	95814–08020	BOLT, FLANGE	1	1	1	1	1	
4	6CB–81929–00	BRACKET, TERMINAL	1	1	1	1	1	
5	95D95–06020	BOLT, FLANGE DEEP RECESS	2	2	2	2	2	
6	6CE–82588–00	PLATE	1	1	1	1	1	
7	95D95–06016	BOLT, FLANGE DEEP RECESS	2	2	2	2	2	
8	6CB–81948–02	BRACKET	1	1	1	1	1	
9	64J–85516–00	SPACER	5	5	5	5	5	
10	69M–42758–01	COLLAR	5	5	5	5	5	
11	90119–06293	BOLT, WITH WASHER	5	5	5	5	5	
12	90464–13249	CLAMP	1	1	1	1	1	
13	90464–12183	CLAMP	2	2	2	2	2	
14	90464–20181	CLAMP	2	2	2	2	2	
15	6AW–81950–00	RELAY ASSY	1	1	1	1	1	
16	97E95–06610	BOLT, HEXAGON W/W DEEP RECESS	2	2	2	2	2	
17	97513–06520	BOLT, WITH WASHER	2	2	2	2	2	
18	6P2–8183X–00	CAP, TERMINAL	2	2	2	2	2	
19	90446–15003	HOSE (L100)	1	1	1	1	1	
20	6CE–82170–11	FUSE BOX ASSY	1	1	1	1	1	
21	6CE–82151–00	.FUSE (100A)	3	3	3	3	3	
22	6AW–8195A–00	.RELAY ASSY	5	5	5	5	5	
23	67F–82151–40	.FUSE (10A)	3	3	3	3	3	
24	67F–82151–50	.FUSE (15A)	3	3	3	3	3	
25	67F–82151–00	.FUSE (20A)	2	2	2	2	2	
26	67F–82151–10	.FUSE (30A)	3	3	3	3	3	
27	6CB–81639–10	.COVER	1	1	1	1	1	

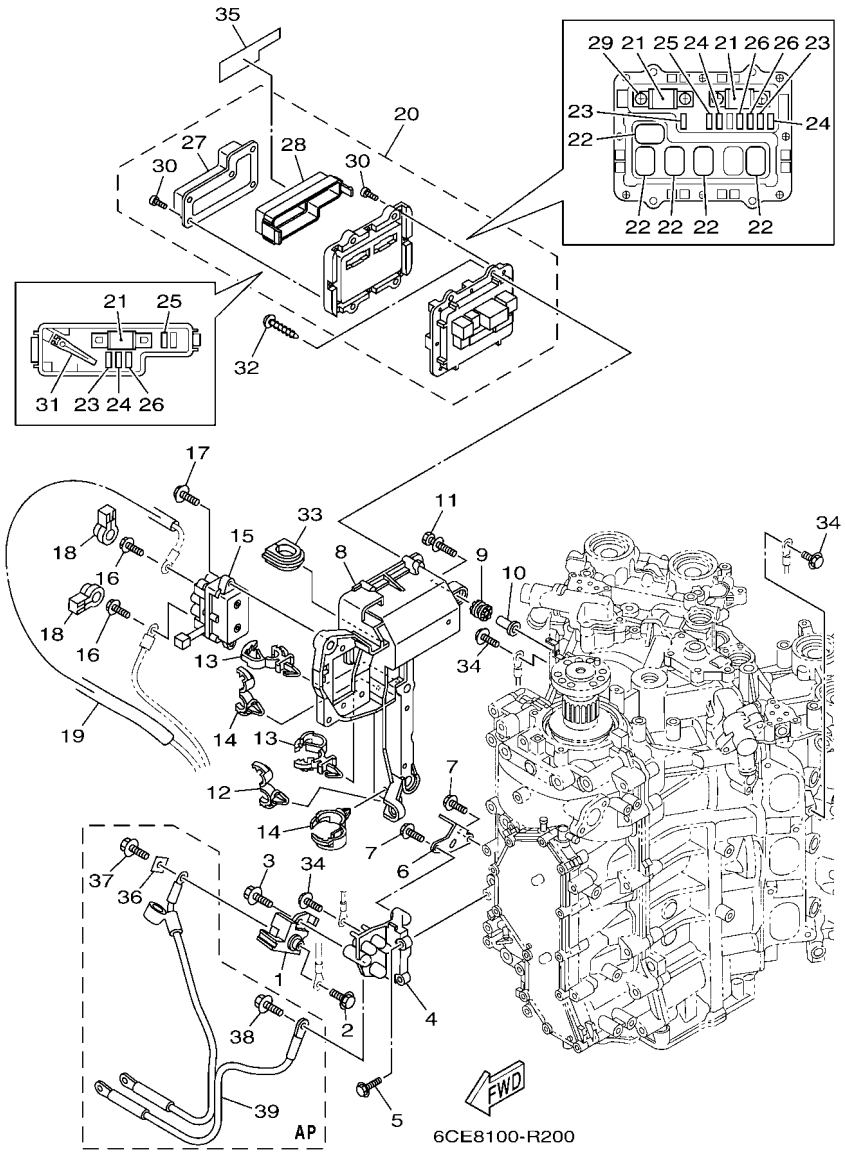

FIG. 20 ELECTRICAL 3

REF. NO.	PART NO.	DESCRIPTION	XCA	UCA	NCA	NCA2	NCA2	REMARKS
28	6CB–85544–00	.CASE	1	1	1	1	1	
29	68F–82846–00	.SCREW, PAN HEAD (M5)	4	4	4	4	4	
30	6P2–82113–00	.SCREW (M3)	13	13	13	13	13	
31	67F–2812A–00	.PULLER, FUSE	1	1	1	1	1	
32	97780–50620	SCREW, TAPPING	4	4	4	4	4	
33	6P2–81336–00	GROMMET	1	1	1	1	1	
34	97E95–06516	BOLT, HEXAGON W/W DEEP RECESS	5	5	5	5	5	
35	6CE–81919–20	GRAPHIC, REGULATOR	1	1	1	1	1	
36	6CB–81923–00	WASHER	1	1	1	1	1	AP
37	95D95–08016	BOLT, FLANGE DEEP RECESS	1	1	1	1	1	AP
38	95D95–08016	BOLT, FLANGE DEEP RECESS	1	1	1	1	1	AP
39	6CB–82105–01	BATTERY CABLE	1	1	1	1	1	AP

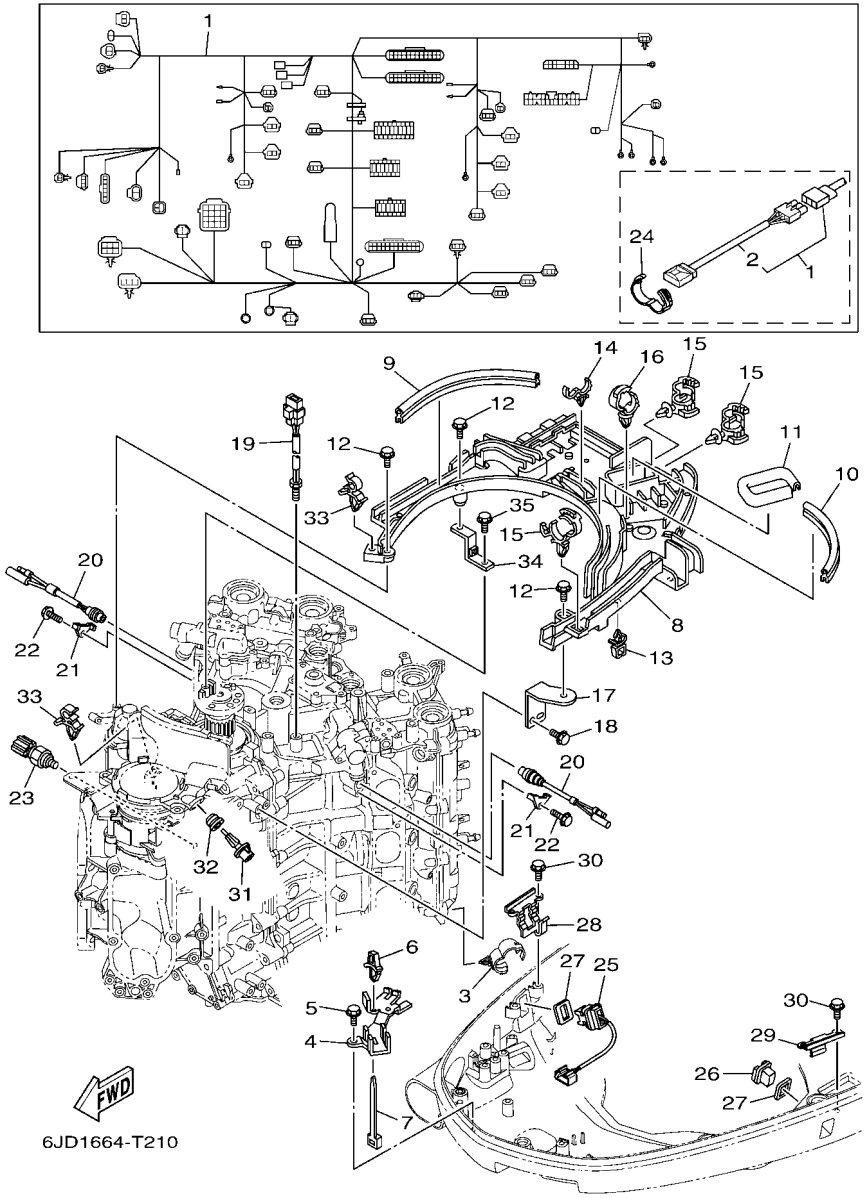

FIG. 21 ELECTRICAL 4

REF. NO.	PART NO.	DESCRIPTION	XCA	UCA	NCA	NCA2	NCA2	REMARKS
1	6CE–82590–15	WIRE HARNESS ASSY	1	1	1	1	1	FOR TILT LIMIT
2	6CE–81980–00	.DIODE ASSY	1	1	1	1	1	
3	90464–20181	CLAMP	4	4	4	4	4	
4	6CB–82594–00	CLAMP	1	1	1	1	1	
5	95D95–06012	BOLT, FLANGE DEEP RECESS	2	2	2	2	2	
6	90464–06001	CLAMP	1	1	1	1	1	
7	90465–13M24	CLAMP	1	1	1	1	1	
8	6CB–82589–01	PROTECTER, WIRE HARNESS	1	1	1	1	1	
9	6BG–42617–00	DAMPER, FORM	1	1	1	1	1	
10	6CB–42617–00	DAMPER, FORM	1	1	1	1	1	
11	6CB–42629–00	SEAL	1	1	1	1	1	
12	95D95–06020	BOLT, FLANGE DEEP RECESS	5	5	5	5	5	
13	90464–11121	CLAMP	1	1	1	1	1	
14	90464–18246	CLAMP	1	1	1	1	1	
15	90464–12183	CLAMP	4	4	4	4	4	
16	90464–20181	CLAMP	2	2	2	2	2	
17	6CB–82388–00	PLATE	1	1	1	1	1	
18	95D95–06016	BOLT, FLANGE DEEP RECESS	2	2	2	2	2	
19	6CB–85790–00	THERMOSENSOR ASSY	1	1	1	1	1	
20	6P2–82560–01	THERMO SWITCH ASSY	2	2	2	2	2	
21	6E9–82588–00	PLATE	2	2	2	2	2	
22	95D95–06012	BOLT, FLANGE DEEP RECESS	2	2	2	2	2	
23	6AW–83651–00	SENDER, OIL PRESSURE	1	1	1	1	1	
24	90464–16001	CLAMP	1	1	1	1	1	
25	6BR–82563–01	TRIM & TILT SWITCH ASSY	1	1	1	1	1	
26	69J–42723–01	COVER, BOTTOM	1	1	1	1	1	
27	69J–82587–00	GASKET	2	2	2	2	2	

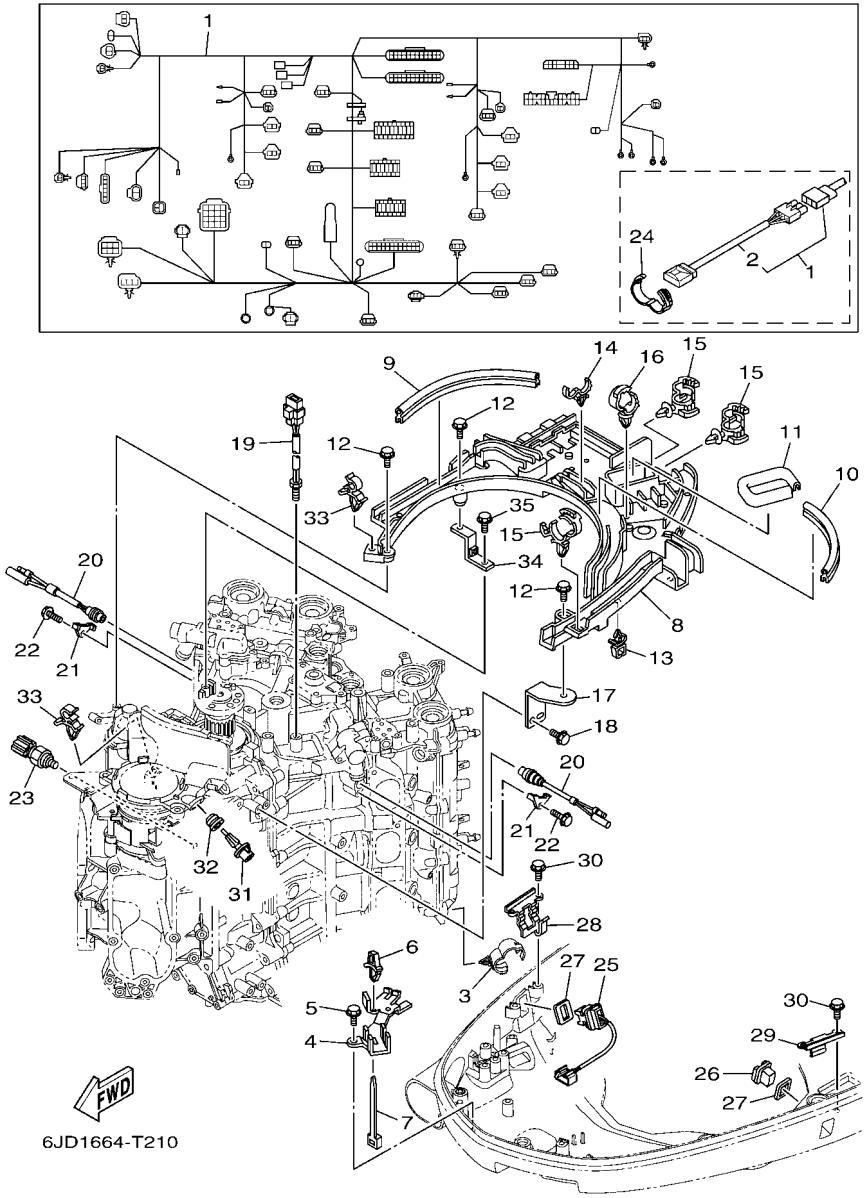

FIG. 21 ELECTRICAL 4

REF. NO.	PART NO.	DESCRIPTION	XCA	UCA	NCA	NCA2	NCA2	REMARKS
28	63P–83614–01	BRACKET	1	1	1	1	1	
29	6DA–83614–00	BRACKET	1	1	1	1	1	
30	95D95–06012	BOLT, FLANGE DEEP RECESS	4	4	4	4	4	
31	63P–85886–00	SENSOR, AIR TEMPERATURE	1	1	1	1	1	
32	6CE–14435–00	GROMMET	1	1	1	1	1	
33	90464–09129	CLAMP	2	2	2	2	2	
34	6CB–81952–00	HOLDER, RELAY	1	1	1	1	1	
35	95D95–06016	BOLT, FLANGE DEEP RECESS	1	1	1	1	1	

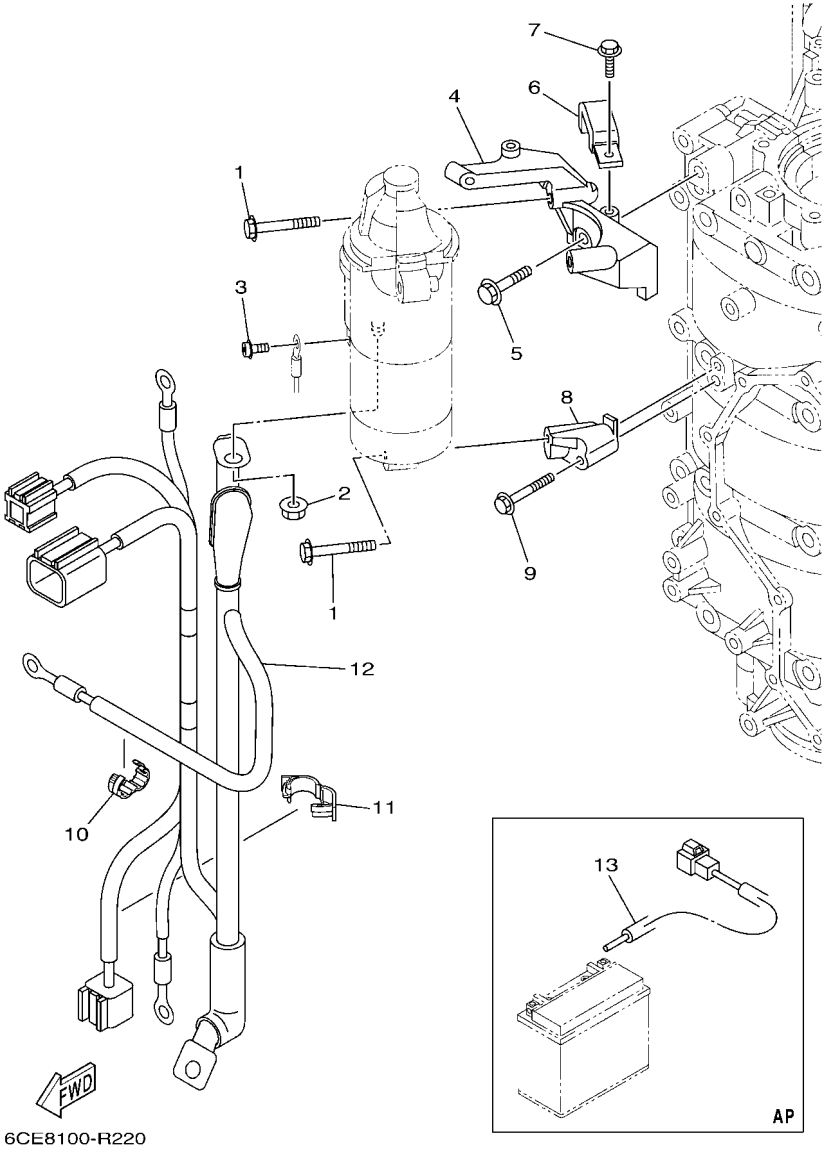

FIG. 22 ELECTRICAL 5

REF. NO.	PART NO.	DESCRIPTION	XCA	UCA	NCA	NCA2	NCA2	REMARKS
1	97513–08545	BOLT, WITH WASHER	3	3	3	3	3	
2	90179–08003	NUT	1	1	1	1	1	
3	97985–04308	SCREW, WITH WASHER	1	1	1	1	1	
4	6CB–81822–02	BRACKET, STARTING MOTOR	1	1	1	1	1	
5	90105–08M87	BOLT, FLANGE	2	2	2	2	2	
6	6CB–81443–00	CLAMP, LEAD 1	1	1	1	1	1	
7	95D95–06016	BOLT, FLANGE DEEP RECESS	1	1	1	1	1	
8	6CB–81823–A0	STAY, STARTING MOTOR	1	1	1	1	1	
9	90105–06151	BOLT, FLANGE	1	1	1	1	1	
10	90464–13227	CLAMP	1	1	1	1	1	
11	90464–18004	CLAMP	1	1	1	1	1	
12	6CE–8259M–00	WIRE HARNESS ASSY 2	1	1	1	1	1	
13	6CE–81949–01	WIRE, LEAD (ISOLATOR CABLE)	1	1	1	1	1	AP

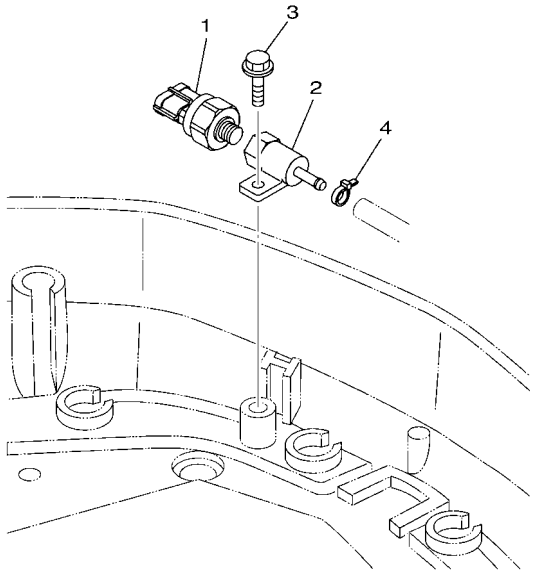

6CE1100-K390

FIG. 23 ELECTRICAL 6

REF. NO.	PART NO.	DESCRIPTION	XCA	UCA	NCA	NCA2	NCA2	REMARKS
1	6AW–8366B–01	SENSOR, WATER PRESSURE	1	1				FOR LAN SPEED
2	60V–8366D–00	ADAPTOR, INPUT	1	1				FOR LAN SPEED
3	95D95–06016	BOLT, FLANGE DEEP RECESS	1	1				FOR LAN SPEED
4	90465–11M10	CLAMP	1	1				FOR LAN SPEED

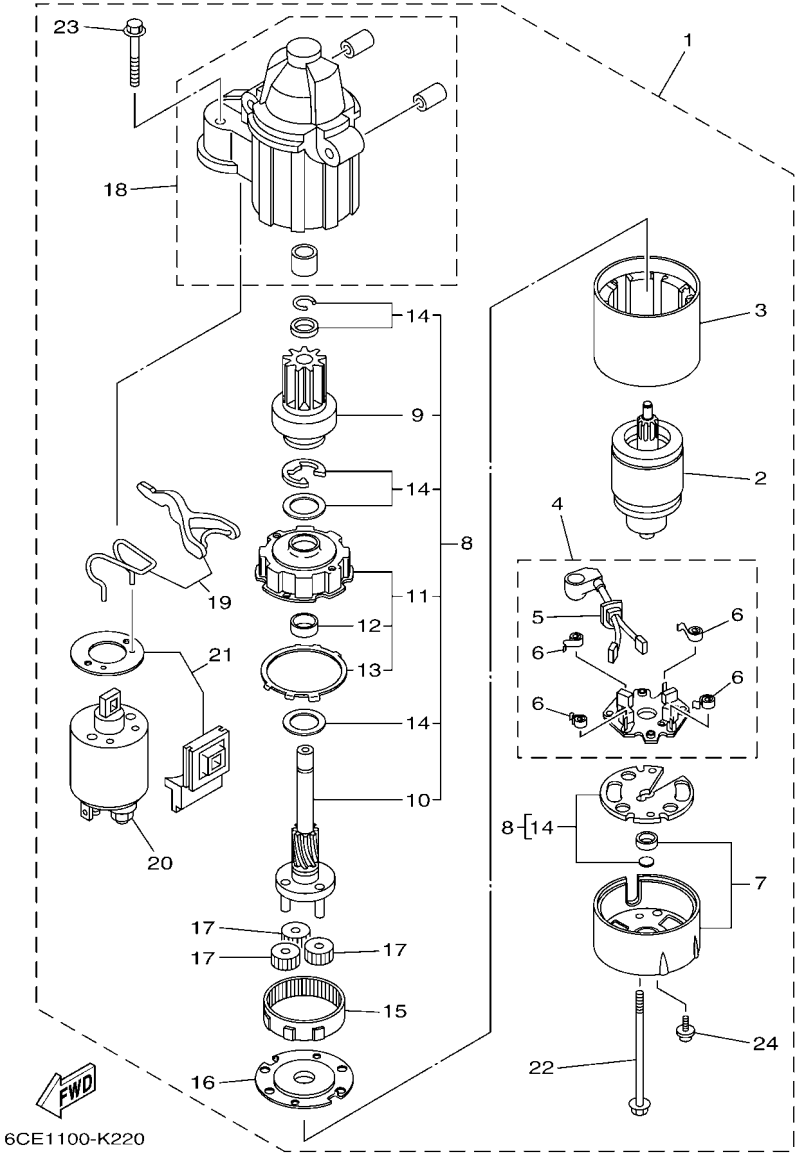

FIG. 24 STARTING MOTOR

REF. NO.	PART NO.	DESCRIPTION	XCA	UCA	NCA	NCA2	NCA2	REMARKS
1	6CE–81800–01	STARTING MOTOR ASSY	1	1	1	1	1	
2	6CE–81850–00	.ARMATURE ASSY	1	1	1	1	1	
3	6CE–81810–00	.STATOR ASSY	1	1	1	1	1	
4	6CE–81840–01	.BRUSH HOLDER ASSY	1	1	1	1	1	
5	6CE–81801–01	..BRUSH SET	1	1	1	1	1	
6	67F–81813–00	..SPRING, BRUSH	4	4	4	4	4	
7	6CE–81820–00	.REAR BRACKET ASSY	1	1	1	1	1	
8	6CE–81807–00	.GEAR ASSY, STARTING MOTOR	1	1	1	1	1	
9	6CB–81832–00	..CLUTCH, OVER RUN	1	1	1	1	1	
10	6CB–81836–00	..SHAFT, PINION	1	1	1	1	1	
11	6CE–81821–00	..BRACKET, CENTER 1	1	1	1	1	1	
12	67F–81841–00	...BEARING	1	1	1	1	1	
13	67F–8183R–00	...GASKET	1	1	1	1	1	
14	6CB–81809–00	..WASHER KIT	1	1	1	1	1	
15	67F–81891–00	.GEAR, RING	1	1	1	1	1	WITH 67F-8183R-00
16	6CE–81830–00	.BRACKET, CENTER 2	1	1	1	1	1	
17	60V–8183T–00	.GEAR, IDLER	3	3	3	3	3	
18	6CE–81842–00	.COVER	1	1	1	1	1	
19	6CE–81839–00	.LEVER ASSY	1	1	1	1	1	
20	6C5–81941–00	.STARTER RELAY ASSY	1	1	1	1	1	
21	6CE–81869–00	.COVER, DUST	1	1	1	1	1	
22	6CB–81826–00	.BOLT	2	2	2	2	2	
23	69J–81828–00	.BOLT 2	2	2	2	2	2	
24	67F–81846–00	.SCREW	2	2	2	2	2	

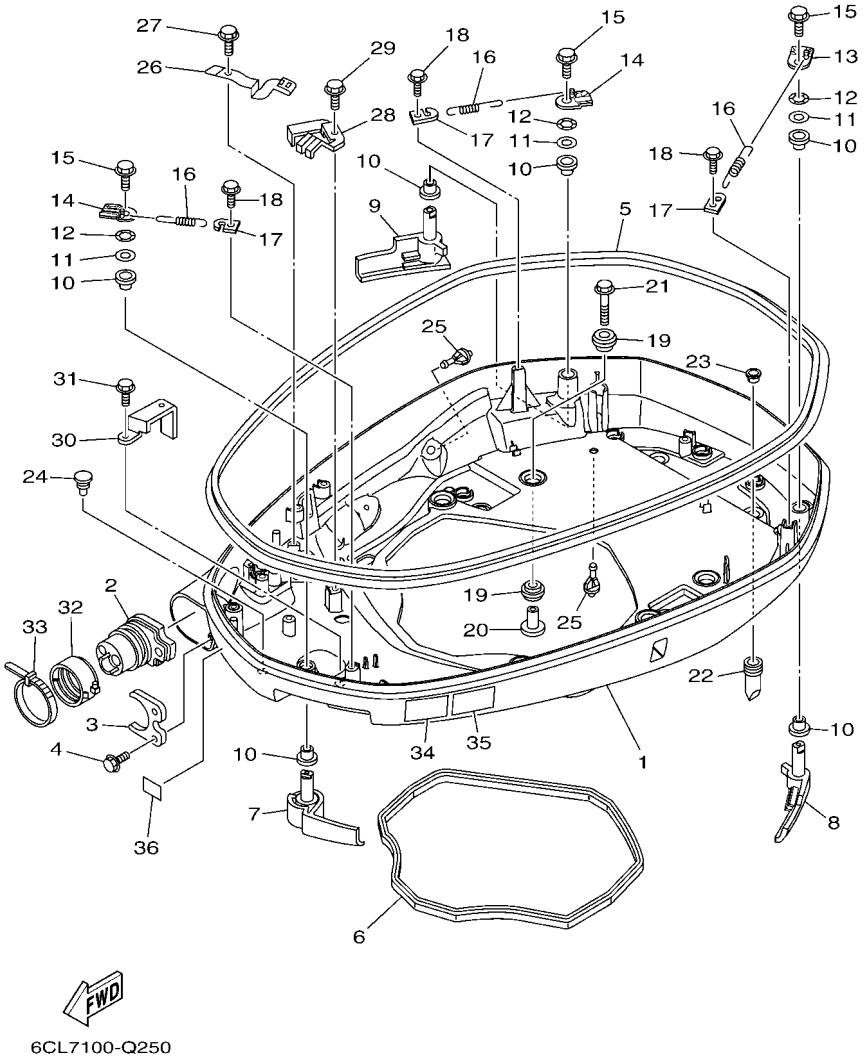

FIG. 25 BOTTOM COWLING 1

REF. NO.	PART NO.	DESCRIPTION	XCA	UCA	NCA	NCA2	NCA2	REMARKS
1	6CB–42710–00–8D	BOTTOM COWLING ASSY	1	1	1			GRAY
	6CB–42710–00–CE	BOTTOM COWLING ASSY				1	1	WHITE
2	6CE–42725–02	GROMMET	1	1	1	1	1	
3	6CB–42761–00	STOPPER	1	1	1	1	1	
4	95D95–06014	BOLT, FLANGE DEEP RECESS	2	2	2	2	2	
5	6CB–42615–01	SEAL	1	1	1	1	1	
6	6CB–42716–00	RUBBER SEAL 1	1	1	1	1	1	
7	6CB–42815–02–8D	LEVER, CLAMP 1	1	1	1			GRAY
	6CB–42815–02–CE	LEVER, CLAMP 1				1	1	WHITE
8	6CB–42816–02–8D	LEVER, CLAMP 2	1	1	1			GRAY
	6CB–42816–02–CE	LEVER, CLAMP 2				1	1	WHITE
9	6CB–42817–02–8D	LEVER, CLAMP 3	1	1	1			GRAY
	6CB–42817–02–CE	LEVER, CLAMP 3				1	1	WHITE
10	90386–15M73	BUSH	6	6	6	6	6	
11	90201–156J2	WASHER, PLATE	3	3	3	3	3	
12	90206–15M18	WASHER, WAVE	3	3	3	3	3	
13	6CB–42818–00	LEVER, CLAMP 4	1	1	1	1	1	
14	6CB–42819–00	LEVER, CLAMP 5	2	2	2	2	2	
15	95D95–08012	BOLT, FLANGE DEEP RECESS	3	3	3	3	3	
16	90506–22001	SPRING, TENSION	3	3	3	3	3	
17	66T–43144–00	HOOK, SPRING	3	3	3	3	3	
18	95D95–06012	BOLT, FLANGE DEEP RECESS	3	3	3	3	3	
19	90480–22M81	GROMMET	12	12	12	12	12	
20	90387–08M37	COLLAR	6	6	6	6	6	
21	90119–08187	BOLT, WITH WASHER	6	6	6	6	6	
22	6DA–42717–00	RUBBER, SEAL 2	2	2	2	2	2	
23	6DA–42384–00	SEAL, CAP	2	2	2	2	2	

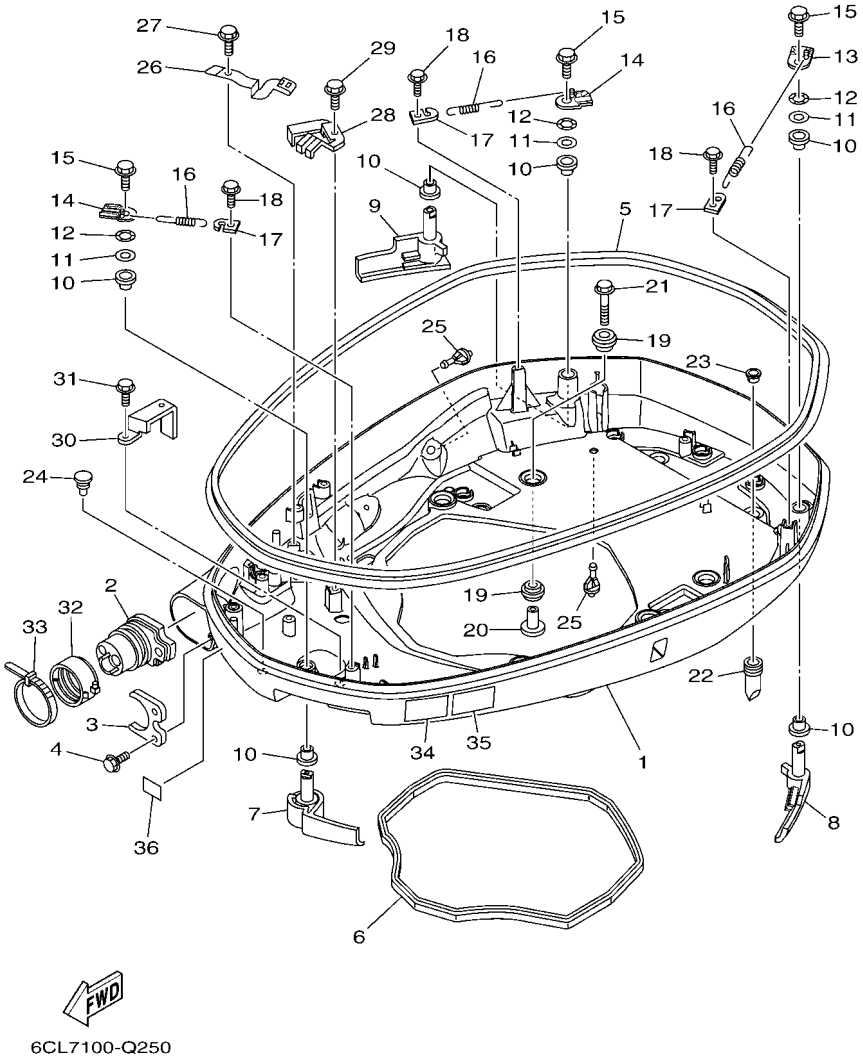

FIG. 25 BOTTOM COWLING 1

REF. NO.	PART NO.	DESCRIPTION	XCA	UCA	NCA	NCA2	NCA2	REMARKS
24	6H4–42748–00	GROMMET	1	1	1	1	1	
25	6P2–44391–00	NIPPLE, HOSE	2	2	2	2	2	
26	6CB–42743–00	BRACKET	1	1	1	1	1	
27	95D95–06012	BOLT, FLANGE DEEP RECESS	1	1	1	1	1	
28	6CB–42766–00	BRACKET 2	1	1	1	1	1	
29	95D95–06012	BOLT, FLANGE DEEP RECESS	1	1	1	1	1	
30	6CB–42756–00	STAY, CLAMP	1	1	1	1	1	
31	95D95–06012	BOLT, FLANGE DEEP RECESS	1	1	1	1	1	
32	68F–42753–00	FASTNER	1	1	1	1	1	AP
33	90464–20258	CLAMP	1	1	1	1	1	AP
34	6EE–42794–40	LABEL, WARNING (GENERAL)	1	1	1	1	1	
35	6EE–42794–50	LABEL, WARNING (GENERAL)	1	1	1	1	1	
36	6AH–81996–00	MARK	1	1	1	1	1	

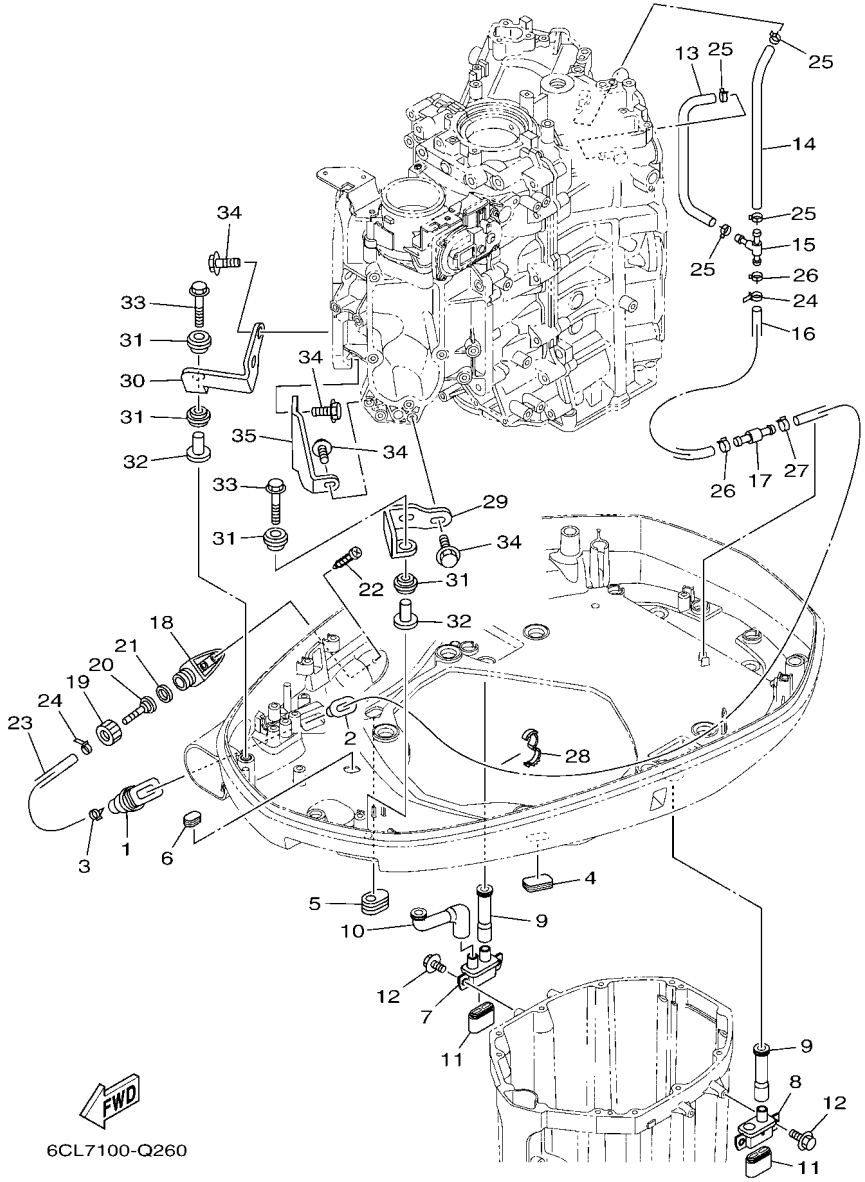

FIG. 26 BOTTOM COWLING 2

REF. NO.	PART NO.	DESCRIPTION	XCA	UCA	NCA	NCA2	NCA2	REMARKS
1	6H1–42726–21	GROMMET	1	1	1	1	1	
2	6BG–42384–00	SEAL, CAP	1	1	1	1	1	
3	90465–11M10	CLAMP	2	2	2	2	2	
4	6H4–42726–00	GROMMET	1	1	1	1	1	
5	61A–42727–00	GROMMET	1	1	1	1	1	
6	64G–42727–00	GROMMET	1	1	1	1	1	
7	6CE–42733–00	BOX, DRAIN	1	1	1	1	1	
8	6CE–42734–00	BOX, DRAIN 2	1	1	1	1	1	
9	6CE–42786–01	HOSE, DRAIN 1	2	2	2	2	2	
10	6CE–42787–01	HOSE, DRAIN 2	1	1	1	1	1	
11	69J–42717–00	RUBBER, SEAL 2	2	2	2	2	2	
12	95D95–06016	BOLT, FLANGE DEEP RECESS	4	4	4	4	4	
13	6CB–24315–00	PIPE 5	1	1	1	1	1	
14	90445–14021	HOSE (L185)	1	1	1	1	1	
15	6AW–42169–00	JOINT	1	1	1	1	1	
16	90445–16015	HOSE (L300)	1	1	1	1	1	
17	6AW–42785–00	PIPE	1	1	1	1	1	
18	6AW–12572–00	ADAPTER	1	1	1	1	1	
19	6R3–12581–00	JOINT, HOSE 1	1	1	1	1	1	
20	6AW–12582–00	JOINT, HOSE 2	1	1	1	1	1	
21	6R3–12583–00	GASKET, HOSE JOINT	1	1	1	1	1	
22	97780–60520	SCREW, TAPPING	2	2	2	2	2	
23	90445–14019	HOSE (L1460)	1	1	1	1	1	
24	90465–11M10	CLAMP	2	2	2	2	2	
25	90467–130A5	CLIP	4	4	4	4	4	
26	90467–140A8	CLIP	2	2	2	2	2	
27	90467–140A9	CLIP	1	1	1	1	1	

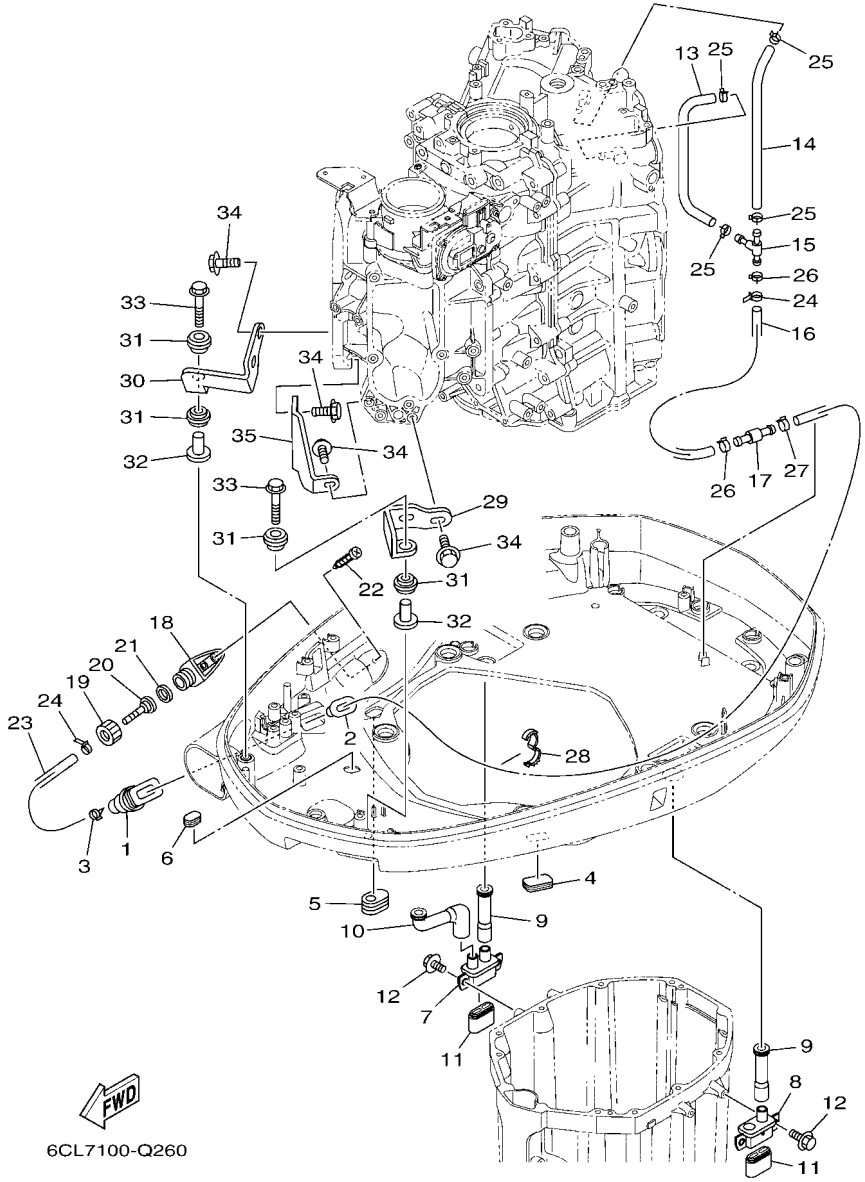

FIG. 26 BOTTOM COWLING 2

REF. NO.	PART NO.	DESCRIPTION	XCA	UCA	NCA	NCA2	NCA2	REMARKS
28	90464–16001	CLAMP	1	1	1	1	1	
29	6CB–42643–00	PLATE, CLAMP	1	1	1	1	1	
30	6CB–42644–00	PLATE, CLAMP 2	1	1	1	1	1	
31	90480–14029	GROMMET	4	4	4	4	4	
32	90387–06M03	COLLAR	2	2	2	2	2	
33	90119–06291	BOLT, WITH WASHER	2	2	2	2	2	
34	90105–06039	BOLT, FLANGE	6	6	6	6	6	
35	6CB–42744–00	STAY	1	1	1	1	1	

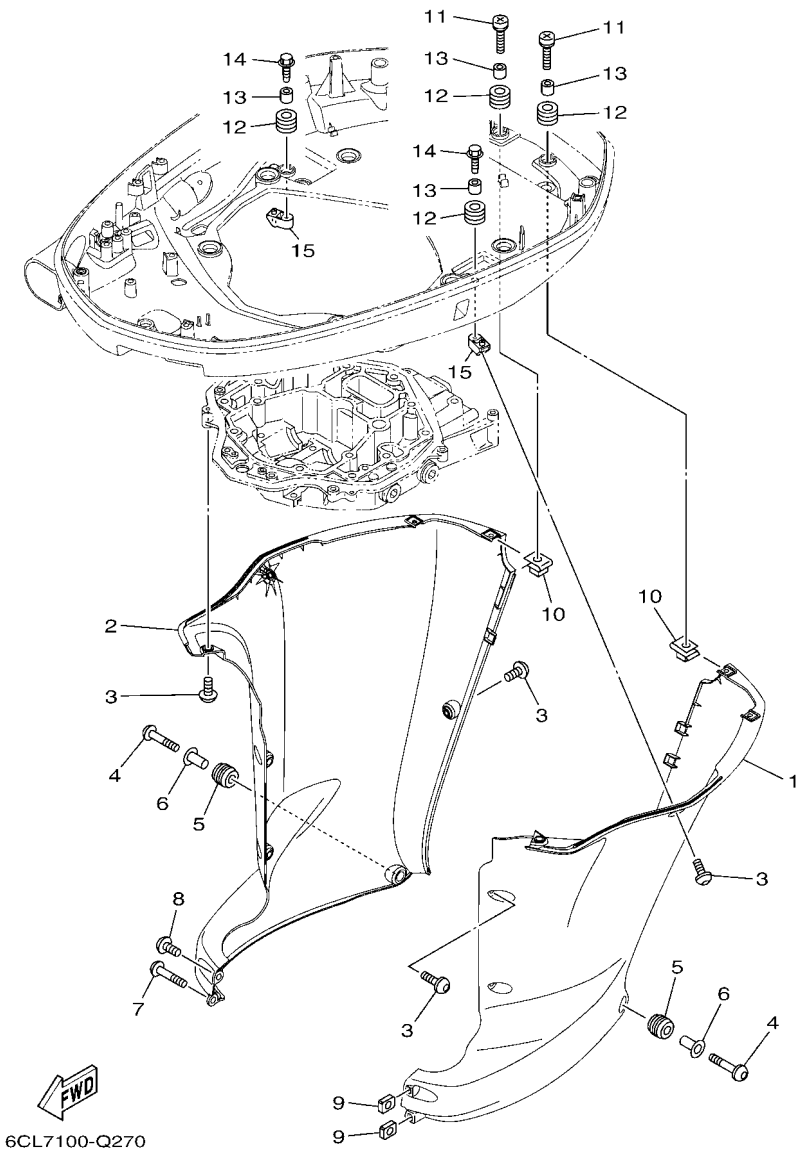

FIG. 27 BOTTOM COWLING 3

REF. NO.	PART NO.	DESCRIPTION	XCA	UCA	NCA	NCA2	NCA2	REMARKS
1	6CE–42741–01–8D	APRON	1	1	1			GRAY
	6CE–42741–01–CE	APRON				1	1	WHITE
2	6CE–42771–01–8D	APRON	1	1	1			GRAY
	6CE–42771–01–CE	APRON				1	1	WHITE
3	90111–06144	BOLT,HEX. SOCKET BUTTON	10	10	10	10	10	
4	90111–06142	BOLT,HEX. SOCKET BUTTON	2	2	2	2	2	
5	90480–16009	GROMMET	2	2	2	2	2	
6	90387–07028	COLLAR	2	2	2	2	2	
7	90111–06142	BOLT,HEX. SOCKET BUTTON	1	1	1	1	1	
8	90111–06144	BOLT,HEX. SOCKET BUTTON	1	1	1	1	1	
9	90173–06001	NUT, SQUARE	2	2	2	2	2	
10	90183–061A6	NUT, SPRING	4	4	4	4	4	
11	90159–06053	SCREW, WITH WASHER	4	4	4	4	4	
12	90480–13M24	GROMMET	6	6	6	6	6	
13	90387–06M43	COLLAR	6	6	6	6	6	
14	90109–06M80	BOLT	2	2	2	2	2	
15	6CE–42774–A0	STAY, APRON 1	2	2	2	2	2	

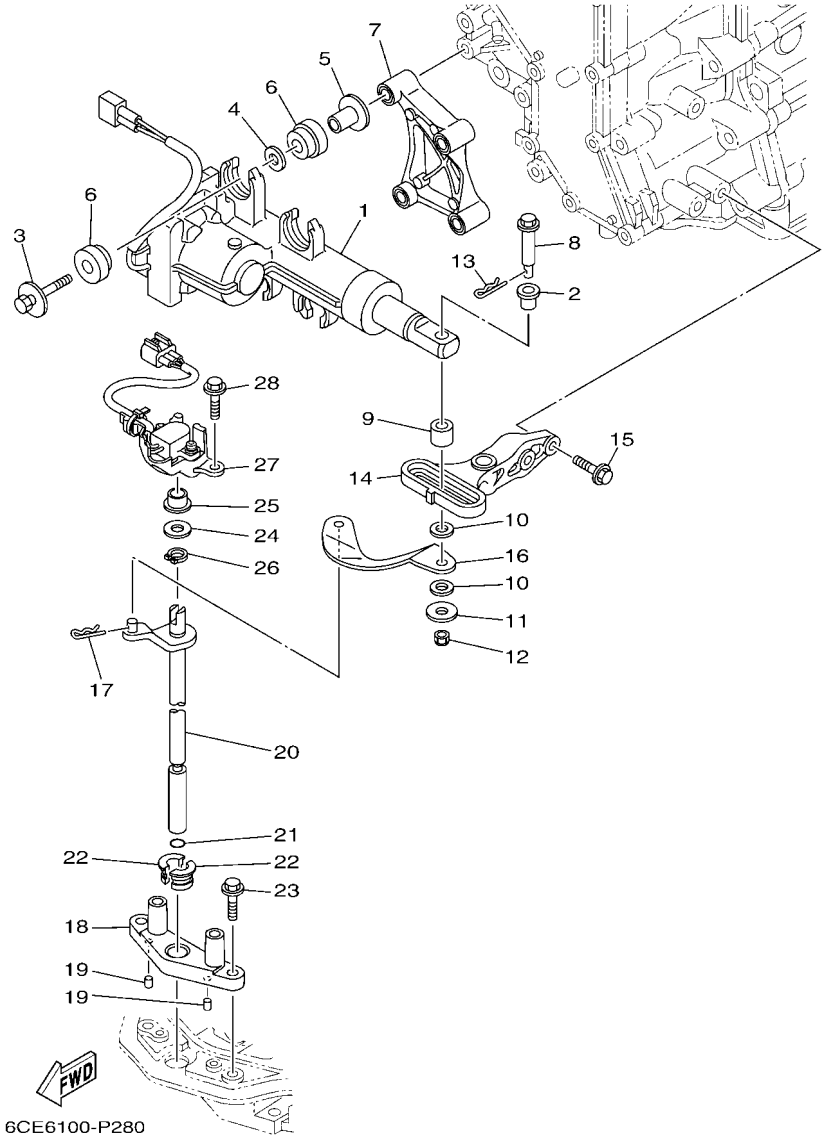

FIG. 28 CONTROL

REF. NO.	PART NO.	DESCRIPTION	XCA	UCA	NCA	NCA2	NCA2	REMARKS
1	6ML–4820A–00	ACTUATOR UNIT	1	1	1	1	1	
2	90386–08008	BUSH	1	1	1	1	1	
3	90119–08168	BOLT, WITH WASHER	4	4	4	4	4	
4	90201–12064	WASHER, PLATE	4	4	4	4	4	
5	90387–08104	COLLAR	4	4	4	4	4	
6	6CE–85564–00	GROMMET	8	8	8	8	8	
7	6CE–44142–20	JOINT	1	1	1	1	1	
8	6CE–42195–10	PIN, JOINT 1	1	1	1	1	1	
9	6CE–44122–20	BUSHING, SHIFT ROD LEVER	1	1	1	1	1	
10	90202–08M41	WASHER, PLATE	2	2	2	2	2	
11	90201–06068	WASHER, PLATE	1	1	1	1	1	
12	90185–06M07	NUT, SELF-LOCKING	1	1	1	1	1	
13	90468–18008	CLIP	1	1	1	1	1	
14	6CE–44117–10	BRACKET	1	1	1	1	1	
15	97E75–06525	BOLT, HEXAGON W/W DEEP RECESS	2	2	2	2	2	
16	6CE–44121–10	LEVER, SHIFT ROD	1	1	1	1	1	
17	90468–18008	CLIP	1	1	1	1	1	
18	6CE–44118–A0	BRACKET	1	1	1	1	1	
19	93604–07M13	PIN, DOWEL	2	2	2	2	2	
20	6CE–44120–21	HANDLE GEAR SHIFT ASSY	1	1	1	1	1	
21	93210–09165	O-RING	1	1	1	1	1	
22	90386–11001	BUSH	2	2	2	2	2	
23	95D75–06025	BOLT, FLANGE DEEP RECESS	2	2	2	2	2	
24	90201–11008	WASHER, PLATE	1	1	1	1	1	
25	90386–10001	BUSH	1	1	1	1	1	
26	93410–10082	CIRCLIP	1	1	1	1	1	
27	6CE–68303–00	SENSOR ASSY	1	1	1	1	1	

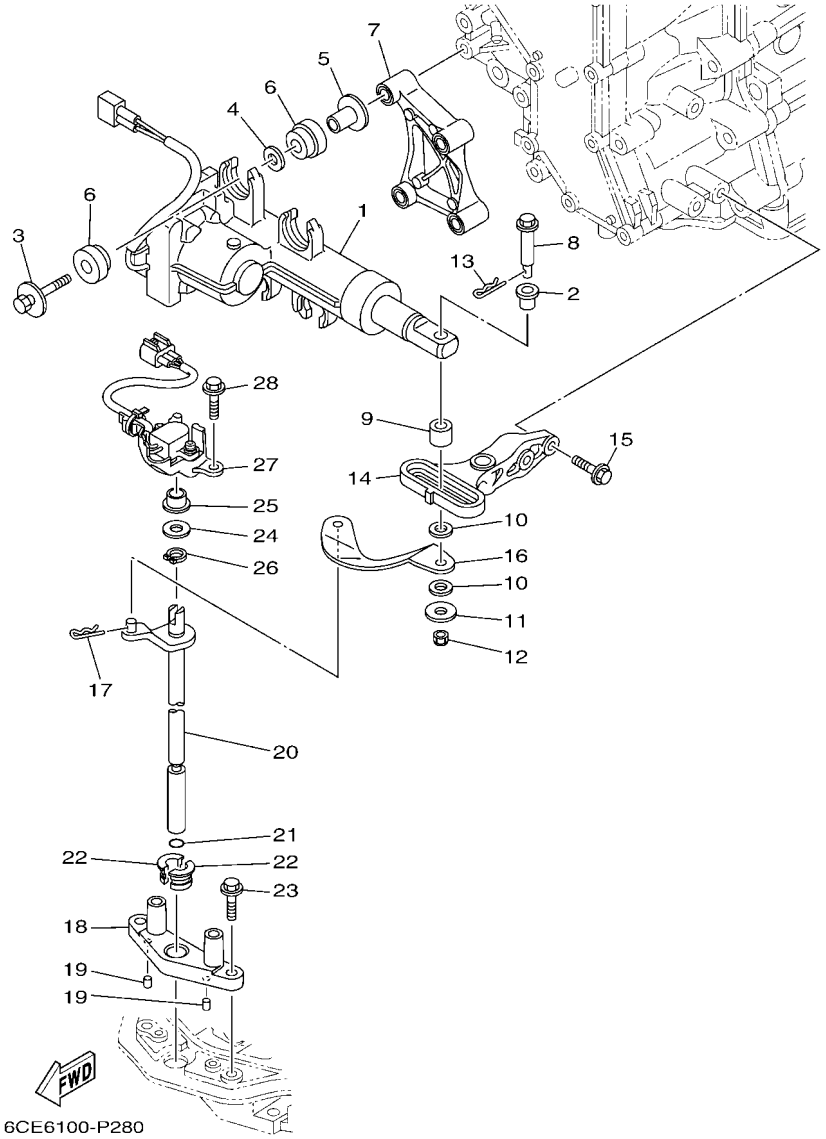

FIG. 28 CONTROL

REF. NO.	PART NO.	DESCRIPTION	XCA	UCA	NCA	NCA2	NCA2	REMARKS
28	95D75–06025	BOLT, FLANGE DEEP RECESS	2	2	2	2	2	

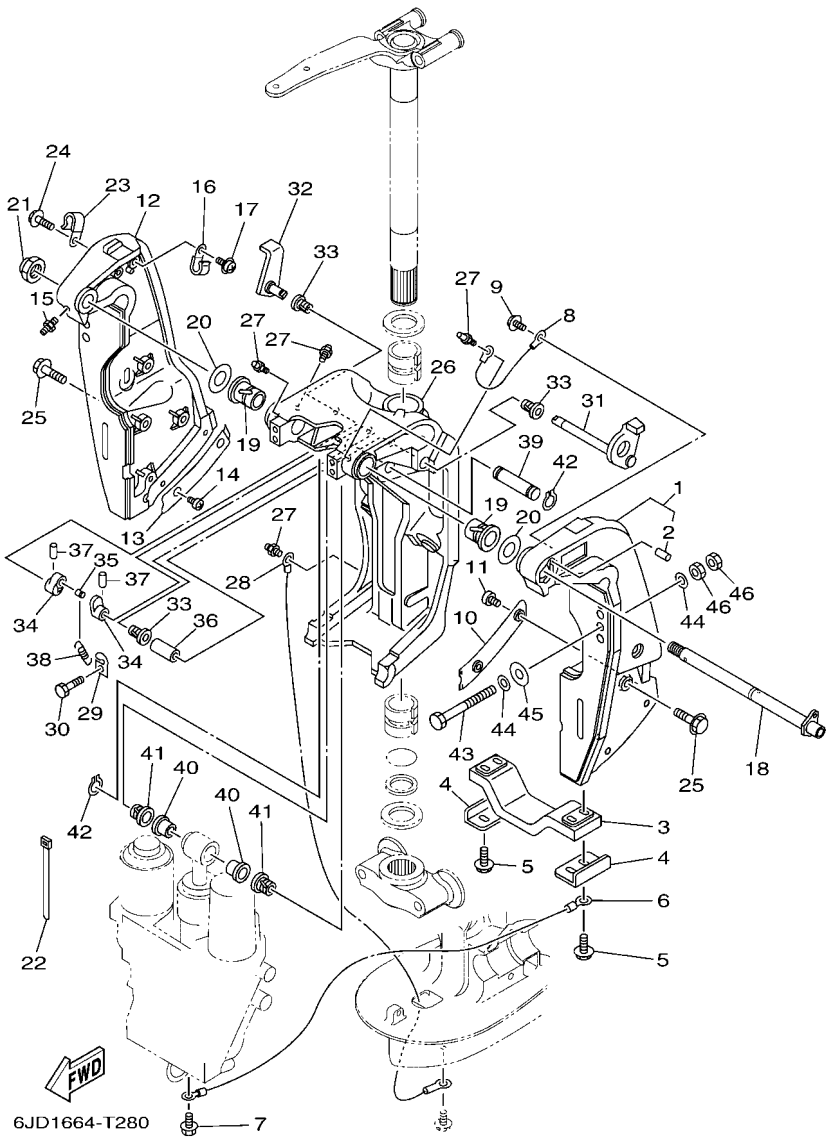

FIG. 29 BRACKET 1

REF. NO.	PART NO.	DESCRIPTION	XCA	UCA	NCA	NCA2	NCA2	REMARKS
1	69J–43111–11–8D	BRACKET, CLAMP 1	1	1	1			TILT LIMIT(GRAY)
	69J–43111–11–CE	BRACKET, CLAMP 1				1	1	TILT LIMIT(WHITE)
2	93606–19002	.PIN, DOWEL	1	1	1	1	1	
3	6G5–45251–02	ANODE	1	1	1	1	1	
4	6G5–44526–00	PLATE	2	2	2	2	2	
5	97E95–06525	BOLT, HEXAGON W/W DEEP RECESS	4	4	4	4	4	
6	6H1–82148–00	WIRE, LEAD 4	1	1	1	1	1	
7	97E95–06510	BOLT, HEXAGON W/W DEEP RECESS	1	1	1	1	1	
8	6E5–82148–00	WIRE, LEAD 4	1	1	1	1	1	
9	97985–06212	SCREW, WITH WASHER	1	1	1	1	1	
10	61A–43132–00	WASHER, FRICTION	1	1	1	1	1	
11	97885–06010	SCREW, PAN HEAD	2	2	2	2	2	
12	69J–43112–02–8D	BRACKET, CLAMP 2	1	1	1			GRAY
	69J–43112–02–CE	BRACKET, CLAMP 2				1	1	WHITE
13	61A–43133–00	WASHER,FRICTION	1	1	1	1	1	
14	97885–06010	SCREW, PAN HEAD	2	2	2	2	2	
15	93700–06002	NIPPLE, GREASE	1	1	1	1	1	
16	90465–08M83	CLAMP	1	1	1	1	1	
17	97985–06212	SCREW, WITH WASHER	1	1	1	1	1	
18	6R3–43131–30	BOLT, CLAMP BRACKET	1	1	1	1	1	FOR TILT LIMIT
19	90386–25M31	BUSH	2	2	2	2	2	
20	90201–26M59	WASHER, PLATE	2	2	2	2	2	
21	90185–22M11	NUT, SELF-LOCKING	1	1	1	1	1	
22	90465–11M10	CLAMP	4	4	4	4	4	
23	90465–08M83	CLAMP	1	1	1	1	1	
24	97E95–06514	BOLT, HEXAGON W/W DEEP RECESS	1	1	1	1	1	
25	90119–10024	BOLT, WITH WASHER	8	8	8	8	8	

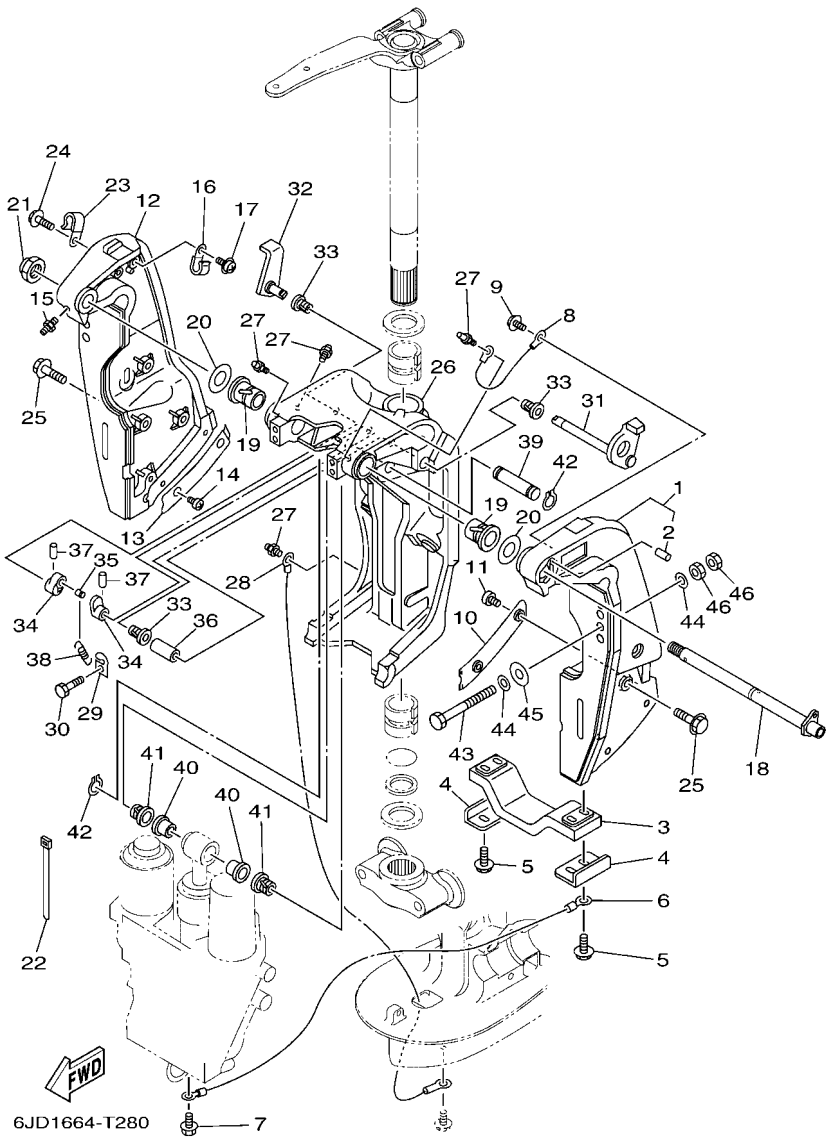

FIG. 29 BRACKET 1

REF. NO.	PART NO.	DESCRIPTION	XCA	UCA	NCA	NCA2	NCA2	REMARKS
26	61A–43311–22–8D	BRACKET, SWIVEL 1	1	1	1			GRAY
	61A–43311–22–CE	BRACKET, SWIVEL 1				1	1	WHITE
27	93700–06002	NIPPLE, GREASE	5	5	5	5	5	
28	69J–82147–00	WIRE, LEAD 5	1	1	1	1	1	
29	6G5–43144–00	HOOK, SPRING	1	1	1	1	1	
30	97D95–06010	BOLT, HEXAGON DEEP RECESS	1	1	1	1	1	
31	61A–43181–01	LEVER, TILT STOP 1	1	1	1	1	1	
32	6G5–43185–02	LEVER, TILT STOP 2	1	1	1	1	1	
33	90386–10M16	BUSH	3	3	3	3	3	
34	6G5–43148–00	COLLAR, DISTANCE	2	2	2	2	2	
35	90249–06M19	PIN	1	1	1	1	1	
36	90387–10M05	COLLAR	1	1	1	1	1	
37	91690–30020	PIN, SPRING	2	2	2	2	2	
38	90506–16003	SPRING, TENSION	1	1	1	1	1	
39	6E5–43126–10	PIN, UPPER SHOCK MOUNT	1	1	1	1	1	
40	90386–18M63	BUSH	2	2	2	2	2	
41	90386–18M14	BUSH	2	2	2	2	2	
42	93410–18M05	CIRCLIP	2	2	2	2	2	
43	90101–12065	BOLT (L:130MM)	2	2	2	2	2	UR
	90101–12066	BOLT (L:150MM)	2	2	2	2	2	UR
44	90201–13M01	WASHER, PLATE	8	8	8	8	8	
45	90201–12426	WASHER, PLATE	4	4	4	4	4	
46	95380–12600	NUT	8	8	8	8	8	

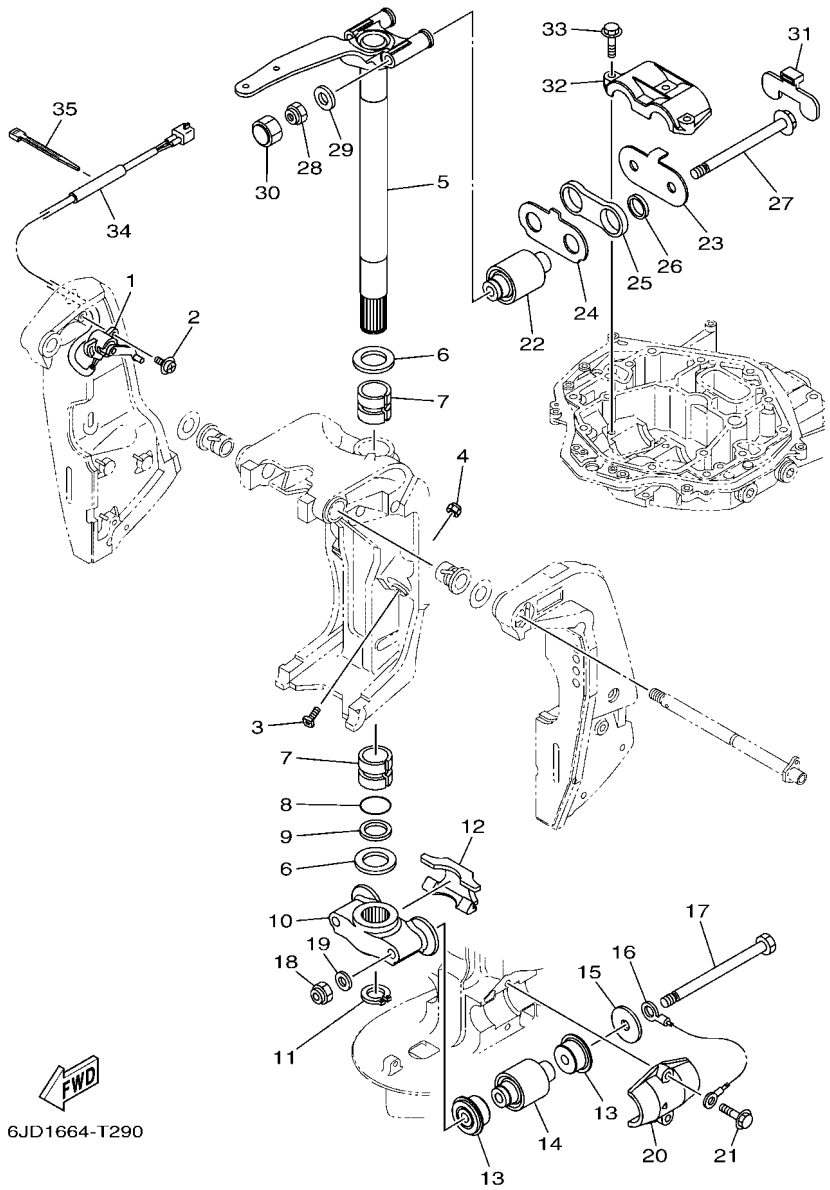

FIG. 30 BRACKET 2

REF. NO.	PART NO.	DESCRIPTION	XCA	UCA	NCA	NCA2	NCA2	REMARKS
1	69J–83672–11	TRIM SENDER	1	1	1	1	1	
2	97985–06216	SCREW, WITH WASHER	2	2	2	2	2	
3	6AW–43376–00	BOLT, THRUST RECEIVER	2	2	2	2	2	
4	95780–10300	NUT, FLANGE	2	2	2	2	2	
5	6CE–42510–00–8D	STEERING BRACKET ASSY	1	1	1			GRAY
	6CE–42510–00–CE	STEERING BRACKET ASSY				1	1	WHITE
6	90201–40M00	WASHER, PLATE	2	2	2	2	2	
7	90386–39M89	BUSH	2	2	2	2	2	
8	93210–35321	O-RING	1	1	1	1	1	
9	90202–40M47	WASHER, PLATE	1	1	1	1	1	
10	6CE–44551–00–CA	HOUSING, LOWER MOUNT RUBBER 1	1	1	1	1	1	
11	93410–37M04	CIRCLIP	1	1	1	1	1	
12	6CE–44574–00	STOPPER, LOWER MOUNT RUBBER	1	1	1	1	1	
13	6CE–44575–00	DAMPER, LOWER MOUNT RUBBER	4	4	4	4	4	
14	6CE–44555–00	MOUNT DAMPER, LOWER SIDE	2	2	2	2	2	
15	90201–16032	WASHER, PLATE	2	2	2	2	2	
16	6AW–82149–00	WIRE, LEAD 3	1	1	1	1	1	
17	90101–14004	BOLT	2	2	2	2	2	
18	90185–14M00	NUT, SELF-LOCKING	2	2	2	2	2	
19	92995–14600	WASHER	2	2	2	2	2	
20	6CE–44552–00–CA	HOUSING, LOWER MOUNT RUBBER 2	2	2	2	2	2	
21	90119–10024	BOLT, WITH WASHER	4	4	4	4	4	
22	6CE–44514–00	MOUNT DAMPER, UPPER SIDE	2	2	2	2	2	
23	6CE–44526–00	PLATE	1	1	1	1	1	
24	6CE–44536–00	PLATE 2	1	1	1	1	1	
25	6CE–44532–00	STOPPER, UPPER MOUNT	1	1	1	1	1	
26	90387–28013	COLLAR	2	2	2	2	2	

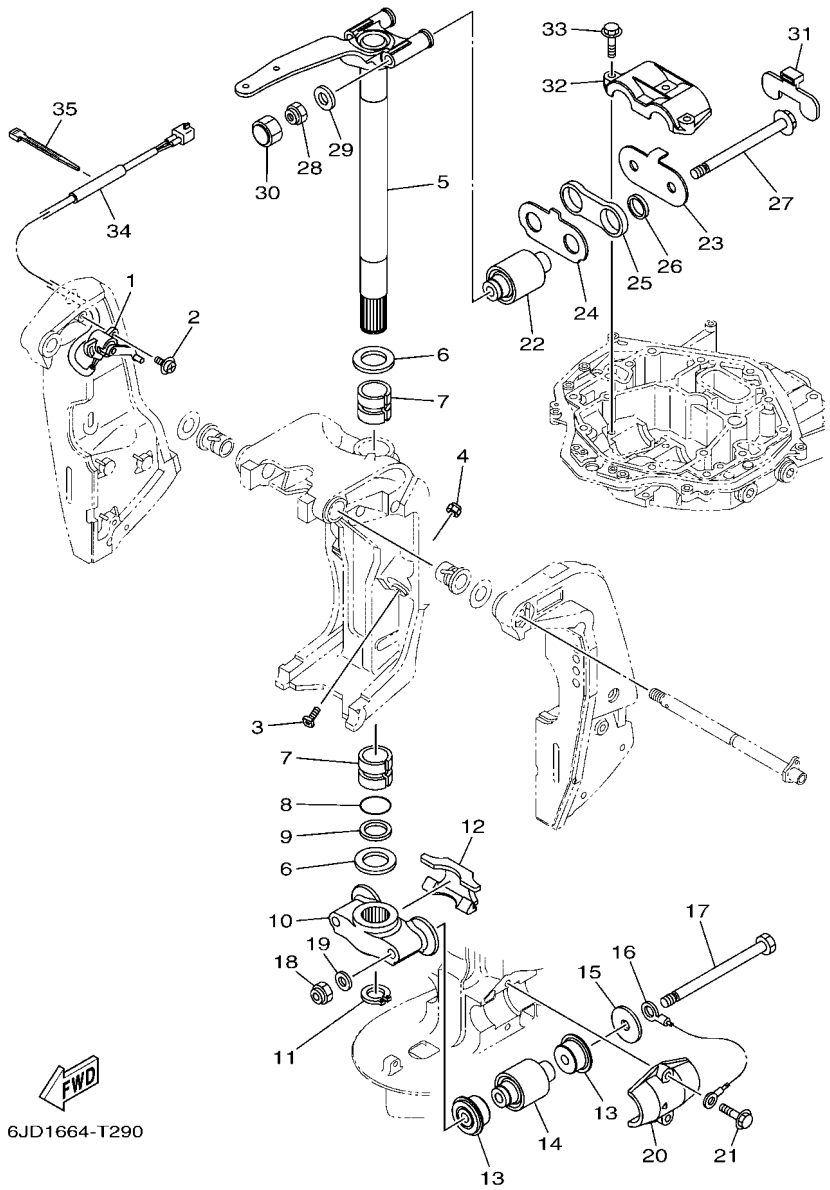

FIG. 30 BRACKET 2

REF. NO.	PART NO.	DESCRIPTION	XCA	UCA	NCA	NCA2	NCA2	REMARKS
27	90105–14005	BOLT, FLANGE	2	2	2	2	2	
28	90185–14M00	NUT, SELF-LOCKING	2	2	2	2	2	
29	92995–14600	WASHER	2	2	2	2	2	
30	6CE–44194–00	CAP	2	2	2	2	2	
31	6CE–44533–00	DAMPER, UPPER MOUNT RUBBER	1	1	1	1	1	
32	6CE–44511–00	COVER, UPPER MOUNT	1	1	1	1	1	
33	90119–10024	BOLT, WITH WASHER	3	3	3	3	3	
34	90446–15003	HOSE (L100)	1	1	1	1	1	
35	90465–11M10	CLAMP	1	1	1	1	1	

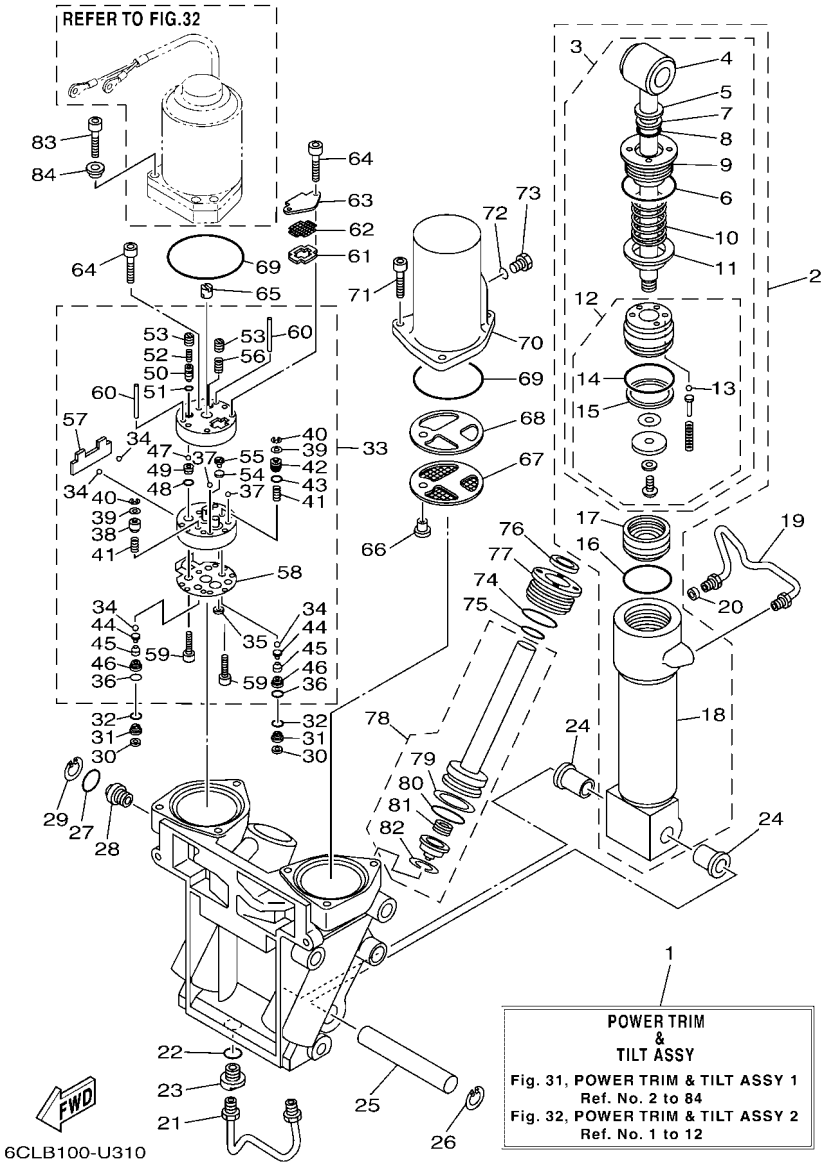

FIG. 31 POWER TRIM & TILT ASSY 1

REF. NO.	PART NO.	DESCRIPTION	XCA	UCA	NCA	NCA2	NCA2	REMARKS
1	69J–43800–11–8D	POWER TRIM & TILT ASSY	1	1	1			GRAY
	69J–43800–11–CE	POWER TRIM & TILT ASSY				1	1	WHITE
2	6CE–43840–01	POWER TILT ASSY	1	1	1	1	1	
3	6CE–43810–01	.TILT PISTON SUB ASSY	1	1	1	1	1	
4	69J–43801–01	..ROD	1	1	1	1	1	
5	93106–19001	..OIL SEAL	1	1	1	1	1	
6	63P–43861–20	..O-RING	1	1	1	1	1	
7	6H1–43872–00	..RING, BACK UP	1	1	1	1	1	
8	61A–4389H–01	..O-RING	1	1	1	1	1	
9	61A–43811–00	..SCREW, CYLINDER END	1	1	1	1	1	
10	69J–4384H–00	..SPRING	1	1	1	1	1	
11	69J–4382E–00	..ADAPTOR 2	1	1	1	1	1	
12	6CE–4380P–00	..PISTON SUB ASSY	1	1	1	1	1	
13	93505–32038	...BALL	5	5	5	5	5	
14	61A–43861–00	...O-RING	1	1	1	1	1	
15	61A–43871–00	...RING, BACK UP	1	1	1	1	1	
16	61A–43861–00	.O-RING	1	1	1	1	1	
17	6H1–43814–11	.PISTON, FREE	1	1	1	1	1	
18	61A–43813–02	.CYLINDER, TILT	1	1	1	1	1	
19	69J–43835–10	PIPE	1	1	1	1	1	
20	69J–4388J–00	PLUG 2	1	1	1	1	1	
21	69J–43833–02	PIPE	1	1	1	1	1	
22	93210–17239	O-RING	1	1	1	1	1	
23	69J–4388E–01	BOLT ,SCREW	1	1	1	1	1	
24	90386–18M14	BUSH	2	2	2	2	2	
25	61A–43818–00	PIN, LOWER SHOCK MOUNT	1	1	1	1	1	
26	61A–43876–01	RING, SNAP	1	1	1	1	1	

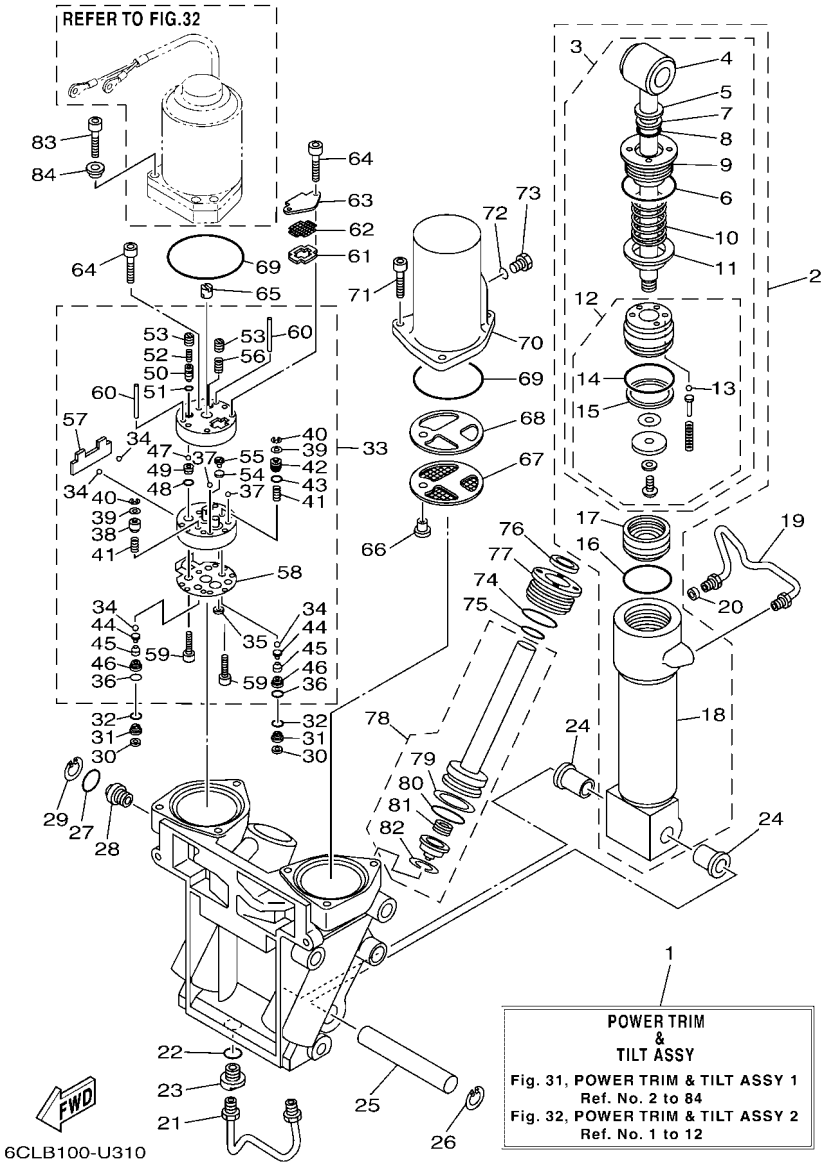

FIG. 31 POWER TRIM & TILT ASSY 1

REF. NO.	PART NO.	DESCRIPTION	XCA	UCA	NCA	NCA2	NCA2	REMARKS
27	6D8–43863–00	O-RING	1	1	1	1	1	
28	69J–43845–00	SCREW, MANUAL RELEASE	1	1	1	1	1	
29	6H1–43875–00	RING, SNAP	1	1	1	1	1	
30	69J–4381C–00	FILTER 3	2	2	2	2	2	
31	69J–43899–01	PLATE STOPPER	2	2	2	2	2	
32	69J–4389J–00	O-RING	2	2	2	2	2	
33	69J–43830–01	GEAR PUMP ASSY	1	1	1	1	1	
34	93505–32038	.BALL	4	4	4	4	4	
35	69J–4381C–00	.FILTER 3	1	1	1	1	1	
36	69J–4389J–00	.O-RING	2	2	2	2	2	
37	93503–16003	.BALL	2	2	2	2	2	
38	6CJ–4384M–00	.PISTON, SHUTTLE 2	1	1	1	1	1	
39	69A–4384F–00	.SEAL, MAIN VALVE	2	2	2	2	2	
40	99002–03600	.CIRCLIP	2	2	2	2	2	
41	69J–43894–00	.SPRING, SHUTTLE RETURN	2	2	2	2	2	
42	6CJ–43841–00	.PISTON, SHUTTLE	1	1	1	1	1	
43	6H1–43883–00	.O-RING	1	1	1	1	1	
44	60V–4386A–00	.PIN, ABSORBER VALVE	2	2	2	2	2	
45	69J–43853–00	.SPRING, MAIN VALVE	2	2	2	2	2	
46	6CJ–43893–00	.WASHER	2	2	2	2	2	
47	93501–08001	.BALL	2	2	2	2	2	
48	93210–08391	.O-RING	1	1	1	1	1	
49	69J–43851–00	.SEAT, RELIEF VALVE	1	1	1	1	1	
50	63P–43844–20	.PIN, VALVE SUPPORT	1	1	1	1	1	
51	93210–064A5	.O-RING	1	1	1	1	1	
52	69J–43855–00	.SPRING, UP RELIEF	1	1	1	1	1	
53	6CJ–43843–00	.SCREW, VALVE LOCK	2	2	2	2	2	

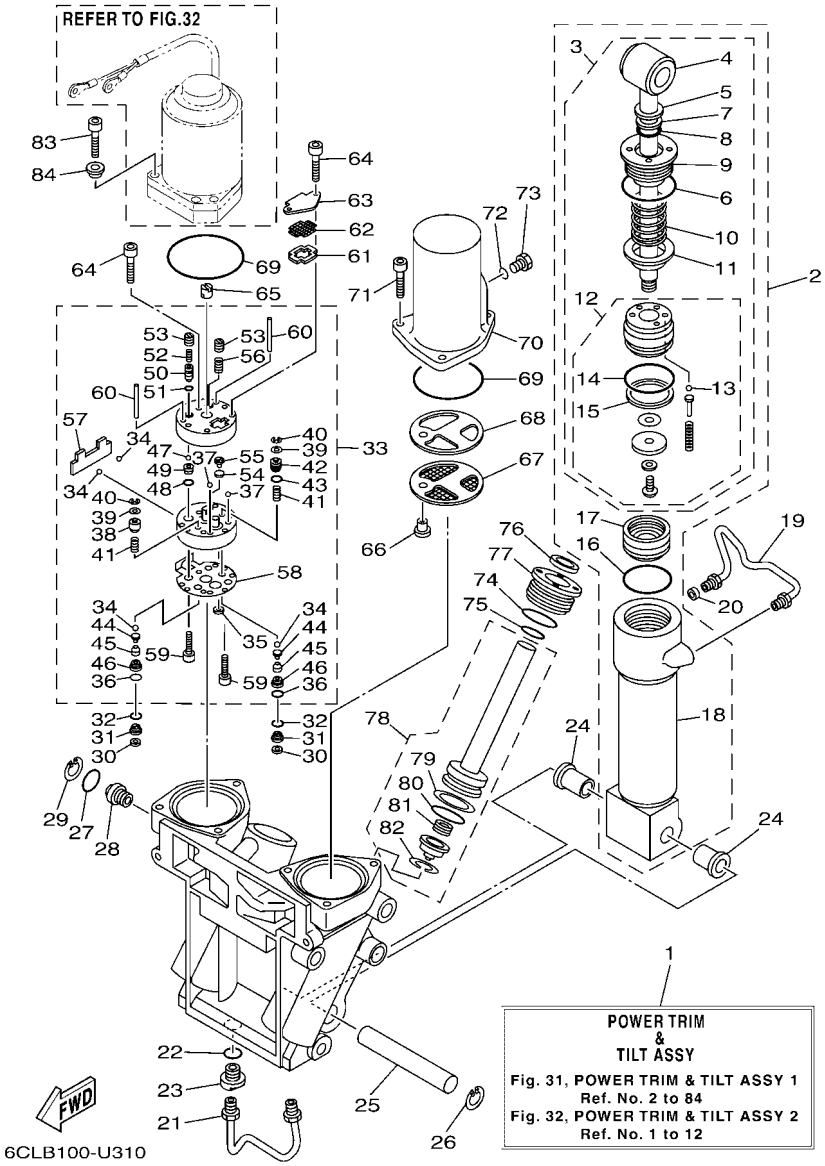

FIG. 31 POWER TRIM & TILT ASSY 1

REF. NO.	PART NO.	DESCRIPTION	XCA	UCA	NCA	NCA2	NCA2	REMARKS
54	6H1–4384G–11	.SEAL, RELIEF VALVE	1	1	1	1	1	
55	6H1–43844–10	.PIN, VALVE SUPPORT	1	1	1	1	1	
56	6H1–43856–10	.SPRING, DOWN RELIEF	1	1	1	1	1	
57	69J–43854–00	.SPRING, MANUAL RELEASE	1	1	1	1	1	
58	69J–4384G–00	.SEAL, RELIEF VALVE	1	1	1	1	1	
59	91318–05025	.BOLT	2	2	2	2	2	
60	93604–35236	.PIN, DOWEL	2	2	2	2	2	
61	69J–43871–00	RING, BACK UP	1	1	1	1	1	
62	69J–43816–00	FILTER 1	1	1	1	1	1	
63	69J–4381J–00	PLATE	1	1	1	1	1	
64	91318–05040	BOLT	3	3	3	3	3	
65	69J–43831–00	CONNECTOR, SHAFT	1	1	1	1	1	
66	69J–4388H–00	PLUG	1	1	1	1	1	
67	69J–43817–00	FILTER 2	1	1	1	1	1	
68	69J–4388F–00	SPACER	1	1	1	1	1	
69	93210–66001	O-RING	2	2	2	2	2	
70	69J–43828–00	BODY, RESERVOIR	1	1	1	1	1	
71	69J–43888–00	BOLT, SOCKET	3	3	3	3	3	
72	93210–09165	O-RING	1	1	1	1	1	
73	6H1–43829–00	PLUG, RESERVOIR	1	1	1	1	1	
74	61A–43861–00	O-RING	2	2	2	2	2	
75	6D8–43863–00	O-RING	2	2	2	2	2	
76	63P–43812–20	SEAL, DUST	2	2	2	2	2	
77	61A–43821–02	SCREW, TRIM CYLINDER END	2	2	2	2	2	
78	69J–43820–01	TRIM PISTON SUB ASSY	2	2	2	2	2	
79	61A–43874–00	.RING, BACK UP	1	1	1	1	1	
80	61A–43864–00	.O-RING	1	1	1	1	1	

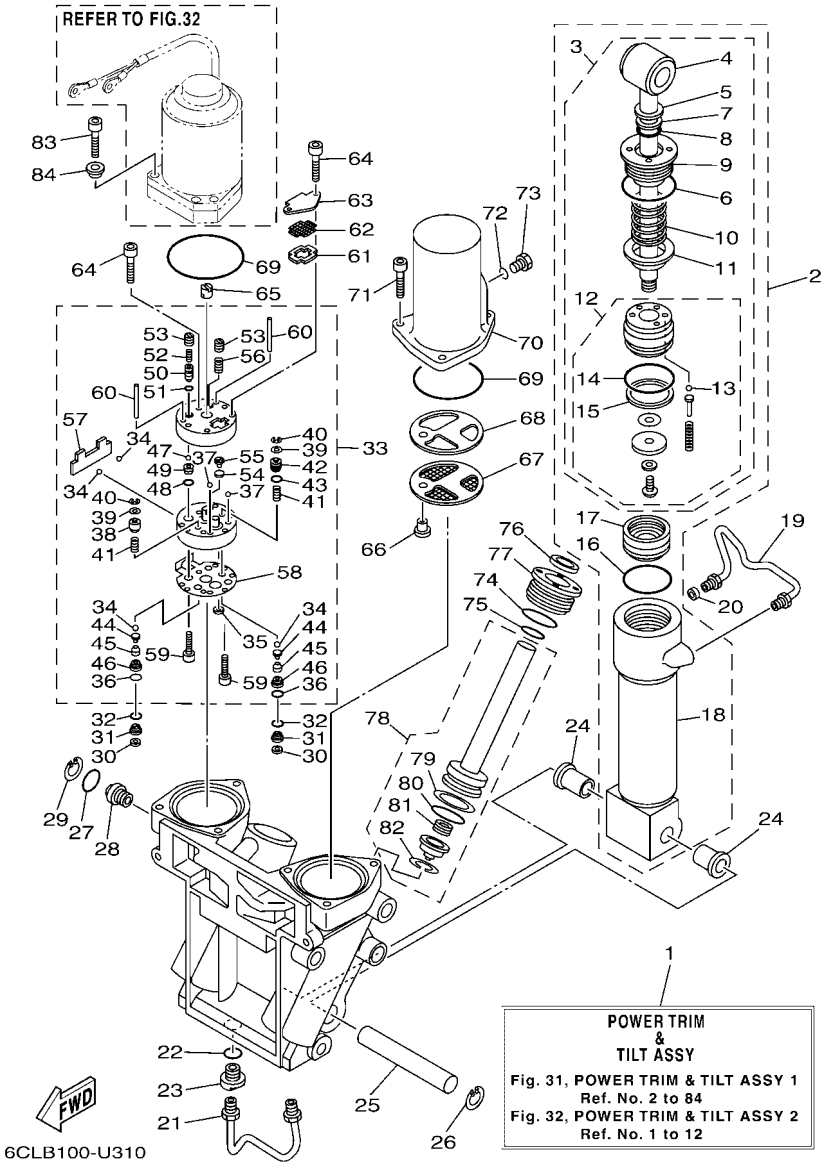

FIG. 31 POWER TRIM & TILT ASSY 1

REF. NO.	PART NO.	DESCRIPTION	XCA	UCA	NCA	NCA2	NCA2	REMARKS
81	61A–4384H–10	.SPRING	1	1	1	1	1	
82	61A–43875–10	.RING, SNAP	1	1	1	1	1	
83	90110–08M05	BOLT, HEXAGON SOCKET HEAD	3	3	3	3	3	
84	6GR–23113–00	COLLAR	3	3	3	3	3	

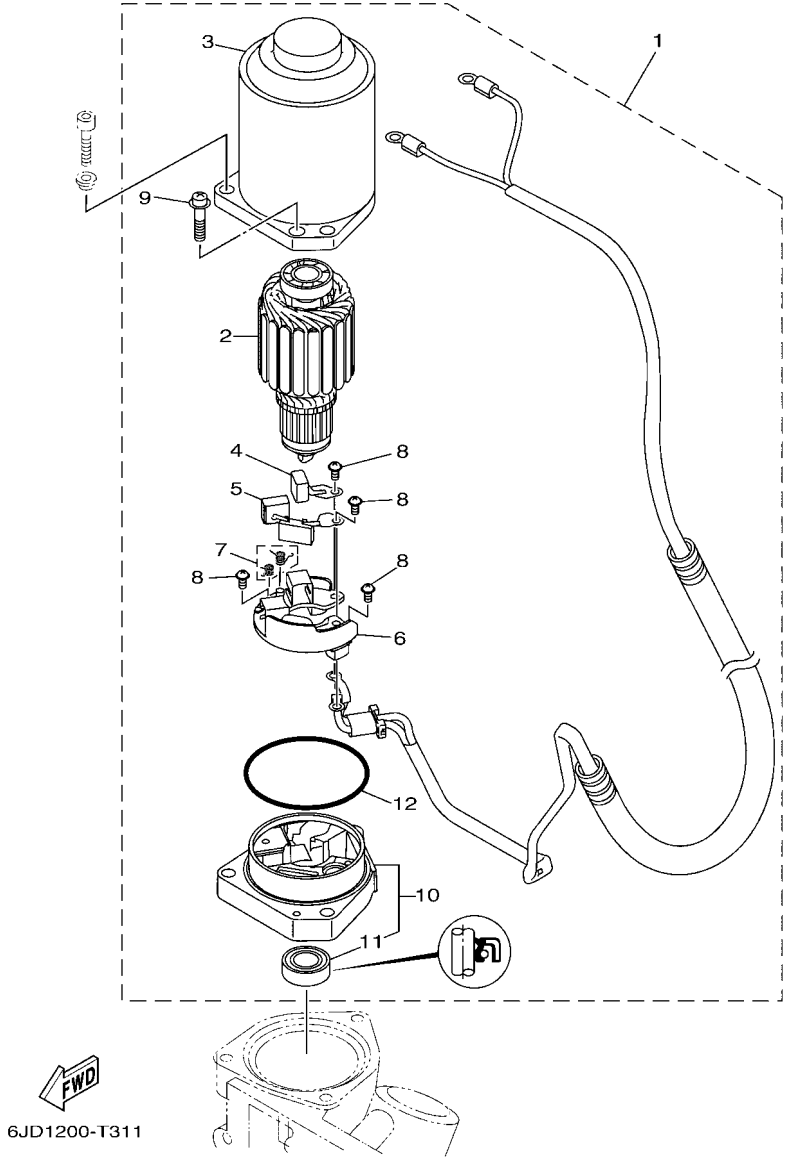

FIG. 32 POWER TRIM & TILT ASSY 2

REF. NO.	PART NO.	DESCRIPTION	XCA	UCA	NCA	NCA2	NCA2	REMARKS
1	69J–43880–11	MOTOR ASSY	1	1	1	1	1	
2	6GR–43805–00	.ARMATURE ASSY	1	1	1	1	1	
3	6GR–43804–00	.STATOR ASSY	1	1	1	1	1	
4	6GR–43892–00	.BRUSH 2	1	1	1	1	1	
5	6GR–82181–00	.CIRCUIT BREAKER COMP.	1	1	1	1	1	
6	6GR–4380F–00	.PLATE, BRUSH HOLDER	1	1	1	1	1	
7	6GR–4386K–00	.SPRING, BRUSH	1	1	1	1	1	
8	97602–04310	.SCREW, PAN HEAD WITH WASHER	4	4	4	4	4	
9	67C–43879–10	.SCREW, WITH WASHER	2	2	2	2	2	
10	69J–43881–11	.FRAME, END	1	1	1	1	1	
11	6GR–43882–01	..OIL SEAL	1	1	1	1	1	
12	6GR–43864–00	.O-RING	1	1	1	1	1	

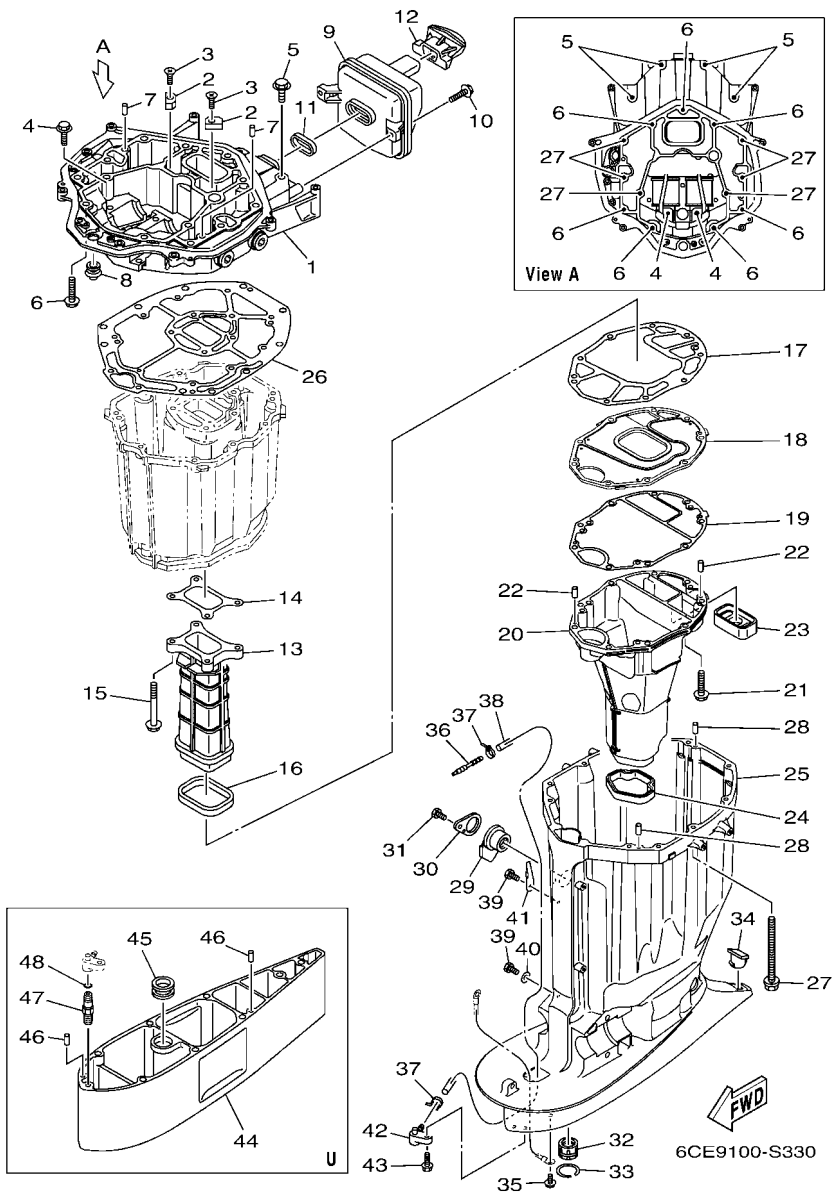

FIG. 33 UPPER CASING

REF. NO.	PART NO.	DESCRIPTION	XCA	UCA	NCA	NCA2	NCA2	REMARKS
1	6CE–41137–01	GUIDE, EXHAUST	1	1	1	1	1	
2	63P–11325–11	ANODE	2	2	2	2	2	
3	90151–06M02	SCREW, COUNTERSUNK	2	2	2	2	2	
4	90119–08182	BOLT, WITH WASHER	2	2	2	2	2	
5	97E75–10545	BOLT, HEXAGON W/W DEEP RECESS	4	4	4	4	4	
6	97E75–10535	BOLT, HEXAGON W/W DEEP RECESS	7	7	7	7	7	
7	93608–16M16	PIN, DOWEL	2	2	2	2	2	
8	6E5–42724–00	GROMMET	1	1	1	1	1	
9	6CB–14750–A0	SILENCER ASSY	1	1	1	1	1	
10	95D95–06020	BOLT, FLANGE DEEP RECESS	2	2	2	2	2	
11	6CB–14755–00	GASKET, SILENCER	1	1	1	1	1	
12	6CB–42769–01	SEAL, RUBBER	1	1	1	1	1	
13	6CB–41132–01	MANIFOLD, EXHAUST	1	1	1	1	1	
14	6CB–41134–00	GASKET, EXHAUST MANIFOLD	1	1	1	1	1	
15	97E75–08560	BOLT, HEXAGON W/W DEEP RECESS	4	4	4	4	4	
16	6CB–41138–00	SEAL, EXT. 1	1	1	1	1	1	
17	6CB–41135–00	GASKET, EXHAUST MANIFOLD	1	1	1	1	1	
18	6CE–45181–01	PLATE	1	1	1	1	1	
19	6CE–41136–00	GASKET, EXHAUST MANIFOLD 4	1	1	1	1	1	
20	6CE–14711–01	MUFFLER 1	1	1	1	1	1	
21	97E75–08535	BOLT, HEXAGON W/W DEEP RECESS	9	9	9	9	9	
22	93606–19M23	PIN, DOWEL	2	2	2	2	2	
23	6CE–45127–00	SEAL	1	1	1	1	1	
24	6CE–45123–00	GASKET, MUFFLER	1	1	1	1	1	
25	6CE–45111–01–8D	CASING, UPPER	1	1	1	1		GRAY
	6CE–45111–01–CE	CASING, UPPER					1	WHITE
26	6CB–45113–01	GASKET, UPPER CASING	1	1	1	1	1	

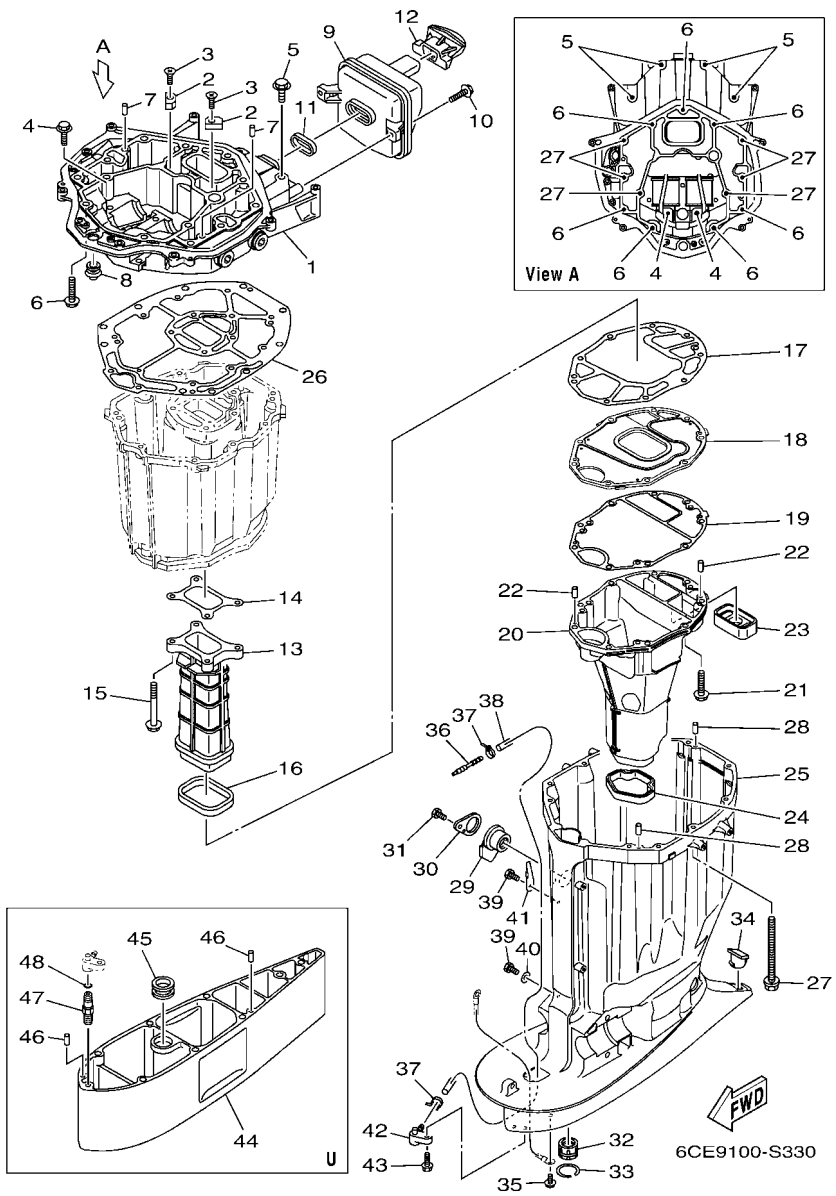

FIG. 33 UPPER CASING

REF. NO.	PART NO.	DESCRIPTION	XCA	UCA	NCA	NCA2	NCA2	REMARKS
27	90119–10007	BOLT, WITH WASHER	6	6	6	6	6	
28	93608–16M16	PIN, DOWEL	2	2	2	2	2	
29	6BB–15316–00	DAMPER 1	1	1	1	1	1	
30	6BB–45152–01	COVER, UPPER CASING 2	1	1	1	1	1	
31	97D95–06012	BOLT, HEXAGON DEEP RECESS	1	1	1	1	1	
32	69J–45318–01	BUSHING, DRIVE SHAFT	1	1	1	1	1	
33	93420–36M01	CIRCLIP	1	1	1	1	1	
34	61A–45155–00	CAP	1	1	1	1	1	
35	95D95–06010	BOLT, FLANGE DEEP RECESS	1	1	1	1	1	
36	6E5–83558–00	END, NIPPLE			1	1	1	EXCEPT LAN SPEED
37	90465–11M10	CLAMP	1	1				FOR LAN SPEED
	90465–11M10	CLAMP			2	2	2	EXCEPT LAN SPEED
38	90445–07034	HOSE (L2470)	1	1				FOR LAN SPEED
	90445–07032	HOSE (L1920)			1	1	1	EXCEPT LAN SPEED
39	97D95–06010	BOLT, HEXAGON DEEP RECESS	2	2	2	2	2	
40	90201–06M02	WASHER, PLATE	1	1	1	1	1	
41	90462–10061	CLAMP	1	1	1	1	1	
42	63P–45379–00	NIPPLE, HOSE	1	1	1	1	1	
43	90119–06287	BOLT, WITH WASHER	1	1	1	1	1	
44	6CE–45211–10–8D	EXTENSION		1				U(30.3")
45	6AW–44366–00	DAMPER, WATER SEAL 2		1				U(30.3")
46	93608–16M16	PIN, DOWEL		2				U(30.3")
47	63P–45378–00	NIPPLE, HOSE		1				U(30.3")
48	93210–07003	O-RING		1				U(30.3")

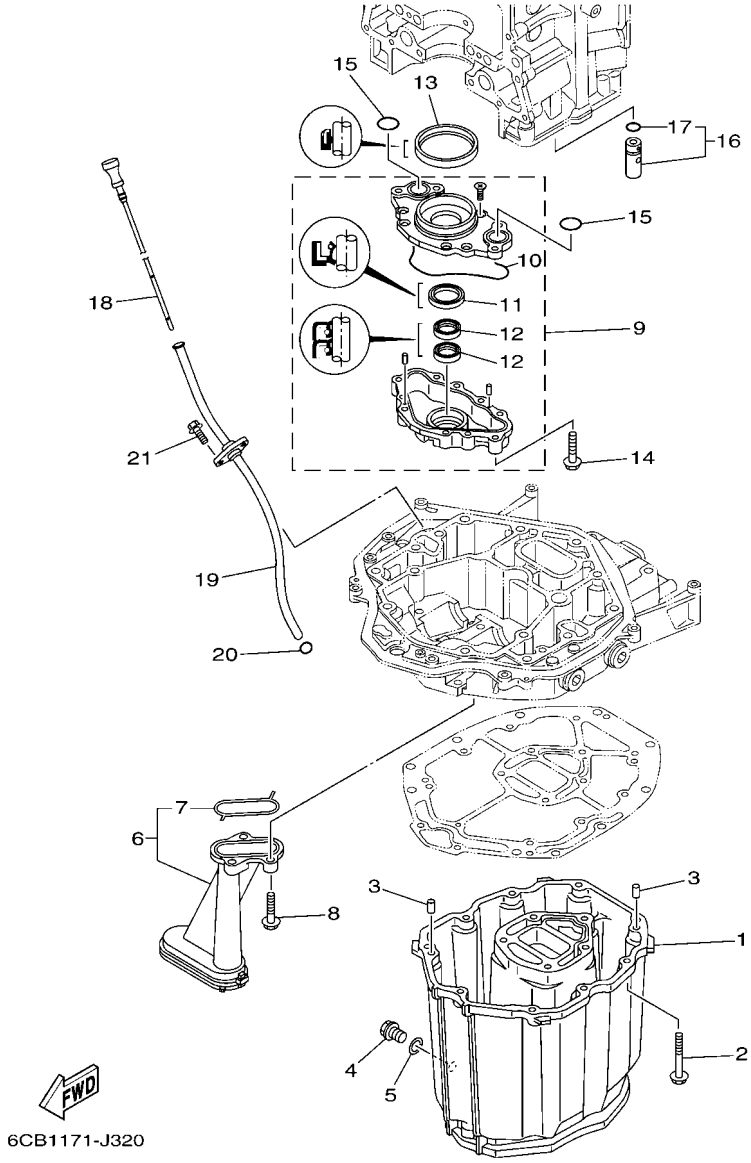

FIG. 34 OIL PAN

REF. NO.	PART NO.	DESCRIPTION	XCA	UCA	NCA	NCA2	NCA2	REMARKS
1	6CB–15311–01	OIL PAN	1	1	1	1	1	
2	97E75–08535	BOLT, HEXAGON W/W DEEP RECESS	10	10	10	10	10	
3	93608–16M16	PIN, DOWEL	2	2	2	2	2	
4	90340–14M06	PLUG, STRAIGHT SCREW	1	1	1	1	1	
5	90430–14M09	GASKET	1	1	1	1	1	
6	6CB–13411–00	STRAINER, OIL	1	1	1	1	1	
7	6AW–13415–00	.SEAL, OIL STRAINER	1	1	1	1	1	
8	95812–06025	BOLT, FLANGE	3	3	3	3	3	
9	6CB–13300–00	OIL PUMP ASSY	1	1	1	1	1	
10	6CB–13329–00	.GASKET, PUMP COVER	1	1	1	1	1	
11	6AW–13119–00	.OIL SEAL	1	1	1	1	1	
12	69J–13631–00	.OIL SEAL	2	2	2	2	2	
13	6CB–11355–00	SEAL, CYLINDER 1	1	1	1	1	1	
14	95D75–06040	BOLT, FLANGE DEEP RECESS	4	4	4	4	4	
15	93210–26658	O-RING	2	2	2	2	2	
16	6CB–13490–00	RELIEF VALVE ASSY	1	1	1	1	1	
17	6CB–13473–00	.O-RING	1	1	1	1	1	
18	6CB–15362–00	PLUG, OIL LEVEL	1	1	1	1	1	
19	6CB–15377–00	GUIDE, INLET	1	1	1	1	1	
20	93210–19MJ3	O-RING	1	1	1	1	1	
21	95D95–06016	BOLT, FLANGE DEEP RECESS	2	2	2	2	2	

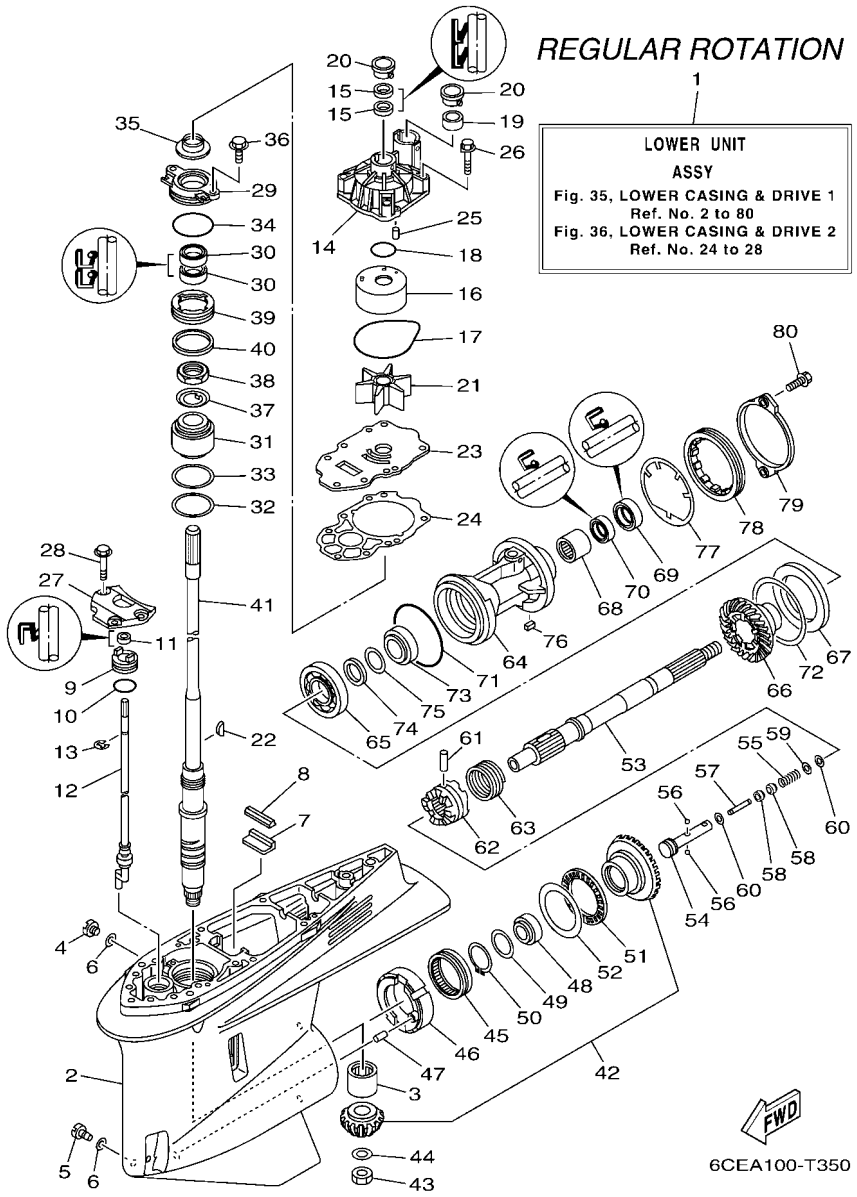

FIG. 35 LOWER CASING & DRIVE 1

REF. NO.	PART NO.	DESCRIPTION	XCA	UCA	NCA	NCA2	NCA2	REMARKS
1	6CE–45300–04–8D	LOWER UNIT ASSY	1					X(25.3"),RH
	6CE–45300–14–8D	LOWER UNIT ASSY		1				U(30.3"),RH
2	6CE–45301–00–8D	CASING, LOWER	1	1				
3	93311–83280	BEARING	1	1				
4	90340–08002	PLUG, STRAIGHT SCREW	1	1				
5	688–45341–10	PLUG, DRAIN	1	1				
6	90430–08003	GASKET	2	2				
7	663–45376–00	GUIDE, SEAL DAMPER	1	1				
8	6CE–45375–00	DAMPER, SEAL	1	1				
9	6CE–45321–10	PLATE	1					X(25.3")
	6CE–45321–20	PLATE		1				U(30.3")
10	93210–33M49	O-RING	1	1				
11	93106–09014	OIL SEAL	1					X(25.3")
	93106–10001	OIL SEAL		1				U(30.3")
12	6CE–44150–00	SHIFT CAM ASSY	1					X(25.3"),RH
	6CE–44150–10	SHIFT CAM ASSY		1				U(30.3"),RH
13	99001–08600	CIRCLIP	1					X(25.3")
	99001–09600	CIRCLIP		1				U(30.3")
14	6CE–44311–01	HOUSING, WATER PUMP	1	1				
15	93104–22M07	OIL SEAL	2	2				
16	6AW–44322–00	INSERT, CARTRIDGE	1	1				
17	93210–94003	O-RING	1	1				
18	93210–37160	O-RING	1	1				
19	6AW–44365–00	DAMPER, WATER SEAL 1	1	1				
20	6AW–44312–00	COVER, WATER PUMP HOUSING	2	2				
21	6CE–44352–00	IMPELLER	1	1				
22	90280–04002	KEY, WOODRUFF	1	1				

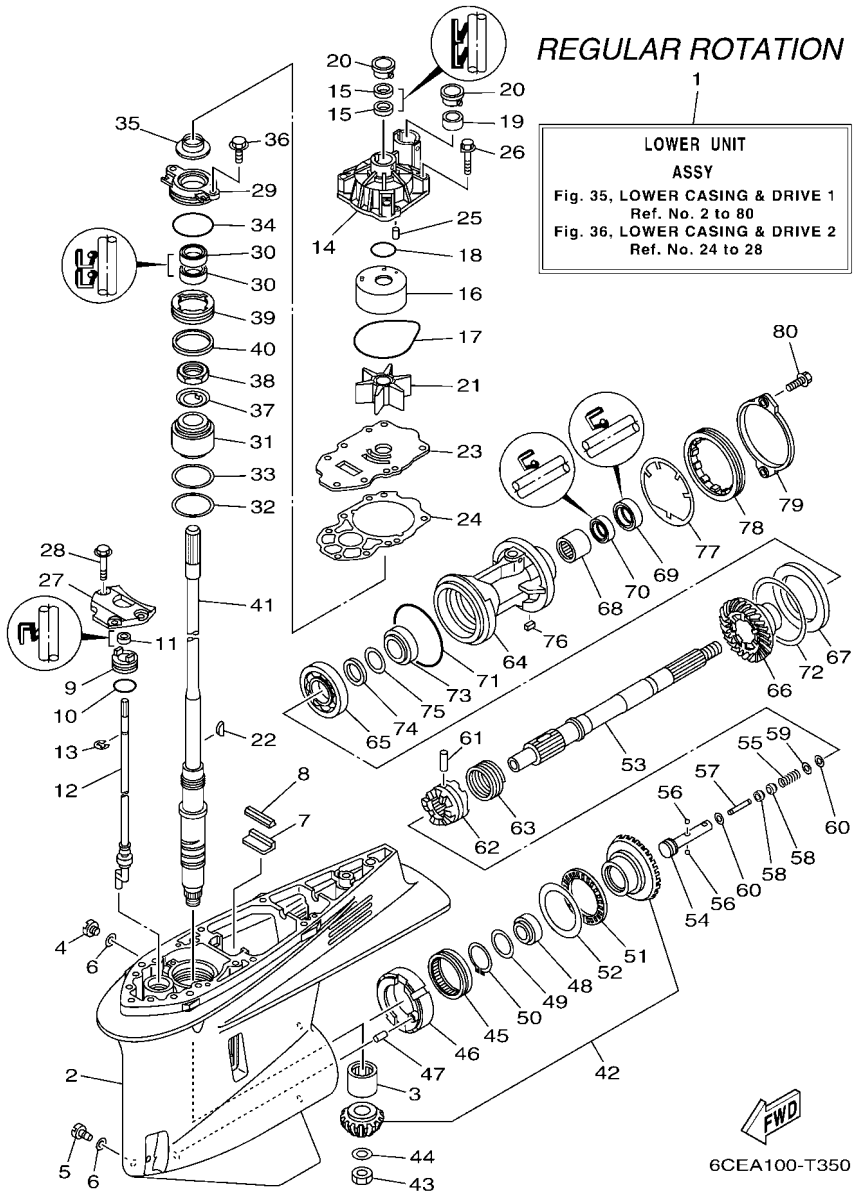

FIG. 35 LOWER CASING & DRIVE 1

REF. NO.	PART NO.	DESCRIPTION	XCA	UCA	NCA	NCA2	NCA2	REMARKS
23	6CE–44323–01	OUTER PLATE, CARTRIDGE	1	1				
24	6CE–44315–00	GASKET, WATER PUMP	1	1				
25	93606–12019	PIN, DOWEL	2	2				
26	90119–08191	BOLT, WITH WASHER	4	4				
27	6CB–44312–00	COVER, WATER PUMP HOUSING	1	1				
28	90119–08180	BOLT, WITH WASHER	3	3				
29	6CE–45335–00–9S	HOUSING, OIL SEAL	1	1				
30	93101–28019	OIL SEAL	2	2				
31	93399–99966	BEARING	1	1				
32	90201–62008	WASHER, PLATE	1	1				
33	6CE–45587–00	SHIM (T:0.10MM)	1	1				UR
	6CE–45587–10	SHIM (T:0.12MM)	1	1				UR
	6CE–45587–20	SHIM (T:0.15MM)	1	1				UR
	6CE–45587–30	SHIM (T:0.18MM)	1	1				UR
	6CE–45587–40	SHIM (T:0.30MM)	1	1				UR
	6CE–45587–50	SHIM (T:0.40MM)	1	1				UR
	6CE–45587–60	SHIM (T:0.50MM)	1	1				UR
34	93210–64488	O-RING	1	1				
35	6AW–45344–00	COVER, OIL SEAL	1	1				
36	97E95–08520	BOLT, HEXAGON W/W DEEP RECESS	2	2				
37	90214–30003	WASHER, CLAW	1	1				
38	90170–30M18	NUT	1	1				
39	6CE–45244–00	NUT	1	1				
40	6CE–45539–00	SPACER 2	1	1				
41	6CE–45501–00	DRIVE SHAFT COMP.	1					X(25.3")
	6CE–45501–10	DRIVE SHAFT COMP.		1				U(30.3")
42	6CE–45550–00	GEAR SET	1	1				

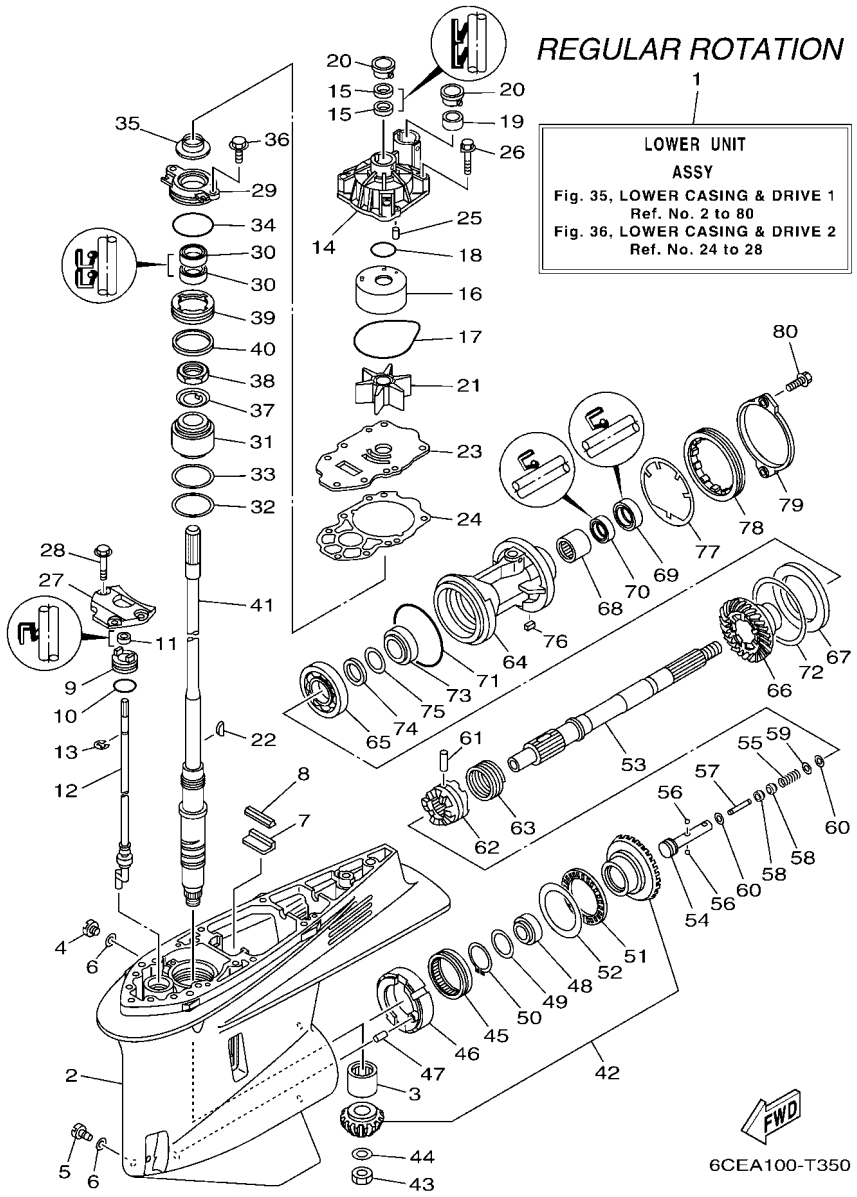

FIG. 35 LOWER CASING & DRIVE 1

REF. NO.	PART NO.	DESCRIPTION	XCA	UCA	NCA	NCA2	NCA2	REMARKS
43	90170–16M19	NUT	1	1				
44	90201–16M00	WASHER, PLATE	1	1				
45	93311–85894	BEARING	1	1				
46	6CB–45824–00	ADAPTER	1	1				
47	93608–16M16	PIN, DOWEL	1	1				
48	93332–000A4	BEARING	1	1				
49	90201–41008	WASHER, PLATE	1	1				
50	99009–47500	CIRCLIP	1	1				
51	93340–67011	BEARING	1	1				
52	6CB–45567–00	SHIM (T:2.00MM)	1	1				UR
	6CB–45567–10	SHIM (T:2.03MM)	1	1				UR
	6CB–45567–20	SHIM (T:2.06MM)	1	1				UR
	6CB–45567–30	SHIM (T:2.09MM)	1	1				UR
	6CB–45567–40	SHIM (T:2.12MM)	1	1				UR
	6CB–45567–50	SHIM (T:2.15MM)	1	1				UR
53	6CB–45611–00	SHAFT, PROPELLER	1	1				
54	6CB–45634–00	SLIDE, SHIFT	1	1				
55	90501–10M77	SPRING, COMPRESSION	1	1				
56	93501–04011	BALL	2	2				
57	6H1–45668–00	SHAFT, FREE 1	1	1				
58	61A–45635–00	PLUNGER, SHIFT	2	2				
59	90201–02M00	WASHER, PLATE	1	1				
60	90183–02M03	NUT, SPRING	2	2				
61	90250–08M07	PIN, STRAIGHT	1	1				
62	6CE–45631–00	CLUTCH, DOG	1	1				
63	6E5–45633–01	RING, CROSS PIN	1	1				
64	6CE–45332–00–CA	HOUSING, BEARING	1	1				

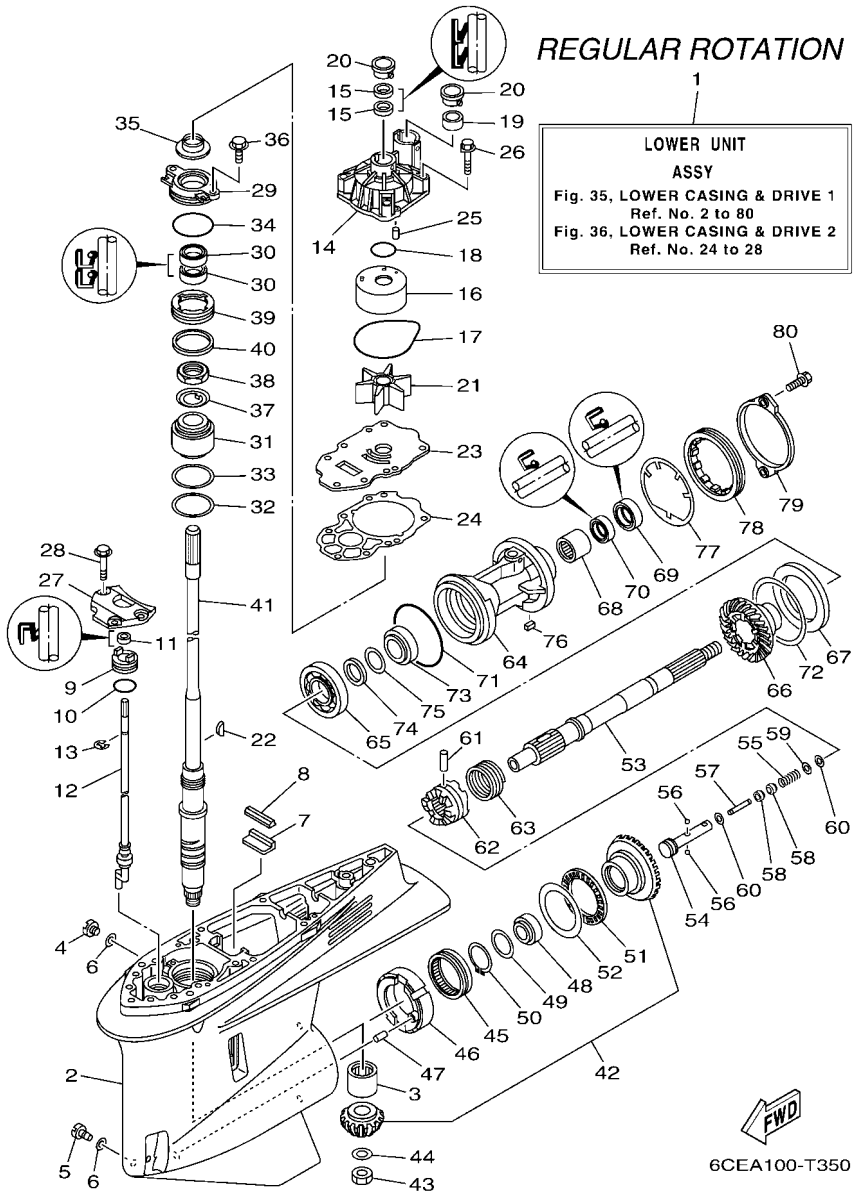

FIG. 35 LOWER CASING & DRIVE 1

REF. NO.	PART NO.	DESCRIPTION	XCA	UCA	NCA	NCA2	NCA2	REMARKS
65	93306–209U0	BEARING	1	1				
66	6CE–45571–00	GEAR 2 (21T)	1	1				
67	6CB–45576–00	WASHER, THRUST 2	1	1				
68	93315–43061	BEARING	1	1				
69	93101–30030	OIL SEAL	1	1				
70	93101–30019	OIL SEAL	1	1				
71	93211–02001	O-RING	1	1				
72	6CB–45577–00	SHIM (T:0.10MM)	1	1				UR
	6CB–45577–10	SHIM (T:0.12MM)	1	1				UR
	6CB–45577–20	SHIM (T:0.15MM)	1	1				UR
	6CB–45577–30	SHIM (T:0.18MM)	1	1				UR
	6CB–45577–40	SHIM (T:0.30MM)	1	1				UR
	6CB–45577–50	SHIM (T:0.40MM)	1	1				UR
	6CB–45577–60	SHIM (T:0.50MM)	1	1				UR
73	93332–000A5	BEARING	1	1				
74	90201–32008	WASHER, PLATE	1	1				
75	676–45567–00	SHIM (T:0.7MM)	1	1				UR
	676–45567–10	SHIM (T:0.8MM)	1	1				UR
	676–45567–20	SHIM (T:0.9MM)	1	1				UR
	676–45567–30	SHIM (T:1.0MM)	1	1				UR
	676–45567–40	SHIM (T:1.1MM)	1	1				UR
	676–45567–50	SHIM (T:1.2MM)	1	1				UR
76	90282–05008	KEY, STRAIGHT	1	1				
77	6CB–45383–00	WASHER, CLAW	1	1				
78	6CB–45384–00	NUT	1	1				
79	6CE–45361–10	CAP, LOWER CASING	1	1				
80	90105–08M61	BOLT, FLANGE	2	2				

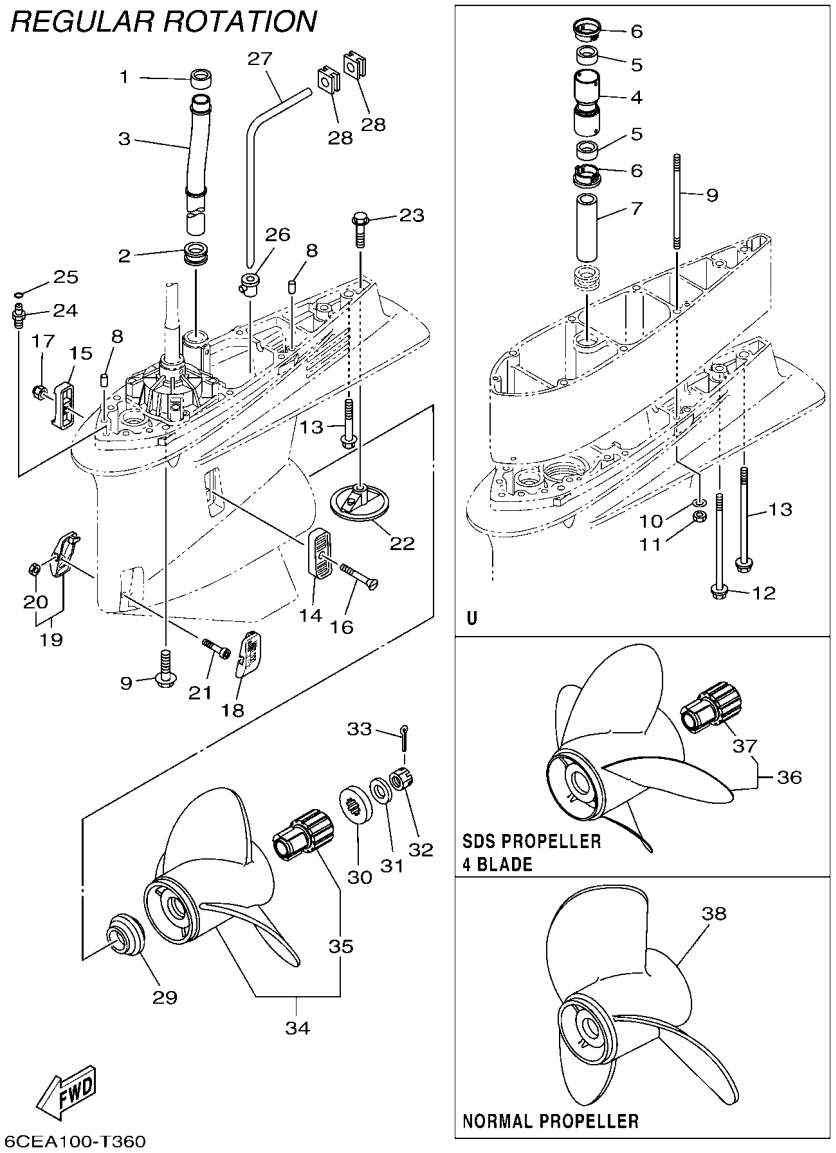

FIG. 36 LOWER CASING & DRIVE 2

REF. NO.	PART NO.	DESCRIPTION	XCA	UCA	NCA	NCA2	NCA2	REMARKS
1	6AW–44365–00	DAMPER, WATER SEAL 1	1	1	1	1	1	
2	6AW–44366–00	DAMPER, WATER SEAL 2	1	1	1	1	1	
3	6CE–44361–00	TUBE, WATER 1	1	1	1	1	1	
4	6CE–44362–00	TUBE, WATER 2		1				U(30.3")
5	6AW–44365–00	DAMPER, WATER SEAL 1		2				U(30.3")
6	6AW–44312–00	COVER, WATER PUMP HOUSING		2				U(30.3")
7	6AW–44363–00	TUBE, WATER 3		1				U(30.3")
8	93608–16M16	PIN, DOWEL	2	2				
9	90119–10038	BOLT, WITH WASHER	7					X(25.3")
	90116–10041	BOLT, STUD		6				U(30.3")
10	90201–10048	WASHER, PLATE		6				U(30.3")
11	90170–10009	NUT		6				U(30.3")
12	90119–10009	BOLT, WITH WASHER		1				U(30.3")
13	97E75–10570	BOLT, HEXAGON W/W DEEP RECESS	1					X(25.3")
	90119–10008	BOLT, WITH WASHER		1				U(30.3")
14	6P2–45214–00	COVER, WATER INLET 1	1	1				
15	6P2–45215–00	COVER, WATER INLET 2	1	1				
16	90152–05M08	SCREW, COUNTERSUNK	1	1				
17	90185–05002	NUT, NYLON	1	1				
18	6CE–45224–00	COVER, WATER INLET 3	1	1				
19	6CE–45225–00	COVER, WATER INLET 4	1	1				
20	90185–05002	.NUT, NYLON	1	1				
21	90110–05039	BOLT, HEXAGON SOCKET HEAD	1	1				
22	6CE–45373–00	ANODE	1	1				
23	90105–10M00	BOLT, FLANGE	1	1				
24	63P–45378–00	NIPPLE, HOSE	1	1				
25	93210–07003	O-RING	1	1				

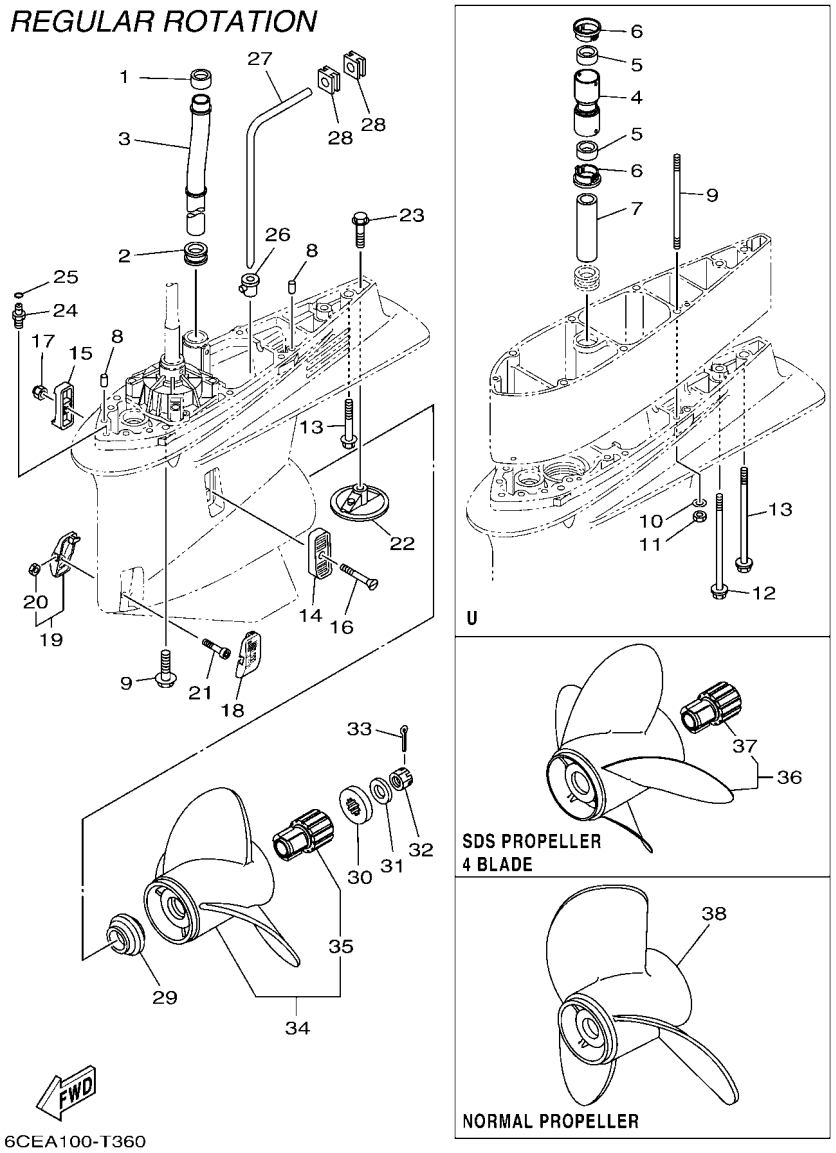

FIG. 36 LOWER CASING & DRIVE 2

REF. NO.	PART NO.	DESCRIPTION	XCA	UCA	NCA	NCA2	NCA2	REMARKS
26	6D0–44367–00	DAMPER, WATER SEAL 3	1	1				
27	6D0–44362–01	TUBE, WATER 2	1	1				
28	6D0–44366–00	DAMPER, WATER SEAL 2	2	2				
29	69J–45987–00	SPACER 1	1	1				
30	688–45997–01	SPACER 2	1	1				
31	92990–18200	WASHER	1	1				
32	90171–18M04	NUT, CASTLE	1	1				
33	91490–40030	PIN. COTTER	1	1				
34	6CE–45930–20	PROPELLER (3X15-3/4"X13"-T)	1	1				UR SDS 3 BLADE
	6CE–45976–20	PROPELLER (3X15-3/4"X15"-T)	1	1				UR SDS 3 BLADE
	6CE–45978–20	PROPELLER (3X15-1/2"X17"-T)	1	1				UR SDS 3 BLADE
	6CE–45970–20	PROPELLER (3X15-1/4"X19"-T)	1	1				UR SDS 3 BLADE
	6CE–45972–20	PROPELLER (3X15"X21"-T)	1	1				UR SDS 3 BLADE
	6CE–45974–20	PROPELLER (3X14-3/4"X23"-T)	1	1				UR SDS 3 BLADE
35	6CE–45C81–10	.DAMPER RUBBER, PROPELLER 1	1	1				
36	6CE–45B70–20	PROPELLER (4X15"X21"-T)	1	1				UR SDS 4 BLADE
	6CE–45B72–20	PROPELLER (4X15"X22"-T)	1	1				UR SDS 4 BLADE
	6CE–45B74–20	PROPELLER (4X15"X23"-T)	1	1				UR SDS 4 BLADE
37	6CE–45C81–10	.DAMPER RUBBER, PROPELLER 1	1	1				
38	6D0–45970–10	PROPELLER (3X15-1/4"X19"-T)	1	1				AP NORMAL PROP.

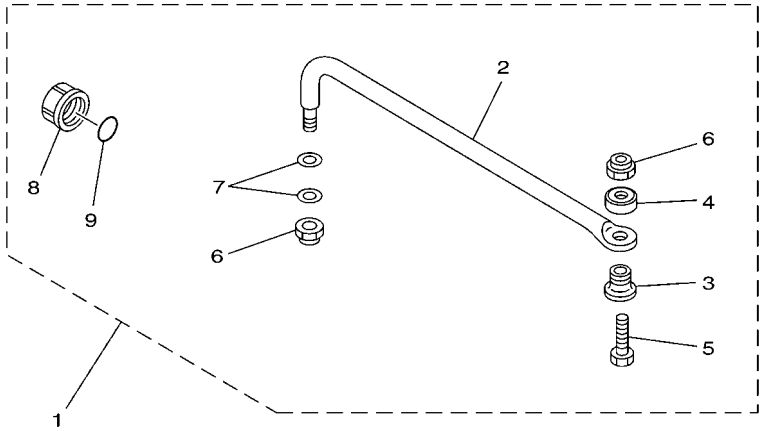

67H0100-9290

FIG. 37 STEERING GUIDE

REF. NO.	PART NO.	DESCRIPTION	XCA	UCA	NCA	NCA2	NCA2	REMARKS
1	6E5–61350–02	STEERING GUIDE ATTACHMENT KIT	1	1	1	1	1	AP
2	6E5–61351–01	.ROD, STEERING LINK	1	1	1	1	1	
3	90387–10M61	.COLLAR	1	1	1	1	1	
4	90560–12M01	.SPACER	1	1	1	1	1	
5	6E5–61355–00	.BOLT	1	1	1	1	1	
6	90185–09M01	.NUT, SELF-LOCKING	2	2	2	2	2	
7	90201–10M20	.WASHER, PLATE	2	2	2	2	2	
8	6E5–43145–01	.CAP, CLAMP BRACKET	1	1	1	1	1	
9	93210–16275	.O-RING	1	1	1	1	1	

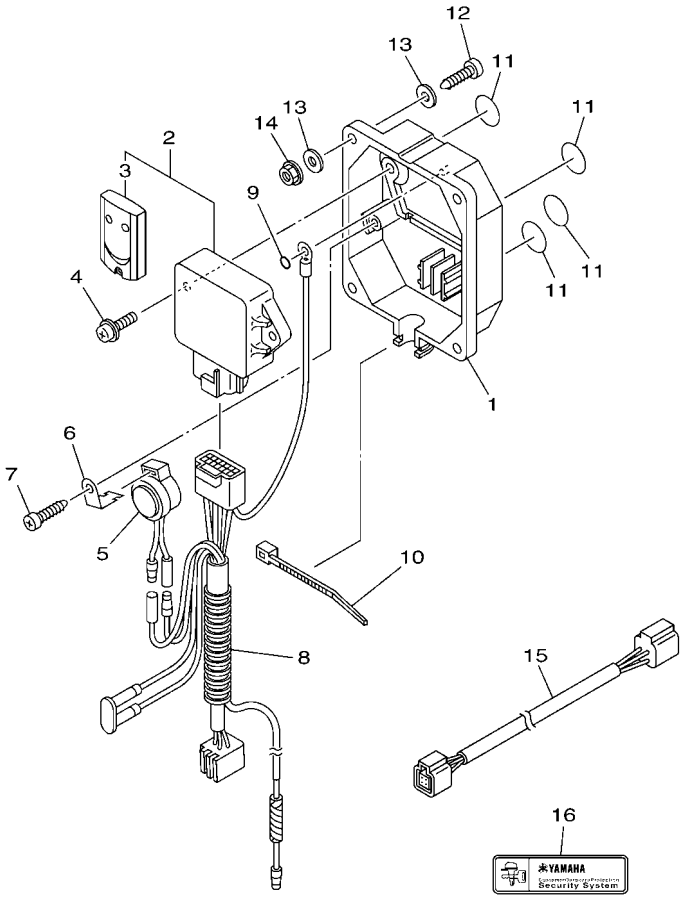

6CJ1100-K370

FIG. 38 OPTIONAL PARTS 1

REF. NO.	PART NO.	DESCRIPTION	XCA	UCA	NCA	NCA2	NCA2	REMARKS
1	6Y8–86267–00	CASE COMPLETE 1	1	1	1	1	1	
2	6Y8–86260–12	REMOTE CONTROL UNIT ASSY	1	1	1	1	1	
3	6AA–86261–22	.XMTR. COMP.	2	2	2	2	2	
4	97980–06216	SCREW, WITH WASHER	2	2	2	2	2	
5	6X4–83383–00	BUZZER	1	1	1	1	1	
6	6X4–83386–00	STAY, BUZZER	1	1	1	1	1	
7	97780–60620	SCREW, TAPPING	1	1	1	1	1	
8	6Y8–82509–10	WIRE, SUB LEAD	1	1	1	1	1	
9	93210–04279	O-RING	1	1	1	1	1	
10	90465–11M10	CLAMP	1	1	1	1	1	
11	6Y8–8454G–00	PATCH 1	4	4	4	4	4	
12	90167–06M00	SCREW, TAPPING	4	4	4	4	4	UR
	97880–06035	SCREW, PAN HEAD	4	4	4	4	4	UR
13	90201–06M30	WASHER, PLATE	8	8	8	8	8	
14	95780–06300	NUT, FLANGE	4	4	4	4	4	
15	6Y8–82521–11	2FT PIGTAIL BUS	1	1	1	1	1	
16	6Y8–48277–00	STICKER 1	4	4	4	4	4	

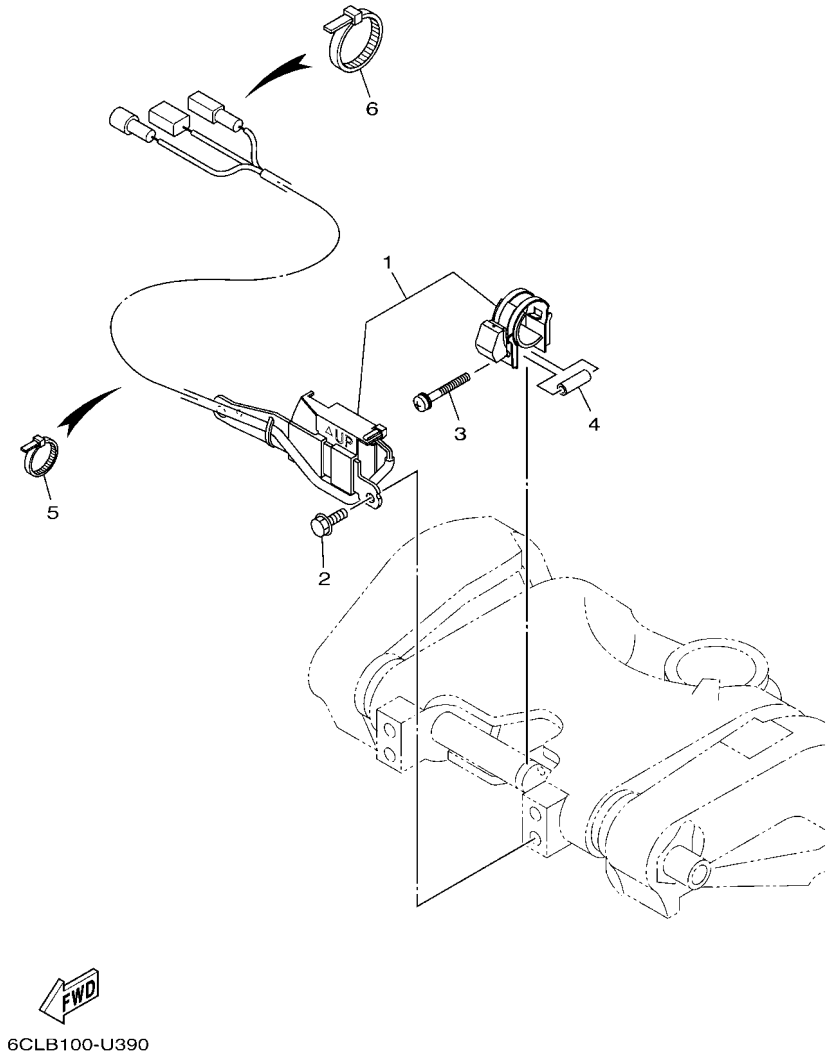

FIG. 39 OPTIONAL PARTS 2

REF. NO.	PART NO.	DESCRIPTION	XCA	UCA	NCA	NCA2	NCA2	REMARKS
1	6CE–825E0–01	TILT LIMIT SWITCH ASSY	1	1	1	1	1	
2	97E95–06516	BOLT, HEXAGON W/W DEEP RECESS	2	2	2	2	2	
3	90159–05059	SCREW, WITH WASHER	1	1	1	1	1	
4	90387–05004	COLLAR	1	1	1	1	1	
5	90465–11M10	CLAMP	9	9	9	9	9	
6	90465–13M18	CLAMP	1	1	1	1	1	

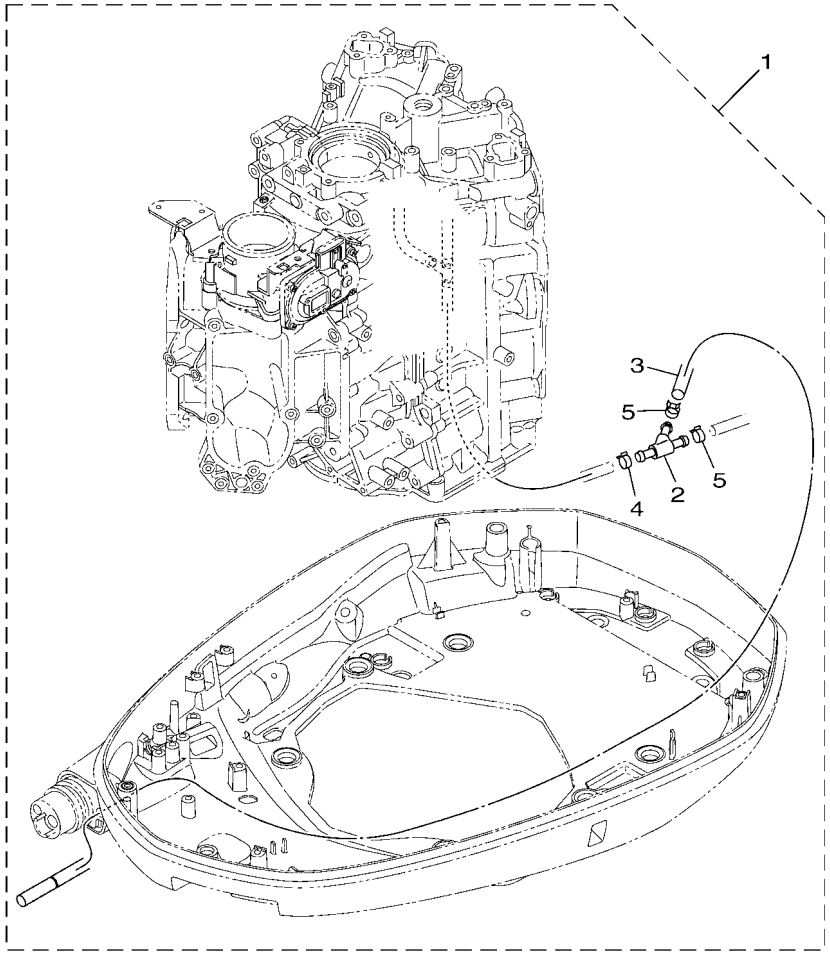

6CLB100-U400

FIG. 40 OPTIONAL PARTS 3

REF. NO.	PART NO.	DESCRIPTION	XCA	UCA	NCA	NCA2	NCA2	REMARKS
1	*	FLUSHING HOSE KIT	1	1	1	1	1	LM
2	6DA–13758–00	.PIPE, JOINT	1	1	1	1	1	
3	6CE–14987–00	.HOSE	1	1	1	1	1	
4	90467–140A8	.CLIP	1	1	1	1	1	
5	90467–140A9	.CLIP	2	2	2	2	2	

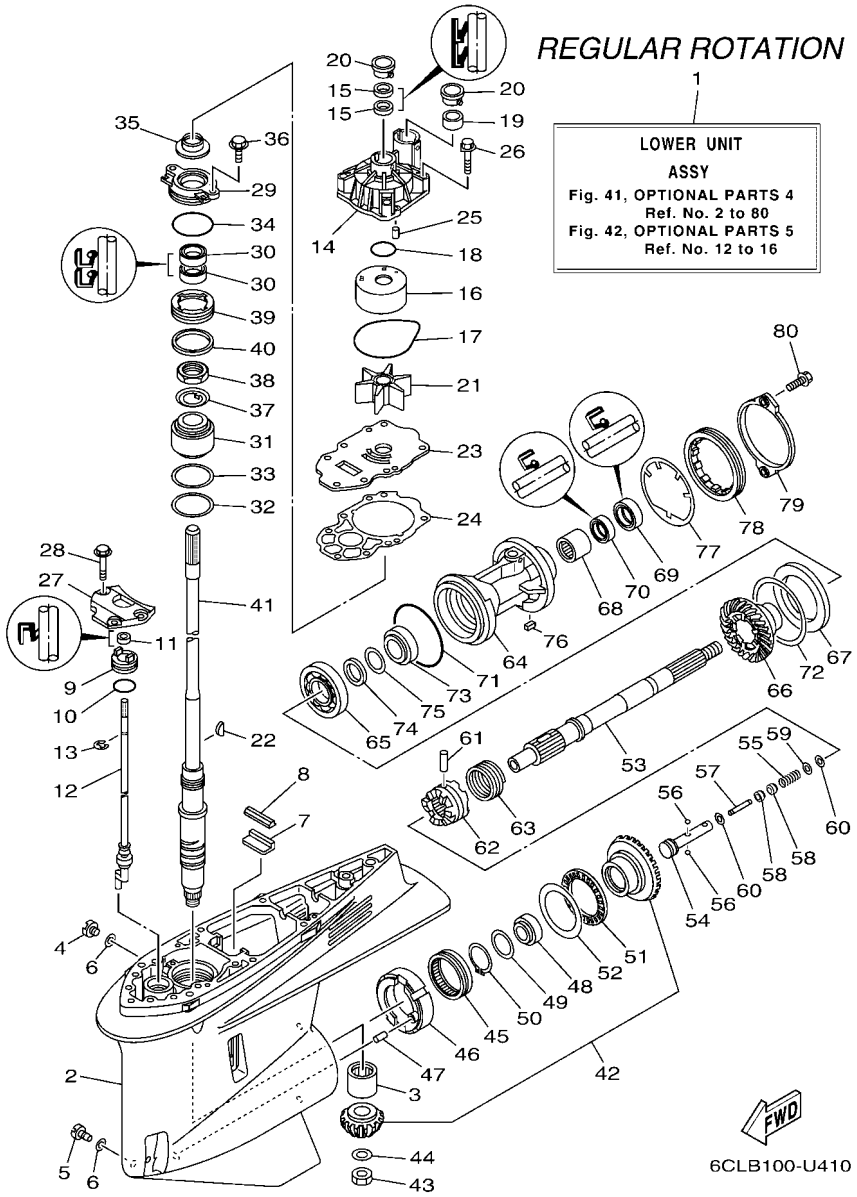

FIG. 41 OPTIONAL PARTS 4

REF. NO.	PART NO.	DESCRIPTION	XCA	UCA	NCA	NCA2	NCA2	REMARKS
1	6CE–45300–04–8D	LOWER UNIT ASSY			1	1		GRAY X(25.3"),RH
	6CE–45300–04–CE	LOWER UNIT ASSY					1	WHITE X(25.3"),RH
	6CE–45300–14–8D	LOWER UNIT ASSY			1	1		GRAY U(30.3"),RH
	6CE–45300–14–CE	LOWER UNIT ASSY					1	WHITE U(30.3"),RH
	6CE–45300–23–8D	LOWER UNIT ASSY			1	1		GRAY E(35.3"),RH
	6CE–45300–23–CE	LOWER UNIT ASSY					1	WHITE E(35.3"),RH
2	6CE–45301–00–8D	CASING, LOWER			1	1		GRAY
	6CE–45301–00–CE	CASING, LOWER					1	WHITE
3	93311–83280	BEARING			1	1	1	
4	90340–08002	PLUG, STRAIGHT SCREW			1	1	1	
5	688–45341–10	PLUG, DRAIN			1	1	1	
6	90430–08003	GASKET			2	2	2	
7	663–45376–00	GUIDE, SEAL DAMPER			1	1	1	
8	6CE–45375–00	DAMPER, SEAL			1	1	1	
9	6CE–45321–10	PLATE			1	1	1	X(25.3")
	6CE–45321–20	PLATE			1	1	1	U(30.3"),E(35.3")
10	93210–33M49	O-RING			1	1	1	
11	93106–09014	OIL SEAL			1	1	1	X(25.3")
	93106–10001	OIL SEAL			1	1	1	U(30.3"),E(35.3")
12	6CE–44150–00	SHIFT CAM ASSY			1	1	1	X(25.3"),RH
	6CE–44150–10	SHIFT CAM ASSY			1	1	1	U(30.3"),RH
	6CE–44150–20	SHIFT CAM ASSY			1	1	1	E(35.3"),RH
13	99001–08600	CIRCLIP			1	1	1	X(25.3")
	99001–09600	CIRCLIP			1	1	1	U(30.3"),E(35.3")
14	6CE–44311–01	HOUSING, WATER PUMP			1	1	1	
15	93104–22M07	OIL SEAL			2	2	2	
16	6AW–44322–00	INSERT, CARTRIDGE			1	1	1	

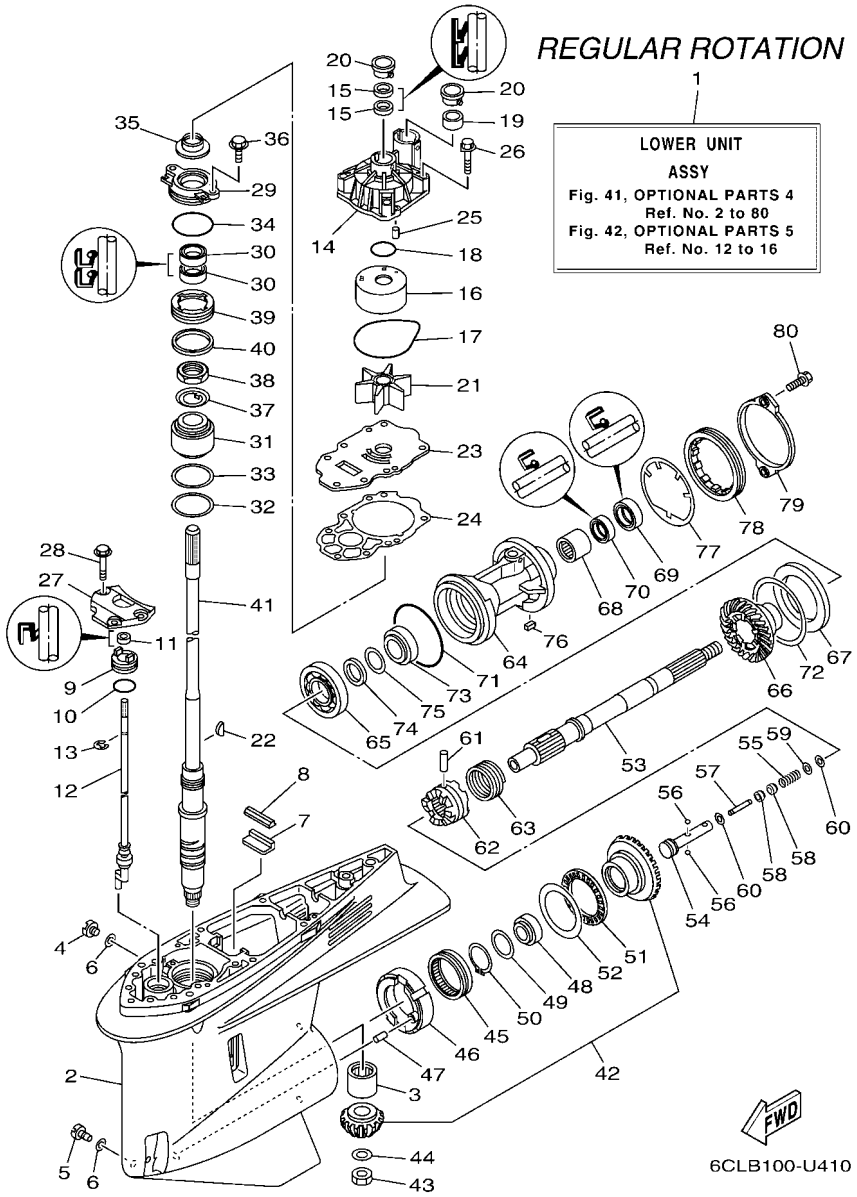

FIG. 41 OPTIONAL PARTS 4

REF. NO.	PART NO.	DESCRIPTION	XCA	UCA	NCA	NCA2	NCA2	REMARKS
17	93210–94003	O-RING			1	1	1	
18	93210–37160	O-RING			1	1	1	
19	6AW–44365–00	DAMPER, WATER SEAL 1			1	1	1	
20	6AW–44312–00	COVER, WATER PUMP HOUSING			2	2	2	
21	6CE–44352–00	IMPELLER			1	1	1	
22	90280–04002	KEY, WOODRUFF			1	1	1	
23	6CE–44323–01	OUTER PLATE, CARTRIDGE			1	1	1	
24	6CE–44315–00	GASKET, WATER PUMP			1	1	1	
25	93606–12019	PIN, DOWEL			2	2	2	
26	90119–08191	BOLT, WITH WASHER			4	4	4	
27	6CB–44312–00	COVER, WATER PUMP HOUSING			1	1	1	
28	90119–08180	BOLT, WITH WASHER			3	3	3	
29	6CE–45335–00–9S	HOUSING, OIL SEAL			1	1	1	
30	93101–28019	OIL SEAL			2	2	2	
31	93399–99966	BEARING			1	1	1	
32	90201–62008	WASHER, PLATE			1	1	1	
33	6CE–45587–00	SHIM (T:0.10MM)			1	1	1	UR
	6CE–45587–10	SHIM (T:0.12MM)			1	1	1	UR
	6CE–45587–20	SHIM (T:0.15MM)			1	1	1	UR
	6CE–45587–30	SHIM (T:0.18MM)			1	1	1	UR
	6CE–45587–40	SHIM (T:0.30MM)			1	1	1	UR
	6CE–45587–50	SHIM (T:0.40MM)			1	1	1	UR
	6CE–45587–60	SHIM (T:0.50MM)			1	1	1	UR
34	93210–64488	O-RING			1	1	1	
35	6AW–45344–00	COVER, OIL SEAL			1	1	1	
36	97E95–08520	BOLT, HEXAGON W/W DEEP RECESS			2	2	2	
37	90214–30003	WASHER, CLAW			1	1	1	

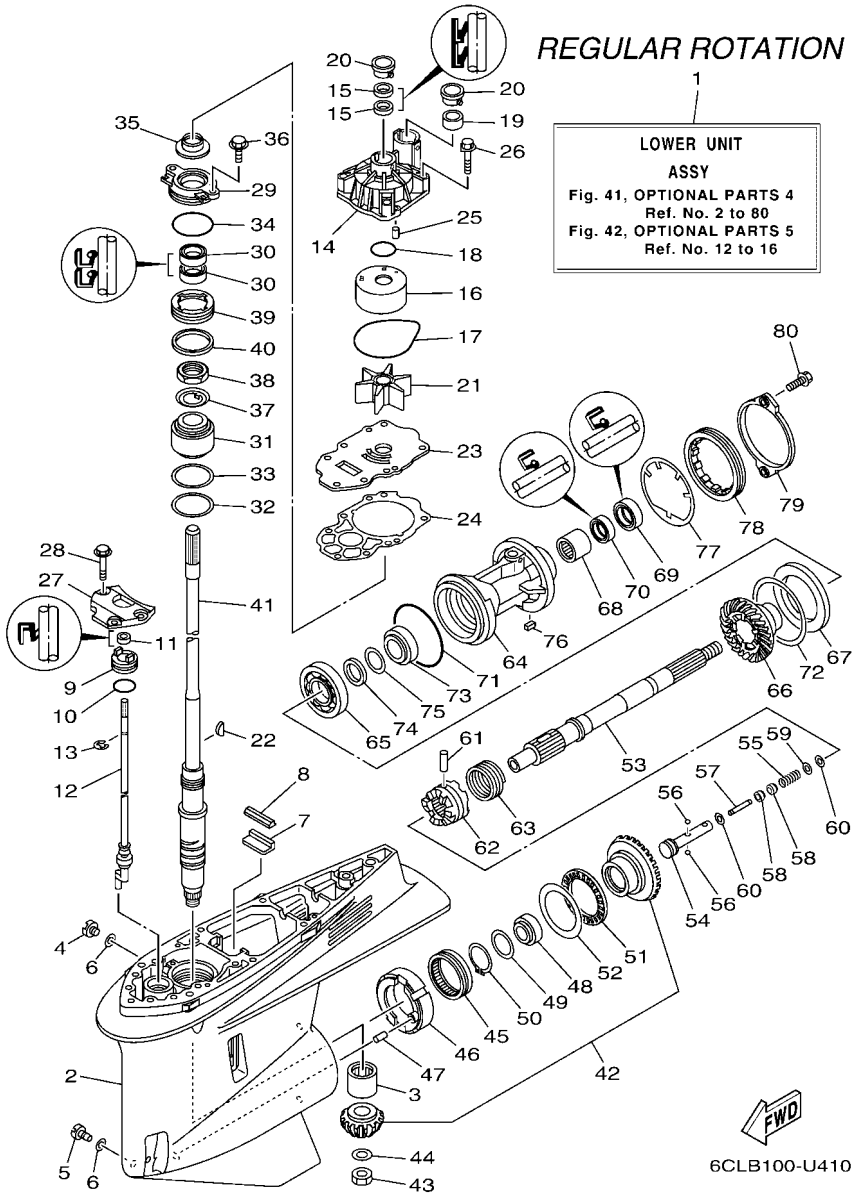

FIG. 41 OPTIONAL PARTS 4

REF. NO.	PART NO.	DESCRIPTION	XCA	UCA	NCA	NCA2	NCA2	REMARKS
38	90170–30M18	NUT			1	1	1	
39	6CE–45244–00	NUT			1	1	1	
40	6CE–45539–00	SPACER 2			1	1	1	
41	6CE–45501–00	DRIVE SHAFT COMP.			1	1	1	X(25.3")
	6CE–45501–10	DRIVE SHAFT COMP.			1	1	1	U(30.3")
	6CE–45501–20	DRIVE SHAFT COMP.			1	1	1	E(35.3")
42	6CE–45550–00	GEAR SET			1	1	1	
43	90170–16M19	NUT			1	1	1	
44	90201–16M00	WASHER, PLATE			1	1	1	
45	93311–85894	BEARING			1	1	1	
46	6CB–45824–00	ADAPTER			1	1	1	
47	93608–16M16	PIN, DOWEL			1	1	1	
48	93332–000A4	BEARING			1	1	1	
49	90201–41008	WASHER, PLATE			1	1	1	
50	99009–47500	CIRCLIP			1	1	1	
51	93340–67011	BEARING			1	1	1	
52	6CB–45567–00	SHIM (T:2.00MM)			1	1	1	UR
	6CB–45567–10	SHIM (T:2.03MM)			1	1	1	UR
	6CB–45567–20	SHIM (T:2.06MM)			1	1	1	UR
	6CB–45567–30	SHIM (T:2.09MM)			1	1	1	UR
	6CB–45567–40	SHIM (T:2.12MM)			1	1	1	UR
	6CB–45567–50	SHIM (T:2.15MM)			1	1	1	UR
53	6CB–45611–00	SHAFT, PROPELLER			1	1	1	
54	6CB–45634–00	SLIDE, SHIFT			1	1	1	
55	90501–10M77	SPRING, COMPRESSION			1	1	1	
56	93501–04011	BALL			2	2	2	
57	6H1–45668–00	SHAFT, FREE 1			1	1	1	

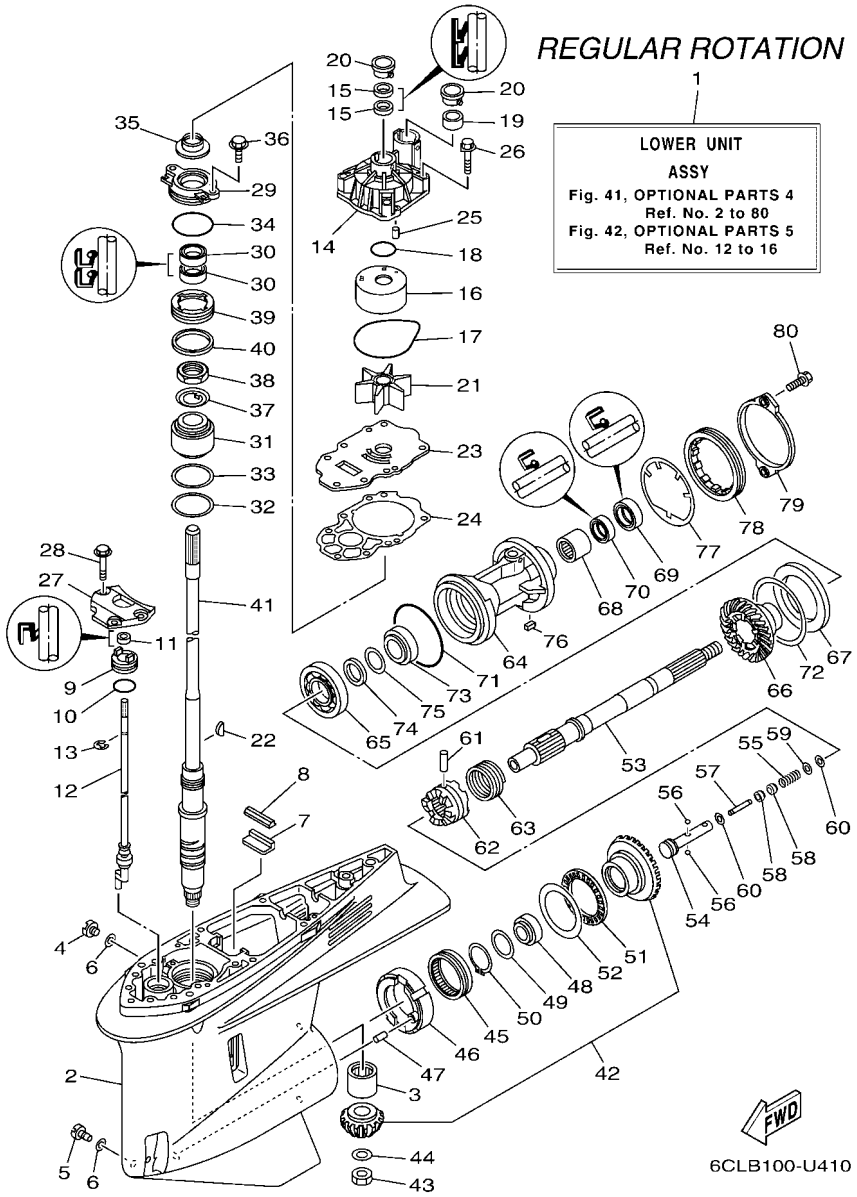

FIG. 41 OPTIONAL PARTS 4

REF. NO.	PART NO.	DESCRIPTION	XCA	UCA	NCA	NCA2	NCA2	REMARKS
58	61A–45635–00	PLUNGER, SHIFT			2	2	2	
59	90201–02M00	WASHER, PLATE			1	1	1	
60	90183–02M03	NUT, SPRING			2	2	2	
61	90250–08M07	PIN, STRAIGHT			1	1	1	
62	6CE–45631–00	CLUTCH, DOG			1	1	1	
63	6E5–45633–01	RING, CROSS PIN			1	1	1	
64	6CE–45332–00–CA	HOUSING, BEARING			1	1	1	
65	93306–209U0	BEARING			1	1	1	
66	6CE–45571–00	GEAR 2 (21T)			1	1	1	
67	6CB–45576–00	WASHER, THRUST 2			1	1	1	
68	93315–43061	BEARING			1	1	1	
69	93101–30030	OIL SEAL			1	1	1	
70	93101–30019	OIL SEAL			1	1	1	
71	93211–02001	O-RING			1	1	1	
72	6CB–45577–00	SHIM (T:0.10MM)			1	1	1	UR
	6CB–45577–10	SHIM (T:0.12MM)			1	1	1	UR
	6CB–45577–20	SHIM (T:0.15MM)			1	1	1	UR
	6CB–45577–30	SHIM (T:0.18MM)			1	1	1	UR
	6CB–45577–40	SHIM (T:0.30MM)			1	1	1	UR
	6CB–45577–50	SHIM (T:0.40MM)			1	1	1	UR
	6CB–45577–60	SHIM (T:0.50MM)			1	1	1	UR
73	93332–000A5	BEARING			1	1	1	
74	90201–32008	WASHER, PLATE			1	1	1	
75	676–45567–00	SHIM (T:0.7MM)			1	1	1	UR
	676–45567–10	SHIM (T:0.8MM)			1	1	1	UR
	676–45567–20	SHIM (T:0.9MM)			1	1	1	UR
	676–45567–30	SHIM (T:1.0MM)			1	1	1	UR

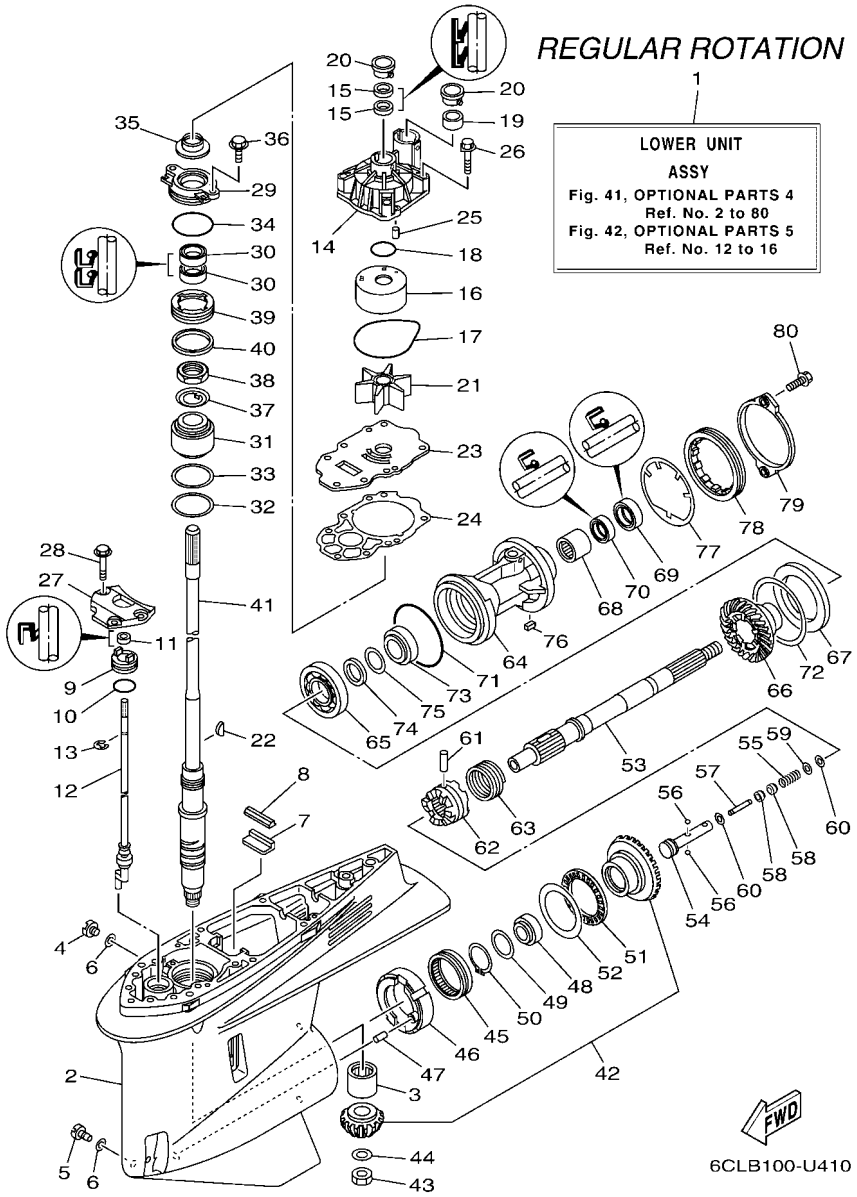

FIG. 41 OPTIONAL PARTS 4

REF. NO.	PART NO.	DESCRIPTION	XCA	UCA	NCA	NCA2	NCA2	REMARKS
75	676–45567–40	SHIM (T:1.1MM)			1	1	1	UR
	676–45567–50	SHIM (T:1.2MM)			1	1	1	UR
76	90282–05008	KEY, STRAIGHT			1	1	1	
77	6CB–45383–00	WASHER, CLAW			1	1	1	
78	6CB–45384–00	NUT			1	1	1	
79	6CE–45361–10	CAP, LOWER CASING			1	1	1	
80	90105–08M61	BOLT, FLANGE			2	2	2	

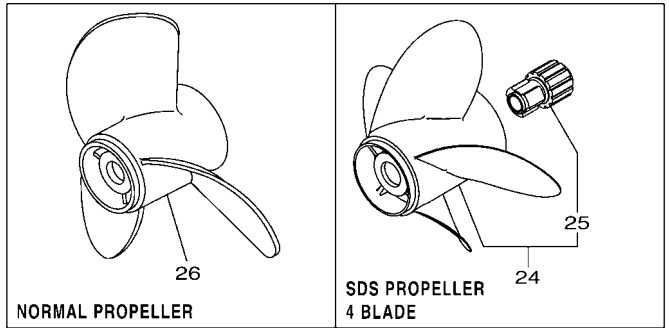

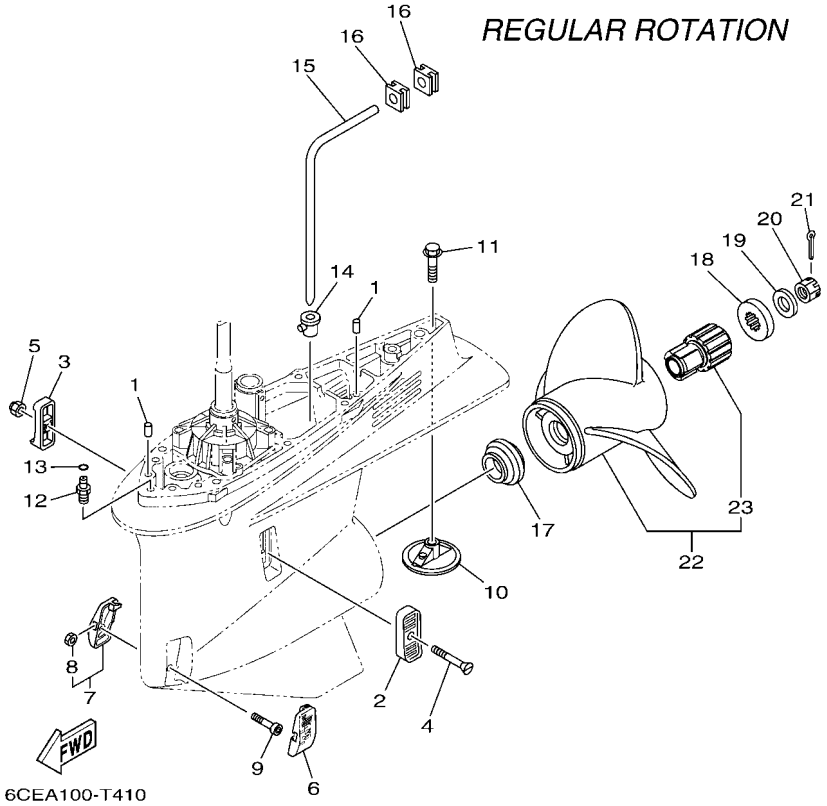

FIG. 42 OPTIONAL PARTS 5

REF. NO.	PART NO.	DESCRIPTION	XCA	UCA	NCA	NCA2	NCA2	REMARKS
1	93608–16M16	PIN, DOWEL			2	2	2	
2	6P2–45214–00	COVER, WATER INLET 1			1	1	1	
3	6P2–45215–00	COVER, WATER INLET 2			1	1	1	
4	90152–05M08	SCREW, COUNTERSUNK			1	1	1	
5	90185–05002	NUT, NYLON			1	1	1	
6	6CE–45224–00	COVER, WATER INLET 3			1	1	1	
7	6CE–45225–00	COVER, WATER INLET 4			1	1	1	
8	90185–05002	.NUT, NYLON			1	1	1	
9	90110–05039	BOLT, HEXAGON SOCKET HEAD			1	1	1	
10	6CE–45373–00	ANODE			1	1	1	
11	90105–10M00	BOLT, FLANGE			1	1	1	
12	63P–45378–00	NIPPLE, HOSE			1	1	1	
13	93210–07003	O-RING			1	1	1	
14	6D0–44367–00	DAMPER, WATER SEAL 3			1	1	1	
15	6D0–44362–01	TUBE, WATER 2			1	1	1	
16	6D0–44366–00	DAMPER, WATER SEAL 2			2	2	2	
17	69J–45987–00	SPACER 1			1	1	1	
18	688–45997–01	SPACER 2			1	1	1	
19	92990–18200	WASHER			1	1	1	
20	90171–18M04	NUT, CASTLE			1	1	1	
21	91490–40030	PIN. COTTER			1	1	1	
22	6CE–45930–20	PROPELLER (3X15-3/4"X13"-T)			1	1	1	UR SDS 3 BLADE
	6CE–45976–20	PROPELLER (3X15-3/4"X15"-T)			1	1	1	UR SDS 3 BLADE
	6CE–45978–20	PROPELLER (3X15-1/2"X17"-T)			1	1	1	UR SDS 3 BLADE
	6CE–45970–20	PROPELLER (3X15-1/4"X19"-T)			1	1	1	UR SDS 3 BLADE
	6CE–45972–20	PROPELLER (3X15"X21"-T)			1	1	1	UR SDS 3 BLADE
	6CE–45974–20	PROPELLER (3X14-3/4"X23"-T)			1	1	1	UR SDS 3 BLADE

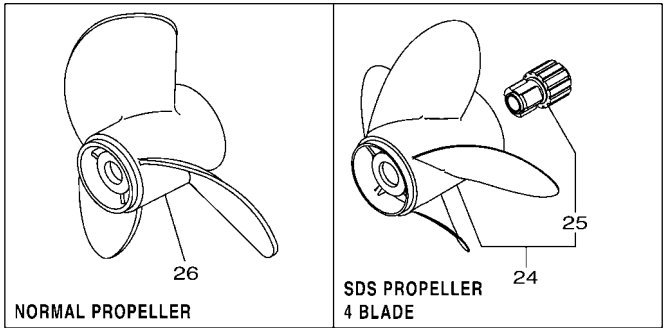

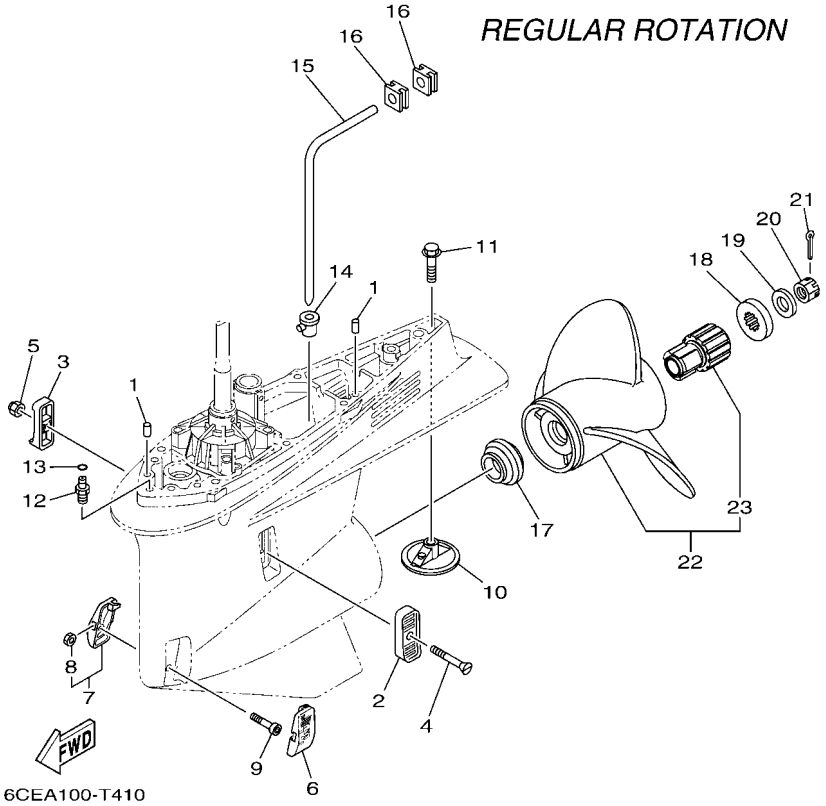

FIG. 42 OPTIONAL PARTS 5

REF. NO.	PART NO.	DESCRIPTION	XCA	UCA	NCA	NCA2	NCA2	REMARKS
23	6CE–45C81–10	.DAMPER RUBBER, PROPELLER 1			1	1	1	
24	6CE–45B70–20	PROPELLER (4X15"X21"-T)			1	1	1	UR SDS 4 BLADE
	6CE–45B72–20	PROPELLER (4X15"X22"-T)			1	1	1	UR SDS 4 BLADE
	6CE–45B74–20	PROPELLER (4X15"X23"-T)			1	1	1	UR SDS 4 BLADE
25	6CE–45C81–10	.DAMPER RUBBER, PROPELLER 1			1	1	1	
26	6D0–45970–10	PROPELLER (3X15-1/4"X19"-T)			1	1	1	AP NORMAL PROP.

FIG. 43 OPTIONAL PARTS 6

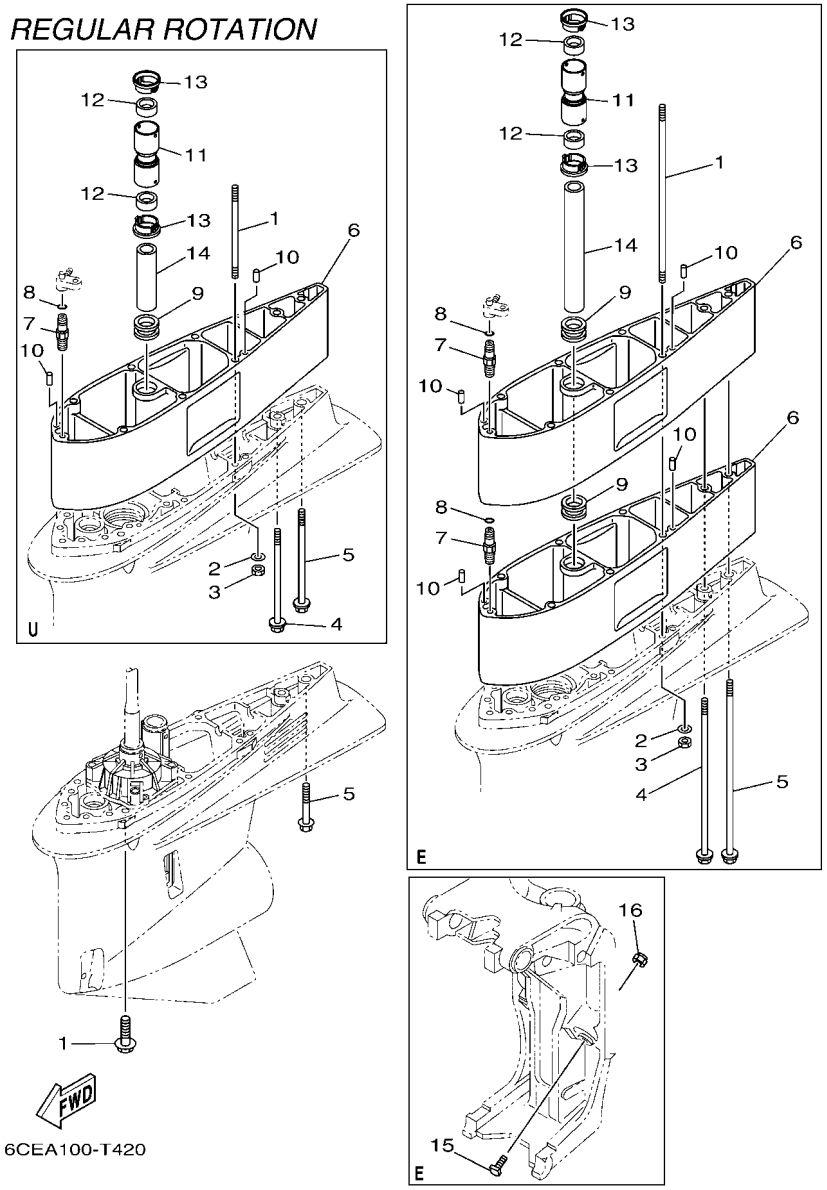

REF. NO.	PART NO.	DESCRIPTION	XCA	UCA	NCA	NCA2	NCA2	REMARKS
1	90119–10038	BOLT, WITH WASHER			7	7	7	X(25.3")
	90116–10041	BOLT, STUD			6	6	6	U(30.3")
	90116–10066	BOLT, STUD			6	6	6	E(35.3")
2	90201–10048	WASHER, PLATE			6	6	6	U(30.3"),E(35.3")
3	90170–10009	NUT			6	6	6	U(30.3"),E(35.3")
4	90119–10009	BOLT, WITH WASHER			1	1	1	U(30.3")
	90119–10060	BOLT, WITH WASHER			1	1	1	E(35.3")
5	97E75–10570	BOLT, HEXAGON W/W DEEP RECESS			1	1	1	X(25.3")
	90119–10008	BOLT, WITH WASHER			1	1	1	U(30.3")
	90119–10061	BOLT, WITH WASHER			1	1	1	E(35.3")
6	6CE–45211–10–8D	EXTENSION			1	1		GRAY U(30.3")
	6CE–45211–10–CE	EXTENSION					1	WHITE U(30.3")
	6CE–45211–10–8D	EXTENSION			2	2		GRAY E(35.3")
	6CE–45211–10–CE	EXTENSION					2	WHITE E(35.3")
7	63P–45378–00	NIPPLE, HOSE			1	1	1	U(30.3")
	63P–45378–00	NIPPLE, HOSE			2	2	2	E(35.3")
8	93210–07003	O-RING			1	1	1	U(30.3")
	93210–07003	O-RING			2	2	2	E(35.3")
9	6AW–44366–00	DAMPER, WATER SEAL 2			1	1	1	U(30.3")
	6AW–44366–00	DAMPER, WATER SEAL 2			2	2	2	E(35.3")
10	93608–16M16	PIN, DOWEL			2	2	2	U(30.3")
	93608–16M16	PIN, DOWEL			4	4	4	E(35.3")
11	6CE–44362–00	TUBE, WATER 2			1	1	1	U(30.3"),E(35.3")
12	6AW–44365–00	DAMPER, WATER SEAL 1			2	2	2	U(30.3"),E(35.3")
13	6AW–44312–00	COVER, WATER PUMP HOUSING			2	2	2	U(30.3"),E(35.3")
14	6AW–44363–00	TUBE, WATER 3			1	1	1	U(30.3")
	6CE–44363–00	TUBE, WATER 3			1	1	1	E(35.3")

FIG. 43 OPTIONAL PARTS 6

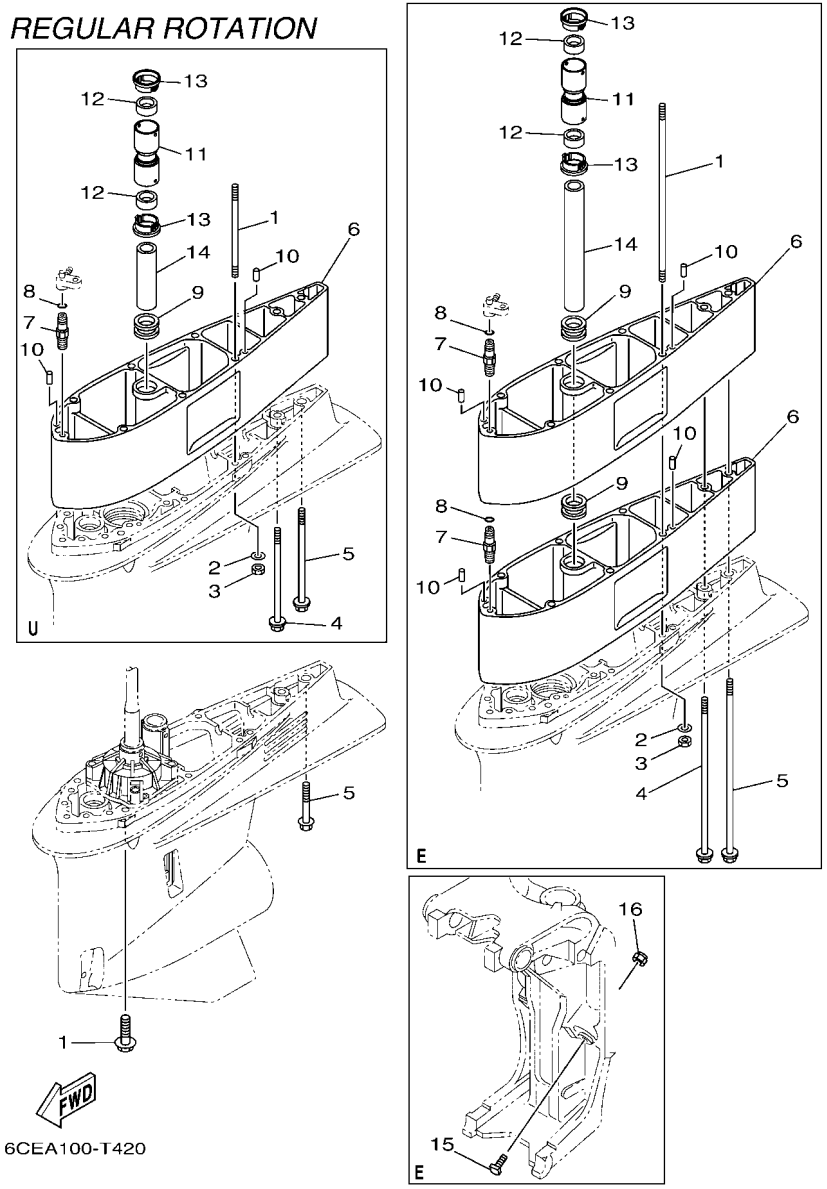

REF. NO.	PART NO.	DESCRIPTION	XCA	UCA	NCA	NCA2	NCA2	REMARKS
15	6AW–43376–00	BOLT, THRUST RECEIVER			2	2	2	E(35.3")
16	95780–10300	NUT, FLANGE			2	2	2	E(35.3")

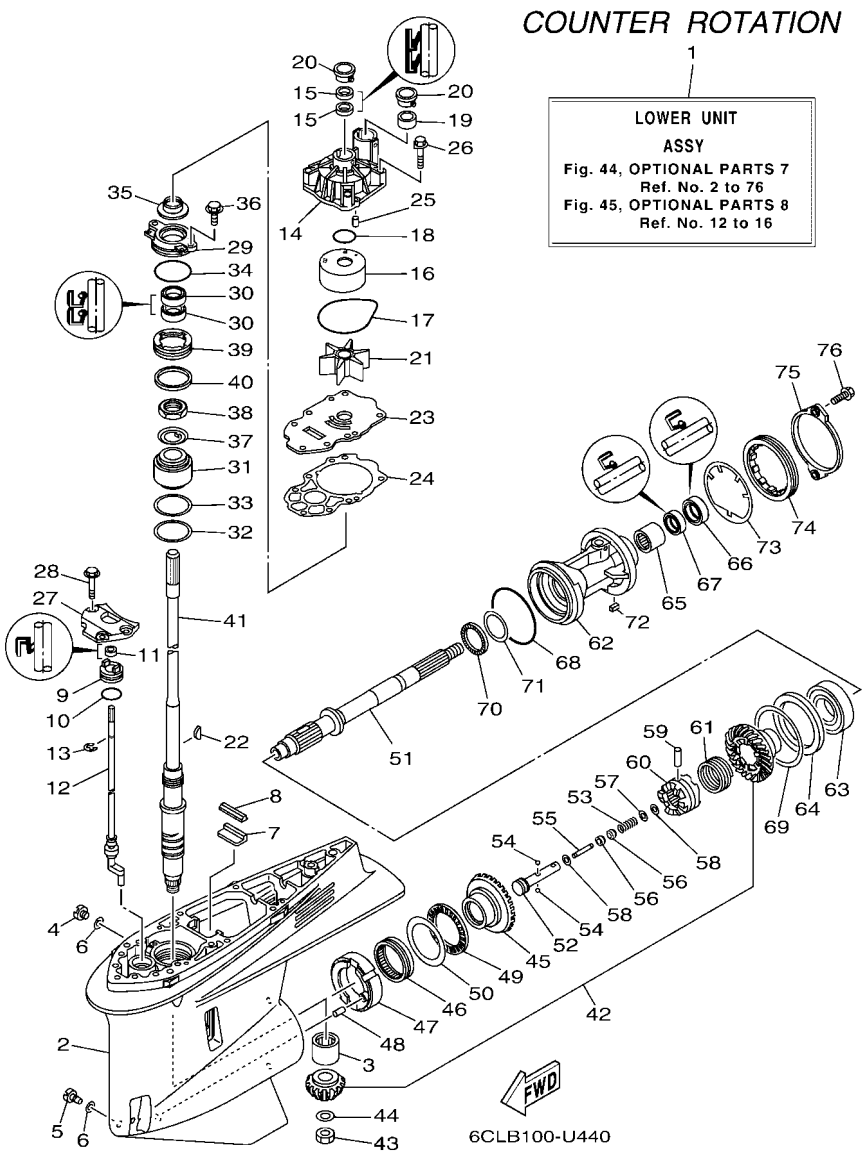

FIG. 44 OPTIONAL PARTS 7

REF. NO.	PART NO.	DESCRIPTION	XCA	UCA	NCA	NCA2	NCA2	REMARKS
1	6CF–45300–05–CE	LOWER UNIT ASSY					1	X(25.3"),LH
	6CF–45300–15–CE	LOWER UNIT ASSY					1	U(30.3"),LH
	6CF–45300–23–CE	LOWER UNIT ASSY					1	E(35.3"),LH
2	6CE–45301–00–CE	CASING, LOWER					1	
3	93311–83280	BEARING					1	
4	90340–08002	PLUG, STRAIGHT SCREW					1	
5	688–45341–10	PLUG, DRAIN					1	
6	90430–08003	GASKET					2	
7	663–45376–00	GUIDE, SEAL DAMPER					1	
8	6CE–45375–00	DAMPER, SEAL					1	
9	6CE–45321–10	PLATE					1	X(25.3")
	6CE–45321–20	PLATE					1	U(30.3"),E(35.3")
10	93210–33M49	O-RING					1	
11	93106–09014	OIL SEAL					1	X(25.3")
	93106–10001	OIL SEAL					1	U(30.3"),E(35.3")
12	6CF–44150–00	SHIFT CAM ASSY					1	X(25.3"),LH
	6CF–44150–10	SHIFT CAM ASSY					1	U(30.3"),LH
	6CF–44150–20	SHIFT CAM ASSY					1	E(35.3"),LH
13	99001–08600	CIRCLIP					1	X(25.3")
	99001–09600	CIRCLIP					1	U(30.3"),E(35.3")
14	6CE–44311–01	HOUSING, WATER PUMP					1	
15	93104–22M07	OIL SEAL					2	
16	6AW–44322–00	INSERT, CARTRIDGE					1	
17	93210–94003	O-RING					1	
18	93210–37160	O-RING					1	
19	6AW–44365–00	DAMPER, WATER SEAL 1					1	
20	6AW–44312–00	COVER, WATER PUMP HOUSING					2	

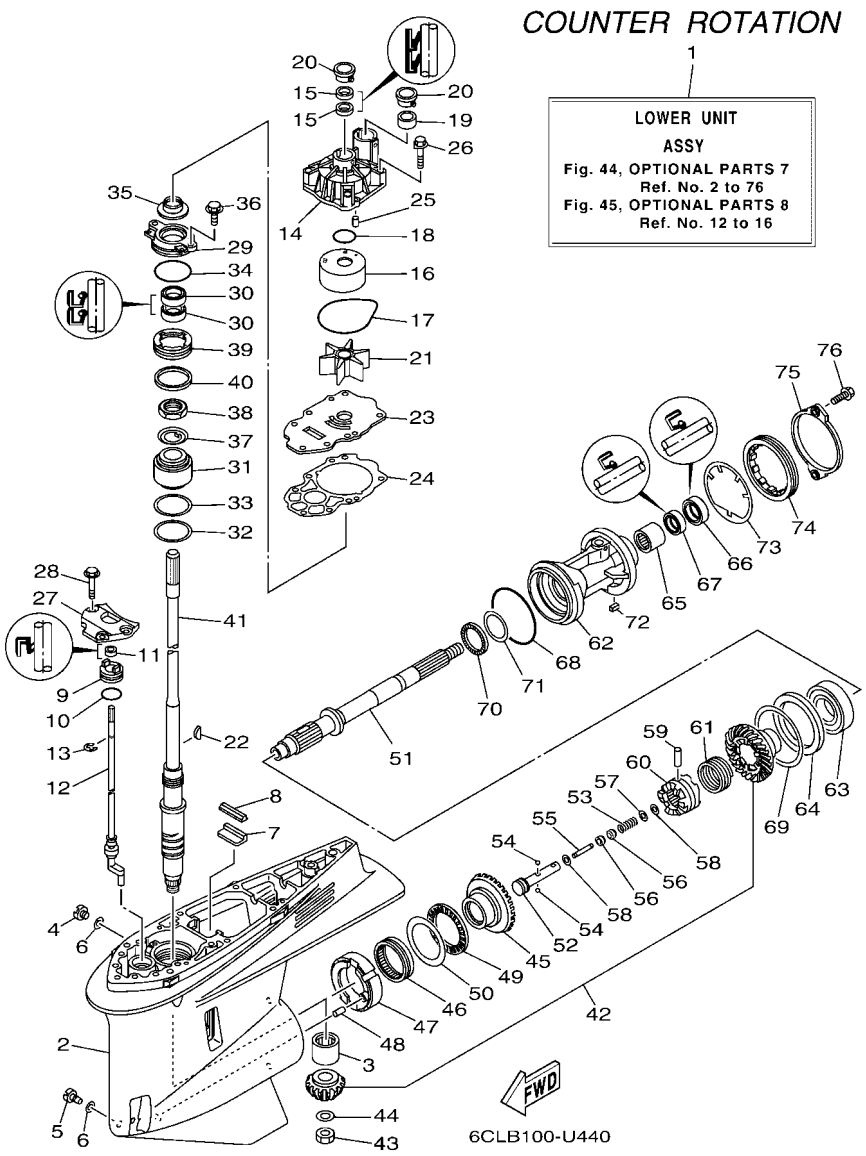

FIG. 44 OPTIONAL PARTS 7

REF. NO.	PART NO.	DESCRIPTION	XCA	UCA	NCA	NCA2	NCA2	REMARKS
21	6CE–44352–00	IMPELLER					1	
22	90280–04002	KEY, WOODRUFF					1	
23	6CE–44323–01	OUTER PLATE, CARTRIDGE					1	
24	6CE–44315–00	GASKET, WATER PUMP					1	
25	93606–12019	PIN, DOWEL					2	
26	90119–08191	BOLT, WITH WASHER					4	
27	6CB–44312–00	COVER, WATER PUMP HOUSING					1	
28	90119–08180	BOLT, WITH WASHER					3	
29	6CE–45335–00–9S	HOUSING, OIL SEAL					1	
30	93101–28019	OIL SEAL					2	
31	93399–99966	BEARING					1	
32	90201–62008	WASHER, PLATE					1	
33	6CE–45587–00	SHIM (T:0.10MM)					1	UR
	6CE–45587–10	SHIM (T:0.12MM)					1	UR
	6CE–45587–20	SHIM (T:0.15MM)					1	UR
	6CE–45587–30	SHIM (T:0.18MM)					1	UR
	6CE–45587–40	SHIM (T:0.30MM)					1	UR
	6CE–45587–50	SHIM (T:0.40MM)					1	UR
	6CE–45587–60	SHIM (T:0.50MM)					1	UR
34	93210–64488	O-RING					1	
35	6AW–45344–00	COVER, OIL SEAL					1	
36	97E95–08520	BOLT, HEXAGON W/W DEEP RECESS					2	
37	90214–30003	WASHER, CLAW					1	
38	90170–30M18	NUT					1	
39	6CE–45244–00	NUT					1	
40	6CE–45539–00	SPACER 2					1	
41	6CE–45501–00	DRIVE SHAFT COMP.					1	X(25.3")

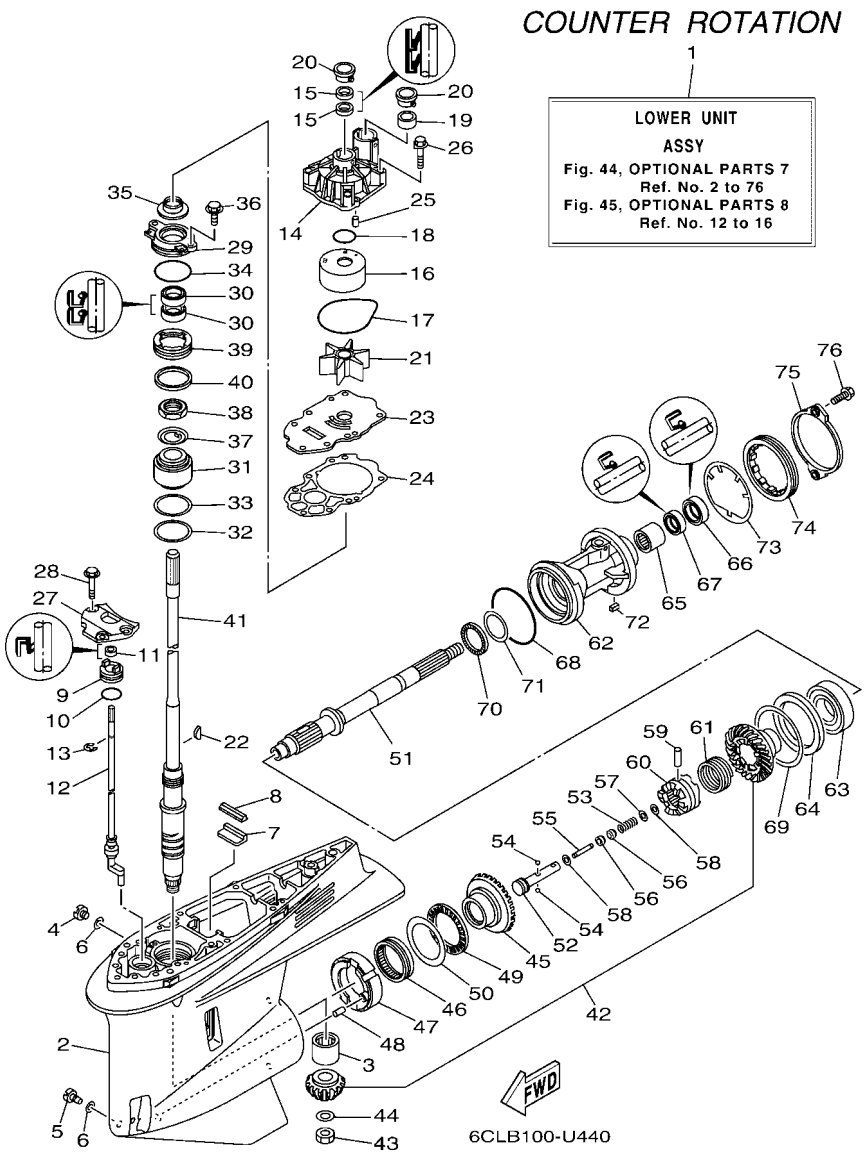

FIG. 44 OPTIONAL PARTS 7

REF. NO.	PART NO.	DESCRIPTION	XCA	UCA	NCA	NCA2	NCA2	REMARKS
41	6CE–45501–10	DRIVE SHAFT COMP.					1	U(30.3")
	6CE–45501–20	DRIVE SHAFT COMP.					1	E(35.3")
42	6CF–45550–00	GEAR SET					1	
43	90170–16M19	NUT					1	
44	90201–16M00	WASHER, PLATE					1	
45	6CF–45560–01	GEAR 1 (21T)					1	
46	93311–85894	BEARING					1	
47	6CB–45824–00	ADAPTER					1	
48	93608–16M16	PIN, DOWEL					1	
49	93340–67011	BEARING					1	
50	6CB–45567–00	SHIM (T:2.00MM)					1	UR
	6CB–45567–10	SHIM (T:2.03MM)					1	UR
	6CB–45567–20	SHIM (T:2.06MM)					1	UR
	6CB–45567–30	SHIM (T:2.09MM)					1	UR
	6CB–45567–40	SHIM (T:2.12MM)					1	UR
	6CB–45567–50	SHIM (T:2.15MM)					1	UR
51	6CF–45611–01	SHAFT, PROPELLER					1	
52	6CB–45634–00	SLIDE, SHIFT					1	
53	90501–10M77	SPRING, COMPRESSION					1	
54	93501–04011	BALL					2	
55	6H1–45668–00	SHAFT, FREE 1					1	
56	61A–45635–00	PLUNGER, SHIFT					2	
57	90201–02M00	WASHER, PLATE					1	
58	90183–02M03	NUT, SPRING					2	
59	90250–08M07	PIN, STRAIGHT					1	
60	6CE–45631–00	CLUTCH, DOG					1	
61	6E5–45633–01	RING, CROSS PIN					1	

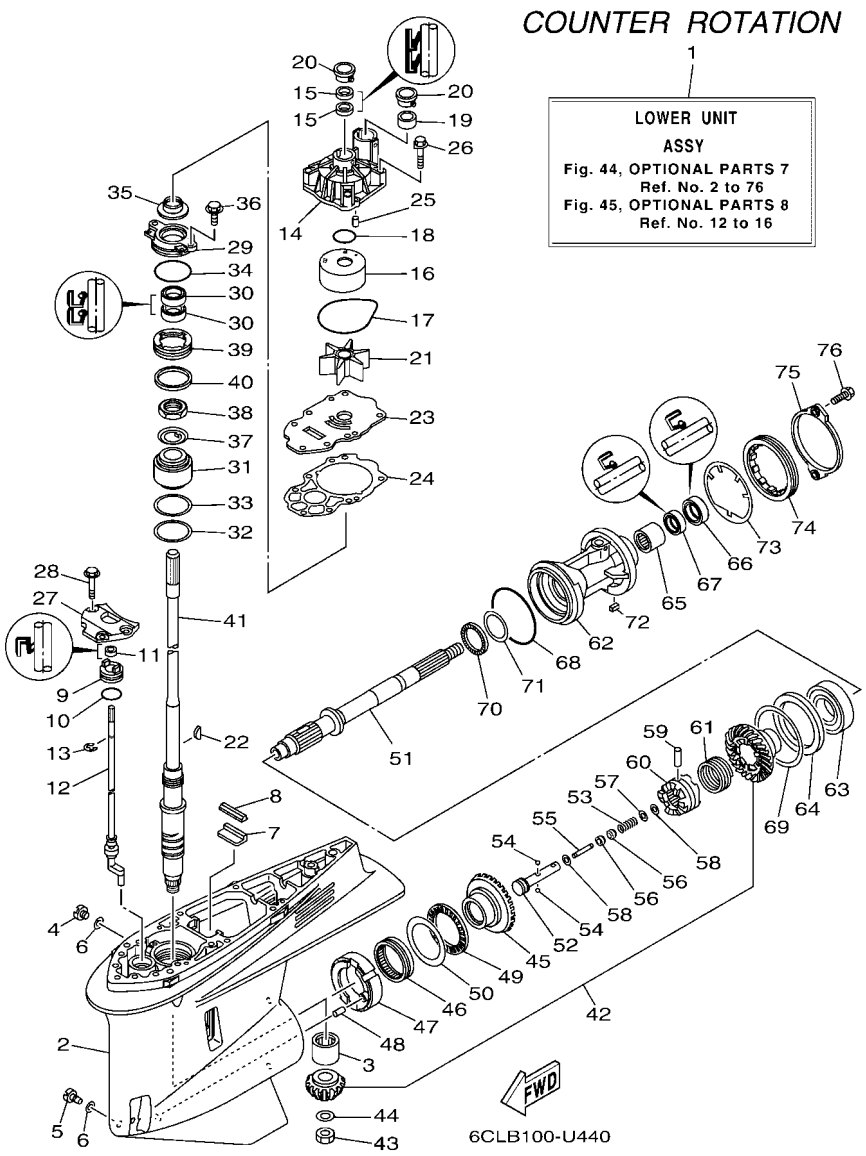

FIG. 44 OPTIONAL PARTS 7

REF. NO.	PART NO.	DESCRIPTION	XCA	UCA	NCA	NCA2	NCA2	REMARKS
62	6CF–45332–01–CA	HOUSING, BEARING					1	
63	93332–00048	BEARING					1	
64	6CF–45576–00	WASHER, THRUST 2					1	
65	93315–43061	BEARING					1	
66	93101–30030	OIL SEAL					1	
67	93101–30019	OIL SEAL					1	
68	93211–02001	O-RING					1	
69	6CB–45577–00	SHIM (T:0.10MM)					1	UR
	6CB–45577–10	SHIM (T:0.12MM)					1	UR
	6CB–45577–20	SHIM (T:0.15MM)					1	UR
	6CB–45577–30	SHIM (T:0.18MM)					1	UR
	6CB–45577–40	SHIM (T:0.30MM)					1	UR
	6CB–45577–50	SHIM (T:0.40MM)					1	UR
	6CB–45577–60	SHIM (T:0.50MM)					1	UR
70	93341–440U5	BEARING					1	
71	6K1–45578–01	SHIM (T:0.10MM)					1	UR
	6K1–45578–10	SHIM (T:0.12MM)					1	UR
	6K1–45578–20	SHIM (T:0.15MM)					1	UR
	6K1–45578–30	SHIM (T:0.18MM)					1	UR
	6K1–45578–40	SHIM (T:0.30MM)					1	UR
	6K1–45578–50	SHIM (T:0.40MM)					1	UR
	6K1–45578–60	SHIM (T:0.50MM)					1	UR
72	90282–05008	KEY, STRAIGHT					1	
73	6CB–45383–00	WASHER, CLAW					1	
74	6CB–45384–00	NUT					1	
75	6CE–45361–10	CAP, LOWER CASING					1	
76	90105–08M61	BOLT, FLANGE					2	

FIG. 45 OPTIONAL PARTS 8

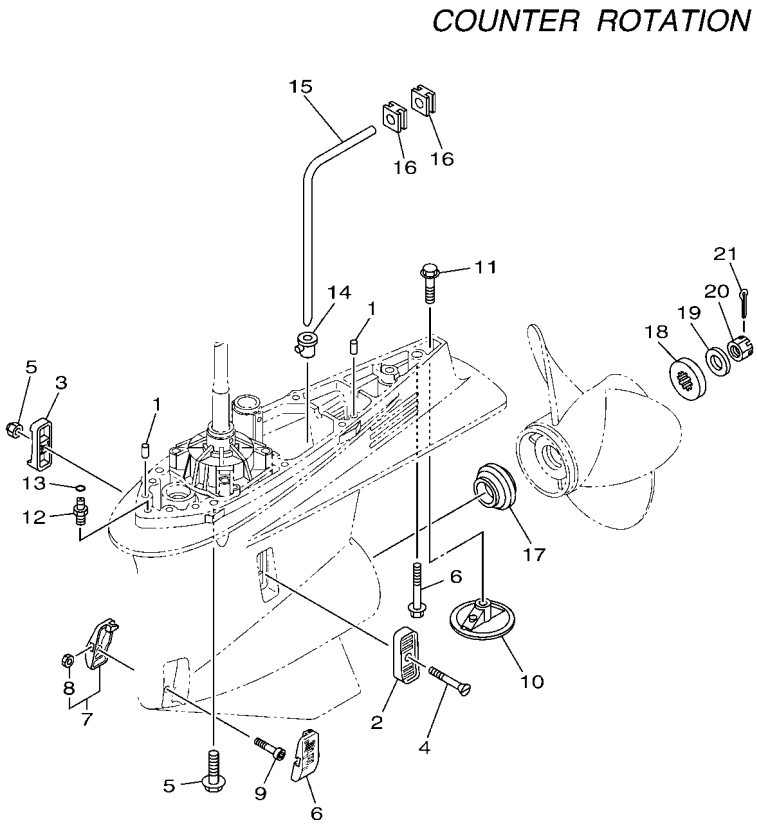

6CLB100-U450

REF. NO.	PART NO.	DESCRIPTION	XCA	UCA	NCA	NCA2	NCA2	REMARKS
1	93608–16M16	PIN, DOWEL					2	
2	6P2–45214–00	COVER, WATER INLET 1					1	
3	6P2–45215–00	COVER, WATER INLET 2					1	
4	90152–05M08	SCREW, COUNTERSUNK					1	
5	90185–05002	NUT, NYLON					1	
6	6CE–45224–00	COVER, WATER INLET 3					1	
7	6CE–45225–00	COVER, WATER INLET 4					1	
8	90185–05002	.NUT, NYLON					1	
9	90110–05039	BOLT, HEXAGON SOCKET HEAD					1	
10	6CE–45373–00	ANODE					1	
11	90105–10M00	BOLT, FLANGE					1	
12	63P–45378–00	NIPPLE, HOSE					1	
13	93210–07003	O-RING					1	
14	6D0–44367–00	DAMPER, WATER SEAL 3					1	
15	6D0–44362–01	TUBE, WATER 2					1	
16	6D0–44366–00	DAMPER, WATER SEAL 2					2	
17	69J–45987–00	SPACER 1					1	
18	688–45997–01	SPACER 2					1	
19	92990–18200	WASHER					1	
20	90171–18M04	NUT, CASTLE					1	
21	91490–40030	PIN. COTTER					1	

FIG. 46 OPTIONAL PARTS 9

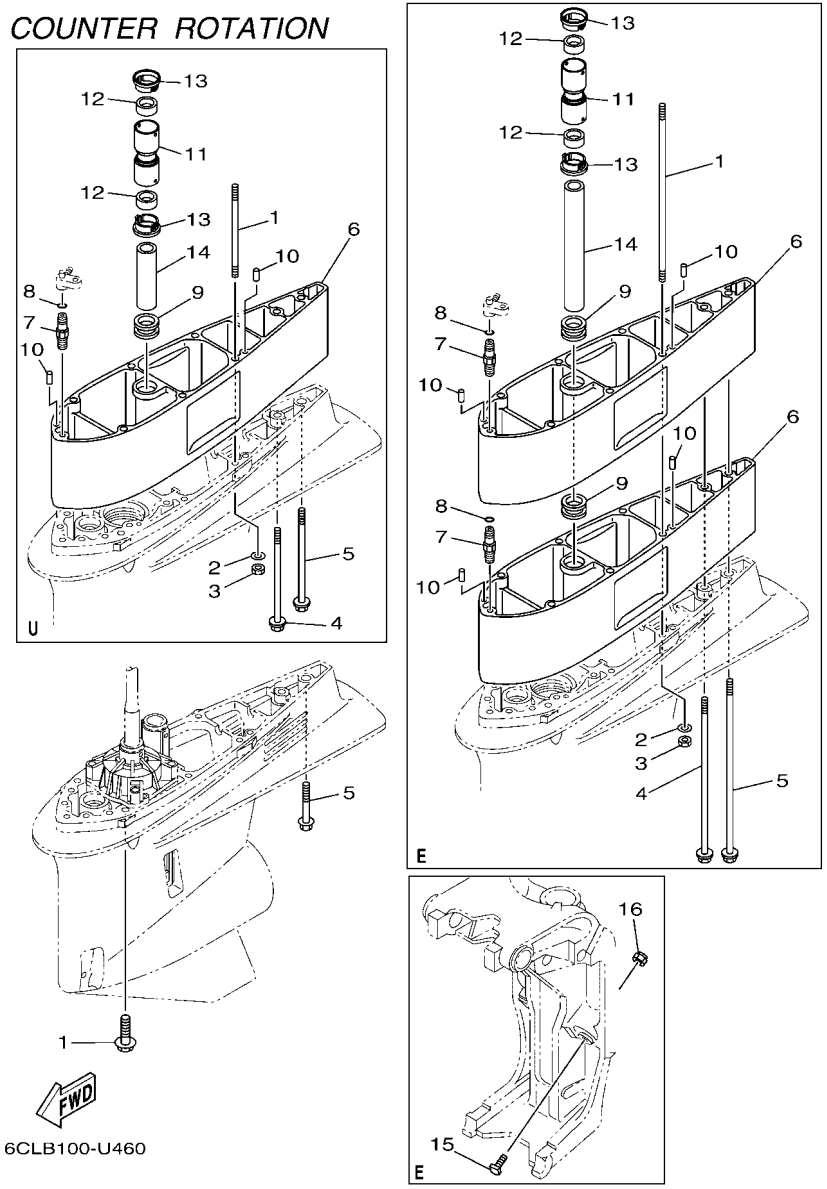

REF. NO.	PART NO.	DESCRIPTION	XCA	UCA	NCA	NCA2	NCA2	REMARKS
1	90119–10038	BOLT, WITH WASHER					7	X(25.3")
	90116–10041	BOLT, STUD					6	U(30.3")
	90116–10066	BOLT, STUD					6	E(35.3")
2	90201–10048	WASHER, PLATE					6	U(30.3"),E(35.3")
3	90170–10009	NUT					6	U(30.3"),E(35.3")
4	90119–10009	BOLT, WITH WASHER					1	U(30.3")
	90119–10060	BOLT, WITH WASHER					1	E(35.3")
5	97E75–10570	BOLT, HEXAGON W/W DEEP RECESS					1	X(25.3")
	90119–10008	BOLT, WITH WASHER					1	U(30.3")
	90119–10061	BOLT, WITH WASHER					1	E(35.3")
6	6CE–45211–10–CE	EXTENSION					1	U(30.3")
	6CE–45211–10–CE	EXTENSION					2	E(35.3")
7	63P–45378–00	NIPPLE, HOSE					1	U(30.3")
	63P–45378–00	NIPPLE, HOSE					2	E(35.3")
8	93210–07003	O-RING					1	U(30.3")
	93210–07003	O-RING					2	E(35.3")
9	6AW–44366–00	DAMPER, WATER SEAL 2					1	U(30.3")
	6AW–44366–00	DAMPER, WATER SEAL 2					2	E(35.3")
10	93608–16M16	PIN, DOWEL					2	U(30.3")
	93608–16M16	PIN, DOWEL					4	E(35.3")
11	6CE–44362–00	TUBE, WATER 2					1	U(30.3"),E(35.3")
12	6AW–44365–00	DAMPER, WATER SEAL 1					2	U(30.3"),E(35.3")
13	6AW–44312–00	COVER, WATER PUMP HOUSING					2	U(30.3"),E(35.3")
14	6AW–44363–00	TUBE, WATER 3					1	U(30.3")
	6CE–44363–00	TUBE, WATER 3					1	E(35.3")
15	6AW–43376–00	BOLT, THRUST RECEIVER					2	E(35.3")
16	95780–10300	NUT, FLANGE					2	E(35.3")

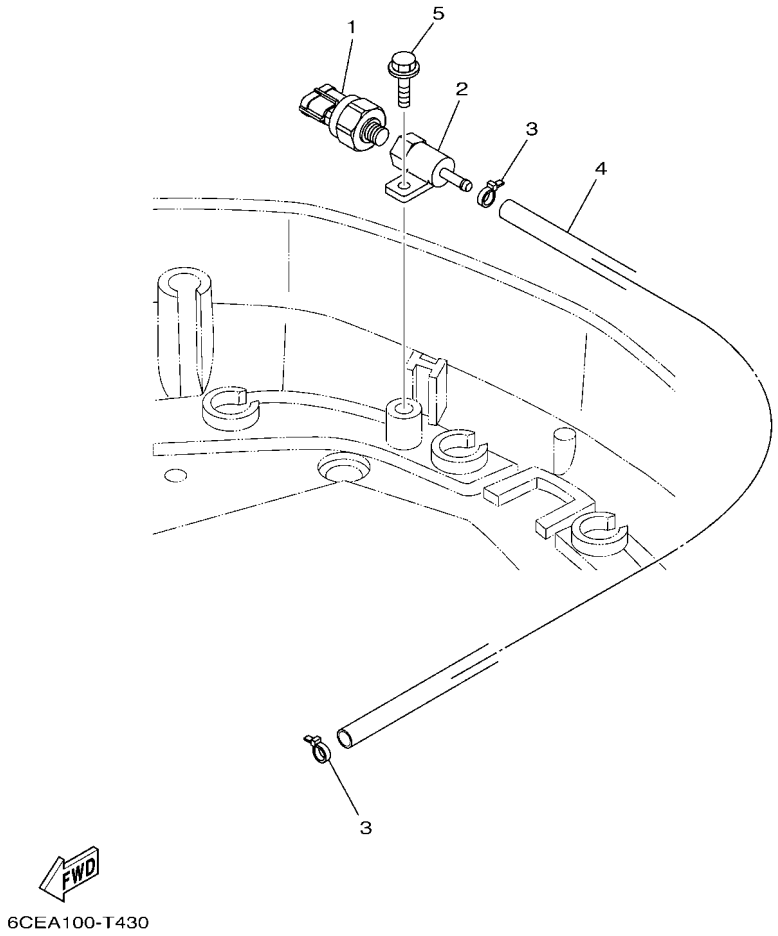

FIG. 47 OPTIONAL PARTS 10

REF. NO.	PART NO.	DESCRIPTION	XCA	UCA	NCA	NCA2	NCA2	REMARKS
1	6AW–8366B–01	SENSOR, WATER PRESSURE			1	1	1	FOR LAN SPEED
2	60V–8366D–00	ADAPTOR, INPUT			1	1	1	FOR LAN SPEED
3	90465–11M10	CLAMP			2	2	2	FOR LAN SPEED
4	90445–07017	HOSE (L: 550MM)			1	1	1	FOR LAN SPEED
5	97E95–06516	BOLT, HEXAGON W/W DEEP RECESS			1	1	1	FOR LAN SPEED

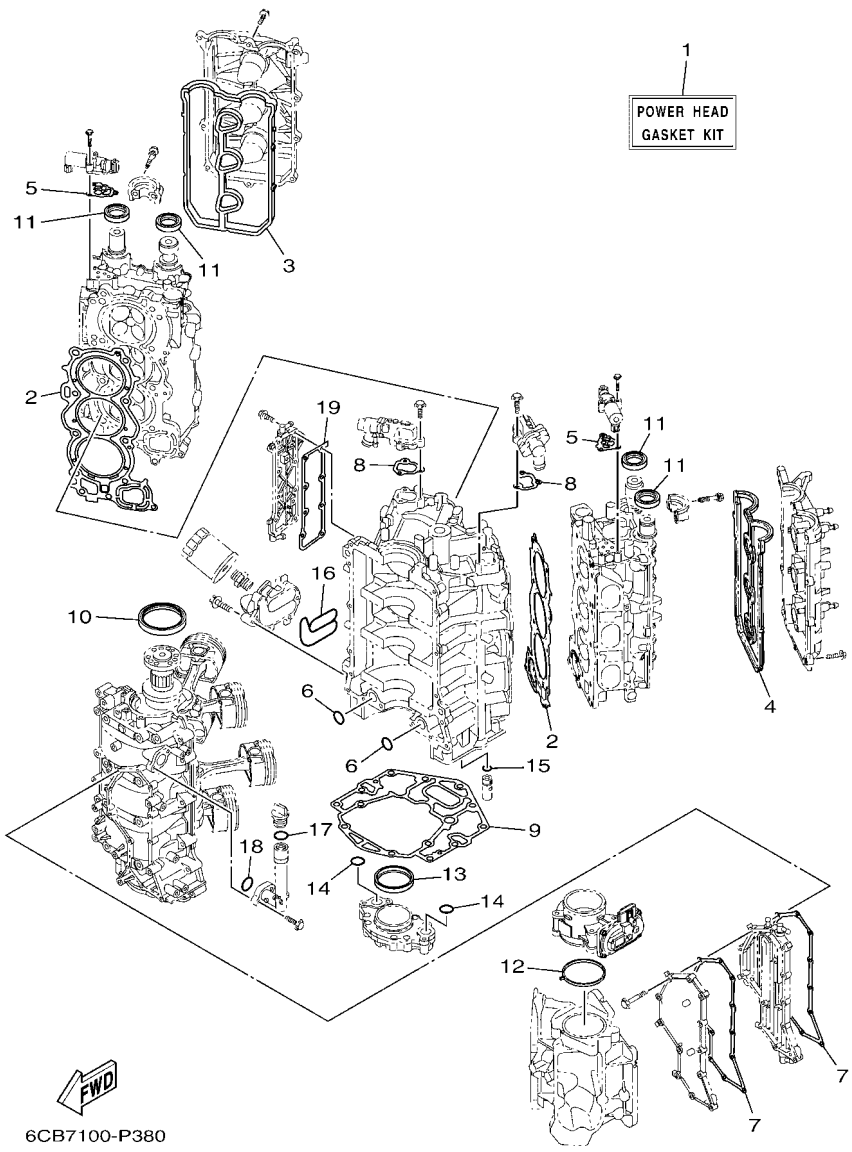

FIG. 48 REPAIR KIT 1

REF. NO.	PART NO.	DESCRIPTION	XCA	UCA	NCA	NCA2	NCA2	REMARKS
1	6CB–W0001–03	POWER HEAD GASKET KIT	1	1	1	1	1	
2	6CB–11181–00	.GASKET, CYLINDER HEAD 1	2	2	2	2	2	
3	6CB–11193–00	.GASKET, HEAD COVER 1	1	1	1	1	1	
4	6CB–11194–00	.GASKET, HEAD COVER 2	1	1	1	1	1	
5	6CB–1242F–00	.GASKET, FILTER	2	2	2	2	2	
6	93210–26658	.O-RING	2	2	2	2	2	
7	6CB–15451–01	.GASKET, CRANKCASE COVER 1	2	2	2	2	2	
8	6CB–12427–11	.GASKET, HOUSING COVER 1	2	2	2	2	2	
9	6CB–11351–00	.GASKET, CYLINDER	1	1	1	1	1	
10	93102–85008	.OIL SEAL	1	1	1	1	1	
11	93102–38008	.OIL SEAL	4	4	4	4	4	
12	6CB–13556–00	.GASKET, MANIFOLD	1	1	1	1	1	
13	6CB–11355–00	.SEAL, CYLINDER 1	1	1	1	1	1	
14	93210–26658	.O-RING	2	2	2	2	2	
15	6CB–13473–00	.O-RING	1	1	1	1	1	
16	6CB–13477–00	.GASKET	1	1	1	1	1	
17	93210–24M79	.O-RING	1	1	1	1	1	
18	93210–27370	.O-RING	1	1	1	1	1	
19	6CB–1131B–00	.GASKET, COVER	1	1	1	1	1	

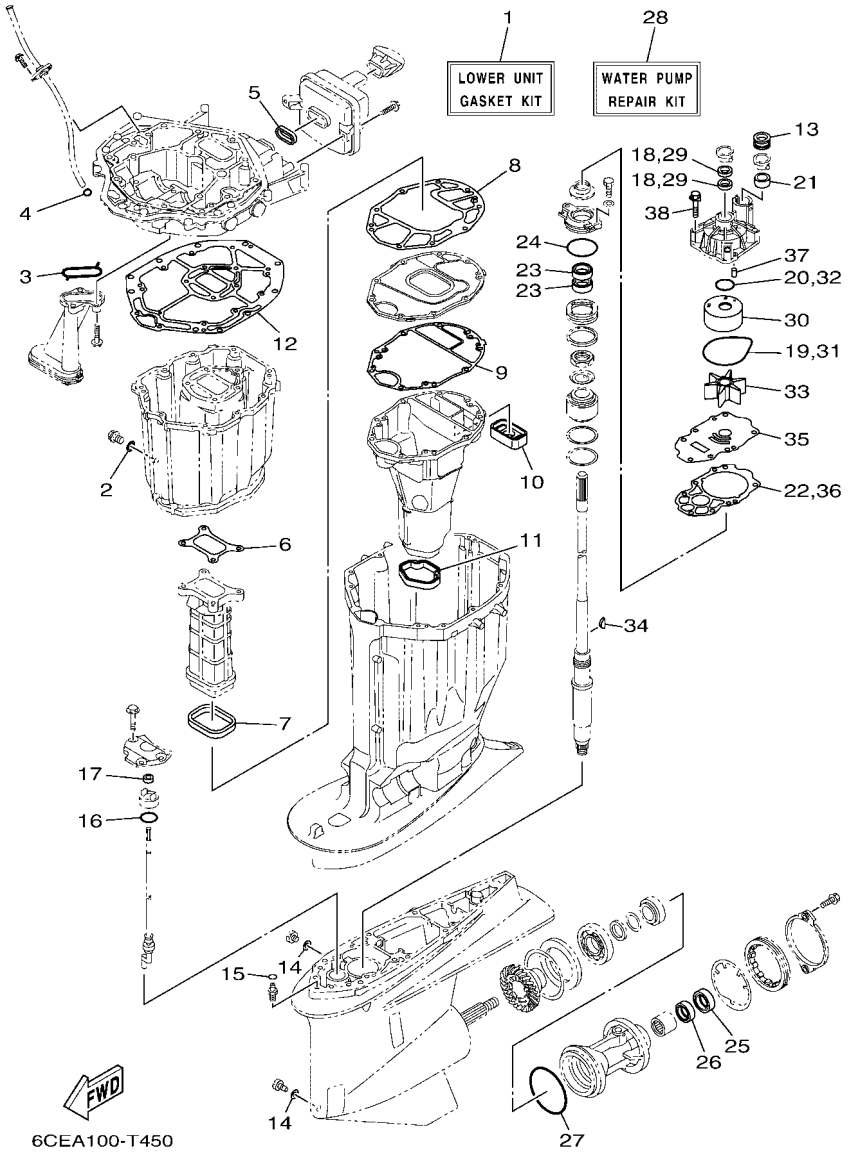

FIG. 49 REPAIR KIT 2

REF. NO.	PART NO.	DESCRIPTION	XCA	UCA	NCA	NCA2	NCA2	REMARKS
1	6CE–W0001–23	LOWER UNIT GASKET KIT	1	1	1	1	1	
2	90430–14M09	.GASKET	1	1	1	1	1	
3	6AW–13415–00	.SEAL, OIL STRAINER	1	1	1	1	1	
4	93210–19MJ3	.O-RING	1	1	1	1	1	
5	6CB–14755–00	.GASKET, SILENCER	1	1	1	1	1	
6	6CB–41134–00	.GASKET, EXHAUST MANIFOLD	1	1	1	1	1	
7	6CB–41138–00	.SEAL, EXT. 1	1	1	1	1	1	
8	6CB–41135–00	.GASKET, EXHAUST MANIFOLD	1	1	1	1	1	
9	6CE–41136–00	.GASKET, EXHAUST MANIFOLD 4	1	1	1	1	1	
10	6CE–45127–00	.SEAL	1	1	1	1	1	
11	6CE–45123–00	.GASKET, MUFFLER	1	1	1	1	1	
12	6CB–45113–01	.GASKET, UPPER CASING	1	1	1	1	1	
13	6AW–44366–00	.DAMPER, WATER SEAL 2	1	1	1	1	1	
14	90430–08003	.GASKET	2	2	2	2	2	
15	93210–07003	.O-RING	1	1	1	1	1	
16	93210–33M49	.O-RING	1	1	1	1	1	
17	93106–09014	.OIL SEAL	1	1	1	1	1	X(25.3")
	93106–10001	.OIL SEAL	1	1	1	1	1	U(30.3"),E(35.3")
18	93104–22M07	.OIL SEAL	2	2	2	2	2	
19	93210–94003	.O-RING	1	1	1	1	1	
20	93210–37160	.O-RING	1	1	1	1	1	
21	6AW–44365–00	.DAMPER, WATER SEAL 1	1	1	1	1	1	
22	6CE–44315–00	.GASKET, WATER PUMP	1	1	1	1	1	
23	93101–28019	.OIL SEAL	2	2	2	2	2	
24	93210–64488	.O-RING	1	1	1	1	1	
25	93101–30030	.OIL SEAL	1	1	1	1	1	
26	93101–30019	.OIL SEAL	1	1	1	1	1	

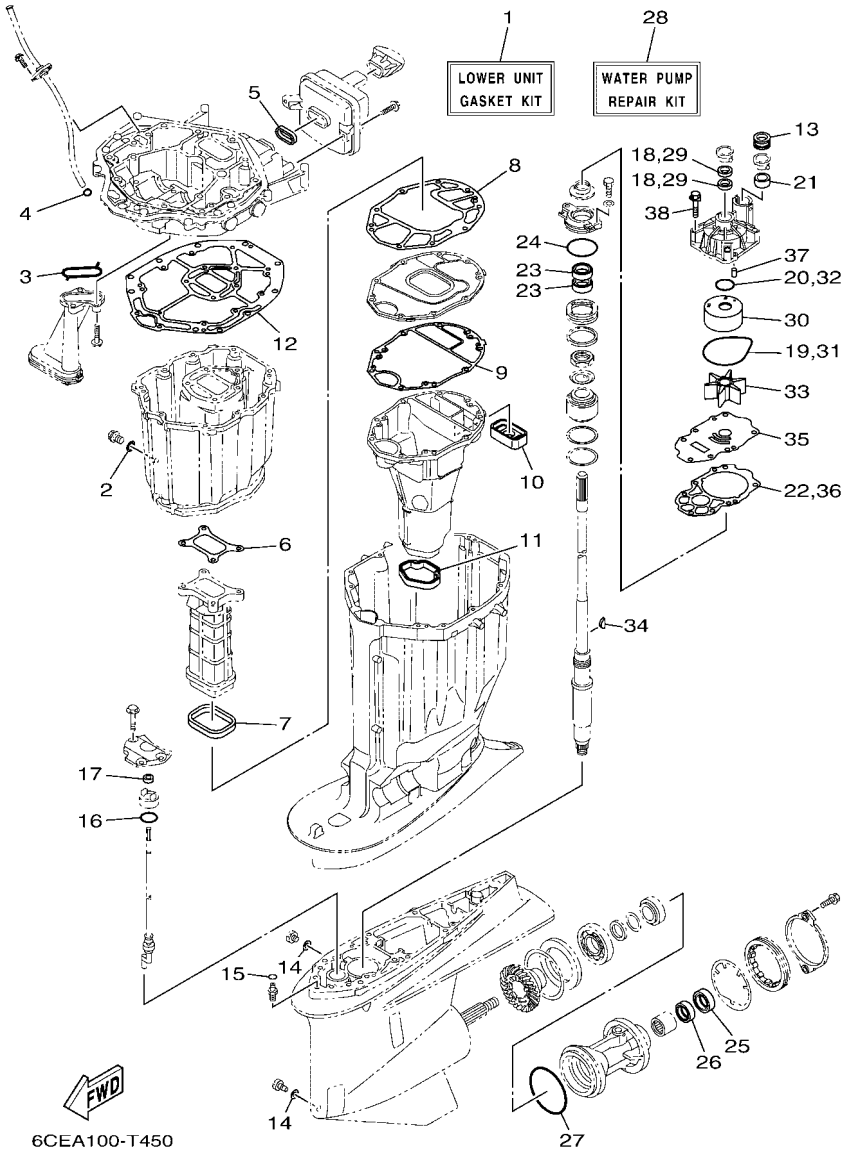

FIG. 49 REPAIR KIT 2

REF. NO.	PART NO.	DESCRIPTION	XCA	UCA	NCA	NCA2	NCA2	REMARKS
27	93211–02001	.O-RING	1	1	1	1	1	
28	6CE–W0078–01	WATER PUMP REPAIR KIT	1	1	1	1	1	
29	93104–22M07	.OIL SEAL	2	2	2	2	2	
30	6AW–44322–00	.INSERT, CARTRIDGE	1	1	1	1	1	
31	93210–94003	.O-RING	1	1	1	1	1	
32	93210–37160	.O-RING	1	1	1	1	1	
33	6CE–44352–00	.IMPELLER	1	1	1	1	1	
34	90280–04002	.KEY, WOODRUFF	1	1	1	1	1	
35	6CE–44323–01	.OUTER PLATE, CARTRIDGE	1	1	1	1	1	
36	6CE–44315–00	.GASKET, WATER PUMP	1	1	1	1	1	
37	93606–12019	.PIN, DOWEL	2	2	2	2	2	
38	90119–08M14	.BOLT, WITH WASHER	4	4	4	4	4	

PART NO.	REF. NO.
6CE–11000–03	3 – 1
6CE–11110–12–9S	5 – 2
6CE–11120–12–9S	5 – 12
6S5–11133–10	5 – 3
	5 – 13
6CB–11181–00	5 – 25
	48 – 2
6CB–11191–02	5 – 30
6CB–11192–02	5 – 34
6CB–11193–00	5 – 31
	48 – 3
6CB–11194–00	5 – 35
	48 – 4
67F–11301–00	5 – 19
6CB–1131B–00	3 – 12
	48 – 19
6CE–1131C–00–9S	3 – 9
68T–11325–00	1 – 4
	3 – 32
63P–11325–01	1 – 1
	3 – 10
	3 – 19
67F–11325–01	1 – 7
	5 – 20
63P–11325–11	1 – 16
	33 – 2
67F–11328–00	5 – 21
6AW–1132N–01	1 – 5
	3 – 34
6AW–1132P–00	1 – 3
	3 – 30
6CB–11351–00	3 – 29
	48 – 9
6CB–11355–00	34 – 13
	48 – 13
6CB–1135A–00	6 – 6
6CB–11410–00	4 – 1
6CB–11416–00	4 – 5
6CB–11416–10	4 – 5
6CB–11416–20	4 – 5
6CB–11416–30	4 – 5
6CB–11416–40	4 – 5
6CB–11417–00	4 – 6
6CB–11417–10	4 – 6
6CB–11417–20	4 – 6
6CB–11417–30	4 – 6
6CB–11417–40	4 – 6
6CB–11426–03	4 – 7

PART NO.	REF. NO.
6CB–11427–03	4 – 8
6CB–11478–00	4 – 2
6CB–1149A–00	6 – 10
6CB–11567–00	8 – 17
6CB–11590–02	8 – 28
6CB–11603–00	4 – 12
6CE–11631–02	4 – 11
6CB–11633–00	4 – 13
63P–11654–10	4 – 10
6JD–11656–00	4 – 14
6JD–11656–10	4 – 14
6JD–11656–20	4 – 14
6CB–11998–00	5 – 42
6CB–11999–00	5 – 43
6CB–12111–00	8 – 1
6CB–12113–00	8 – 4
51Y–12119–00	8 – 7
6DA–12121–00	8 – 2
6CB–12171–00	8 – 9
6CB–12172–00	8 – 13
6CB–12181–00	8 – 11
6CB–12182–00	8 – 15
6CE–12411–00	1 – 2
	3 – 21
67F–12412–00	3 – 22
6CE–12413–A0–9S	3 – 24
6CE–12413–B0–9S	3 – 23
6CB–12422–10–9S	3 – 25
6CB–12427–11	3 – 26
	48 – 8
6CB–1242F–00	6 – 2
	48 – 5
6CB–1243E–00	7 – 15
6CE–1244G–00	7 – 12
6CE–1244H–00	7 – 14
6CE–12481–10	18 – 24
6CE–12482–10	10 – 8
6CE–12483–00	18 – 18
6CB–12483–01	10 – 26
6CB–12484–00	10 – 10
6CE–12485–00	18 – 26
6CE–1248A–00	18 – 16
6AW–12572–00	26 – 18
6CB–12576–10	7 – 3
6CB–12577–00	7 – 8
6R3–12581–00	26 – 19
6AW–12582–00	26 – 20
6R3–12583–00	26 – 21

PART NO.	REF. NO.
6P2–12615–00	8 – 25
6P2–12623–00	8 – 20
	8 – 23
6CB–12645–01	8 – 19
6CB–1264A–01	8 – 22
6P2–12663–00	8 – 21
	8 – 24
6CB–13016–00	1 – 10
	13 – 5
6AW–13119–00	34 – 11
6AW–13132–00	13 – 32
6CB–13161–10	12 – 1
6CB–13171–10	12 – 5
6CB–13300–00	34 – 9
6CB–13329–00	34 – 10
6CB–13411–00	34 – 6
6AW–13415–00	34 – 7
	49 – 3
6CE–13437–61	17 – 18
N26–13440–03	1 – 6
	3 – 36
6CE–13446–10–9S	3 – 38
6CB–13473–00	34 – 17
	48 – 15
6CB–13477–00	3 – 39
	48 – 16
6CB–13490–00	34 – 16
6CB–13532–10	10 – 2
6CB–13533–00	10 – 1
6CB–13545–00	10 – 18
6CB–13546–01	10 – 22
6CB–13547–00	10 – 23
6CB–13548–00	10 – 25
6CB–13556–00	11 – 3
	48 – 12
68V–13577–00	14 – 4
6CB–13577–00	12 – 4
	12 – 8
6CB–13593–00	13 – 22
69J–13631–00	34 – 12
6CE–13641–00	9 – 5
6CB–13645–00	9 – 6
6CB–13646–00	9 – 7
6CB–13711–00	11 – 2
63P–13716–00	13 – 21
6CB–13751–10	11 – 1
6DA–13758–00	40 – 2
6AW–13761–00	12 – 2

PART NO.	REF. NO.
6AW–13761–00	12 – 6
6AW–13781–00	13 – 34
6CB–13782–00	10 – 16
6AW–13784–00	13 – 35
6CB–13898–11	11 – 8
6CB–13898–20	11 – 7
6CB–13906–01	13 – 8
6CB–13907–11	13 – 23
63P–13915–00	1 – 11
	13 – 24
6CB–13971–01	14 – 10
6CB–13972–00	14 – 12
6CB–13974–01	14 – 11
6AW–1410B–00	12 – 3
	12 – 7
69J–14137–00	14 – 3
6CB–14146–00	13 – 10
6P2–14149–00	14 – 2
6CB–14180–12	13 – 1
6CB–14181–01	13 – 15
6CB–14182–02	13 – 2
6P2–14191–00	13 – 16
68V–14216–00	13 – 12
6CB–14216–00	13 – 6
6CB–14239–00	13 – 17
6P2–14386–00	13 – 37
6AW–1441J–00	9 – 11
6CB–14429–01	13 – 19
6CE–14435–00	21 – 32
6CB–14440–01	9 – 9
6CB–1447B–00	13 – 33
6CB–14546–00	13 – 26
6CB–14564–00	13 – 9
63P–14567–00	13 – 36
6CE–14711–01	33 – 20
6CB–14750–A0	33 – 9
6CB–14755–00	33 – 11
	49 – 5
6CB–1475A–00	10 – 27
6CB–1475F–00	10 – 28
6CB–1475G–10	10 – 31
6CB–1475H–00	13 – 13
6CB–1475J–00	13 – 14
6CE–14872–00	18 – 25
	18 – 28
6CB–14984–00	1 – 12
	13 – 31
6CB–14985–00	13 – 25

PART NO.	REF. NO.
6CE–14987–00	40 – 3
6EK–14989–00	10 – 30
6CE–15100–10	3 – 2
6AW–15142–00	5 – 38
6CB–15142–00	6 – 8
6CB–15187–00	3 – 5
6CB–15311–01	34 – 1
6BB–15316–00	33 – 29
6CB–15319–00	3 – 43
6CB–15362–00	34 – 18
6G8–15363–00	3 – 41
6CB–15373–01	9 – 8
6CB–15377–00	34 – 19
6CE–15411–00–9S	3 – 14
6CE–15421–10–9S	3 – 15
6CB–15451–01	3 – 17
	48 – 7
6CB–15481–00	3 – 6
6CB–15512–00	8 – 29
6CB–15544–00	6 – 4
6CB–2134V–00	5 – 40
69J–2134X–00	9 – 16
6E5–21744–00	10 – 24
6GR–23113–00	31 – 84
6CB–2416A–00	10 – 5
69J–24170–00	9 – 14
69J–2419A–01	9 – 15
6CB–24217–00	13 – 7
60E–24300–01	14 – 9
6CB–24313–10	15 – 18
6CB–24314–11	15 – 2
6CB–24315–00	26 – 13
6CB–24317–00	14 – 6
6CB–24323–00	14 – 7
6CB–24324–00	14 – 5
6E5–24351–51	15 – 3
6AW–24360–01	16 – 1
6G8–24376–00	10 – 29
6CE–24376–01	18 – 27
6CE–24377–00	18 – 17
6AW–24377–01	15 – 4
688–24378–00	7 – 2
	10 – 21
	10 – 36
	18 – 30
6CE–24378–00	7 – 13
6E5–24378–00	14 – 8
68V–24379–10	13 – 11

PART NO.	REF. NO.
6CB–24410–01	13 – 27
6CB–24452–10	13 – 18
4SV–24453–00	13 – 38
6CB–24460–00	13 – 4
6CB–24461–00	14 – 1
6P3–24469–00	15 – 10
6CB–24482–00	13 – 20
6CB–24491–00	13 – 30
6CB–24492–00	13 – 28
6CB–24501–01	1 – 9
	13 – 3
6P3–24519–00	15 – 9
6P3–24560–22	15 – 7
6P3–24562–21	15 – 8
6P3–24563–01	1 – 14
	15 – 12
6P3–24564–00	1 – 13
	15 – 11
6CB–24566–00	15 – 13
6CB–24592–00	13 – 29
6CB–24596–01	15 – 20
69J–28100–02	15 – 22
67F–2812A–00	20 – 31
6CB–41132–01	33 – 13
6CB–41134–00	33 – 14
	49 – 6
6CB–41135–00	33 – 17
	49 – 8
6CE–41136–00	33 – 19
	49 – 9
6CE–41137–01	33 – 1
6CB–41138–00	33 – 16
	49 – 7
6CB–42134–00	2 – 13
6AW–42169–00	26 – 15
6CE–42195–10	28 – 8
6BG–42384–00	26 – 2
6DA–42384–00	25 – 23
6CE–42510–00–8D	30 – 5
6CE–42510–00–CE	30 – 5
6CE–42610–02	2 – 1
6CE–42610–22–CE	2 – 1
6CB–42615–01	25 – 5
6BG–42617–00	21 – 9
6CB–42617–00	21 – 10
6CE–4261A–00	2 – 2
6CE–4261A–00–CE	2 – 2
6CB–42628–00	2 – 16

PART NO.	REF. NO.
6CB–42629–00	21 – 11
6CE–42635–00	2 – 3
6CB–42643–00	26 – 29
6CB–42644–00	26 – 30
6CB–42647–A0	2 – 6
6CB–42662–00	5 – 44
6AW–42663–00	2 – 12
6CE–42675–02	2 – 19
6CE–42675–22	2 – 19
6CE–42676–02	2 – 20
6CE–42676–22	2 – 20
6CE–42677–01	2 – 21
6CE–42677–22	2 – 21
6CE–42678–02	2 – 18
6CE–42678–22	2 – 18
6CE–42681–03	2 – 22
6CE–42681–22	2 – 22
6CE–42682–03	2 – 23
6CE–42682–22	2 – 23
6AW–42697–10	2 – 17
6CB–42710–00–8D	25 – 1
6CB–42710–00–CE	25 – 1
6CB–42716–00	25 – 6
69J–42717–00	26 – 11
6DA–42717–00	25 – 22
69J–42723–01	21 – 26
6E5–42724–00	33 – 8
6CE–42725–02	25 – 2
6H4–42726–00	26 – 4
6H1–42726–21	26 – 1
61A–42727–00	26 – 5
64G–42727–00	26 – 6
6CE–42733–00	26 – 7
6CE–42734–00	26 – 8
6CE–42741–01–8D	27 – 1
6CE–42741–01–CE	27 – 1
6CB–42743–00	25 – 26
6CB–42744–00	26 – 35
6H4–42748–00	25 – 24
68F–42753–00	25 – 32
6CB–42756–00	25 – 30
69M–42758–01	18 – 5
	20 – 10
6CB–42761–00	25 – 3
6CB–42766–00	25 – 28
6CB–42769–01	33 – 12
6CE–42771–01–8D	27 – 2
6CE–42771–01–CE	27 – 2

PART NO.	REF. NO.
6CE–42774–A0	27 – 15
6AW–42785–00	26 – 17
6CE–42786–01	26 – 9
6CE–42787–01	26 – 10
6EE–42794–40	25 – 34
6EE–42794–50	25 – 35
6CB–42815–02–8D	25 – 7
6CB–42815–02–CE	25 – 7
6CB–42816–02–8D	25 – 8
6CB–42816–02–CE	25 – 8
6CB–42817–02–8D	25 – 9
6CB–42817–02–CE	25 – 9
6CB–42818–00	25 – 13
6CB–42819–00	25 – 14
69J–43111–11–8D	29 – 1
69J–43111–11–CE	29 – 1
69J–43112–02–8D	29 – 12
69J–43112–02–CE	29 – 12
6E5–43126–10	29 – 39
6R3–43131–30	29 – 18
61A–43132–00	29 – 10
61A–43133–00	29 – 13
66T–43144–00	25 – 17
6G5–43144–00	29 – 29
6E5–43145–01	37 – 8
6G5–43148–00	29 – 34
61A–43181–01	29 – 31
6G5–43185–02	29 – 32
61A–43311–22–8D	29 – 26
61A–43311–22–CE	29 – 26
6AW–43376–00	30 – 3
	43 – 15
	46 – 15
69J–43800–11–8D	31 – 1
69J–43800–11–CE	31 – 1
69J–43801–01	31 – 4
6GR–43804–00	32 – 3
6GR–43805–00	32 – 2
6GR–4380F–00	32 – 6
6CE–4380P–00	31 – 12
6CE–43810–01	31 – 3
61A–43811–00	31 – 9
63P–43812–20	31 – 76
61A–43813–02	31 – 18
6H1–43814–11	31 – 17
69J–43816–00	31 – 62
69J–43817–00	31 – 67
61A–43818–00	31 – 25

PART NO.	REF. NO.
69J–4381C–00	31 – 30
	31 – 35
69J–4381J–00	31 – 63
69J–43820–01	31 – 78
61A–43821–02	31 – 77
69J–43828–00	31 – 70
6H1–43829–00	31 – 73
69J–4382E–00	31 – 11
69J–43830–01	31 – 33
69J–43831–00	31 – 65
69J–43833–02	31 – 21
69J–43835–10	31 – 19
6CE–43840–01	31 – 2
6CJ–43841–00	31 – 42
6CJ–43843–00	31 – 53
6H1–43844–10	31 – 55
63P–43844–20	31 – 50
69J–43845–00	31 – 28
69A–4384F–00	31 – 39
69J–4384G–00	31 – 58
6H1–4384G–11	31 – 54
69J–4384H–00	31 – 10
61A–4384H–10	31 – 81
6CJ–4384M–00	31 – 38
69J–43851–00	31 – 49
69J–43853–00	31 – 45
69J–43854–00	31 – 57
69J–43855–00	31 – 52
6H1–43856–10	31 – 56
61A–43861–00	31 – 14
	31 – 16
	31 – 74
63P–43861–20	31 – 6
6D8–43863–00	31 – 27
	31 – 75
61A–43864–00	31 – 80
6GR–43864–00	32 – 12
60V–4386A–00	31 – 44
6GR–4386K–00	32 – 7
61A–43871–00	31 – 15
69J–43871–00	31 – 61
6H1–43872–00	31 – 7
61A–43874–00	31 – 79
6H1–43875–00	31 – 29
61A–43875–10	31 – 82
61A–43876–01	31 – 26
67C–43879–10	32 – 9
69J–43880–11	32 – 1

PART NO.	REF. NO.
69J–43881–11	32 – 10
6GR–43882–01	32 – 11
6H1–43883–00	31 – 43
69J–43888–00	31 – 71
69J–4388E–01	31 – 23
69J–4388F–00	31 – 68
69J–4388H–00	31 – 66
69J–4388J–00	31 – 20
6GR–43892–00	32 – 4
6CJ–43893–00	31 – 46
69J–43894–00	31 – 41
69J–43899–01	31 – 31
61A–4389H–01	31 – 8
69J–4389J–00	31 – 32
	31 – 36
6CE–44117–10	28 – 14
6CE–44118–A0	28 – 18
6CE–44120–21	28 – 20
6CE–44121–10	28 – 16
6CE–44122–20	28 – 9
6CE–44142–20	28 – 7
6CE–44150–00	35 – 12
	41 – 12
6CF–44150–00	44 – 12
6CE–44150–10	35 – 12
	41 – 12
6CF–44150–10	44 – 12
6CE–44150–20	41 – 12
6CF–44150–20	44 – 12
6CE–44194–00	30 – 30
6CE–44311–01	35 – 14
	41 – 14
	44 – 14
6AW–44312–00	35 – 20
	36 – 6
	41 – 20
	43 – 13
	44 – 20
	46 – 13
6CB–44312–00	35 – 27
	41 – 27
	44 – 27
6CE–44315–00	35 – 24
	41 – 24
	44 – 24
	49 – 22
	49 – 36
6AW–44322–00	35 – 16

PART NO.	REF. NO.
6AW–44322–00	41 – 16
	44 – 16
	49 – 30
6CE–44323–01	35 – 23
	41 – 23
	44 – 23
	49 – 35
6CE–44352–00	35 – 21
	41 – 21
	44 – 21
	49 – 33
6CE–44361–00	36 – 3
6CE–44362–00	36 – 4
	43 – 11
	46 – 11
6D0–44362–01	36 – 27
	42 – 15
	45 – 15
6AW–44363–00	36 – 7
	43 – 14
	46 – 14
6CE–44363–00	43 – 14
	46 – 14
6AW–44365–00	35 – 19
	36 – 1
	36 – 5
	41 – 19
	43 – 12
	44 – 19
	46 – 12
	49 – 21
6AW–44366–00	33 – 45
	36 – 2
	43 – 9
	43 – 9
	46 – 9
	46 – 9
	49 – 13
6D0–44366–00	36 – 28
	42 – 16
	45 – 16
6D0–44367–00	36 – 26
	42 – 14
	45 – 14
6P2–44391–00	25 – 25
6CE–44511–00	30 – 32
6CE–44514–00	30 – 22
6CE–44526–00	30 – 23

PART NO.	REF. NO.
6G5–44526–00	29 – 4
6CE–44532–00	30 – 25
6CE–44533–00	30 – 31
6CE–44536–00	30 – 24
6CE–44551–00–CA	30 – 10
6CE–44552–00–CA	30 – 20
6CE–44555–00	30 – 14
6CE–44574–00	30 – 12
6CE–44575–00	30 – 13
6CE–45111–01–8D	33 – 25
6CE–45111–01–CE	33 – 25
6CB–45113–01	33 – 26
	49 – 12
6CE–45123–00	33 – 24
	49 – 11
6CE–45127–00	33 – 23
	49 – 10
6BB–45152–01	33 – 30
61A–45155–00	33 – 34
6CE–45181–01	33 – 18
6CE–45211–10–8D	33 – 44
	43 – 6
	43 – 6
6CE–45211–10–CE	43 – 6
	43 – 6
	46 – 6
	46 – 6
6P2–45214–00	36 – 14
	42 – 2
	45 – 2
6P2–45215–00	36 – 15
	42 – 3
	45 – 3
6CE–45224–00	36 – 18
	42 – 6
	45 – 6
6CE–45225–00	36 – 19
	42 – 7
	45 – 7
6CE–45244–00	35 – 39
	41 – 39
	44 – 39
6G5–45251–02	1 – 15
	29 – 3
6CE–45300–04–8D	35 – 1
	41 – 1
6CE–45300–04–CE	41 – 1
6CF–45300–05–CE	44 – 1

PART NO.	REF. NO.
6CE–45300–14–8D	35 – 1
	41 – 1
6CE–45300–14–CE	41 – 1
6CF–45300–15–CE	44 – 1
6CE–45300–23–8D	41 – 1
6CE–45300–23–CE	41 – 1
6CF–45300–23–CE	44 – 1
6CE–45301–00–8D	35 – 2
	41 – 2
6CE–45301–00–CE	41 – 2
	44 – 2
69J–45318–01	33 – 32
6CE–45321–10	35 – 9
	41 – 9
	44 – 9
6CE–45321–20	35 – 9
	41 – 9
	44 – 9
6CE–45332–00–CA	35 – 64
	41 – 64
6CF–45332–01–CA	44 – 62
6CE–45335–00–9S	35 – 29
	41 – 29
	44 – 29
688–45341–10	35 – 5
	41 – 5
	44 – 5
6AW–45344–00	35 – 35
	41 – 35
	44 – 35
6CE–45361–10	35 – 79
	41 – 79
	44 – 75
6CE–45373–00	1 – 19
	36 – 22
	42 – 10
	45 – 10
6CE–45375–00	35 – 8
	41 – 8
	44 – 8
663–45376–00	35 – 7
	41 – 7
	44 – 7
63P–45378–00	33 – 47
	36 – 24
	42 – 12
	43 – 7
	43 – 7

PART NO.	REF. NO.
63P–45378–00	45 – 12
	46 – 7
	46 – 7
63P–45379–00	33 – 42
6CB–45383–00	35 – 77
	41 – 77
	44 – 73
6CB–45384–00	35 – 78
	41 – 78
	44 – 74
6CE–45501–00	35 – 41
	41 – 41
	44 – 41
6CE–45501–10	35 – 41
	41 – 41
	44 – 41
6CE–45501–20	41 – 41
	44 – 41
6CE–45539–00	35 – 40
	41 – 40
	44 – 40
6CE–45550–00	35 – 42
	41 – 42
6CF–45550–00	44 – 42
6CF–45560–01	44 – 45
676–45567–00	35 – 75
	41 – 75
6CB–45567–00	35 – 52
	41 – 52
	44 – 50
676–45567–10	35 – 75
	41 – 75
6CB–45567–10	35 – 52
	41 – 52
	44 – 50
676–45567–20	35 – 75
	41 – 75
6CB–45567–20	35 – 52
	41 – 52
	44 – 50
676–45567–30	35 – 75
	41 – 75
6CB–45567–30	35 – 52
	41 – 52
676–45567–40	35 – 75
	41 – 75
6CB–45567–40	35 – 52

PART NO.	REF. NO.
6CB–45567–40	41 – 52
	44 – 50
676–45567–50	35 – 75
	41 – 75
6CB–45567–50	35 – 52
	41 – 52
	44 – 50
6CE–45571–00	35 – 66
	41 – 66
6CB–45576–00	35 – 67
	41 – 67
6CF–45576–00	44 – 64
6CB–45577–00	35 – 72
	41 – 72
	44 – 69
6CB–45577–10	35 – 72
	41 – 72
	44 – 69
6CB–45577–20	35 – 72
	41 – 72
	44 – 69
6CB–45577–30	35 – 72
	41 – 72
	44 – 69
6CB–45577–40	35 – 72
	41 – 72
	44 – 69
6CB–45577–50	35 – 72
	41 – 72
	44 – 69
6CB–45577–60	35 – 72
	41 – 72
	44 – 69
6K1–45578–01	44 – 71
6K1–45578–10	44 – 71
6K1–45578–20	44 – 71
6K1–45578–30	44 – 71
6K1–45578–40	44 – 71
6K1–45578–50	44 – 71
6K1–45578–60	44 – 71
6CE–45587–00	35 – 33
	41 – 33
	44 – 33
6CE–45587–10	35 – 33
	41 – 33
	44 – 33
6CE–45587–20	35 – 33
	41 – 33

PART NO.	REF. NO.
6CE–45587–20	44 – 33
6CE–45587–30	35 – 33
	41 – 33
	44 – 33
6CE–45587–40	35 – 33
	41 – 33
	44 – 33
6CE–45587–50	35 – 33
	41 – 33
	44 – 33
6CE–45587–60	35 – 33
	41 – 33
	44 – 33
6CB–45611–00	35 – 53
	41 – 53
6CF–45611–01	44 – 51
6CE–45631–00	35 – 62
	41 – 62
	44 – 60
6E5–45633–01	35 – 63
	41 – 63
	44 – 61
6CB–45634–00	35 – 54
	41 – 54
	44 – 52
61A–45635–00	35 – 58
	41 – 58
	44 – 56
6H1–45668–00	35 – 57
	41 – 57
	44 – 55
6CB–45824–00	35 – 46
	41 – 46
	44 – 47
6CE–45930–20	36 – 34
	42 – 22
6D0–45970–10	36 – 38
	42 – 26
6CE–45970–20	36 – 34
	42 – 22
6CE–45972–20	36 – 34
	42 – 22
6CE–45974–20	36 – 34
	42 – 22
6CE–45976–20	36 – 34
	42 – 22
6CE–45978–20	36 – 34
	42 – 22

PART NO.	REF. NO.
69J–45987–00	36 – 29
	42 – 17
	45 – 17
688–45997–01	36 – 30
	42 – 18
	45 – 18
6CE–45B70–20	36 – 36
	42 – 24
6CE–45B72–20	36 – 36
	42 – 24
6CE–45B74–20	36 – 36
	42 – 24
6CE–45C81–10	36 – 35
	36 – 37
	42 – 23
	42 – 25
6ML–4820A–00	28 – 1
6Y8–48277–00	38 – 16
6E5–61350–02	37 – 1
6E5–61351–01	37 – 2
6E5–61355–00	37 – 5
6CE–68303–00	28 – 27
6P2–81336–00	20 – 33
6CE–81337–01	17 – 12
6CE–81410–00	17 – 3
6CB–81443–00	22 – 6
6CB–81639–10	20 – 27
6CE–81800–01	24 – 1
6CE–81801–01	24 – 5
6CE–81807–00	24 – 8
6CB–81809–00	24 – 14
6CE–81810–00	24 – 3
67F–81813–00	24 – 6
6CE–81820–00	24 – 7
6CE–81821–00	24 – 11
6CB–81822–02	22 – 4
6CB–81823–A0	22 – 8
6CB–81826–00	24 – 22
69J–81828–00	24 – 23
6CE–81830–00	24 – 16
6CB–81832–00	24 – 9
6CB–81836–00	24 – 10
6CE–81839–00	24 – 19
67F–8183R–00	24 – 13
60V–8183T–00	24 – 17
6P2–8183X–00	20 – 18
6CE–81840–01	24 – 4
67F–81841–00	24 – 12

PART NO.	REF. NO.
6CE–81842–00	24 – 18
6BR–81845–00	18 – 7
67F–81846–00	24 – 24
6CE–81850–00	24 – 2
6CE–81869–00	24 – 21
67F–81891–00	24 – 15
6CE–81919–20	20 – 35
6CB–81923–00	20 – 36
6P2–81925–01	20 – 1
6CB–81929–00	20 – 4
6C5–81941–00	24 – 20
6CB–81948–02	20 – 8
6CE–81949–01	22 – 13
6AW–81950–00	20 – 15
6CB–81952–00	21 – 34
6AW–8195A–00	20 – 22
6CE–81960–10	18 – 11
6CE–81972–00–9S	18 – 12
6CE–81975–00	18 – 13
6CE–81980–00	21 – 2
6EE–81994–40	17 – 19
6EE–81994–50	17 – 20
6AH–81996–00	25 – 36
6CB–82105–01	20 – 39
6P2–82113–00	20 – 30
69J–82147–00	29 – 28
6E5–82148–00	29 – 8
6H1–82148–00	29 – 6
6AW–82149–00	30 – 16
67F–82151–00	20 – 25
6CE–82151–00	20 – 21
67F–82151–10	20 – 26
67F–82151–40	20 – 23
67F–82151–50	20 – 24
6CE–82170–11	20 – 20
6GR–82181–00	32 – 5
6CB–82310–00	19 – 1
6CB–82314–00	19 – 3
6CB–82316–01	18 – 3
6P2–82380–00	11 – 5
6CB–82388–00	21 – 17
6Y8–82509–10	38 – 8
6Y8–82521–11	38 – 15
6P2–82560–01	21 – 20
6BR–82563–01	21 – 25
69J–82587–00	21 – 27
6CE–82588–00	20 – 6
6E9–82588–00	21 – 21

PART NO.	REF. NO.
6CB–82589–01	21 – 8
6CE–82590–15	21 – 1
6CB–82594–00	21 – 4
6CE–8259M–00	22 – 12
6CE–825E0–01	39 – 1
68F–82846–00	20 – 29
6X4–83383–00	38 – 5
6X4–83386–00	38 – 6
6E5–83558–00	33 – 36
6DA–83614–00	21 – 29
63P–83614–01	21 – 28
6AW–83651–00	21 – 23
6AW–8366B–01	23 – 1
	47 – 1
60V–8366D–00	23 – 2
	47 – 2
69J–83672–11	30 – 1
6Y8–8454G–00	38 – 11
6P2–85075–00	19 – 6
64J–85516–00	18 – 4
	20 – 9
6CB–85516–00	17 – 17
6CB–85544–00	20 – 28
689–85547–00	15 – 1
6CB–85547–00	9 – 10
6CB–85561–00	17 – 5
6CE–85564–00	28 – 6
6CB–85580–00	17 – 4
6CE–85592–00	17 – 8
6P2–85780–00	6 – 11
6CB–85790–00	21 – 19
63P–85886–00	21 – 31
6P2–85896–00	19 – 5
6CE–8591A–13	18 – 1
6C5–86120–00	10 – 3
6CB–86120–00	6 – 1
6Y8–86260–12	38 – 2
6AA–86261–22	38 – 3
6Y8–86267–00	38 – 1
K0F–A3233–00	4 – 15
K0F–A3741–00	8 – 5
K0F–A3742–00	8 – 6
K0F–A3743–00	8 – 3
K0F–A3751–00	8 – 8
K0F–A3751–10	8 – 8
K0F–A3751–20	8 – 8
K0F–A3751–30	8 – 8
K0F–A3751–40	8 – 8
K0F–A3751–50	8 – 8
K0F–A3751–60	8 – 8
K0F–A3751–70	8 – 8
K0F–A3751–80	8 – 8
K0F–A3751–90	8 – 8
K0F–A3751–A0	8 – 8
K0F–A3751–B0	8 – 8
K0F–A3751–C0	8 – 8
K0F–A3751–D0	8 – 8
K0F–A3751–E0	8 – 8
K0F–A3751–F0	8 – 8
K0F–A3751–G0	8 – 8
K0F–A3751–H0	8 – 8
K0F–A3751–J0	8 – 8
K0F–A3751–K0	8 – 8
K0F–A3751–L0	8 – 8
K0F–A3751–M0	8 – 8
K0F–A3751–N0	8 – 8
K0F–A3751–P0	8 – 8
K0F–A3751–R0	8 – 8
K0F–A3751–S0	8 – 8
K0F–A3751–T0	8 – 8
K0F–A3753–00	8 – 8
K0F–A3753–10	8 – 8
K0F–A3753–20	8 – 8
K0F–A3753–30	8 – 8
K0F–A3753–40	8 – 8
K0F–A3753–50	8 – 8
K0F–A3753–60	8 – 8
K0F–A3753–70	8 – 8
6CB–W0001–03	48 – 1
6CE–W0001–23	49 – 1
6CE–W0078–01	1 – 20
	49 – 28
6CE–W009A–03–9S	5 – 1
6CE–W009C–03–9S	5 – 11
6CB–W1165–10	4 – 9
6CE–W4267–00	2 – 24
6CE–W4267–22	2 – 24
6CB–W4624–00	8 – 27
6CE–W8145–01	17 – 1
6EK–W9010–00	17 – 2
90101–12065	29 – 43
90101–12066	29 – 43
90101–14004	30 – 17
90105–06035	6 – 3
	9 – 4
90105–06037	3 – 28
90105–06037	3 – 45
	6 – 7
90105–06039	26 – 34
90105–06151	3 – 18
	3 – 40
	22 – 9
90105–06M07	3 – 13
	5 – 22
90105–06M08	12 – 9
90105–08175	3 – 7
	5 – 28
90105–08178	6 – 5
90105–08220	5 – 29
90105–08M61	35 – 80
	41 – 80
	44 – 76
90105–08M87	22 – 5
90105–10M00	36 – 23
	42 – 11
	45 – 11
90105–14005	30 – 27
90109–06277	5 – 33
	5 – 37
90109–06M80	27 – 14
90110–05039	36 – 21
	42 – 9
	45 – 9
90110–08M05	31 – 83
90111–06142	27 – 4
	27 – 7
90111–06144	27 – 3
	27 – 8
90111–08078	2 – 7
90116–10041	36 – 9
	43 – 1
	46 – 1
90116–10066	43 – 1
	46 – 1
90119–06269	9 – 2
90119–06287	33 – 43
90119–06291	26 – 33
90119–06293	18 – 6
	20 – 11
90119–06M17	9 – 20
	15 – 14
90119–06MA3	18 – 14
90119–07001	5 – 5
	5 – 15
90119–07234	5 – 6
	5 – 16
90119–08020	9 – 3
90119–08168	28 – 3
90119–08180	35 – 28
	41 – 28
	44 – 28
90119–08182	33 – 4
90119–08187	25 – 21
90119–08191	35 – 26
	41 – 26
	44 – 26
90119–08M14	49 – 38
90119–10007	33 – 27
90119–10008	36 – 13
	43 – 5
	46 – 5
90119–10009	36 – 12
	43 – 4
	46 – 4
90119–10024	29 – 25
	30 – 21
	30 – 33
90119–10038	36 – 9
	43 – 1
	46 – 1
90119–10050	8 – 18
90119–10060	43 – 4
	46 – 4
90119–10061	43 – 5
	46 – 5
90119–10M07	8 – 31
90149–11001	5 – 27
90151–05M05	3 – 33
90151–06M02	3 – 11
	3 – 20
	33 – 3
90152–05M08	36 – 16
	42 – 4
	45 – 4
90159–05059	39 – 3
90159–06053	27 – 11
90167–06M00	38 – 12
90170–10009	36 – 11
	43 – 3
	46 – 3
90170–16M19	35 – 43
	41 – 43
90170–16M19	44 – 43
90170–30M18	35 – 38
	41 – 38
	44 – 38
90171–18M04	36 – 32
	42 – 20
	45 – 20
90173–06001	27 – 9
90179–06M28	5 – 41
90179–08003	22 – 2
90183–02M03	35 – 60
	41 – 60
	44 – 58
90183–061A6	27 – 10
90185–05002	36 – 17
	36 – 20
	42 – 5
	42 – 8
	45 – 5
	45 – 8
90185–06M07	5 – 45
	28 – 12
90185–09M01	37 – 6
90185–14M00	30 – 18
	30 – 28
90185–22M11	29 – 21
90201–02M00	35 – 59
	41 – 59
	44 – 57
90201–06068	28 – 11
90201–06M02	33 – 40
90201–06M30	38 – 13
90201–10048	36 – 10
	43 – 2
	46 – 2
90201–10M01	8 – 32
90201–10M20	37 – 7
90201–11008	28 – 24
90201–12064	28 – 4
90201–12426	29 – 45
90201–13M01	29 – 44
90201–156J2	25 – 11
90201–16032	30 – 15
90201–16M00	35 – 44
	41 – 44
	44 – 44
90201–186F1	5 – 8
	5 – 18
90201–26M59	29 – 20
90201–32008	35 – 74
	41 – 74
90201–40M00	30 – 6
90201–41008	35 – 49
	41 – 49
90201–62008	35 – 32
	41 – 32
	44 – 32
90202–08M41	28 – 10
90202–40M47	30 – 9
90206–15M18	25 – 12
90214–30003	35 – 37
	41 – 37
	44 – 37
90249–06M19	29 – 35
90250–08M07	35 – 61
	41 – 61
	44 – 59
90280–04002	35 – 22
	41 – 22
	44 – 22
	49 – 34
90282–05008	35 – 76
	41 – 76
	44 – 72
90340–08002	35 – 4
	41 – 4
	44 – 4
90340–14M06	5 – 9
	34 – 4
90340–18M09	5 – 7
	5 – 17
90386–08008	28 – 2
90386–10001	28 – 25
90386–10M16	29 – 33
90386–11001	28 – 22
90386–15M73	25 – 10
90386–18M14	29 – 41
	31 – 24
90386–18M63	29 – 40
90386–25M31	29 – 19
90386–39M89	30 – 7
90387–05004	39 – 4
90387–06285	17 – 14
90387–06289	9 – 19
	15 – 16
90387–06M03	26 – 32

PART NO.	REF. NO.
90387–06M43	27 – 13
90387–07028	27 – 6
90387–08104	28 – 5
90387–08M37	25 – 20
90387–08M45	2 – 10
90387–10094	2 – 8
90387–10M05	29 – 36
90387–10M61	37 – 3
90387–11005	5 – 26
90387–28013	30 – 26
90401–19001	3 – 37
90430–06M03	5 – 23
90430–08003	1 – 18
	35 – 6
	41 – 6
	44 – 6
	49 – 14
90430–14115	5 – 10
90430–14M09	1 – 17
	34 – 5
	49 – 2
90445–07017	47 – 4
90445–07032	33 – 38
90445–07034	33 – 38
90445–09068	18 – 29
90445–09220	7 – 1
90445–096H2	7 – 10
90445–097F7	10 – 9
90445–107A5	18 – 19
90445–14019	26 – 23
90445–14021	26 – 14
90445–16015	26 – 16
90446–15003	20 – 19
	30 – 34
90462–06013	18 – 21
90462–10061	33 – 41
90464–06001	21 – 6
90464–07209	10 – 20
90464–07M20	10 – 35
90464–08004	11 – 9
90464–09013	7 – 5
	10 – 15
90464–09129	21 – 33
90464–10011	10 – 34
90464–10M59	7 – 4
90464–11012	10 – 32
90464–11121	21 – 13
90464–12009	14 – 14

PART NO.	REF. NO.
90464–12010	7 – 6
	10 – 13
	10 – 33
90464–12012	14 – 15
	14 – 16
	15 – 5
90464–12183	20 – 13
	21 – 15
90464–13227	22 – 10
90464–13249	9 – 21
	18 – 9
	20 – 12
90464–16001	21 – 24
	26 – 28
90464–18004	22 – 11
90464–18246	21 – 14
90464–20181	9 – 22
	10 – 19
	18 – 10
	20 – 14
	21 – 3
	21 – 16
90464–20258	25 – 33
90464–23001	10 – 6
90464–26002	7 – 9
	10 – 14
	18 – 23
90464–99004	9 – 12
90465–08M83	29 – 16
	29 – 23
90465–11M10	7 – 7
	7 – 11
	10 – 7
	10 – 12
	15 – 6
	15 – 19
	17 – 9
	18 – 31
	18 – 32
	18 – 33
	23 – 4
	26 – 3
	26 – 24
	29 – 22
	30 – 35
	33 – 37
	33 – 37
	38 – 10

PART NO.	REF. NO.
90465–11M10	39 – 5
	47 – 3
90465–11M59	7 – 16
90465–13M18	39 – 6
90465–13M24	21 – 7
90465–14M66	7 – 17
	14 – 13
90467–08004	18 – 34
90467–08M18	18 – 20
90467–090A0	10 – 11
90467–130A5	26 – 25
90467–140A8	26 – 26
	40 – 4
90467–140A9	26 – 27
	40 – 5
90468–18008	28 – 13
	28 – 17
90480–10M23	9 – 18
	15 – 15
90480–12314	17 – 16
	19 – 4
90480–13M24	27 – 12
90480–14029	26 – 31
90480–15M31	17 – 15
90480–16009	27 – 5
90480–22M81	25 – 19
90501–10M77	35 – 55
	41 – 55
	44 – 53
90506–16003	29 – 38
90506–22001	25 – 16
90560–12M01	37 – 4
91318–05025	31 – 59
91318–05040	31 – 64
91490–40030	36 – 33
	42 – 21
	45 – 21
91690–30020	29 – 37
91690–40010	3 – 16
91809–08006	5 – 4
	5 – 14
92990–06100	2 – 14
92990–06200	2 – 5
92990–08600	2 – 9
92990–18200	36 – 31
	42 – 19
	45 – 19
92995–14600	30 – 19

PART NO.	REF. NO.
92995–14600	30 – 29
93101–28019	35 – 30
	41 – 30
	44 – 30
	49 – 23
93101–30019	35 – 70
	41 – 70
	44 – 67
	49 – 26
93101–30030	35 – 69
	41 – 69
	44 – 66
	49 – 25
93102–38008	8 – 26
	48 – 11
93102–85008	4 – 4
	48 – 10
93104–22M07	35 – 15
	41 – 15
	44 – 15
	49 – 18
	49 – 29
93106–09014	35 – 11
	41 – 11
	44 – 11
	49 – 17
93106–10001	35 – 11
	41 – 11
	44 – 11
	49 – 17
93106–19001	31 – 5
93210–04279	38 – 9
93210–064A5	31 – 51
93210–07003	33 – 48
	36 – 25
	42 – 13
	43 – 8
	43 – 8
	45 – 13
	46 – 8
	46 – 8
	49 – 15
93210–08391	31 – 48
93210–09165	28 – 21
	31 – 72
93210–16275	37 – 9
93210–17239	31 – 22
93210–19MJ3	34 – 20

PART NO.	REF. NO.
93210–19MJ3	49 – 4
93210–24M79	3 – 42
	48 – 17
93210–26658	3 – 8
	34 – 15
	48 – 6
	48 – 14
93210–27370	3 – 44
	48 – 18
93210–33M49	35 – 10
	41 – 10
	44 – 10
	49 – 16
93210–35321	30 – 8
93210–37160	35 – 18
	41 – 18
	44 – 18
	49 – 20
	49 – 32
93210–64488	35 – 34
	41 – 34
	44 – 34
	49 – 24
93210–66001	31 – 69
93210–94003	35 – 17
	41 – 17
	44 – 17
	49 – 19
	49 – 31
93211–02001	35 – 71
	41 – 71
	44 – 68
	49 – 27
93306–209U0	35 – 65
	41 – 65
93311–83280	35 – 3
	41 – 3
	44 – 3
93311–85894	35 – 45
	41 – 45
	44 – 46
93315–43061	35 – 68
	41 – 68
	44 – 65
93332–00048	44 – 63
93332–000A4	35 – 48
	41 – 48
93332–000A5	35 – 73

PART NO.	REF. NO.
93332–000A5	41 – 73
93340–67011	35 – 51
	41 – 51
	44 – 49
93341–440U5	44 – 70
93399–99966	35 – 31
	41 – 31
	44 – 31
93410–10082	28 – 26
93410–18M05	29 – 42
93410–37M04	30 – 11
93420–36M01	33 – 33
93501–04011	35 – 56
	41 – 56
	44 – 54
93501–08001	31 – 47
93503–16003	31 – 37
93505–32038	31 – 13
	31 – 34
93604–07M13	28 – 19
93604–35236	31 – 60
93605–10108	8 – 10
	8 – 12
	8 – 14
	8 – 16
93606–12019	3 – 3
	3 – 4
	4 – 3
	35 – 25
	41 – 25
	44 – 25
	49 – 37
93606–19002	29 – 2
93606–19M23	33 – 22
93608–16M16	33 – 7
	33 – 28
	33 – 46
	34 – 3
	35 – 47
	36 – 8
	41 – 47
	42 – 1
	43 – 10
	43 – 10
	44 – 48
	45 – 1
	46 – 10
	46 – 10

PART NO.	REF. NO.
93700–06002	29 – 15
	29 – 27
94702–00400	1 – 8
	5 – 46
95022–06035	17 – 10
95023–06012	18 – 22
95027–06025	3 – 27
95380–06600	2 – 15
	10 – 4
95380–12600	29 – 46
95780–06300	38 – 14
95780–08300	2 – 11
95780–10300	30 – 4
	43 – 16
	46 – 16
95812–06025	34 – 8
95814–08020	20 – 3
95D75–06025	28 – 23
	28 – 28
95D75–06040	34 – 14
95D75–08030	9 – 1
95D75–08060	11 – 4
95D95–06010	33 – 35
95D95–06012	18 – 8
	21 – 5
	21 – 22
	21 – 30
	25 – 18
	25 – 27
	25 – 29
	25 – 31
95D95–06014	5 – 39
	15 – 21
	25 – 4
95D95–06016	6 – 9
	10 – 17
	15 – 17
	20 – 7
	21 – 18
	21 – 35
	22 – 7
	23 – 3
	26 – 12
	34 – 21
95D95–06020	9 – 13
	17 – 13
	18 – 2
	20 – 5

PART NO.	REF. NO.
95D95–06020	21 – 12
	33 – 10
95D95–06025	18 – 15
	19 – 2
95D95–06030	5 – 32
	5 – 36
	17 – 11
95D95–08012	25 – 15
95D95–08016	20 – 2
	20 – 37
	20 – 38
95D95–08025	5 – 24
97513–06520	20 – 17
97513–08545	22 – 1
97595–05520	17 – 7
97602–04310	32 – 8
97780–50620	20 – 32
97780–60516	2 – 4
97780–60520	26 – 22
97780–60620	38 – 7
97880–06035	38 – 12
97885–06010	29 – 11
	29 – 14
97980–06216	38 – 4
97985–04308	22 – 3
97985–06212	29 – 9
	29 – 17
97985–06216	30 – 2
97D95–06010	29 – 30
	33 – 39
97D95–06012	33 – 31
97E75–06525	28 – 15
97E75–06620	11 – 6
97E75–08535	33 – 21
	34 – 2
97E75–08560	33 – 15
97E75–10535	33 – 6
97E75–10545	33 – 5
97E75–10570	36 – 13
	43 – 5
	46 – 5
97E95–06510	29 – 7
97E95–06514	29 – 24
97E95–06516	9 – 17
	20 – 34
	39 – 2
	47 – 5
97E95–06520	19 – 7

PART NO.	REF. NO.
97E95–06525	29 – 5
97E95–06610	20 – 16
97E95–08520	35 – 36
	41 – 36
	44 – 36
98507–04008	13 – 39
98780–06530	3 – 31
98780–06550	3 – 35
99001–08600	35 – 13
	41 – 13
	44 – 13
99001–09600	35 – 13
	41 – 13
	44 – 13
99002–03600	31 – 40
99009–47500	35 – 50
	41 – 50
99530–08012	17 – 6
99530–14016	8 – 30