YAMAHA

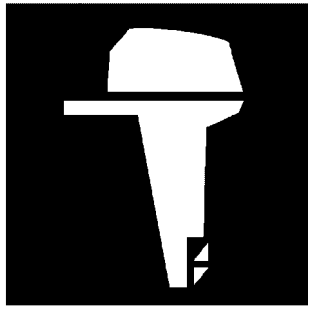

PARTS CATALOGUE

LF300CA-2020 (6CFB)

YAMAHA
GENUINE
Parts & Accessories

1U6CF-100EA

( )

LF300CA
PARTS CATALOGUE
©2025 by Yamaha Motor Co., Ltd.
1st edition, March 2025
All rights reserved.
Any reprinting or unauthorized use
without the written permission of
Yamaha Motor Co., Ltd.
is expressly prohibited.
Printed in Japan.

FOREWORD

This Parts Catalogue is related to the parts for the model(s) on the cover page. When you are ordering replacement parts, please refer to this Parts Catalogue and quote both part numbers and part names correctly.

1. Modifications or additions which have been made after the issue of the Parts Catalogue will be announced in the Parts News.
   It is advisable that you make the necessary corrections to the Parts Catalogue according to the Parts News.

2. Abbreviations
   The following abbreviations are used in this Parts Catalogue.
   "UR" Use specified parts number.
   "UN" Use as many as needed.
   "AP" Alternate Parts
   "LM" Locally Made (Parts need to be ordered locally)
   "F#" Frame No. (Applicable machine No.)
   "O/S" Over Size

3. The number of components for assembly
   - Parts, which are to be supplied in an assembly, are listed with a dot (.) in front of the part name as shown below.
   - The numeral appearing to the right of each component part indicates the quantity of parts for each assembly unit.

PART NO.	DESCRIPTION	Q'TY	REMARKS
2F5–83310–60	FRONT FLASHER LIGHT ASSY	2	
115–83311–60	.BULB (6V–18W)	1	

4. Applicable colours of graphics are represented in the "REMARKS" as shown below.

PART NO.	DESCRIPTION	Q'TY	REMARKS
2N4–24110–00–X5	FUEL TANK COMP.	2	MXR
3J1–24240–10	.GRAPHIC, FUEL TANK	1	FOR MXR

5. Note that the illustrations for reference in finding parts numbers are not to be used for assembling. When assembling, please use the applicable service manual.

6. The asterisk (*) before a reference number indicates modified items after the first edition.

7. Applicable Serial No.
   Engine Serial No.

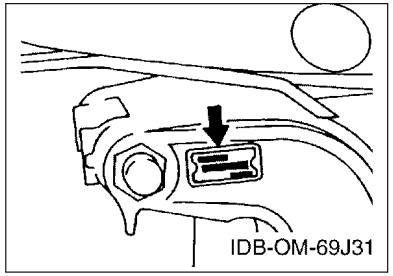

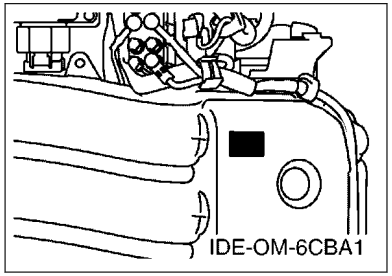

8. Applicable Engine Starting Serial No.

Model	Serial No.	Model	Serial No.
LF300CA	6CF-1019273		

9. Applicable Colour Code

Abbreviation	Colour Name	Colour Code
DBN1	DARK BLUISH GRAY 1	008D

10. Quantity Column Information

Column No.	Name Of Q'ty Column	Applicable Model
1	XCA	LF300XCA
2	UCA	LF300UCA

CONTENTS

SCHEDULED SERVICE PARTS.....1
TOP COWLING.....2
CYLINDER & CRANKCASE 1.....3
CRANKSHAFT & PISTON.....5
CYLINDER & CRANKCASE 2.....6
CYLINDER & CRANKCASE 3.....8
CYLINDER & CRANKCASE 4.....9
VALVE.....10
INTAKE 1.....13
INTAKE 2.....14
THROTTLE BODY ASSY 1.....16
THROTTLE BODY ASSY 2.....17
FUEL INJECTION PUMP 1.....18
FUEL INJECTION PUMP 2.....20
FUEL 1.....21
FUEL 2.....22
GENERATOR.....23
ELECTRICAL 1.....24
ELECTRICAL 2.....26
ELECTRICAL 3.....27
ELECTRICAL 4.....29
ELECTRICAL 5.....31
STARTING MOTOR.....32
BOTTOM COWLING 1.....33
BOTTOM COWLING 2.....35
BOTTOM COWLING 3.....37
CONTROL.....38
BRACKET 1.....40
BRACKET 2.....42
POWER TRIM & TILT ASSY 1.....44
POWER TRIM & TILT ASSY 2.....48
UPPER CASING.....49
OIL PAN.....51
LOWER CASING & DRIVE 1.....52
LOWER CASING & DRIVE 2.....56
OPTIONAL PARTS 1.....58
OPTIONAL PARTS 2.....59
OPTIONAL PARTS 3.....60
REPAIR KIT 1.....61
REPAIR KIT 2.....62

INDEX

NUMERICAL INDEX.....64

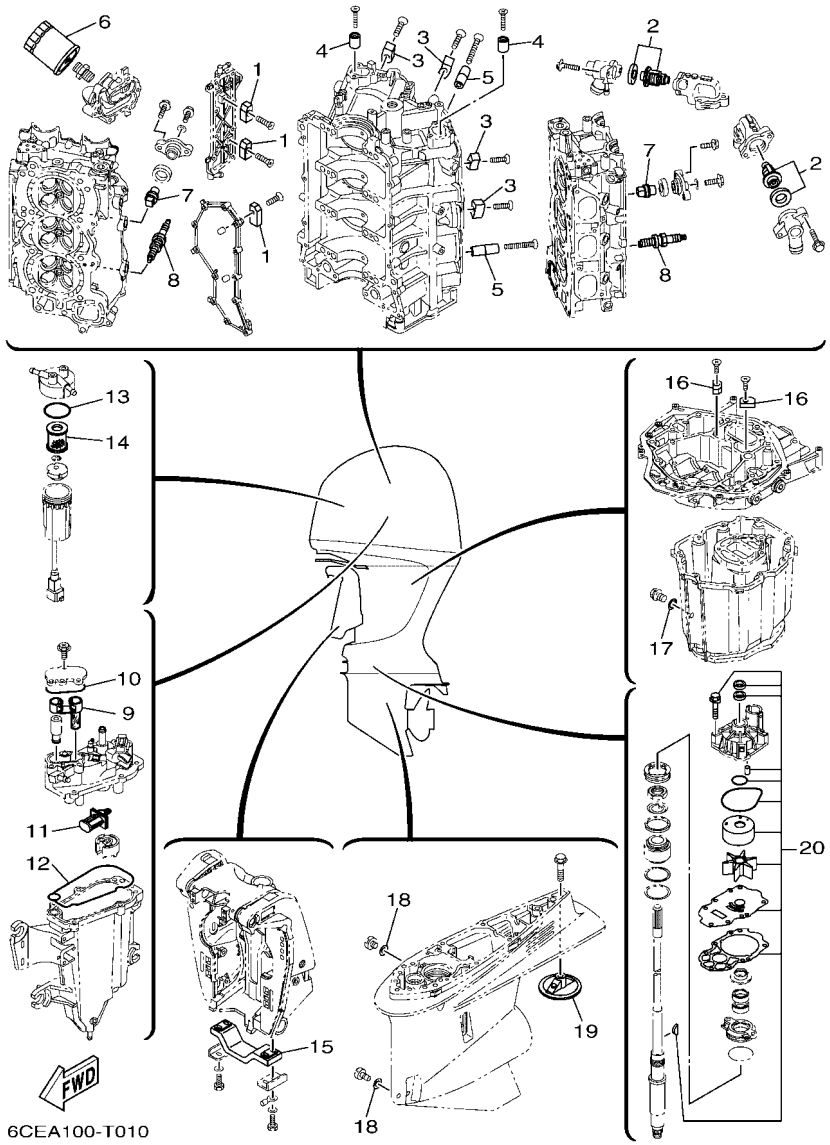

FIG. 1 SCHEDULED SERVICE PARTS

REF. NO.	PART NO.	DESCRIPTION	XCA	UCA				REMARKS
1	63P–11325–01	ANODE	4	4				
2	6CE–12411–00	THERMOSTAT	2	2				
3	6AW–1132P–00	ANODE 5	4	4				
4	68T–11325–00	ANODE	2	2				
5	6AW–1132N–01	ANODE 4	2	2				
6	N26–13440–03	ELEMENT ASSY, OIL CLEANER	1	1				
7	67F–11325–01	ANODE	8	8				
8	94702–00400	PLUG, SPARK (NGK LFR6A-11)	6	6				
9	6CB–24501–01	FILTER, FUEL	1	1				
10	6CB–13016–00	O-RING	1	1				
11	63P–13915–00	FILTER	1	1				
12	6CB–14984–00	GASKET, FLOAT CHAMBER	1	1				
13	6P3–24564–00	GASKET	1	1				
14	6P3–24563–01	ELEMENT, FILTER	1	1				
15	6G5–45251–02	ANODE	1	1				
16	63P–11325–11	ANODE	2	2				
17	90430–14M09	GASKET	1	1				
18	90430–08003	GASKET	2	2				
19	6CE–45373–00	ANODE	1	1				
20	6CE–W0078–01	WATER PUMP REPAIR KIT	1	1				

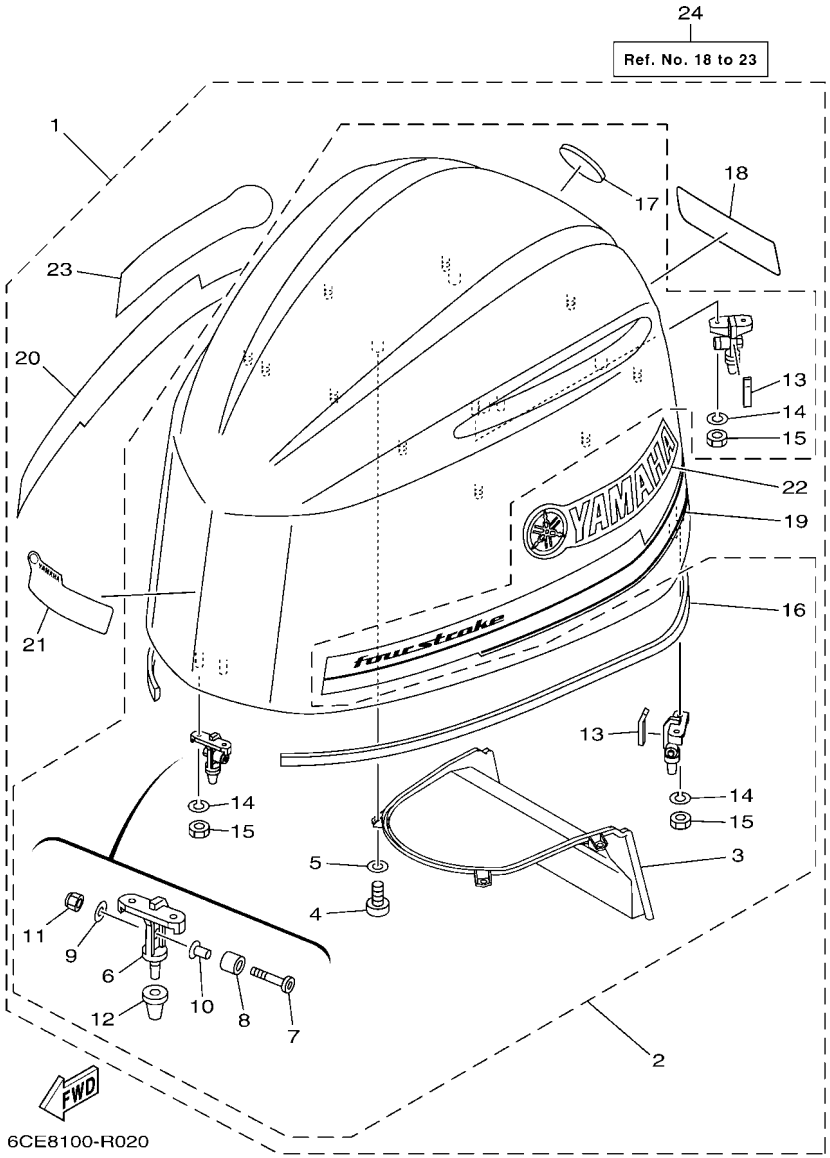

FIG. 2 TOP COWLING

REF. NO.	PART NO.	DESCRIPTION	XCA	UCA				REMARKS
1	6CE–42610–02	TOP COWLING ASSY	1	1				
2	6CE–4261A–00	.TOP COWLING W/O GRAPHICS	1	1				
3	6CE–42635–00	..DUCT, WATER SEPARATOR	1	1				
4	97780–60516	..SCREW, TAPPING	4	4				
5	92990–06200	..WASHER, PLAIN	4	4				
6	6CB–42647–A0	..HOLDER, CLAMP BAND	3	3				
7	90111–08078	..BOLT,HEX. SOCKET BUTTON	3	3				
8	90387–10094	..COLLAR	3	3				
9	92990–08600	..WASHER, PLATE	3	3				
10	90387–08M45	..COLLAR	3	3				
11	95780–08300	..NUT, FLANGE	3	3				
12	6AW–42663–00	..DAMPER 2	3	3				
13	6CB–42134–00	..COVER	2	2				
14	92990–06100	..WASHER, SPRING	6	6				
15	95380–06600	..NUT, HEXAGON	6	6				
16	6CB–42628–00	..SEAL	1	1				
17	6AW–42697–10	..TUNING FORK MARK	1	1				
18	6CE–42678–02	.GRAPHIC, REAR	1	1				
19	6CE–42675–02	.GRAPHIC, SIDE 1	1	1				
20	6CE–42676–02	.GRAPHIC, SIDE 2	1	1				
21	6CE–42677–01	.GRAPHIC, FRONT	1	1				
22	6CE–42681–03	.MARK, COWLING	1	1				
23	6CE–42682–03	.MARK, COWLING	1	1				
24	6CE–W4267–00	GRAPHIC SET, TOP COWLING	1	1				AP FOR USA

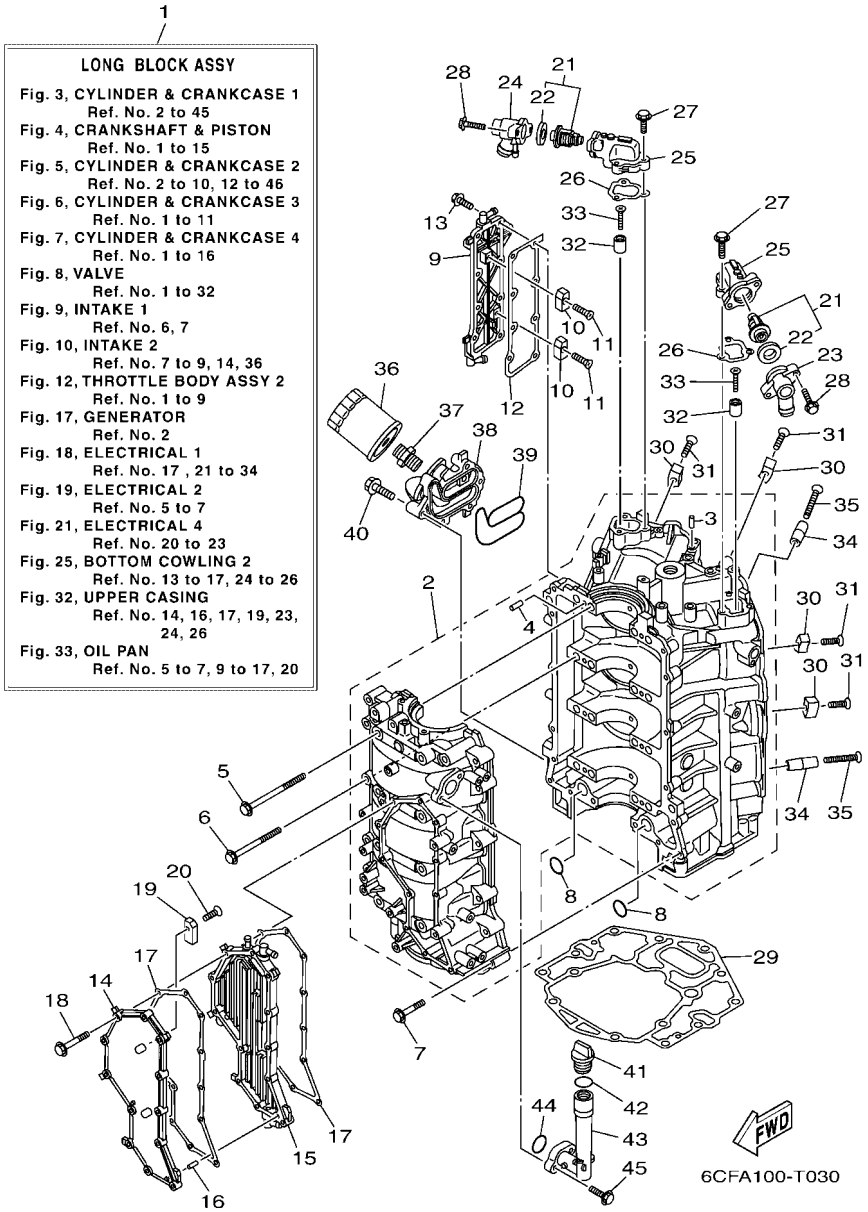

FIG. 3 CYLINDER & CRANKCASE 1

REF. NO.	PART NO.	DESCRIPTION	XCA	UCA				REMARKS
1	6CE–11000–03	LONG BLOCK ASSY	1	1				
2	6CE–15100–10	CRANKCASE ASSY	1	1				
3	93606–12019	.PIN, DOWEL	3	3				
4	93606–12019	.PIN, DOWEL	8	8				
5	6CB–15187–00	BOLT	8	8				
6	6CB–15481–00	BOLT 1	8	8				
7	90105–08175	BOLT, FLANGE	16	16				
8	93210–26658	O-RING	2	2				
9	6CE–1131C–00–9S	COVER, JOINT	1	1				
10	63P–11325–01	ANODE	2	2				
11	90151–06M02	SCREW, COUNTERSUNK	2	2				
12	6CB–1131B–00	GASKET, COVER	1	1				
13	90105–06M07	BOLT, FLANGE	8	8				
14	6CE–15411–00–9S	COVER, CRANKCASE 1	1	1				
15	6CE–15421–10–9S	COVER, CRANKCASE 2	1	1				
16	91690–40010	PIN, SPRING	1	1				
17	6CB–15451–01	GASKET, CRANKCASE COVER 1	2	2				
18	90105–06151	BOLT, FLANGE	12	12				
19	63P–11325–01	ANODE	2	2				
20	90151–06M02	SCREW, COUNTERSUNK	2	2				
21	6CE–12411–00	THERMOSTAT	2	2				
22	67F–12412–00	.SEAL, THERMOSTAT	1	1				
23	6CE–12413–B0–9S	COVER, THERMOSTAT	1	1				
24	6CE–12413–A0–9S	COVER, THERMOSTAT	1	1				
25	6CB–12422–10–9S	COVER, HOUSING	2	2				
26	6CB–12427–11	GASKET, HOUSING COVER 1	2	2				
27	95027–06025	BOLT, FLANGE	6	6				

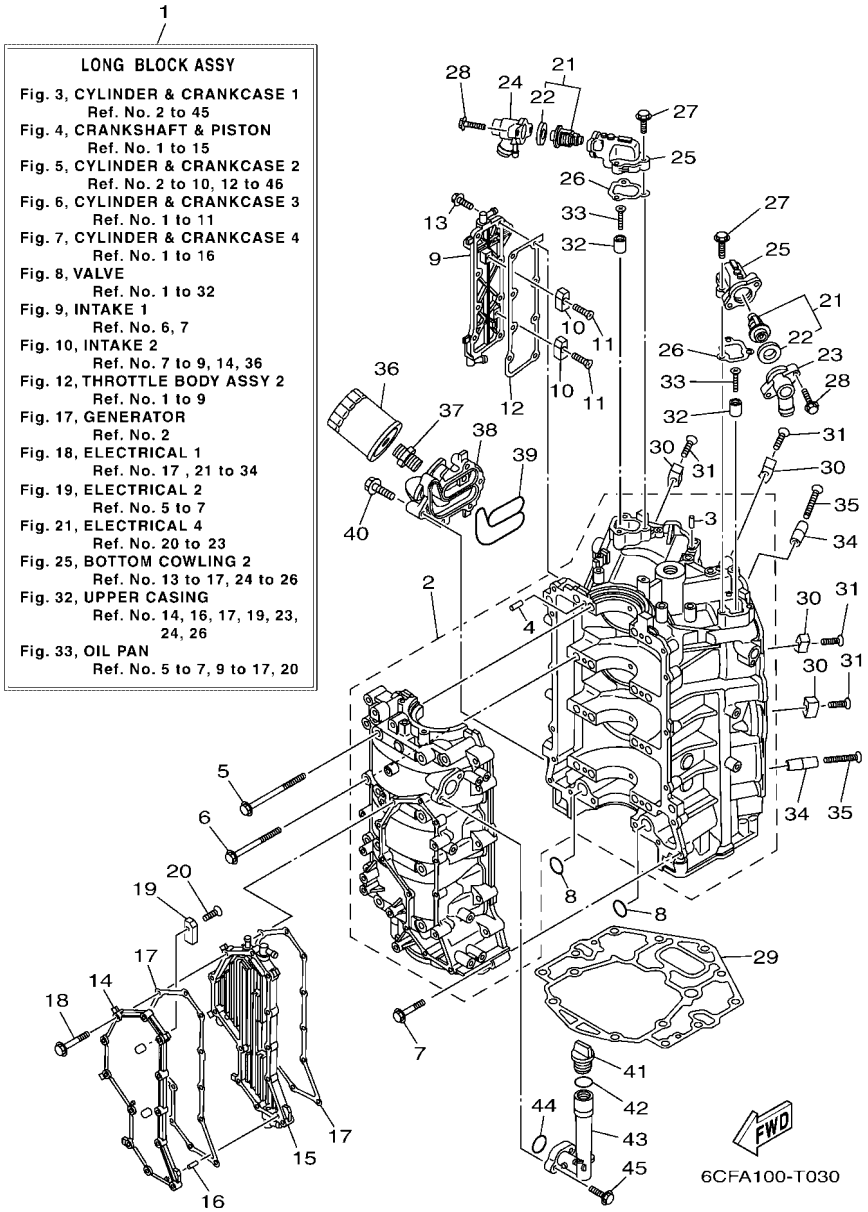

FIG. 3 CYLINDER & CRANKCASE 1

REF. NO.	PART NO.	DESCRIPTION	XCA	UCA				REMARKS
28	90105–06037	BOLT, FLANGE	4	4				
29	6CB–11351–00	GASKET, CYLINDER	1	1				
30	6AW–1132P–00	ANODE 5	4	4				
31	98780–06530	SCREW, FLAT HEAD	4	4				
32	68T–11325–00	ANODE	2	2				
33	90151–05M05	SCREW, COUNTERSUNK	2	2				
34	6AW–1132N–01	ANODE 4	2	2				
35	98780–06550	SCREW, FLAT HEAD	2	2				
36	N26–13440–03	ELEMENT ASSY, OIL CLEANER	1	1				
37	90401–19001	BOLT, UNION	1	1				
38	6CE–13446–10–9S	CONNECTOR	1	1				
39	6CB–13477–00	GASKET	1	1				
40	90105–06151	BOLT, FLANGE	5	5				
41	6G8–15363–00	PLUG, OIL	1	1				
42	93210–24M79	O-RING	1	1				
43	6CB–15319–00	JOINT	1	1				
44	93210–27370	O-RING	1	1				
45	90105–06037	BOLT, FLANGE	2	2				

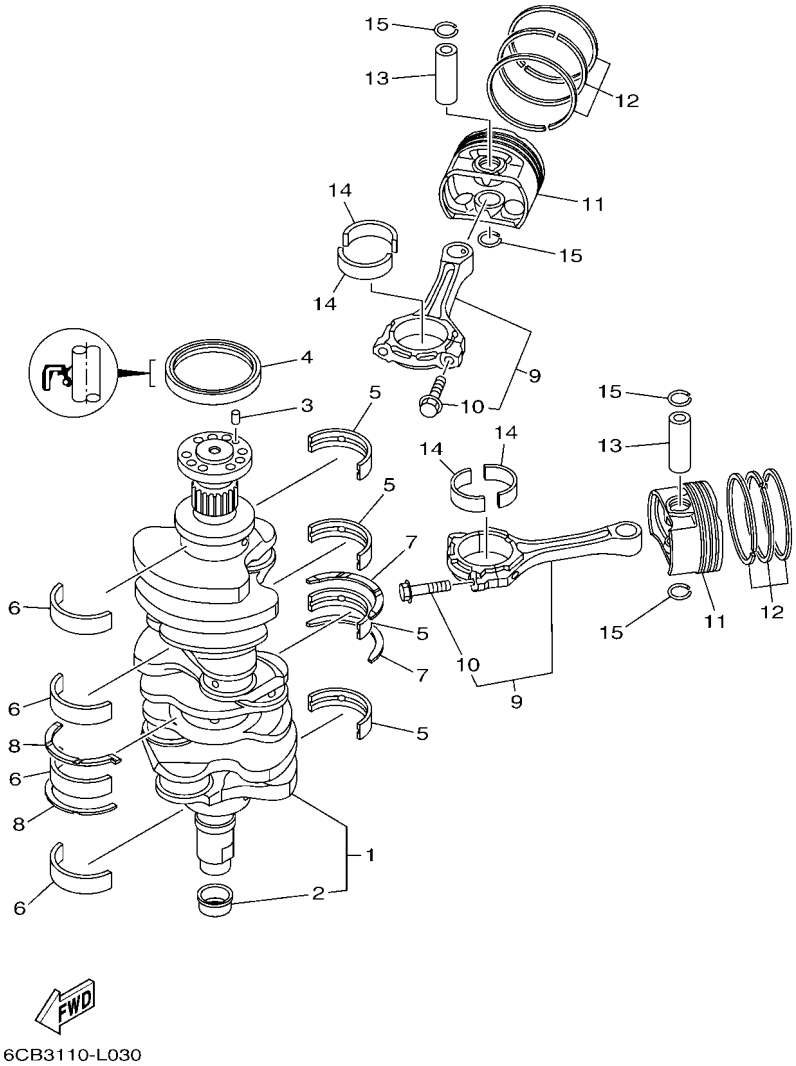

FIG. 4 CRANKSHAFT & PISTON

REF. NO.	PART NO.	DESCRIPTION	XCA	UCA				REMARKS
1	6CB–11410–00	CRANKSHAFT	1	1				
2	6CB–11478–00	.COLLAR	1	1				
3	93606–12019	PIN, DOWEL	1	1				
4	93102–85008	OIL SEAL	1	1				
5	6CB–11416–00	PLANE BEARING, CRANKSHAFT 1	4	4				UR PURPLE
	6CB–11416–10	PLANE BEARING, CRANKSHAFT 1	4	4				UR YELLOW
	6CB–11416–20	PLANE BEARING, CRANKSHAFT 1	4	4				UR RED
	6CB–11416–30	PLANE BEARING, CRANKSHAFT 1	4	4				UR GREEN
	6CB–11416–40	PLANE BEARING, CRANKSHAFT 1	4	4				UR BROWN
6	6CB–11417–00	PLANE BEARING, CRANKSHAFT 2	4	4				UR PURPLE
	6CB–11417–10	PLANE BEARING, CRANKSHAFT 2	4	4				UR YELLOW
	6CB–11417–20	PLANE BEARING, CRANKSHAFT 2	4	4				UR RED
	6CB–11417–30	PLANE BEARING, CRANKSHAFT 2	4	4				UR GREEN
	6CB–11417–40	PLANE BEARING, CRANKSHAFT 2	4	4				UR BROWN
7	6CB–11426–03	BEARING, THRUST 1	2	2				
8	6CB–11427–03	BEARING, THRUST 2	2	2				
9	6CB–W1165–10	CONNECTING ROD ASSY	6	6				
10	63P–11654–10	.BOLT, CONNECTING ROD	2	2				
11	6CE–11631–02	PISTON (STD)	6	6				
12	6CB–11603–00	PISTON RING SET (STD)	6	6				
13	6CB–11633–00	PIN, PISTON	6	6				
14	6JD–11656–00	PLANE BEARING, CONNECTING ROD	12	12				UR BLACK
	6JD–11656–10	PLANE BEARING, CONNECTING ROD	12	12				UR PINK
	6JD–11656–20	PLANE BEARING, CONNECTING ROD	12	12				UR RED
15	K0F–A3233–00	RING,HOLE SNAP	12	12				

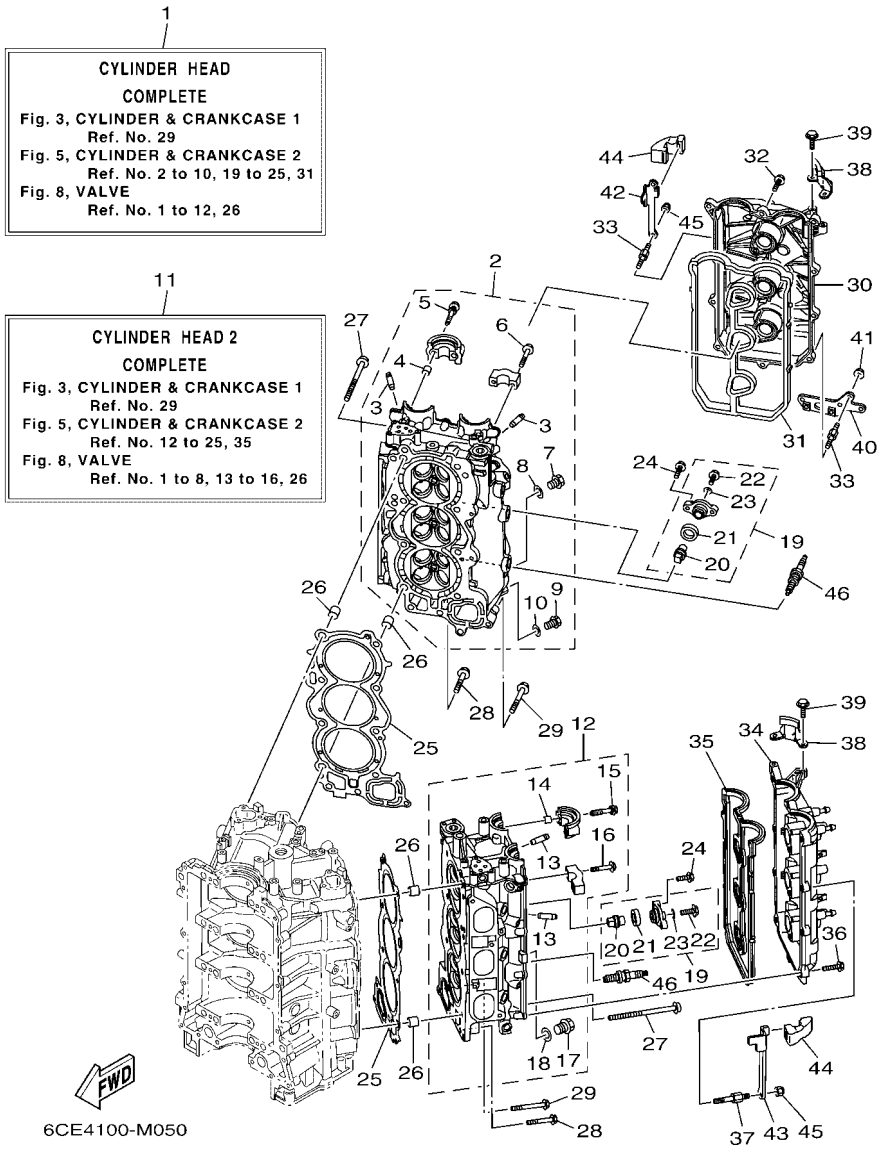

FIG. 5 CYLINDER & CRANKCASE 2

REF. NO.	PART NO.	DESCRIPTION	XCA	UCA				REMARKS
1	6CE–W009A–03–9S	CYLINDER HEAD COMPLETE	1	1				
2	6CE–11110–12–9S	CYLINDER HEAD ASSY	1	1				
3	6S5–11133–10	.GUIDE, VALVE 1	12	12				
4	91809–08006	.PIN, DOWEL	4	4				
5	90119–07001	.BOLT, WITH WASHER	4	4				
6	90119–07234	.BOLT, WITH WASHER	12	12				
7	90340–18M09	.PLUG, STRAIGHT SCREW	1	1				
8	90201–186F1	.WASHER, PLATE	1	1				
9	90340–14M06	.PLUG, STRAIGHT SCREW	1	1				
10	90430–14115	.GASKET	1	1				
11	6CE–W009C–03–9S	CYLINDER HEAD 2 COMPLETE	1	1				
12	6CE–11120–12–9S	CYLINDER HEAD ASSY 2	1	1				
13	6S5–11133–10	.GUIDE, VALVE 1	12	12				
14	91809–08006	.PIN, DOWEL	4	4				
15	90119–07001	.BOLT, WITH WASHER	4	4				
16	90119–07234	.BOLT, WITH WASHER	12	12				
17	90340–18M09	.PLUG, STRAIGHT SCREW	1	1				
18	90201–186F1	.WASHER, PLATE	1	1				
19	67F–11301–00	ANODE COVER ASSY	8	8				
20	67F–11325–01	.ANODE	1	1				
21	67F–11328–00	.GROMMET, ANODE	1	1				
22	90105–06M07	.BOLT, FLANGE	1	1				
23	90430–06M03	.GASKET	1	1				
24	95D95–08025	BOLT, FLANGE DEEP RECESS	16	16				
25	6CB–11181–00	GASKET, CYLINDER HEAD 1	2	2				
26	90387–11005	COLLAR	4	4				
27	90149–11001	SCREW	16	16				

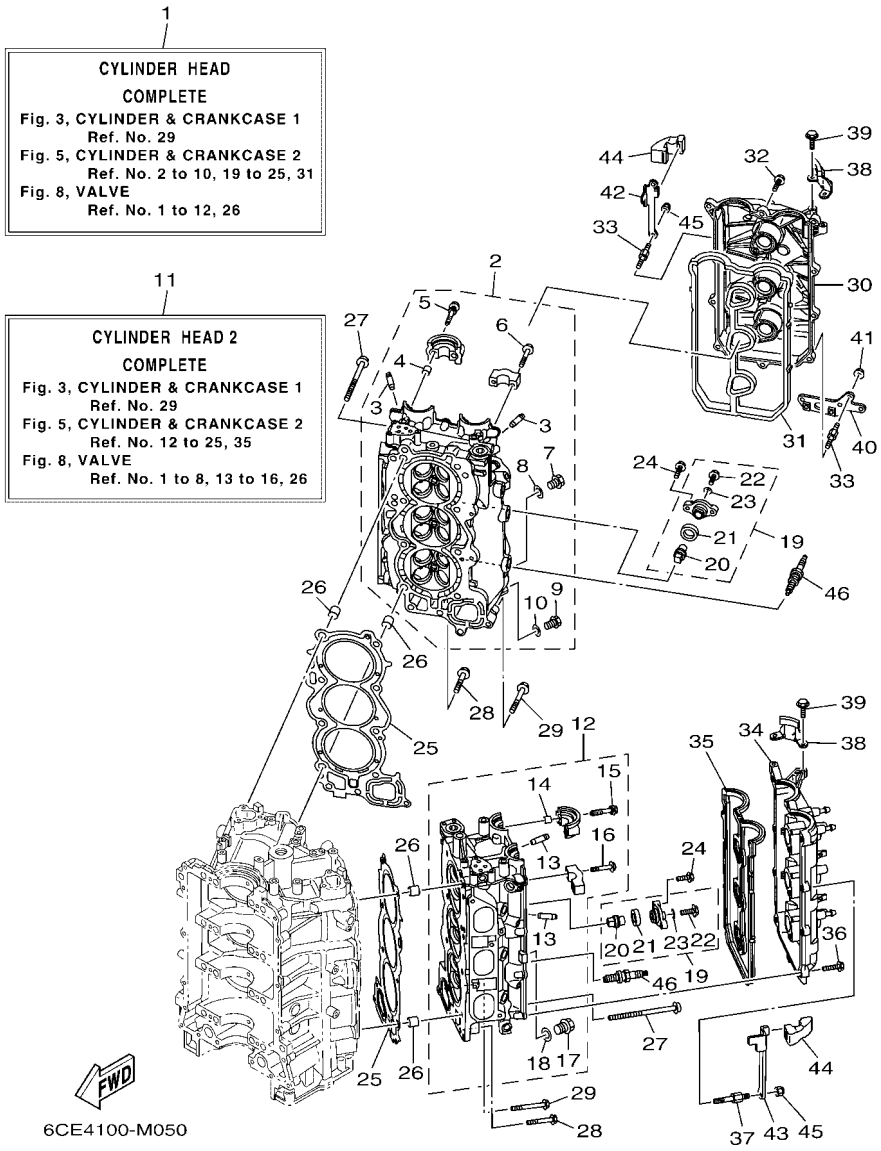

FIG. 5 CYLINDER & CRANKCASE 2

REF. NO.	PART NO.	DESCRIPTION	XCA	UCA				REMARKS
28	90105–08175	BOLT, FLANGE	4	4				
29	90105–08220	BOLT, FLANGE	2	2				
30	6CB–11191–02	COVER, CYLINDER HEAD 1	1	1				
31	6CB–11193–00	GASKET, HEAD COVER 1	1	1				
32	95D95–06030	BOLT, FLANGE DEEP RECESS	9	9				
33	90109–06277	BOLT	4	4				
34	6CB–11192–02	COVER, CYLINDER HEAD 2	1	1				
35	6CB–11194–00	GASKET, HEAD COVER 2	1	1				
36	95D95–06030	BOLT, FLANGE DEEP RECESS	11	11				
37	90109–06277	BOLT	2	2				
38	6AW–15142–00	GUIDE 1	2	2				
39	95D95–06014	BOLT, FLANGE DEEP RECESS	4	4				
40	6CB–2134V–00	BRACKET	1	1				
41	90179–06M28	NUT	2	2				
42	6CB–11998–00	BRACKET 1	1	1				
43	6CB–11999–00	BRACKET 2	1	1				
44	6CB–42662–00	DAMPER	2	2				
45	90185–06M07	NUT, SELF-LOCKING	4	4				
46	94702–00400	PLUG, SPARK (NGK LFR6A-11)	6	6				

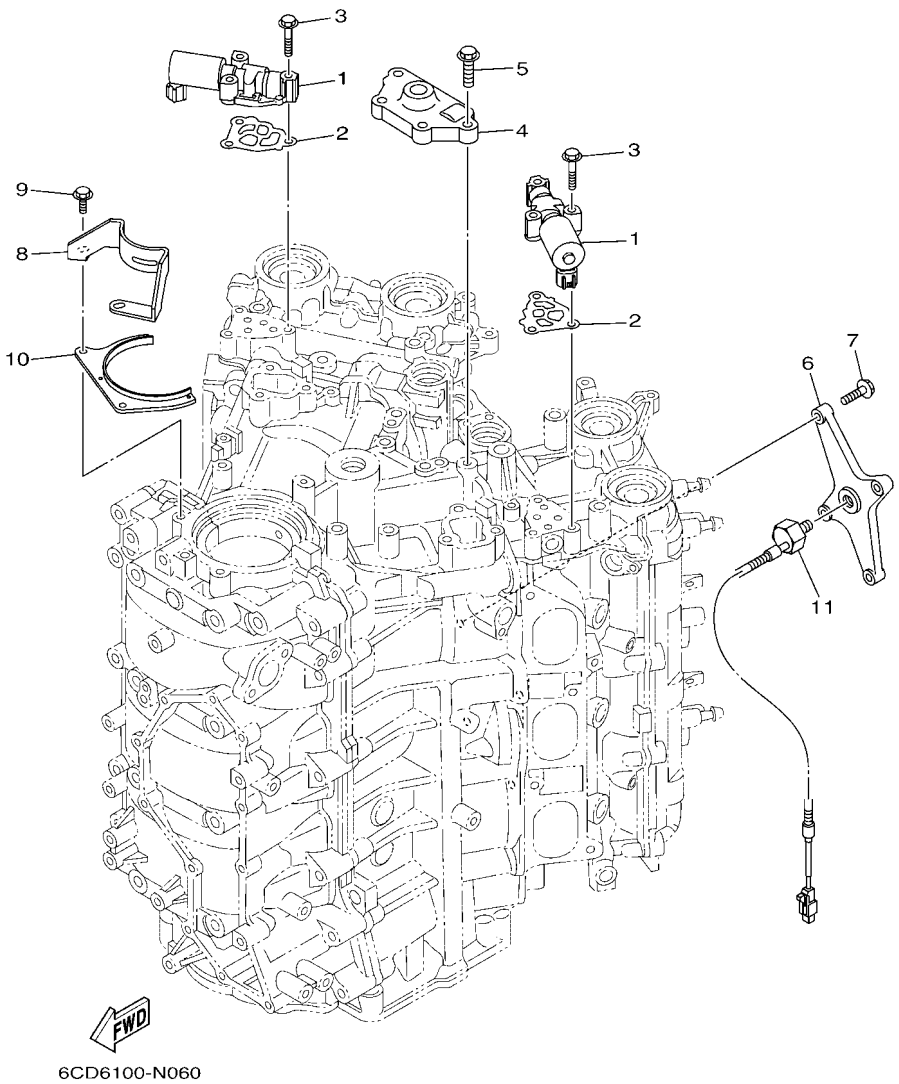

FIG. 6 CYLINDER & CRANKCASE 3

REF. NO.	PART NO.	DESCRIPTION	XCA	UCA				REMARKS
1	6CB–86120–00	SOLENOID VALVE ASSY	2	2				
2	6CB–1242F–00	GASKET, FILTER	2	2				
3	90105–06035	BOLT, FLANGE	6	6				
4	6CB–15544–00	STAY 1	1	1				
5	90105–08178	BOLT, FLANGE	4	4				
6	6CB–1135A–00	BRACKET	1	1				
7	90105–06037	BOLT, FLANGE	4	4				
8	6CB–15142–00	GUIDE 1	1	1				
9	95D95–06016	BOLT, FLANGE DEEP RECESS	2	2				
10	6CB–1149A–00	PLATE 1	1	1				
11	6P2–85780–00	SENSOR, KNOCK	1	1				

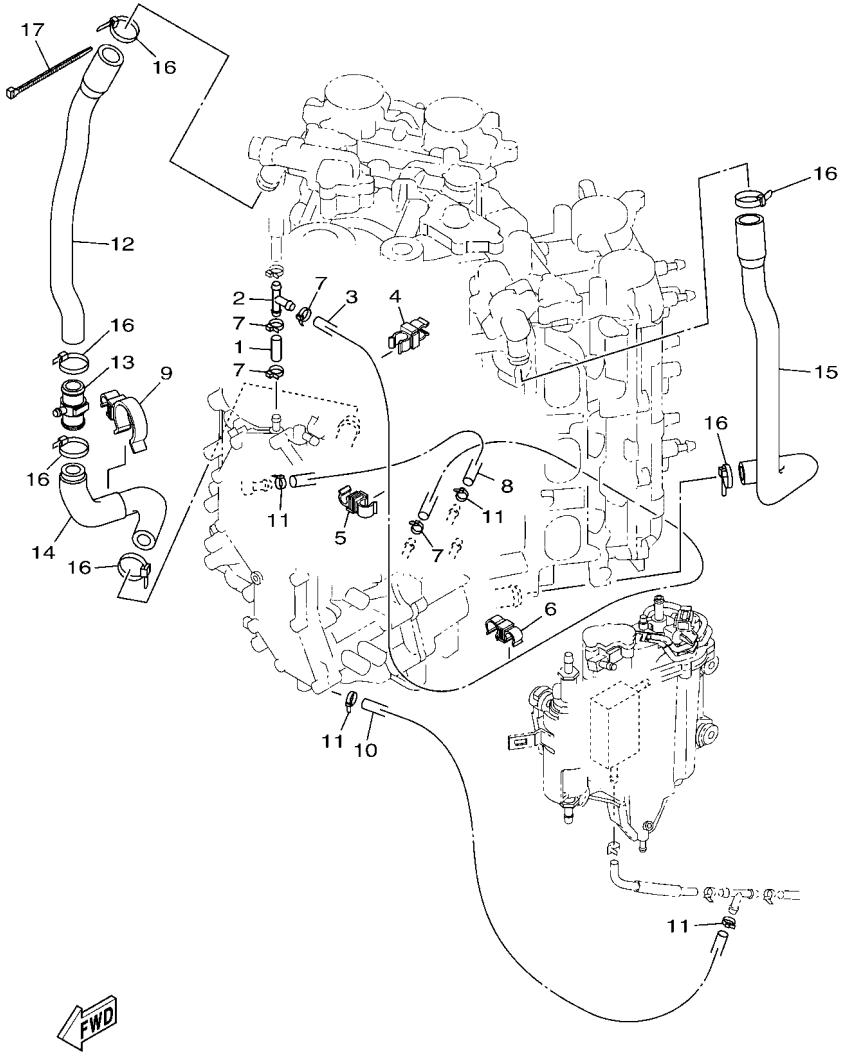

6JD1200-T070

FIG. 7 CYLINDER & CRANKCASE 4

REF. NO.	PART NO.	DESCRIPTION	XCA	UCA				REMARKS
1	90445–09220	HOSE (L30)	1	1				
2	688–24378–00	PIPE, JOINT 3	1	1				
3	6CB–12576–10	HOSE 1	1	1				
4	90464–10M59	CLAMP	1	1				
5	90464–09013	CLAMP	1	1				
6	90464–12010	CLAMP	1	1				
7	90465–11M10	CLAMP	4	4				
8	6CB–12577–00	HOSE 2	1	1				
9	90464–26002	CLAMP	1	1				
10	90445–096H2	HOSE (L280)	1	1				
11	90465–11M10	CLAMP	4	4				
12	6CE–1244G–00	HOSE, 4	1	1				
13	6CE–24378–00	PIPE, JOINT 3	1	1				
14	6CE–1244H–00	HOSE 5	1	1				
15	6CB–1243E–00	HOSE 2	1	1				
16	90465–11M59	CLAMP	6	6				
17	90465–14M66	CLAMP	1	1				

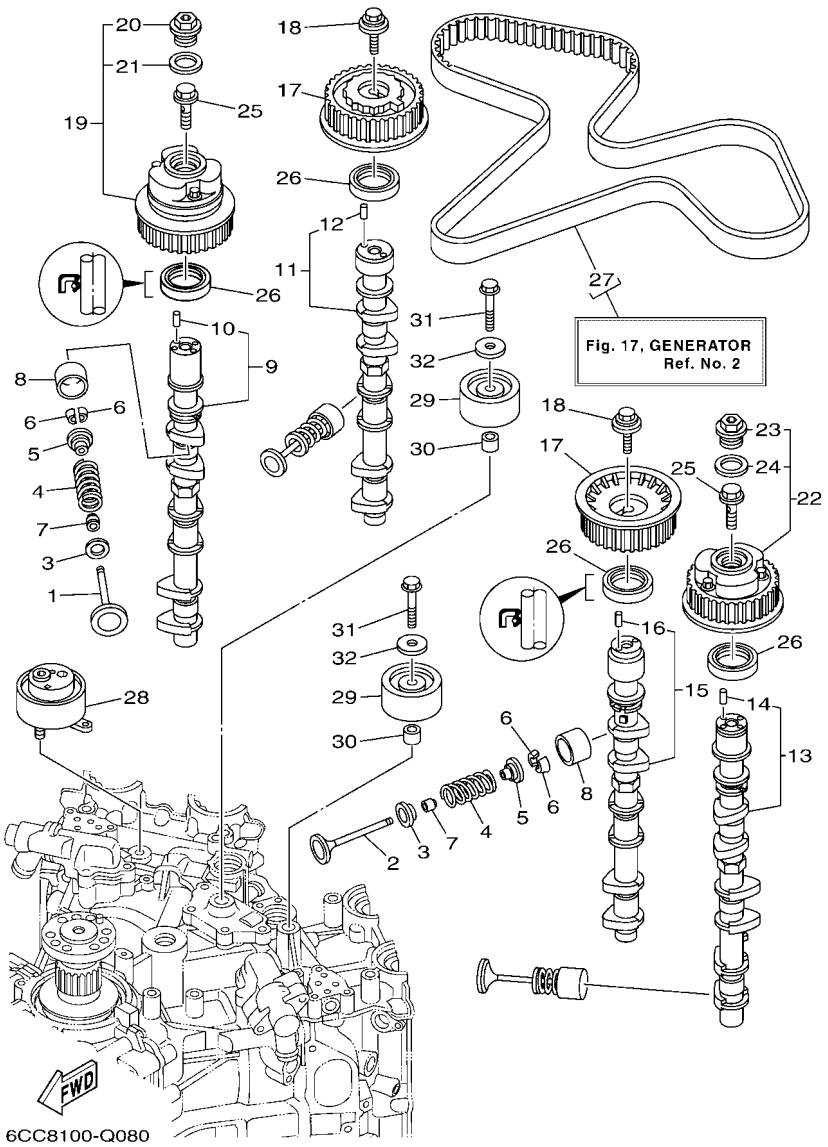

FIG. 8 VALVE

REF. NO.	PART NO.	DESCRIPTION	XCA	UCA				REMARKS
1	6CB–12111–00	VALVE, INTAKE	12	12				
2	6DA–12121–00	VALVE, EXHAUST	12	12				
3	K0F–A3743–00	SEAT, VALVE SPRING	24	24				
4	6CB–12113–00	SPRING, VALVE INNER	24	24				
5	K0F–A3741–00	RETAINER, VALVE SPRING	24	24				
6	K0F–A3742–00	LOCK, VALVE SPRING RETAINER	48	48				
7	51Y–12119–00	SEAL, VALVE STEM	24	24				
8	K0F–A3751–00	LIFTER, VALVE (3.000)	24	24				UR
	K0F–A3751–10	LIFTER, VALVE (3.025)	24	24				UR
	K0F–A3751–20	LIFTER, VALVE (3.050)	24	24				UR
	K0F–A3751–30	LIFTER, VALVE (3.075)	24	24				UR
	K0F–A3751–40	LIFTER, VALVE (3.100)	24	24				UR
	K0F–A3751–50	LIFTER, VALVE (3.122)	24	24				UR
	K0F–A3751–60	LIFTER, VALVE (3.142)	24	24				UR
	K0F–A3751–70	LIFTER, VALVE (3.162)	24	24				UR
	K0F–A3751–80	LIFTER, VALVE (3.182)	24	24				UR
	K0F–A3751–90	LIFTER, VALVE (3.202)	24	24				UR
	K0F–A3751–A0	LIFTER, VALVE (3.222)	24	24				UR
	K0F–A3751–B0	LIFTER, VALVE (3.242)	24	24				UR
	K0F–A3751–C0	LIFTER, VALVE (3.262)	24	24				UR
	K0F–A3751–D0	LIFTER, VALVE (3.282)	24	24				UR
	K0F–A3751–E0	LIFTER, VALVE (3.302)	24	24				UR
	K0F–A3751–F0	LIFTER, VALVE (3.322)	24	24				UR
	K0F–A3751–G0	LIFTER, VALVE (3.342)	24	24				UR
	K0F–A3751–H0	LIFTER, VALVE (3.362)	24	24				UR
	K0F–A3751–J0	LIFTER, VALVE (3.382)	24	24				UR
	K0F–A3751–K0	LIFTER, VALVE (3.402)	24	24				UR

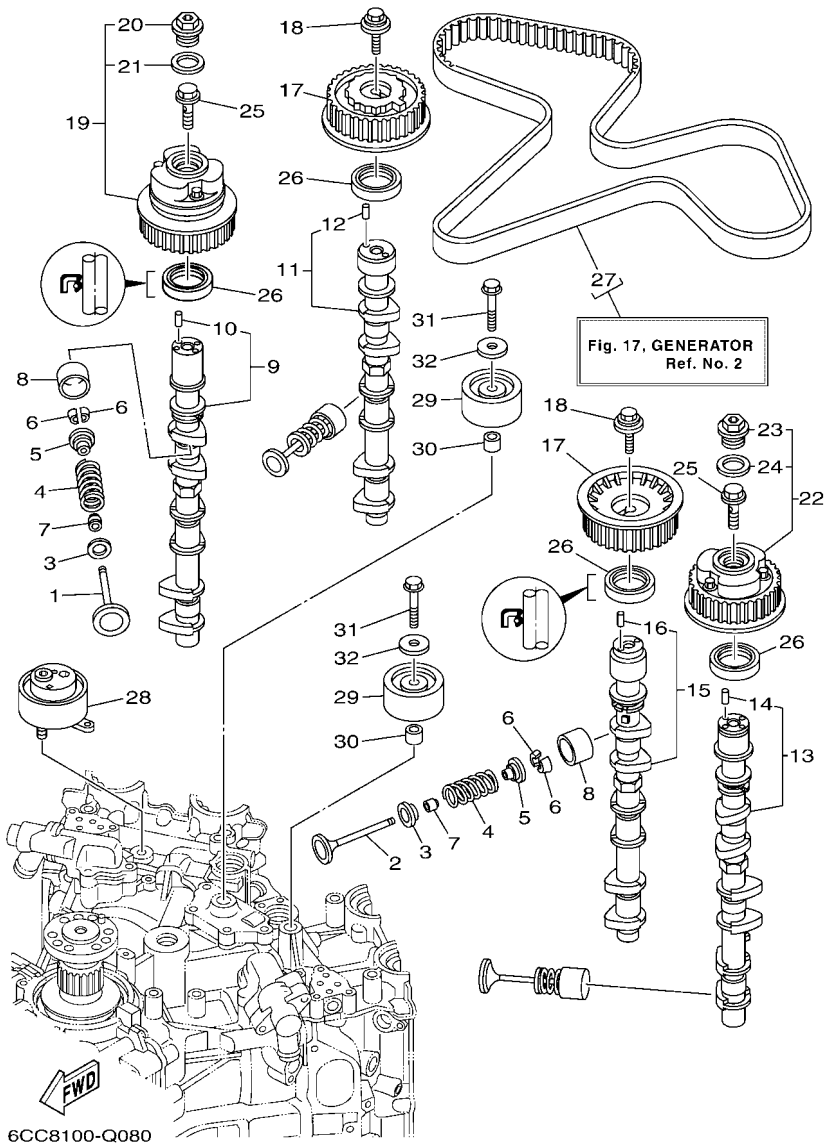

FIG. 8 VALVE

REF. NO.	PART NO.	DESCRIPTION	XCA	UCA				REMARKS
8	K0F–A3751–L0	LIFTER, VALVE (3.422)	24	24				UR
	K0F–A3751–M0	LIFTER, VALVE (3.442)	24	24				UR
	K0F–A3751–N0	LIFTER, VALVE (3.462)	24	24				UR
	K0F–A3751–P0	LIFTER, VALVE (3.482)	24	24				UR
	K0F–A3751–R0	LIFTER, VALVE (3.502)	24	24				UR
	K0F–A3751–S0	LIFTER, VALVE (3.522)	24	24				UR
	K0F–A3751–T0	LIFTER, VALVE (3.542)	24	24				UR
	K0F–A3753–00	LIFTER, VALVE (3.562)	24	24				UR
	K0F–A3753–10	LIFTER, VALVE (3.582)	24	24				UR
	K0F–A3753–20	LIFTER, VALVE (3.602)	24	24				UR
	K0F–A3753–30	LIFTER, VALVE (3.625)	24	24				UR
	K0F–A3753–40	LIFTER, VALVE (3.650)	24	24				UR
	K0F–A3753–50	LIFTER, VALVE (3.675)	24	24				UR
	K0F–A3753–60	LIFTER, VALVE (3.700)	24	24				UR
	K0F–A3753–70	LIFTER, VALVE (3.725)	24	24				UR
9	6CB–12171–00	CAMSHAFT 1	1	1				
10	93605–10108	.PIN, DOWEL	1	1				
11	6CB–12181–00	CAMSHAFT 2	1	1				
12	93605–10108	.PIN, DOWEL	1	1				
13	6CB–12172–00	CAMSHAFT 3	1	1				
14	93605–10108	.PIN, DOWEL	1	1				
15	6CB–12182–00	CAMSHAFT 4	1	1				
16	93605–10108	.PIN, DOWEL	1	1				
17	6CB–11567–00	GEAR, DRIVEN 2	2	2				
18	90119–10050	BOLT, WITH WASHER	2	2				
19	6CB–12645–01	PULLEY ASSY 1	1	1				
20	6P2–12623–00	.BOLT	1	1				

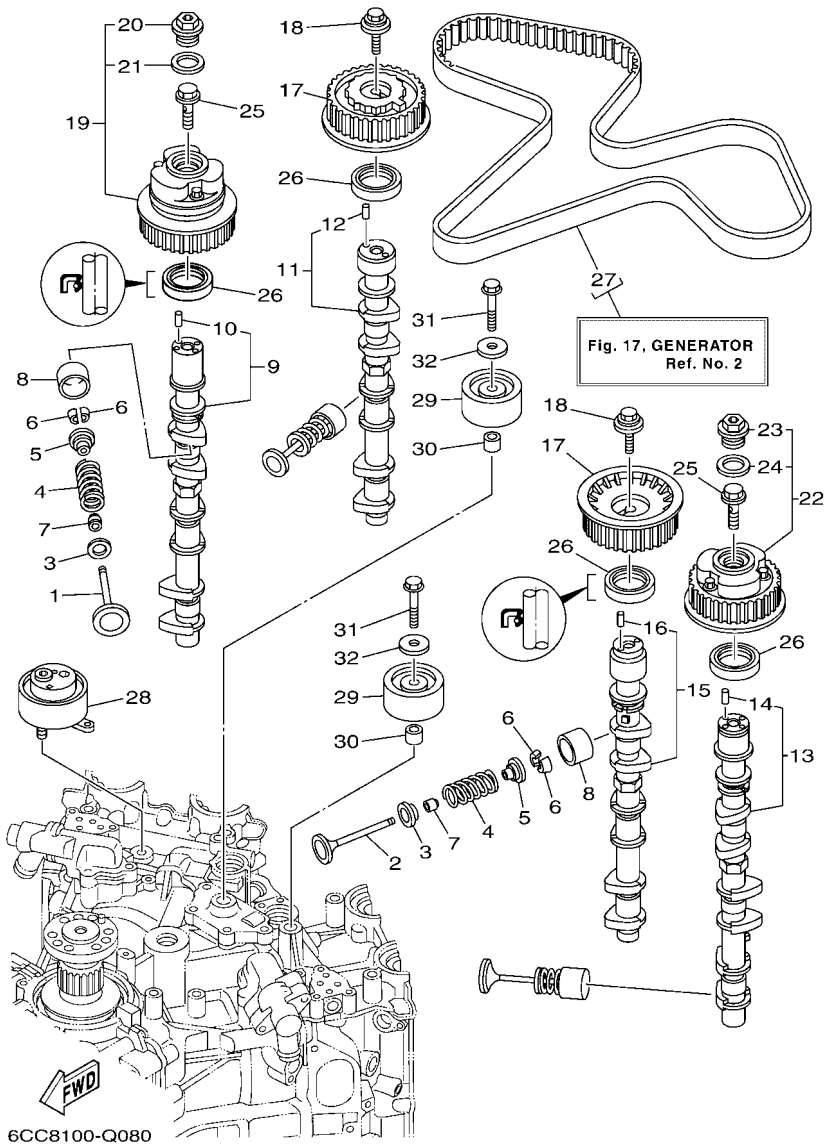

FIG. 8 VALVE

REF. NO.	PART NO.	DESCRIPTION	XCA	UCA				REMARKS
21	6P2–12663–00	.GASKET	1	1				
22	6CB–1264A–01	PULLEY ASSY 2	1	1				
23	6P2–12623–00	.BOLT	1	1				
24	6P2–12663–00	.GASKET	1	1				
25	6P2–12615–00	BOLT	2	2				
26	93102–38008	OIL SEAL	4	4				
27	6CB–W4624–00	BELT (WITH ROTOR BOLTS)	1	1				
28	6CB–11590–02	TENSIONER ASSY	1	1				
29	6CB–15512–00	GEAR, IDLER 1	2	2				
30	99530–14016	PIN, DOWEL	2	2				
31	90119–10M07	BOLT, WITH WASHER	2	2				
32	90201–10M01	WASHER, PLATE	2	2				

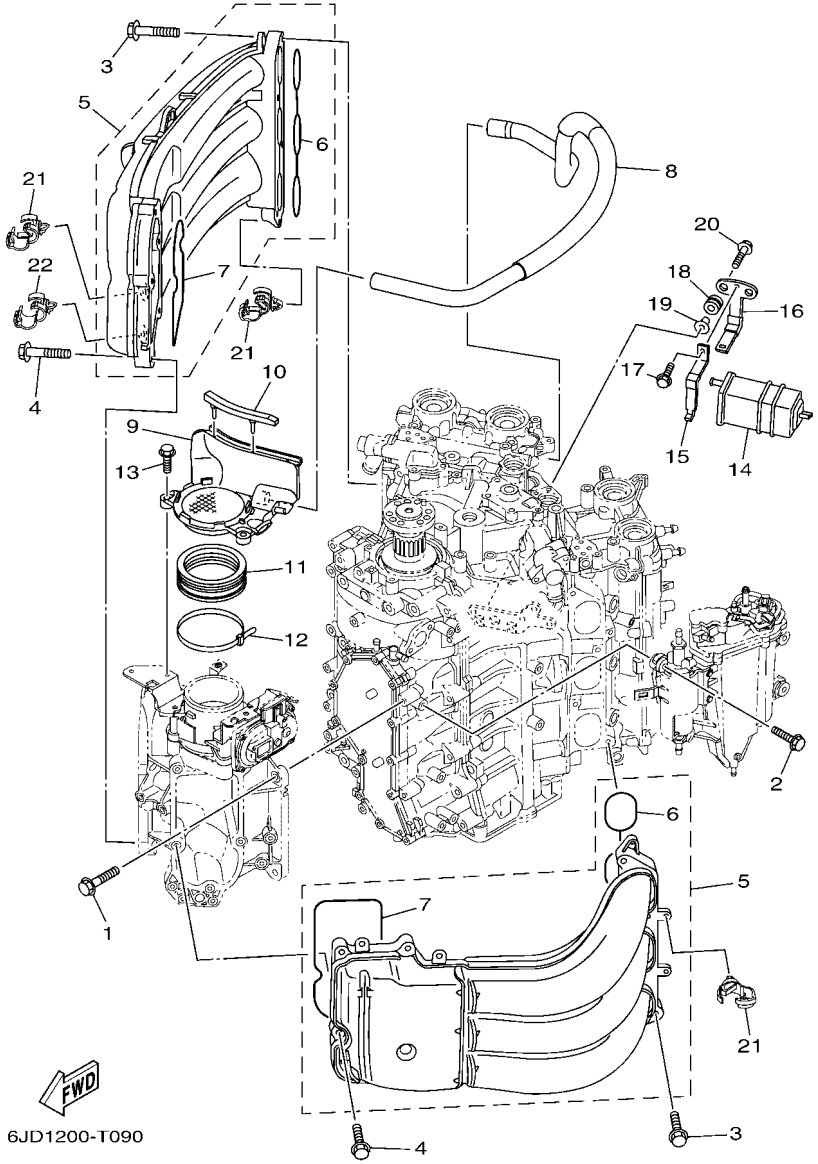

FIG. 9 INTAKE 1

REF. NO.	PART NO.	DESCRIPTION	XCA	UCA				REMARKS
1	95D75–08030	BOLT, FLANGE DEEP RECESS	4	4				
2	90119–06269	BOLT, WITH WASHER	4	4				
3	90119–08020	BOLT, WITH WASHER	8	8				
4	90105–06035	BOLT, FLANGE	10	10				
5	6CE–13641–00	MANIFOLD, INTAKE 1	2	2				
6	6CB–13645–00	.GASKET, MANIFOLD 1	1	1				
7	6CB–13646–00	.GASKET, MANIFOLD 2	1	1				
8	6CB–15373–01	PIPE, BREATHER	1	1				
9	6CB–14440–01	SILENCER ASSY, INTAKE	1	1				
10	6CB–85547–00	DAMPER	1	1				
11	6AW–1441J–00	PIPE, SILENCER	1	1				
12	90464–99004	CLAMP	1	1				
13	95D95–06020	BOLT, FLANGE DEEP RECESS	2	2				
14	69J–24170–00	CANISTER ASSY	1	1				
15	69J–2419A–01	HOLDER	1	1				
16	69J–2134X–00	BRACKET, CANISTER	1	1				
17	97E95–06516	BOLT, HEXAGON W/W DEEP RECESS	1	1				
18	90480–10M23	GROMMET	2	2				
19	90387–06289	COLLAR	2	2				
20	90119–06M17	BOLT, WITH WASHER	2	2				
21	90464–13249	CLAMP	8	8				
22	90464–20181	CLAMP	1	1				

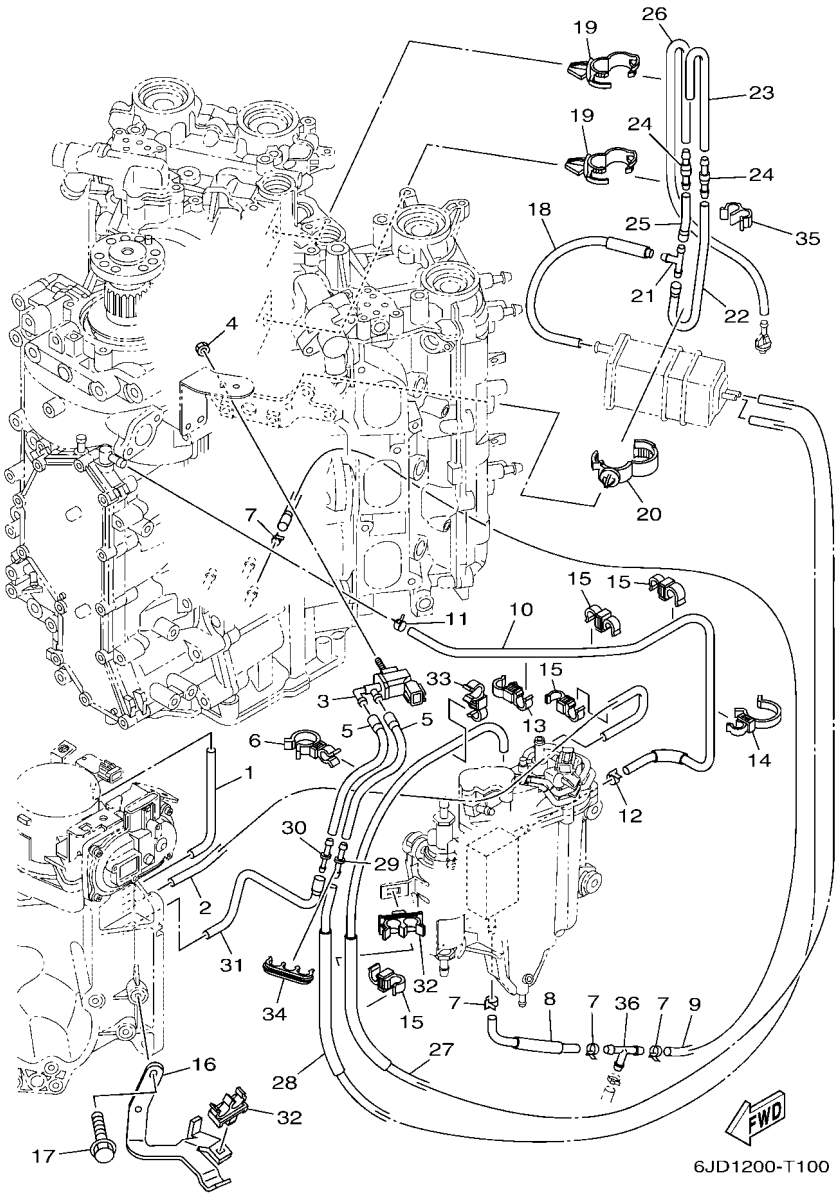

FIG. 10 INTAKE 2

REF. NO.	PART NO.	DESCRIPTION	XCA	UCA				REMARKS
1	6CB–13533–00	HOSE, VACUUM SENSING 4	1	1				
2	6CB–13532–10	HOSE, VACUUM SENSING 3	1	1				
3	6C5–86120–00	SOLENOID VALVE ASSY	1	1				
4	95380–06600	NUT, HEXAGON	1	1				
5	6CB–2416A–00	HOSE	2	2				
6	90464–23001	CLAMP	2	2				
7	90465–11M10	CLAMP	4	4				
8	6CE–12482–10	PIPE 2	1	1				
9	90445–097F7	HOSE (L780)	1	1				
10	6CB–12484–00	PIPE 4	1	1				
11	90467–090A0	CLIP	1	1				
12	90465–11M10	CLAMP	1	1				
13	90464–12010	CLAMP	1	1				
14	90464–26002	CLAMP	1	1				
15	90464–09013	CLAMP	4	4				
16	6CB–13782–00	STAY	1	1				
17	95D95–06016	BOLT, FLANGE DEEP RECESS	2	2				
18	6CB–13545–00	HOSE 1	1	1				
19	90464–20181	CLAMP	2	2				
20	90464–07209	CLAMP	1	1				
21	688–24378–00	PIPE, JOINT 3	1	1				
22	6CB–13546–01	HOSE 2	1	1				
23	6CB–13547–00	HOSE 3	1	1				
24	6E5–21744–00	BREATHER	2	2				
25	6CB–13548–00	HOSE, AIR 4	1	1				
26	6CB–12483–01	PIPE 3	1	1				
27	6CB–1475A–00	PIPE 1	1	1				

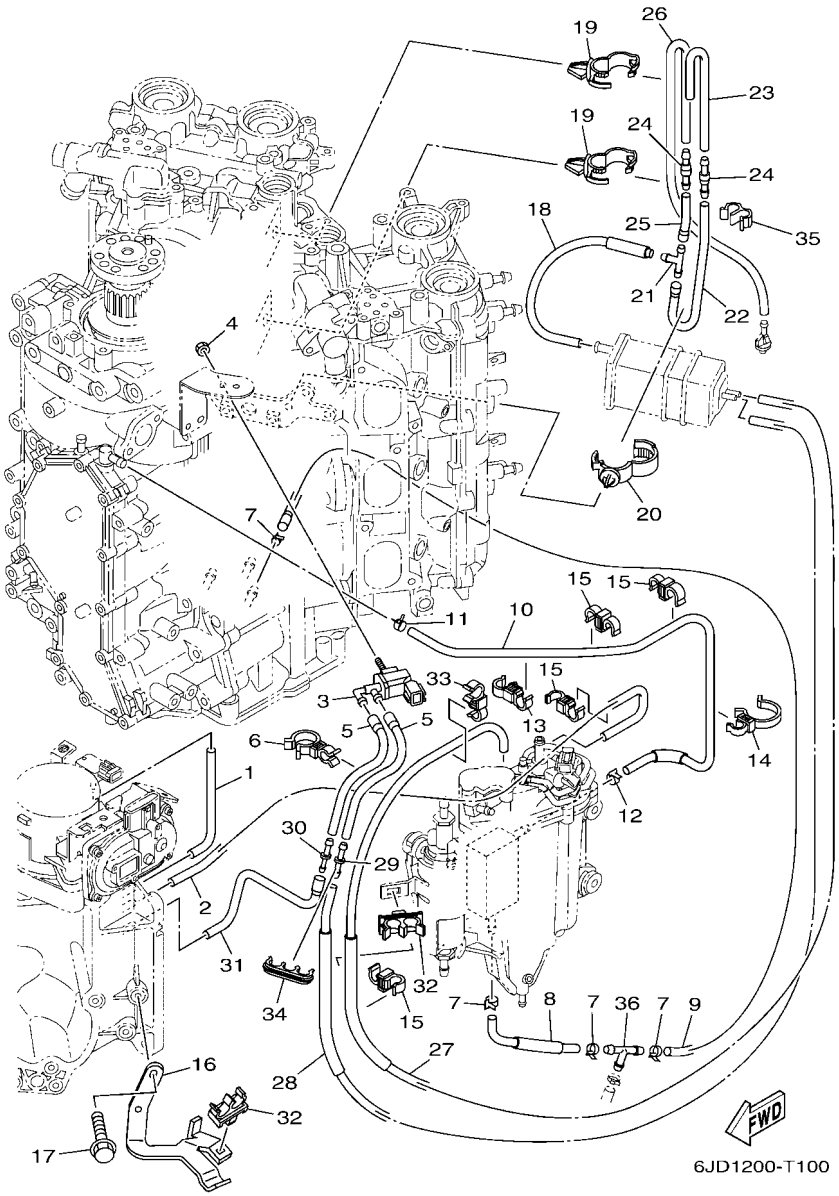

FIG. 10 INTAKE 2

REF. NO.	PART NO.	DESCRIPTION	XCA	UCA				REMARKS
28	6CB–1475F–00	PIPE 3	1	1				
29	6G8–24376–00	PIPE, JOINT 1	1	1				
30	6EK–14989–00	ORIFICE, AIR VENT	1	1				
31	6CB–1475G–10	PIPE 4	1	1				
32	90464–11012	CLAMP	2	2				
33	90464–12010	CLAMP	1	1				
34	90464–10011	CLAMP	1	1				
35	90464–07M20	CLAMP	1	1				
36	688–24378–00	PIPE, JOINT 3	1	1				

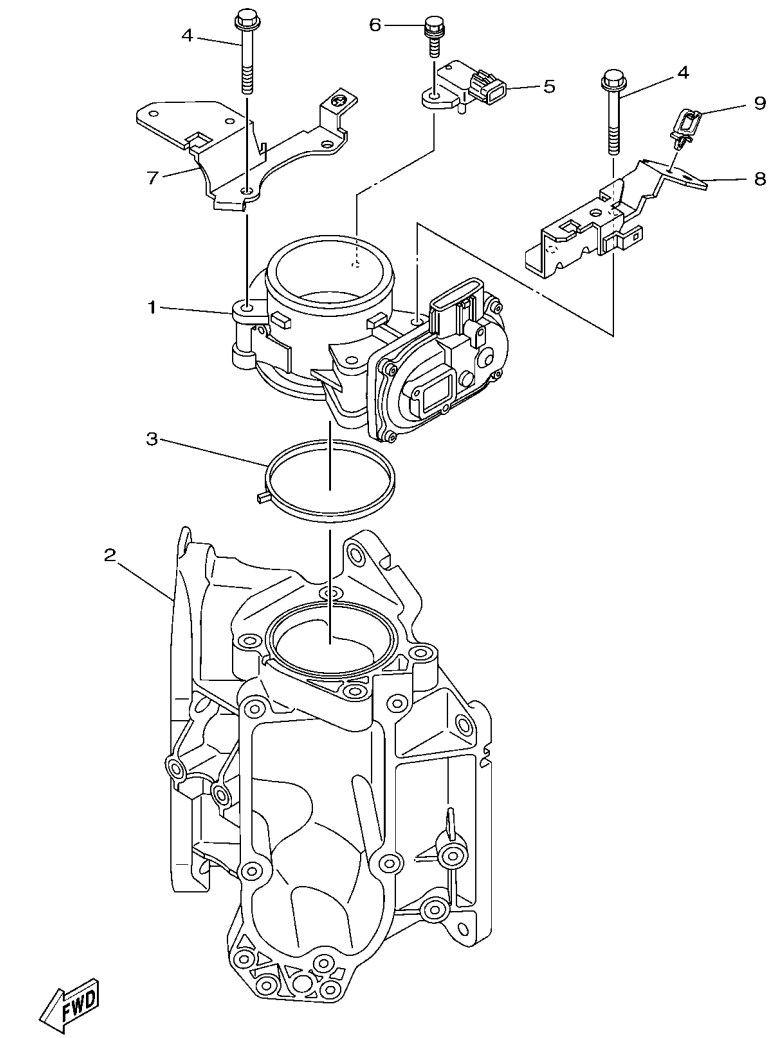

6JD1200-T110

FIG. 11 THROTTLE BODY ASSY 1

REF. NO.	PART NO.	DESCRIPTION	XCA	UCA				REMARKS
1	6CB–13751–10	BODY, THROTTLE 1	1	1				
2	6CB–13711–00	MIXING BODY	1	1				
3	6CB–13556–00	GASKET, MANIFOLD	1	1				
4	95D75–08060	BOLT, FLANGE DEEP RECESS	4	4				
5	6P2–82380–00	SENSOR, PRESSURE	1	1				
6	97E75–06620	BOLT, HEXAGON W/W DEEP RECESS	1	1				
7	6CB–13898–20	HOLDER	1	1				
8	6CB–13898–11	HOLDER	1	1				
9	90464–08004	CLAMP	1	1				

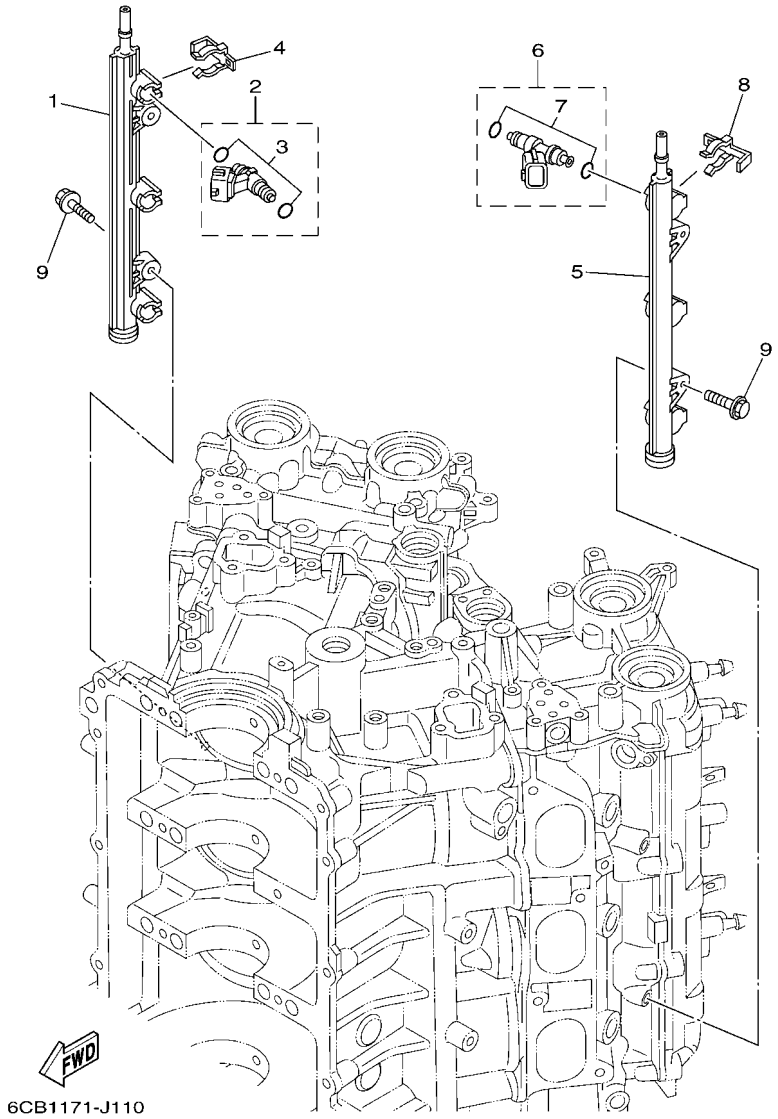

FIG. 12 THROTTLE BODY ASSY 2

REF. NO.	PART NO.	DESCRIPTION	XCA	UCA				REMARKS
1	6CB–13161–10	PIPE, DELIVERY 1	1	1				
2	6AW–13761–00	INJECTOR	3	3				
3	6AW–1410B–00	.PACKING KIT	1	1				
4	6CB–13577–00	CLIP	3	3				
5	6CB–13171–10	PIPE, DELIVERY 2	1	1				
6	6AW–13761–00	INJECTOR	3	3				
7	6AW–1410B–00	.PACKING KIT	1	1				
8	6CB–13577–00	CLIP	3	3				
9	90105–06M08	BOLT, FLANGE	4	4				

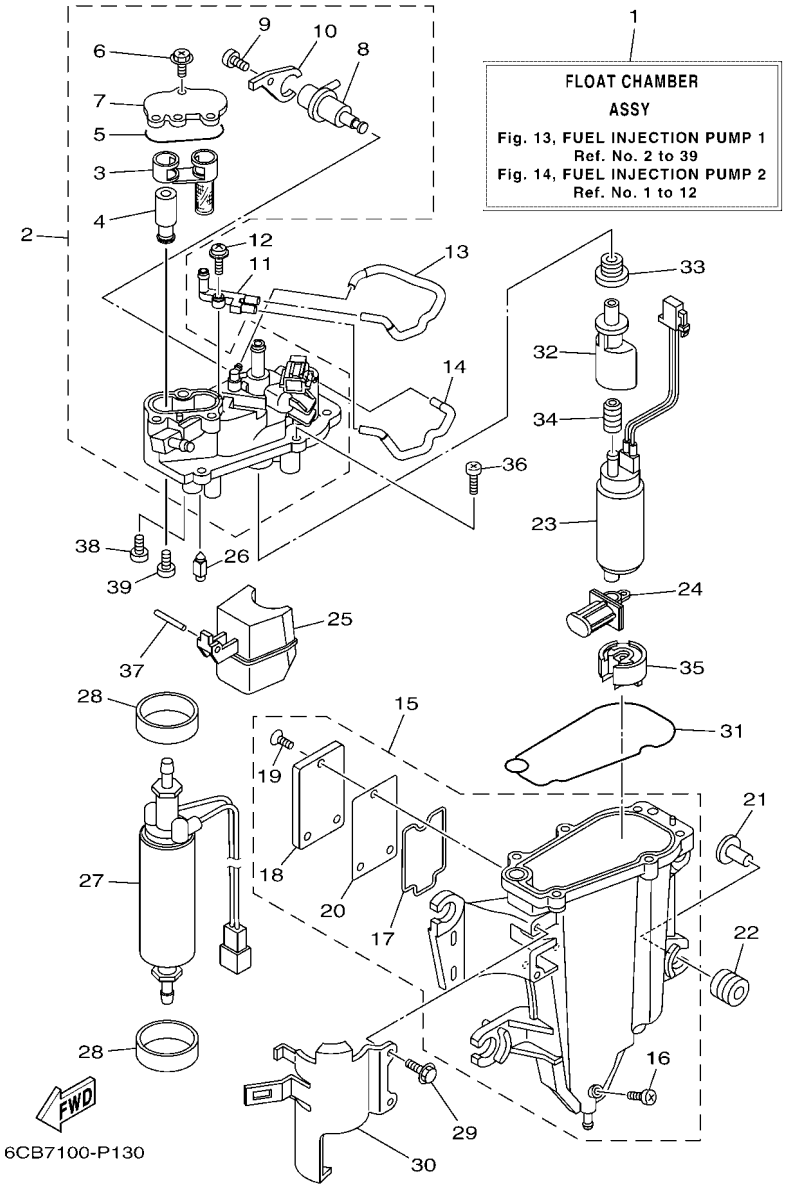

FIG. 13 FUEL INJECTION PUMP 1

REF. NO.	PART NO.	DESCRIPTION	XCA	UCA				REMARKS
1	6CB–14180–12	FLOAT CHAMBER ASSY	1	1				
2	6CB–14182–02	COVER, FLOAT CHAMBER	1	1				
3	6CB–24501–01	.FILTER, FUEL	1	1				
4	6CB–24460–00	.RELIEF VALVE ASSY	1	1				
5	6CB–13016–00	.O-RING	1	1				
6	6CB–14216–00	.SCREW	3	3				
7	6CB–24217–00	.COVER	1	1				
8	6CB–13906–01	.REGULATOR, PRESSURE	1	1				
9	6CB–14564–00	.SCREW	1	1				
10	6CB–14146–00	.PLATE	1	1				
11	68V–24379–10	PIPE, JOINT 4	1	1				
12	68V–14216–00	SCREW	1	1				
13	6CB–1475H–00	PIPE 5	1	1				
14	6CB–1475J–00	PIPE 6	1	1				
15	6CB–14181–01	BODY, FLOAT CHAMBER 1	1	1				
16	6P2–14191–00	.PLUG, DRAIN	1	1				
17	6CB–14239–00	.SEAL	1	1				
18	6CB–24452–10	.COVER	1	1				
19	6CB–14429–01	.SCREW	3	3				
20	6CB–24482–00	.GASKET 1	1	1				
21	63P–13716–00	COLLAR	4	4				
22	6CB–13593–00	DAMPER	4	4				
23	6CB–13907–11	FUEL PUMP COMP.	1	1				
24	63P–13915–00	FILTER	1	1				
25	6CB–14985–00	FLOAT	1	1				
26	6CB–14546–00	VALVE, NEEDLE	1	1				
27	6CB–24410–01	FUEL PUMP ASSY	1	1				

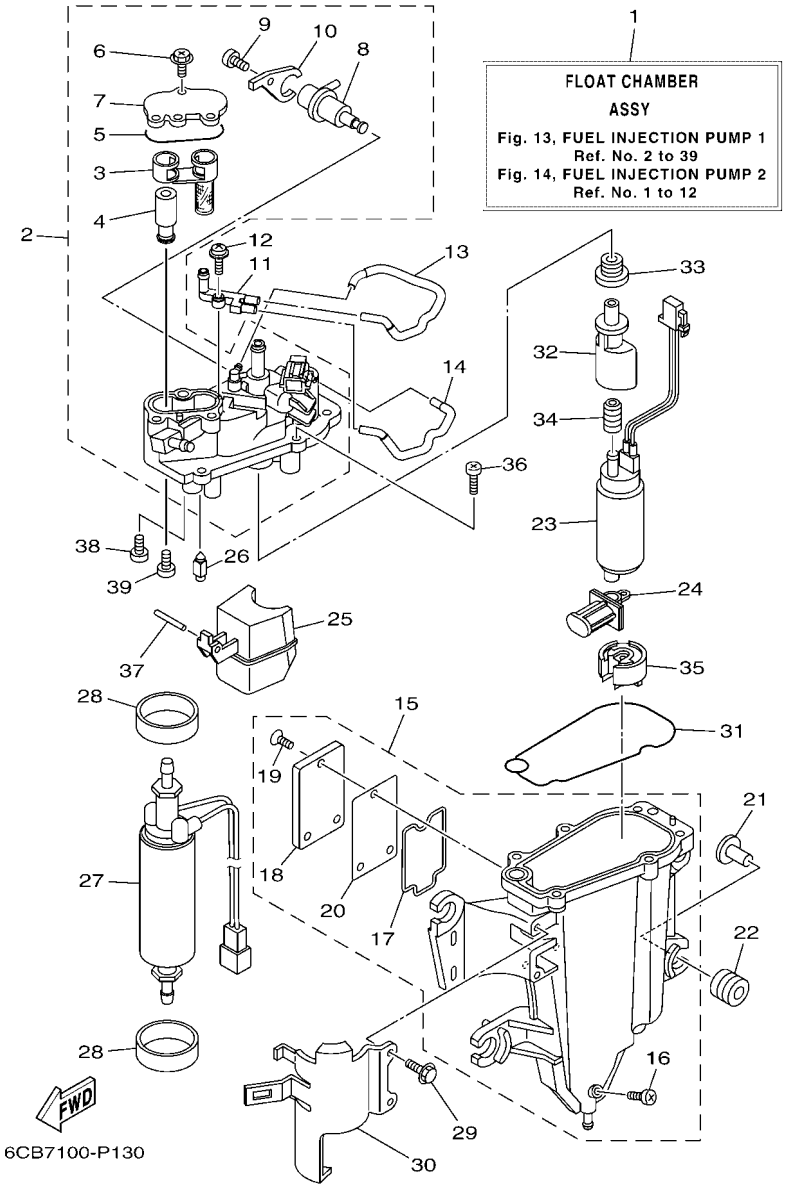

FIG. 13 FUEL INJECTION PUMP 1

REF. NO.	PART NO.	DESCRIPTION	XCA	UCA				REMARKS
28	6CB–24492–00	BUSH, FUEL PUMP	2	2				
29	6CB–24592–00	BOLT	2	2				
30	6CB–24491–00	BRACKET, FUEL PUMP	1	1				
31	6CB–14984–00	GASKET, FLOAT CHAMBER	1	1				
32	6AW–13132–00	JOINT	1	1				
33	6CB–1447B–00	BUSH 1	1	1				
34	6AW–13781–00	DAMPER, PUMP	1	1				
35	6AW–13784–00	COVER, PUMP	1	1				
36	63P–14567–00	SCREW	6	6				
37	6P2–14386–00	PIN, FLOAT	1	1				
38	4SV–24453–00	SCREW	1	1				
39	98507–04008	SCREW, PAN HEAD	1	1				

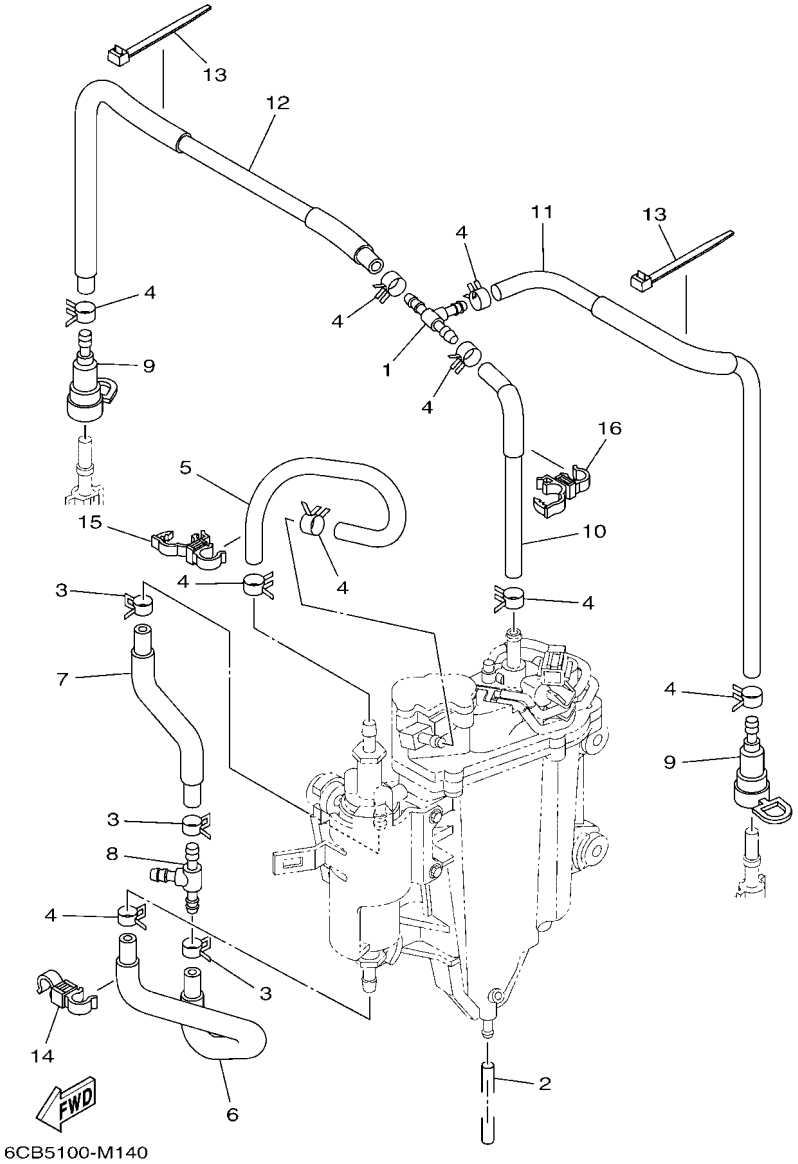

FIG. 14 FUEL INJECTION PUMP 2

REF. NO.	PART NO.	DESCRIPTION	XCA	UCA				REMARKS
1	6CB–24461–00	PIPE, JOINT	1	1				
2	6P2–14149–00	PIPE	1	1				
3	69J–14137–00	CLIP	3	3				
4	68V–13577–00	CLIP	9	9				
5	6CB–24324–00	PIPE 13	1	1				
6	6CB–24317–00	PIPE 7	1	1				
7	6CB–24323–00	PIPE 12	1	1				
8	6E5–24378–00	PIPE, JOINT 3	1	1				
9	60E–24300–01	FUEL PIPE JOINT	2	2				
10	6CB–13971–01	PIPE, FUEL 1	1	1				
11	6CB–13974–01	PIPE, FUEL 4	1	1				
12	6CB–13972–00	PIPE, FUEL 2	1	1				
13	90465–14M66	CLAMP	2	2				
14	90464–12009	CLAMP	1	1				
15	90464–12012	CLAMP	1	1				
16	90464–12012	CLAMP	1	1				

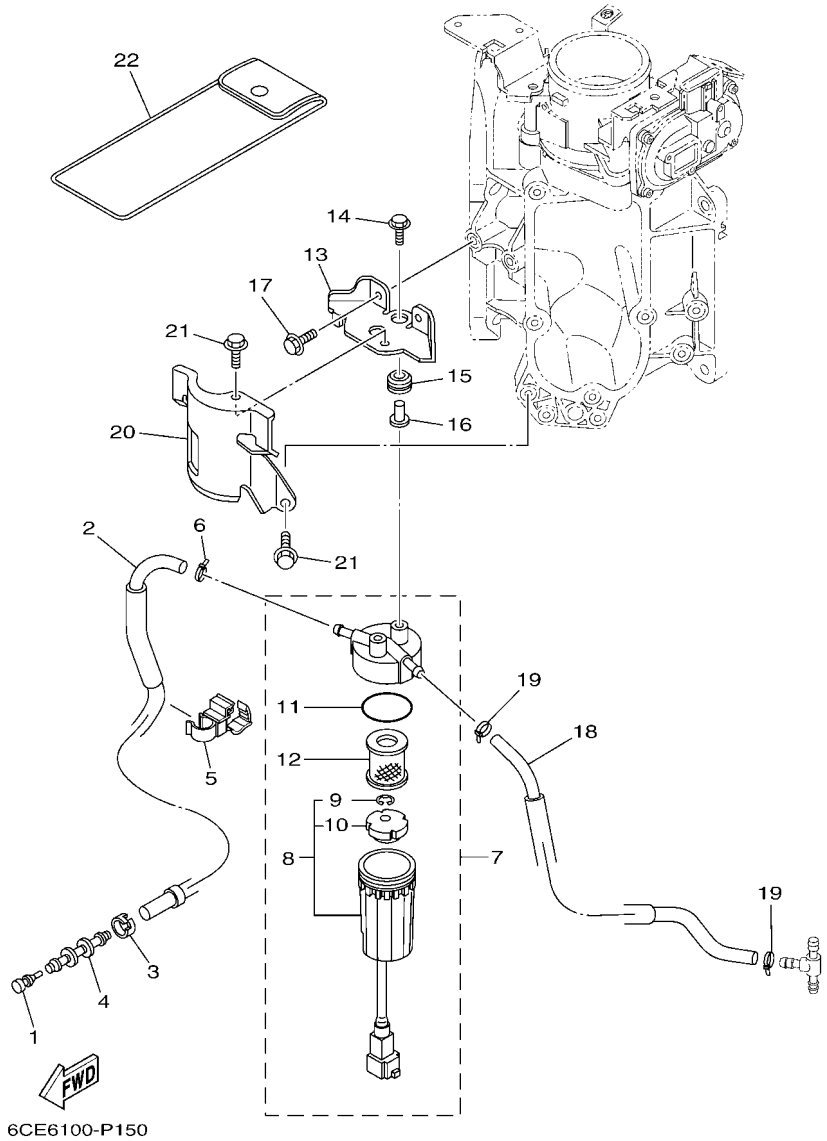

FIG. 15 FUEL 1

REF. NO.	PART NO.	DESCRIPTION	XCA	UCA				REMARKS
1	689–85547–00	DAMPER	1	1				
2	6CB–24314–11	PIPE 4	1	1				
3	6E5–24351–51	BAND 1	1	1				
4	6AW–24377–01	PIPE, JOINT 2	1	1				
5	90464–12012	CLAMP	1	1				
6	90465–11M10	CLAMP	1	1				
7	6P3–24560–22	FILTER ASSY	1	1				
8	6P3–24562–21	.CUP, FILTER	1	1				
9	6P3–24519–00	..CLIP	1	1				
10	6P3–24469–00	..FLOAT, WATER LEVEL	1	1				
11	6P3–24564–00	.GASKET	1	1				
12	6P3–24563–01	.ELEMENT, FILTER	1	1				
13	6CB–24566–00	BRACKET, FILTER	1	1				
14	90119–06M17	BOLT, WITH WASHER	2	2				
15	90480–10M23	GROMMET	2	2				
16	90387–06289	COLLAR	2	2				
17	95D95–06016	BOLT, FLANGE DEEP RECESS	2	2				
18	6CB–24313–10	PIPE 3	1	1				
19	90465–11M10	CLAMP	2	2				
20	6CB–24596–01	COVER	1	1				
21	95D95–06014	BOLT, FLANGE DEEP RECESS	2	2				
22	69J–28100–02	TOOL KIT	1	1				AP

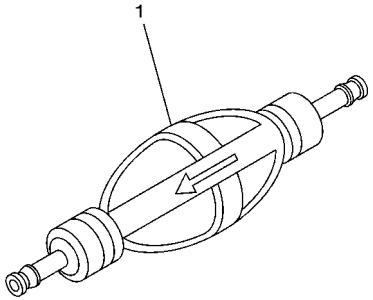

68V9110-J110

FIG. 16 FUEL 2

REF. NO.	PART NO.	DESCRIPTION	XCA	UCA				REMARKS
1	6AW–24360–01	PRIMER PUMP ASSY	1	1				AP

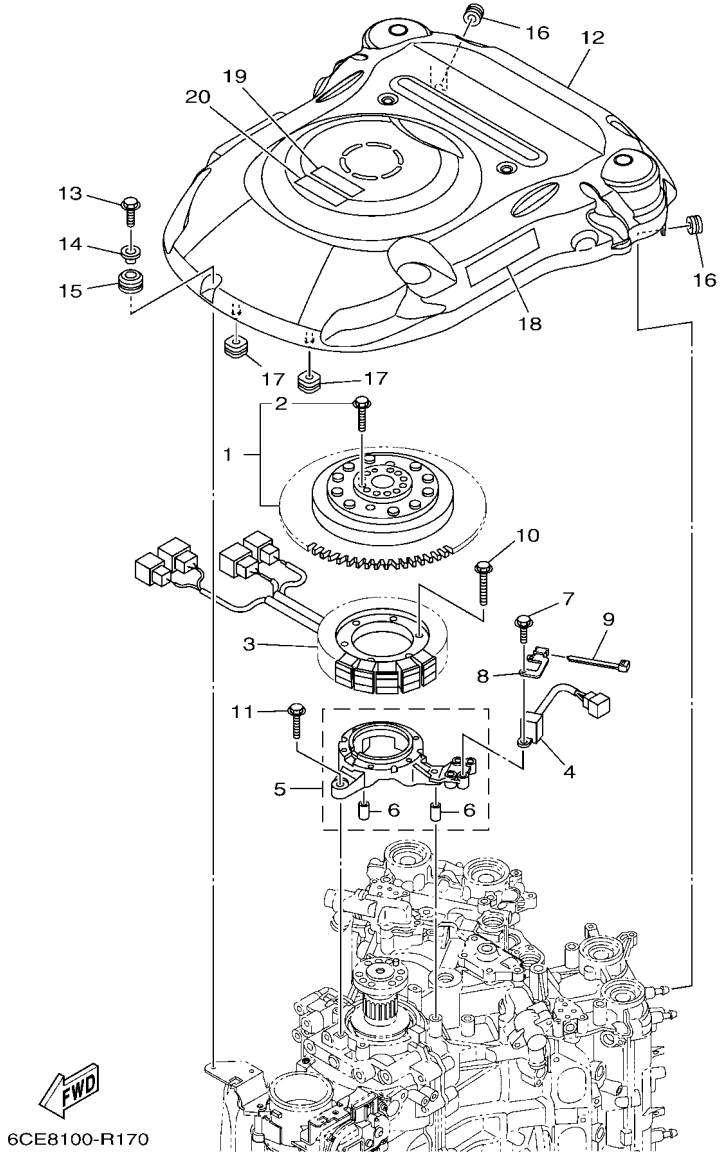

FIG. 17 GENERATOR

REF. NO.	PART NO.	DESCRIPTION	XCA	UCA				REMARKS
1	6CE–W8145–01	ROTOR ASSY WITH BOLTS	1	1				
2	6EK–W9010–00	.BOLT SET	1	1				
3	6CE–81410–00	STATOR ASSY	1	1				
4	6CB–85580–00	COIL, PULSER	1	1				
5	6CB–85561–00	BASE, MAGNETO	1	1				
6	99530–08012	.PIN, DOWEL	2	2				
7	97595–05520	BOLT, WITH WASHER	2	2				
8	6CE–85592–00	STAY, PULSER	1	1				
9	90465–11M10	CLAMP	1	1				
10	95022–06035	BOLT, FLANGE	6	6				
11	95D95–06030	BOLT, FLANGE DEEP RECESS	4	4				
12	6CE–81337–01	COVER, FLYWHEEL	1	1				
13	95D95–06020	BOLT, FLANGE DEEP RECESS	1	1				
14	90387–06285	COLLAR	1	1				
15	90480–15M31	GROMMET	1	1				
16	90480–12314	GROMMET	2	2				
17	6CB–85516–00	SPACER	2	2				
18	6CE–13437–61	MARK, CAUTION	1	1				
19	6EE–81994–40	LABEL, SAFETY	1	1				
20	6EE–81994–50	LABEL, SAFETY	1	1				

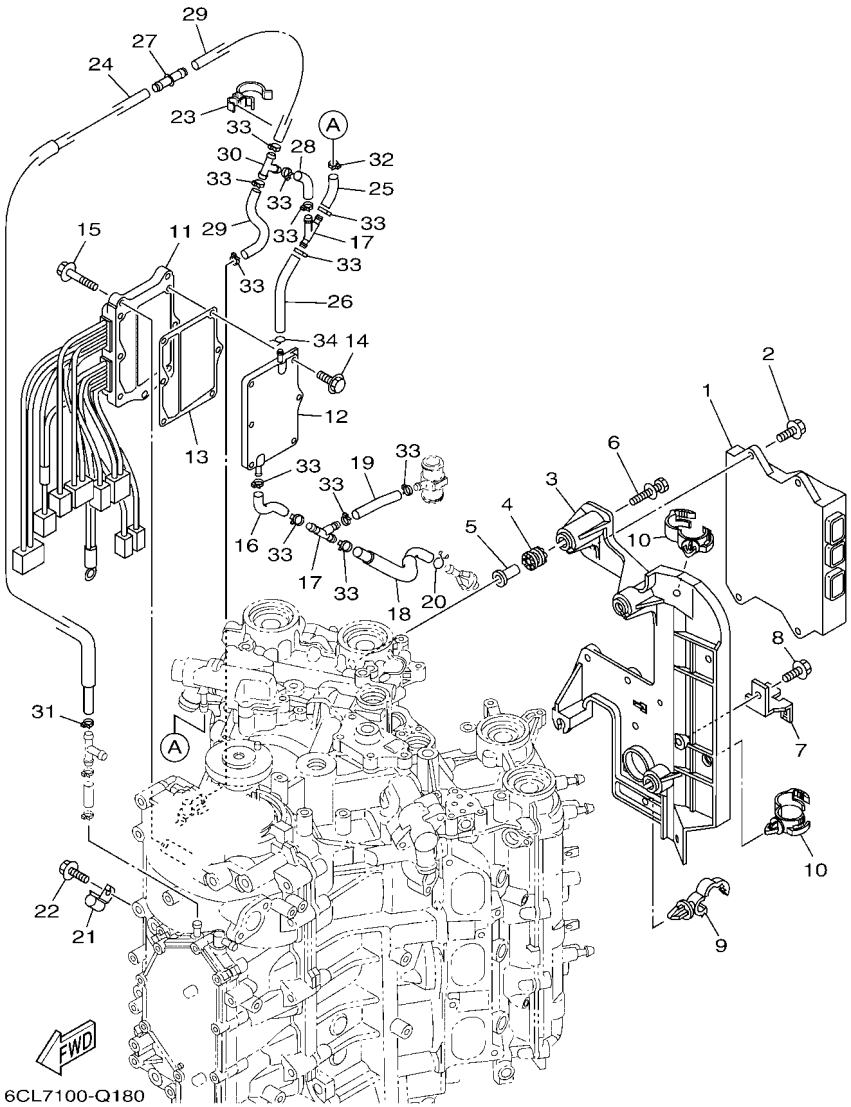

FIG. 18 ELECTRICAL 1

REF. NO.	PART NO.	DESCRIPTION	XCA	UCA				REMARKS
1	6CE–8591A–13	ENGINE CONTROL UNIT ASSY	1	1				
2	95D95–06020	BOLT, FLANGE DEEP RECESS	4	4				
3	6CB–82316–01	BRACKET, IGNITION COIL	1	1				
4	64J–85516–00	SPACER	4	4				
5	69M–42758–01	COLLAR	4	4				
6	90119–06293	BOLT, WITH WASHER	4	4				
7	6BR–81845–00	PLATE	1	1				
8	95D95–06012	BOLT, FLANGE DEEP RECESS	1	1				
9	90464–13249	CLAMP	1	1				
10	90464–20181	CLAMP	2	2				
11	6CE–81960–10	RECTIFIER & REGULATOR ASSY	1	1				
12	6CE–81972–00–9S	COVER, RECTIFIER	1	1				
13	6CE–81975–00	PLATE, RECTIFIER FITTING	1	1				
14	90119–06MA3	BOLT, WITH WASHER	6	6				
15	95D95–06025	BOLT, FLANGE DEEP RECESS	3	3				
16	6CE–1248A–00	PIPE 8	1	1				
17	6CE–24377–00	PIPE, JOINT 2	2	2				
18	6CE–12483–00	PIPE 3	1	1				
19	90445–107A5	HOSE (L30)	1	1				
20	90467–08M18	CLIP	1	1				
21	90462–06013	CLAMP	1	1				
22	95023–06012	BOLT	1	1				
23	90464–26002	CLAMP	1	1				
24	6CE–12481–10	PIPE 1	1	1				
25	6CE–14872–00	PIPE 2	1	1				
26	6CE–12485–00	PIPE 5	1	1				
27	6CE–24376–01	PIPE, JOINT 1	1	1				

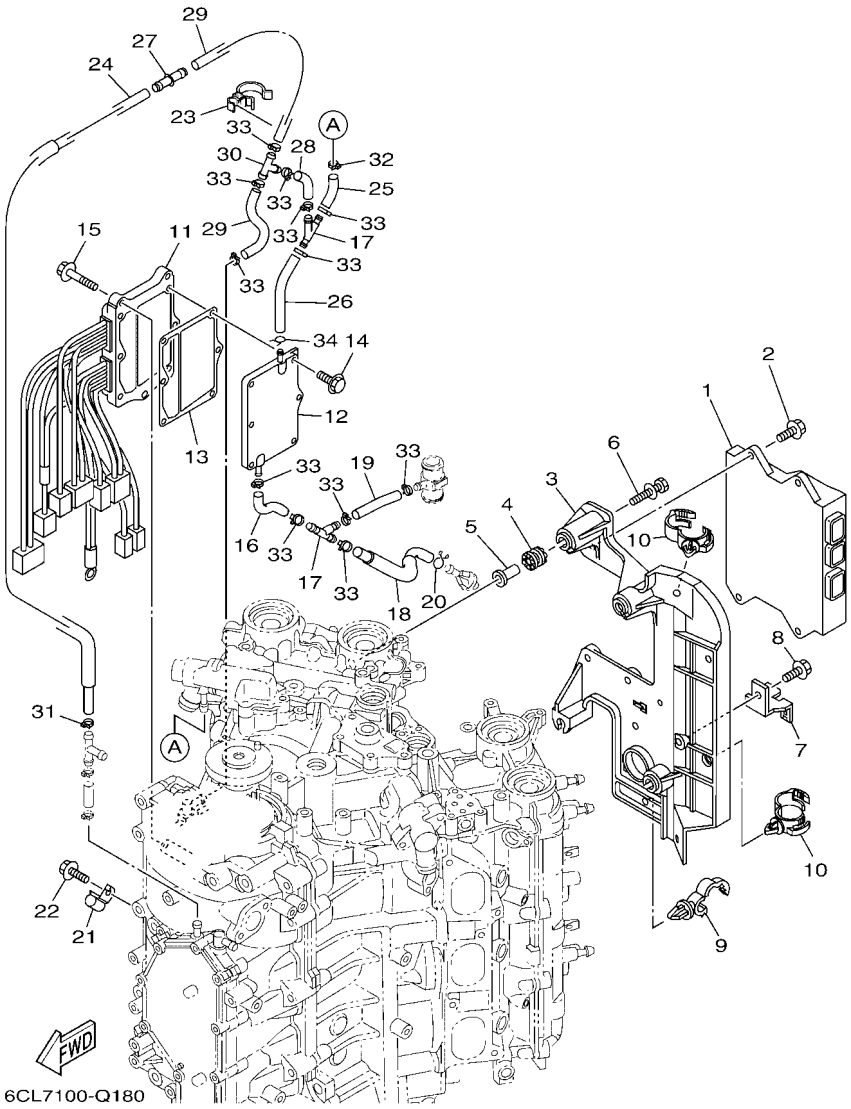

FIG. 18 ELECTRICAL 1

REF. NO.	PART NO.	DESCRIPTION	XCA	UCA				REMARKS
28	6CE–14872–00	PIPE 2	1	1				
29	90445–09068	HOSE (L110)	2	2				
30	688–24378–00	PIPE, JOINT 3	1	1				
31	90465–11M10	CLAMP	1	1				
32	90465–11M10	CLAMP	1	1				
33	90465–11M10	CLAMP	12	12				
34	90467–08004	CLIP	1	1				

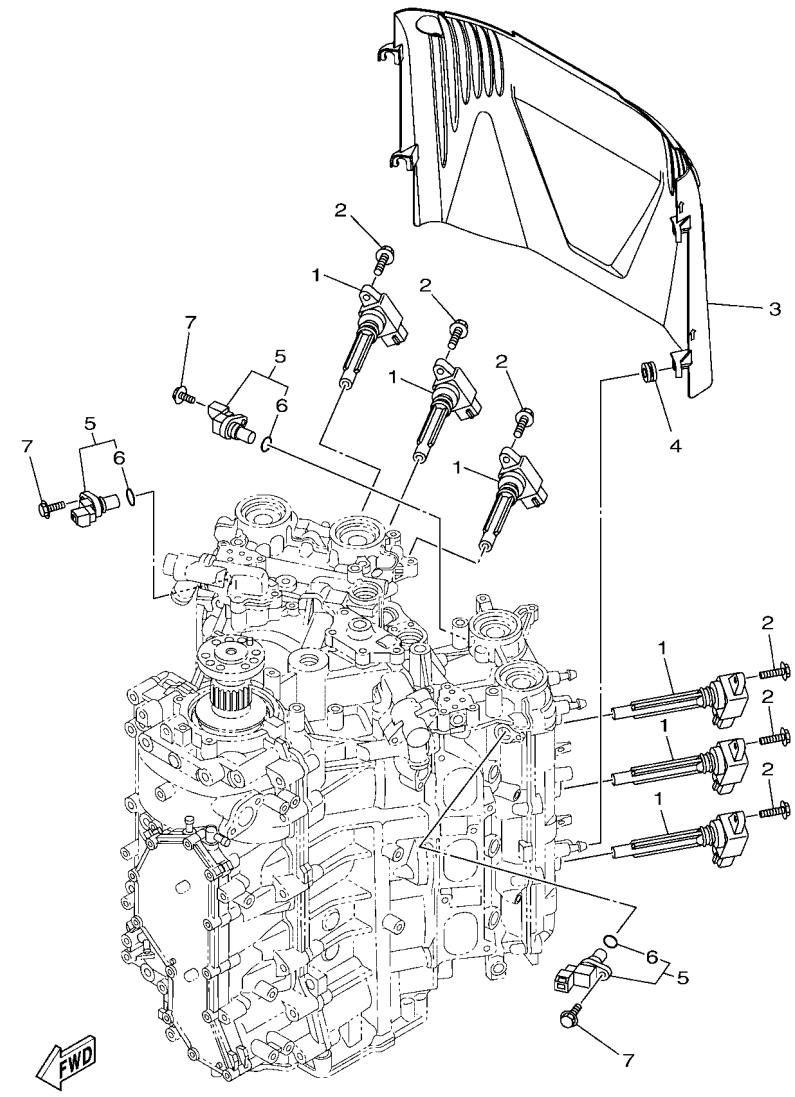

6CE8100-R190

FIG. 19 ELECTRICAL 2

REF. NO.	PART NO.	DESCRIPTION	XCA	UCA				REMARKS
1	6CB–82310–00	IGNITION COIL ASSY	6	6				
2	95D95–06025	BOLT, FLANGE DEEP RECESS	6	6				
3	6CB–82314–00	COVER, IGNITION COIL	1	1				
4	90480–12314	GROMMET	4	4				
5	6P2–85896–00	SENSOR, CAM POSITION	3	3				
6	6P2–85075–00	.O-RING	1	1				
7	97E95–06520	BOLT, HEXAGON W/W DEEP RECESS	3	3				

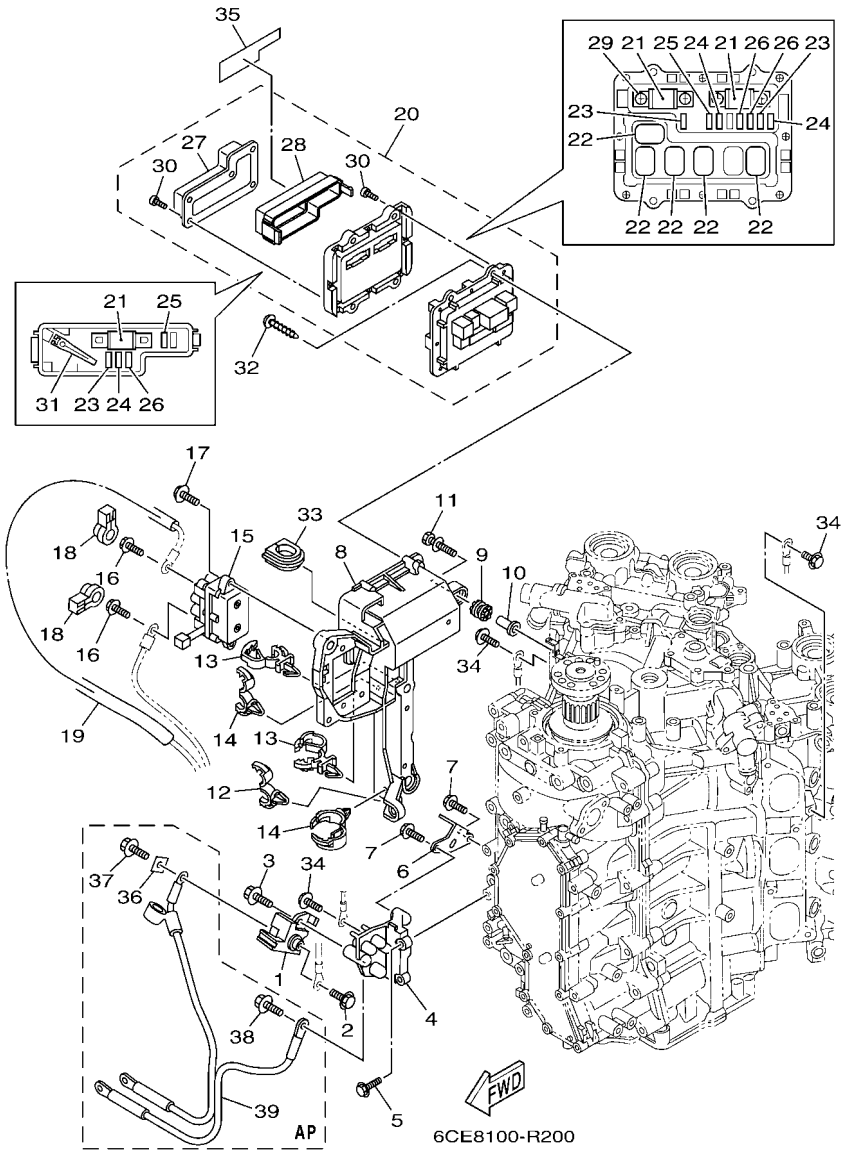

FIG. 20 ELECTRICAL 3

REF. NO.	PART NO.	DESCRIPTION	XCA	UCA				REMARKS
1	6P2–81925–01	TERMINAL	1	1				
2	95D95–08016	BOLT, FLANGE DEEP RECESS	1	1				
3	95814–08020	BOLT, FLANGE	1	1				
4	6CB–81929–00	BRACKET, TERMINAL	1	1				
5	95D95–06020	BOLT, FLANGE DEEP RECESS	2	2				
6	6CE–82588–00	PLATE	1	1				
7	95D95–06016	BOLT, FLANGE DEEP RECESS	2	2				
8	6CB–81948–02	BRACKET	1	1				
9	64J–85516–00	SPACER	5	5				
10	69M–42758–01	COLLAR	5	5				
11	90119–06293	BOLT, WITH WASHER	5	5				
12	90464–13249	CLAMP	1	1				
13	90464–12183	CLAMP	2	2				
14	90464–20181	CLAMP	2	2				
15	6AW–81950–00	RELAY ASSY	1	1				
16	97E95–06610	BOLT, HEXAGON W/W DEEP RECESS	2	2				
17	97513–06520	BOLT, WITH WASHER	2	2				
18	6P2–8183X–00	CAP, TERMINAL	2	2				
19	90446–15003	HOSE (L100)	1	1				
20	6CE–82170–11	FUSE BOX ASSY	1	1				
21	6CE–82151–00	.FUSE (100A)	3	3				
22	6AW–8195A–00	.RELAY ASSY	5	5				
23	67F–82151–40	.FUSE (10A)	3	3				
24	67F–82151–50	.FUSE (15A)	3	3				
25	67F–82151–00	.FUSE (20A)	2	2				
26	67F–82151–10	.FUSE (30A)	3	3				
27	6CB–81639–10	.COVER	1	1				

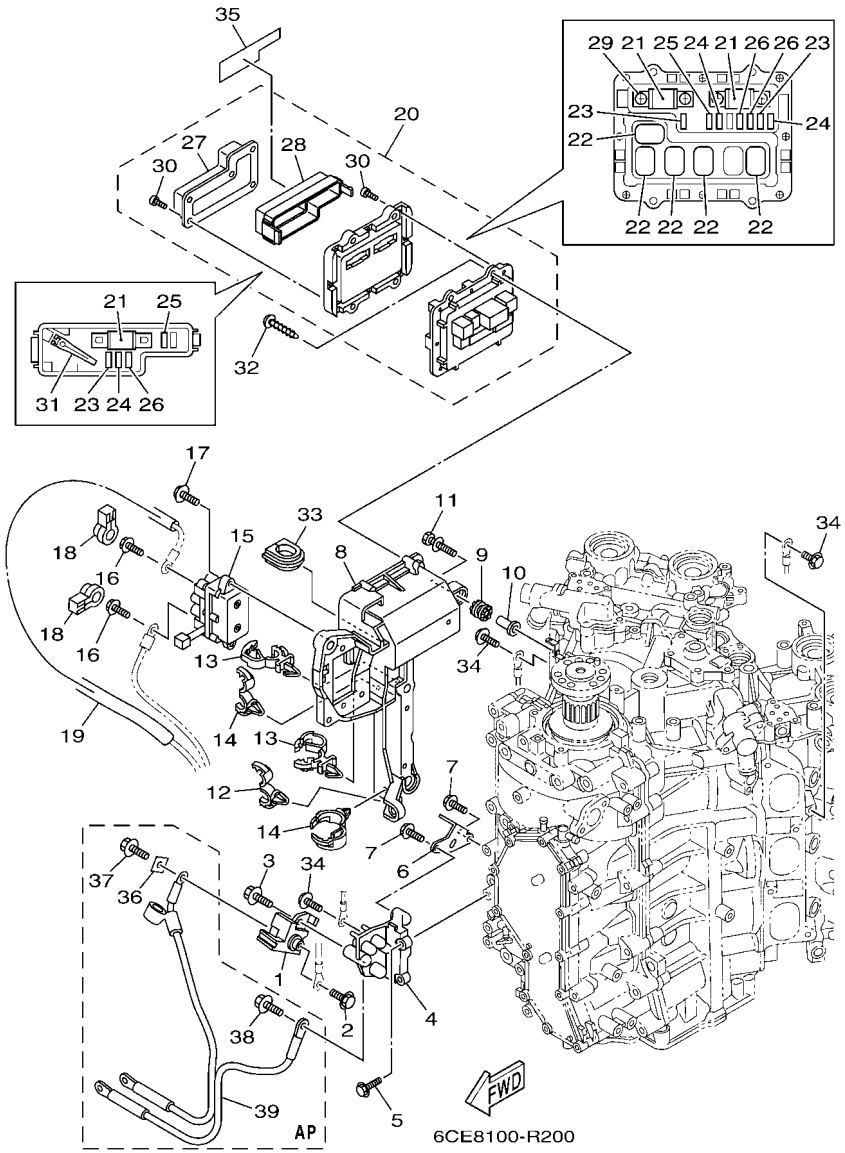

FIG. 20 ELECTRICAL 3

REF. NO.	PART NO.	DESCRIPTION	XCA	UCA				REMARKS
28	6CB–85544–00	.CASE	1	1				
29	68F–82846–00	.SCREW, PAN HEAD (M5)	4	4				
30	6P2–82113–00	.SCREW (M3)	13	13				
31	67F–2812A–00	.PULLER, FUSE	1	1				
32	97780–50620	SCREW, TAPPING	4	4				
33	6P2–81336–00	GROMMET	1	1				
34	97E95–06516	BOLT, HEXAGON W/W DEEP RECESS	5	5				
35	6CE–81919–20	GRAPHIC, REGULATOR	1	1				
36	6CB–81923–00	WASHER	1	1				AP
37	95D95–08016	BOLT, FLANGE DEEP RECESS	1	1				AP
38	95D95–08016	BOLT, FLANGE DEEP RECESS	1	1				AP
39	6CB–82105–01	BATTERY CABLE	1	1				AP

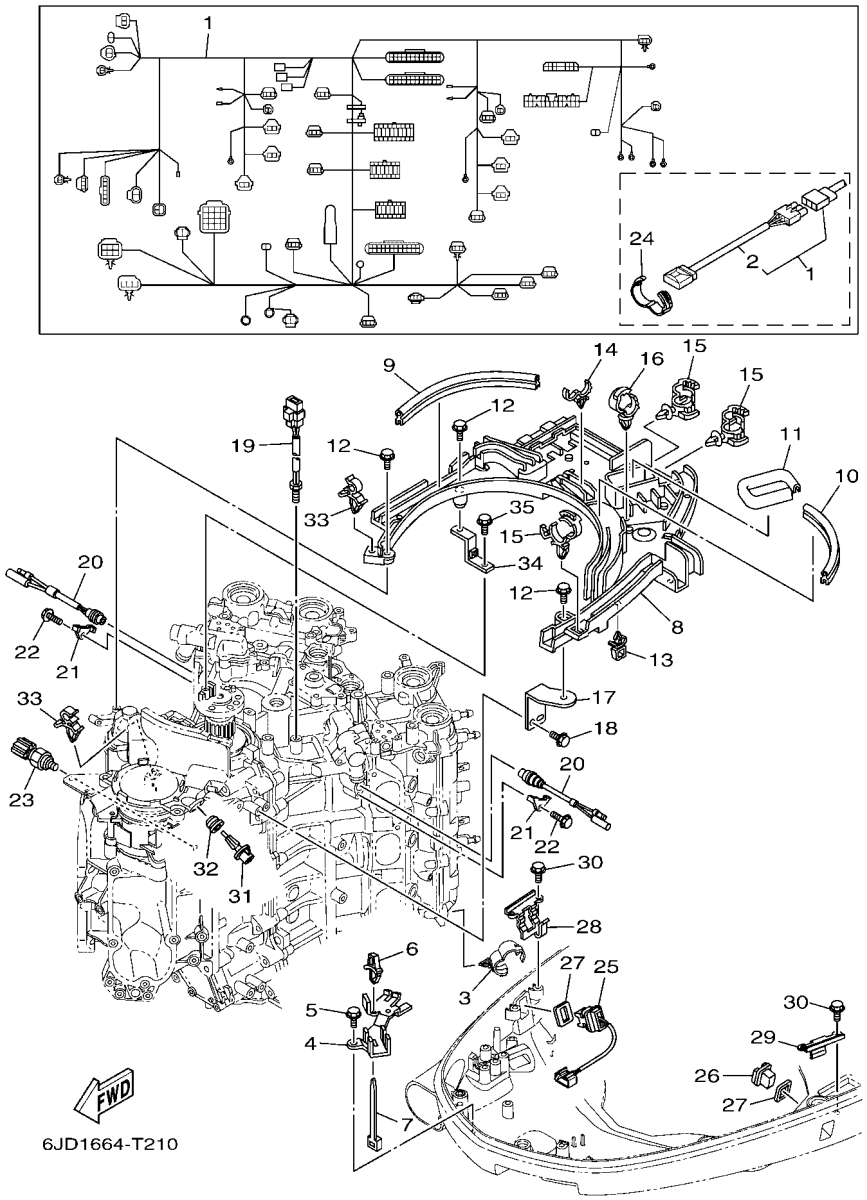

FIG. 21 ELECTRICAL 4

REF. NO.	PART NO.	DESCRIPTION	XCA	UCA				REMARKS
1	6CE–82590–15	WIRE HARNESS ASSY	1	1				FOR TILT LIMIT
2	6CE–81980–00	.DIODE ASSY	1	1				
3	90464–20181	CLAMP	4	4				
4	6CB–82594–00	CLAMP	1	1				
5	95D95–06012	BOLT, FLANGE DEEP RECESS	2	2				
6	90464–06001	CLAMP	1	1				
7	90465–13M24	CLAMP	1	1				
8	6CB–82589–01	PROTECTER, WIRE HARNESS	1	1				
9	6BG–42617–00	DAMPER, FORM	1	1				
10	6CB–42617–00	DAMPER, FORM	1	1				
11	6CB–42629–00	SEAL	1	1				
12	95D95–06020	BOLT, FLANGE DEEP RECESS	5	5				
13	90464–11121	CLAMP	1	1				
14	90464–18246	CLAMP	1	1				
15	90464–12183	CLAMP	4	4				
16	90464–20181	CLAMP	2	2				
17	6CB–82388–00	PLATE	1	1				
18	95D95–06016	BOLT, FLANGE DEEP RECESS	2	2				
19	6CB–85790–00	THERMOSENSOR ASSY	1	1				
20	6P2–82560–01	THERMO SWITCH ASSY	2	2				
21	6E9–82588–00	PLATE	2	2				
22	95D95–06012	BOLT, FLANGE DEEP RECESS	2	2				
23	6AW–83651–00	SENDER, OIL PRESSURE	1	1				
24	90464–16001	CLAMP	1	1				
25	6BR–82563–01	TRIM & TILT SWITCH ASSY	1	1				
26	69J–42723–01	COVER, BOTTOM	1	1				
27	69J–82587–00	GASKET	2	2				

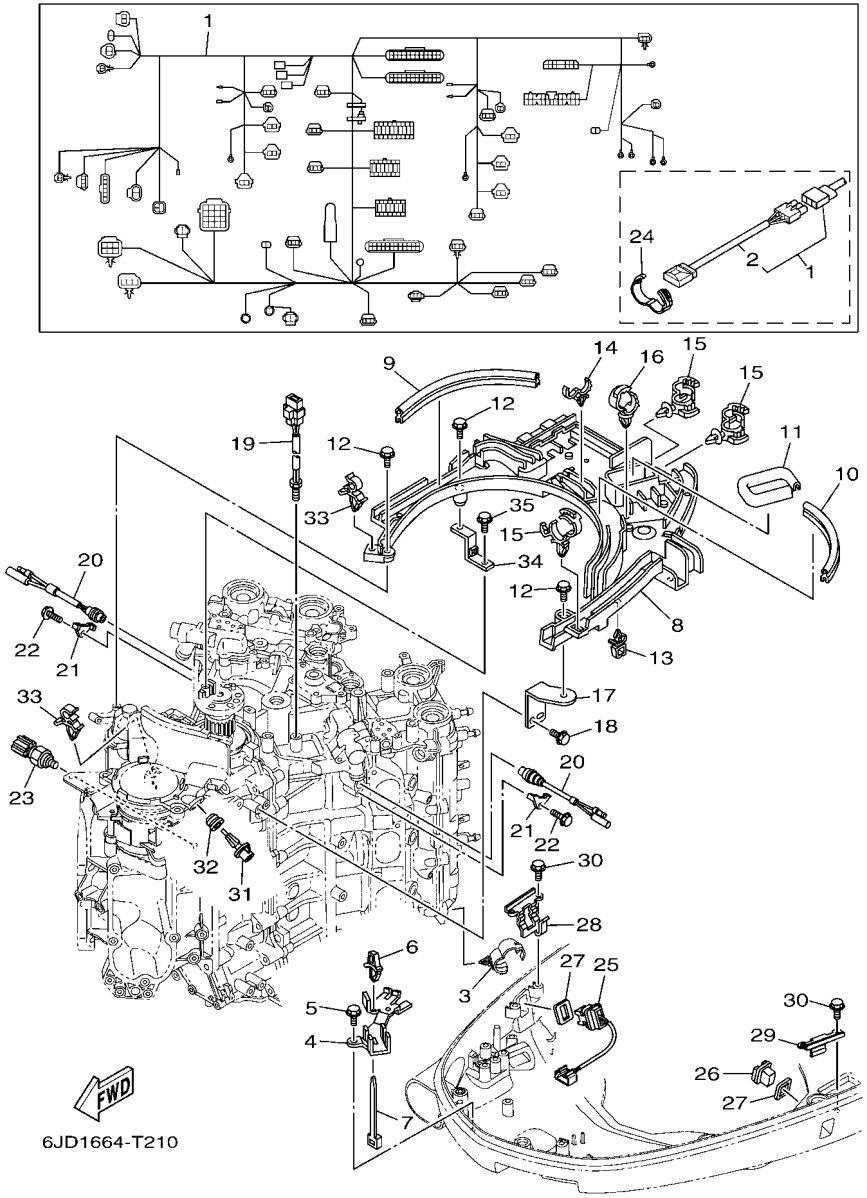

FIG. 21 ELECTRICAL 4

REF. NO.	PART NO.	DESCRIPTION	XCA	UCA				REMARKS
28	63P–83614–01	BRACKET	1	1				
29	6DA–83614–00	BRACKET	1	1				
30	95D95–06012	BOLT, FLANGE DEEP RECESS	4	4				
31	63P–85886–00	SENSOR, AIR TEMPERATURE	1	1				
32	6CE–14435–00	GROMMET	1	1				
33	90464–09129	CLAMP	2	2				
34	6CB–81952–00	HOLDER, RELAY	1	1				
35	95D95–06016	BOLT, FLANGE DEEP RECESS	1	1				

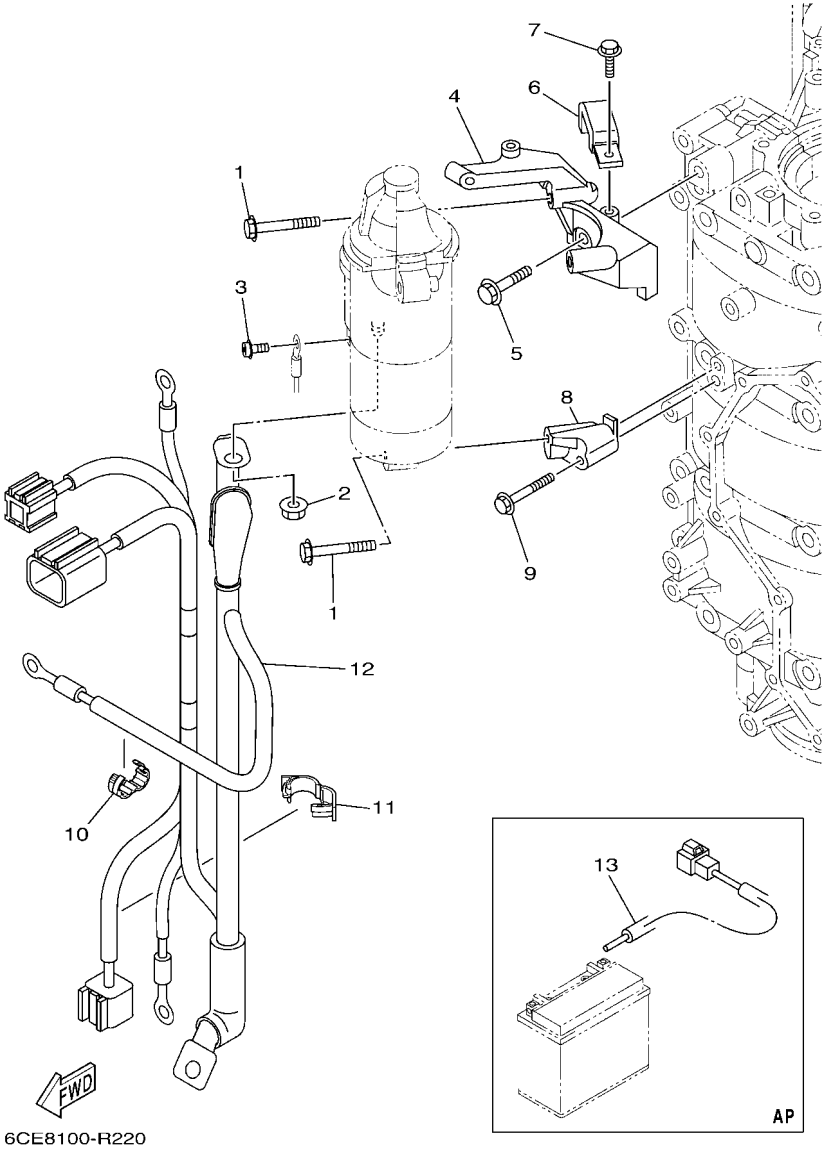

FIG. 22 ELECTRICAL 5

REF. NO.	PART NO.	DESCRIPTION	XCA	UCA				REMARKS
1	97513–08545	BOLT, WITH WASHER	3	3				
2	90179–08003	NUT	1	1				
3	97985–04308	SCREW, WITH WASHER	1	1				
4	6CB–81822–02	BRACKET, STARTING MOTOR	1	1				
5	90105–08M87	BOLT, FLANGE	2	2				
6	6CB–81443–00	CLAMP, LEAD 1	1	1				
7	95D95–06016	BOLT, FLANGE DEEP RECESS	1	1				
8	6CB–81823–A0	STAY, STARTING MOTOR	1	1				
9	90105–06151	BOLT, FLANGE	1	1				
10	90464–13227	CLAMP	1	1				
11	90464–18004	CLAMP	1	1				
12	6CE–8259M–00	WIRE HARNESS ASSY 2	1	1				
13	6CE–81949–01	WIRE, LEAD (ISOLATOR CABLE)	1	1				AP

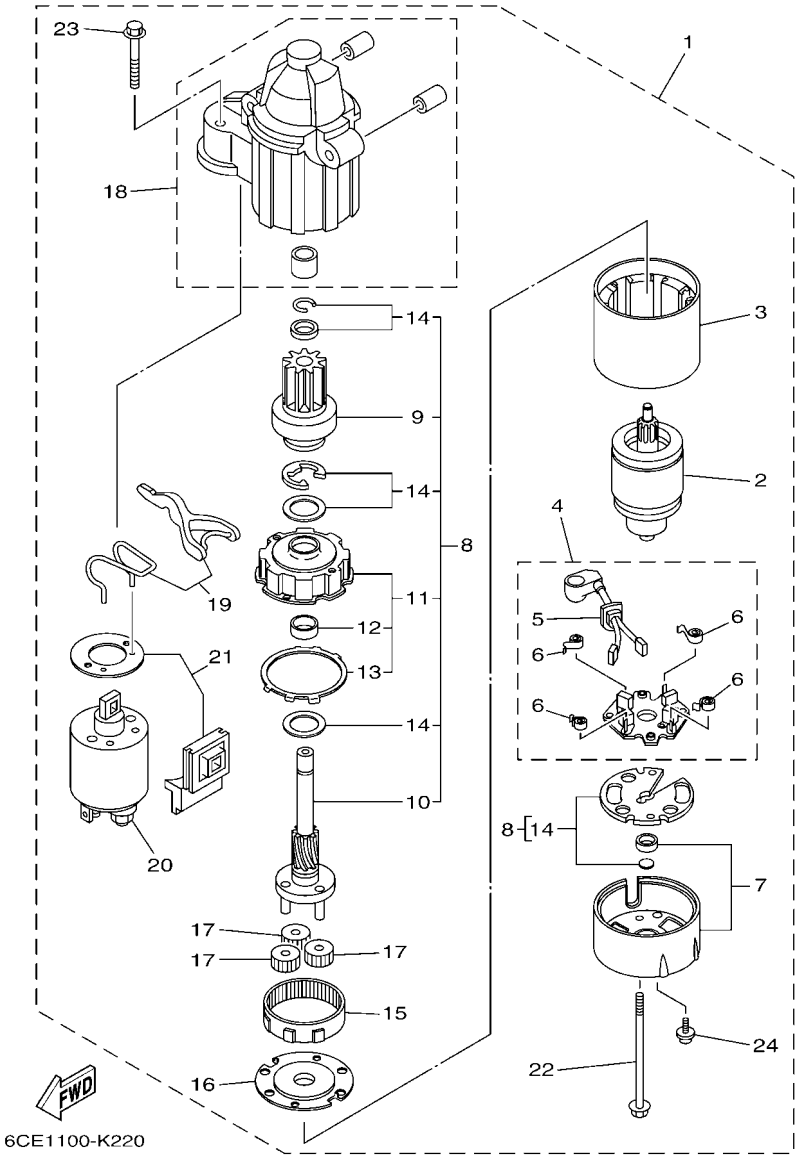

FIG. 23 STARTING MOTOR

REF. NO.	PART NO.	DESCRIPTION	XCA	UCA				REMARKS
1	6CE–81800–01	STARTING MOTOR ASSY	1	1				
2	6CE–81850–00	.ARMATURE ASSY	1	1				
3	6CE–81810–00	.STATOR ASSY	1	1				
4	6CE–81840–01	.BRUSH HOLDER ASSY	1	1				
5	6CE–81801–01	..BRUSH SET	1	1				
6	67F–81813–00	..SPRING, BRUSH	4	4				
7	6CE–81820–00	.REAR BRACKET ASSY	1	1				
8	6CE–81807–00	.GEAR ASSY, STARTING MOTOR	1	1				
9	6CB–81832–00	..CLUTCH, OVER RUN	1	1				
10	6CB–81836–00	..SHAFT, PINION	1	1				
11	6CE–81821–00	..BRACKET, CENTER 1	1	1				
12	67F–81841–00	...BEARING	1	1				
13	67F–8183R–00	...GASKET	1	1				
14	6CB–81809–00	..WASHER KIT	1	1				
15	67F–81891–00	.GEAR, RING	1	1				WITH 67F-8183R-00
16	6CE–81830–00	.BRACKET, CENTER 2	1	1				
17	60V–8183T–00	.GEAR, IDLER	3	3				
18	6CE–81842–00	.COVER	1	1				
19	6CE–81839–00	.LEVER ASSY	1	1				
20	6C5–81941–00	.STARTER RELAY ASSY	1	1				
21	6CE–81869–00	.COVER, DUST	1	1				
22	6CB–81826–00	.BOLT	2	2				
23	69J–81828–00	.BOLT 2	2	2				
24	67F–81846–00	.SCREW	2	2				

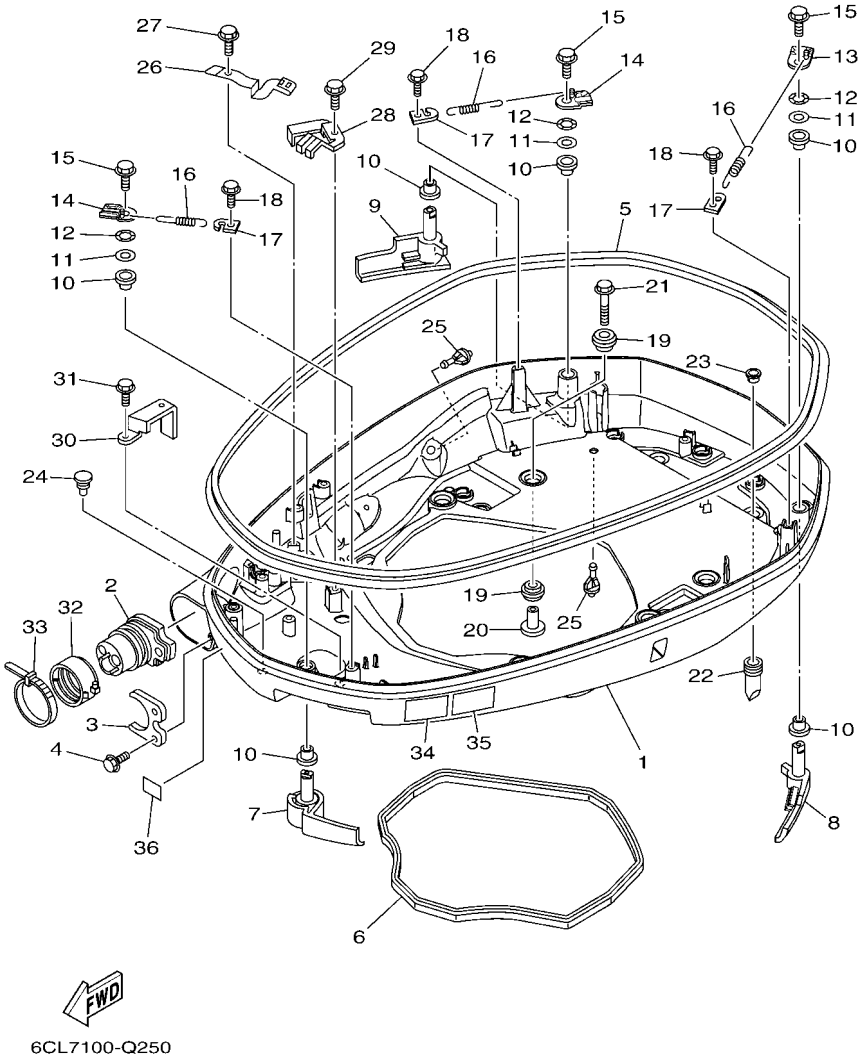

FIG. 24 BOTTOM COWLING 1

REF. NO.	PART NO.	DESCRIPTION	XCA	UCA				REMARKS
1	6CB–42710–00–8D	BOTTOM COWLING ASSY	1	1				
2	6CE–42725–02	GROMMET	1	1				
3	6CB–42761–00	STOPPER	1	1				
4	95D95–06014	BOLT, FLANGE DEEP RECESS	2	2				
5	6CB–42615–01	SEAL	1	1				
6	6CB–42716–00	RUBBER SEAL 1	1	1				
7	6CB–42815–02–8D	LEVER, CLAMP 1	1	1				
8	6CB–42816–02–8D	LEVER, CLAMP 2	1	1				
9	6CB–42817–02–8D	LEVER, CLAMP 3	1	1				
10	90386–15M73	BUSH	6	6				
11	90201–156J2	WASHER, PLATE	3	3				
12	90206–15M18	WASHER, WAVE	3	3				
13	6CB–42818–00	LEVER, CLAMP 4	1	1				
14	6CB–42819–00	LEVER, CLAMP 5	2	2				
15	95D95–08012	BOLT, FLANGE DEEP RECESS	3	3				
16	90506–22001	SPRING, TENSION	3	3				
17	66T–43144–00	HOOK, SPRING	3	3				
18	95D95–06012	BOLT, FLANGE DEEP RECESS	3	3				
19	90480–22M81	GROMMET	12	12				
20	90387–08M37	COLLAR	6	6				
21	90119–08187	BOLT, WITH WASHER	6	6				
22	6DA–42717–00	RUBBER, SEAL 2	2	2				
23	6DA–42384–00	SEAL, CAP	2	2				
24	6H4–42748–00	GROMMET	1	1				
25	6P2–44391–00	NIPPLE, HOSE	2	2				
26	6CB–42743–00	BRACKET	1	1				
27	95D95–06012	BOLT, FLANGE DEEP RECESS	1	1				

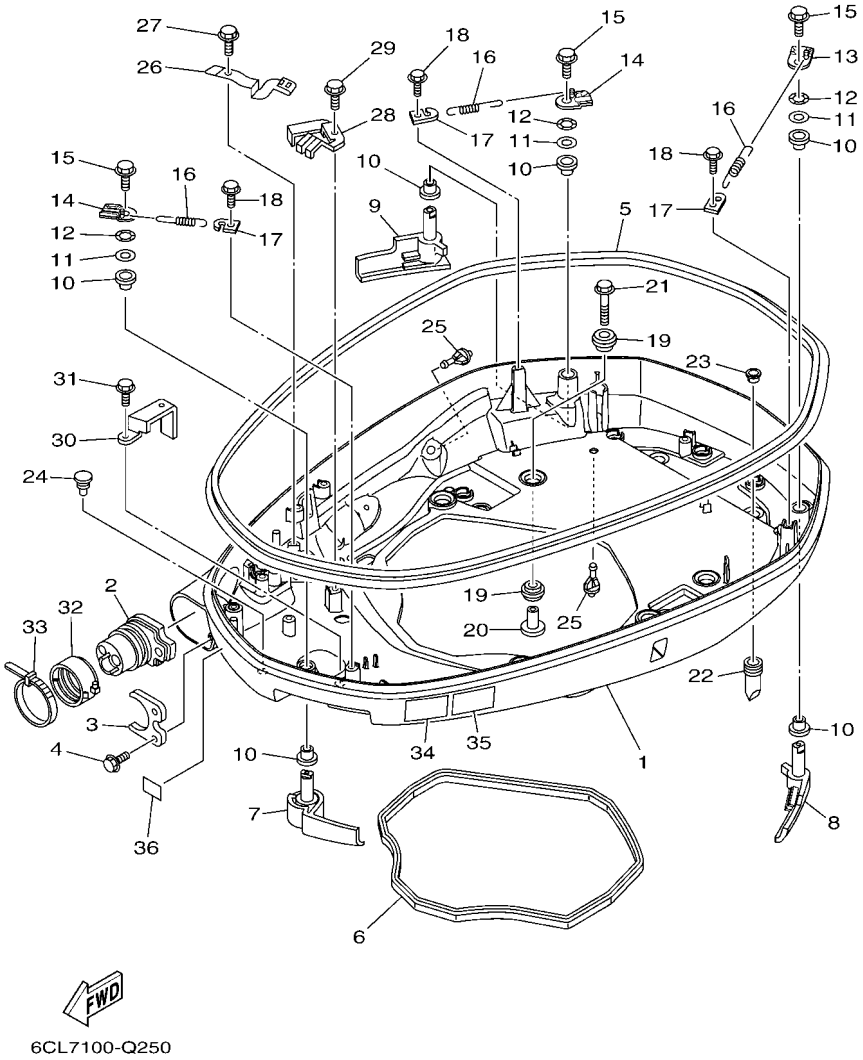

FIG. 24 BOTTOM COWLING 1

REF. NO.	PART NO.	DESCRIPTION	XCA	UCA				REMARKS
28	6CB–42766–00	BRACKET 2	1	1				
29	95D95–06012	BOLT, FLANGE DEEP RECESS	1	1				
30	6CB–42756–00	STAY, CLAMP	1	1				
31	95D95–06012	BOLT, FLANGE DEEP RECESS	1	1				
32	68F–42753–00	FASTNER	1	1				AP
33	90464–20258	CLAMP	1	1				AP
34	6EE–42794–40	LABEL, WARNING (GENERAL)	1	1				
35	6EE–42794–50	LABEL, WARNING (GENERAL)	1	1				
36	6AH–81996–00	MARK	1	1				

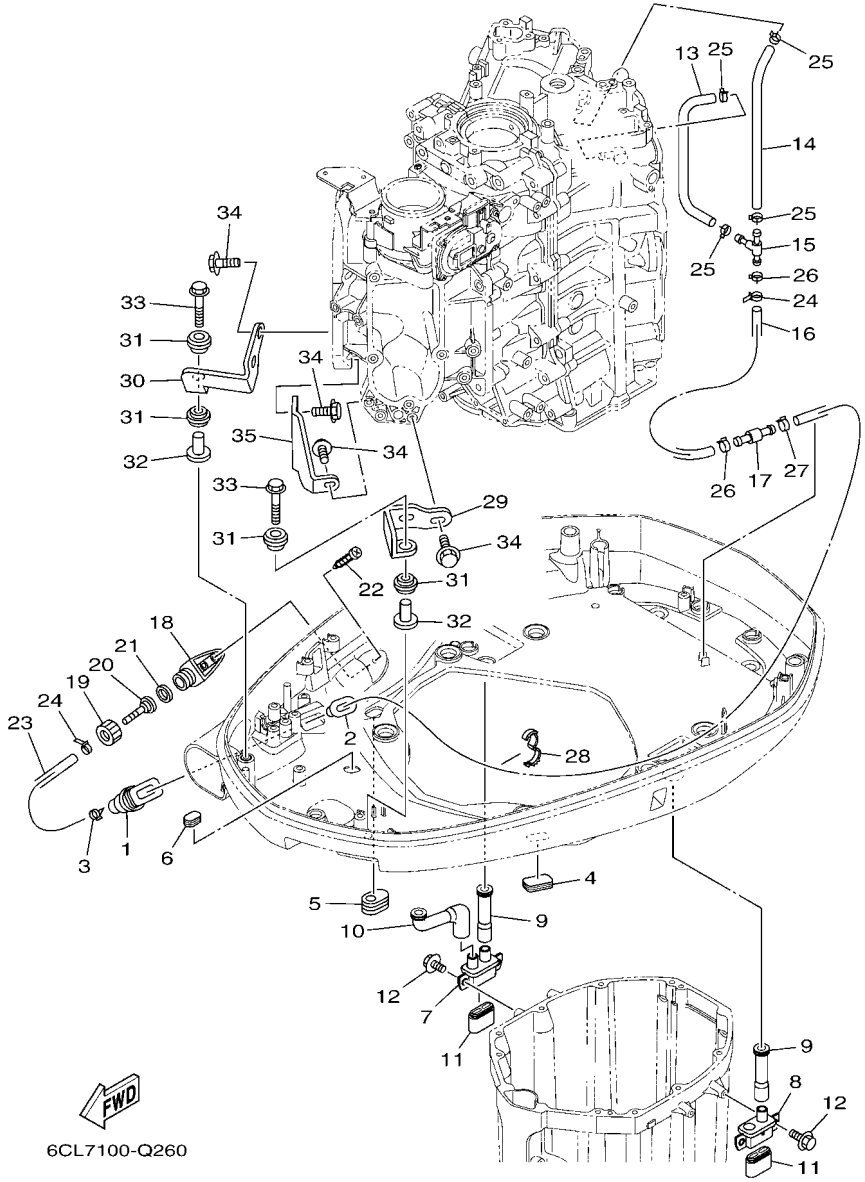

FIG. 25 BOTTOM COWLING 2

REF. NO.	PART NO.	DESCRIPTION	XCA	UCA				REMARKS
1	6H1–42726–21	GROMMET	1	1				
2	6BG–42384–00	SEAL, CAP	1	1				
3	90465–11M10	CLAMP	2	2				
4	6H4–42726–00	GROMMET	1	1				
5	61A–42727–00	GROMMET	1	1				
6	64G–42727–00	GROMMET	1	1				
7	6CE–42733–00	BOX, DRAIN	1	1				
8	6CE–42734–00	BOX, DRAIN 2	1	1				
9	6CE–42786–01	HOSE, DRAIN 1	2	2				
10	6CE–42787–01	HOSE, DRAIN 2	1	1				
11	69J–42717–00	RUBBER, SEAL 2	2	2				
12	95D95–06016	BOLT, FLANGE DEEP RECESS	4	4				
13	6CB–24315–00	PIPE 5	1	1				
14	90445–14021	HOSE (L185)	1	1				
15	6AW–42169–00	JOINT	1	1				
16	90445–16015	HOSE (L300)	1	1				
17	6AW–42785–00	PIPE	1	1				
18	6AW–12572–00	ADAPTER	1	1				
19	6R3–12581–00	JOINT, HOSE 1	1	1				
20	6AW–12582–00	JOINT, HOSE 2	1	1				
21	6R3–12583–00	GASKET, HOSE JOINT	1	1				
22	97780–60520	SCREW, TAPPING	2	2				
23	90445–14019	HOSE (L1460)	1	1				
24	90465–11M10	CLAMP	2	2				
25	90467–130A5	CLIP	4	4				
26	90467–140A8	CLIP	2	2				
27	90467–140A9	CLIP	1	1				

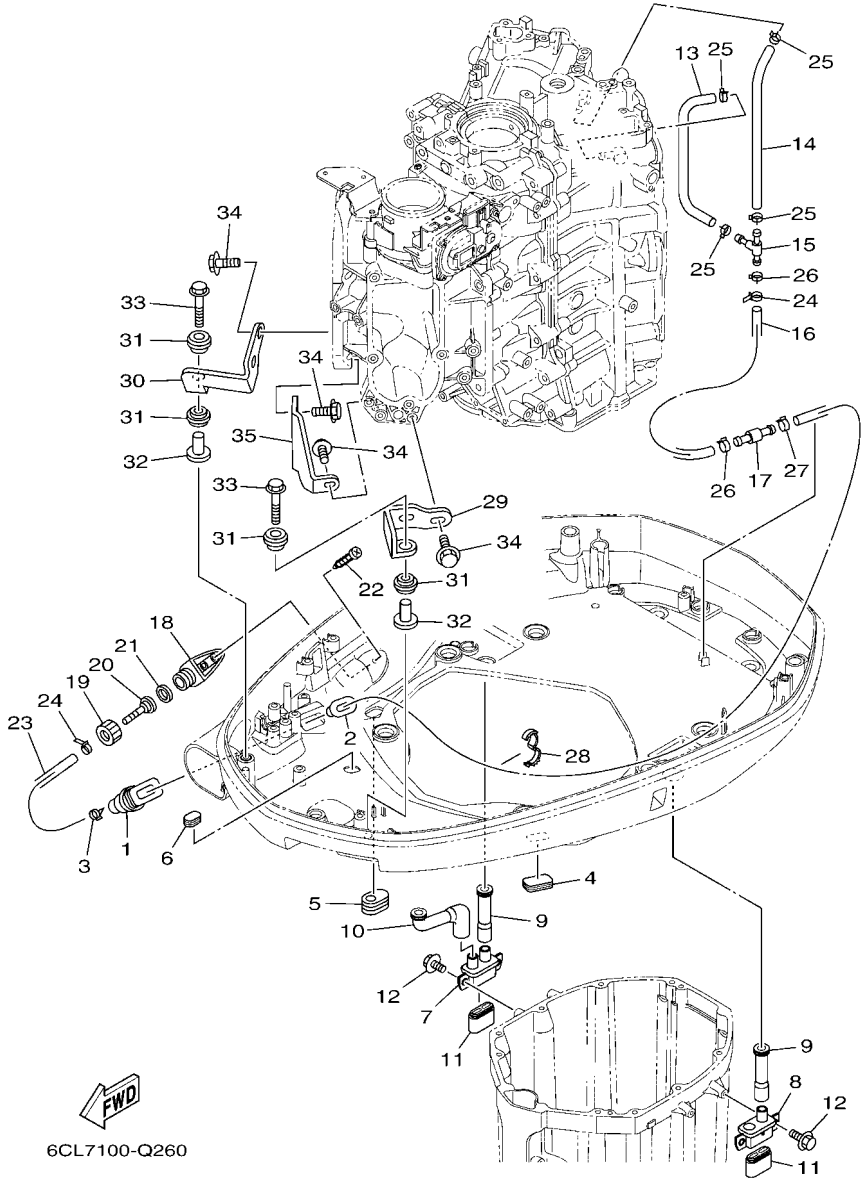

FIG. 25 BOTTOM COWLING 2

REF. NO.	PART NO.	DESCRIPTION	XCA	UCA				REMARKS
28	90464–16001	CLAMP	1	1				
29	6CB–42643–00	PLATE, CLAMP	1	1				
30	6CB–42644–00	PLATE, CLAMP 2	1	1				
31	90480–14029	GROMMET	4	4				
32	90387–06M03	COLLAR	2	2				
33	90119–06291	BOLT, WITH WASHER	2	2				
34	90105–06039	BOLT, FLANGE	6	6				
35	6CB–42744–00	STAY	1	1				

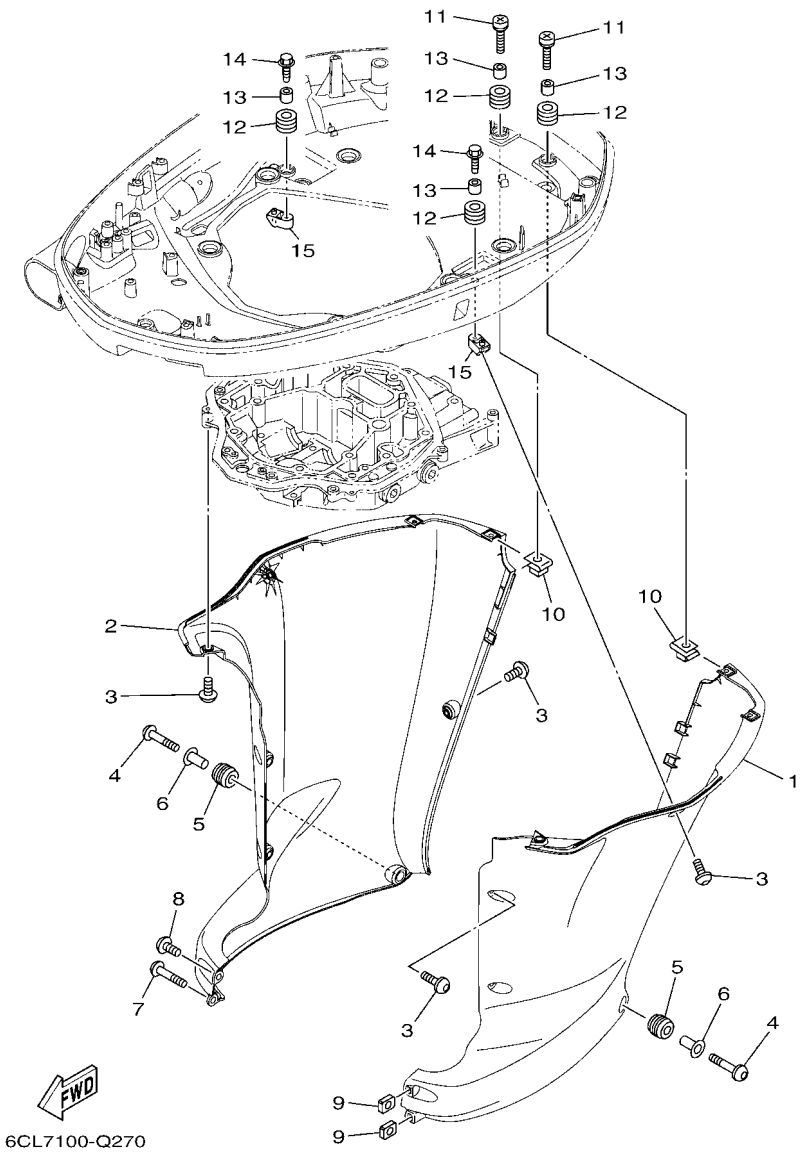

FIG. 26 BOTTOM COWLING 3

REF. NO.	PART NO.	DESCRIPTION	XCA	UCA				REMARKS
1	6CE–42741–01–8D	APRON	1	1				
2	6CE–42771–01–8D	APRON	1	1				
3	90111–06144	BOLT,HEX. SOCKET BUTTON	10	10				
4	90111–06142	BOLT,HEX. SOCKET BUTTON	2	2				
5	90480–16009	GROMMET	2	2				
6	90387–07028	COLLAR	2	2				
7	90111–06142	BOLT,HEX. SOCKET BUTTON	1	1				
8	90111–06144	BOLT,HEX. SOCKET BUTTON	1	1				
9	90173–06001	NUT, SQUARE	2	2				
10	90183–061A6	NUT, SPRING	4	4				
11	90159–06053	SCREW, WITH WASHER	4	4				
12	90480–13M24	GROMMET	6	6				
13	90387–06M43	COLLAR	6	6				
14	90109–06M80	BOLT	2	2				
15	6CE–42774–A0	STAY, APRON 1	2	2				

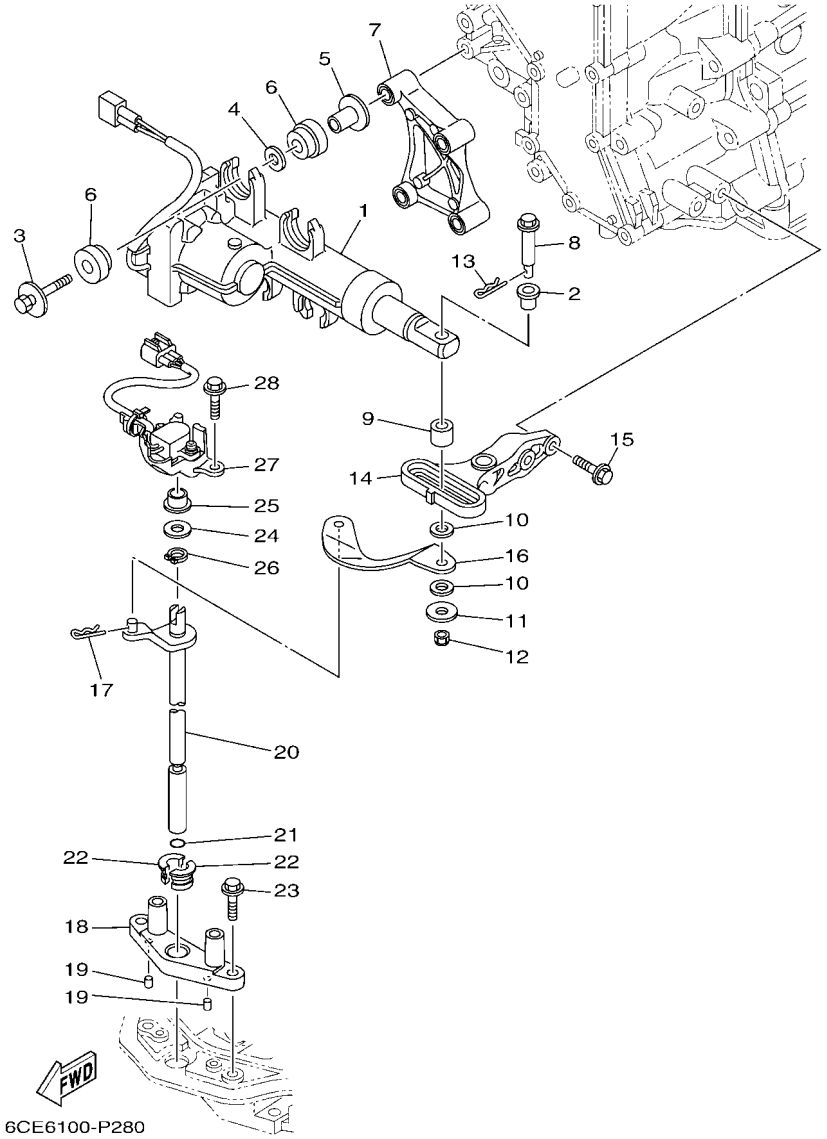

FIG. 27 CONTROL

REF. NO.	PART NO.	DESCRIPTION	XCA	UCA				REMARKS
1	6ML–4820A–00	ACTUATOR UNIT	1	1				
2	90386–08008	BUSH	1	1				
3	90119–08168	BOLT, WITH WASHER	4	4				
4	90201–12064	WASHER, PLATE	4	4				
5	90387–08104	COLLAR	4	4				
6	6CE–85564–00	GROMMET	8	8				
7	6CE–44142–20	JOINT	1	1				
8	6CE–42195–10	PIN, JOINT 1	1	1				
9	6CE–44122–20	BUSHING, SHIFT ROD LEVER	1	1				
10	90202–08M41	WASHER, PLATE	2	2				
11	90201–06068	WASHER, PLATE	1	1				
12	90185–06M07	NUT, SELF-LOCKING	1	1				
13	90468–18008	CLIP	1	1				
14	6CE–44117–10	BRACKET	1	1				
15	97E75–06525	BOLT, HEXAGON W/W DEEP RECESS	2	2				
16	6CE–44121–10	LEVER, SHIFT ROD	1	1				
17	90468–18008	CLIP	1	1				
18	6CE–44118–A0	BRACKET	1	1				
19	93604–07M13	PIN, DOWEL	2	2				
20	6CE–44120–21	HANDLE GEAR SHIFT ASSY	1	1				
21	93210–09165	O-RING	1	1				
22	90386–11001	BUSH	2	2				
23	95D75–06025	BOLT, FLANGE DEEP RECESS	2	2				
24	90201–11008	WASHER, PLATE	1	1				
25	90386–10001	BUSH	1	1				
26	93410–10082	CIRCLIP	1	1				
27	6CE–68303–00	SENSOR ASSY	1	1				

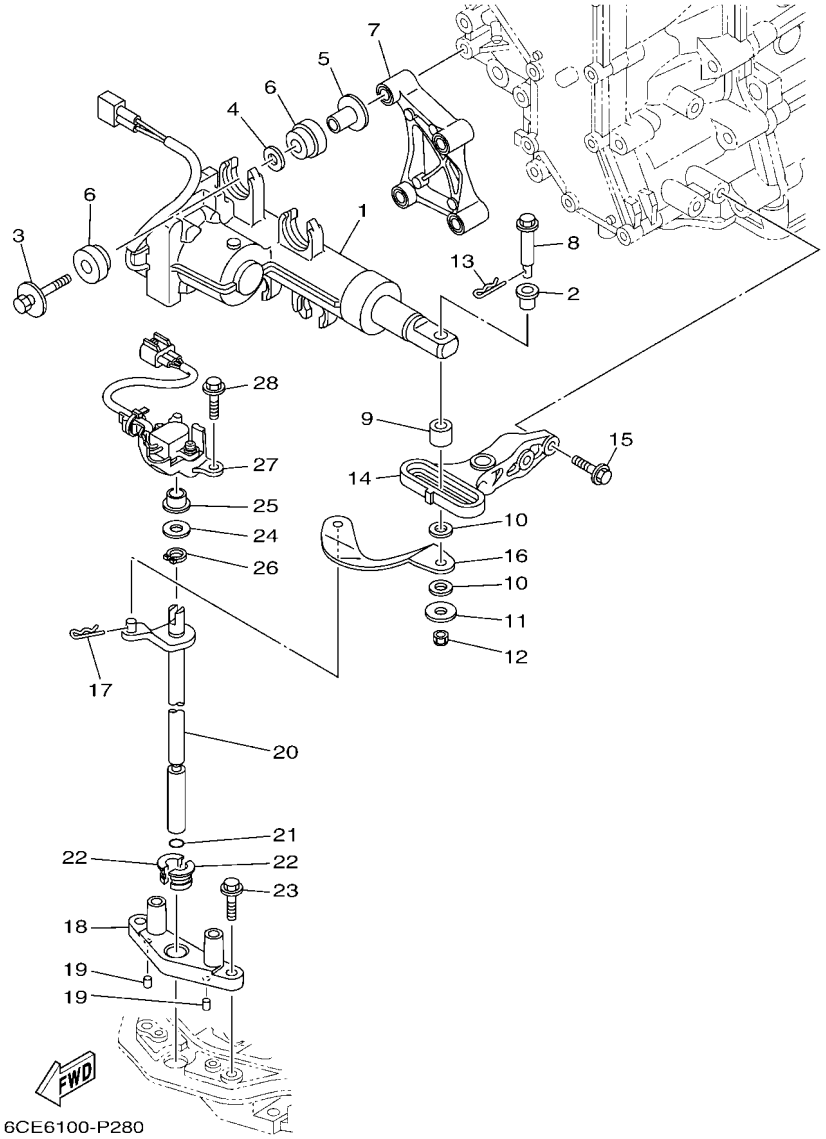

FIG. 27 CONTROL

REF. NO.	PART NO.	DESCRIPTION	XCA	UCA				REMARKS
28	95D75–06025	BOLT, FLANGE DEEP RECESS	2	2				

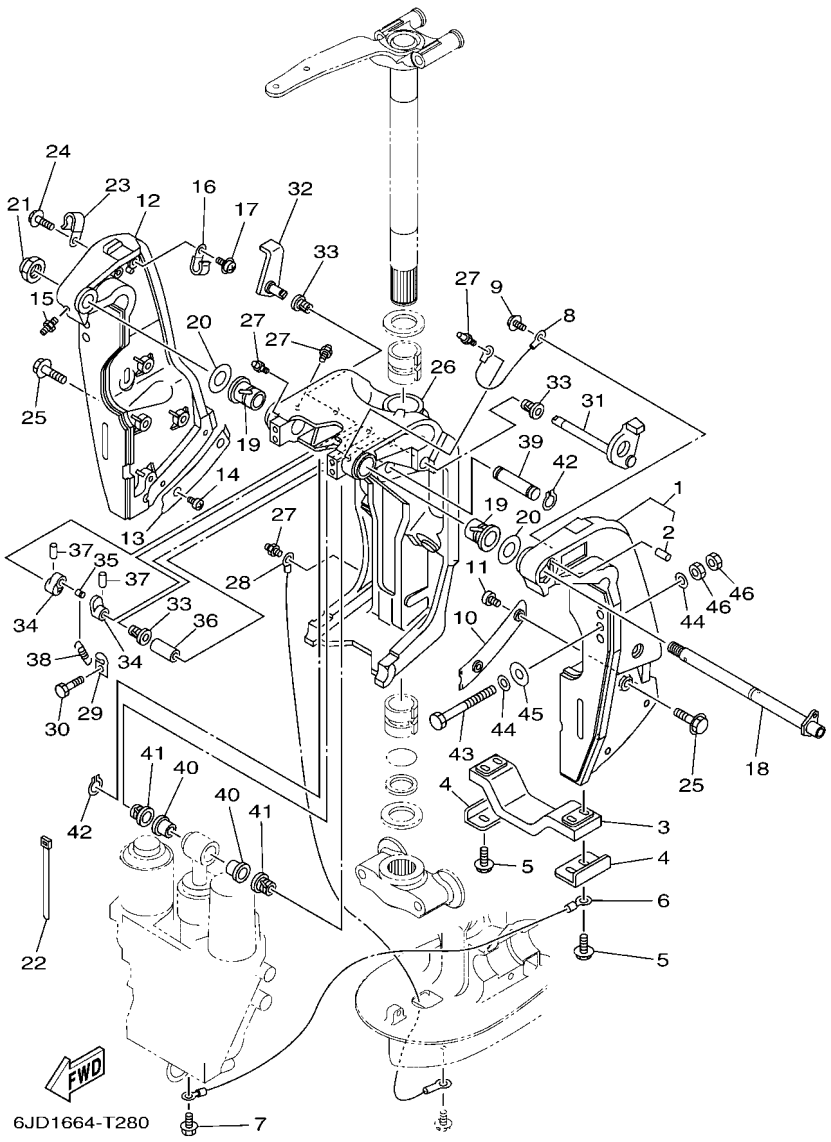

FIG. 28 BRACKET 1

REF. NO.	PART NO.	DESCRIPTION	XCA	UCA				REMARKS
1	69J–43111–11–8D	BRACKET, CLAMP 1	1	1				FOR TILT LIMIT
2	93606–19002	.PIN, DOWEL	1	1				
3	6G5–45251–02	ANODE	1	1				
4	6G5–44526–00	PLATE	2	2				
5	97E95–06525	BOLT, HEXAGON W/W DEEP RECESS	4	4				
6	6H1–82148–00	WIRE, LEAD 4	1	1				
7	97E95–06510	BOLT, HEXAGON W/W DEEP RECESS	1	1				
8	6E5–82148–00	WIRE, LEAD 4	1	1				
9	97985–06212	SCREW, WITH WASHER	1	1				
10	61A–43132–00	WASHER, FRICTION	1	1				
11	97885–06010	SCREW, PAN HEAD	2	2				
12	69J–43112–02–8D	BRACKET, CLAMP 2	1	1				
13	61A–43133–00	WASHER,FRICTION	1	1				
14	97885–06010	SCREW, PAN HEAD	2	2				
15	93700–06002	NIPPLE, GREASE	1	1				
16	90465–08M83	CLAMP	1	1				
17	97985–06212	SCREW, WITH WASHER	1	1				
18	6R3–43131–30	BOLT, CLAMP BRACKET	1	1				FOR TILT LIMIT
19	90386–25M31	BUSH	2	2				
20	90201–26M59	WASHER, PLATE	2	2				
21	90185–22M11	NUT, SELF-LOCKING	1	1				
22	90465–11M10	CLAMP	4	4				
23	90465–08M83	CLAMP	1	1				
24	97E95–06514	BOLT, HEXAGON W/W DEEP RECESS	1	1				
25	90119–10024	BOLT, WITH WASHER	8	8				
26	61A–43311–22–8D	BRACKET, SWIVEL 1	1	1				
27	93700–06002	NIPPLE, GREASE	5	5				

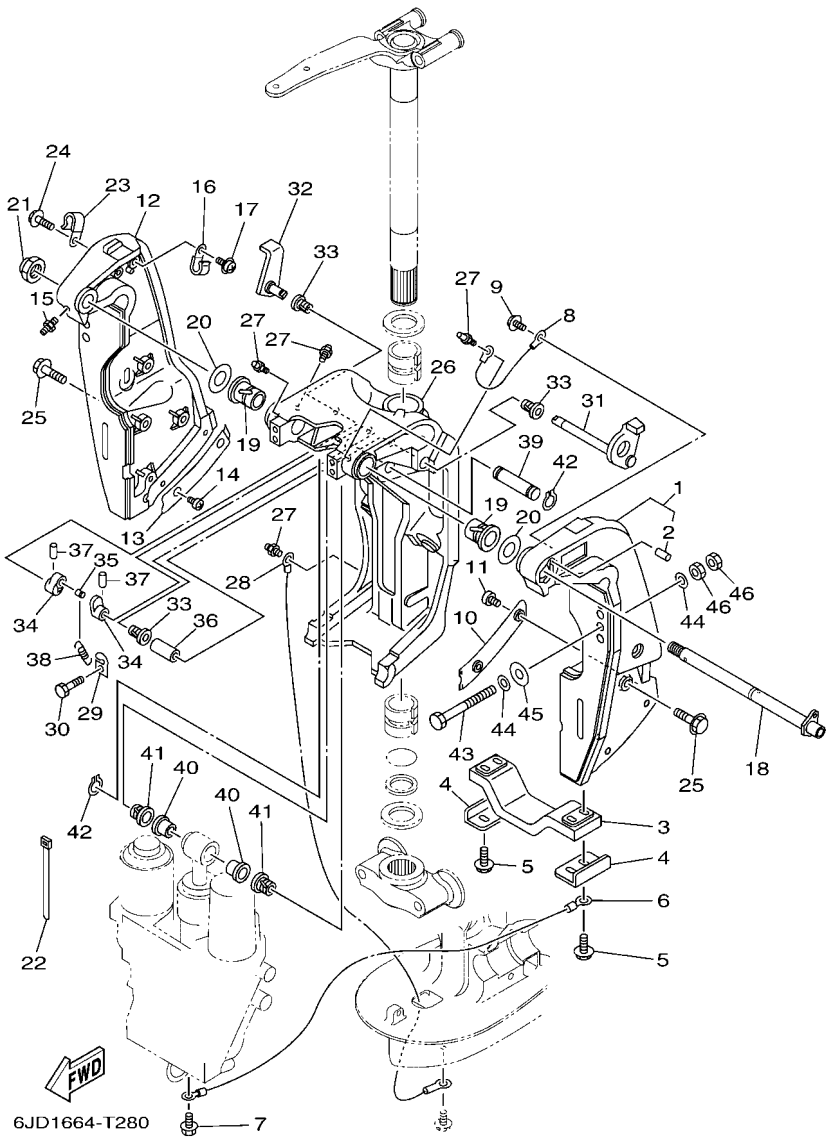

FIG. 28 BRACKET 1

REF. NO.	PART NO.	DESCRIPTION	XCA	UCA				REMARKS
28	69J–82147–00	WIRE, LEAD 5	1	1				
29	6G5–43144–00	HOOK, SPRING	1	1				
30	97D95–06010	BOLT, HEXAGON DEEP RECESS	1	1				
31	61A–43181–01	LEVER, TILT STOP 1	1	1				
32	6G5–43185–02	LEVER, TILT STOP 2	1	1				
33	90386–10M16	BUSH	3	3				
34	6G5–43148–00	COLLAR, DISTANCE	2	2				
35	90249–06M19	PIN	1	1				
36	90387–10M05	COLLAR	1	1				
37	91690–30020	PIN, SPRING	2	2				
38	90506–16003	SPRING, TENSION	1	1				
39	6E5–43126–10	PIN, UPPER SHOCK MOUNT	1	1				
40	90386–18M63	BUSH	2	2				
41	90386–18M14	BUSH	2	2				
42	93410–18M05	CIRCLIP	2	2				
43	90101–12065	BOLT (L:130MM)	2	2				UR
	90101–12066	BOLT (L:150MM)	2	2				UR
44	90201–13M01	WASHER, PLATE	8	8				
45	90201–12426	WASHER, PLATE	4	4				
46	95380–12600	NUT	8	8				

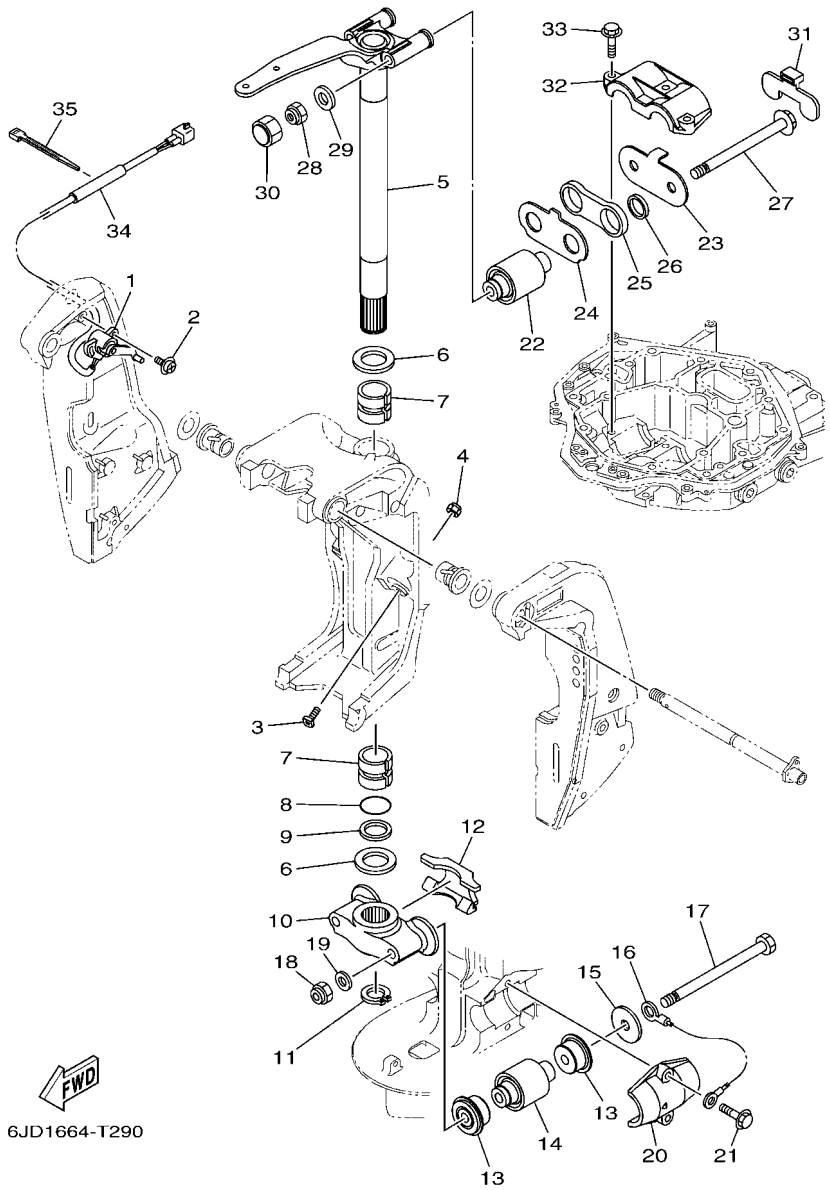

FIG. 29 BRACKET 2

REF. NO.	PART NO.	DESCRIPTION	XCA	UCA				REMARKS
1	69J–83672–11	TRIM SENDER	1	1				
2	97985–06216	SCREW, WITH WASHER	2	2				
3	6AW–43376–00	BOLT, THRUST RECEIVER	2	2				
4	95780–10300	NUT, FLANGE	2	2				
5	6CE–42510–00–8D	STEERING BRACKET ASSY	1	1				
6	90201–40M00	WASHER, PLATE	2	2				
7	90386–39M89	BUSH	2	2				
8	93210–35321	O-RING	1	1				
9	90202–40M47	WASHER, PLATE	1	1				
10	6CE–44551–00–CA	HOUSING, LOWER MOUNT RUBBER 1	1	1				
11	93410–37M04	CIRCLIP	1	1				
12	6CE–44574–00	STOPPER, LOWER MOUNT RUBBER	1	1				
13	6CE–44575–00	DAMPER, LOWER MOUNT RUBBER	4	4				
14	6CE–44555–00	MOUNT DAMPER, LOWER SIDE	2	2				
15	90201–16032	WASHER, PLATE	2	2				
16	6AW–82149–00	WIRE, LEAD 3	1	1				
17	90101–14004	BOLT	2	2				
18	90185–14M00	NUT, SELF-LOCKING	2	2				
19	92995–14600	WASHER	2	2				
20	6CE–44552–00–CA	HOUSING, LOWER MOUNT RUBBER 2	2	2				
21	90119–10024	BOLT, WITH WASHER	4	4				
22	6CE–44514–00	MOUNT DAMPER, UPPER SIDE	2	2				
23	6CE–44526–00	PLATE	1	1				
24	6CE–44536–00	PLATE 2	1	1				
25	6CE–44532–00	STOPPER, UPPER MOUNT	1	1				
26	90387–28013	COLLAR	2	2				
27	90105–14005	BOLT, FLANGE	2	2				

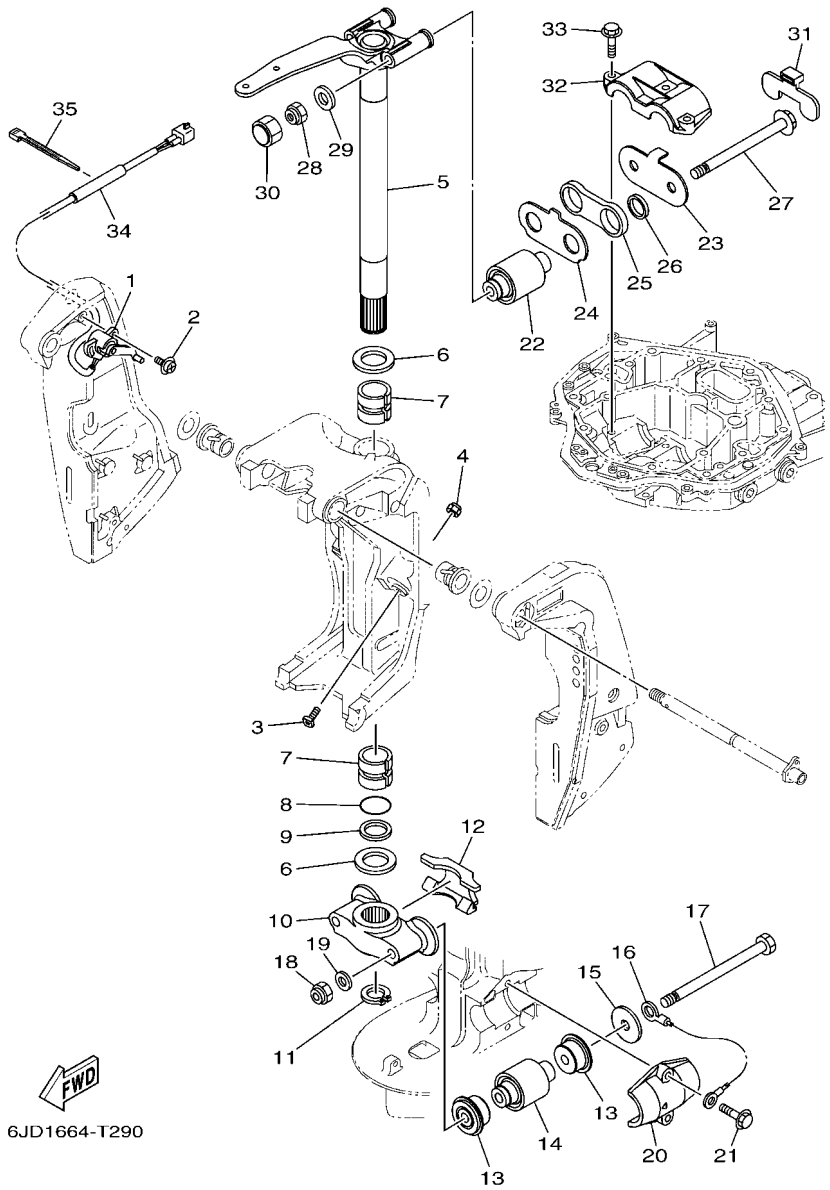

FIG. 29 BRACKET 2

REF. NO.	PART NO.	DESCRIPTION	XCA	UCA				REMARKS
28	90185–14M00	NUT, SELF-LOCKING	2	2				
29	92995–14600	WASHER	2	2				
30	6CE–44194–00	CAP	2	2				
31	6CE–44533–00	DAMPER, UPPER MOUNT RUBBER	1	1				
32	6CE–44511–00	COVER, UPPER MOUNT	1	1				
33	90119–10024	BOLT, WITH WASHER	3	3				
34	90446–15003	HOSE (L100)	1	1				
35	90465–11M10	CLAMP	1	1				

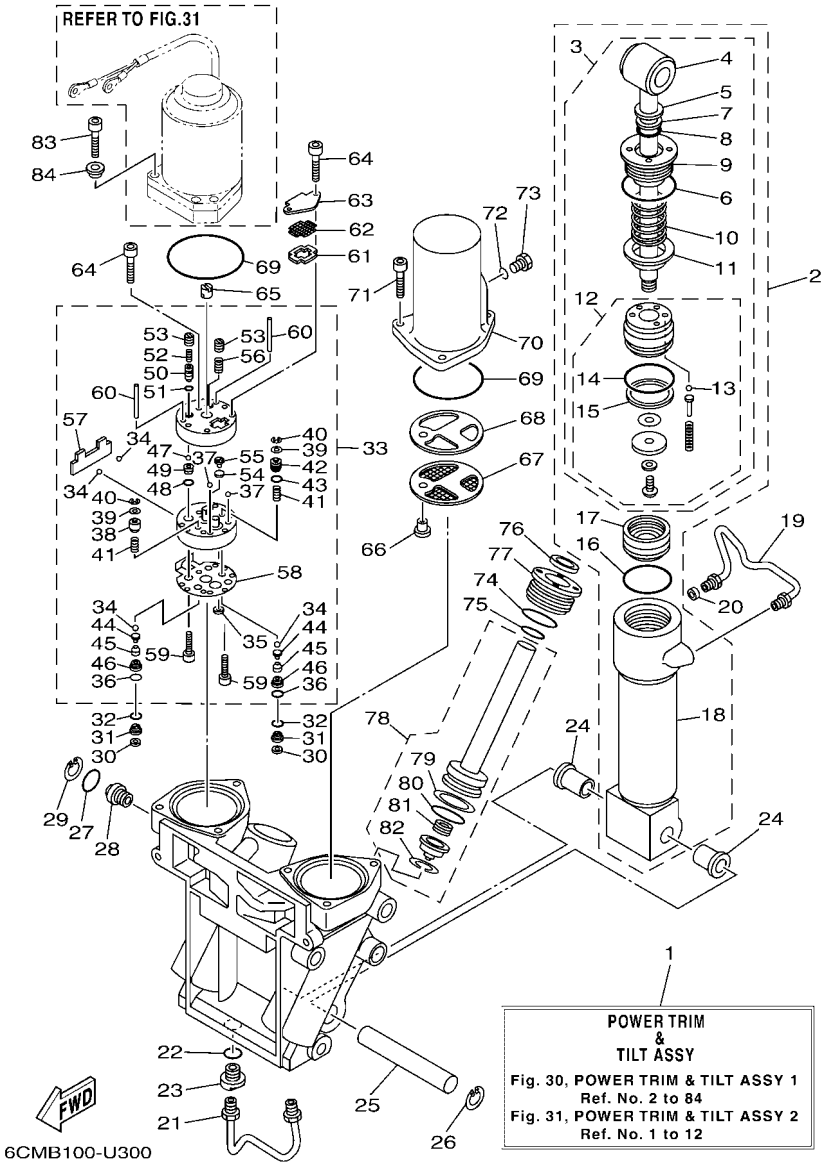

FIG. 30 POWER TRIM & TILT ASSY 1

REF. NO.	PART NO.	DESCRIPTION	XCA	UCA				REMARKS
1	69J–43800–11–8D	POWER TRIM & TILT ASSY	1	1				
2	6CE–43840–01	POWER TILT ASSY	1	1				
3	6CE–43810–01	.TILT PISTON SUB ASSY	1	1				
4	69J–43801–01	..ROD	1	1				
5	93106–19001	..OIL SEAL	1	1				
6	63P–43861–20	..O-RING	1	1				
7	6H1–43872–00	..RING, BACK UP	1	1				
8	61A–4389H–01	..O-RING	1	1				
9	61A–43811–00	..SCREW, CYLINDER END	1	1				
10	69J–4384H–00	..SPRING	1	1				
11	69J–4382E–00	..ADAPTOR 2	1	1				
12	6CE–4380P–00	..PISTON SUB ASSY	1	1				
13	93505–32038	...BALL	5	5				
14	61A–43861–00	...O-RING	1	1				
15	61A–43871–00	...RING, BACK UP	1	1				
16	61A–43861–00	.O-RING	1	1				
17	6H1–43814–11	.PISTON, FREE	1	1				
18	61A–43813–02	.CYLINDER, TILT	1	1				
19	69J–43835–10	PIPE	1	1				
20	69J–4388J–00	PLUG 2	1	1				
21	69J–43833–02	PIPE	1	1				
22	93210–17239	O-RING	1	1				
23	69J–4388E–01	BOLT ,SCREW	1	1				
24	90386–18M14	BUSH	2	2				
25	61A–43818–00	PIN, LOWER SHOCK MOUNT	1	1				
26	61A–43876–01	RING, SNAP	1	1				
27	6D8–43863–00	O-RING	1	1				

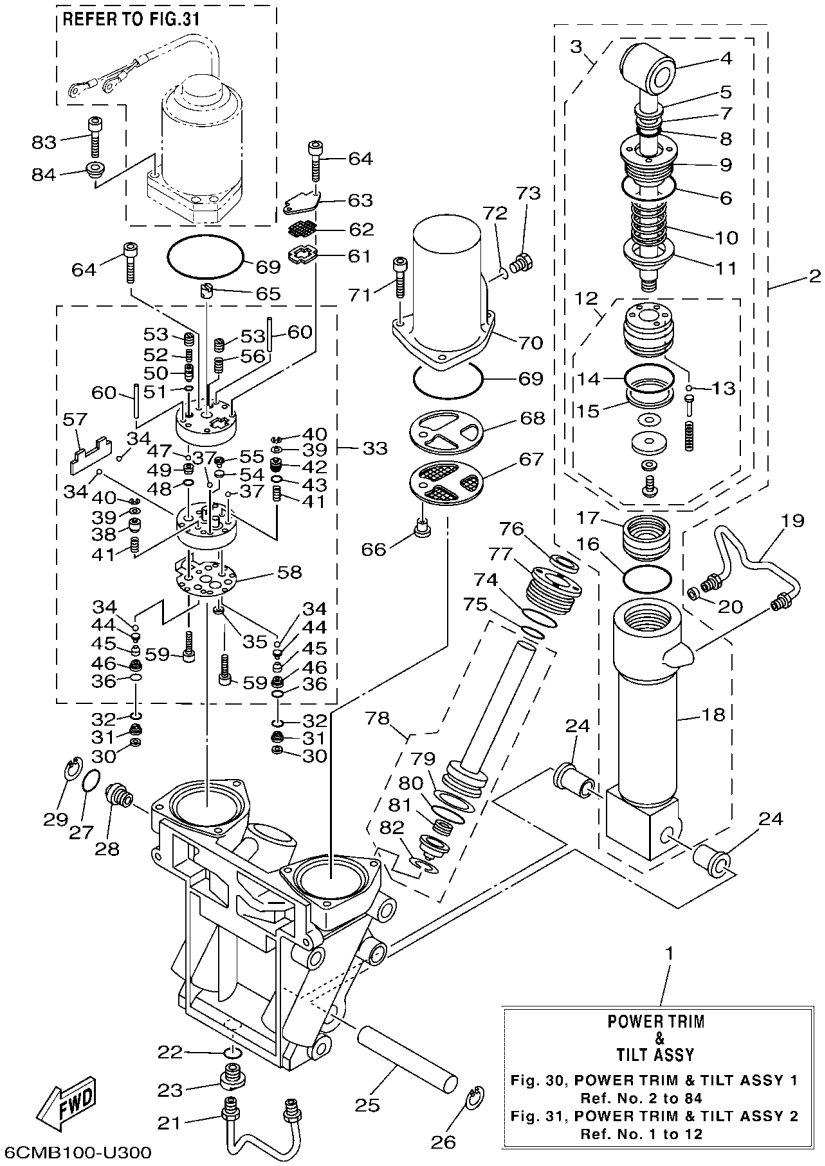

FIG. 30 POWER TRIM & TILT ASSY 1

REF. NO.	PART NO.	DESCRIPTION	XCA	UCA				REMARKS
28	69J–43845–00	SCREW, MANUAL RELEASE	1	1				
29	6H1–43875–00	RING, SNAP	1	1				
30	69J–4381C–00	FILTER 3	2	2				
31	69J–43899–01	PLATE STOPPER	2	2				
32	69J–4389J–00	O-RING	2	2				
33	69J–43830–01	GEAR PUMP ASSY	1	1				
34	93505–32038	.BALL	4	4				
35	69J–4381C–00	.FILTER 3	1	1				
36	69J–4389J–00	.O-RING	2	2				
37	93503–16003	.BALL	2	2				
38	6CJ–4384M–00	.PISTON, SHUTTLE 2	1	1				
39	69A–4384F–00	.SEAL, MAIN VALVE	2	2				
40	99002–03600	.CIRCLIP	2	2				
41	69J–43894–00	.SPRING, SHUTTLE RETURN	2	2				
42	6CJ–43841–00	.PISTON, SHUTTLE	1	1				
43	6H1–43883–00	.O-RING	1	1				
44	60V–4386A–00	.PIN, ABSORBER VALVE	2	2				
45	69J–43853–00	.SPRING, MAIN VALVE	2	2				
46	6CJ–43893–00	.WASHER	2	2				
47	93501–08001	.BALL	2	2				
48	93210–08391	.O-RING	1	1				
49	69J–43851–00	.SEAT, RELIEF VALVE	1	1				
50	63P–43844–20	.PIN, VALVE SUPPORT	1	1				
51	93210–064A5	.O-RING	1	1				
52	69J–43855–00	.SPRING, UP RELIEF	1	1				
53	6CJ–43843–00	.SCREW, VALVE LOCK	2	2				
54	6H1–4384G–11	.SEAL, RELIEF VALVE	1	1				

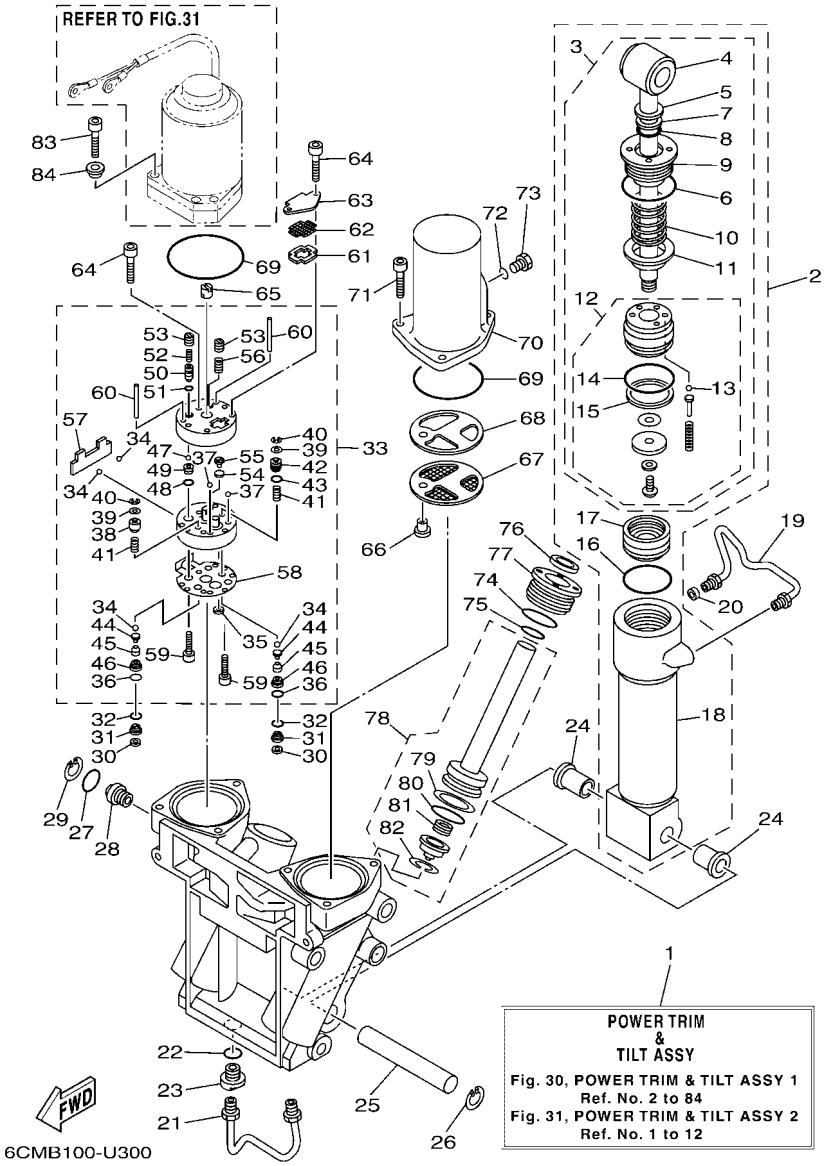

FIG. 30 POWER TRIM & TILT ASSY 1

REF. NO.	PART NO.	DESCRIPTION	XCA	UCA				REMARKS
55	6H1–43844–10	.PIN, VALVE SUPPORT	1	1				
56	6H1–43856–10	.SPRING, DOWN RELIEF	1	1				
57	69J–43854–00	.SPRING, MANUAL RELEASE	1	1				
58	69J–4384G–00	.SEAL, RELIEF VALVE	1	1				
59	91318–05025	.BOLT	2	2				
60	93604–35236	.PIN, DOWEL	2	2				
61	69J–43871–00	RING, BACK UP	1	1				
62	69J–43816–00	FILTER 1	1	1				
63	69J–4381J–00	PLATE	1	1				
64	91318–05040	BOLT	3	3				
65	69J–43831–00	CONNECTOR, SHAFT	1	1				
66	69J–4388H–00	PLUG	1	1				
67	69J–43817–00	FILTER 2	1	1				
68	69J–4388F–00	SPACER	1	1				
69	93210–66001	O-RING	2	2				
70	69J–43828–00	BODY, RESERVOIR	1	1				
71	69J–43888–00	BOLT, SOCKET	3	3				
72	93210–09165	O-RING	1	1				
73	6H1–43829–00	PLUG, RESERVOIR	1	1				
74	61A–43861–00	O-RING	2	2				
75	6D8–43863–00	O-RING	2	2				
76	63P–43812–20	SEAL, DUST	2	2				
77	61A–43821–02	SCREW, TRIM CYLINDER END	2	2				
78	69J–43820–01	TRIM PISTON SUB ASSY	2	2				
79	61A–43874–00	.RING, BACK UP	1	1				
80	61A–43864–00	.O-RING	1	1				
81	61A–4384H–10	.SPRING	1	1				

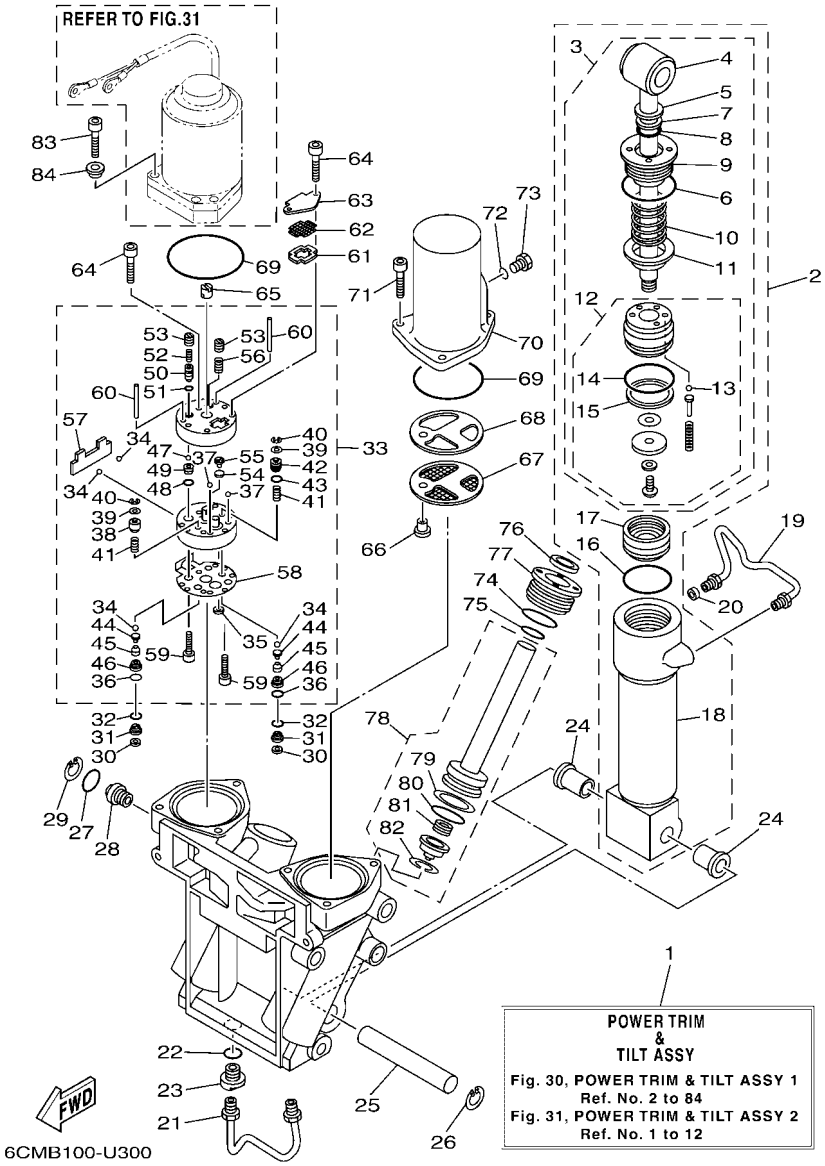

FIG. 30 POWER TRIM & TILT ASSY 1

REF. NO.	PART NO.	DESCRIPTION	XCA	UCA				REMARKS
82	61A–43875–10	.RING, SNAP	1	1				
83	90110–08M05	BOLT, HEXAGON SOCKET HEAD	3	3				
84	6GR–23113–00	COLLAR	3	3				

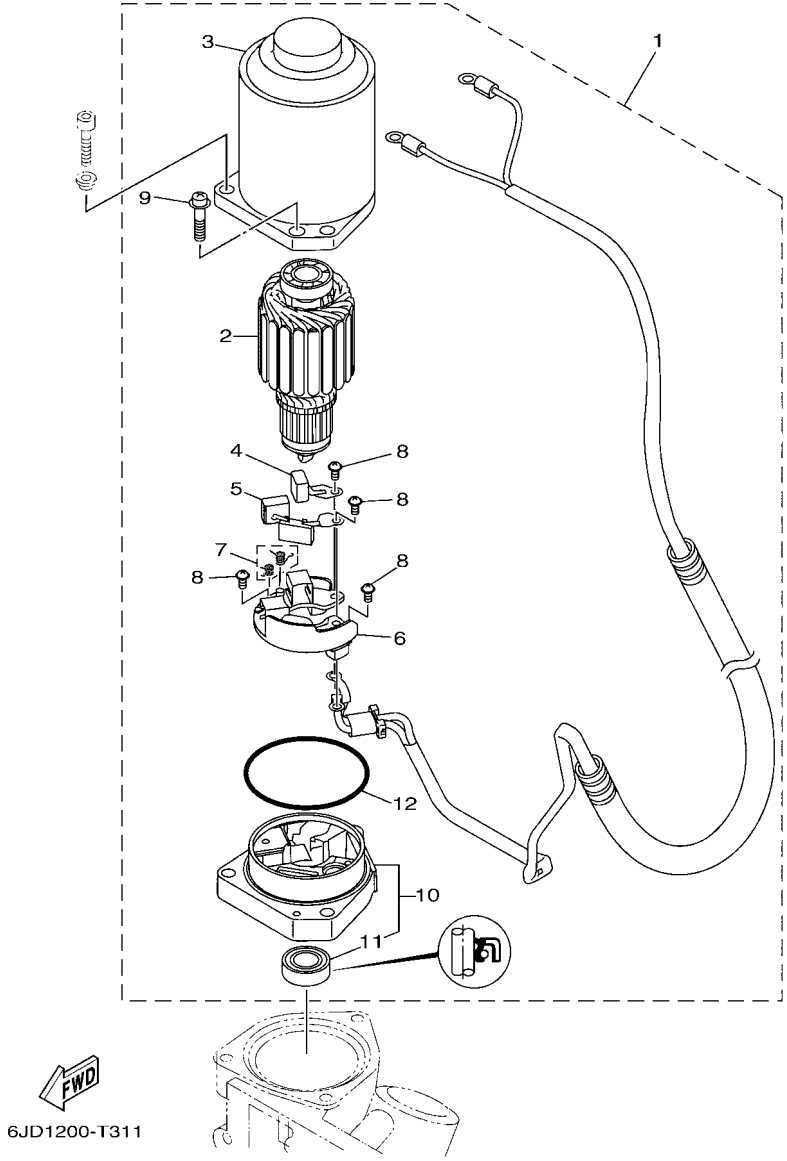

FIG. 31 POWER TRIM & TILT ASSY 2

REF. NO.	PART NO.	DESCRIPTION	XCA	UCA				REMARKS
1	69J–43880–11	MOTOR ASSY	1	1				
2	6GR–43805–00	.ARMATURE ASSY	1	1				
3	6GR–43804–00	.STATOR ASSY	1	1				
4	6GR–43892–00	.BRUSH 2	1	1				
5	6GR–82181–00	.CIRCUIT BREAKER COMP.	1	1				
6	6GR–4380F–00	.PLATE, BRUSH HOLDER	1	1				
7	6GR–4386K–00	.SPRING, BRUSH	1	1				
8	97602–04310	.SCREW, PAN HEAD WITH WASHER	4	4				
9	67C–43879–10	.SCREW, WITH WASHER	2	2				
10	69J–43881–11	.FRAME, END	1	1				
11	6GR–43882–01	..OIL SEAL	1	1				
12	6GR–43864–00	.O-RING	1	1				

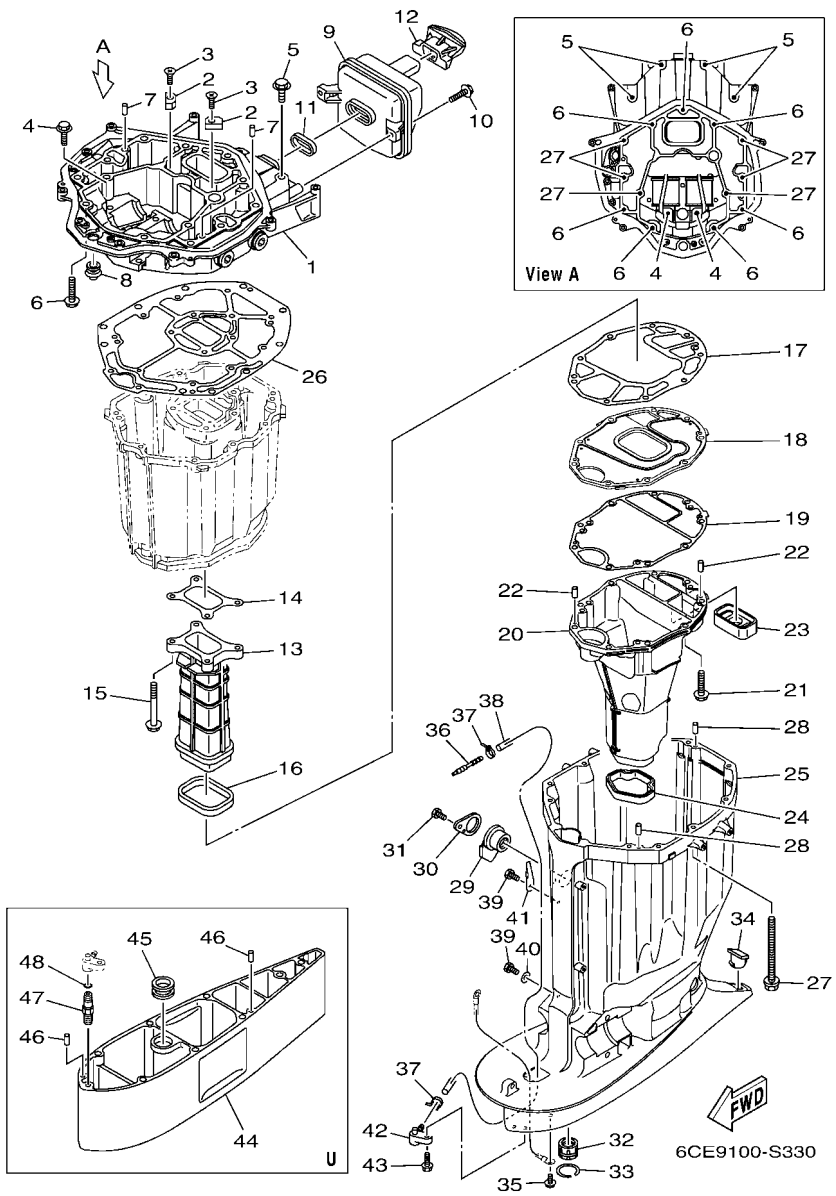

FIG. 32 UPPER CASING

REF. NO.	PART NO.	DESCRIPTION	XCA	UCA				REMARKS
1	6CE–41137–01	GUIDE, EXHAUST	1	1				
2	63P–11325–11	ANODE	2	2				
3	90151–06M02	SCREW, COUNTERSUNK	2	2				
4	90119–08182	BOLT, WITH WASHER	2	2				
5	97E75–10545	BOLT, HEXAGON W/W DEEP RECESS	4	4				
6	97E75–10535	BOLT, HEXAGON W/W DEEP RECESS	7	7				
7	93608–16M16	PIN, DOWEL	2	2				
8	6E5–42724–00	GROMMET	1	1				
9	6CB–14750–A0	SILENCER ASSY	1	1				
10	95D95–06020	BOLT, FLANGE DEEP RECESS	2	2				
11	6CB–14755–00	GASKET, SILENCER	1	1				
12	6CB–42769–01	SEAL, RUBBER	1	1				
13	6CB–41132–01	MANIFOLD, EXHAUST	1	1				
14	6CB–41134–00	GASKET, EXHAUST MANIFOLD	1	1				
15	97E75–08560	BOLT, HEXAGON W/W DEEP RECESS	4	4				
16	6CB–41138–00	SEAL, EXT. 1	1	1				
17	6CB–41135–00	GASKET, EXHAUST MANIFOLD	1	1				
18	6CE–45181–01	PLATE	1	1				
19	6CE–41136–00	GASKET, EXHAUST MANIFOLD 4	1	1				
20	6CE–14711–01	MUFFLER 1	1	1				
21	97E75–08535	BOLT, HEXAGON W/W DEEP RECESS	9	9				
22	93606–19M23	PIN, DOWEL	2	2				
23	6CE–45127–00	SEAL	1	1				
24	6CE–45123–00	GASKET, MUFFLER	1	1				
25	6CE–45111–01–8D	CASING, UPPER	1	1				
26	6CB–45113–01	GASKET, UPPER CASING	1	1				
27	90119–10007	BOLT, WITH WASHER	6	6				

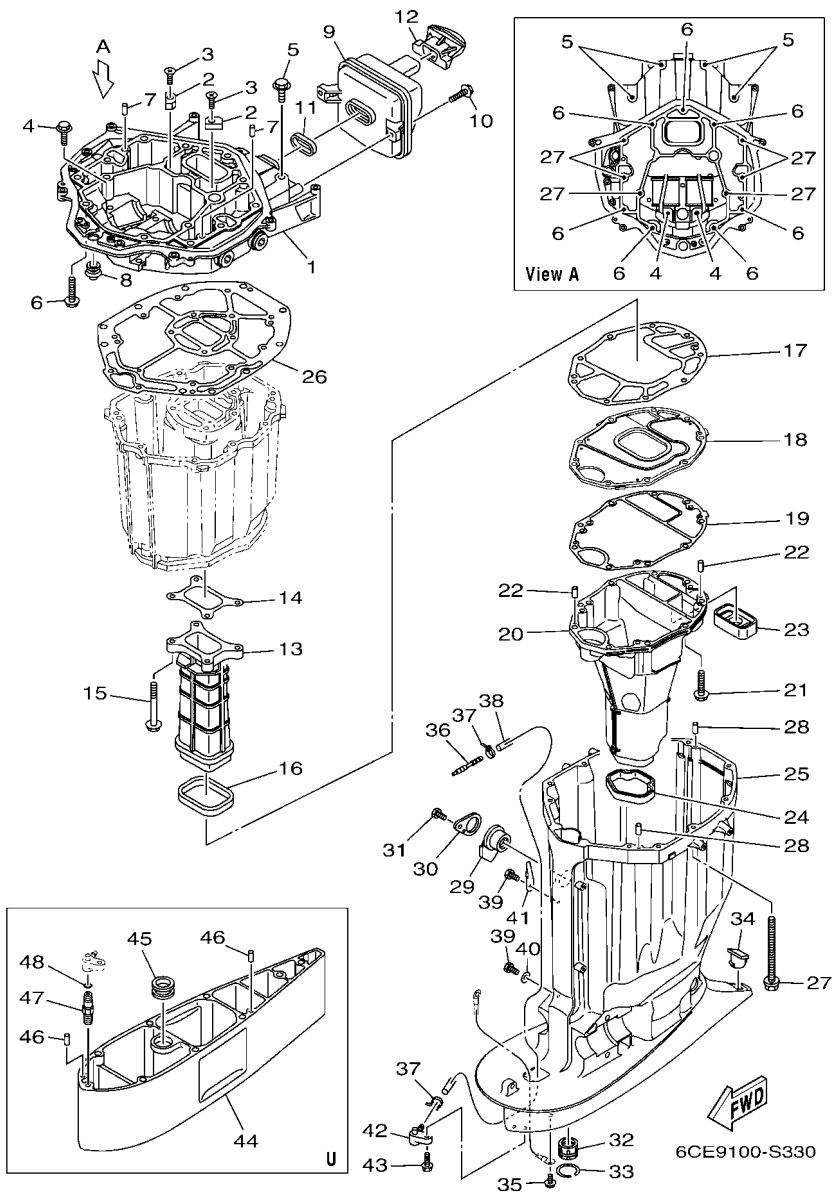

FIG. 32 UPPER CASING

REF. NO.	PART NO.	DESCRIPTION	XCA	UCA				REMARKS
28	93608–16M16	PIN, DOWEL	2	2				
29	6BB–15316–00	DAMPER 1	1	1				
30	6BB–45152–01	COVER, UPPER CASING 2	1	1				
31	97D95–06012	BOLT, HEXAGON DEEP RECESS	1	1				
32	69J–45318–01	BUSHING, DRIVE SHAFT	1	1				
33	93420–36M01	CIRCLIP	1	1				
34	61A–45155–00	CAP	1	1				
35	95D95–06010	BOLT, FLANGE DEEP RECESS	1	1				
36	6E5–83558–00	END, NIPPLE	1	1				
37	90465–11M10	CLAMP	2	2				
38	90445–07032	HOSE (L1920)	1	1				
39	97D95–06010	BOLT, HEXAGON DEEP RECESS	2	2				
40	90201–06M02	WASHER, PLATE	1	1				
41	90462–10061	CLAMP	1	1				
42	63P–45379–00	NIPPLE, HOSE	1	1				
43	90119–06287	BOLT, WITH WASHER	1	1				
44	6CE–45211–10–8D	EXTENSION		1				U(30.3")
45	6AW–44366–00	DAMPER, WATER SEAL 2		1				U(30.3")
46	93608–16M16	PIN, DOWEL		2				U(30.3")
47	63P–45378–00	NIPPLE, HOSE		1				U(30.3")
48	93210–07003	O-RING		1				U(30.3")

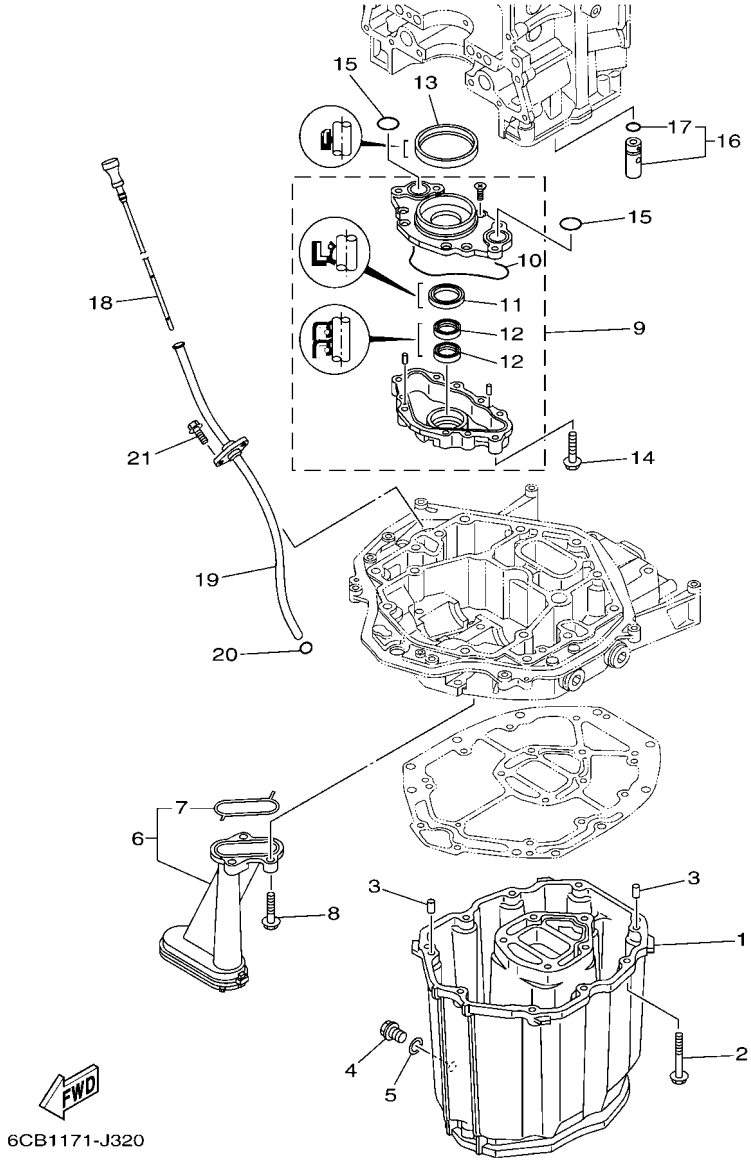

FIG. 33 OIL PAN

REF. NO.	PART NO.	DESCRIPTION	XCA	UCA				REMARKS
1	6CB–15311–01	OIL PAN	1	1				
2	97E75–08535	BOLT, HEXAGON W/W DEEP RECESS	10	10				
3	93608–16M16	PIN, DOWEL	2	2				
4	90340–14M06	PLUG, STRAIGHT SCREW	1	1				
5	90430–14M09	GASKET	1	1				
6	6CB–13411–00	STRAINER, OIL	1	1				
7	6AW–13415–00	.SEAL, OIL STRAINER	1	1				
8	95812–06025	BOLT, FLANGE	3	3				
9	6CB–13300–00	OIL PUMP ASSY	1	1				
10	6CB–13329–00	.GASKET, PUMP COVER	1	1				
11	6AW–13119–00	.OIL SEAL	1	1				
12	69J–13631–00	.OIL SEAL	2	2				
13	6CB–11355–00	SEAL, CYLINDER 1	1	1				
14	95D75–06040	BOLT, FLANGE DEEP RECESS	4	4				
15	93210–26658	O-RING	2	2				
16	6CB–13490–00	RELIEF VALVE ASSY	1	1				
17	6CB–13473–00	.O-RING	1	1				
18	6CB–15362–00	PLUG, OIL LEVEL	1	1				
19	6CB–15377–00	GUIDE, INLET	1	1				
20	93210–19MJ3	O-RING	1	1				
21	95D95–06016	BOLT, FLANGE DEEP RECESS	2	2				

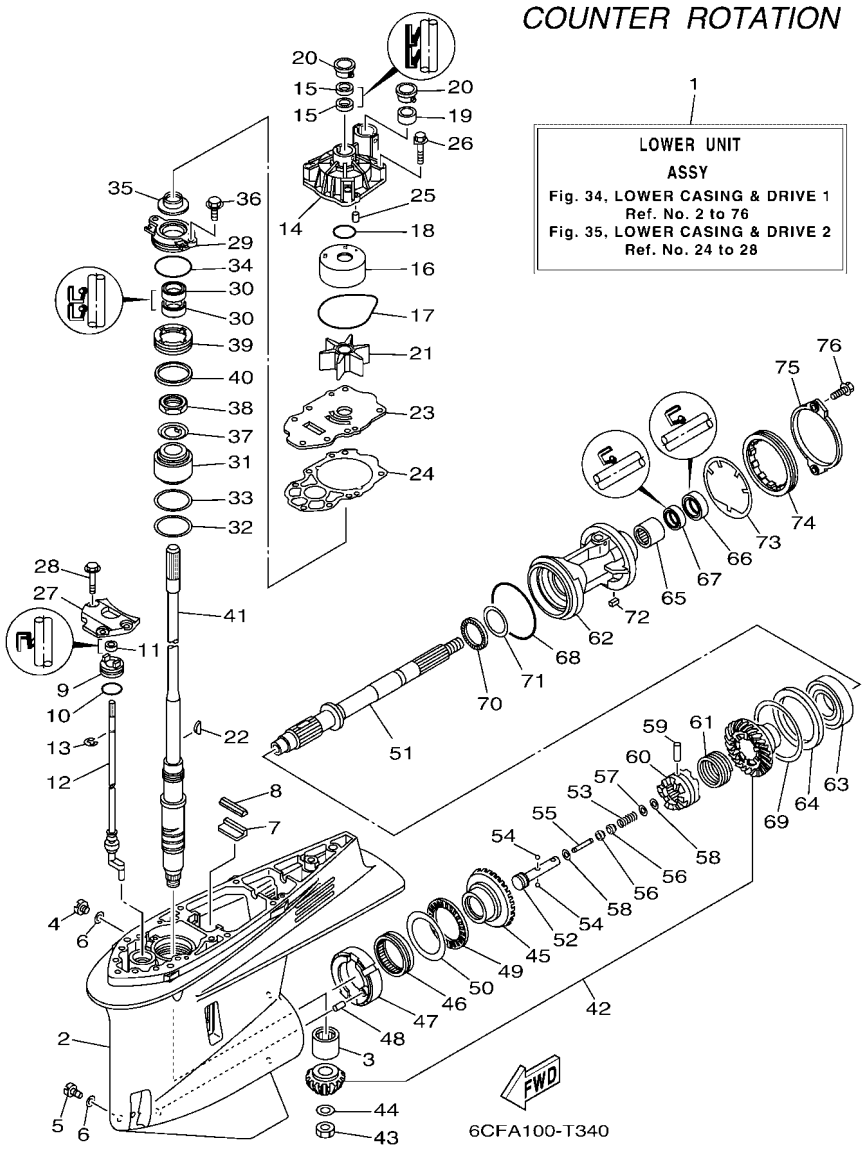

FIG. 34 LOWER CASING & DRIVE 1

REF. NO.	PART NO.	DESCRIPTION	XCA	UCA				REMARKS
1	6CF–45300–04–8D	LOWER UNIT ASSY	1					X(25.3"),LH
	6CF–45300–14–8D	LOWER UNIT ASSY		1				U(30.3"),LH
2	6CE–45301–00–8D	CASING, LOWER	1	1				
3	93311–83280	BEARING	1	1				
4	90340–08002	PLUG, STRAIGHT SCREW	1	1				
5	688–45341–10	PLUG, DRAIN	1	1				
6	90430–08003	GASKET	2	2				
7	663–45376–00	GUIDE, SEAL DAMPER	1	1				
8	6CE–45375–00	DAMPER, SEAL	1	1				
9	6CE–45321–10	PLATE	1					X(25.3")
	6CE–45321–20	PLATE		1				U(30.3")
10	93210–33M49	O-RING	1	1				
11	93106–09014	OIL SEAL	1					X(25.3")
	93106–10001	OIL SEAL		1				U(30.3")
12	6CF–44150–00	SHIFT CAM ASSY	1					X(25.3"),LH
	6CF–44150–10	SHIFT CAM ASSY		1				U(30.3"),LH
13	99001–08600	CIRCLIP	1					X(25.3")
	99001–09600	CIRCLIP		1				U(30.3")
14	6CE–44311–01	HOUSING, WATER PUMP	1	1				
15	93104–22M07	OIL SEAL	2	2				
16	6AW–44322–00	INSERT, CARTRIDGE	1	1				
17	93210–94003	O-RING	1	1				
18	93210–37160	O-RING	1	1				
19	6AW–44365–00	DAMPER, WATER SEAL 1	1	1				
20	6AW–44312–00	COVER, WATER PUMP HOUSING	2	2				
21	6CE–44352–00	IMPELLER	1	1				
22	90280–04002	KEY, WOODRUFF	1	1				

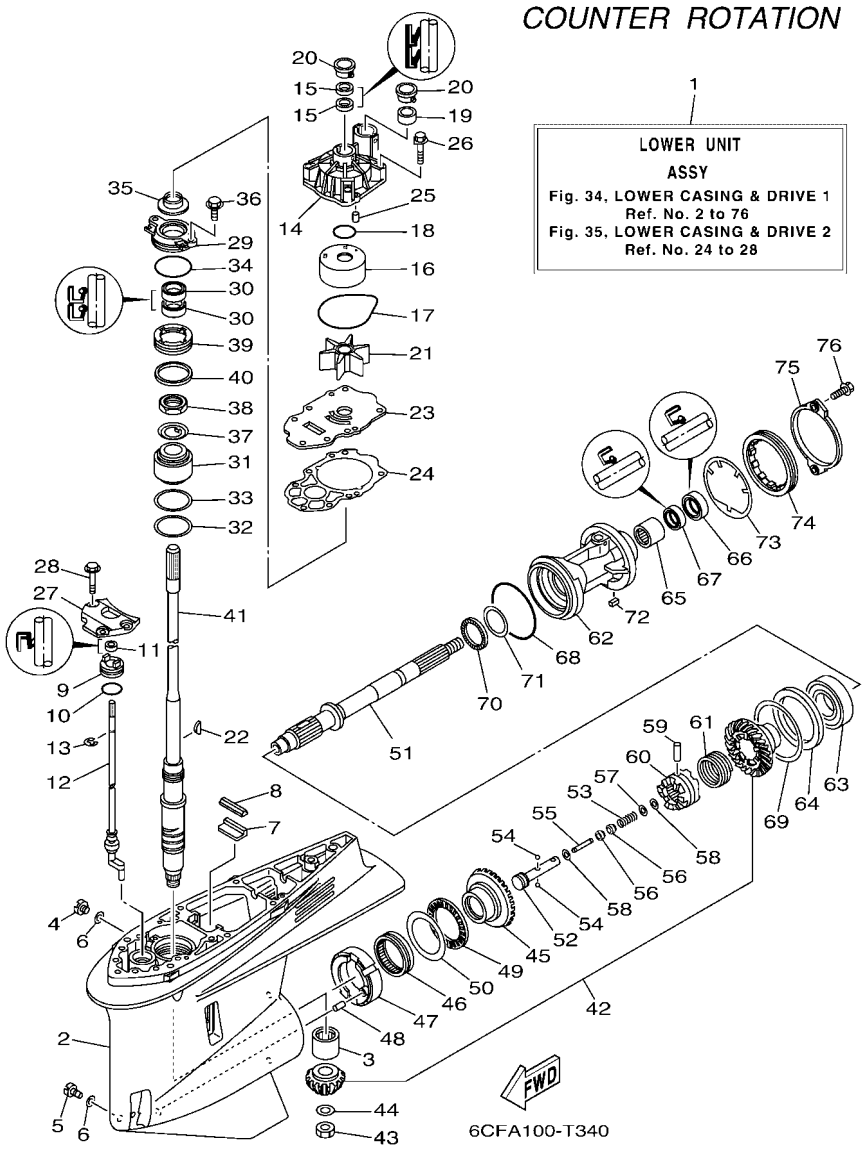

FIG. 34 LOWER CASING & DRIVE 1

REF. NO.	PART NO.	DESCRIPTION	XCA	UCA				REMARKS
23	6CE–44323–01	OUTER PLATE, CARTRIDGE	1	1				
24	6CE–44315–00	GASKET, WATER PUMP	1	1				
25	93606–12019	PIN, DOWEL	2	2				
26	90119–08M14	BOLT, WITH WASHER	4	4				
27	6CB–44312–00	COVER, WATER PUMP HOUSING	1	1				
28	90119–08M32	BOLT, WITH WASHER	3	3				
29	6CE–45335–00–9S	HOUSING, OIL SEAL	1	1				
30	93101–28019	OIL SEAL	2	2				
31	93399–99966	BEARING	1	1				
32	90201–62008	WASHER, PLATE	1	1				
33	6CE–45587–00	SHIM (T:0.10MM)	1	1				UR
	6CE–45587–10	SHIM (T:0.12MM)	1	1				UR
	6CE–45587–20	SHIM (T:0.15MM)	1	1				UR
	6CE–45587–30	SHIM (T:0.18MM)	1	1				UR
	6CE–45587–40	SHIM (T:0.30MM)	1	1				UR
	6CE–45587–50	SHIM (T:0.40MM)	1	1				UR
	6CE–45587–60	SHIM (T:0.50MM)	1	1				UR
34	93210–64488	O-RING	1	1				
35	6AW–45344–00	COVER, OIL SEAL	1	1				
36	97E95–08520	BOLT, HEXAGON W/W DEEP RECESS	2	2				
37	90214–30003	WASHER, CLAW	1	1				
38	90170–30M18	NUT	1	1				
39	6CE–45244–00	NUT	1	1				
40	6CE–45539–00	SPACER 2	1	1				
41	6CE–45501–00	DRIVE SHAFT COMP.	1					X(25.3")
	6CE–45501–10	DRIVE SHAFT COMP.		1				U(30.3")
42	6CF–45550–00	GEAR SET	1	1				

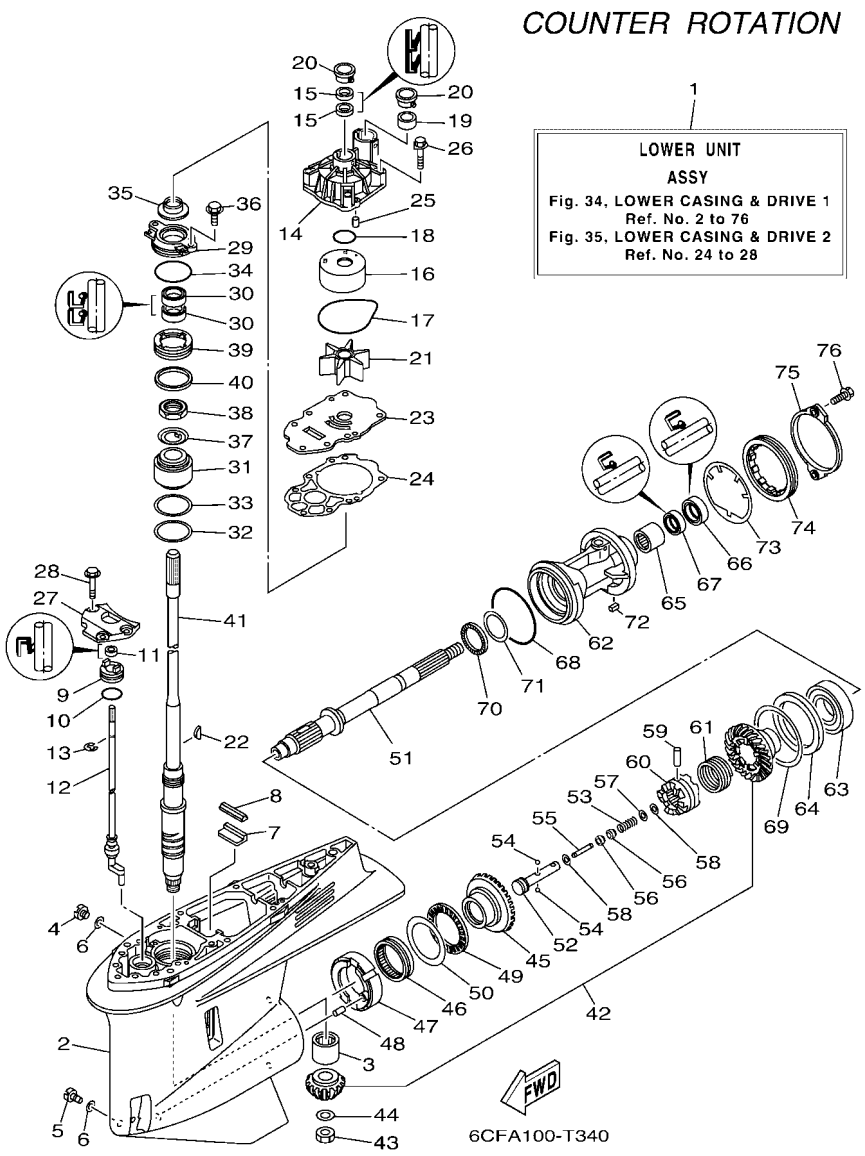

FIG. 34 LOWER CASING & DRIVE 1

REF. NO.	PART NO.	DESCRIPTION	XCA	UCA				REMARKS
43	90170–16M19	NUT	1	1				
44	90201–16M00	WASHER, PLATE	1	1				
45	6CF–45560–01	GEAR 1 (21T)	1	1				
46	93311–85894	BEARING	1	1				
47	6CB–45824–00	ADAPTER	1	1				
48	93608–16M16	PIN, DOWEL	1	1				
49	93340–67011	BEARING	1	1				
50	6CB–45567–00	SHIM (T:2.00MM)	1	1				UR
	6CB–45567–10	SHIM (T:2.03MM)	1	1				UR
	6CB–45567–20	SHIM (T:2.06MM)	1	1				UR
	6CB–45567–30	SHIM (T:2.09MM)	1	1				UR
	6CB–45567–40	SHIM (T:2.12MM)	1	1				UR
	6CB–45567–50	SHIM (T:2.15MM)	1	1				UR
51	6CF–45611–01	SHAFT, PROPELLER	1	1				
52	6CB–45634–00	SLIDE, SHIFT	1	1				
53	90501–10M77	SPRING, COMPRESSION	1	1				
54	93501–04011	BALL	2	2				
55	6H1–45668–00	SHAFT, FREE 1	1	1				
56	61A–45635–00	PLUNGER, SHIFT	2	2				
57	90201–02M00	WASHER, PLATE	1	1				
58	90183–02M03	NUT, SPRING	2	2				
59	90250–08M07	PIN, STRAIGHT	1	1				
60	6CE–45631–00	CLUTCH, DOG	1	1				
61	6E5–45633–01	RING, CROSS PIN	1	1				
62	6CF–45332–01–CA	HOUSING, BEARING	1	1				
63	93332–00048	BEARING	1	1				
64	6CF–45576–00	WASHER, THRUST 2	1	1				

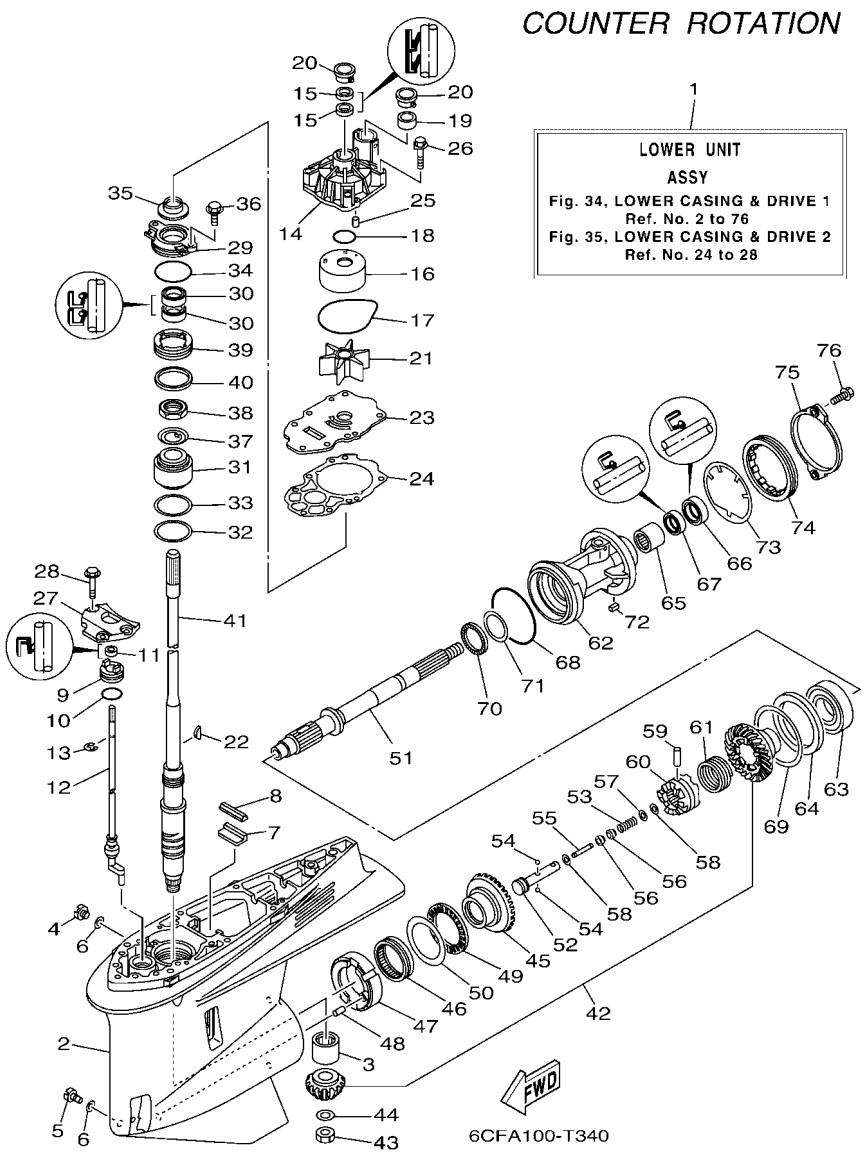

FIG. 34 LOWER CASING & DRIVE 1

REF. NO.	PART NO.	DESCRIPTION	XCA	UCA				REMARKS
65	93315–43061	BEARING	1	1				
66	93101–30030	OIL SEAL	1	1				
67	93101–30019	OIL SEAL	1	1				
68	93211–02001	O-RING	1	1				
69	6CB–45577–00	SHIM (T:0.10MM)	1	1				UR
	6CB–45577–10	SHIM (T:0.12MM)	1	1				UR
	6CB–45577–20	SHIM (T:0.15MM)	1	1				UR
	6CB–45577–30	SHIM (T:0.18MM)	1	1				UR
	6CB–45577–40	SHIM (T:0.30MM)	1	1				UR
	6CB–45577–50	SHIM (T:0.40MM)	1	1				UR
	6CB–45577–60	SHIM (T:0.50MM)	1	1				UR
70	93341–440U5	BEARING	1	1				
71	6K1–45578–01	SHIM (T:0.10MM)	1	1				UR
	6K1–45578–10	SHIM (T:0.12MM)	1	1				UR
	6K1–45578–20	SHIM (T:0.15MM)	1	1				UR
	6K1–45578–30	SHIM (T:0.18MM)	1	1				UR
	6K1–45578–40	SHIM (T:0.30MM)	1	1				UR
	6K1–45578–50	SHIM (T:0.40MM)	1	1				UR
	6K1–45578–60	SHIM (T:0.50MM)	1	1				UR
72	90282–05008	KEY, STRAIGHT	1	1				
73	6CB–45383–00	WASHER, CLAW	1	1				
74	6CB–45384–00	NUT	1	1				
75	6CE–45361–10	CAP, LOWER CASING	1	1				
76	90105–08M61	BOLT, FLANGE	2	2				

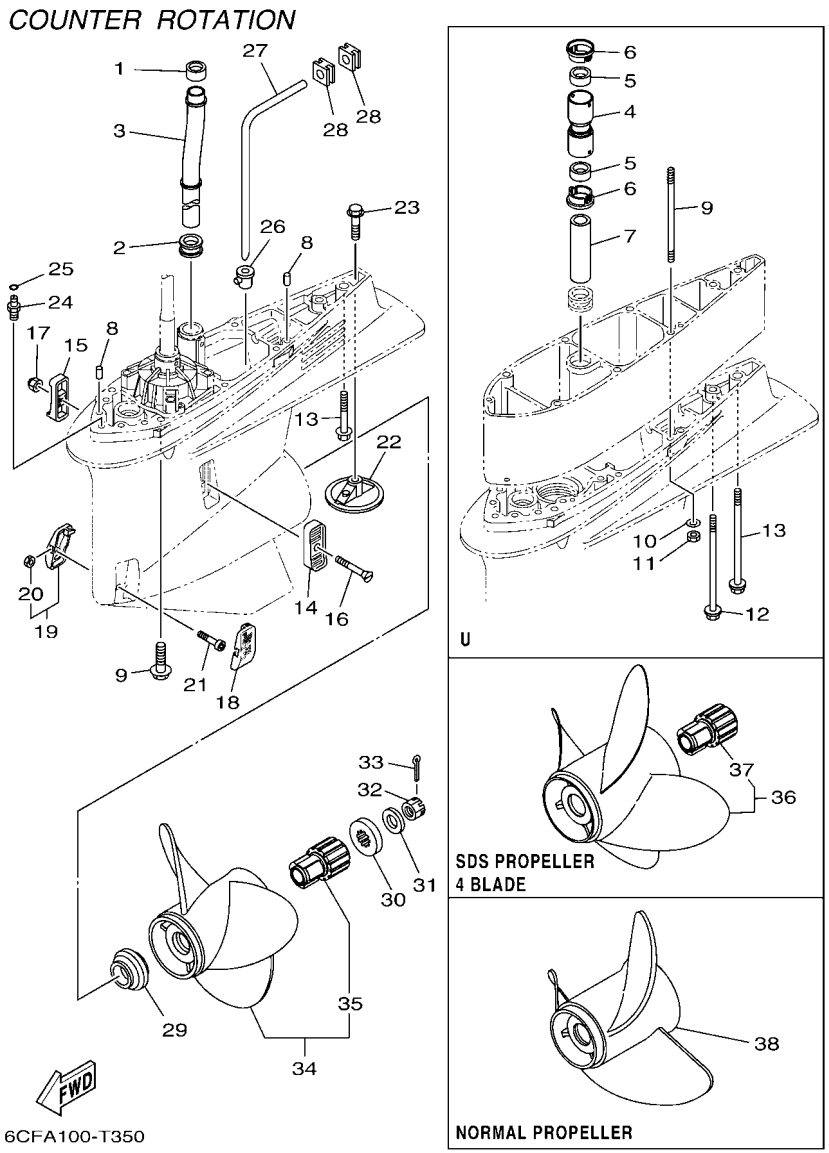

FIG. 35 LOWER CASING & DRIVE 2

REF. NO.	PART NO.	DESCRIPTION	XCA	UCA				REMARKS
1	6AW–44365–00	DAMPER, WATER SEAL 1	1	1				
2	6AW–44366–00	DAMPER, WATER SEAL 2	1	1				
3	6CE–44361–00	TUBE, WATER 1	1	1				
4	6CE–44362–00	TUBE, WATER 2		1				U(30.3")
5	6AW–44365–00	DAMPER, WATER SEAL 1		2				U(30.3")
6	6AW–44312–00	COVER, WATER PUMP HOUSING		2				U(30.3")
7	6AW–44363–00	TUBE, WATER 3		1				U(30.3")
8	93608–16M16	PIN, DOWEL	2	2				
9	90119–10038	BOLT, WITH WASHER	7					X(25.3")
	90116–10041	BOLT, STUD		6				U(30.3")
10	90201–10048	WASHER, PLATE		6				U(30.3")
11	90170–10009	NUT		6				U(30.3")
12	90119–10009	BOLT, WITH WASHER		1				U(30.3")
13	97E75–10570	BOLT, HEXAGON W/W DEEP RECESS	1					X(25.3")
	90119–10008	BOLT, WITH WASHER		1				U(30.3")
14	6P2–45214–00	COVER, WATER INLET 1	1	1				
15	6P2–45215–00	COVER, WATER INLET 2	1	1				
16	90152–05M08	SCREW, COUNTERSUNK	1	1				
17	90185–05002	NUT, NYLON	1	1				
18	6CE–45224–00	COVER, WATER INLET 3	1	1				
19	6CE–45225–00	COVER, WATER INLET 4	1	1				
20	90185–05002	.NUT, NYLON	1	1				
21	90110–05039	BOLT, HEXAGON SOCKET HEAD	1	1				
22	6CE–45373–00	ANODE	1	1				
23	90105–10M00	BOLT, FLANGE	1	1				
24	63P–45378–00	NIPPLE, HOSE	1	1				
25	93210–07003	O-RING	1	1				

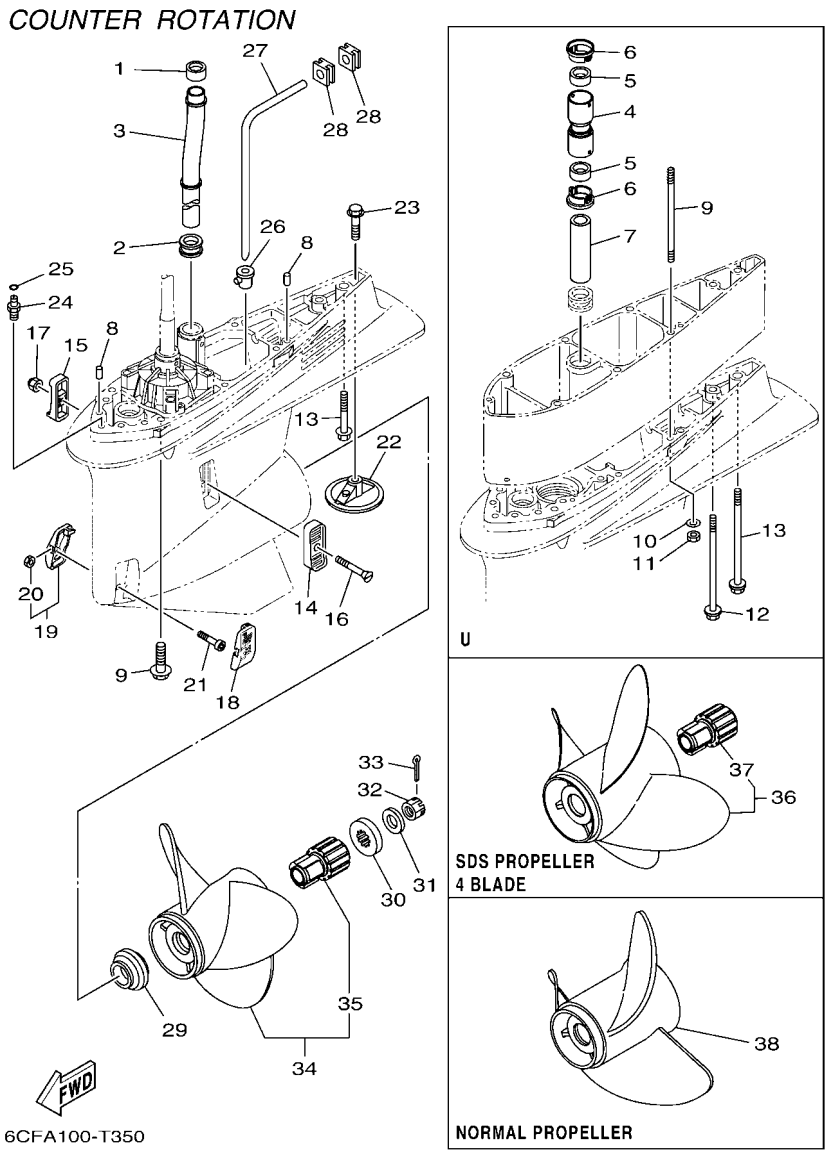

FIG. 35 LOWER CASING & DRIVE 2

REF. NO.	PART NO.	DESCRIPTION	XCA	UCA				REMARKS
26	6D0–44367–00	DAMPER, WATER SEAL 3	1	1				
27	6D0–44362–01	TUBE, WATER 2	1	1				
28	6D0–44366–00	DAMPER, WATER SEAL 2	2	2				
29	69J–45987–00	SPACER 1	1	1				
30	688–45997–01	SPACER 2	1	1				
31	92990–18200	WASHER	1	1				
32	90171–18M04	NUT, CASTLE	1	1				
33	91490–40030	PIN. COTTER	1	1				
34	6CF–45930–20	PROPELLER (3X15-3/4"X13"-TL)	1	1				UR SDS 3 BLADE
	6CF–45976–20	PROPELLER (3X15-3/4"X15"-TL)	1	1				UR SDS 3 BLADE
	6CF–45978–20	PROPELLER (3X15-1/2"X17"-TL)	1	1				UR SDS 3 BLADE
	6CF–45970–20	PROPELLER (3X15-1/4"X19"-TL)	1	1				UR SDS 3 BLADE
	6CF–45972–20	PROPELLER (3X15"X21"-TL)	1	1				UR SDS 3 BLADE
	6CF–45974–20	PROPELLER (3X14-3/4"X23"-TL)	1	1				UR SDS 3 BLADE
35	6CE–45C81–10	.DAMPER RUBBER, PROPELLER 1	1	1				
36	6CF–45B70–20	PROPELLER (4X15"X21"-TL)	1	1				UR SDS 4 BLADE
	6CF–45B72–20	PROPELLER (4X15"X22"-TL)	1	1				UR SDS 4 BLADE
	6CF–45B74–20	PROPELLER (4X15"X23"-TL)	1	1				UR SDS 4 BLADE
37	6CE–45C81–10	.DAMPER RUBBER, PROPELLER 1	1	1				
38	6D1–45970–10	PROPELLER (3X15-1/4"X19"-TL)	1	1				AP NORMAL PROP.

FIG. 36 OPTIONAL PARTS 1

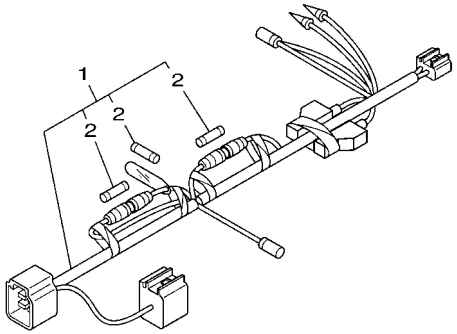

6AX4110-K350

REF. NO.	PART NO.	DESCRIPTION	XCA	UCA				REMARKS
1	6Y8–81315–02	LEAD WIRE ASSY	1	1				
2	6TA–82151–01	.FUSE(5A)	3	3				

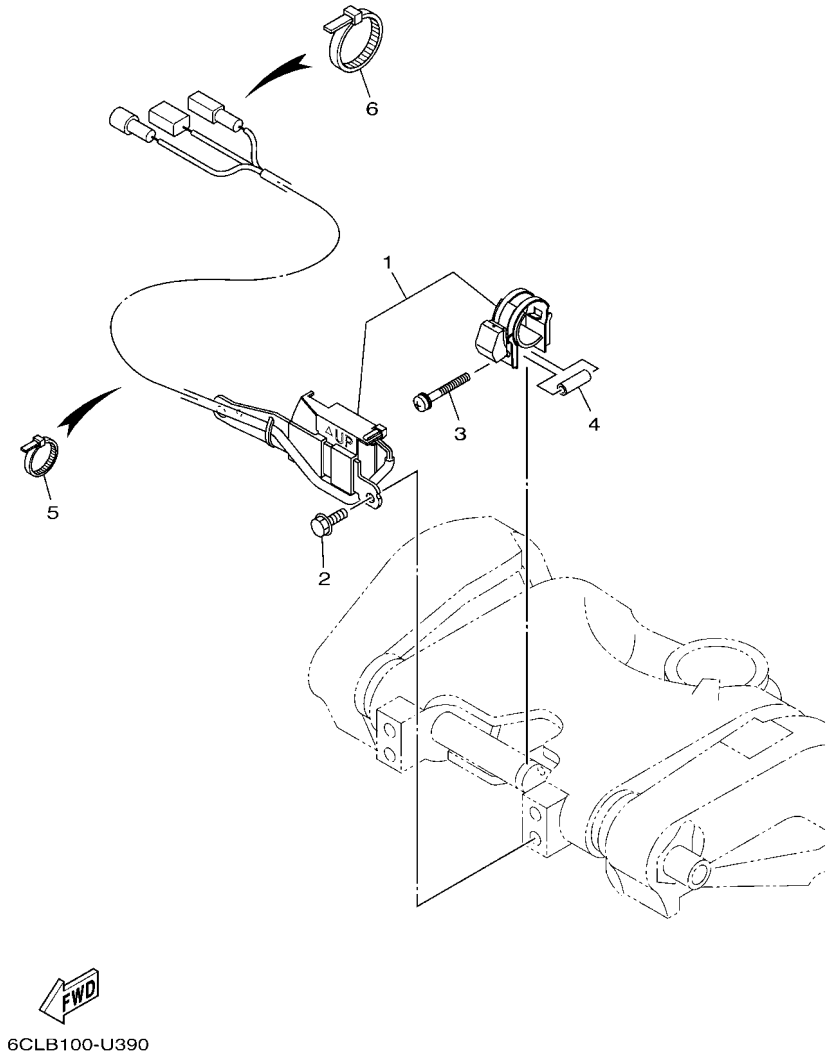

FIG. 37 OPTIONAL PARTS 2

REF. NO.	PART NO.	DESCRIPTION	XCA	UCA				REMARKS
1	6CE–825E0–01	TILT LIMIT SWITCH ASSY	1	1				
2	97E95–06516	BOLT, HEXAGON W/W DEEP RECESS	2	2				
3	90159–05059	SCREW, WITH WASHER	1	1				
4	90387–05004	COLLAR	1	1				
5	90465–11M10	CLAMP	9	9				
6	90465–13M18	CLAMP	1	1				

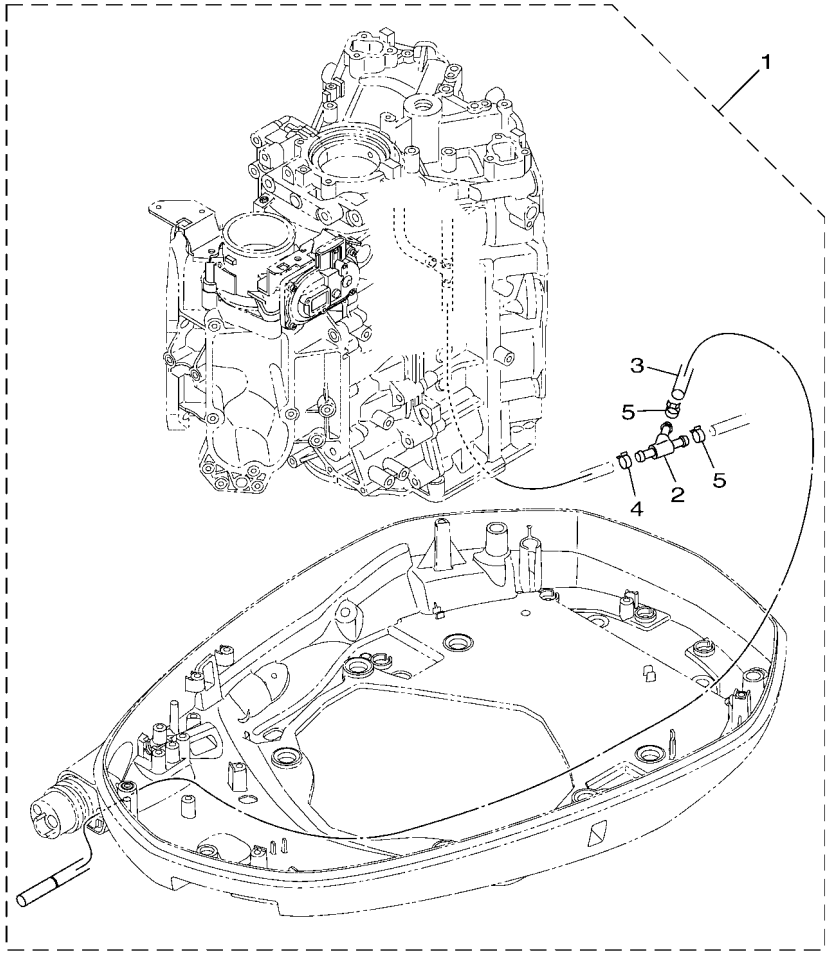

6CLB100-U400

FIG. 38 OPTIONAL PARTS 3

REF. NO.	PART NO.	DESCRIPTION	XCA	UCA				REMARKS
1	*	FLUSHING HOSE KIT	1	1				LM
2	6DA–13758–00	.PIPE, JOINT	1	1				
3	6CE–14987–00	.HOSE	1	1				
4	90467–140A8	.CLIP	1	1				
5	90467–140A9	.CLIP	2	2				

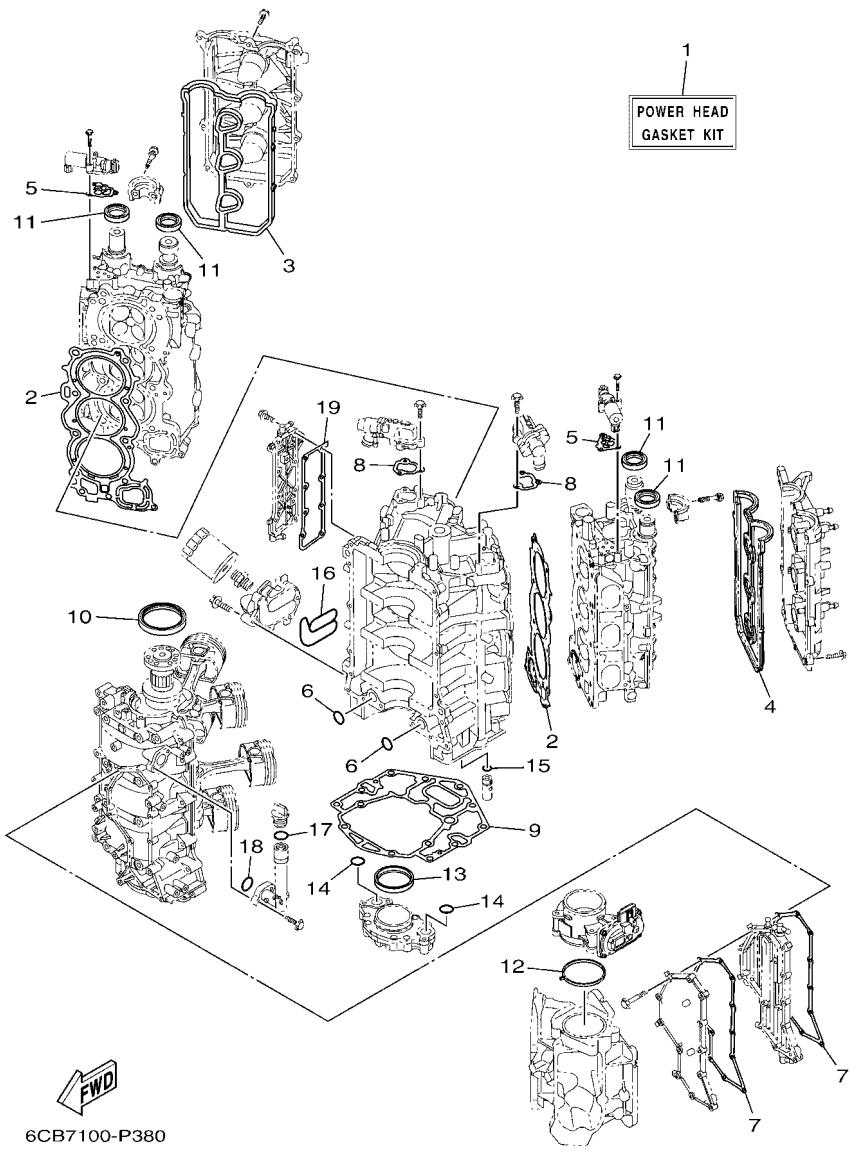

FIG. 39 REPAIR KIT 1

REF. NO.	PART NO.	DESCRIPTION	XCA	UCA				REMARKS
1	6CB–W0001–03	POWER HEAD GASKET KIT	1	1				
2	6CB–11181–00	.GASKET, CYLINDER HEAD 1	2	2				
3	6CB–11193–00	.GASKET, HEAD COVER 1	1	1				
4	6CB–11194–00	.GASKET, HEAD COVER 2	1	1				
5	6CB–1242F–00	.GASKET, FILTER	2	2				
6	93210–26658	.O-RING	2	2				
7	6CB–15451–01	.GASKET, CRANKCASE COVER 1	2	2				
8	6CB–12427–11	.GASKET, HOUSING COVER 1	2	2				
9	6CB–11351–00	.GASKET, CYLINDER	1	1				
10	93102–85008	.OIL SEAL	1	1				
11	93102–38008	.OIL SEAL	4	4				
12	6CB–13556–00	.GASKET, MANIFOLD	1	1				
13	6CB–11355–00	.SEAL, CYLINDER 1	1	1				
14	93210–26658	.O-RING	2	2				
15	6CB–13473–00	.O-RING	1	1				
16	6CB–13477–00	.GASKET	1	1				
17	93210–24M79	.O-RING	1	1				
18	93210–27370	.O-RING	1	1				
19	6CB–1131B–00	.GASKET, COVER	1	1				

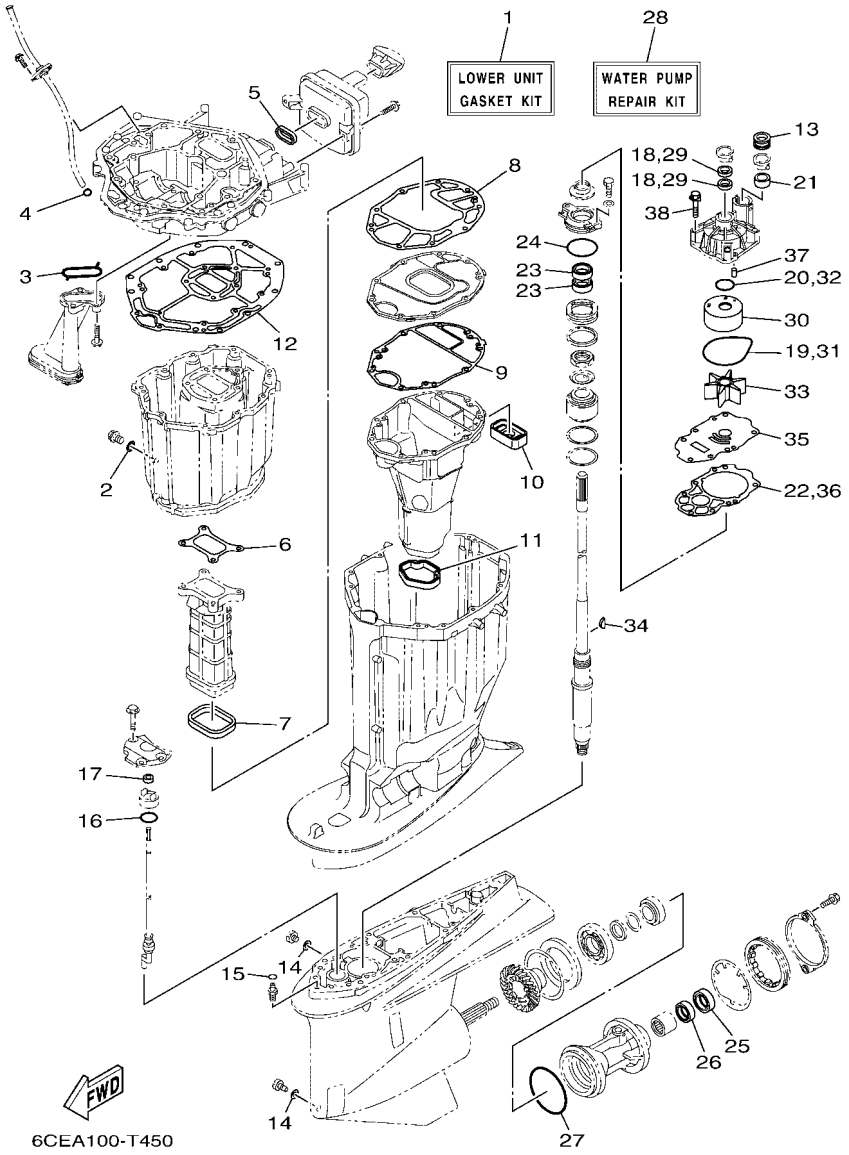

FIG. 40 REPAIR KIT 2

REF. NO.	PART NO.	DESCRIPTION	XCA	UCA				REMARKS
1	6CE–W0001–23	LOWER UNIT GASKET KIT	1	1				
2	90430–14M09	.GASKET	1	1				
3	6AW–13415–00	.SEAL, OIL STRAINER	1	1				
4	93210–19MJ3	.O-RING	1	1				
5	6CB–14755–00	.GASKET, SILENCER	1	1				
6	6CB–41134–00	.GASKET, EXHAUST MANIFOLD	1	1				
7	6CB–41138–00	.SEAL, EXT. 1	1	1				
8	6CB–41135–00	.GASKET, EXHAUST MANIFOLD	1	1				
9	6CE–41136–00	.GASKET, EXHAUST MANIFOLD 4	1	1				
10	6CE–45127–00	.SEAL	1	1				
11	6CE–45123–00	.GASKET, MUFFLER	1	1				
12	6CB–45113–01	.GASKET, UPPER CASING	1	1				
13	6AW–44366–00	.DAMPER, WATER SEAL 2	1	1				
14	90430–08003	.GASKET	2	2				
15	93210–07003	.O-RING	1	1				
16	93210–33M49	.O-RING	1	1				
17	93106–09014	.OIL SEAL	1	1				FOR X(25.3")
	93106–10001	.OIL SEAL	1	1				FOR U(30.3")
18	93104–22M07	.OIL SEAL	2	2				
19	93210–94003	.O-RING	1	1				
20	93210–37160	.O-RING	1	1				
21	6AW–44365–00	.DAMPER, WATER SEAL 1	1	1				
22	6CE–44315–00	.GASKET, WATER PUMP	1	1				
23	93101–28019	.OIL SEAL	2	2				
24	93210–64488	.O-RING	1	1				
25	93101–30030	.OIL SEAL	1	1				
26	93101–30019	.OIL SEAL	1	1				

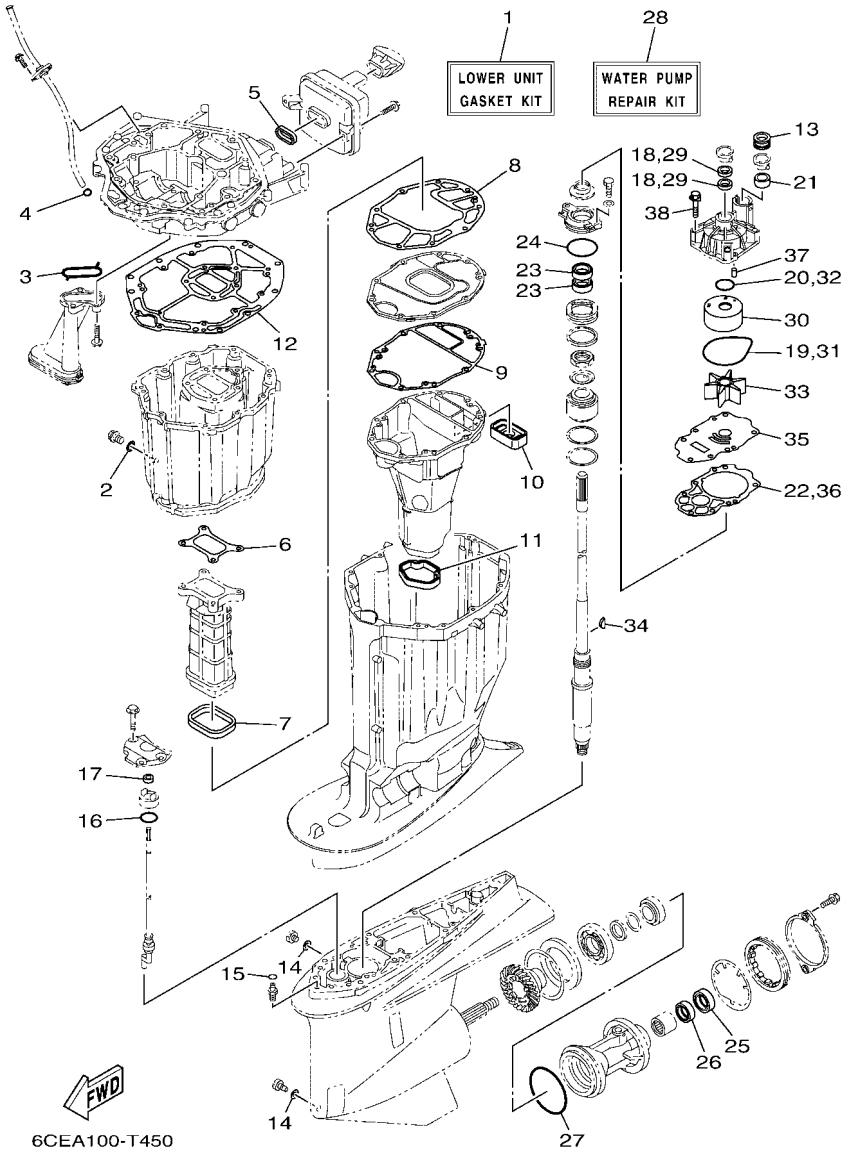

FIG. 40 REPAIR KIT 2

REF. NO.	PART NO.	DESCRIPTION	XCA	UCA				REMARKS
27	93211–02001	.O-RING	1	1				
28	6CE–W0078–01	WATER PUMP REPAIR KIT	1	1				
29	93104–22M07	.OIL SEAL	2	2				
30	6AW–44322–00	.INSERT, CARTRIDGE	1	1				
31	93210–94003	.O-RING	1	1				
32	93210–37160	.O-RING	1	1				
33	6CE–44352–00	.IMPELLER	1	1				
34	90280–04002	.KEY, WOODRUFF	1	1				
35	6CE–44323–01	.OUTER PLATE, CARTRIDGE	1	1				
36	6CE–44315–00	.GASKET, WATER PUMP	1	1				
37	93606–12019	.PIN, DOWEL	2	2				
38	90119–08M14	.BOLT, WITH WASHER	4	4				

PART NO.	REF. NO.
6CE–11000–03	3 – 1
6CE–11110–12–9S	5 – 2
6CE–11120–12–9S	5 – 12
6S5–11133–10	5 – 3
	5 – 13
6CB–11181–00	5 – 25
	39 – 2
6CB–11191–02	5 – 30
6CB–11192–02	5 – 34
6CB–11193–00	5 – 31
	39 – 3
6CB–11194–00	5 – 35
	39 – 4
67F–11301–00	5 – 19
6CB–1131B–00	3 – 12
	39 – 19
6CE–1131C–00–9S	3 – 9
68T–11325–00	1 – 4
	3 – 32
63P–11325–01	1 – 1
	3 – 10
	3 – 19
67F–11325–01	1 – 7
	5 – 20
63P–11325–11	1 – 16
	32 – 2
67F–11328–00	5 – 21
6AW–1132N–01	1 – 5
	3 – 34
6AW–1132P–00	1 – 3
	3 – 30
6CB–11351–00	3 – 29
	39 – 9
6CB–11355–00	33 – 13
	39 – 13
6CB–1135A–00	6 – 6
6CB–11410–00	4 – 1
6CB–11416–00	4 – 5
6CB–11416–10	4 – 5
6CB–11416–20	4 – 5
6CB–11416–30	4 – 5
6CB–11416–40	4 – 5
6CB–11417–00	4 – 6
6CB–11417–10	4 – 6
6CB–11417–20	4 – 6
6CB–11417–30	4 – 6
6CB–11417–40	4 – 6
6CB–11426–03	4 – 7

PART NO.	REF. NO.
6CB–11427–03	4 – 8
6CB–11478–00	4 – 2
6CB–1149A–00	6 – 10
6CB–11567–00	8 – 17
6CB–11590–02	8 – 28
6CB–11603–00	4 – 12
6CE–11631–02	4 – 11
6CB–11633–00	4 – 13
63P–11654–10	4 – 10
6JD–11656–00	4 – 14
6JD–11656–10	4 – 14
6JD–11656–20	4 – 14
6CB–11998–00	5 – 42
6CB–11999–00	5 – 43
6CB–12111–00	8 – 1
6CB–12113–00	8 – 4
51Y–12119–00	8 – 7
6DA–12121–00	8 – 2
6CB–12171–00	8 – 9
6CB–12172–00	8 – 13
6CB–12181–00	8 – 11
6CB–12182–00	8 – 15
6CE–12411–00	1 – 2
	3 – 21
67F–12412–00	3 – 22
6CE–12413–A0–9S	3 – 24
6CE–12413–B0–9S	3 – 23
6CB–12422–10–9S	3 – 25
6CB–12427–11	3 – 26
	39 – 8
6CB–1242F–00	6 – 2
	39 – 5
6CB–1243E–00	7 – 15
6CE–1244G–00	7 – 12
6CE–1244H–00	7 – 14
6CE–12481–10	18 – 24
6CE–12482–10	10 – 8
6CE–12483–00	18 – 18
6CB–12483–01	10 – 26
6CB–12484–00	10 – 10
6CE–12485–00	18 – 26
6CE–1248A–00	18 – 16
6AW–12572–00	25 – 18
6CB–12576–10	7 – 3
6CB–12577–00	7 – 8
6R3–12581–00	25 – 19
6AW–12582–00	25 – 20
6R3–12583–00	25 – 21

PART NO.	REF. NO.
6P2–12615–00	8 – 25
6P2–12623–00	8 – 20
	8 – 23
6CB–12645–01	8 – 19
6CB–1264A–01	8 – 22
6P2–12663–00	8 – 21
	8 – 24
6CB–13016–00	1 – 10
	13 – 5
6AW–13119–00	33 – 11
6AW–13132–00	13 – 32
6CB–13161–10	12 – 1
6CB–13171–10	12 – 5
6CB–13300–00	33 – 9
6CB–13329–00	33 – 10
6CB–13411–00	33 – 6
6AW–13415–00	33 – 7
	40 – 3
6CE–13437–61	17 – 18
N26–13440–03	1 – 6
	3 – 36
6CE–13446–10–9S	3 – 38
6CB–13473–00	33 – 17
	39 – 15
6CB–13477–00	3 – 39
	39 – 16
6CB–13490–00	33 – 16
6CB–13532–10	10 – 2
6CB–13533–00	10 – 1
6CB–13545–00	10 – 18
6CB–13546–01	10 – 22
6CB–13547–00	10 – 23
6CB–13548–00	10 – 25
6CB–13556–00	11 – 3
	39 – 12
68V–13577–00	14 – 4
6CB–13577–00	12 – 4
	12 – 8
6CB–13593–00	13 – 22
69J–13631–00	33 – 12
6CE–13641–00	9 – 5
6CB–13645–00	9 – 6
6CB–13646–00	9 – 7
6CB–13711–00	11 – 2
63P–13716–00	13 – 21
6CB–13751–10	11 – 1
6DA–13758–00	38 – 2
6AW–13761–00	12 – 2

PART NO.	REF. NO.
6AW–13761–00	12 – 6
6AW–13781–00	13 – 34
6CB–13782–00	10 – 16
6AW–13784–00	13 – 35
6CB–13898–11	11 – 8
6CB–13898–20	11 – 7
6CB–13906–01	13 – 8
6CB–13907–11	13 – 23
63P–13915–00	1 – 11
	13 – 24
6CB–13971–01	14 – 10
6CB–13972–00	14 – 12
6CB–13974–01	14 – 11
6AW–1410B–00	12 – 3
	12 – 7
69J–14137–00	14 – 3
6CB–14146–00	13 – 10
6P2–14149–00	14 – 2
6CB–14180–12	13 – 1
6CB–14181–01	13 – 15
6CB–14182–02	13 – 2
6P2–14191–00	13 – 16
68V–14216–00	13 – 12
6CB–14216–00	13 – 6
6CB–14239–00	13 – 17
6P2–14386–00	13 – 37
6AW–1441J–00	9 – 11
6CB–14429–01	13 – 19
6CE–14435–00	21 – 32
6CB–14440–01	9 – 9
6CB–1447B–00	13 – 33
6CB–14546–00	13 – 26
6CB–14564–00	13 – 9
63P–14567–00	13 – 36
6CE–14711–01	32 – 20
6CB–14750–A0	32 – 9
6CB–14755–00	32 – 11
	40 – 5
6CB–1475A–00	10 – 27
6CB–1475F–00	10 – 28
6CB–1475G–10	10 – 31
6CB–1475H–00	13 – 13
6CB–1475J–00	13 – 14
6CE–14872–00	18 – 25
	18 – 28
6CB–14984–00	1 – 12
	13 – 31
6CB–14985–00	13 – 25

PART NO.	REF. NO.
6CE–14987–00	38 – 3
6EK–14989–00	10 – 30
6CE–15100–10	3 – 2
6AW–15142–00	5 – 38
6CB–15142–00	6 – 8
6CB–15187–00	3 – 5
6CB–15311–01	33 – 1
6BB–15316–00	32 – 29
6CB–15319–00	3 – 43
6CB–15362–00	33 – 18
6G8–15363–00	3 – 41
6CB–15373–01	9 – 8
6CB–15377–00	33 – 19
6CE–15411–00–9S	3 – 14
6CE–15421–10–9S	3 – 15
6CB–15451–01	3 – 17
	39 – 7
6CB–15481–00	3 – 6
6CB–15512–00	8 – 29
6CB–15544–00	6 – 4
6CB–2134V–00	5 – 40
69J–2134X–00	9 – 16
6E5–21744–00	10 – 24
6GR–23113–00	30 – 84
6CB–2416A–00	10 – 5
69J–24170–00	9 – 14
69J–2419A–01	9 – 15
6CB–24217–00	13 – 7
60E–24300–01	14 – 9
6CB–24313–10	15 – 18
6CB–24314–11	15 – 2
6CB–24315–00	25 – 13
6CB–24317–00	14 – 6
6CB–24323–00	14 – 7
6CB–24324–00	14 – 5
6E5–24351–51	15 – 3
6AW–24360–01	16 – 1
6G8–24376–00	10 – 29
6CE–24376–01	18 – 27
6CE–24377–00	18 – 17
6AW–24377–01	15 – 4
688–24378–00	7 – 2
	10 – 21
	10 – 36
	18 – 30
6CE–24378–00	7 – 13
6E5–24378–00	14 – 8
68V–24379–10	13 – 11

PART NO.	REF. NO.
6CB–24410–01	13 – 27
6CB–24452–10	13 – 18
4SV–24453–00	13 – 38
6CB–24460–00	13 – 4
6CB–24461–00	14 – 1
6P3–24469–00	15 – 10
6CB–24482–00	13 – 20
6CB–24491–00	13 – 30
6CB–24492–00	13 – 28
6CB–24501–01	1 – 9
	13 – 3
6P3–24519–00	15 – 9
6P3–24560–22	15 – 7
6P3–24562–21	15 – 8
6P3–24563–01	1 – 14
	15 – 12
6P3–24564–00	1 – 13
	15 – 11
6CB–24566–00	15 – 13
6CB–24592–00	13 – 29
6CB–24596–01	15 – 20
69J–28100–02	15 – 22
67F–2812A–00	20 – 31
6CB–41132–01	32 – 13
6CB–41134–00	32 – 14
	40 – 6
6CB–41135–00	32 – 17
	40 – 8
6CE–41136–00	32 – 19
	40 – 9
6CE–41137–01	32 – 1
6CB–41138–00	32 – 16
	40 – 7
6CB–42134–00	2 – 13
6AW–42169–00	25 – 15
6CE–42195–10	27 – 8
6BG–42384–00	25 – 2
6DA–42384–00	24 – 23
6CE–42510–00–8D	29 – 5
6CE–42610–02	2 – 1
6CB–42615–01	24 – 5
6BG–42617–00	21 – 9
6CB–42617–00	21 – 10
6CE–4261A–00	2 – 2
6CB–42628–00	2 – 16
6CB–42629–00	21 – 11
6CE–42635–00	2 – 3
6CB–42643–00	25 – 29

PART NO.	REF. NO.
6CB–42644–00	25 – 30
6CB–42647–A0	2 – 6
6CB–42662–00	5 – 44
6AW–42663–00	2 – 12
6CE–42675–02	2 – 19
6CE–42676–02	2 – 20
6CE–42677–01	2 – 21
6CE–42678–02	2 – 18
6CE–42681–03	2 – 22
6CE–42682–03	2 – 23
6AW–42697–10	2 – 17
6CB–42710–00–8D	24 – 1
6CB–42716–00	24 – 6
69J–42717–00	25 – 11
6DA–42717–00	24 – 22
69J–42723–01	21 – 26
6E5–42724–00	32 – 8
6CE–42725–02	24 – 2
6H4–42726–00	25 – 4
6H1–42726–21	25 – 1
61A–42727–00	25 – 5
64G–42727–00	25 – 6
6CE–42733–00	25 – 7
6CE–42734–00	25 – 8
6CE–42741–01–8D	26 – 1
6CB–42743–00	24 – 26
6CB–42744–00	25 – 35
6H4–42748–00	24 – 24
68F–42753–00	24 – 32
6CB–42756–00	24 – 30
69M–42758–01	18 – 5
	20 – 10
6CB–42761–00	24 – 3
6CB–42766–00	24 – 28
6CB–42769–01	32 – 12
6CE–42771–01–8D	26 – 2
6CE–42774–A0	26 – 15
6AW–42785–00	25 – 17
6CE–42786–01	25 – 9
6CE–42787–01	25 – 10
6EE–42794–40	24 – 34
6EE–42794–50	24 – 35
6CB–42815–02–8D	24 – 7
6CB–42816–02–8D	24 – 8
6CB–42817–02–8D	24 – 9
6CB–42818–00	24 – 13
6CB–42819–00	24 – 14
69J–43111–11–8D	28 – 1

PART NO.	REF. NO.
69J–43112–02–8D	28 – 12
6E5–43126–10	28 – 39
6R3–43131–30	28 – 18
61A–43132–00	28 – 10
61A–43133–00	28 – 13
66T–43144–00	24 – 17
6G5–43144–00	28 – 29
6G5–43148–00	28 – 34
61A–43181–01	28 – 31
6G5–43185–02	28 – 32
61A–43311–22–8D	28 – 26
6AW–43376–00	29 – 3
69J–43800–11–8D	30 – 1
69J–43801–01	30 – 4
6GR–43804–00	31 – 3
6GR–43805–00	31 – 2
6GR–4380F–00	31 – 6
6CE–4380P–00	30 – 12
6CE–43810–01	30 – 3
61A–43811–00	30 – 9
63P–43812–20	30 – 76
61A–43813–02	30 – 18
6H1–43814–11	30 – 17
69J–43816–00	30 – 62
69J–43817–00	30 – 67
61A–43818–00	30 – 25
69J–4381C–00	30 – 30
	30 – 35
69J–4381J–00	30 – 63
69J–43820–01	30 – 78
61A–43821–02	30 – 77
69J–43828–00	30 – 70
6H1–43829–00	30 – 73
69J–4382E–00	30 – 11
69J–43830–01	30 – 33
69J–43831–00	30 – 65
69J–43833–02	30 – 21
69J–43835–10	30 – 19
6CE–43840–01	30 – 2
6CJ–43841–00	30 – 42
6CJ–43843–00	30 – 53
6H1–43844–10	30 – 55
63P–43844–20	30 – 50
69J–43845–00	30 – 28
69A–4384F–00	30 – 39
69J–4384G–00	30 – 58
6H1–4384G–11	30 – 54
69J–4384H–00	30 – 10

PART NO.	REF. NO.
61A–4384H–10	30 – 81
6CJ–4384M–00	30 – 38
69J–43851–00	30 – 49
69J–43853–00	30 – 45
69J–43854–00	30 – 57
69J–43855–00	30 – 52
6H1–43856–10	30 – 56
61A–43861–00	30 – 14
	30 – 16
	30 – 74
63P–43861–20	30 – 6
6D8–43863–00	30 – 27
	30 – 75
61A–43864–00	30 – 80
6GR–43864–00	31 – 12
60V–4386A–00	30 – 44
6GR–4386K–00	31 – 7
61A–43871–00	30 – 15
69J–43871–00	30 – 61
6H1–43872–00	30 – 7
61A–43874–00	30 – 79
6H1–43875–00	30 – 29
61A–43875–10	30 – 82
61A–43876–01	30 – 26
67C–43879–10	31 – 9
69J–43880–11	31 – 1
69J–43881–11	31 – 10
6GR–43882–01	31 – 11
6H1–43883–00	30 – 43
69J–43888–00	30 – 71
69J–4388E–01	30 – 23
69J–4388F–00	30 – 68
69J–4388H–00	30 – 66
69J–4388J–00	30 – 20
6GR–43892–00	31 – 4
6CJ–43893–00	30 – 46
69J–43894–00	30 – 41
69J–43899–01	30 – 31
61A–4389H–01	30 – 8
69J–4389J–00	30 – 32
	30 – 36
6CE–44117–10	27 – 14
6CE–44118–A0	27 – 18
6CE–44120–21	27 – 20
6CE–44121–10	27 – 16
6CE–44122–20	27 – 9
6CE–44142–20	27 – 7
6CF–44150–00	34 – 12

PART NO.	REF. NO.
6CF–44150–10	34 – 12
6CE–44194–00	29 – 30
6CE–44311–01	34 – 14
6AW–44312–00	34 – 20
	35 – 6
6CB–44312–00	34 – 27
6CE–44315–00	34 – 24
	40 – 22
	40 – 36
6AW–44322–00	34 – 16
	40 – 30
6CE–44323–01	34 – 23
	40 – 35
6CE–44352–00	34 – 21
	40 – 33
6CE–44361–00	35 – 3
6CE–44362–00	35 – 4
6D0–44362–01	35 – 27
6AW–44363–00	35 – 7
6AW–44365–00	34 – 19
	35 – 1
	35 – 5
	40 – 21
6AW–44366–00	32 – 45
	35 – 2
	40 – 13
6D0–44366–00	35 – 28
6D0–44367–00	35 – 26
6P2–44391–00	24 – 25
6CE–44511–00	29 – 32
6CE–44514–00	29 – 22
6CE–44526–00	29 – 23
6G5–44526–00	28 – 4
6CE–44532–00	29 – 25
6CE–44533–00	29 – 31
6CE–44536–00	29 – 24
6CE–44551–00–CA	29 – 10
6CE–44552–00–CA	29 – 20
6CE–44555–00	29 – 14
6CE–44574–00	29 – 12
6CE–44575–00	29 – 13
6CE–45111–01–8D	32 – 25
6CB–45113–01	32 – 26
	40 – 12
6CE–45123–00	32 – 24
	40 – 11
6CE–45127–00	32 – 23
	40 – 10

PART NO.	REF. NO.
6BB–45152–01	32 – 30
61A–45155–00	32 – 34
6CE–45181–01	32 – 18
6CE–45211–10–8D	32 – 44
6P2–45214–00	35 – 14
6P2–45215–00	35 – 15
6CE–45224–00	35 – 18
6CE–45225–00	35 – 19
6CE–45244–00	34 – 39
6G5–45251–02	1 – 15
	28 – 3
6CF–45300–04–8D	34 – 1
6CF–45300–14–8D	34 – 1
6CE–45301–00–8D	34 – 2
69J–45318–01	32 – 32
6CE–45321–10	34 – 9
6CE–45321–20	34 – 9
6CF–45332–01–CA	34 – 62
6CE–45335–00–9S	34 – 29
688–45341–10	34 – 5
6AW–45344–00	34 – 35
6CE–45361–10	34 – 75
6CE–45373–00	1 – 19
	35 – 22
6CE–45375–00	34 – 8
663–45376–00	34 – 7
63P–45378–00	32 – 47
	35 – 24
63P–45379–00	32 – 42
6CB–45383–00	34 – 73
6CB–45384–00	34 – 74
6CE–45501–00	34 – 41
6CE–45501–10	34 – 41
6CE–45539–00	34 – 40
6CF–45550–00	34 – 42
6CF–45560–01	34 – 45
6CB–45567–00	34 – 50
6CB–45567–10	34 – 50
6CB–45567–20	34 – 50
6CB–45567–30	34 – 50
6CB–45567–40	34 – 50
6CB–45567–50	34 – 50
6CF–45576–00	34 – 64
6CB–45577–00	34 – 69
6CB–45577–10	34 – 69
6CB–45577–20	34 – 69
6CB–45577–30	34 – 69
6CB–45577–40	34 – 69

PART NO.	REF. NO.
6CB–45577–50	34 – 69
6CB–45577–60	34 – 69
6K1–45578–01	34 – 71
6K1–45578–10	34 – 71
6K1–45578–20	34 – 71
6K1–45578–30	34 – 71
6K1–45578–40	34 – 71
6K1–45578–50	34 – 71
6K1–45578–60	34 – 71
6CE–45587–00	34 – 33
6CE–45587–10	34 – 33
6CE–45587–20	34 – 33
6CE–45587–30	34 – 33
6CE–45587–40	34 – 33
6CE–45587–50	34 – 33
6CE–45587–60	34 – 33
6CF–45611–01	34 – 51
6CE–45631–00	34 – 60
6E5–45633–01	34 – 61
6CB–45634–00	34 – 52
61A–45635–00	34 – 56
6H1–45668–00	34 – 55
6CB–45824–00	34 – 47
6CF–45930–20	35 – 34
6D1–45970–10	35 – 38
6CF–45970–20	35 – 34
6CF–45972–20	35 – 34
6CF–45974–20	35 – 34
6CF–45976–20	35 – 34
6CF–45978–20	35 – 34
69J–45987–00	35 – 29
688–45997–01	35 – 30
6CF–45B70–20	35 – 36
6CF–45B72–20	35 – 36
6CF–45B74–20	35 – 36
6CE–45C81–10	35 – 35
	35 – 37
6ML–4820A–00	27 – 1
6CE–68303–00	27 – 27
6Y8–81315–02	36 – 1
6P2–81336–00	20 – 33
6CE–81337–01	17 – 12
6CE–81410–00	17 – 3
6CB–81443–00	22 – 6
6CB–81639–10	20 – 27
6CE–81800–01	23 – 1
6CE–81801–01	23 – 5
6CE–81807–00	23 – 8

PART NO.	REF. NO.
6CB–81809–00	23 – 14
6CE–81810–00	23 – 3
67F–81813–00	23 – 6
6CE–81820–00	23 – 7
6CE–81821–00	23 – 11
6CB–81822–02	22 – 4
6CB–81823–A0	22 – 8
6CB–81826–00	23 – 22
69J–81828–00	23 – 23
6CE–81830–00	23 – 16
6CB–81832–00	23 – 9
6CB–81836–00	23 – 10
6CE–81839–00	23 – 19
67F–8183R–00	23 – 13
60V–8183T–00	23 – 17
6P2–8183X–00	20 – 18
6CE–81840–01	23 – 4
67F–81841–00	23 – 12
6CE–81842–00	23 – 18
6BR–81845–00	18 – 7
67F–81846–00	23 – 24
6CE–81850–00	23 – 2
6CE–81869–00	23 – 21
67F–81891–00	23 – 15
6CE–81919–20	20 – 35
6CB–81923–00	20 – 36
6P2–81925–01	20 – 1
6CB–81929–00	20 – 4
6C5–81941–00	23 – 20
6CB–81948–02	20 – 8
6CE–81949–01	22 – 13
6AW–81950–00	20 – 15
6CB–81952–00	21 – 34
6AW–8195A–00	20 – 22
6CE–81960–10	18 – 11
6CE–81972–00–9S	18 – 12
6CE–81975–00	18 – 13
6CE–81980–00	21 – 2
6EE–81994–40	17 – 19
6EE–81994–50	17 – 20
6AH–81996–00	24 – 36
6CB–82105–01	20 – 39
6P2–82113–00	20 – 30
69J–82147–00	28 – 28
6E5–82148–00	28 – 8
6H1–82148–00	28 – 6
6AW–82149–00	29 – 16
67F–82151–00	20 – 25

PART NO.	REF. NO.
6CE–82151–00	20 – 21
6TA–82151–01	36 – 2
67F–82151–10	20 – 26
67F–82151–40	20 – 23
67F–82151–50	20 – 24
6CE–82170–11	20 – 20
6GR–82181–00	31 – 5
6CB–82310–00	19 – 1
6CB–82314–00	19 – 3
6CB–82316–01	18 – 3
6P2–82380–00	11 – 5
6CB–82388–00	21 – 17
6P2–82560–01	21 – 20
6BR–82563–01	21 – 25
69J–82587–00	21 – 27
6CE–82588–00	20 – 6
6E9–82588–00	21 – 21
6CB–82589–01	21 – 8
6CE–82590–15	21 – 1
6CB–82594–00	21 – 4
6CE–8259M–00	22 – 12
6CE–825E0–01	37 – 1
68F–82846–00	20 – 29
6E5–83558–00	32 – 36
6DA–83614–00	21 – 29
63P–83614–01	21 – 28
6AW–83651–00	21 – 23
69J–83672–11	29 – 1
6P2–85075–00	19 – 6
64J–85516–00	18 – 4
	20 – 9
6CB–85516–00	17 – 17
6CB–85544–00	20 – 28
689–85547–00	15 – 1
6CB–85547–00	9 – 10
6CB–85561–00	17 – 5
6CE–85564–00	27 – 6
6CB–85580–00	17 – 4
6CE–85592–00	17 – 8
6P2–85780–00	6 – 11
6CB–85790–00	21 – 19
63P–85886–00	21 – 31
6P2–85896–00	19 – 5
6CE–8591A–13	18 – 1
6C5–86120–00	10 – 3
6CB–86120–00	6 – 1
K0F–A3233–00	4 – 15
K0F–A3741–00	8 – 5

PART NO.	REF. NO.
K0F–A3742–00	8 – 6
K0F–A3743–00	8 – 3
K0F–A3751–00	8 – 8
K0F–A3751–10	8 – 8
K0F–A3751–20	8 – 8
K0F–A3751–30	8 – 8
K0F–A3751–40	8 – 8
K0F–A3751–50	8 – 8
K0F–A3751–60	8 – 8
K0F–A3751–70	8 – 8
K0F–A3751–80	8 – 8
K0F–A3751–90	8 – 8
K0F–A3751–A0	8 – 8
K0F–A3751–B0	8 – 8
K0F–A3751–C0	8 – 8
K0F–A3751–D0	8 – 8
K0F–A3751–E0	8 – 8
K0F–A3751–F0	8 – 8
K0F–A3751–G0	8 – 8
K0F–A3751–H0	8 – 8
K0F–A3751–J0	8 – 8
K0F–A3751–K0	8 – 8
K0F–A3751–L0	8 – 8
K0F–A3751–M0	8 – 8
K0F–A3751–N0	8 – 8
K0F–A3751–P0	8 – 8
K0F–A3751–R0	8 – 8
K0F–A3751–S0	8 – 8
K0F–A3751–T0	8 – 8
K0F–A3753–00	8 – 8
K0F–A3753–10	8 – 8
K0F–A3753–20	8 – 8
K0F–A3753–30	8 – 8
K0F–A3753–40	8 – 8
K0F–A3753–50	8 – 8
K0F–A3753–60	8 – 8
K0F–A3753–70	8 – 8
6CB–W0001–03	39 – 1
6CE–W0001–23	40 – 1
6CE–W0078–01	1 – 20
	40 – 28
6CE–W009A–03–9S	5 – 1
6CE–W009C–03–9S	5 – 11
6CB–W1165–10	4 – 9
6CE–W4267–00	2 – 24
6CB–W4624–00	8 – 27
6CE–W8145–01	17 – 1
6EK–W9010–00	17 – 2

PART NO.	REF. NO.
90101–12065	28 – 43
90101–12066	28 – 43
90101–14004	29 – 17
90105–06035	6 – 3
	9 – 4
90105–06037	3 – 28
	3 – 45
	6 – 7
90105–06039	25 – 34
90105–06151	3 – 18
	3 – 40
	22 – 9
90105–06M07	3 – 13
	5 – 22
90105–06M08	12 – 9
90105–08175	3 – 7
	5 – 28
90105–08178	6 – 5
90105–08220	5 – 29
90105–08M61	34 – 76
90105–08M87	22 – 5
90105–10M00	35 – 23
90105–14005	29 – 27
90109–06277	5 – 33
	5 – 37
90109–06M80	26 – 14
90110–05039	35 – 21
90110–08M05	30 – 83
90111–06142	26 – 4
	26 – 7
90111–06144	26 – 3
	26 – 8
90111–08078	2 – 7
90116–10041	35 – 9
90119–06269	9 – 2
90119–06287	32 – 43
90119–06291	25 – 33
90119–06293	18 – 6
	20 – 11
90119–06M17	9 – 20
	15 – 14
90119–06MA3	18 – 14
90119–07001	5 – 5
	5 – 15
90119–07234	5 – 6
	5 – 16
90119–08020	9 – 3
90119–08168	27 – 3

PART NO.	REF. NO.
90119–08182	32 – 4
90119–08187	24 – 21
90119–08M14	34 – 26
	40 – 38
90119–08M32	34 – 28
90119–10007	32 – 27
90119–10008	35 – 13
90119–10009	35 – 12
90119–10024	28 – 25
	29 – 21
	29 – 33
90119–10038	35 – 9
90119–10050	8 – 18
90119–10M07	8 – 31
90149–11001	5 – 27
90151–05M05	3 – 33
90151–06M02	3 – 11
	3 – 20
	32 – 3
90152–05M08	35 – 16
90159–05059	37 – 3
90159–06053	26 – 11
90170–10009	35 – 11
90170–16M19	34 – 43
90170–30M18	34 – 38
90171–18M04	35 – 32
90173–06001	26 – 9
90179–06M28	5 – 41
90179–08003	22 – 2
90183–02M03	34 – 58
90183–061A6	26 – 10
90185–05002	35 – 17
	35 – 20
90185–06M07	5 – 45
	27 – 12
90185–14M00	29 – 18
	29 – 28
90185–22M11	28 – 21
90201–02M00	34 – 57
90201–06068	27 – 11
90201–06M02	32 – 40
90201–10048	35 – 10
90201–10M01	8 – 32
90201–11008	27 – 24
90201–12064	27 – 4
90201–12426	28 – 45
90201–13M01	28 – 44
90201–156J2	24 – 11

PART NO.	REF. NO.
90201–16032	29 – 15
90201–16M00	34 – 44
90201–186F1	5 – 8
	5 – 18
90201–26M59	28 – 20
90201–40M00	29 – 6
90201–62008	34 – 32
90202–08M41	27 – 10
90202–40M47	29 – 9
90206–15M18	24 – 12
90214–30003	34 – 37
90249–06M19	28 – 35
90250–08M07	34 – 59
90280–04002	34 – 22
	40 – 34
90282–05008	34 – 72
90340–08002	34 – 4
90340–14M06	5 – 9
	33 – 4
90340–18M09	5 – 7
	5 – 17
90386–08008	27 – 2
90386–10001	27 – 25
90386–10M16	28 – 33
90386–11001	27 – 22
90386–15M73	24 – 10
90386–18M14	28 – 41
	30 – 24
90386–18M63	28 – 40
90386–25M31	28 – 19
90386–39M89	29 – 7
90387–05004	37 – 4
90387–06285	17 – 14
90387–06289	9 – 19
	15 – 16
90387–06M03	25 – 32
90387–06M43	26 – 13
90387–07028	26 – 6
90387–08104	27 – 5
90387–08M37	24 – 20
90387–08M45	2 – 10
90387–10094	2 – 8
90387–10M05	28 – 36
90387–11005	5 – 26
90387–28013	29 – 26
90401–19001	3 – 37
90430–06M03	5 – 23
90430–08003	1 – 18

PART NO.	REF. NO.
90430–08003	34 – 6
	40 – 14
90430–14115	5 – 10
90430–14M09	1 – 17
	33 – 5
	40 – 2
90445–07032	32 – 38
90445–09068	18 – 29
90445–09220	7 – 1
90445–096H2	7 – 10
90445–097F7	10 – 9
90445–107A5	18 – 19
90445–14019	25 – 23
90445–14021	25 – 14
90445–16015	25 – 16
90446–15003	20 – 19
	29 – 34
90462–06013	18 – 21
90462–10061	32 – 41
90464–06001	21 – 6
90464–07209	10 – 20
90464–07M20	10 – 35
90464–08004	11 – 9
90464–09013	7 – 5
	10 – 15
90464–09129	21 – 33
90464–10011	10 – 34
90464–10M59	7 – 4
90464–11012	10 – 32
90464–11121	21 – 13
90464–12009	14 – 14
90464–12010	7 – 6
	10 – 13
	10 – 33
90464–12012	14 – 15
	14 – 16
	15 – 5
90464–12183	20 – 13
	21 – 15
90464–13227	22 – 10
90464–13249	9 – 21
	18 – 9
	20 – 12
90464–16001	21 – 24
	25 – 28
90464–18004	22 – 11
90464–18246	21 – 14
90464–20181	9 – 22

PART NO.	REF. NO.
90464–20181	10 – 19
	18 – 10
	20 – 14
	21 – 3
	21 – 16
90464–20258	24 – 33
90464–23001	10 – 6
90464–26002	7 – 9
	10 – 14
	18 – 23
90464–99004	9 – 12
90465–08M83	28 – 16
	28 – 23
90465–11M10	7 – 7
	7 – 11
	10 – 7
	10 – 12
	15 – 6
	15 – 19
	17 – 9
	18 – 31
	18 – 32
	18 – 33
	25 – 3
	25 – 24
	28 – 22
	29 – 35
	32 – 37
	37 – 5
90465–11M59	7 – 16
90465–13M18	37 – 6
90465–13M24	21 – 7
90465–14M66	7 – 17
	14 – 13
90467–08004	18 – 34
90467–08M18	18 – 20
90467–090A0	10 – 11
90467–130A5	25 – 25
90467–140A8	25 – 26
	38 – 4
90467–140A9	25 – 27
	38 – 5
90468–18008	27 – 13
	27 – 17
90480–10M23	9 – 18
	15 – 15
90480–12314	17 – 16
	19 – 4

PART NO.	REF. NO.
90480–13M24	26 – 12
90480–14029	25 – 31
90480–15M31	17 – 15
90480–16009	26 – 5
90480–22M81	24 – 19
90501–10M77	34 – 53
90506–16003	28 – 38
90506–22001	24 – 16
91318–05025	30 – 59
91318–05040	30 – 64
91490–40030	35 – 33
91690–30020	28 – 37
91690–40010	3 – 16
91809–08006	5 – 4
	5 – 14
92990–06100	2 – 14
92990–06200	2 – 5
92990–08600	2 – 9
92990–18200	35 – 31
92995–14600	29 – 19
	29 – 29
93101–28019	34 – 30
	40 – 23
93101–30019	34 – 67
	40 – 26
93101–30030	34 – 66
	40 – 25
93102–38008	8 – 26
	39 – 11
93102–85008	4 – 4
	39 – 10
93104–22M07	34 – 15
	40 – 18
	40 – 29
93106–09014	34 – 11
	40 – 17
93106–10001	34 – 11
	40 – 17
93106–19001	30 – 5
93210–064A5	30 – 51
93210–07003	32 – 48
	35 – 25
	40 – 15
93210–08391	30 – 48
93210–09165	27 – 21
	30 – 72
93210–17239	30 – 22
93210–19MJ3	33 – 20

PART NO.	REF. NO.
93210–19MJ3	40 – 4
93210–24M79	3 – 42
	39 – 17
93210–26658	3 – 8
	33 – 15
	39 – 6
	39 – 14
93210–27370	3 – 44
	39 – 18
93210–33M49	34 – 10
	40 – 16
93210–35321	29 – 8
93210–37160	34 – 18
	40 – 20
	40 – 32
93210–64488	34 – 34
	40 – 24
93210–66001	30 – 69
93210–94003	34 – 17
	40 – 19
	40 – 31
93211–02001	34 – 68
	40 – 27
93311–83280	34 – 3
93311–85894	34 – 46
93315–43061	34 – 65
93332–00048	34 – 63
93340–67011	34 – 49
93341–440U5	34 – 70
93399–99966	34 – 31
93410–10082	27 – 26
93410–18M05	28 – 42
93410–37M04	29 – 11
93420–36M01	32 – 33
93501–04011	34 – 54
93501–08001	30 – 47
93503–16003	30 – 37
93505–32038	30 – 13
	30 – 34
93604–07M13	27 – 19
93604–35236	30 – 60
93605–10108	8 – 10
	8 – 12
	8 – 14
	8 – 16
93606–12019	3 – 3
	3 – 4
	4 – 3

PART NO.	REF. NO.
93606–12019	34 – 25
	40 – 37
93606–19002	28 – 2
93606–19M23	32 – 22
93608–16M16	32 – 7
	32 – 28
	32 – 46
	33 – 3
	34 – 48
	35 – 8
93700–06002	28 – 15
	28 – 27
94702–00400	1 – 8
	5 – 46
95022–06035	17 – 10
95023–06012	18 – 22
95027–06025	3 – 27
95380–06600	2 – 15
	10 – 4
95380–12600	28 – 46
95780–08300	2 – 11
95780–10300	29 – 4
95812–06025	33 – 8
95814–08020	20 – 3
95D75–06025	27 – 23
	27 – 28
95D75–06040	33 – 14
95D75–08030	9 – 1
95D75–08060	11 – 4
95D95–06010	32 – 35
95D95–06012	18 – 8
	21 – 5
	21 – 22
	21 – 30
	24 – 18
	24 – 27
	24 – 29
	24 – 31
95D95–06014	5 – 39
	15 – 21
	24 – 4
95D95–06016	6 – 9
	10 – 17
	15 – 17
	20 – 7
	21 – 18
	21 – 35
	22 – 7

PART NO.	REF. NO.
95D95–06016	25 – 12
	33 – 21
95D95–06020	9 – 13
	17 – 13
	18 – 2
	20 – 5
	21 – 12
	32 – 10
95D95–06025	18 – 15
	19 – 2
95D95–06030	5 – 32
	5 – 36
	17 – 11
95D95–08012	24 – 15
95D95–08016	20 – 2
	20 – 37
	20 – 38
95D95–08025	5 – 24
97513–06520	20 – 17
97513–08545	22 – 1
97595–05520	17 – 7
97602–04310	31 – 8
97780–50620	20 – 32
97780–60516	2 – 4
97780–60520	25 – 22
97885–06010	28 – 11
	28 – 14
97985–04308	22 – 3
97985–06212	28 – 9
	28 – 17
97985–06216	29 – 2
97D95–06010	28 – 30
	32 – 39
97D95–06012	32 – 31
97E75–06525	27 – 15
97E75–06620	11 – 6
97E75–08535	32 – 21
	33 – 2
97E75–08560	32 – 15
97E75–10535	32 – 6
97E75–10545	32 – 5
97E75–10570	35 – 13
97E95–06510	28 – 7
97E95–06514	28 – 24
97E95–06516	9 – 17
	20 – 34
	37 – 2
97E95–06520	19 – 7

PART NO.	REF. NO.	PART NO.	REF. NO.	PART NO.	REF. NO.	PART NO.	REF. NO.	PART NO.	REF. NO.	PART NO.	REF. NO.
97E95–06525	28 – 5										
97E95–06610	20 – 16										
97E95–08520	34 – 36										
98507–04008	13 – 39										
98780–06530	3 – 31										
98780–06550	3 – 35										
99001–08600	34 – 13										
99001–09600	34 – 13										
99002–03600	30 – 40										
99530–08012	17 – 6										
99530–14016	8 – 30										