YAMAHA

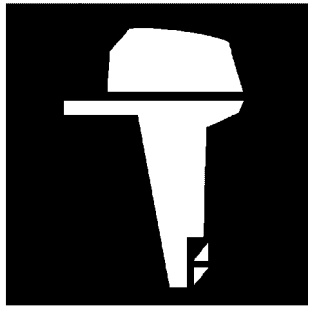

PARTS CATALOGUE

F150CA-2021 (6HP5)

1V6HP-100EA

( )

YAMAHA GENUINE Parts & Accessories

2022/2/21

NEWS NO.	DATE	COMMENT
PE0-OM-220003	Jan.,28,2022	MOD:BOTTOM COWLING 2 LIST REVISION

F150CA
PARTS CATALOGUE
©2021 by Yamaha Motor Co., Ltd.
1st edition, February 2021
All rights reserved.
Any reprinting or unauthorized use
without the written permission of
Yamaha Motor Co., Ltd.
is expressly prohibited.
Printed in Japan.

FOREWORD

This Parts Catalogue is related to the parts for the model(s) on the cover page. When you are ordering replacement parts, please refer to this Parts Catalogue and quote both part numbers and part names correctly.

1. Modifications or additions which have been made after the issue of the Parts Catalogue will be announced in the Parts News.
   It is advisable that you make the necessary corrections to the Parts Catalogue according to the Parts News.

2. Abbreviations
   The following abbreviations are used in this Parts Catalogue.
   "UR" Use specified parts number.
   "UN" Use as many as needed.
   "AP" Alternate Parts
   "LM" Locally Made (Parts need to be ordered locally)
   "F#" Frame No. (Applicable machine No.)
   "O/S" Over Size

3. The number of components for assembly
   - Parts, which are to be supplied in an assembly, are listed with a dot (.) in front of the part name as shown below.
   - The numeral appearing to the right of each component part indicates the quantity of parts for each assembly unit.

PART NO.	DESCRIPTION	Q'TY	REMARKS
2F5–83310–60	FRONT FLASHER LIGHT ASSY	2	
115–83311–60	.BULB (6V–18W)	1	

4. Applicable colours of graphics are represented in the "REMARKS" as shown below.

PART NO.	DESCRIPTION	Q'TY	REMARKS
2N4–24110–00–X5	FUEL TANK COMP.	2	MXR
3J1–24240–10	.GRAPHIC, FUEL TANK	1	FOR MXR

5. Note that the illustrations for reference in finding parts numbers are not to be used for assembling. When assembling, please use the applicable service manual.

6. The asterisk (*) before a reference number indicates modified items after the first edition.

7. Applicable Serial No.
   Engine Serial No.

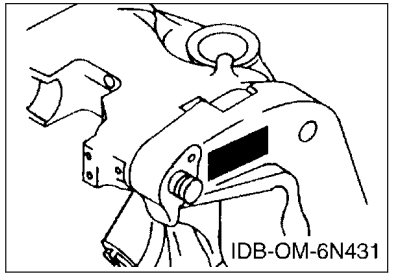

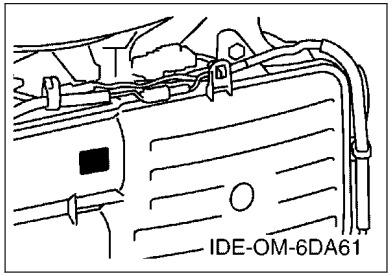

8. Applicable Engine Starting Serial No.

Model	Serial No.	Model	Serial No.
F150CA	6HP-1005369		

9. Applicable Colour Code

Abbreviation	Colour Name	Colour Code
DBN1	DARK BLUISH GRAY 1	008D

10. Quantity Column Information

Column No.	Name Of Q'ty Column	Applicable Model
1	XCA	F150XCA
2	XCA2	F150XCA2
3	LCA	F150LCA
4	LCA2	F150LCA2

CONTENTS

SCHEDULED SERVICE PARTS....1
TOP COWLING....2
CYLINDER & CRANKCASE 1....3
CRANKSHAFT & PISTON....5
CYLINDER & CRANKCASE 2....6
CYLINDER & CRANKCASE 3....7
CYLINDER & CRANKCASE 4....9
VALVE....10
INTAKE 1....13
INTAKE 2....14
INTAKE 3....16
FUEL INJECTION PUMP 1....17
FUEL INJECTION PUMP 2....19
FUEL 1....20
FUEL 2....21
GENERATOR....22
ELECTRICAL 1....24
ELECTRICAL 2....26
ELECTRICAL 3....27
ELECTRICAL 4....28
ELECTRICAL 5....29
ELECTRICAL 6....30
STARTING MOTOR....31
BOTTOM COWLING 1....32
BOTTOM COWLING 2....34
BOTTOM COWLING 3....35
CONTROL....36
BRACKET 1....38
BRACKET 2....40
POWER TRIM & TILT ASSY 1....42
POWER TRIM & TILT ASSY 2....45
UPPER CASING....46
OIL PAN....48
LOWER CASING & DRIVE 1....49
LOWER CASING & DRIVE 2....53
STEERING GUIDE....54
OPTIONAL PARTS 1....55
OPTIONAL PARTS 2....56
OPTIONAL PARTS 3....57
REPAIR KIT 1....58
REPAIR KIT 2....59

INDEX

NUMERICAL INDEX....61

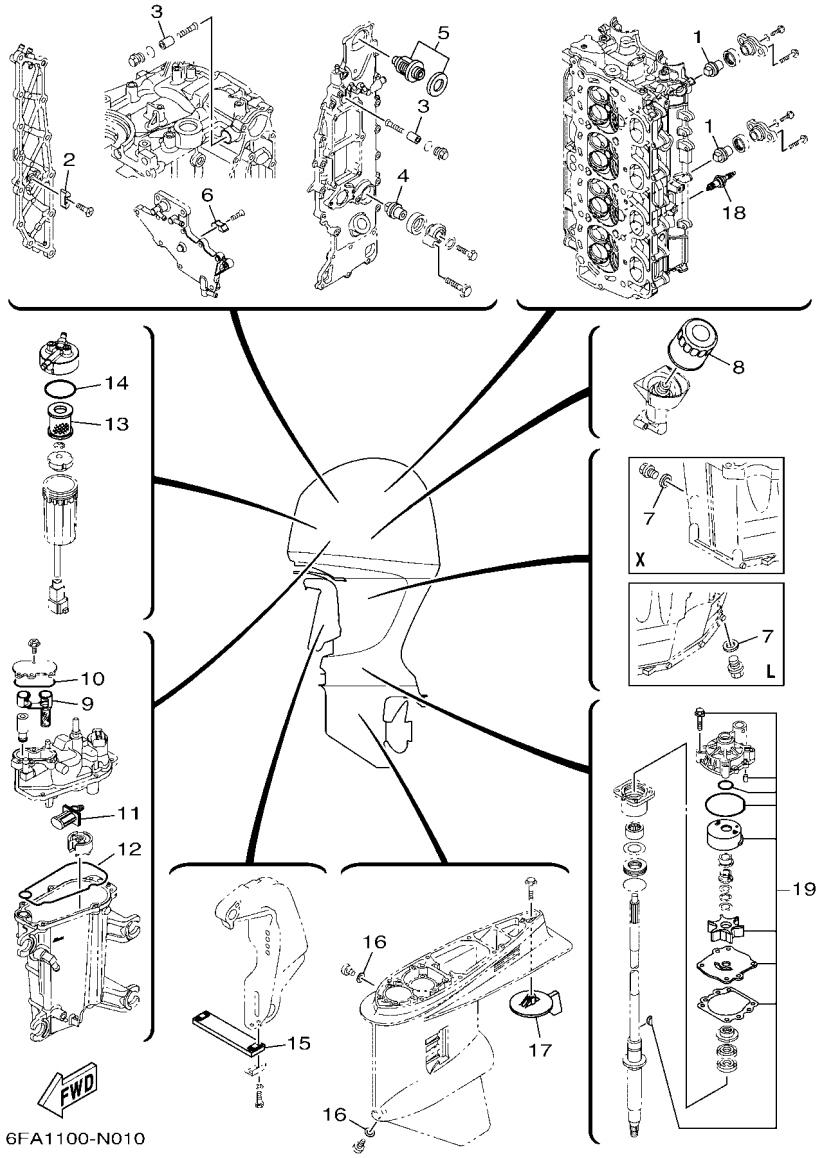

FIG. 1 SCHEDULED SERVICE PARTS

REF. NO.	PART NO.	DESCRIPTION	XCA	XCA2	LCA	LCA2		REMARKS
1	67F–11325–01	ANODE	2	2	2	2		
2	6E5–11325–00	ANODE	1	1	1	1		
3	68T–11325–00	ANODE	2	2	2	2		
4	67F–11325–01	ANODE	1	1	1	1		
5	6DA–12411–01	THERMOSTAT	1	1	1	1		
6	6E5–11325–00	ANODE	1	1	1	1		
7	90430–14M09	GASKET	1	1	1	1		
8	69J–13440–04	ELEMENT ASSY, OIL CLEANER	1	1	1	1		
9	6CB–24501–01	FILTER, FUEL	1	1	1	1		
10	6CB–13016–00	O-RING	1	1	1	1		
11	63P–13915–00	FILTER	1	1	1	1		
12	6CB–14984–00	GASKET, FLOAT CHAMBER	1	1	1	1		
13	6P3–24563–01	ELEMENT, FILTER	1	1	1	1		
14	6P3–24564–00	GASKET	1	1	1	1		
15	6AW–45251–00	ANODE	1	1	1	1		
16	90430–08003	GASKET	2	2	2	2		
17	6J9–45371–01	TAB-TRIM	1	1	1	1		
18	94702–00400	PLUG, SPARK (NGK LFR6A-11)	4	4	4	4		
19	61A–W0078–A4	WATER PUMP REPAIR KIT	1	1	1	1		

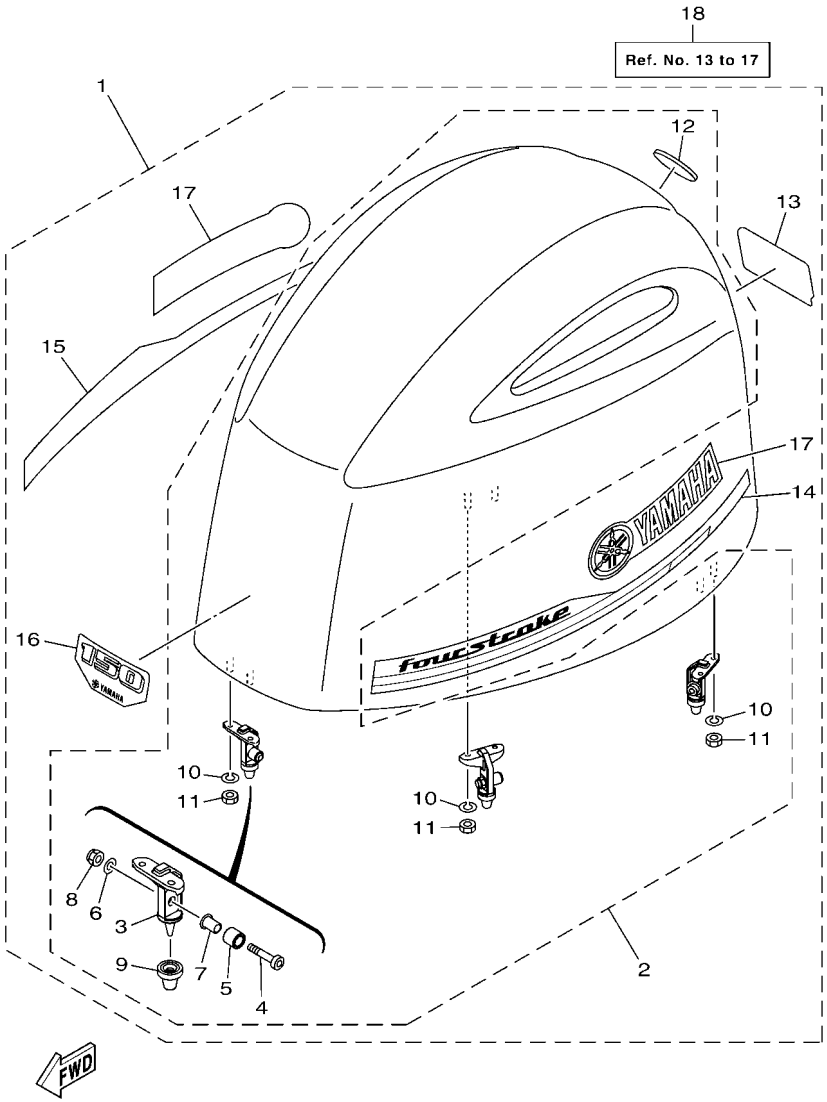

6HP1100-R020

FIG. 2 TOP COWLING

REF. NO.	PART NO.	DESCRIPTION	XCA	XCA2	LCA	LCA2		REMARKS
1	6HP–42610–01	TOP COWLING ASSY	1		1			
	6HP–42610–10–CE	TOP COWLING ASSY		1		1		WHITE
2	6DA–4261A–02	.TOP COWLING W/O GRAPHICS	1		1			
	6DA–4261A–02–CE	.TOP COWLING W/O GRAPHICS		1		1		WHITE
3	6CB–42647–A0	..HOLDER, CLAMP BAND	3	3	3	3		
4	90111–08078	..BOLT,HEX. SOCKET BUTTON	3	3	3	3		
5	90387–10094	..COLLAR	3	3	3	3		
6	92990–08600	..WASHER, PLATE	3	3	3	3		
7	90387–08M45	..COLLAR	3	3	3	3		
8	95780–08300	..NUT, FLANGE	3	3	3	3		
9	6AW–42663–01	..DAMPER 2	3	3	3	3		
10	92990–06100	..WASHER, SPRING	6	6	6	6		
11	95380–06600	..NUT, HEXAGON	6	6	6	6		
12	6DA–42697–00	..TUNING FORK MARK	1	1	1	1		
13	63P–42678–60	.GRAPHIC, REAR	1		1			
	63P–42678–70	.GRAPHIC, REAR		1		1		FOR WHITE COWLING
14	6DA–42675–00	.GRAPHIC, SIDE 1	1		1			
	6DA–42675–10	.GRAPHIC, SIDE 1		1		1		FOR WHITE COWLING
15	6DA–42676–00	.GRAPHIC, SIDE 2	1		1			
	6DA–42676–10	.GRAPHIC, SIDE 2		1		1		FOR WHITE COWLING
16	63P–42677–60	.GRAPHIC, FRONT	1		1			
	63P–42677–70	.GRAPHIC, FRONT		1		1		FOR WHITE COWLING
17	63P–42681–20	.MARK, COWLING	2		2			
	63P–42681–30	.MARK, COWLING		2		2		FOR WHITE COWLING
18	63P–W4267–10	GRAPHIC SET, TOP COWLING	1		1			AP FOR USA
	63P–W4267–20	GRAPHIC SET, TOP COWLING		1		1		AP FOR USA(WHITE)

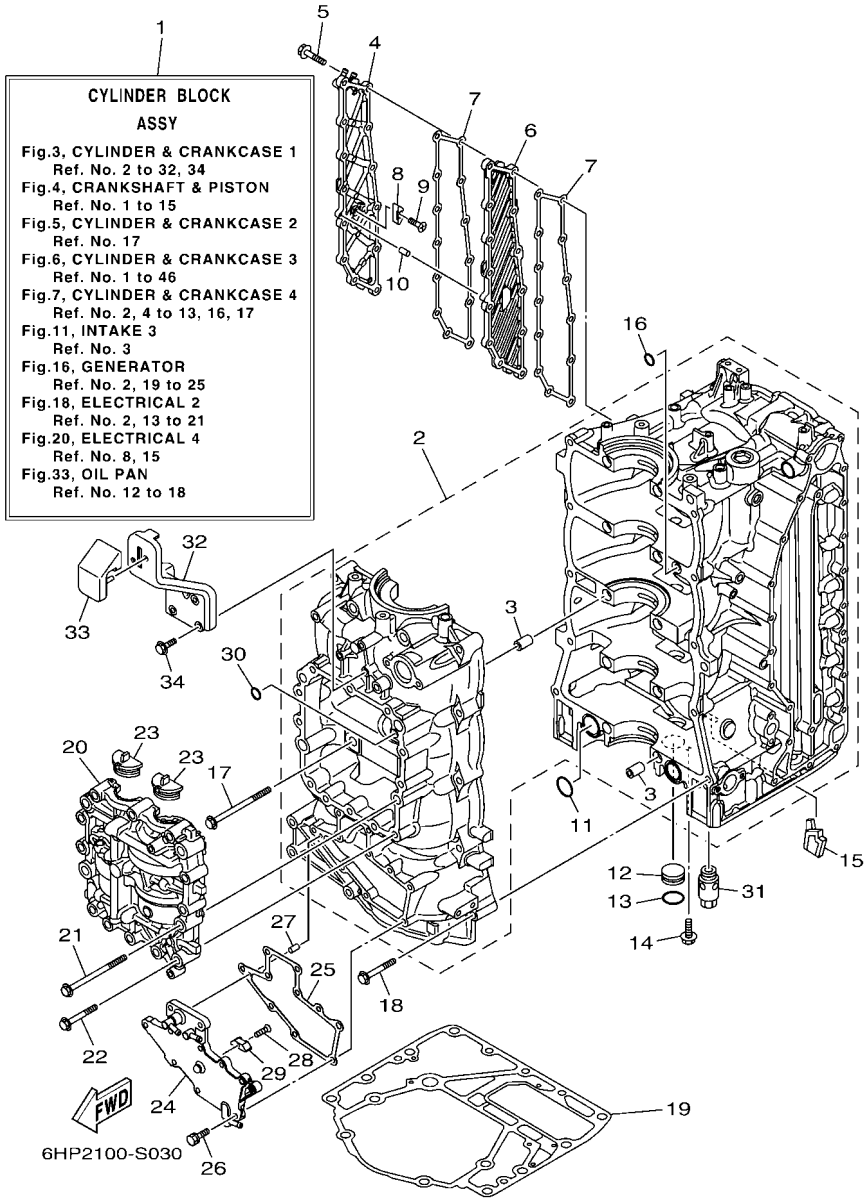

FIG. 3 CYLINDER & CRANKCASE 1

REF. NO.	PART NO.	DESCRIPTION	XCA	XCA2	LCA	LCA2		REMARKS
1	6DA–W009B–13–9S	CYLINDER BLOCK ASSY	1	1	1	1		
2	6DA–15109–01–9S	CRANKCASE ASSY	1	1	1	1		
3	91814–18002	.PIN, DOWEL	10	10	10	10		
4	6DA–15414–00–9S	COVER 1	1	1	1	1		
5	90105–06028	BOLT, FLANGE	13	13	13	13		
6	6DA–15423–00–9S	COVER 2	1	1	1	1		
7	6DA–15353–01	GASKET, DRAIN	2	2	2	2		
8	6E5–11325–00	ANODE	1	1	1	1		
9	98780–04016	SCREW, FLAT HEAD	1	1	1	1		
10	91690–40010	PIN, SPRING	1	1	1	1		
11	93210–25552	O-RING	2	2	2	2		
12	90338–25004	PLUG	1	1	1	1		
13	93210–25647	O-RING	1	1	1	1		
14	90119–06276	BOLT, WITH WASHER	1	1	1	1		
15	6DA–14664–01	GROMMET, WATER SHUT	1	1	1	1		
16	93210–12648	O-RING	1	1	1	1		
17	90105–10406	BOLT, FLANGE	10	10	10	10		
18	90119–08M66	BOLT, WITH WASHER	10	10	10	10		
19	63P–11351–03	GASKET, CYLINDER	1	1	1	1		
20	6DA–11500–00	BALANCER ASSY	1	1	1	1		
21	90105–10406	BOLT, FLANGE	4	4	4	4		
22	90105–08175	BOLT, FLANGE	12	12	12	12		
23	63P–11512–00	SEAL, CRANK COVER	2	2	2	2		
24	6DA–15411–00–9S	COVER, CRANKCASE 1	1	1	1	1		
25	6DA–15451–01	GASKET, CRANKCASE COVER 1	1	1	1	1		
26	90119–06MA3	BOLT, WITH WASHER	10	10	10	10		
27	91690–40010	PIN, SPRING	1	1	1	1		

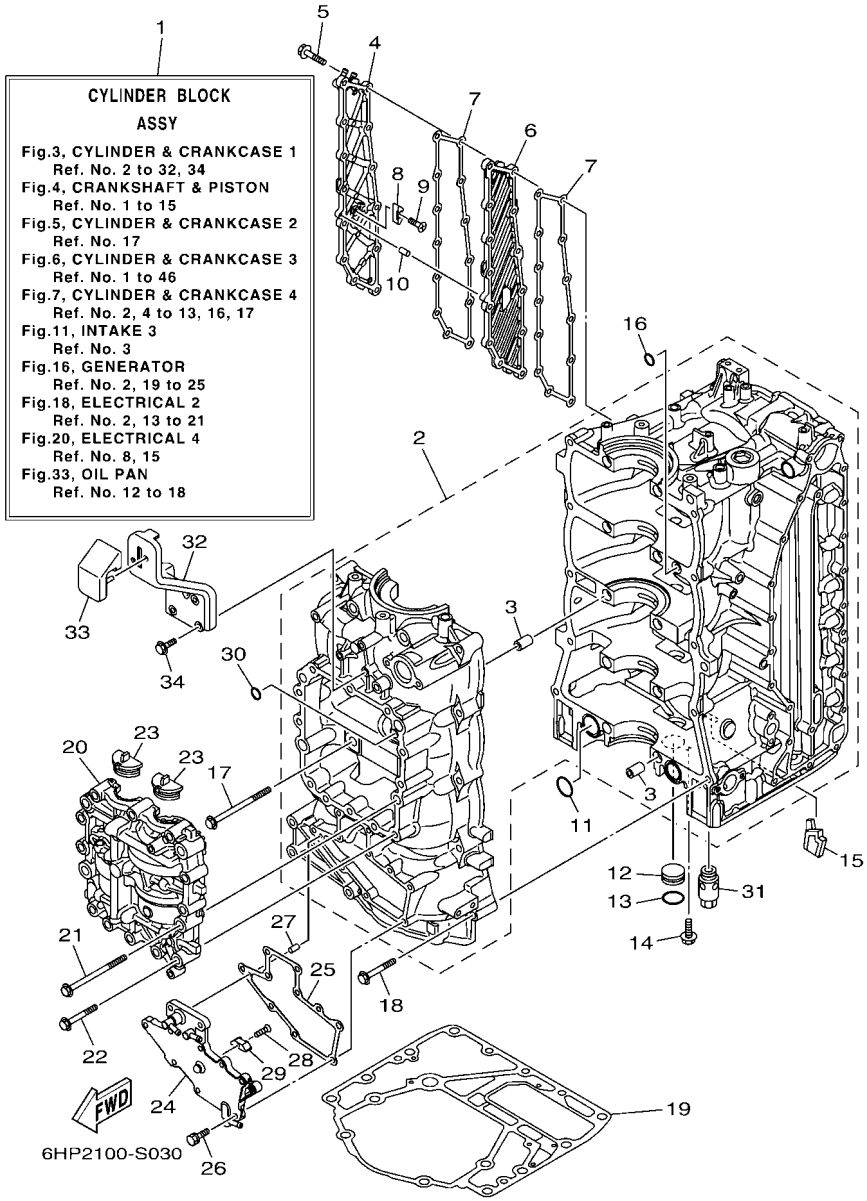

FIG. 3 CYLINDER & CRANKCASE 1

REF. NO.	PART NO.	DESCRIPTION	XCA	XCA2	LCA	LCA2		REMARKS
28	98780–04016	SCREW, FLAT HEAD	1	1	1	1		
29	6E5–11325–00	ANODE	1	1	1	1		
30	93210–08001	O-RING	1	1	1	1		
31	63P–13490–00	RELIEF VALVE ASSY	1	1	1	1		
32	6DA–42744–00	STAY	1	1	1	1		
33	6DA–42662–01	DAMPER	1	1	1	1		
34	90105–06196	BOLT, FLANGE	3	3	3	3		

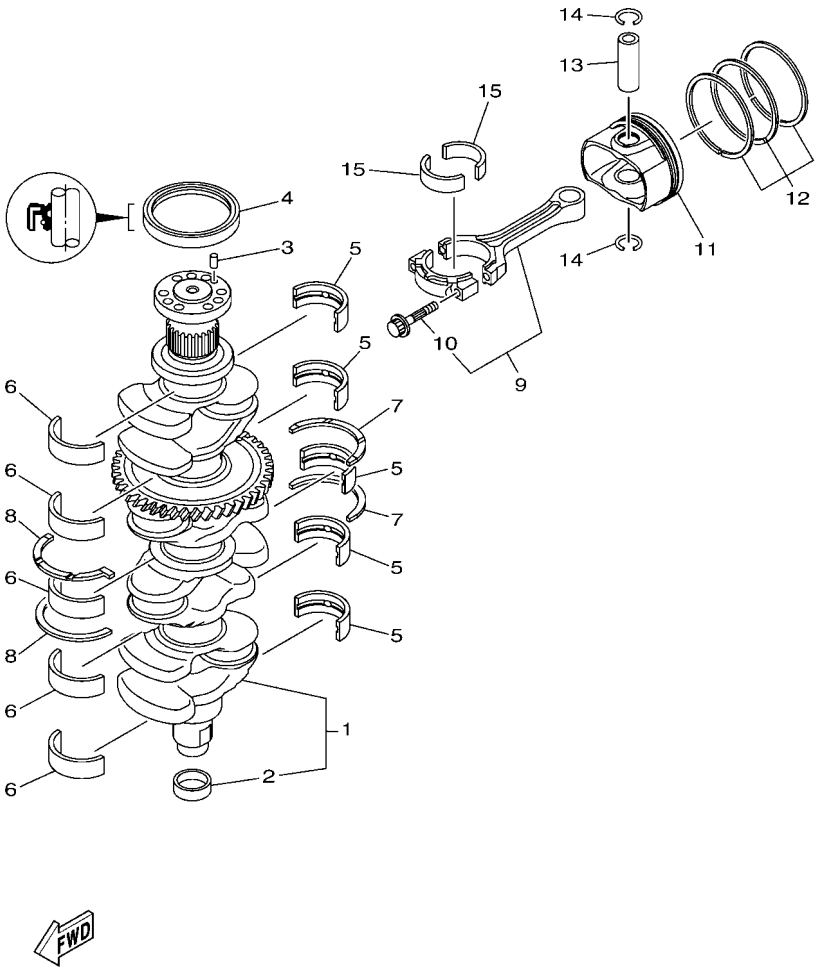

6EH8100-U040

FIG. 4 CRANKSHAFT & PISTON

REF. NO.	PART NO.	DESCRIPTION	XCA	XCA2	LCA	LCA2		REMARKS
1	6DA–11410–00	CRANKSHAFT	1	1	1	1		
2	6CB–11478–00	.COLLAR	1	1	1	1		
3	93606–12019	PIN, DOWEL	1	1	1	1		
4	93102–85008	OIL SEAL	1	1	1	1		
5	6DA–11416–00	PLANE BEARING, CRANKSHAFT 1	5	5	5	5		UR YELLOW
	6DA–11416–10	PLANE BEARING, CRANKSHAFT 1	5	5	5	5		UR GREEN
	6DA–11416–20	PLANE BEARING, CRANKSHAFT 1	5	5	5	5		UR BLUE
6	6DA–11417–00	PLANE BEARING, CRANKSHAFT 2	5	5	5	5		UR YELLOW
	6DA–11417–10	PLANE BEARING, CRANKSHAFT 2	5	5	5	5		UR GREEN
	6DA–11417–20	PLANE BEARING, CRANKSHAFT 2	5	5	5	5		UR BLUE
7	6DA–11426–00	BEARING, THRUST 1	2	2	2	2		
8	6DA–11427–00	BEARING, THRUST 2	2	2	2	2		
9	6CB–W1165–10	CONNECTING ROD ASSY	4	4	4	4		
10	63P–11654–10	.BOLT, CONNECTING ROD	2	2	2	2		
11	6DA–11631–20–94	PISTON (STD)	4	4	4	4		
12	6CB–11603–00	PISTON RING SET (STD)	4	4	4	4		
13	6CB–11633–00	PIN, PISTON	4	4	4	4		
14	K0F–A3233–00	RING,HOLE SNAP	8	8	8	8		
15	6JD–11656–00	PLANE BEARING, CONNECTING ROD	8	8	8	8		UR BLACK
	6JD–11656–10	PLANE BEARING, CONNECTING ROD	8	8	8	8		UR PINK
	6JD–11656–20	PLANE BEARING, CONNECTING ROD	8	8	8	8		UR RED

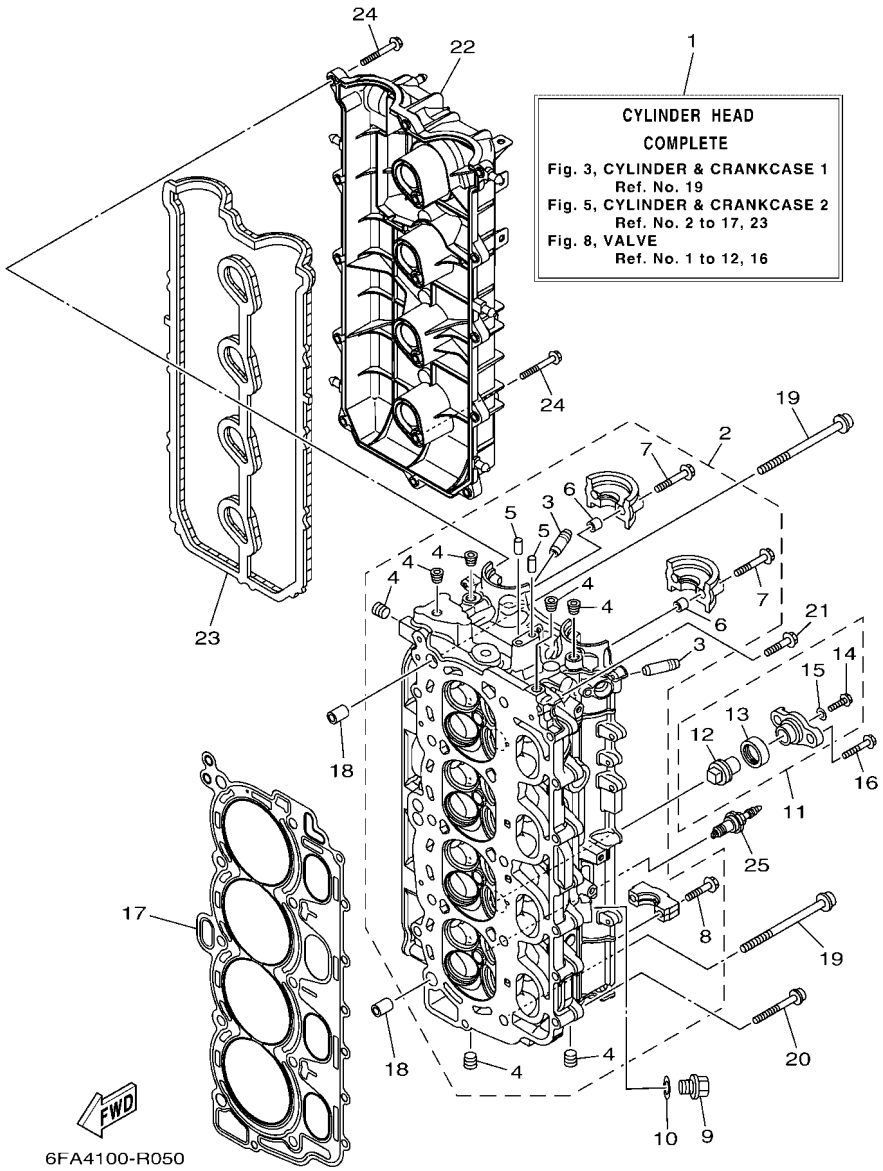

FIG. 5 CYLINDER & CRANKCASE 2

REF. NO.	PART NO.	DESCRIPTION	XCA	XCA2	LCA	LCA2		REMARKS
1	6FA–W009A–03–9S	CYLINDER HEAD COMPLETE	1	1	1	1		
2	6FA–11110–02–9S	CYLINDER HEAD ASSY	1	1	1	1		
3	6DA–11133–10	.GUIDE, VALVE 1	16	16	16	16		
4	90344–51019	.PLUG, TAPER SCREW	7	7	7	7		
5	93606–12019	.PIN, DOWEL	2	2	2	2		
6	91809–08006	.PIN, DOWEL	4	4	4	4		
7	90119–07001	.BOLT, WITH WASHER	4	4	4	4		
8	90119–07234	.BOLT, WITH WASHER	16	16	16	16		
9	90340–14M06	PLUG, STRAIGHT SCREW	1	1	1	1		
10	90430–14115	GASKET	1	1	1	1		
11	67F–11301–01	ANODE COVER ASSY	2	2	2	2		
12	67F–11325–01	.ANODE	1	1	1	1		
13	67F–11328–01	.GROMMET, ANODE	1	1	1	1		
14	90105–06M07	.BOLT, FLANGE	1	1	1	1		
15	90430–06M03	.GASKET	1	1	1	1		
16	95D95–08025	BOLT, FLANGE DEEP RECESS	4	4	4	4		
17	6DA–11181–00	GASKET, CYLINDER HEAD 1	1	1	1	1		
18	90387–11005	COLLAR	2	2	2	2		
19	90149–11001	SCREW	10	10	10	10		
20	90105–08175	BOLT, FLANGE	8	8	8	8		
21	90105–06151	BOLT, FLANGE	1	1	1	1		
22	6DA–11191–00	COVER, CYLINDER HEAD 1	1	1	1	1		
23	6DA–11193–00	GASKET, HEAD COVER 1	1	1	1	1		
24	95D95–06030	BOLT, FLANGE DEEP RECESS	16	16	16	16		
25	94702–00400	PLUG, SPARK (NGK LFR6A-11)	4	4	4	4		

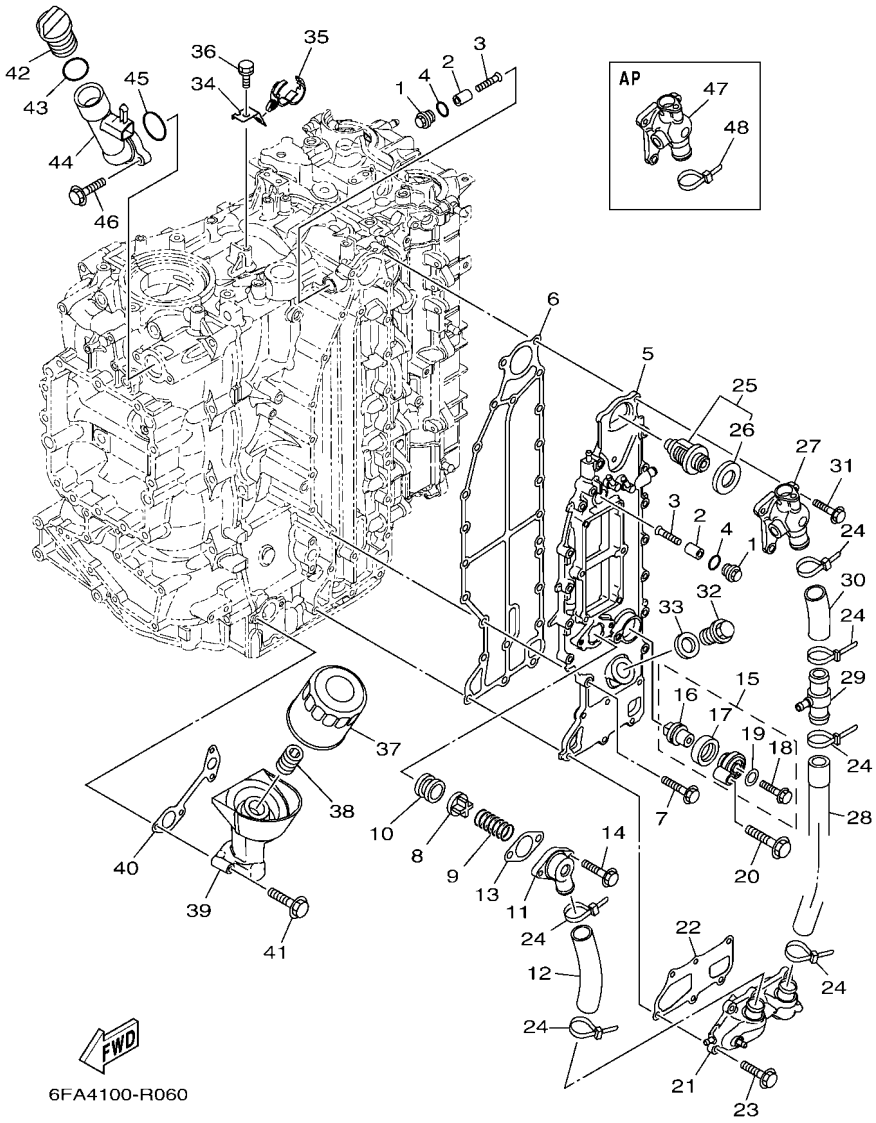

FIG. 6 CYLINDER & CRANKCASE 3

REF. NO.	PART NO.	DESCRIPTION	XCA	XCA2	LCA	LCA2		REMARKS
1	6G8–11197–A0	PLUG, BLIND	2	2	2	2		
2	68T–11325–00	ANODE	2	2	2	2		
3	90151–05M05	SCREW, COUNTERSUNK	2	2	2	2		
4	93210–13M63	O-RING	2	2	2	2		
5	6DA–41113–00–9S	OUTER COVER, EXHAUST	1	1	1	1		
6	6DA–41114–01	GASKET, EXHAUST OUTER COVER	1	1	1	1		
7	90105–06028	BOLT, FLANGE	14	14	14	14		
8	60H–12416–00	VALVE, PRESSURE CONTROL	1	1	1	1		
9	90501–16M11	SPRING, COMPRESSION	1	1	1	1		
10	90480–20M05	GROMMET	1	1	1	1		
11	6G5–11372–00	COVER, BYPASS 2	1	1	1	1		
12	6DA–1243A–00	HOSE 1	1	1	1	1		
13	60V–11382–A0	GASKET 2	1	1	1	1		
14	90119–06MA3	BOLT, WITH WASHER	2	2	2	2		
15	69J–11301–01	ANODE COVER ASSY	1	1	1	1		
16	67F–11325–01	.ANODE	1	1	1	1		
17	67F–11328–01	.GROMMET, ANODE	1	1	1	1		
18	90105–06M07	.BOLT, FLANGE	1	1	1	1		
19	90430–06M03	.GASKET	1	1	1	1		
20	97E75–08540	BOLT, HEXAGON W/W DEEP RECESS	1	1	1	1		
21	6DA–12527–00–9S	COVER, WATER BY-PASS	1	1	1	1		
22	6DA–11381–01	GASKET 1	1	1	1	1		
23	90105–06028	BOLT, FLANGE	6	6	6	6		
24	90465–11M59	CLAMP	6	6	6	6		
25	6DA–12411–01	THERMOSTAT	1	1	1	1		
26	6AW–12412–00	.SEAL, THERMOSTAT	1	1	1	1		
27	6DA–12413–A0–9S	COVER, THERMOSTAT	1	1	1	1		

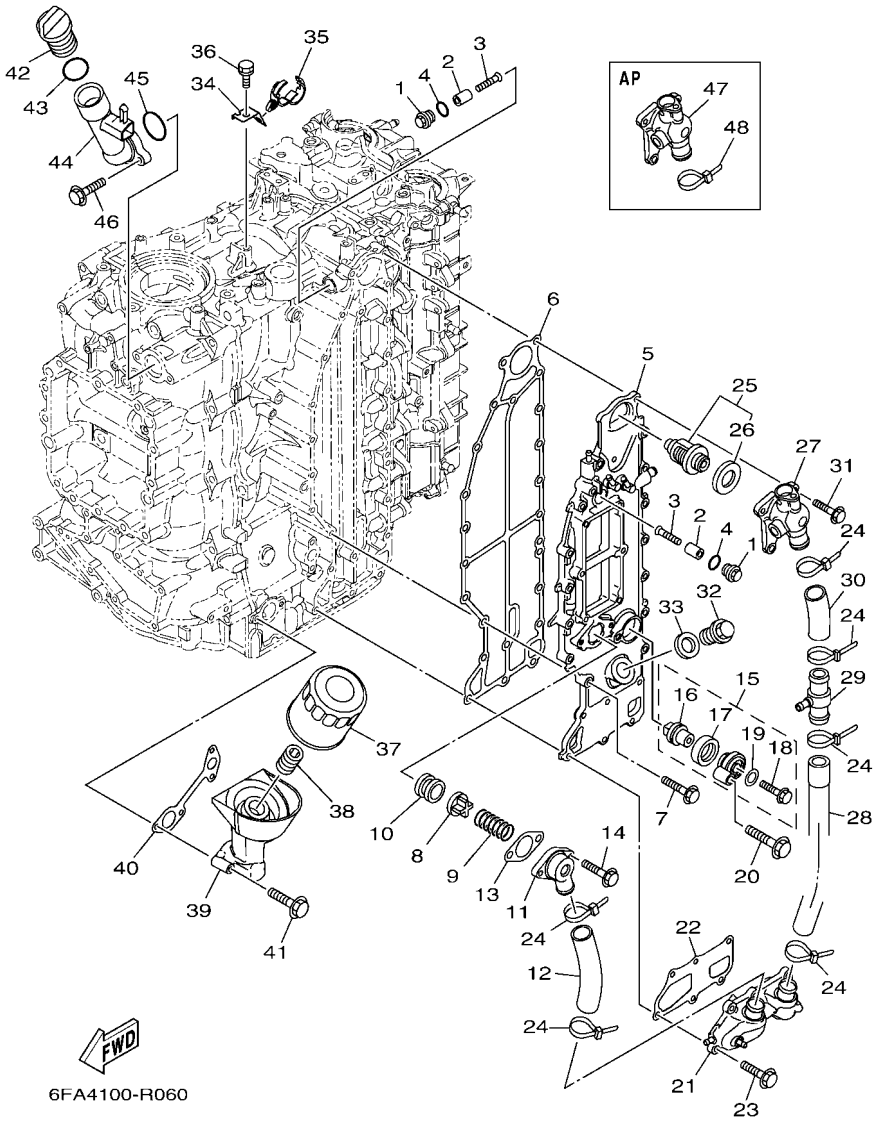

FIG. 6 CYLINDER & CRANKCASE 3

REF. NO.	PART NO.	DESCRIPTION	XCA	XCA2	LCA	LCA2		REMARKS
28	6DA–1243E–00	HOSE 2	1	1	1	1		
29	6CE–24378–00	PIPE, JOINT 3	1	1	1	1		
30	6DA–1244H–00	HOSE 5	1	1	1	1		
31	90105–06028	BOLT, FLANGE	3	3	3	3		
32	90340–18M09	PLUG, STRAIGHT SCREW	1	1	1	1		
33	90201–186F1	WASHER, PLATE	1	1	1	1		
34	6DA–12491–00	CLAMP 1	1	1	1	1		
35	90464–20181	CLAMP	1	1	1	1		
36	90119–06078	BOLT, WITH WASHER	1	1	1	1		
37	69J–13440–04	ELEMENT ASSY, OIL CLEANER	1	1	1	1		
38	6S5–12858–00	BOLT, UNION	1	1	1	1		
39	6DA–13446–01	CONNECTOR	1	1	1	1		
40	6DA–13475–00	GASKET	1	1	1	1		
41	90105–06151	BOLT, FLANGE	4	4	4	4		
42	6G8–15363–00	PLUG, OIL	1	1	1	1		
43	93210–24M79	O-RING	1	1	1	1		
44	6DA–15319–00	JOINT	1	1	1	1		
45	93210–357A3	O-RING	1	1	1	1		
46	90105–06037	BOLT, FLANGE	2	2	2	2		
47	6DA–1241B–A0–9S	COVER, THERMOSTAT 2	1	1	1	1		AP WATER TEMP SENSOR
48	90465–11M59	CLAMP	1	1	1	1		AP WATER TEMP SENSOR

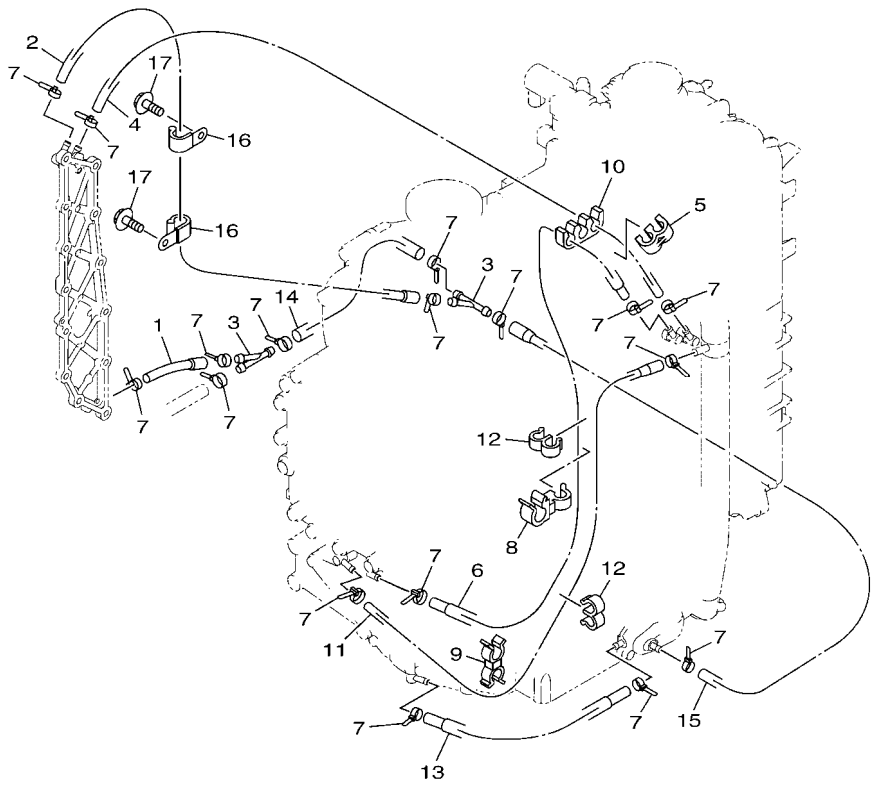

6EH5100-R070

FIG. 7 CYLINDER & CRANKCASE 4

REF. NO.	PART NO.	DESCRIPTION	XCA	XCA2	LCA	LCA2		REMARKS
1	6DA–12576–00	HOSE 1	1	1	1	1		
2	6DA–12589–00	HOSE 6	1	1	1	1		
3	6CE–24377–00	PIPE, JOINT 2	2	2	2	2		
4	90445–09008	HOSE (L470)	1	1	1	1		
5	90464–09M21	CLAMP	1	1	1	1		
6	6DA–12578–00	HOSE 3	1	1	1	1		
7	90465–11M10	CLAMP	17	17	17	17		
8	90464–12010	CLAMP	1	1	1	1		
9	90464–09142	CLAMP	1	1	1	1		
10	90464–09020	CLAMP	1	1	1	1		
11	6DA–12579–00	HOSE 4	1	1	1	1		
12	90464–09M31	CLAMP	2	2	2	2		
13	6DA–12552–00	HOSE 8	1	1	1	1		
14	90445–10057	HOSE (L170)	1	1	1	1		
15	6DA–12589–00	HOSE 6	1	1	1	1		
16	90465–08M83	CLAMP	2	2	2	2		
17	95D95–06012	BOLT, FLANGE DEEP RECESS	2	2	2	2		

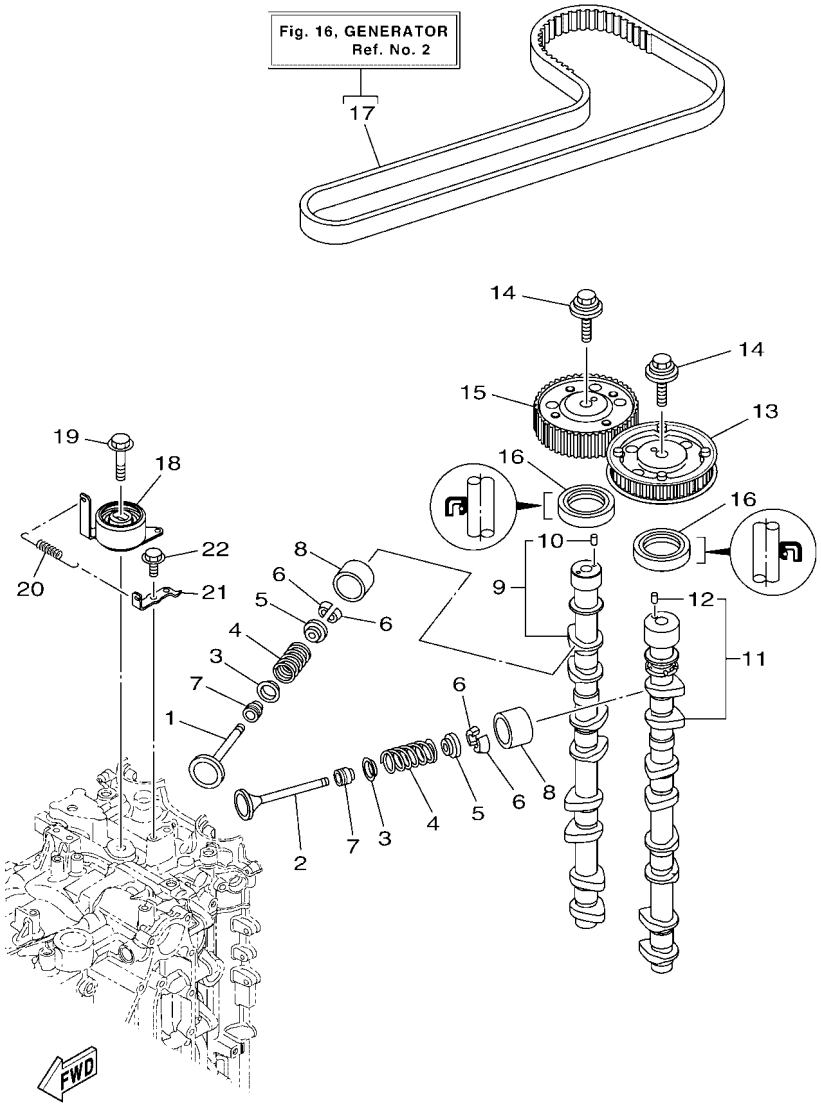

6FA1100-N080

FIG. 8 VALVE

REF. NO.	PART NO.	DESCRIPTION	XCA	XCA2	LCA	LCA2		REMARKS
1	6CB–12111–00	VALVE, INTAKE	8	8	8	8		
2	6DA–12121–00	VALVE, EXHAUST	8	8	8	8		
3	K0F–A3743–00	SEAT, VALVE SPRING	16	16	16	16		
4	6CB–12113–00	SPRING, VALVE INNER	16	16	16	16		
5	K0F–A3741–00	RETAINER, VALVE SPRING	16	16	16	16		
6	K0F–A3742–00	LOCK, VALVE SPRING RETAINER	32	32	32	32		
7	51Y–12119–00	SEAL, VALVE STEM	16	16	16	16		
8	K0F–A3751–00	LIFTER, VALVE (3.000)	16	16	16	16		UR
	K0F–A3751–10	LIFTER, VALVE (3.025)	16	16	16	16		UR
	K0F–A3751–20	LIFTER, VALVE (3.050)	16	16	16	16		UR
	K0F–A3751–30	LIFTER, VALVE (3.075)	16	16	16	16		UR
	K0F–A3751–40	LIFTER, VALVE (3.100)	16	16	16	16		UR
	K0F–A3751–50	LIFTER, VALVE (3.122)	16	16	16	16		UR
	K0F–A3751–60	LIFTER, VALVE (3.142)	16	16	16	16		UR
	K0F–A3751–70	LIFTER, VALVE (3.162)	16	16	16	16		UR
	K0F–A3751–80	LIFTER, VALVE (3.182)	16	16	16	16		UR
	K0F–A3751–90	LIFTER, VALVE (3.202)	16	16	16	16		UR
	K0F–A3751–A0	LIFTER, VALVE (3.222)	16	16	16	16		UR
	K0F–A3751–B0	LIFTER, VALVE (3.242)	16	16	16	16		UR
	K0F–A3751–C0	LIFTER, VALVE (3.262)	16	16	16	16		UR
	K0F–A3751–D0	LIFTER, VALVE (3.282)	16	16	16	16		UR
	K0F–A3751–E0	LIFTER, VALVE (3.302)	16	16	16	16		UR
	K0F–A3751–F0	LIFTER, VALVE (3.322)	16	16	16	16		UR
	K0F–A3751–G0	LIFTER, VALVE (3.342)	16	16	16	16		UR
	K0F–A3751–H0	LIFTER, VALVE (3.362)	16	16	16	16		UR
	K0F–A3751–J0	LIFTER, VALVE (3.382)	16	16	16	16		UR
	K0F–A3751–K0	LIFTER, VALVE (3.402)	16	16	16	16		UR

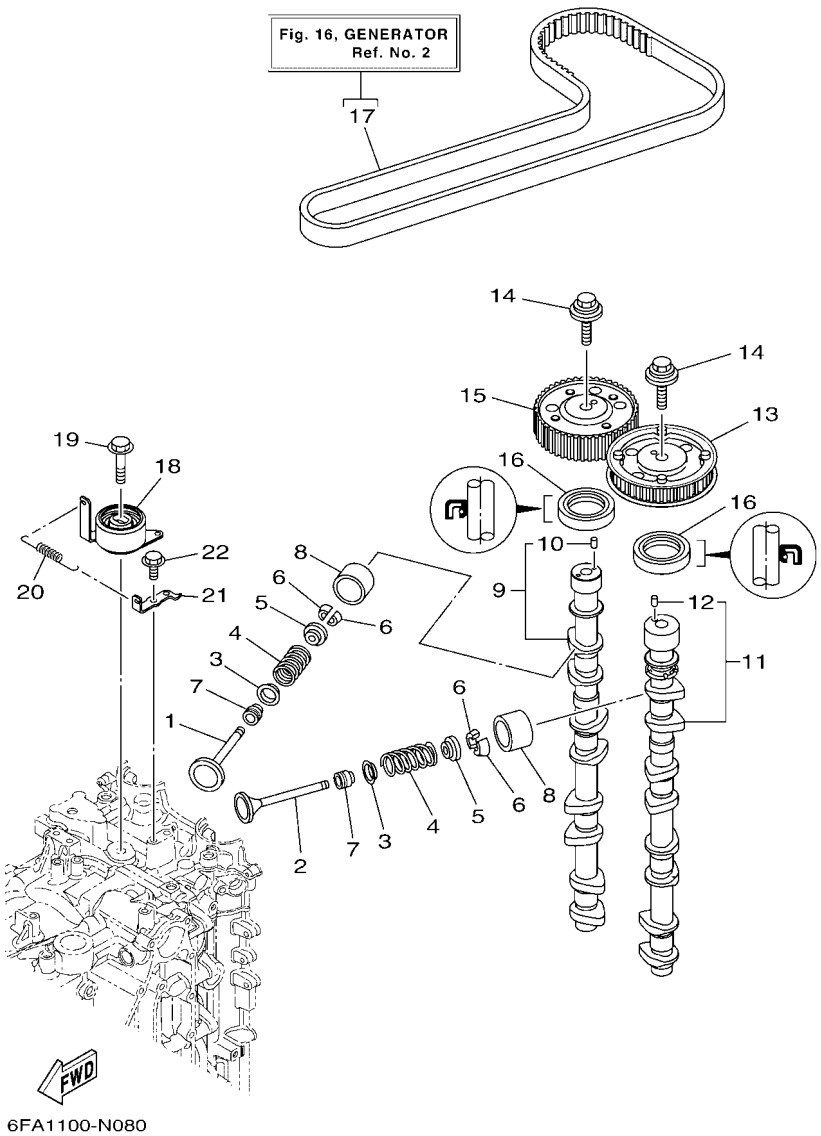

6FA1100-N080

FIG. 8 VALVE

REF. NO.	PART NO.	DESCRIPTION	XCA	XCA2	LCA	LCA2		REMARKS
8	K0F–A3751–L0	LIFTER, VALVE (3.422)	16	16	16	16		UR
	K0F–A3751–M0	LIFTER, VALVE (3.442)	16	16	16	16		UR
	K0F–A3751–N0	LIFTER, VALVE (3.462)	16	16	16	16		UR
	K0F–A3751–P0	LIFTER, VALVE (3.482)	16	16	16	16		UR
	K0F–A3751–R0	LIFTER, VALVE (3.502)	16	16	16	16		UR
	K0F–A3751–S0	LIFTER, VALVE (3.522)	16	16	16	16		UR
	K0F–A3751–T0	LIFTER, VALVE (3.542)	16	16	16	16		UR
	K0F–A3753–00	LIFTER, VALVE (3.562)	16	16	16	16		UR
	K0F–A3753–10	LIFTER, VALVE (3.582)	16	16	16	16		UR
	K0F–A3753–20	LIFTER, VALVE (3.602)	16	16	16	16		UR
	K0F–A3753–30	LIFTER, VALVE (3.625)	16	16	16	16		UR
	K0F–A3753–40	LIFTER, VALVE (3.650)	16	16	16	16		UR
	K0F–A3753–50	LIFTER, VALVE (3.675)	16	16	16	16		UR
	K0F–A3753–60	LIFTER, VALVE (3.700)	16	16	16	16		UR
	K0F–A3753–70	LIFTER, VALVE (3.725)	16	16	16	16		UR
9	6FA–12171–00	CAMSHAFT 1	1	1	1	1		
10	93605–10108	.PIN, DOWEL	1	1	1	1		
11	6DA–12181–01	CAMSHAFT 2	1	1	1	1		
12	93605–10108	.PIN, DOWEL	1	1	1	1		
13	6FA–115A0–00	DRIVEN GEAR ASSY	1	1	1	1		
14	90119–10050	BOLT, WITH WASHER	2	2	2	2		
15	6FA–11567–00	GEAR, DRIVEN 2	1	1	1	1		
16	93102–38008	OIL SEAL	2	2	2	2		
17	6DA–W4624–00	BELT (WITH ROTOR BOLTS)	1	1	1	1		
18	6DA–11590–00	TENSIONER ASSY	1	1	1	1		
19	90119–10M07	BOLT, WITH WASHER	1	1	1	1		
20	90506–18025	SPRING, TENSION	1	1	1	1		

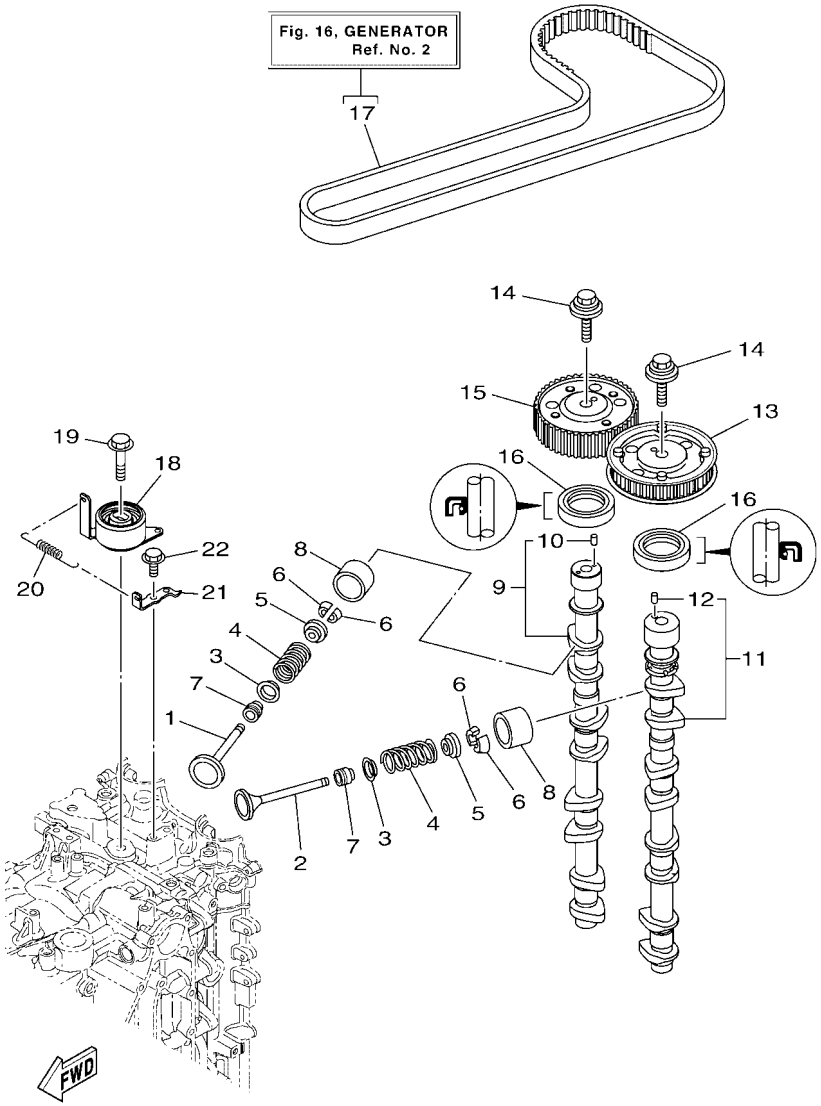

6FA1100-N080

FIG. 8 VALVE

REF. NO.	PART NO.	DESCRIPTION	XCA	XCA2	LCA	LCA2		REMARKS
21	6DA–11595–00	PLATE,VALVE	1	1	1	1		
22	97E75–06516	BOLT, HEXAGON W/W DEEP RECESS	1	1	1	1		

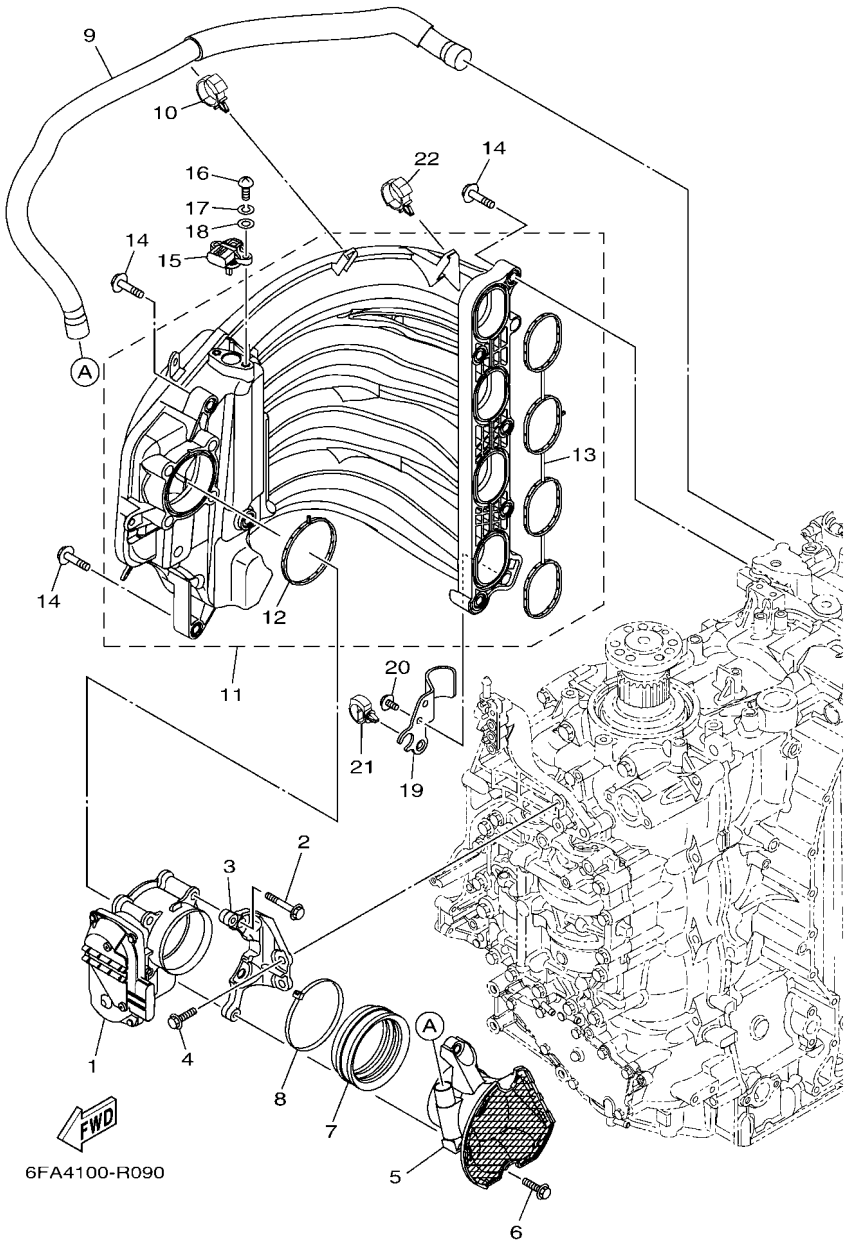

FIG. 9 INTAKE 1

REF. NO.	PART NO.	DESCRIPTION	XCA	XCA2	LCA	LCA2		REMARKS
1	6DA–13751–01	BODY, THROTTLE 1	1	1	1	1		
2	97E75–08560	BOLT, HEXAGON W/W DEEP RECESS	4	4	4	4		
3	6DA–13152–00	STAY 2	1	1	1	1		
4	95D75–06025	BOLT, FLANGE DEEP RECESS	2	2	2	2		
5	6DA–14440–00	SILENCER ASSY, INTAKE	1	1	1	1		
6	95D75–06025	BOLT, FLANGE DEEP RECESS	2	2	2	2		
7	6P2–1441J–01	PIPE, SILENCER	1	1	1	1		
8	90464–99004	CLAMP	1	1	1	1		
9	6DA–15373–00	PIPE, BREATHER	1	1	1	1		
10	90464–12183	CLAMP	1	1	1	1		
11	6DA–13641–00	MANIFOLD, INTAKE 1	1	1	1	1		
12	6DA–13646–00	.GASKET, MANIFOLD 2	1	1	1	1		
13	6DA–13645–00	.GASKET, MANIFOLD 1	1	1	1	1		
14	90119–08020	BOLT, WITH WASHER	9	9	9	9		
15	68F–83688–10	SENSOR ASSY	1	1	1	1		
16	97885–05016	SCREW, PAN HEAD	2	2	2	2		
17	92995–05100	WASHER	2	2	2	2		
18	92995–05600	WASHER	2	2	2	2		
19	6DA–13881–00	COVER 1	1	1	1	1		
20	95D95–06012	BOLT, FLANGE DEEP RECESS	2	2	2	2		
21	90464–20181	CLAMP	1	1	1	1		
22	90464–12183	CLAMP	1	1	1	1		

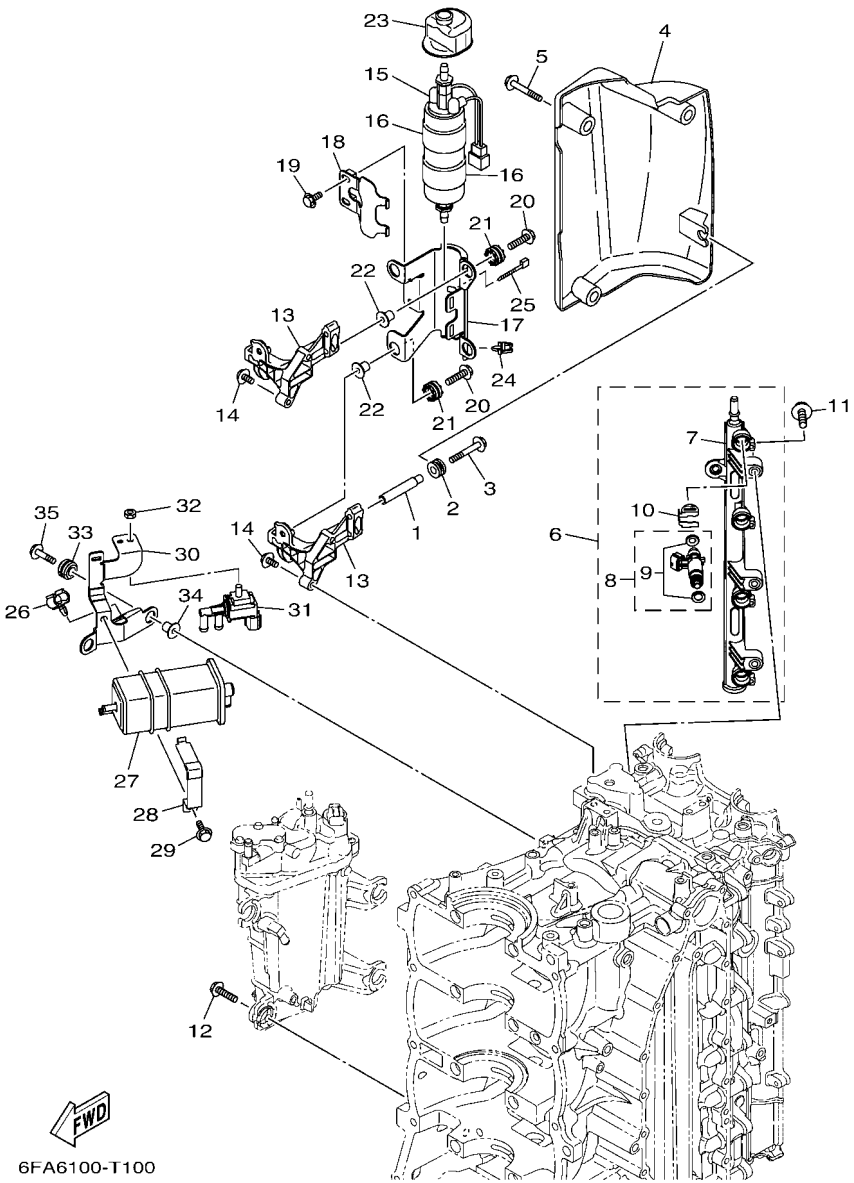

FIG. 10 INTAKE 2

REF. NO.	PART NO.	DESCRIPTION	XCA	XCA2	LCA	LCA2		REMARKS
1	90387–06283	COLLAR	1	1	1	1		
2	90480–12314	GROMMET	1	1	1	1		
3	90105–06054	BOLT, FLANGE	1	1	1	1		
4	6DA–13564–00	COVER, MANIFOLD	1	1	1	1		
5	95D95–06020	BOLT, FLANGE DEEP RECESS	3	3	3	3		
6	6DA–13160–01	DELIVERY PIPE ASSY 1	1	1	1	1		
7	6DA–13161–01	.PIPE, DELIVERY 1	1	1	1	1		
8	6DA–13761–00	.INJECTOR	4	4	4	4		
9	6AW–1410B–00	..PACKING KIT	1	1	1	1		
10	6AW–13577–10	.CLIP	4	4	4	4		
11	90105–06M08	BOLT, FLANGE	3	3	3	3		
12	90119–06299	BOLT, WITH WASHER	4	4	4	4		
13	6DA–24425–00	BRACKET, FUEL PUMP 1	2	2	2	2		
14	90105–06M08	BOLT, FLANGE	4	4	4	4		
15	6GR–24410–01	FUEL PUMP ASSY	1	1	1	1		
16	6DA–24492–01	BUSH, FUEL PUMP	2	2	2	2		
17	6DA–24491–00	BRACKET, FUEL PUMP	1	1	1	1		
18	6DA–24426–00	BRACKET, FUEL PUMP 2	1	1	1	1		
19	95D95–06012	BOLT, FLANGE DEEP RECESS	2	2	2	2		
20	90119–06309	BOLT, WITH WASHER	4	4	4	4		
21	60V–85516–00	SPACER	4	4	4	4		
22	90387–06289	COLLAR	4	4	4	4		
23	6DA–24462–00	CAP, BLIND	1	1	1	1		
24	90464–11121	CLAMP	1	1	1	1		
25	90465–11M10	CLAMP	1	1	1	1		
26	90464–09130	CLAMP	1	1	1	1		
27	6P2–24170–00	CANISTER ASSY	1	1	1	1		

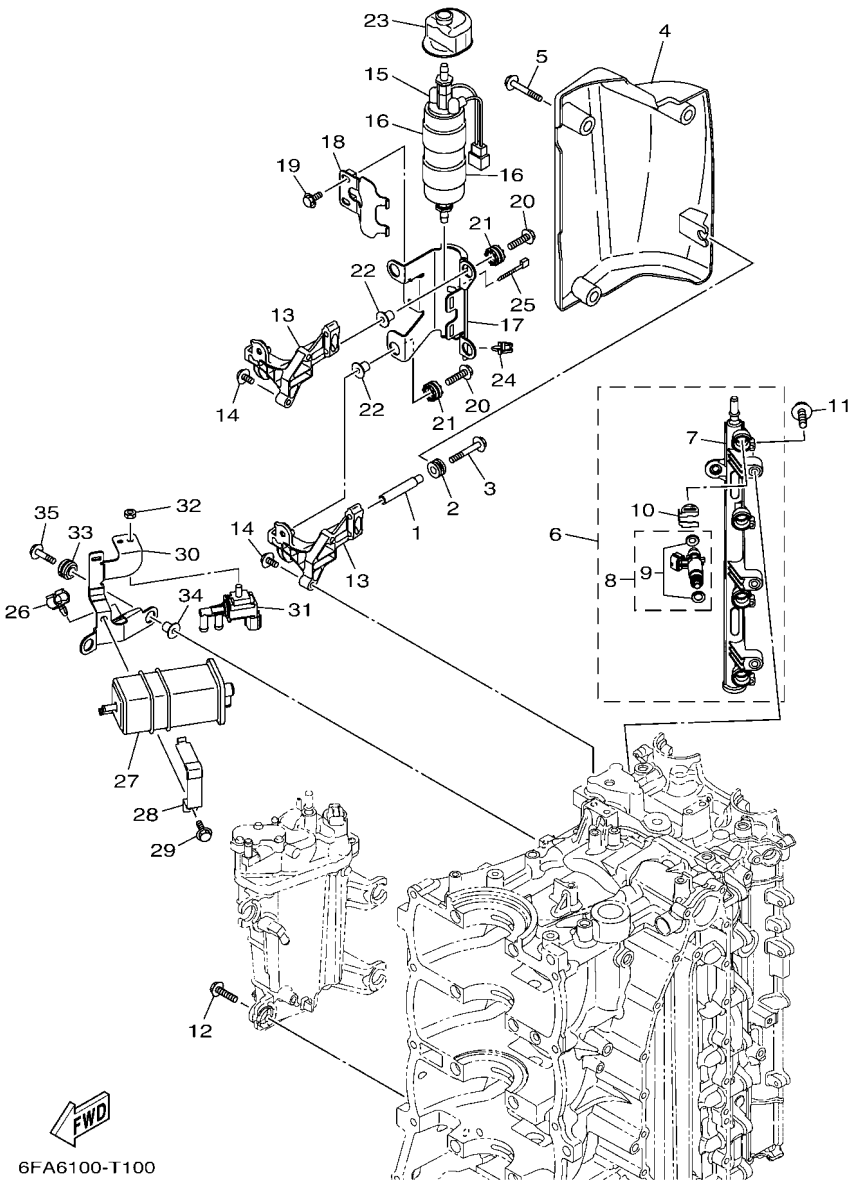

FIG. 10 INTAKE 2

REF. NO.	PART NO.	DESCRIPTION	XCA	XCA2	LCA	LCA2		REMARKS
28	63P–2419A–01	HOLDER	1	1	1	1		
29	95D95–06016	BOLT, FLANGE DEEP RECESS	1	1	1	1		
30	6DA–2134X–00	BRACKET, CANISTER	1	1	1	1		
31	6C5–86120–00	SOLENOID VALVE ASSY	1	1	1	1		
32	95380–06600	NUT, HEXAGON	1	1	1	1		
33	90480–14031	GROMMET	2	2	2	2		
34	90387–06289	COLLAR	2	2	2	2		
35	90119–06309	BOLT, WITH WASHER	2	2	2	2		

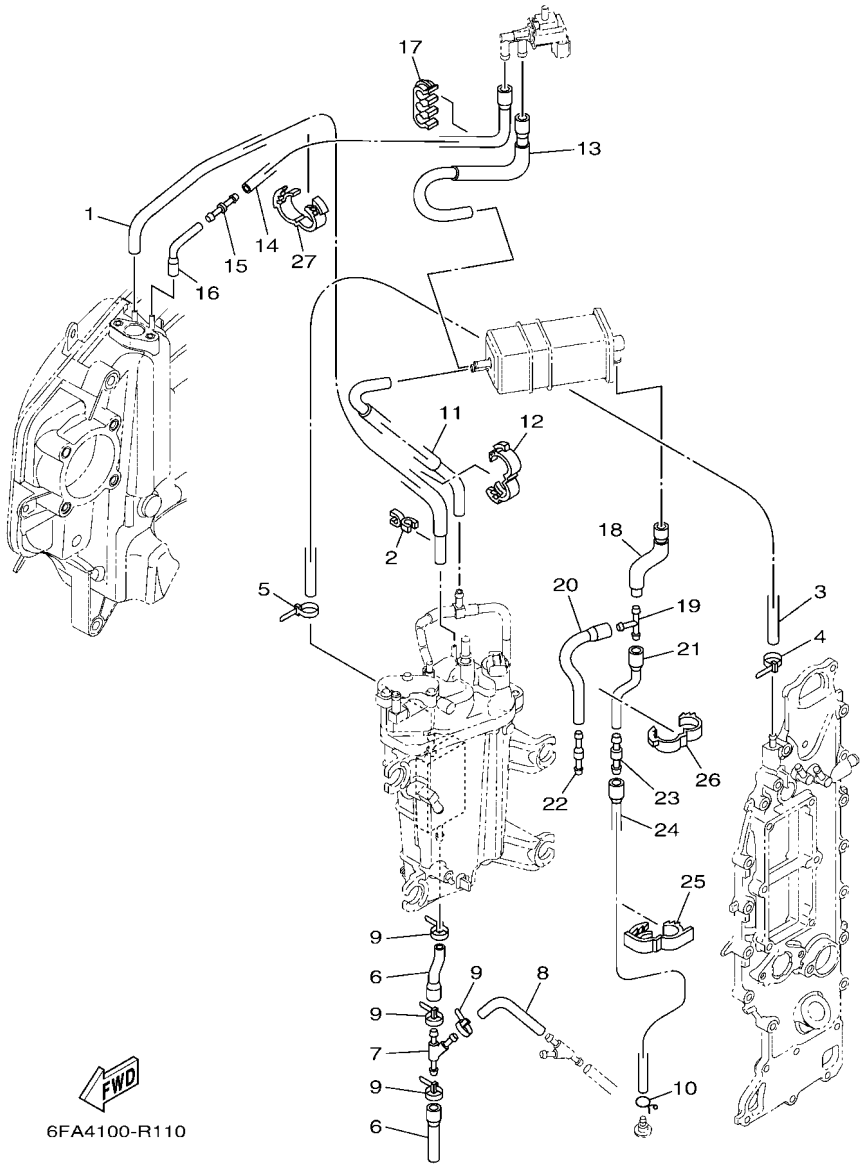

FIG. 11 INTAKE 3

REF. NO.	PART NO.	DESCRIPTION	XCA	XCA2	LCA	LCA2		REMARKS
1	6DA–13532–00	HOSE, VACUUM SENSING 3	1	1	1	1		
2	90464–07M41	CLAMP	1	1	1	1		
3	90445–09120	HOSE (L600)	1	1	1	1		
4	90465–11M10	CLAMP	1	1	1	1		
5	90465–11M10	CLAMP	1	1	1	1		
6	6DA–12576–00	HOSE 1	2	2	2	2		
7	6CE–24377–00	PIPE, JOINT 2	1	1	1	1		
8	90445–10056	HOSE (L85)	1	1	1	1		
9	90465–11M10	CLAMP	4	4	4	4		
10	90467–09M09	CLIP	1	1	1	1		
11	6DA–1475A–00	PIPE 1	1	1	1	1		
12	90464–16001	CLAMP	1	1	1	1		
13	6DA–1475F–00	PIPE 3	1	1	1	1		
14	6DA–2416A–00	HOSE	1	1	1	1		
15	6CB–14989–00	ORIFICE, AIR VENT	1	1	1	1		
16	6DA–1475G–00	PIPE 4	1	1	1	1		
17	90464–10011	CLAMP	1	1	1	1		
18	6DA–13545–00	HOSE 1	1	1	1	1		
19	688–24378–00	PIPE, JOINT 3	1	1	1	1		
20	68V–13546–10	HOSE 2	1	1	1	1		
21	6FA–13548–00	HOSE, AIR 4	1	1	1	1		
22	6E5–21744–00	BREATHER	1	1	1	1		
23	63D–21744–00	BREATHER	1	1	1	1		
24	6FA–13547–00	HOSE 3	1	1	1	1		
25	90464–18004	CLAMP	1	1	1	1		
26	90464–16001	CLAMP	1	1	1	1		
27	90464–16001	CLAMP	1	1	1	1		

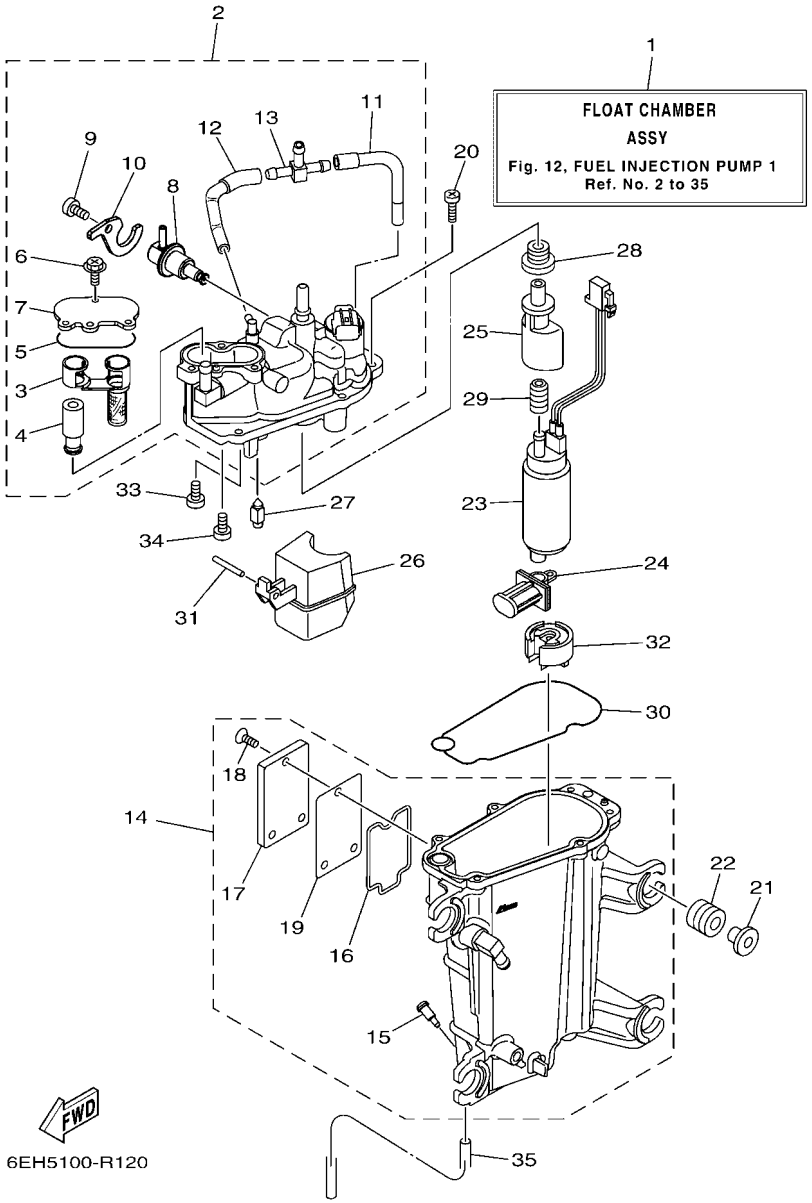

FIG. 12 FUEL INJECTION PUMP 1

REF. NO.	PART NO.	DESCRIPTION	XCA	XCA2	LCA	LCA2		REMARKS
1	6DA–14180–02	FLOAT CHAMBER ASSY	1	1	1	1		
2	6DA–14182–00	COVER, FLOAT CHAMBER	1	1	1	1		
3	6CB–24501–01	.FILTER, FUEL	1	1	1	1		
4	6CB–24460–00	.RELIEF VALVE ASSY	1	1	1	1		
5	6CB–13016–00	.O-RING	1	1	1	1		
6	6CB–14216–00	.SCREW	3	3	3	3		
7	6CB–24217–00	.COVER	1	1	1	1		
8	6CB–13906–01	.REGULATOR, PRESSURE	1	1	1	1		
9	6CB–14564–00	.SCREW	1	1	1	1		
10	6DA–14146–00	.PLATE	1	1	1	1		
11	6DA–13892–00	.HOSE, AIR 2	1	1	1	1		
12	6DA–13893–00	.HOSE, AIR 3	1	1	1	1		
13	69J–24379–00	.PIPE, JOINT 4	1	1	1	1		
14	6DA–14181–00	BODY, FLOAT CHAMBER 1	1	1	1	1		
15	6P2–14191–00	.PLUG, DRAIN	1	1	1	1		
16	6CB–14239–00	.SEAL	1	1	1	1		
17	6CB–24452–10	.COVER	1	1	1	1		
18	6CB–14429–01	.SCREW	3	3	3	3		
19	6CB–24482–00	.GASKET 1	1	1	1	1		
20	63P–14567–00	SCREW	6	6	6	6		
21	63P–13716–00	COLLAR	4	4	4	4		
22	6CB–13593–00	DAMPER	4	4	4	4		
23	6P2–13907–21	FUEL PUMP COMP.	1	1	1	1		
24	63P–13915–00	FILTER	1	1	1	1		
25	6AW–13132–00	JOINT	1	1	1	1		
26	6CB–14985–00	FLOAT	1	1	1	1		
27	6CB–14546–00	VALVE, NEEDLE	1	1	1	1		

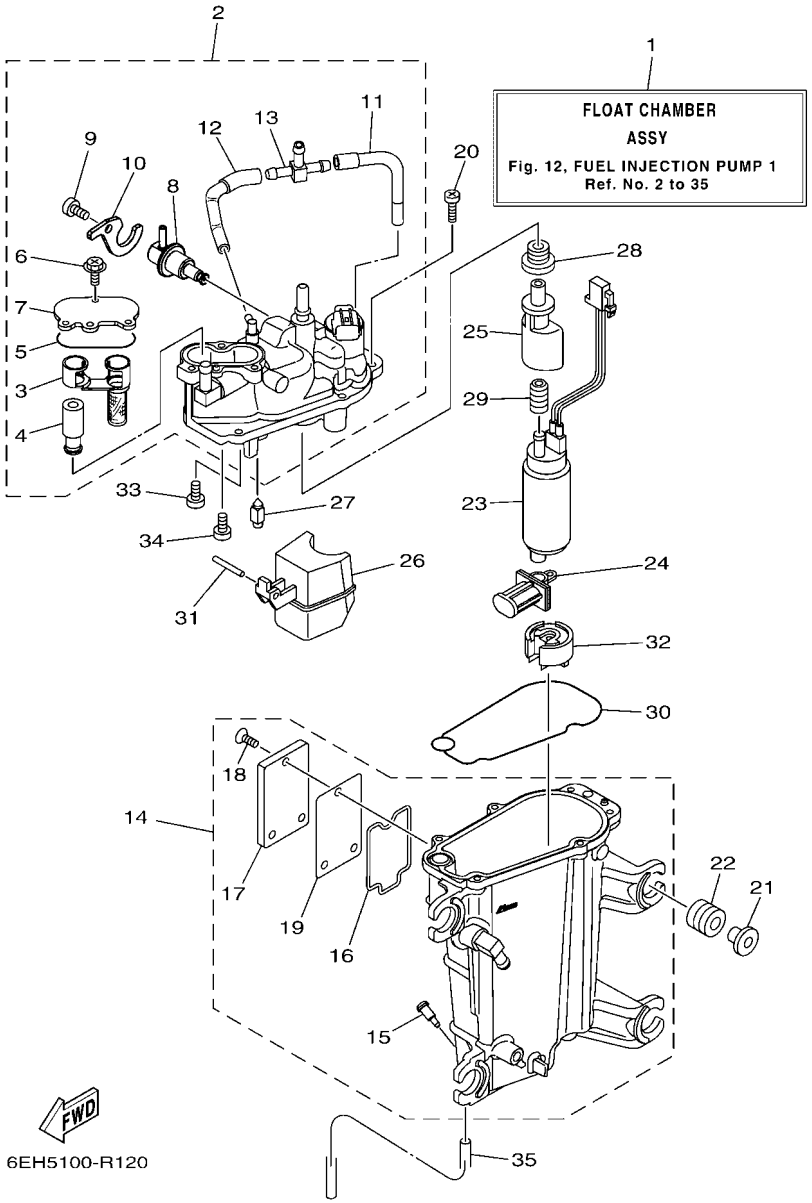

FIG. 12 FUEL INJECTION PUMP 1

REF. NO.	PART NO.	DESCRIPTION	XCA	XCA2	LCA	LCA2		REMARKS
28	6CB–1447B–00	BUSH 1	1	1	1	1		
29	6AW–13781–00	DAMPER, PUMP	1	1	1	1		
30	6CB–14984–00	GASKET, FLOAT CHAMBER	1	1	1	1		
31	6P2–14386–00	PIN, FLOAT	1	1	1	1		
32	6AW–13784–00	COVER, PUMP	1	1	1	1		
33	4SV–24453–00	SCREW	1	1	1	1		
34	98507–04008	SCREW, PAN HEAD	1	1	1	1		
35	6P2–14149–00	PIPE	1	1	1	1		

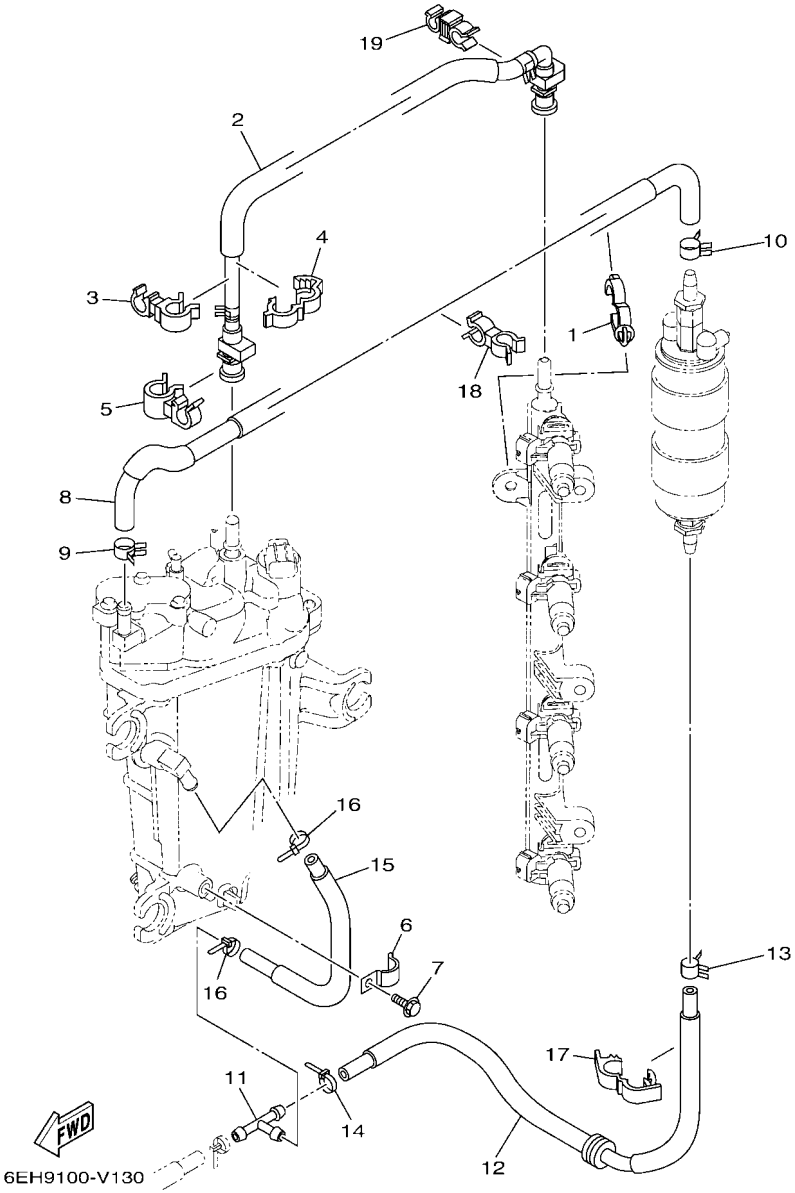

FIG. 13 FUEL INJECTION PUMP 2

REF. NO.	PART NO.	DESCRIPTION	XCA	XCA2	LCA	LCA2		REMARKS
1	90464–20181	CLAMP	1	1	1	1		
2	6DA–24310–01	FUEL PIPE ASSY	1	1	1	1		
3	90464–12010	CLAMP	1	1	1	1		
4	90464–16003	CLAMP	1	1	1	1		
5	90464–15007	CLAMP	1	1	1	1		
6	90465–08M63	CLAMP	1	1	1	1		
7	95D95–06010	BOLT, FLANGE DEEP RECESS	1	1	1	1		
8	6DA–24324–00	PIPE 13	1	1	1	1		
9	90467–120A7	CLIP	1	1	1	1		
10	90467–140A9	CLIP	1	1	1	1		
11	6E5–24378–00	PIPE, JOINT 3	1	1	1	1		
12	6DA–24317–00	PIPE 7	1	1	1	1		
13	90467–141A2	CLIP	1	1	1	1		
14	90465–11M10	CLAMP	1	1	1	1		
15	6DA–24323–00	PIPE 12	1	1	1	1		
16	90465–11M10	CLAMP	2	2	2	2		
17	90464–18004	CLAMP	1	1	1	1		
18	90464–13260	CLAMP	1	1	1	1		
19	90464–13013	CLAMP	1	1	1	1		

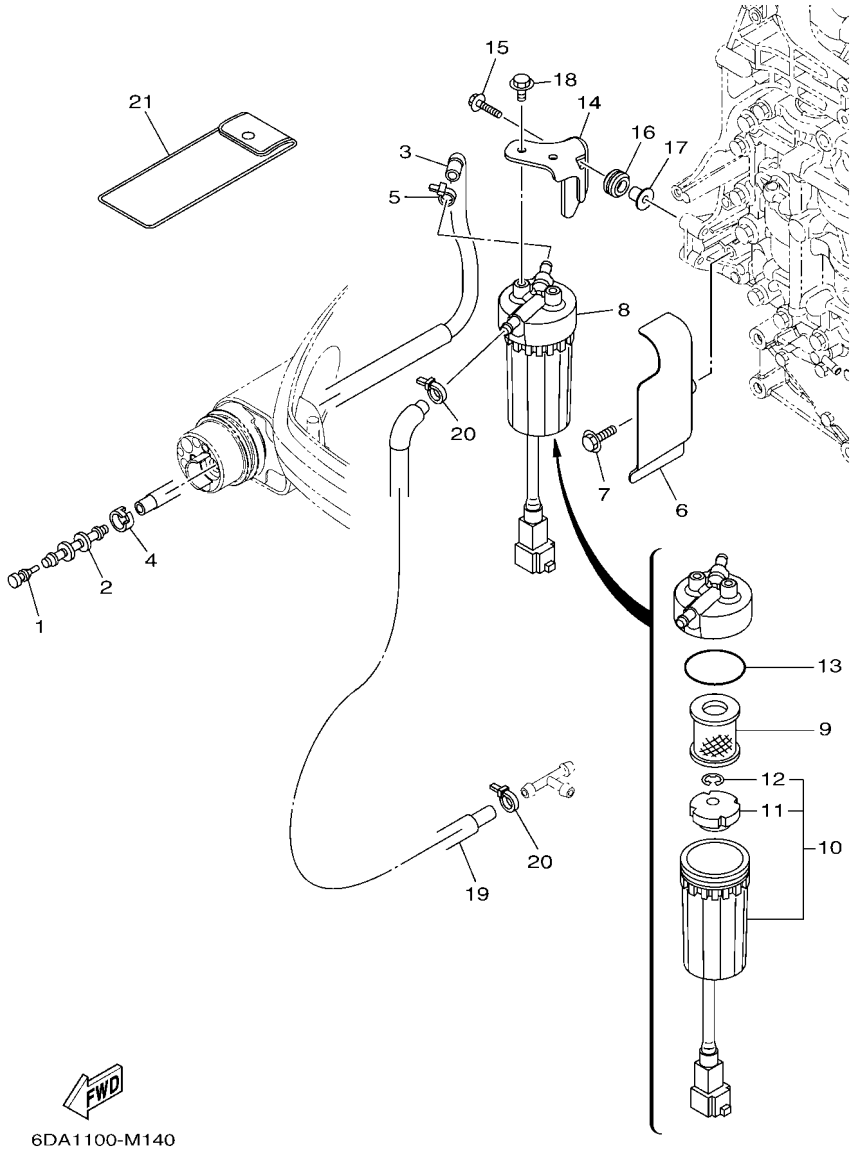

FIG. 14 FUEL 1

REF. NO.	PART NO.	DESCRIPTION	XCA	XCA2	LCA	LCA2		REMARKS
1	689–85547–01	DAMPER	1	1	1	1		
2	6AW–24377–01	PIPE, JOINT 2	1	1	1	1		
3	6DA–24314–00	PIPE 4	1	1	1	1		
4	6E5–24351–51	BAND 1	1	1	1	1		
5	90465–11M10	CLAMP	1	1	1	1		
6	6DA–24596–00	COVER	1	1	1	1		
7	95D95–06025	BOLT, FLANGE DEEP RECESS	2	2	2	2		
8	6P3–24560–04	FILTER ASSY	1	1	1	1		
9	6P3–24563–02	.ELEMENT, FILTER	1	1	1	1		
10	6P3–24562–03	.CUP, FILTER	1	1	1	1		
11	6P3–24469–00	..FLOAT, WATER LEVEL	1	1	1	1		
12	6P3–24519–00	..CLIP	1	1	1	1		
13	6P3–24564–00	.GASKET	1	1	1	1		
14	6DA–24566–00	BRACKET, FILTER	1	1	1	1		
15	90119–06309	BOLT, WITH WASHER	2	2	2	2		
16	90480–15013	GROMMET	2	2	2	2		
17	90387–06289	COLLAR	2	2	2	2		
18	95D95–06012	BOLT, FLANGE DEEP RECESS	2	2	2	2		
19	6DA–24313–00	PIPE 3	1	1	1	1		
20	90465–11M10	CLAMP	2	2	2	2		
21	69J–28100–03	TOOL KIT	1	1	1	1		AP

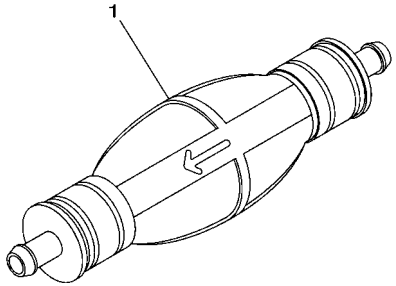

68VC100-L120

FIG. 15 FUEL 2

REF. NO.	PART NO.	DESCRIPTION	XCA	XCA2	LCA	LCA2		REMARKS
1	6YK–24360–73	PRIMER PUMP ASSY	1	1	1	1		AP

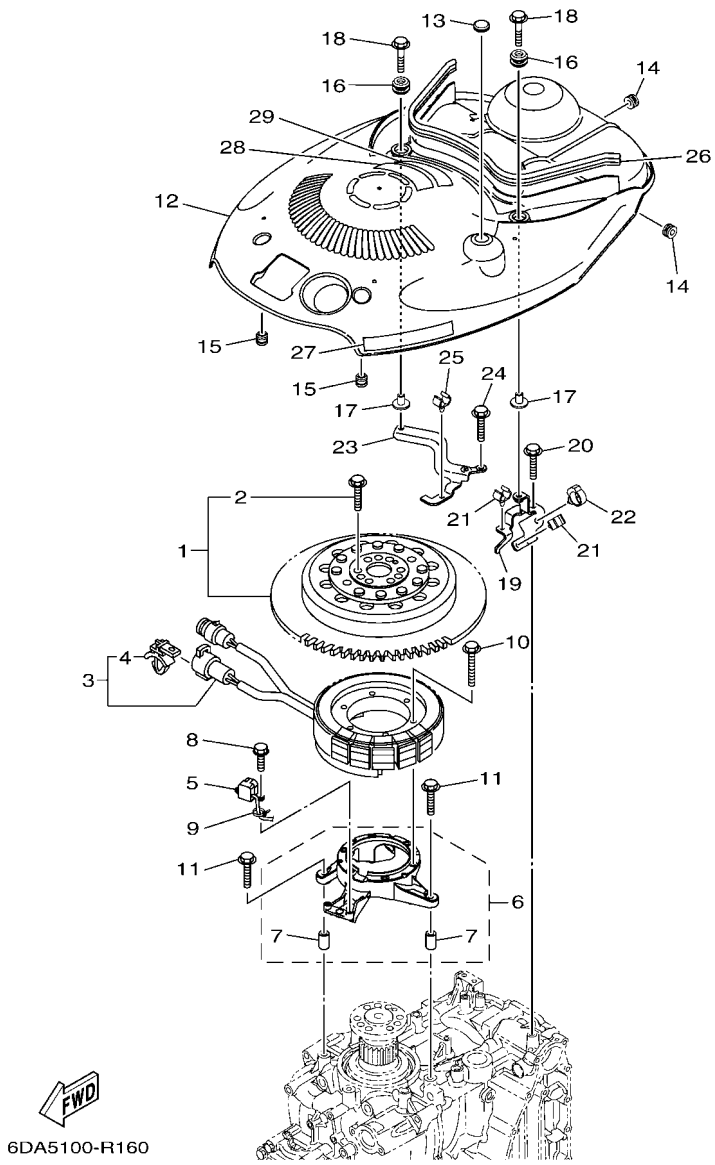

FIG. 16 GENERATOR

REF. NO.	PART NO.	DESCRIPTION	XCA	XCA2	LCA	LCA2		REMARKS
1	6DA–W8145–00	ROTOR ASSY WITH BOLTS	1	1	1	1		
2	6EK–W9010–00	.BOLT SET	1	1	1	1		
3	6DA–81410–00	STATOR ASSY	1	1	1	1		
4	90464–12002	.CLAMP	1	1	1	1		
5	6CB–85580–00	COIL, PULSER	1	1	1	1		
6	6DA–85561–00	BASE, MAGNETO	1	1	1	1		
7	99530–08012	.PIN, DOWEL	2	2	2	2		
8	97595–05520	BOLT, WITH WASHER	2	2	2	2		
9	90465–13M97	CLAMP	1	1	1	1		
10	95022–06035	BOLT, FLANGE	6	6	6	6		
11	95D95–06030	BOLT, FLANGE DEEP RECESS	4	4	4	4		
12	6DA–81337–00	COVER, FLYWHEEL	1	1	1	1		
13	90480–16025	GROMMET	1	1	1	1		
14	90480–12314	GROMMET	2	2	2	2		
15	6A0–82317–01	DAMPER, IGNITION COIL	2	2	2	2		
16	6BG–42748–01	GROMMET	2	2	2	2		
17	90387–06M69	COLLAR	2	2	2	2		
18	90119–06291	BOLT, WITH WASHER	2	2	2	2		
19	6DA–8132G–01	PLATE	1	1	1	1		
20	95D95–06016	BOLT, FLANGE DEEP RECESS	1	1	1	1		
21	90464–09130	CLAMP	2	2	2	2		
22	90464–20181	CLAMP	1	1	1	1		
23	6DA–82398–01	PLATE 3	1	1	1	1		
24	95D95–06016	BOLT, FLANGE DEEP RECESS	2	2	2	2		
25	90464–09130	CLAMP	1	1	1	1		
26	6DA–42617–00	DAMPER, FORM	1	1	1	1		
27	63P–13437–63	MARK, CAUTION	1	1	1	1		

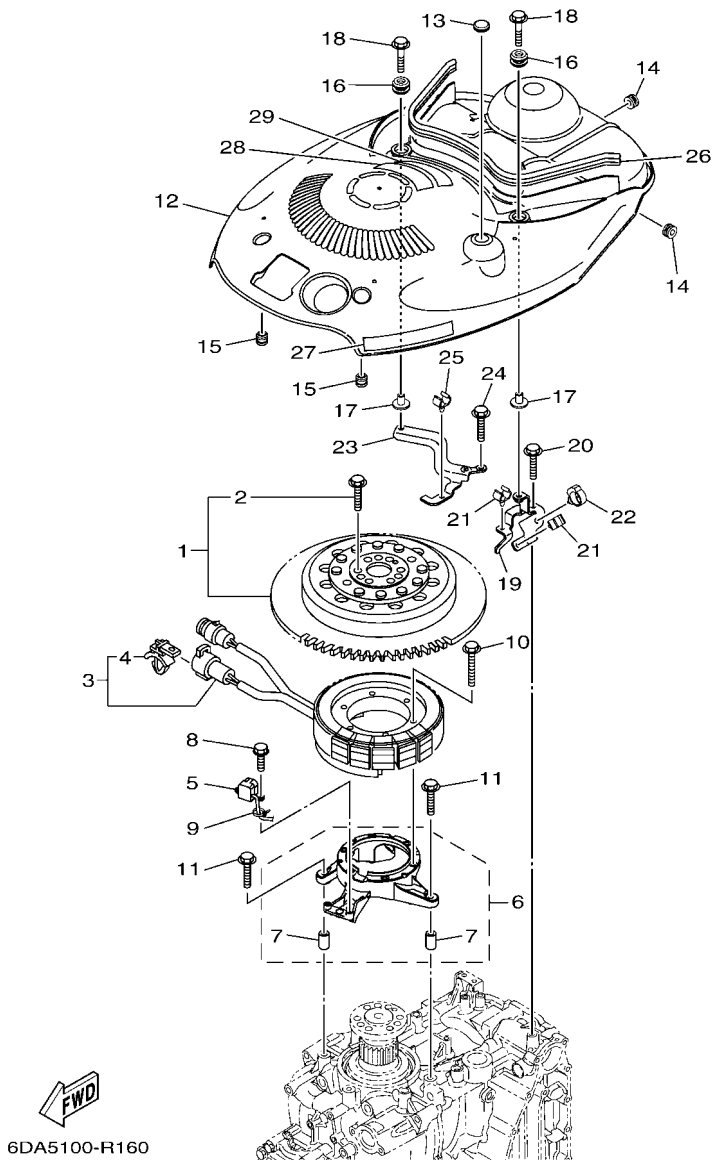

FIG. 16 GENERATOR

REF. NO.	PART NO.	DESCRIPTION	XCA	XCA2	LCA	LCA2		REMARKS
28	6EE–81994–40	LABEL, SAFETY	1	1	1	1		
29	6EE–81994–50	LABEL, SAFETY	1	1	1	1		

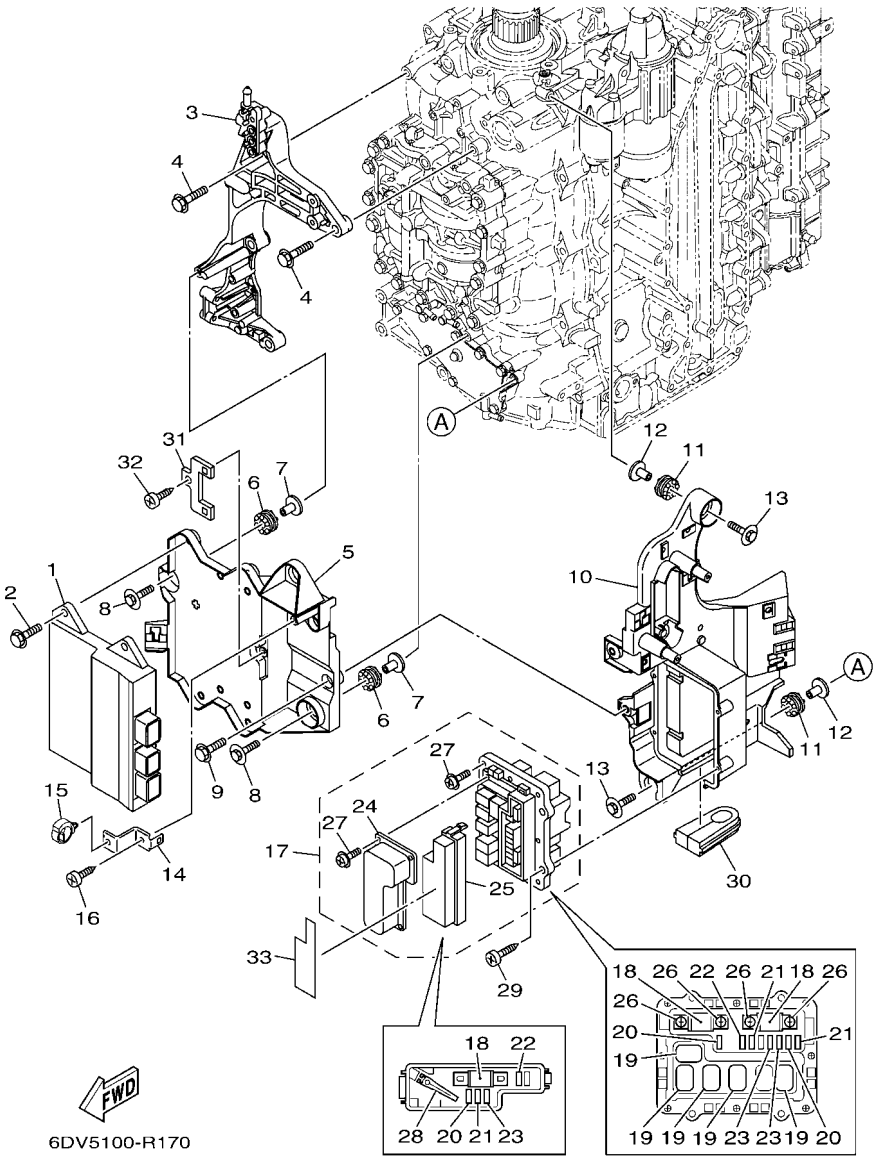

FIG. 17 ELECTRICAL 1

REF. NO.	PART NO.	DESCRIPTION	XCA	XCA2	LCA	LCA2		REMARKS
1	6HP–8591A–01	ENGINE CONTROL UNIT ASSY	1	1	1	1		
2	95D95–06020	BOLT, FLANGE DEEP RECESS	4	4	4	4		
3	6DA–85991–00	BRACKET, UNIT	1	1	1	1		
4	95D75–08035	BOLT, FLANGE DEEP RECESS	4	4	4	4		
5	6DA–81948–01	BRACKET	1	1	1	1		
6	68F–85516–01	SPACER	3	3	3	3		
7	90387–06176	COLLAR	3	3	3	3		
8	68F–85119–00	BOLT	3	3	3	3		
9	95D95–06016	BOLT, FLANGE DEEP RECESS	2	2	2	2		
10	6DA–81952–01	HOLDER, RELAY	1	1	1	1		
11	68F–85516–01	SPACER	3	3	3	3		
12	90387–06176	COLLAR	3	3	3	3		
13	68F–85119–00	BOLT	3	3	3	3		
14	6DA–85548–01	HOLDER	1	1	1	1		
15	90464–20181	CLAMP	1	1	1	1		
16	97780–60620	SCREW, TAPPING	1	1	1	1		
17	6DV–82170–11	FUSE BOX ASSY	1	1	1	1		
18	6P2–82151–00	.FUSE (60A)	3	3	3	3		
19	6AW–8195A–00	.RELAY ASSY	5	5	5	5		
20	67F–82151–40	.FUSE (10A)	3	3	3	3		
21	67F–82151–50	.FUSE (15A)	3	3	3	3		
22	67F–82151–00	.FUSE (20A)	2	2	2	2		
23	67F–82151–10	.FUSE (30A)	3	3	3	3		
24	6CB–81639–10	.COVER	1	1	1	1		
25	6CB–85544–00	.CASE	1	1	1	1		
26	68F–82846–00	.SCREW, PAN HEAD (M5)	4	4	4	4		
27	6P2–82113–00	.SCREW (M3)	13	13	13	13		

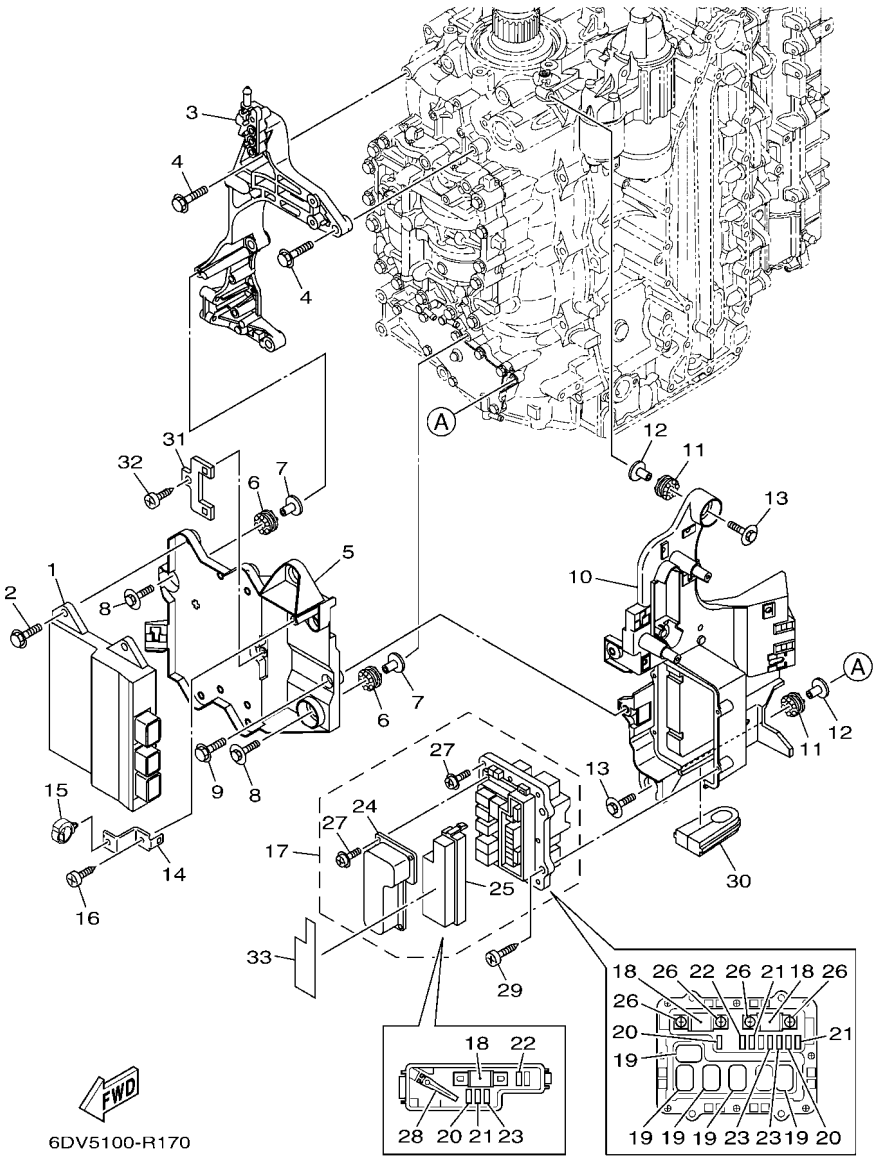

FIG. 17 ELECTRICAL 1

REF. NO.	PART NO.	DESCRIPTION	XCA	XCA2	LCA	LCA2		REMARKS
28	67F–2812A–00	.PULLER, FUSE	1	1	1	1		
29	97780–50620	SCREW, TAPPING	4	4	4	4		
30	6DA–81336–01	GROMMET	1	1	1	1		
31	6C5–8257V–00	PLATE, CONNECTOR	1	1	1	1		
32	97780–60620	SCREW, TAPPING	1	1	1	1		
33	6DV–81919–01	GRAPHIC, REGULATOR	1	1	1	1		

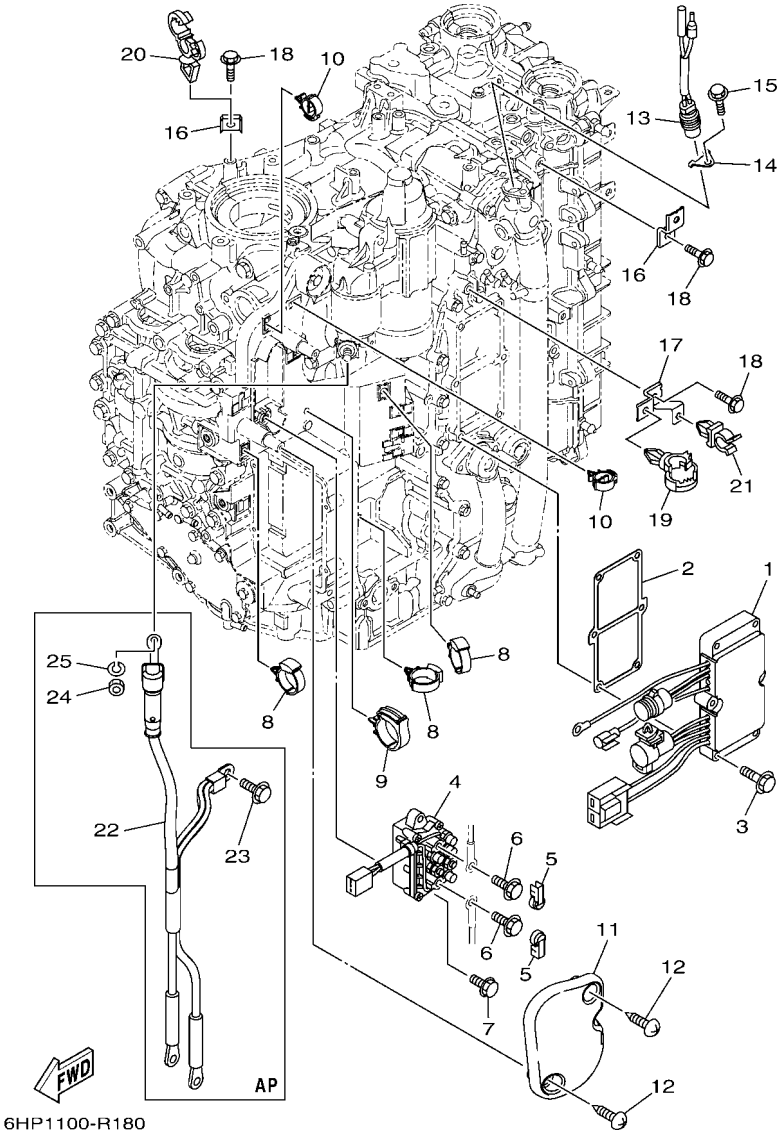

FIG. 18 ELECTRICAL 2

REF. NO.	PART NO.	DESCRIPTION	XCA	XCA2	LCA	LCA2		REMARKS
1	6DV–81960–00	RECTIFIER & REGULATOR ASSY	1	1	1	1		
2	6DA–81975–01	PLATE, RECTIFIER FITTING	1	1	1	1		
3	97E95–06535	BOLT, HEXAGON W/W DEEP RECESS	6	6	6	6		
4	6AW–81950–00	RELAY ASSY	1	1	1	1		
5	6P2–8183X–00	CAP, TERMINAL	2	2	2	2		
6	97E95–06610	BOLT, HEXAGON W/W DEEP RECESS	2	2	2	2		
7	97E95–06520	BOLT, HEXAGON W/W DEEP RECESS	2	2	2	2		
8	90464–12183	CLAMP	3	3	3	3		
9	90464–32002	CLAMP	1	1	1	1		
10	90464–18246	CLAMP	2	2	2	2		
11	6DA–81942–00	COVER	1	1	1	1		
12	90169–05M00	SCREW, TRUSS HEAD TAPPING	2	2	2	2		
13	6P2–82560–01	THERMO SWITCH ASSY	1	1	1	1		
14	6E9–82588–00	PLATE	1	1	1	1		
15	95D95–06012	BOLT, FLANGE DEEP RECESS	1	1	1	1		
16	6DA–82388–00	PLATE	2	2	2	2		
17	6DA–82389–00	PLATE 2	1	1	1	1		
18	95D95–06016	BOLT, FLANGE DEEP RECESS	3	3	3	3		
19	90464–20181	CLAMP	1	1	1	1		
20	90464–13249	CLAMP	1	1	1	1		
21	90464–09008	CLAMP	1	1	1	1		
22	6DA–82105–02	BATTERY CABLE	1	1	1	1		AP
23	95D95–08016	BOLT, FLANGE DEEP RECESS	1	1	1	1		AP
24	95333–08600	NUT	1	1	1	1		AP
25	92903–08100	WASHER, SPRING	1	1	1	1		AP

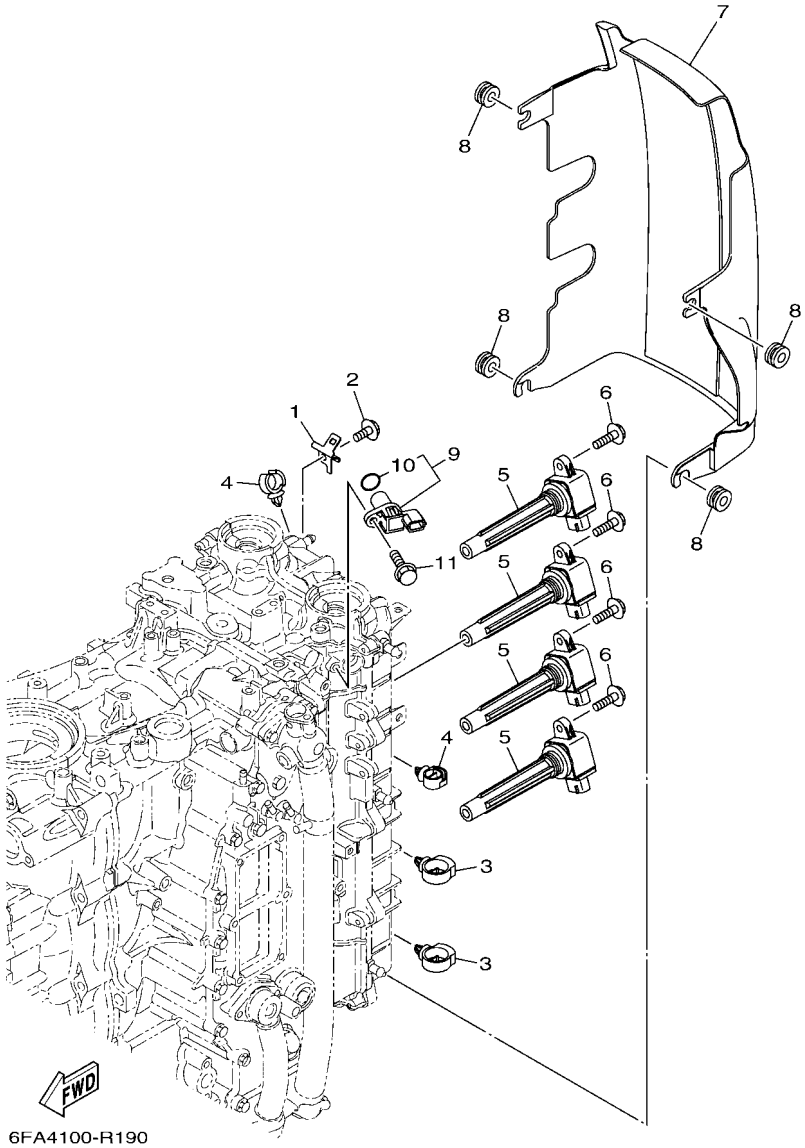

FIG. 19 ELECTRICAL 3

REF. NO.	PART NO.	DESCRIPTION	XCA	XCA2	LCA	LCA2		REMARKS
1	6D8–82389–01	PLATE 2	1	1	1	1		
2	95D95–06012	BOLT, FLANGE DEEP RECESS	1	1	1	1		
3	90464–20181	CLAMP	2	2	2	2		
4	90464–13249	CLAMP	2	2	2	2		
5	6CB–82310–00	IGNITION COIL ASSY	4	4	4	4		
6	95D95–06025	BOLT, FLANGE DEEP RECESS	4	4	4	4		
7	6DA–82314–00	COVER, IGNITION COIL	1	1	1	1		
8	90480–12314	GROMMET	4	4	4	4		
9	6P2–85896–00	SENSOR, CAM POSITION	1	1	1	1		
10	6P2–85075–00	.O-RING	1	1	1	1		
11	97E95–06520	BOLT, HEXAGON W/W DEEP RECESS	1	1	1	1		

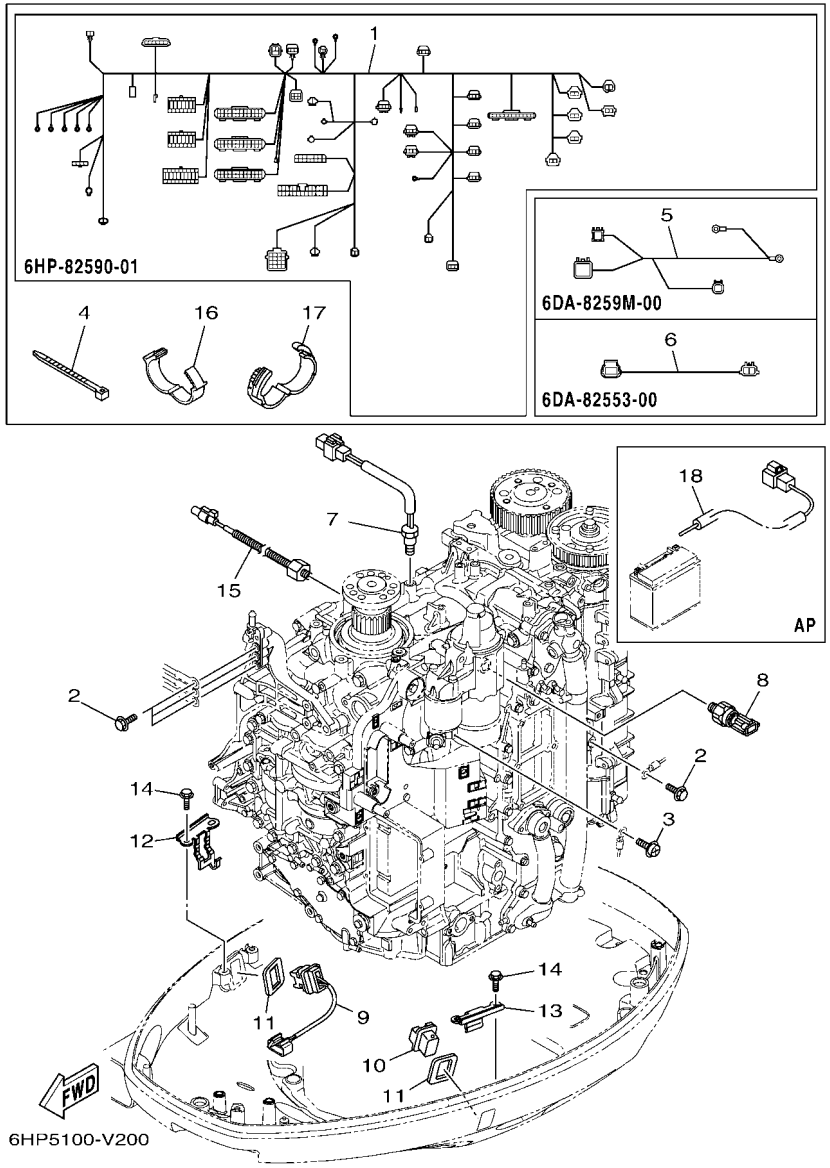

FIG. 20 ELECTRICAL 4

REF. NO.	PART NO.	DESCRIPTION	XCA	XCA2	LCA	LCA2		REMARKS
1	6HP–82590–01	WIRE HARNESS ASSY	1	1	1	1		
2	97E95–06516	BOLT, HEXAGON W/W DEEP RECESS	4	4	4	4		
3	97985–04308	SCREW, WITH WASHER	1	1	1	1		
4	90465–11M59	CLAMP	1	1	1	1		
5	6DA–8259M–00	WIRE HARNESS ASSY 2	1	1	1	1		
6	6DA–82553–00	EXTENSION, WIRE LEAD	1	1	1	1		
7	6CB–85790–00	THERMOSENSOR ASSY	1	1	1	1		
8	6AW–83651–00	SENDER, OIL PRESSURE	1	1	1	1		
9	6BR–82563–01	TRIM & TILT SWITCH ASSY	1	1	1	1		
10	69J–42723–01	COVER, BOTTOM	1	1	1	1		
11	69J–82587–01	GASKET	2	2	2	2		
12	63P–83614–01	BRACKET	1	1	1	1		
13	6DA–83614–00	BRACKET	1	1	1	1		
14	95D95–06012	BOLT, FLANGE DEEP RECESS	4	4	4	4		
15	6CJ–85780–00	SENSOR, KNOCK	1	1	1	1		
16	90464–26001	CLAMP	5	5	5	5		
17	90464–28003	CLAMP	3	3	3	3		
18	69J–81949–03	WIRE, LEAD (ISOLATOR, 3.8M)	1	1	1	1		AP

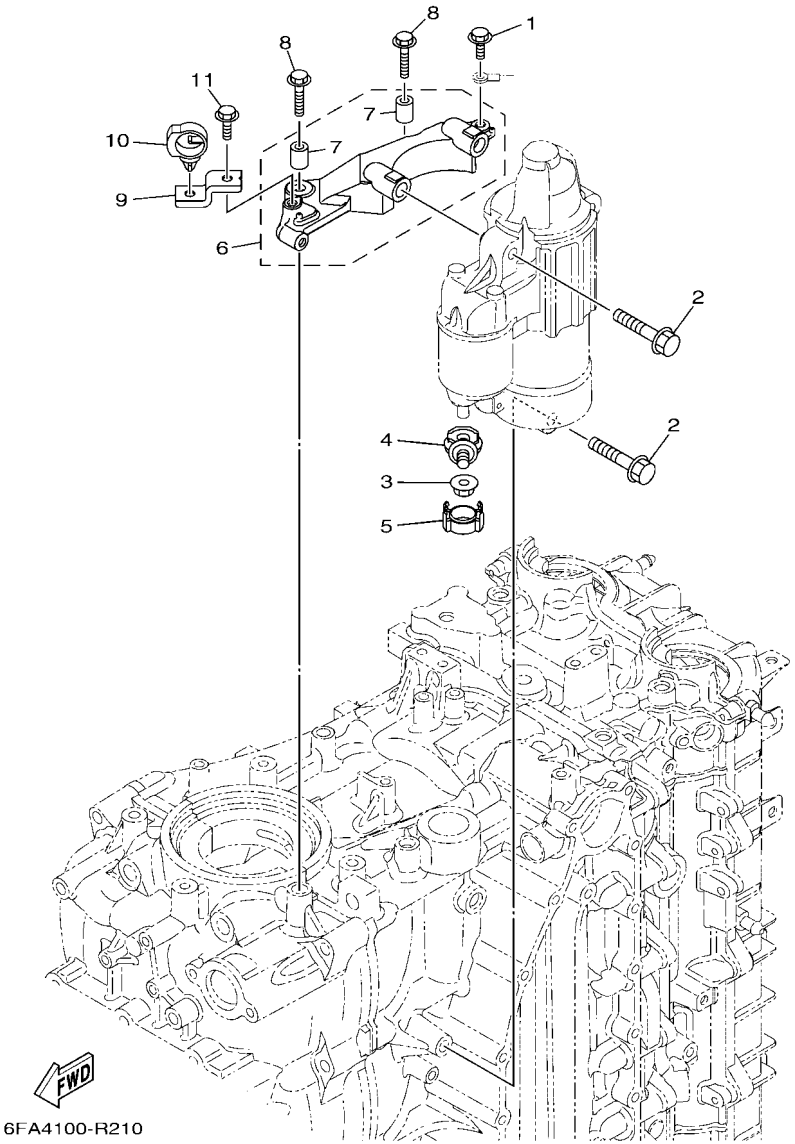

FIG. 21 ELECTRICAL 5

REF. NO.	PART NO.	DESCRIPTION	XCA	XCA2	LCA	LCA2		REMARKS
1	97E95–06516	BOLT, HEXAGON W/W DEEP RECESS	1	1	1	1		
2	97513–08545	BOLT, WITH WASHER	3	3	3	3		
3	90179–08003	NUT	1	1	1	1		
4	60V–81925–00	TERMINAL	1	1	1	1		
5	68F–82582–00	CAP,1	1	1	1	1		
6	6DA–81822–00	BRACKET, STARTING MOTOR	1	1	1	1		
7	99590–10114	.PIN, DOWEL	2	2	2	2		
8	90105–08M87	BOLT, FLANGE	2	2	2	2		
9	6DA–82388–00	PLATE	1	1	1	1		
10	90464–20181	CLAMP	1	1	1	1		
11	95D95–06016	BOLT, FLANGE DEEP RECESS	1	1	1	1		

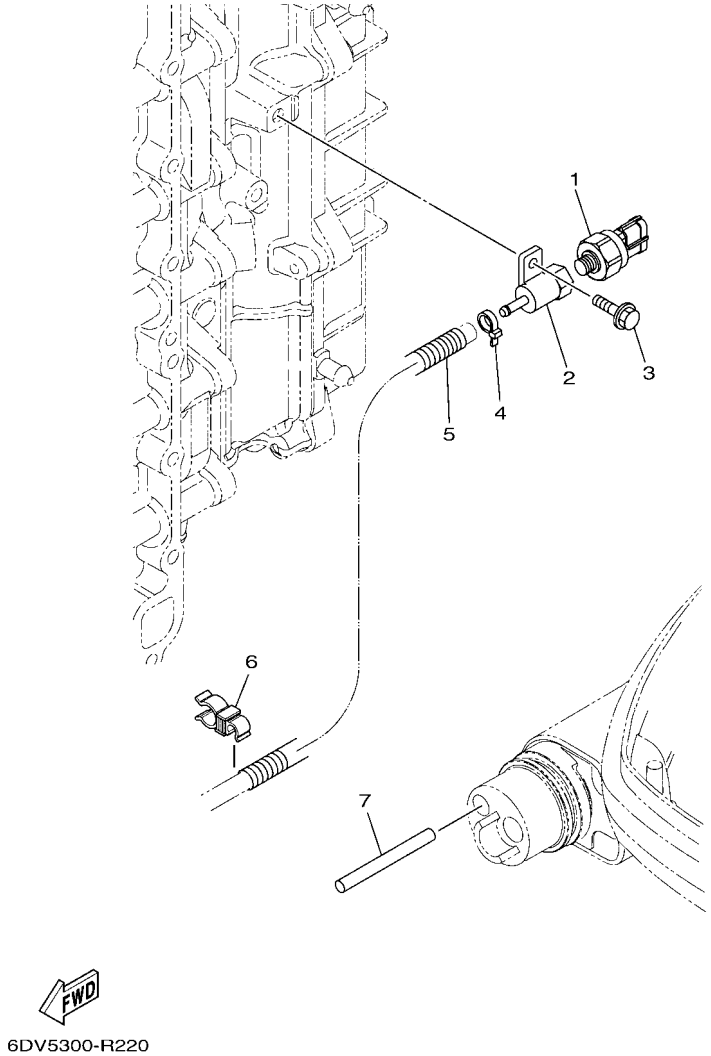

FIG. 22 ELECTRICAL 6

REF. NO.	PART NO.	DESCRIPTION	XCA	XCA2	LCA	LCA2		REMARKS
1	6AW–8366B–01	SENSOR, WATER PRESSURE	1	1	1	1		FOR LAN SPEED
2	60V–8366D–00	ADAPTOR, INPUT	1	1	1	1		FOR LAN SPEED
3	95D95–06016	BOLT, FLANGE DEEP RECESS	1	1	1	1		FOR LAN SPEED
4	90465–11M10	CLAMP	1	1	1	1		FOR LAN SPEED
5	90447–07008	HOSE, WITH SPRING (L200)	1	1	1	1		FOR LAN SPEED
6	90464–13013	CLAMP	1	1	1	1		FOR LAN SPEED
7	60V–42629–01	SEAL			1	1		L(20.3")-FOR LAN SPEED

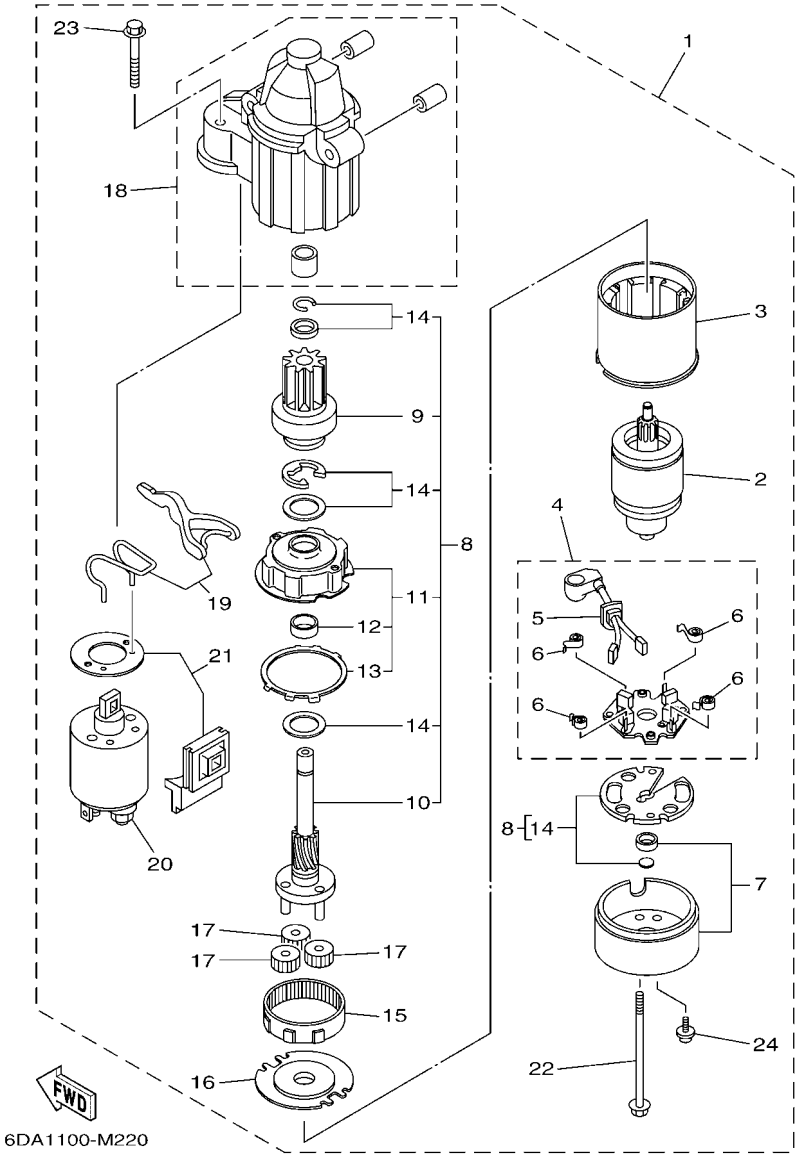

FIG. 23 STARTING MOTOR

REF. NO.	PART NO.	DESCRIPTION	XCA	XCA2	LCA	LCA2		REMARKS
1	6CB–81800–01	STARTING MOTOR ASSY	1	1	1	1		
2	67F–81850–00	.ARMATURE ASSY	1	1	1	1		
3	67F–81810–00	.STATOR ASSY	1	1	1	1		
4	69J–81840–11	.BRUSH HOLDER ASSY	1	1	1	1		
5	69J–81801–11	..BRUSH SET	1	1	1	1		
6	67F–81813–00	..SPRING, BRUSH	4	4	4	4		
7	6CB–81820–00	.REAR BRACKET ASSY	1	1	1	1		
8	6CB–81807–00	.GEAR ASSY, STARTING MOTOR	1	1	1	1		
9	6CB–81832–00	..CLUTCH, OVER RUN	1	1	1	1		
10	6CB–81836–00	..SHAFT, PINION	1	1	1	1		
11	67F–81821–00	..BRACKET, CENTER 1	1	1	1	1		
12	67F–81841–00	...BEARING	1	1	1	1		
13	67F–8183R–00	...GASKET	1	1	1	1		
14	6CB–81809–00	..WASHER KIT	1	1	1	1		
15	67F–81891–00	.GEAR, RING	1	1	1	1		WITH 67F-8183R-00
16	67F–81830–00	.BRACKET, CENTER 2	1	1	1	1		
17	60V–8183T–00	.GEAR, IDLER	3	3	3	3		
18	6CB–81842–00	.COVER	1	1	1	1		
19	6C5–81839–00	.LEVER ASSY	1	1	1	1		
20	6C5–81941–00	.STARTER RELAY ASSY	1	1	1	1		
21	6C5–81869–00	.COVER, DUST	1	1	1	1		
22	6CB–81826–00	.BOLT	2	2	2	2		
23	69J–81828–00	.BOLT 2	2	2	2	2		
24	67F–81846–00	.SCREW	2	2	2	2		

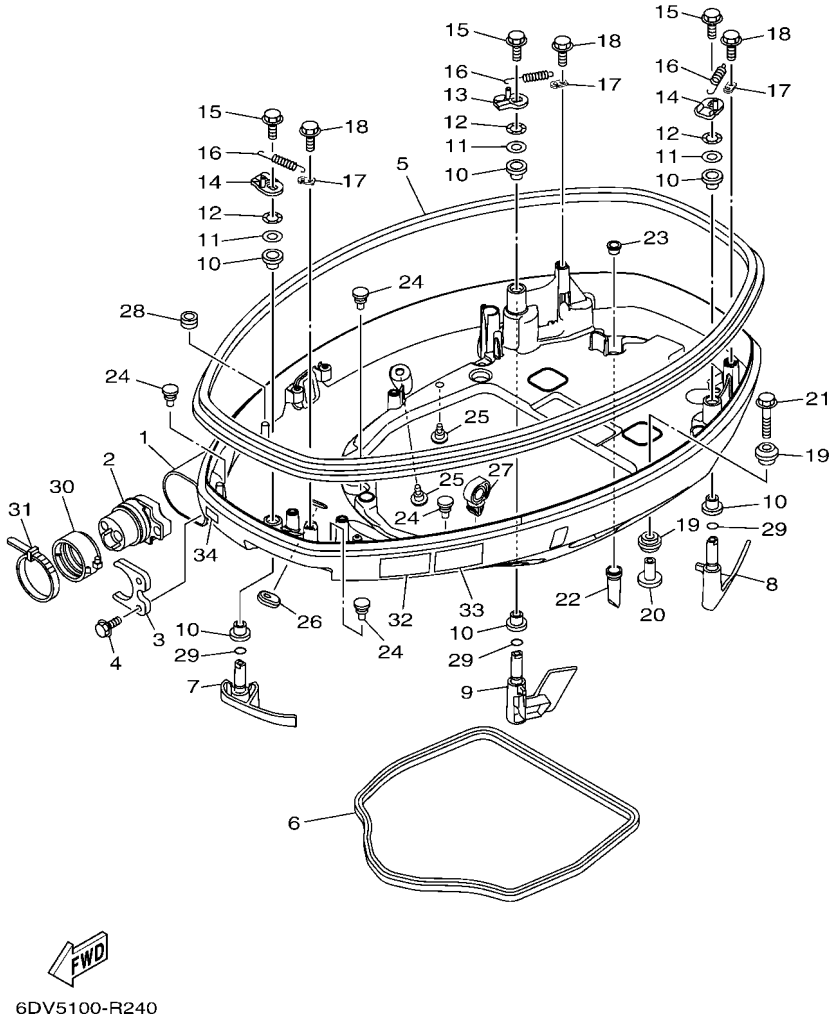

FIG. 24 BOTTOM COWLING 1

REF. NO.	PART NO.	DESCRIPTION	XCA	XCA2	LCA	LCA2		REMARKS
1	6DA–42710–00–8D	BOTTOM COWLING ASSY	1		1			GRAY
	6DA–42710–00–CE	BOTTOM COWLING ASSY		1		1		WHITE
2	6CE–42725–03	GROMMET	1	1	1	1		
3	6CB–42761–00	STOPPER	1	1	1	1		
4	95D95–06014	BOLT, FLANGE DEEP RECESS	2	2	2	2		
5	6DA–42615–00	SEAL	1	1	1	1		
6	63P–42716–01	RUBBER SEAL 1	1	1	1	1		
7	6DA–42815–01–8D	LEVER, CLAMP 1	1		1			GRAY
	6DA–42815–01–CE	LEVER, CLAMP 1		1		1		WHITE
8	6DA–42816–02–8D	LEVER, CLAMP 2	1		1			GRAY
	6DA–42816–02–CE	LEVER, CLAMP 2		1		1		WHITE
9	6DA–42817–02–8D	LEVER, CLAMP 3	1		1			GRAY
	6DA–42817–02–CE	LEVER, CLAMP 3		1		1		WHITE
10	90386–15M73	BUSH	6	6	6	6		
11	90201–156J2	WASHER, PLATE	3	3	3	3		
12	90206–15M18	WASHER, WAVE	3	3	3	3		
13	6CB–42818–00	LEVER, CLAMP 4	1	1	1	1		
14	6CB–42819–00	LEVER, CLAMP 5	2	2	2	2		
15	95D95–08012	BOLT, FLANGE DEEP RECESS	3	3	3	3		
16	90506–22001	SPRING, TENSION	3	3	3	3		
17	66T–43144–00	HOOK, SPRING	3	3	3	3		
18	95D95–06012	BOLT, FLANGE DEEP RECESS	3	3	3	3		
19	90480–22M81	GROMMET	8	8	8	8		
20	90387–08M37	COLLAR	4	4	4	4		
21	90119–08187	BOLT, WITH WASHER	4	4	4	4		
22	6DA–42717–01	RUBBER, SEAL 2	4	4	4	4		
23	6DA–42384–00	SEAL, CAP	4	4	4	4		

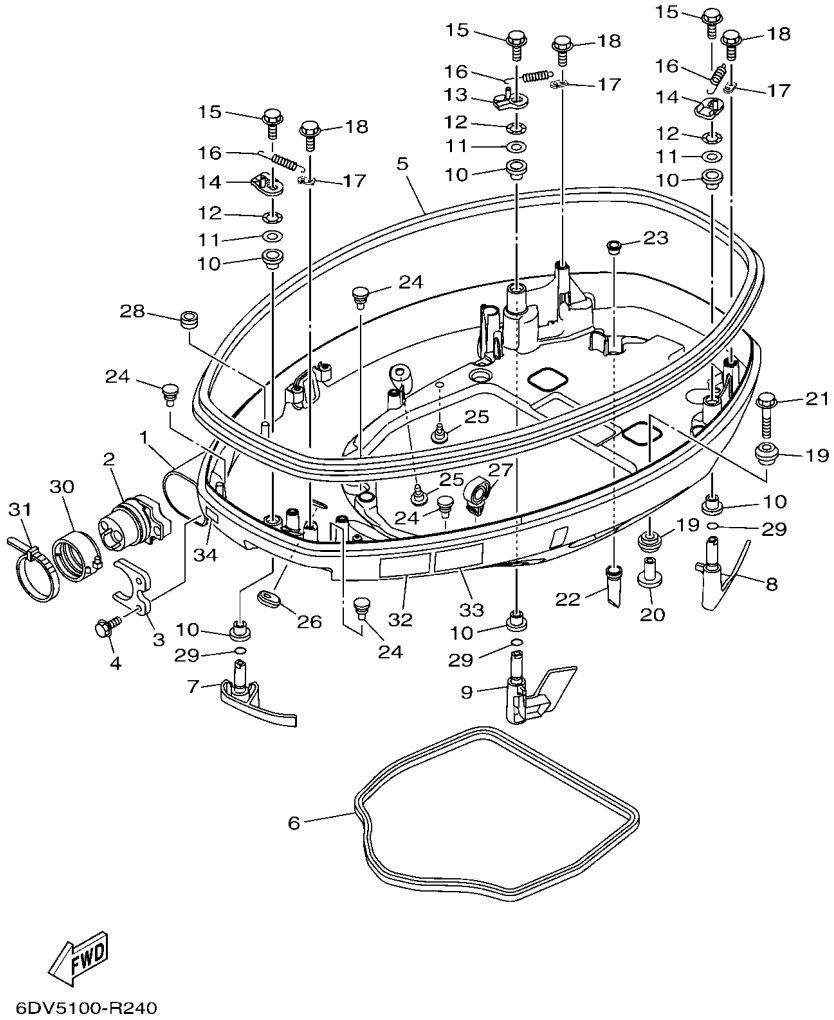

FIG. 24 BOTTOM COWLING 1

REF. NO.	PART NO.	DESCRIPTION	XCA	XCA2	LCA	LCA2		REMARKS
24	6H4–42748–01	GROMMET	4	4	4	4		
25	6P2–44391–00	NIPPLE, HOSE	2	2	2	2		
26	61A–42727–01	GROMMET	1	1	1	1		
27	90464–13249	CLAMP	1	1	1	1		
28	90480–13163	GROMMET	1	1	1	1		
29	93210–13M63	O-RING	3	3	3	3		
30	68F–42753–00	FASTNER	1	1	1	1		AP
31	90464–20258	CLAMP	1	1	1	1		AP
32	6EE–42794–40	LABEL, WARNING (GENERAL)	1	1	1	1		
33	6EE–42794–50	LABEL, WARNING (GENERAL)	1	1	1	1		
34	6AH–81996–00	MARK	1	1	1	1		

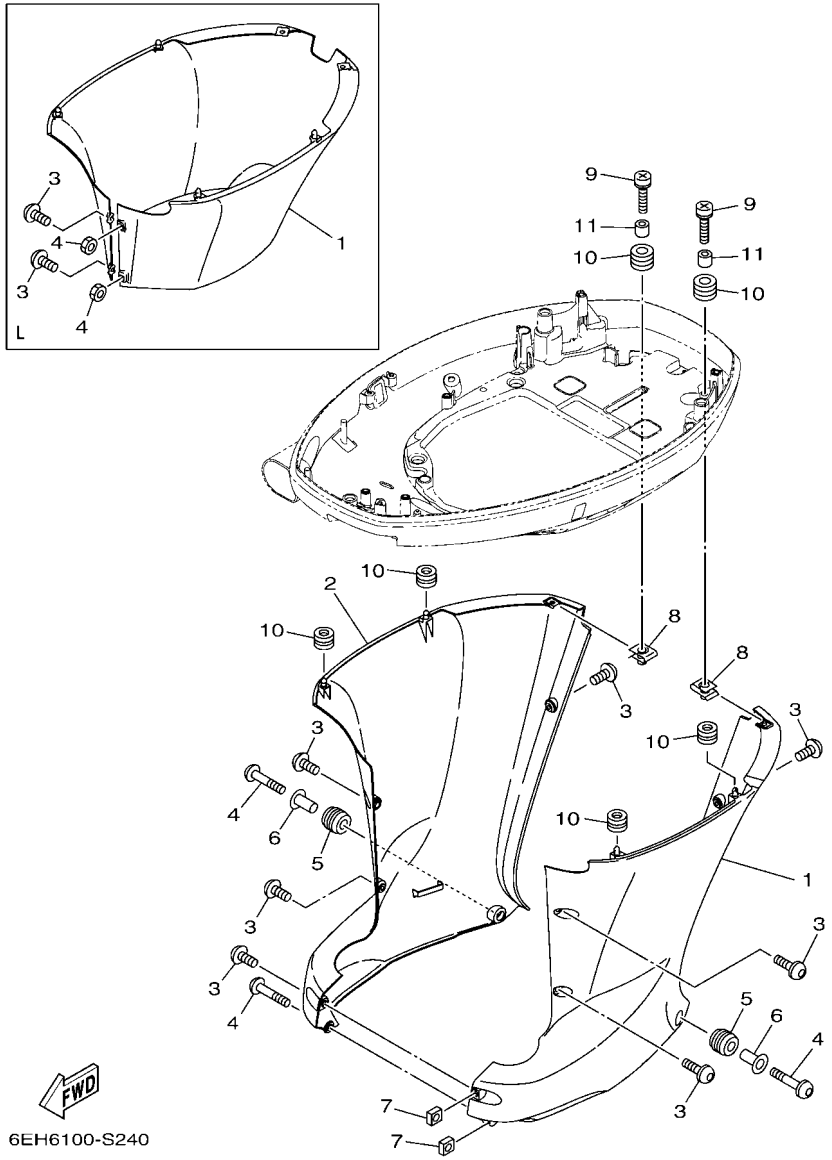

FIG. 25 BOTTOM COWLING 2

REF. NO.	PART NO.	DESCRIPTION	XCA	XCA2	LCA	LCA2		REMARKS
1	6DA–42740–01	APRON COMPLETE 1	1					GRAY X(25.3")
	6DA–42740–01–CE	APRON COMPLETE 1		1				WHITE X(25.3")
	6DA–42741–11–8D	APRON			1			GRAY L(20.3")
	6DA–42741–11–CE	APRON				1		WHITE L(20.3")
2	6DA–42770–01	APRON COMPLETE 2	1					GRAY X(25.3")
	6DA–42770–01–CE	APRON COMPLETE 2		1				WHITE X(25.3")
3	90111–06144	BOLT,HEX. SOCKET BUTTON	7	7				X(25.3")
	90159–06M28	SCREW, WITH WASHER			2	2		L(20.3")
4	90111–06142	BOLT,HEX. SOCKET BUTTON	3	3				X(25.3")
	95380–06600	NUT, HEXAGON			2	2		L(20.3")
5	90480–16009	GROMMET	2	2				X(25.3")
6	90387–07028	COLLAR	2	2				X(25.3")
7	90173–06001	NUT, SQUARE	2	2				X(25.3")
8	90183–061A8	NUT, SPRING	2	2	2	2		
9	90159–06053	SCREW, WITH WASHER	2	2	2	2		
10	90480–13M24	GROMMET	6	6	6	6		
11	90387–06M43	COLLAR	2	2	2	2		

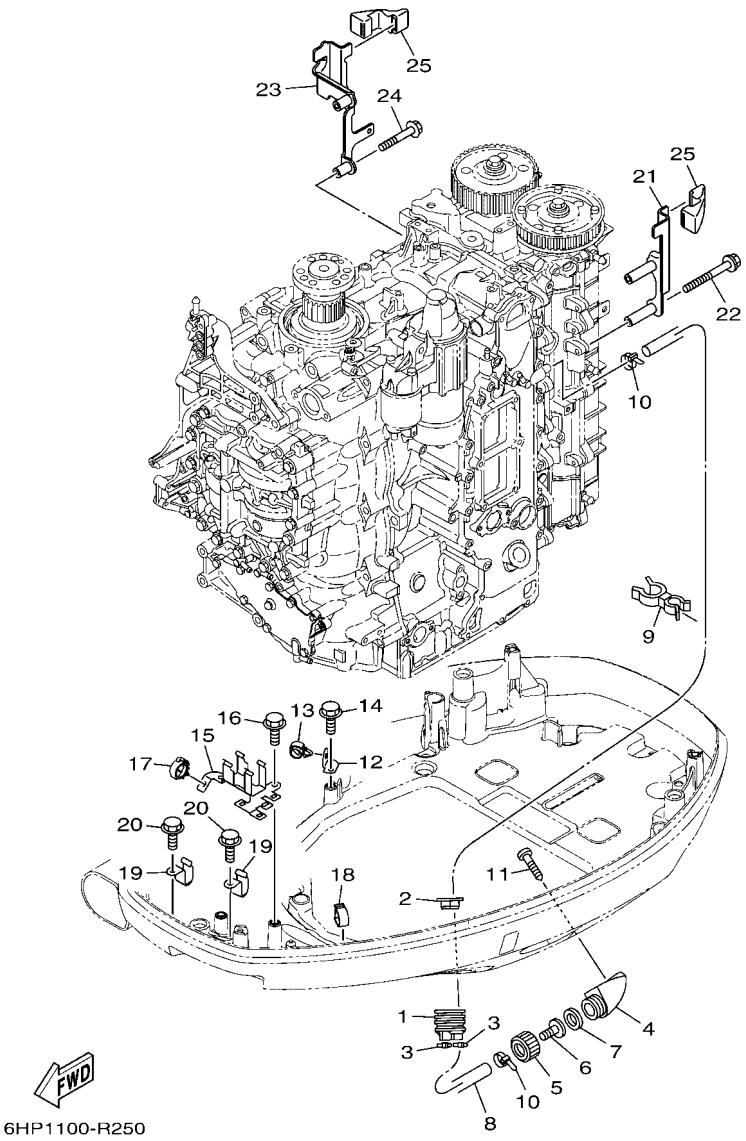

FIG. 26 BOTTOM COWLING 3

REF. NO.	PART NO.	DESCRIPTION	XCA	XCA2	LCA	LCA2		REMARKS
1	6H1–42726–22	GROMMET	1	1	1	1		
2	6BG–42384–00	SEAL, CAP	1	1	1	1		
3	90465–11M10	CLAMP	2	2	2	2		
4	6AW–12572–00	ADAPTER	1	1	1	1		
5	6R3–12581–00	JOINT, HOSE 1	1	1	1	1		
6	6AW–12582–00	JOINT, HOSE 2	1	1	1	1		
7	6R3–12583–00	GASKET, HOSE JOINT	1	1	1	1		
8	6DA–42541–00	PIPE 1	1	1	1	1		
9	90464–21256	CLAMP	1	1	1	1		
10	90465–11M10	CLAMP	2	2	2	2		
11	97780–60520	SCREW, TAPPING	2	2	2	2		
12	63P–42756–00	STAY, CLAMP	1	1	1	1		
13	90464–13249	CLAMP	1	1	1	1		
14	95D95–06012	BOLT, FLANGE DEEP RECESS	1	1	1	1		
15	6DV–8366G–00	BRACKET 3	1	1	1	1		
16	95D95–06012	BOLT, FLANGE DEEP RECESS	2	2	2	2		
17	90464–18246	CLAMP	1	1	1	1		
18	90464–18004	CLAMP	1	1	1	1		
19	90462–12013	CLAMP	2	2	2	2		
20	95D95–06012	BOLT, FLANGE DEEP RECESS	2	2	2	2		
21	6DA–11998–00	BRACKET 1	1	1	1	1		
22	95D95–06065	BOLT, FLANGE DEEP RECESS	2	2	2	2		
23	6DA–11999–00	BRACKET 2	1	1	1	1		
24	95D95–06040	BOLT, FLANGE DEEP RECESS	2	2	2	2		
25	6CB–42662–02	DAMPER	2	2	2	2		

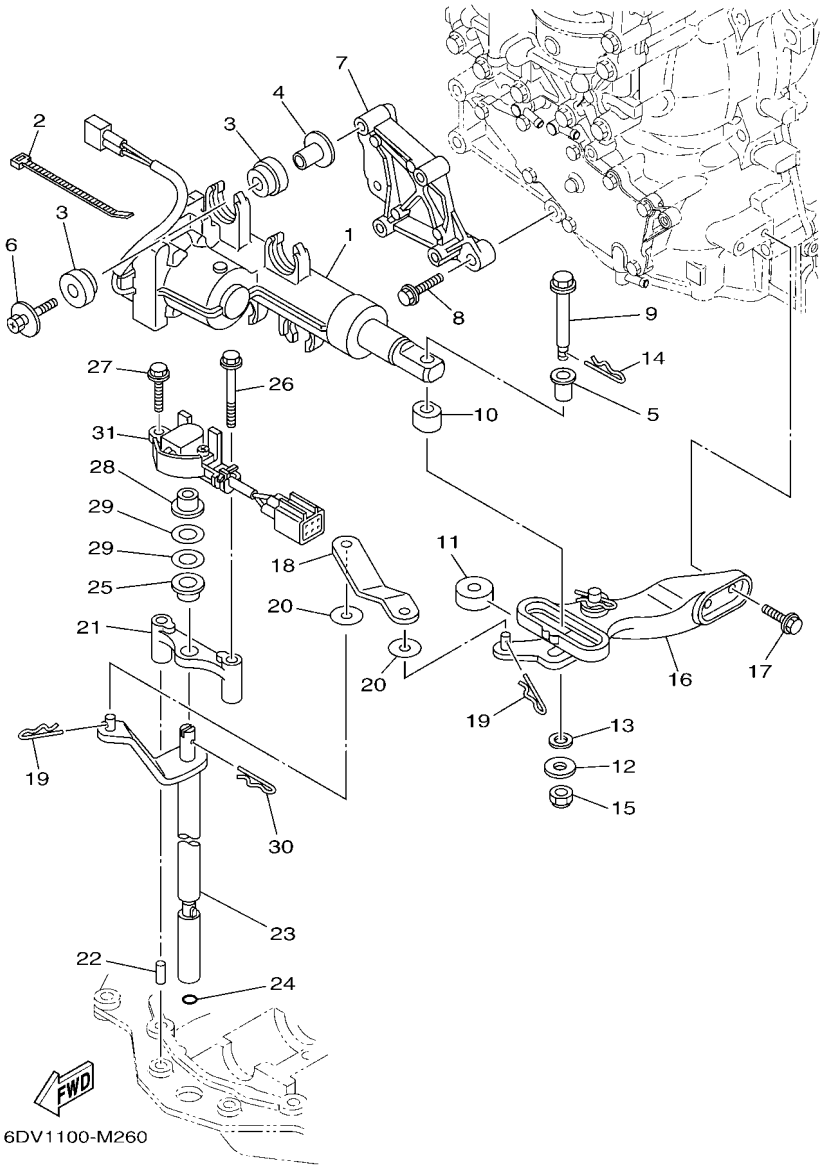

FIG. 27 CONTROL

REF. NO.	PART NO.	DESCRIPTION	XCA	XCA2	LCA	LCA2		REMARKS
1	6DV–4820A–01	ACTUATOR UNIT	1	1	1	1		
2	90465–11M10	CLAMP	1	1	1	1		
3	6DV–85564–00	GROMMET	8	8	8	8		
4	90387–06176	COLLAR	4	4	4	4		
5	90386–08008	BUSH	1	1	1	1		
6	68F–85119–00	BOLT	4	4	4	4		
7	6DV–44142–00	JOINT	1	1	1	1		
8	95D75–08030	BOLT, FLANGE DEEP RECESS	3	3	3	3		
9	6DV–42195–00	PIN, JOINT 1	1	1	1	1		
10	6DV–44122–00	BUSHING, SHIFT ROD LEVER	1	1	1	1		
11	6DV–44132–00	BUSHING	1	1	1	1		
12	90201–06068	WASHER, PLATE	1	1	1	1		
13	90202–08M41	WASHER, PLATE	1	1	1	1		
14	90468–18008	CLIP	1	1	1	1		
15	90185–06M07	NUT, SELF-LOCKING	1	1	1	1		
16	6DV–44100–00	SHIFT LINK ASSY	1	1	1	1		
17	97E75–06520	BOLT, HEXAGON W/W DEEP RECESS	2	2	2	2		
18	6DV–44121–00	LEVER, SHIFT ROD	1	1	1	1		
19	90468–18008	CLIP	2	2	2	2		
20	90202–06015	WASHER, PLATE	2	2	2	2		
21	6DV–44118–00	BRACKET	1	1	1	1		
22	93604–09066	PIN, DOWEL	1	1	1	1		
23	6DV–44120–02	HANDLE GEAR SHIFT ASSY	1	1				X(25.3")
	6DV–44120–11	HANDLE GEAR SHIFT ASSY			1	1		L(20.3")
24	93210–09165	O-RING	1	1	1	1		
25	90386–10001	BUSH	1	1	1	1		
26	97E95–06550	BOLT, HEXAGON W/W DEEP RECESS	1	1	1	1		

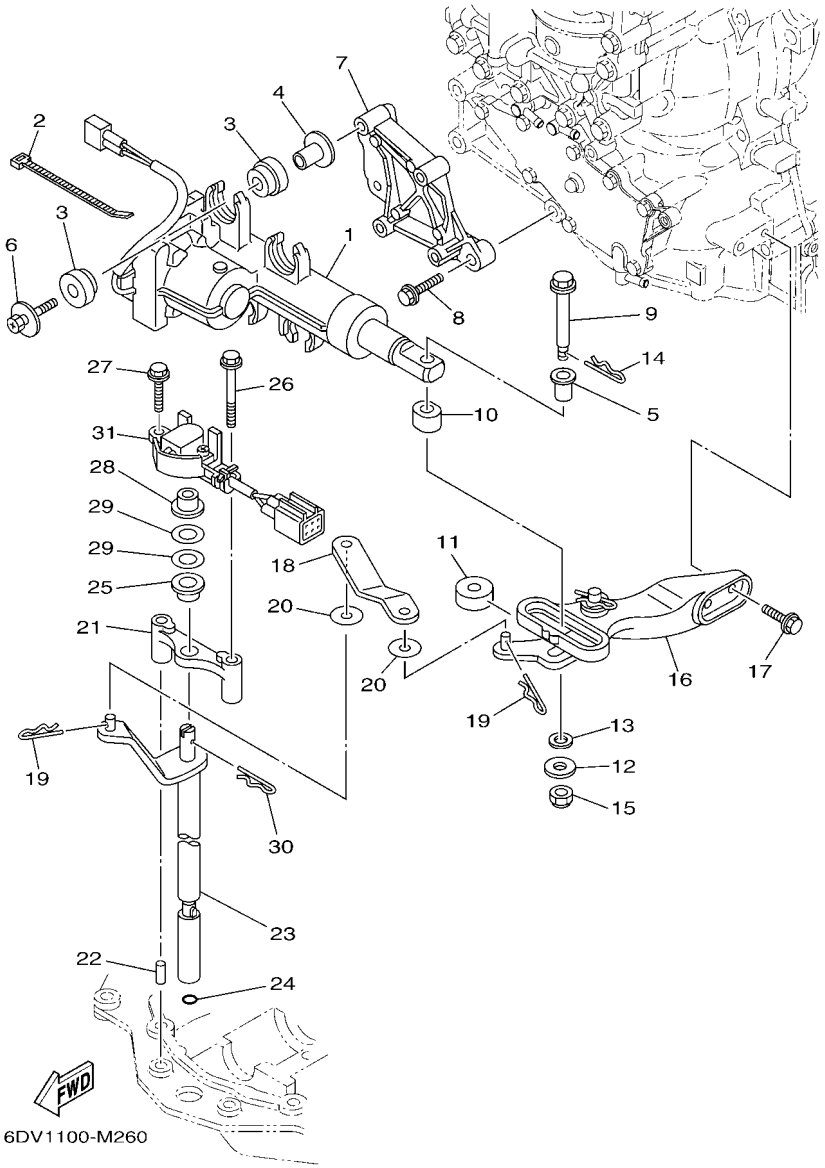

FIG. 27 CONTROL

REF. NO.	PART NO.	DESCRIPTION	XCA	XCA2	LCA	LCA2		REMARKS
27	97E75–06520	BOLT, HEXAGON W/W DEEP RECESS	1	1	1	1		
28	90386–10001	BUSH	1	1	1	1		
29	90201–11008	WASHER, PLATE	2	2	2	2		
30	90468–180A0	CLIP	1	1	1	1		
31	6DV–68303–00	SENSOR ASSY	1	1	1	1		

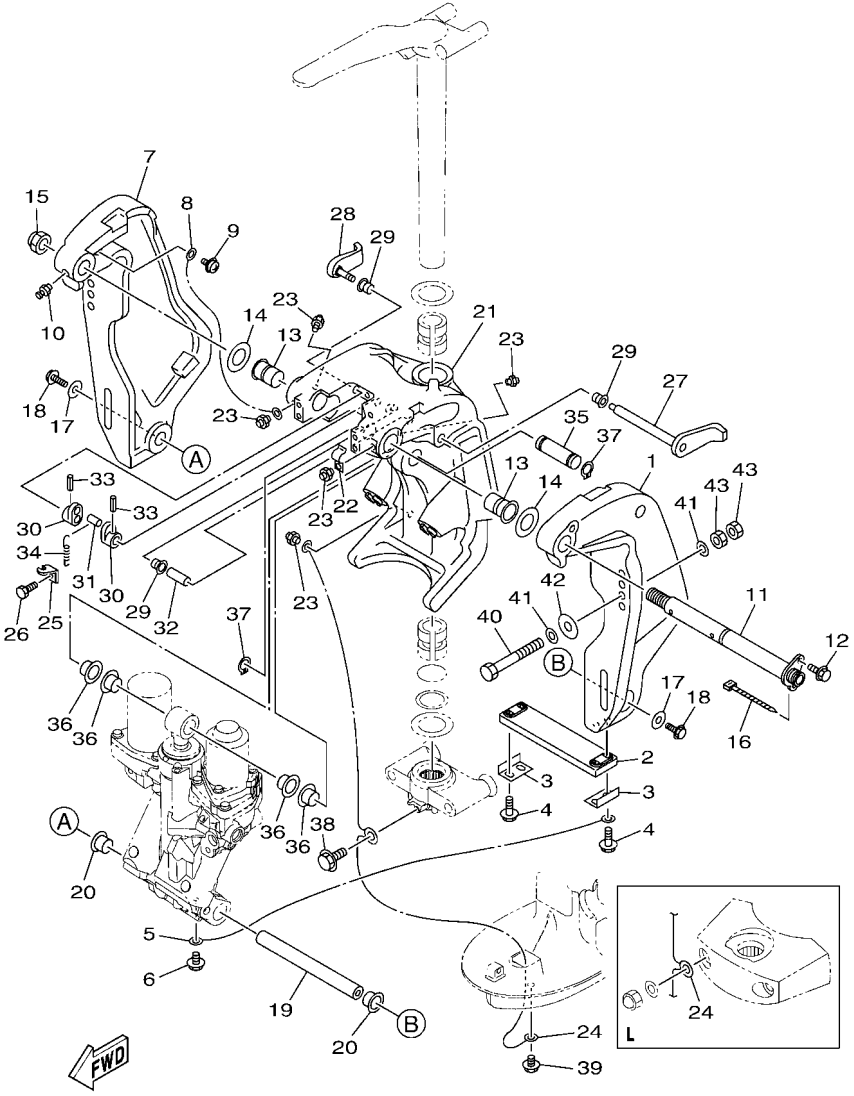

FIG. 28 BRACKET 1

REF. NO.	PART NO.	DESCRIPTION	XCA	XCA2	LCA	LCA2		REMARKS
1	64E–43111–02–8D	BRACKET, CLAMP 1	1		1			GRAY
	64E–43111–02–CE	BRACKET, CLAMP 1		1		1		WHITE
2	6AW–45251–00	ANODE	1	1	1	1		
3	6G5–44526–00	PLATE	2	2	2	2		
4	97E95–06530	BOLT, HEXAGON W/W DEEP RECESS	4	4	4	4		
5	6E5–82148–00	WIRE, LEAD 4	1	1	1	1		
6	97E95–06510	BOLT, HEXAGON W/W DEEP RECESS	1	1	1	1		
7	64E–43112–02–8D	BRACKET, CLAMP 2	1		1			GRAY
	64E–43112–02–CE	BRACKET, CLAMP 2		1		1		WHITE
8	6E5–82148–00	WIRE, LEAD 4	1	1	1	1		
9	97985–06212	SCREW, WITH WASHER	1	1	1	1		
10	93700–06002	NIPPLE, GREASE	1	1	1	1		
11	64E–43131–30	BOLT, CLAMP BRACKET	1	1	1	1		
12	97E95–08520	BOLT, HEXAGON W/W DEEP RECESS	1	1	1	1		
13	90386–25M31	BUSH	2	2	2	2		
14	90201–26M59	WASHER, PLATE	2	2	2	2		
15	90185–22M11	NUT, SELF-LOCKING	1	1	1	1		
16	90465–11M10	CLAMP	1	1	1	1		
17	90201–10060	WASHER, PLATE	2	2	2	2		
18	90119–10054	BOLT, WITH WASHER	2	2	2	2		
19	6BC–43818–00	PIN, LOWER SHOCK MOUNT	1	1	1	1		
20	90386–22M98	BUSH	2	2	2	2		
21	64E–43311–20–8D	BRACKET, SWIVEL 1	1					GRAY X(25.3")
	64E–43311–20–CE	BRACKET, SWIVEL 1		1				WHITE X(25.3")
	64E–43311–10–8D	BRACKET, SWIVEL 1			1			GRAY L(20.3")
	64E–43311–10–CE	BRACKET, SWIVEL 1				1		WHITE L(20.3")
22	90465–08M63	CLAMP	1	1	1	1		

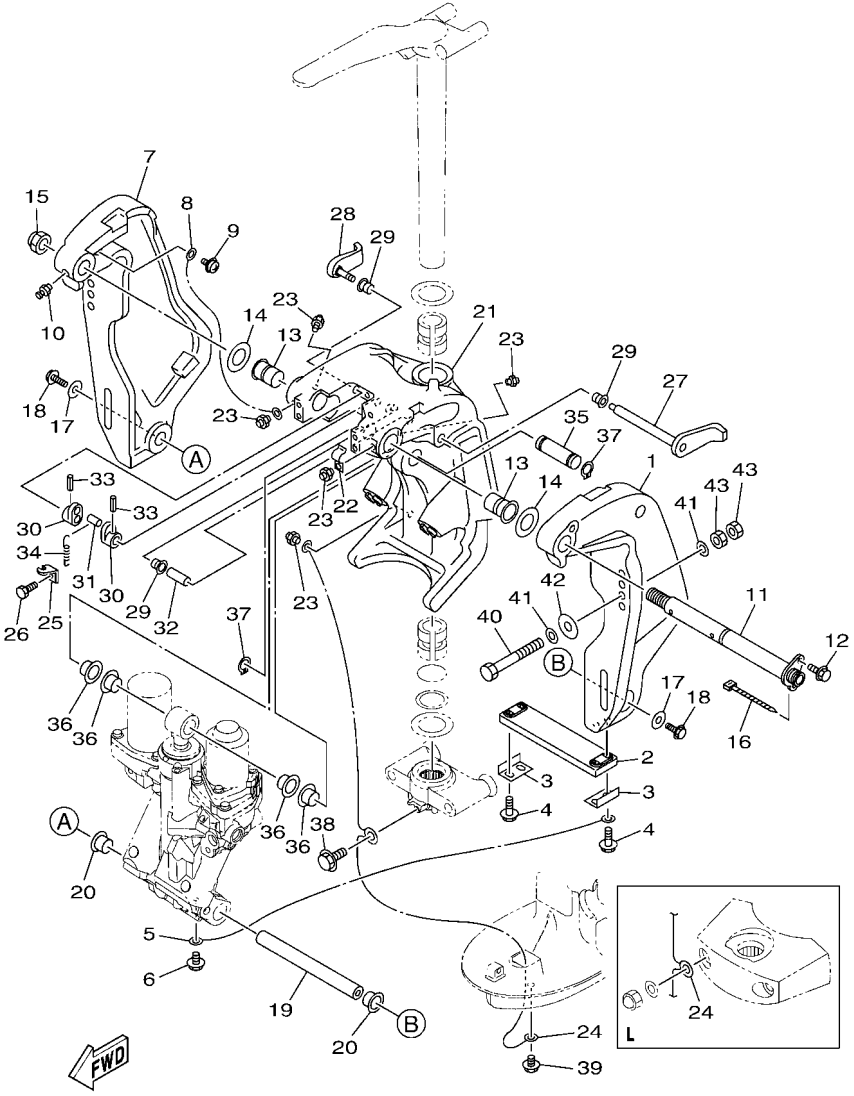

FIG. 28 BRACKET 1

REF. NO.	PART NO.	DESCRIPTION	XCA	XCA2	LCA	LCA2		REMARKS
23	93700–06002	NIPPLE, GREASE	5	5	5	5		
24	6DA–82149–00	WIRE, LEAD 3	1	1				X(25.3")
	66K–82149–00	WIRE, LEAD 3			1	1		L(20.3")
25	6G5–43144–00	HOOK, SPRING	1	1	1	1		
26	97D95–06010	BOLT, HEXAGON DEEP RECESS	1	1	1	1		
27	6G5–43181–02	LEVER, TILT STOP 1	1	1	1	1		
28	6G5–43185–02	LEVER, TILT STOP 2	1	1	1	1		
29	90386–10M16	BUSH	3	3	3	3		
30	6G5–43148–00	COLLAR, DISTANCE	2	2	2	2		
31	90249–06M19	PIN	1	1	1	1		
32	90387–10M05	COLLAR	1	1	1	1		
33	91690–30020	PIN, SPRING	2	2	2	2		
34	90506–16003	SPRING, TENSION	1	1	1	1		
35	64E–43126–10	PIN, UPPER SHOCK MOUNT	1	1	1	1		
36	90386–22M98	BUSH	4	4	4	4		
37	93410–22M11	CIRCLIP	2	2	2	2		
38	95D95–06010	BOLT, FLANGE DEEP RECESS	1	1				X(25.3")
39	95D95–06010	BOLT, FLANGE DEEP RECESS	1	1	1	1		
40	90101–12065	BOLT (L:130MM)	2	2				UR X(25.3")
	90101–12065	BOLT (L:130MM)			4	4		UR L(20.3")
	90101–12066	BOLT (L:150MM)	2	2	2	2		UR
41	90201–13M01	WASHER, PLATE	8	8	8	8		
42	90201–12426	WASHER, PLATE	4	4	4	4		
43	95380–12600	NUT	8	8	8	8		

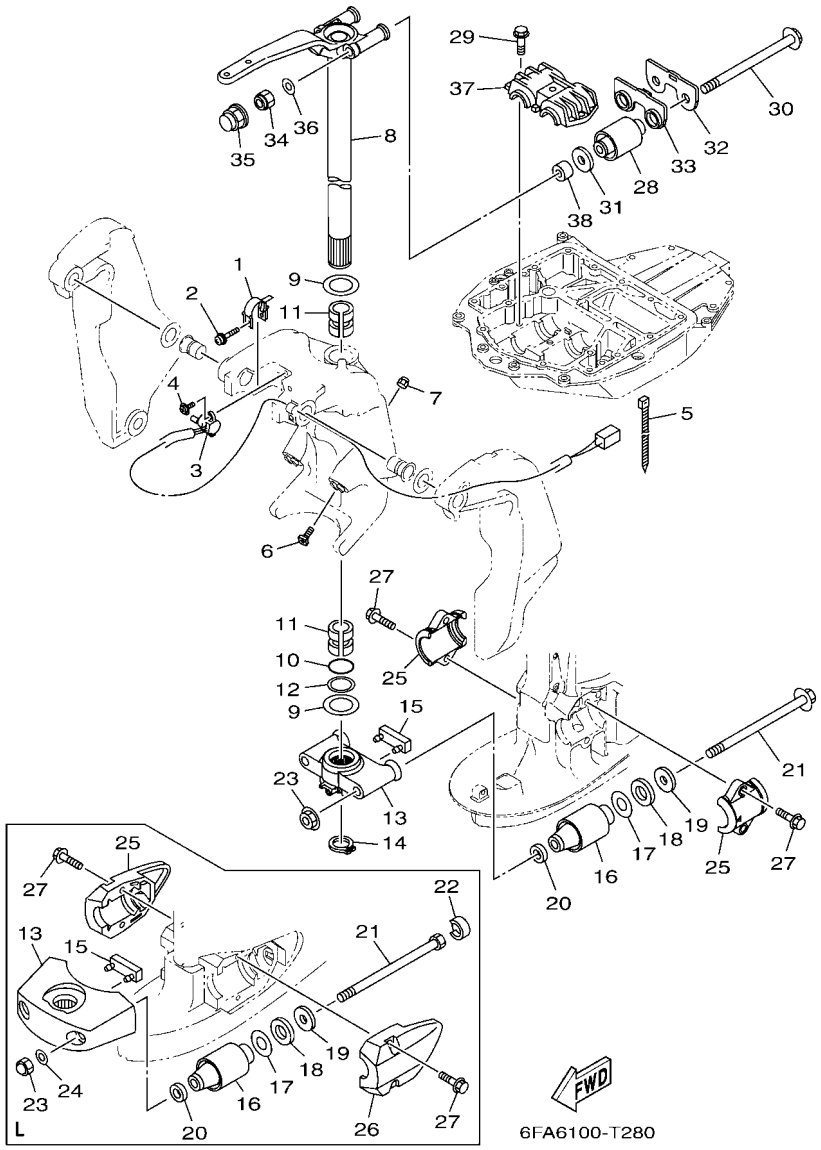

FIG. 29 BRACKET 2

REF. NO.	PART NO.	DESCRIPTION	XCA	XCA2	LCA	LCA2		REMARKS
1	64E–43139–11	CAM, TRIM SENDER	1	1	1	1		
2	90159–05059	SCREW, WITH WASHER	1	1	1	1		
3	67H–83672–02	TRIM SENDER	1	1	1	1		
4	97985–06216	SCREW, WITH WASHER	2	2	2	2		
5	90465–11M10	CLAMP	3	3	3	3		
6	61A–43376–00	BOLT, THRUST RECEIVER	2	2	2	2		
7	95780–10300	NUT, FLANGE	2	2	2	2		
8	6DA–42510–00–8D	STEERING BRACKET ASSY	1					GRAY X(25.3")
	6DA–42510–00–CE	STEERING BRACKET ASSY		1				WHITE X(25.3")
	6DA–42510–10–8D	STEERING BRACKET ASSY			1			GRAY L(20.3")
	6DA–42510–10–CE	STEERING BRACKET ASSY				1		WHITE L(20.3")
9	90201–38M60	WASHER, PLATE	2	2	2	2		
10	93210–37MH7	O-RING	1	1	1	1		
11	90386–38M32	BUSH	2	2	2	2		
12	90202–40M47	WASHER, PLATE	1	1	1	1		
13	6DA–44551–00–CA	HOUSING, LOWER MOUNT RUBBER 1	1	1				GRAY X(25.3")
	68V–44551–00–8D	HOUSING, LOWER MOUNT RUBBER 1			1			GRAY L(20.3")
	68V–44551–00–CE	HOUSING, LOWER MOUNT RUBBER 1				1		WHITE L(20.3")
14	93410–37M04	CIRCLIP	1	1	1	1		
15	6DA–44575–00	DAMPER, LOWER MOUNT RUBBER	1	1				X(25.3")
	61A–44575–01	DAMPER, LOWER MOUNT RUBBER			1	1		L(20.3")
16	63P–44555–00	MOUNT DAMPER, LOWER SIDE	2	2				X(25.3")
	60V–44555–00	MOUNT DAMPER, LOWER SIDE			2	2		L(20.3")
17	90201–35008	WASHER, PLATE	2	2	2	2		
18	90202–32M19	WASHER, PLATE	2	2	2	2		
19	90201–16M55	WASHER, PLATE	2	2	2	2		
20	90201–15M58	WASHER, PLATE	2	2	2	2		

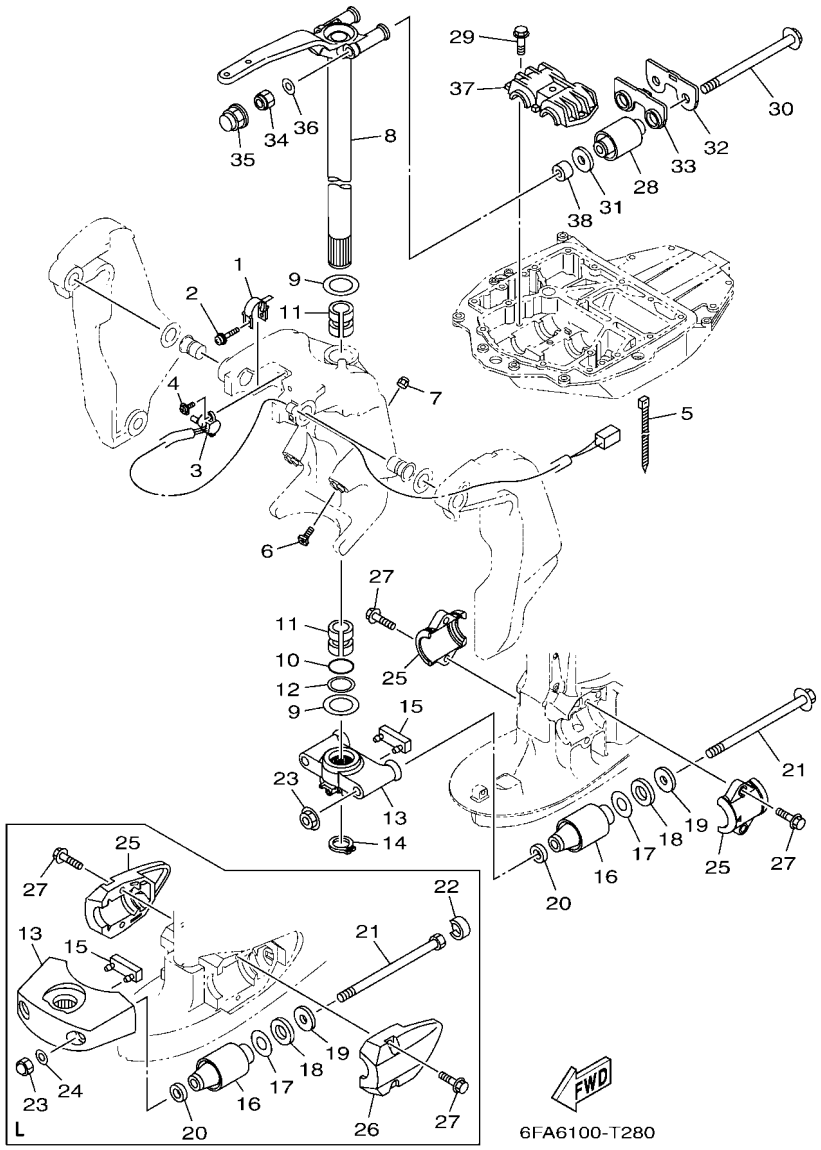

FIG. 29 BRACKET 2

REF. NO.	PART NO.	DESCRIPTION	XCA	XCA2	LCA	LCA2		REMARKS
21	90105–14012	BOLT, FLANGE	2	2				X(25.3")
	90101–14005	BOLT			2	2		L(20.3")
22	69J–44533–00	DAMPER, UPPER MOUNT RUBBER			2	2		L(20.3")
23	95604–14200	NUT, SELF-LOCKING	2	2				X(25.3")
	90176–14002	NUT, CROWN			2	2		L(20.3")
24	92995–14600	WASHER			2	2		L(20.3")
25	6DA–44552–00–CA	HOUSING, LOWER MOUNT RUBBER 2	2	2				GRAY X(25.3")
	63P–44553–00–8D	COVER, LOWER MOUNT			1			GRAY L(20.3")
	63P–44553–00–CE	COVER, LOWER MOUNT				1		WHITE L(20.3")
26	63P–44556–00–8D	COVER, LOWER MOUNT 2			1			GRAY L(20.3")
	63P–44556–00–CE	COVER, LOWER MOUNT 2				1		WHITE L(20.3")
27	90119–10058	BOLT, WITH WASHER	4	4	4	4		
28	6DA–44514–00	MOUNT DAMPER, UPPER SIDE	2	2	2	2		
29	90119–10024	BOLT, WITH WASHER	3	3	3	3		
30	90105–14009	BOLT, FLANGE	2	2	2	2		
31	90201–16M01	WASHER, PLATE	2	2	2	2		
32	6DA–44526–00	PLATE	1	1	1	1		
33	6DA–44532–00	STOPPER, UPPER MOUNT	1	1	1	1		
34	90185–14M00	NUT, SELF-LOCKING	2	2	2	2		
35	6DA–44194–00	CAP	2	2	2	2		
36	92995–14600	WASHER	2	2	2	2		
37	63P–44511–00	COVER, UPPER MOUNT	1	1	1	1		
38	90387–14004	COLLAR	2	2	2	2		

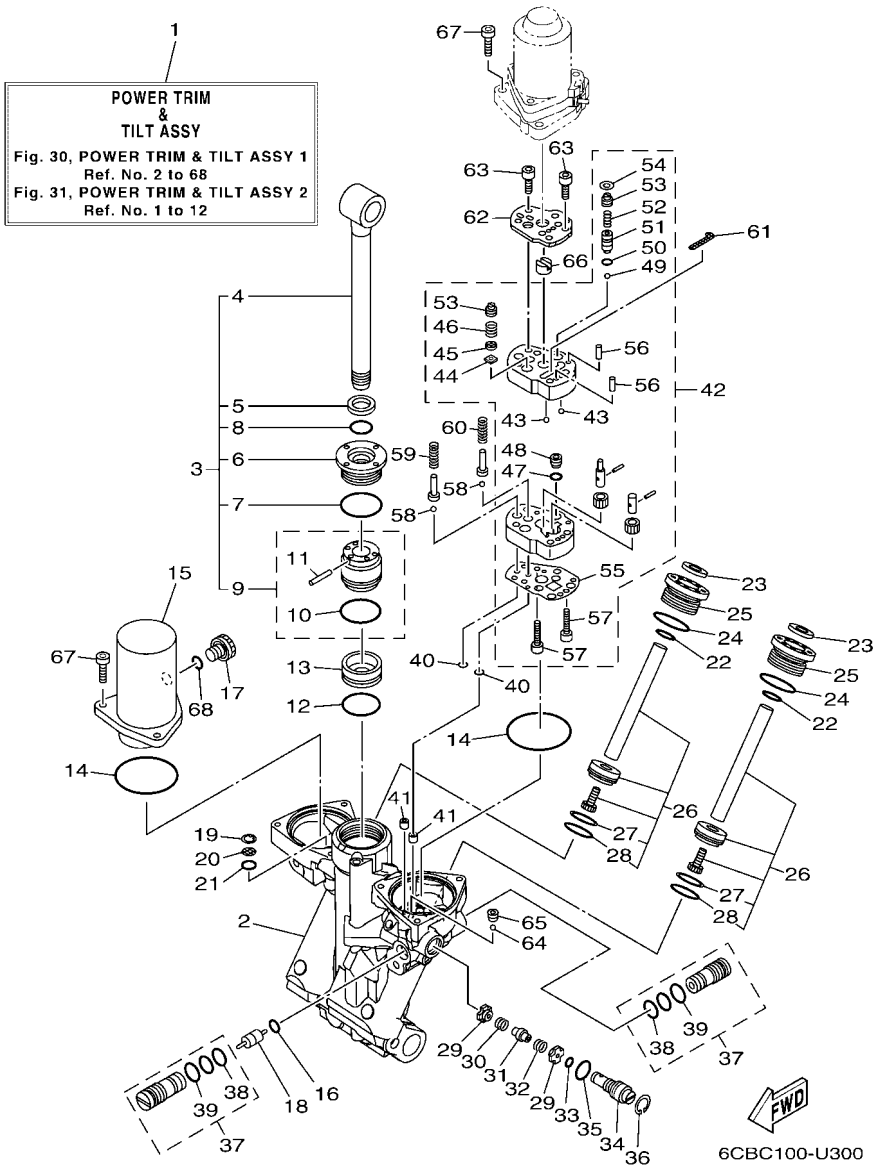

FIG. 30 POWER TRIM & TILT ASSY 1

REF. NO.	PART NO.	DESCRIPTION	XCA	XCA2	LCA	LCA2		REMARKS
1	63P–43800–21	POWER TRIM & TILT ASSY	1	1	1	1		
2	63P–4380L–21	HOUSING, TRIM & TILT SUB ASSY	1	1	1	1		
3	63P–43810–21	TILT PISTON SUB ASSY	1	1	1	1		
4	63P–43801–10	.ROD	1	1	1	1		
5	93106–19001	.OIL SEAL	1	1	1	1		
6	63P–43811–20	.SCREW, CYLINDER END	1	1	1	1		
7	63P–43861–20	.O-RING	1	1	1	1		
8	63P–43863–10	.O-RING	1	1	1	1		
9	63P–4380P–20	.PISTON SUB ASSY	1	1	1	1		
10	6H1–43862–00	..O-RING	1	1	1	1		
11	91609–16010	..PIN, SPRING	1	1	1	1		
12	6H1–43862–00	O-RING	1	1	1	1		
13	63P–43814–20	PISTON, FREE	1	1	1	1		
14	93210–68N50	O-RING	2	2	2	2		
15	63P–4382C–20	BODY, RESERVOIR 2	1	1	1	1		
16	93210–09165	O-RING	1	1	1	1		
17	6CJ–43829–10	PLUG, RESERVOIR	1	1	1	1		
18	6H1–43841–11	PISTON, SHUTTLE	1	1	1	1		
19	63P–43876–10	RING, SNAP	1	1	1	1		
20	63P–43816–10	FILTER 1	1	1	1	1		
21	93210–11N52	O-RING	1	1	1	1		
22	6D8–43863–00	O-RING	2	2	2	2		
23	63P–43812–20	SEAL, DUST	2	2	2	2		
24	63P–43862–10	O-RING	2	2	2	2		
25	63P–43821–21	SCREW, TRIM CYLINDER END	2	2	2	2		
26	63P–43820–20	TRIM PISTON SUB ASSY	2	2	2	2		
27	62X–43871–00	.RING, BACK UP	1	1	1	1		

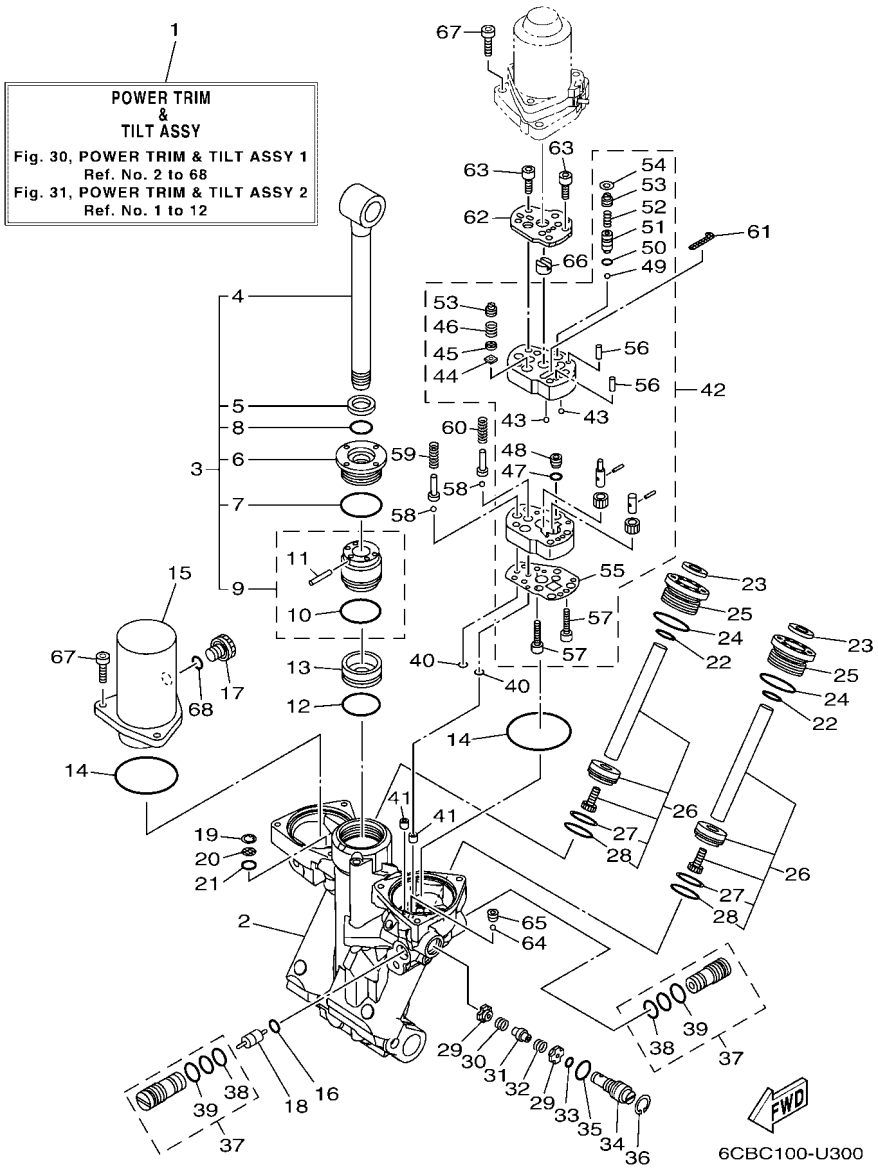

FIG. 30 POWER TRIM & TILT ASSY 1

REF. NO.	PART NO.	DESCRIPTION	XCA	XCA2	LCA	LCA2		REMARKS
28	93210–29375	.O-RING	1	1	1	1		
29	63P–43847–10	SEAT, MANUAL VALVE	2	2	2	2		
30	63P–43854–10	SPRING, MANUAL RELEASE	1	1	1	1		
31	63P–4382A–10	ADAPTOR 1	1	1	1	1		
32	63P–4384H–10	SPRING	1	1	1	1		
33	69J–4389J–00	O-RING	1	1	1	1		
34	63P–43845–20	SCREW, MANUAL RELEASE	1	1	1	1		
35	93210–12327	O-RING	1	1	1	1		
36	61A–43876–01	RING, SNAP	1	1	1	1		
37	63P–43802–20	VALVE SUB ASSY	2	2	2	2		
38	93210–12N52	.O-RING	1	1	1	1		
39	6H1–43866–01	.O-RING	1	1	1	1		
40	93210–064A5	O-RING	2	2	2	2		
41	63P–4381C–20	FILTER 3	2	2	2	2		
42	63P–43830–20	GEAR PUMP ASSY	1	1	1	1		
43	93503–16003	.BALL	2	2	2	2		
44	6H1–4384G–11	.SEAL, RELIEF VALVE	1	1	1	1		
45	6H1–43844–10	.PIN, VALVE SUPPORT	1	1	1	1		
46	6H1–43856–10	.SPRING, DOWN RELIEF	1	1	1	1		
47	93210–07N51	.O-RING	1	1	1	1		
48	63P–43851–20	.SEAT, RELIEF VALVE	1	1	1	1		
49	93501–08001	.BALL	1	1	1	1		
50	93210–064A5	.O-RING	1	1	1	1		
51	63P–43844–20	.PIN, VALVE SUPPORT	1	1	1	1		
52	69J–43855–00	.SPRING, UP RELIEF	1	1	1	1		
53	63P–43843–10	.SCREW, VALVE LOCK	2	2	2	2		
54	63P–43338–10	.WASHER, WAVE	1	1	1	1		

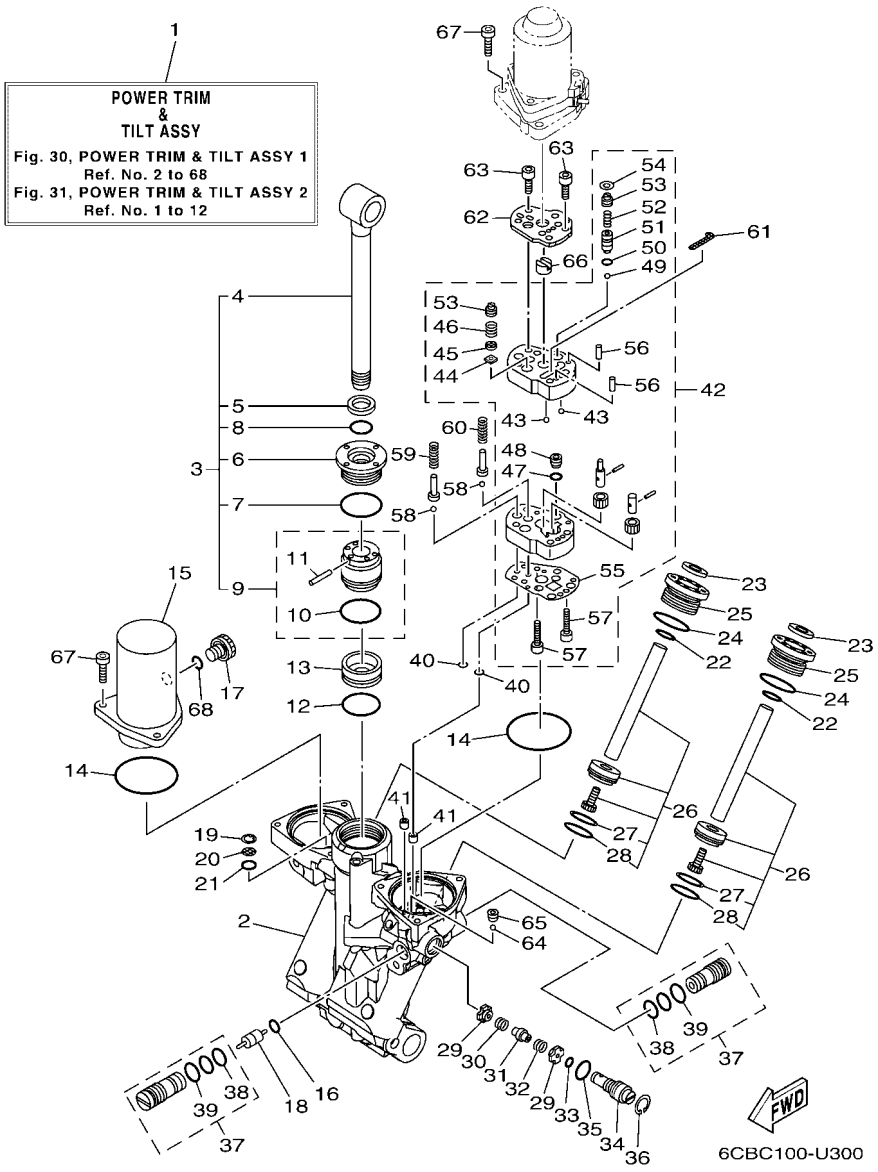

FIG. 30 POWER TRIM & TILT ASSY 1

REF. NO.	PART NO.	DESCRIPTION	XCA	XCA2	LCA	LCA2		REMARKS
55	63P–4384G–20	.SEAL, RELIEF VALVE	1	1	1	1		
56	93604–10011	.PIN, DOWEL	2	2	2	2		
57	91312–04020	.BOLT, HEXAGON SOCKET HEAD	2	2	2	2		
58	93501–08001	BALL	2	2	2	2		
59	63P–43857–10	SPRING, ABSORBER VALVE	1	1	1	1		
60	63P–4385H–10	SPRING, SEAL	1	1	1	1		
61	6CJ–43816–00	FILTER 1	1	1	1	1		
62	63P–4381J–10	PLATE	1	1	1	1		
63	91312–05035	BOLT, HEXAGON SOCKET HEAD	4	4	4	4		
64	93505–32038	BALL	1	1	1	1		
65	61A–43878–00	BOLT, SOCKET	1	1	1	1		
66	69J–43831–00	CONNECTOR, SHAFT	1	1	1	1		
67	91380–06025	BOLT	6	6	6	6		
68	6CJ–43861–10	O-RING	1	1	1	1		

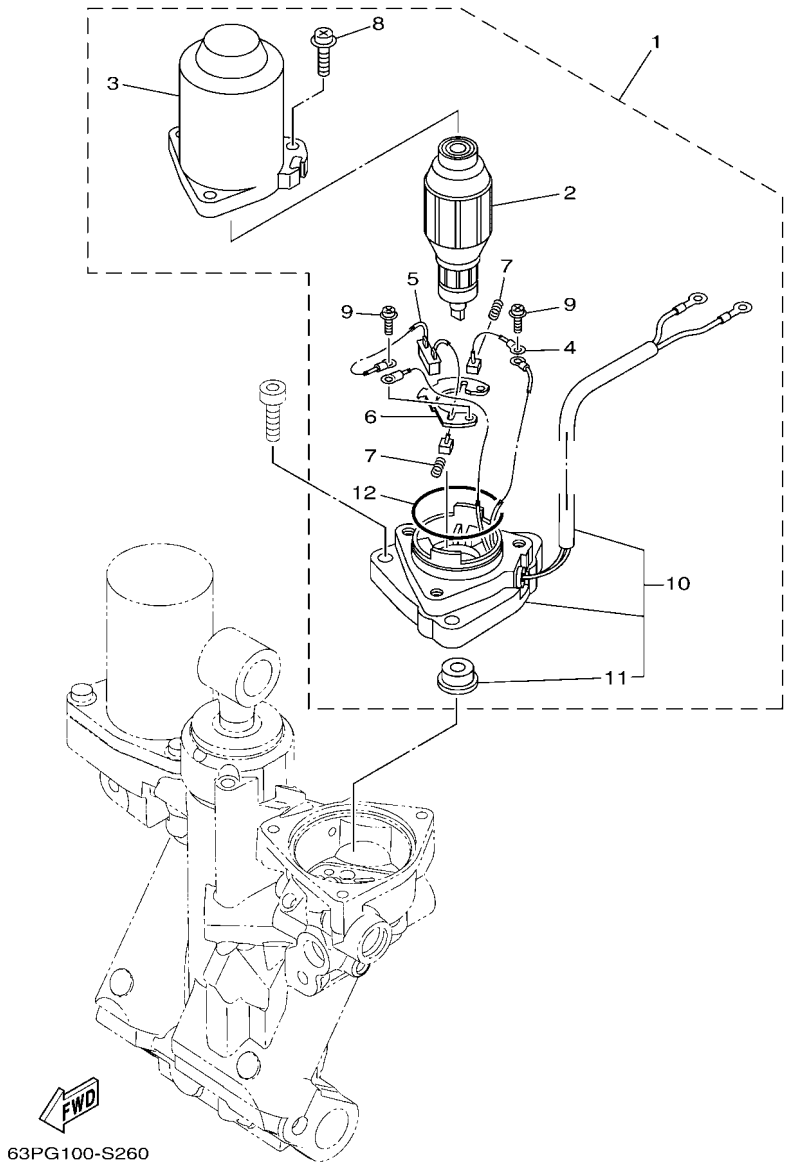

FIG. 31 POWER TRIM & TILT ASSY 2

REF. NO.	PART NO.	DESCRIPTION	XCA	XCA2	LCA	LCA2		REMARKS
1	63P–43880–22	MOTOR ASSY	1	1	1	1		
2	6EK–43805–01	.ARMATURE ASSY	1	1	1	1		
3	6EK–43804–11	.STATOR ASSY	1	1	1	1		
4	6EK–43892–00	.BRUSH 2	1	1	1	1		
5	63P–82181–20	.CIRCUIT BREAKER COMP.	1	1	1	1		
6	6EK–4380F–00	.PLATE, BRUSH HOLDER	1	1	1	1		
7	62X–4386K–00	.SPRING, BRUSH	2	2	2	2		
8	63P–43879–10	.SCREW, WITH WASHER	3	3	3	3		
9	97602–04316	.SCREW, PAN HEAD WITH WASHER	2	2	2	2		
10	63P–43881–21	.FRAME, END	1	1	1	1		
11	6EK–43882–00	..OIL SEAL	1	1	1	1		
12	6EK–43862–00	.O-RING	1	1	1	1		

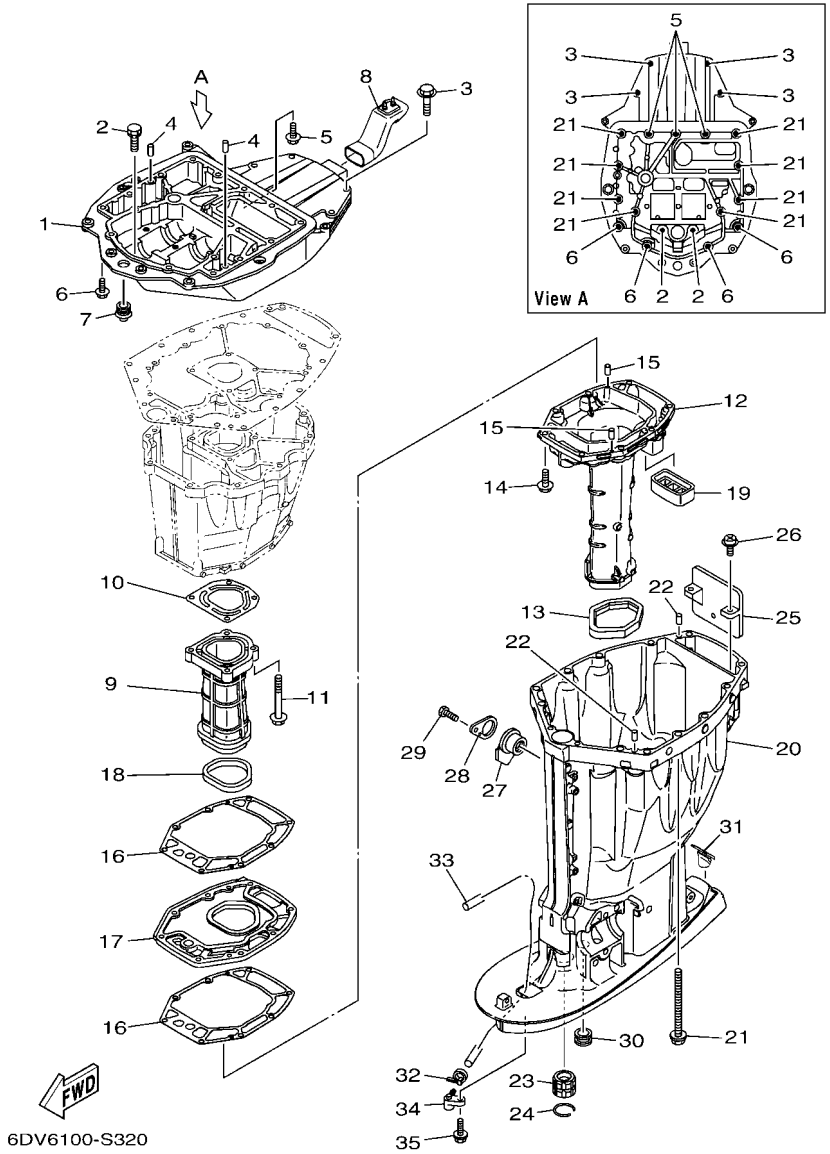

FIG. 32 UPPER CASING

REF. NO.	PART NO.	DESCRIPTION	XCA	XCA2	LCA	LCA2		REMARKS
1	63P–41137–05	GUIDE, EXHAUST	1	1	1	1		
2	90119–08182	BOLT, WITH WASHER	2	2	2	2		
3	97E75–10545	BOLT, HEXAGON W/W DEEP RECESS	4	4	4	4		
4	93608–16M16	PIN, DOWEL	2	2	2	2		
5	90119–08189	BOLT, WITH WASHER	3	3	3	3		
6	97E75–10535	BOLT, HEXAGON W/W DEEP RECESS	4	4	4	4		
7	6E5–42724–01	GROMMET	1	1	1	1		
8	6DA–42769–01	SEAL, RUBBER	1	1	1	1		
9	63P–41131–02	MANIFOLD, EXT. 1	1	1	1	1		
10	63P–41133–A0	GASKET, EXHAUST MANIFOLD 1	1	1	1	1		
11	97E75–08560	BOLT, HEXAGON W/W DEEP RECESS	4	4	4	4		
12	6DA–14711–01	MUFFLER 1	1	1				X(25.3")
	6DA–14711–11	MUFFLER 1			1	1		L(20.3")
13	69J–45123–00	GASKET, MUFFLER	1	1	1	1		
14	97E75–08535	BOLT, HEXAGON W/W DEEP RECESS	8	8	8	8		
15	93606–19M23	PIN, DOWEL	2	2	2	2		
16	63P–41134–A1	GASKET, EXHAUST MANIFOLD	2	2	2	2		
17	63P–45181–02	PLATE	1	1	1	1		
18	63P–41138–00	SEAL, EXT. 1	1	1	1	1		
19	69J–45127–01	SEAL	1	1	1	1		
20	6DA–45111–00–8D	CASING, UPPER	1					GRAY X(25.3")
	6DA–45111–00–CE	CASING, UPPER		1				WHITE X(25.3")
	6DA–45111–10–8D	CASING, UPPER			1			GRAY L(20.3")
	6DA–45111–10–CE	CASING, UPPER				1		WHITE L(20.3")
21	90119–10007	BOLT, WITH WASHER	8	8	8	8		
22	93608–16M16	PIN, DOWEL	2	2	2	2		
23	6E5–45318–00	BUSHING, DRIVE SHAFT	1	1	1	1		

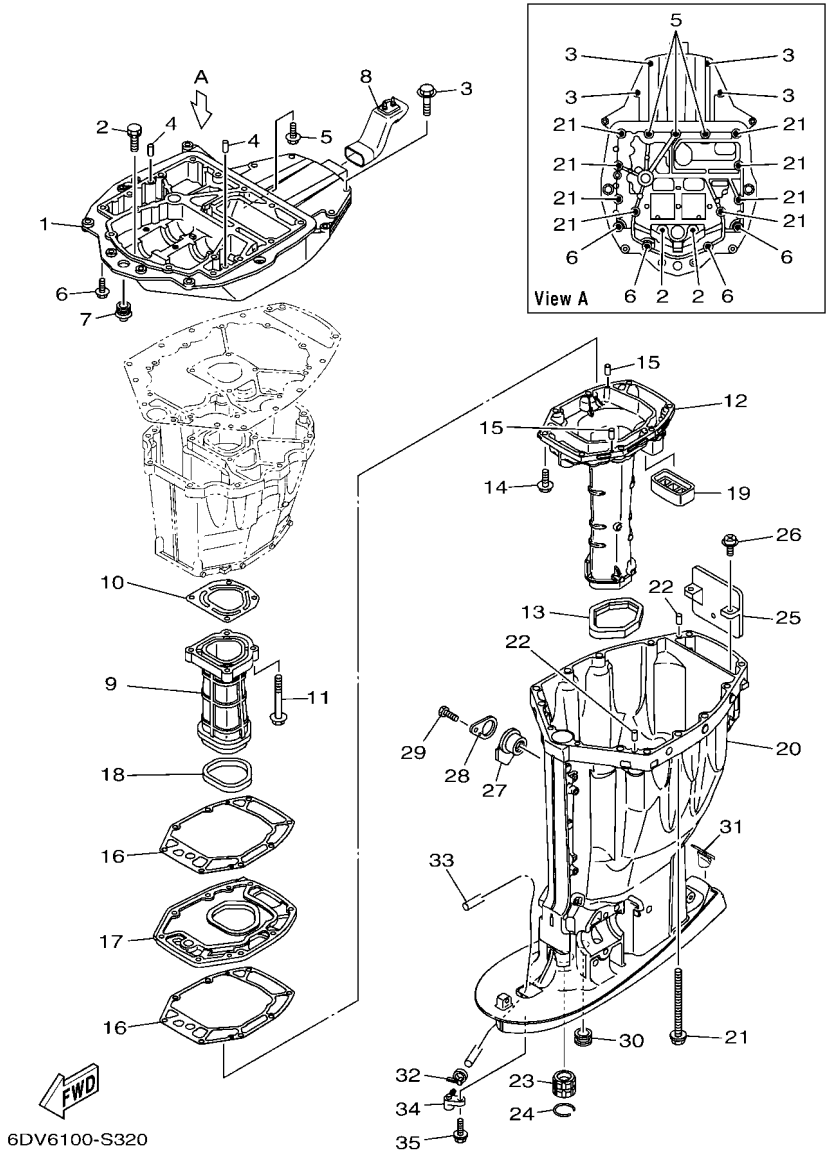

FIG. 32 UPPER CASING

REF. NO.	PART NO.	DESCRIPTION	XCA	XCA2	LCA	LCA2		REMARKS
24	93420–36M01	CIRCLIP	1	1	1	1		
25	69J–14624–01	COVER, EXHAUST	1	1	1	1		
26	97980–06216	SCREW, WITH WASHER	2	2	2	2		
27	6BB–15316–01	DAMPER 1	1	1				X(25.3")
28	6BB–45152–01	COVER, UPPER CASING 2	1	1				X(25.3")
29	97D95–06012	BOLT, HEXAGON DEEP RECESS	1	1				X(25.3")
30	6E5–44366–01	DAMPER, WATER SEAL 2	1	1	1	1		
31	6DA–45155–01	CAP	1	1				X(25.3")
	6C5–45155–01	CAP			1	1		L(20.3")
32	90465–11M10	CLAMP	1	1	1	1		FOR LAN SPEED
33	90445–07044	HOSE (L1800)	1	1				X(25.3")-FOR LAN SPEED
	90445–07045	HOSE (L1680)			1	1		L(20.3")-FOR LAN SPEED
34	63P–45379–00	NIPPLE, HOSE	1	1	1	1		
35	90119–06287	BOLT, WITH WASHER	1	1	1	1		

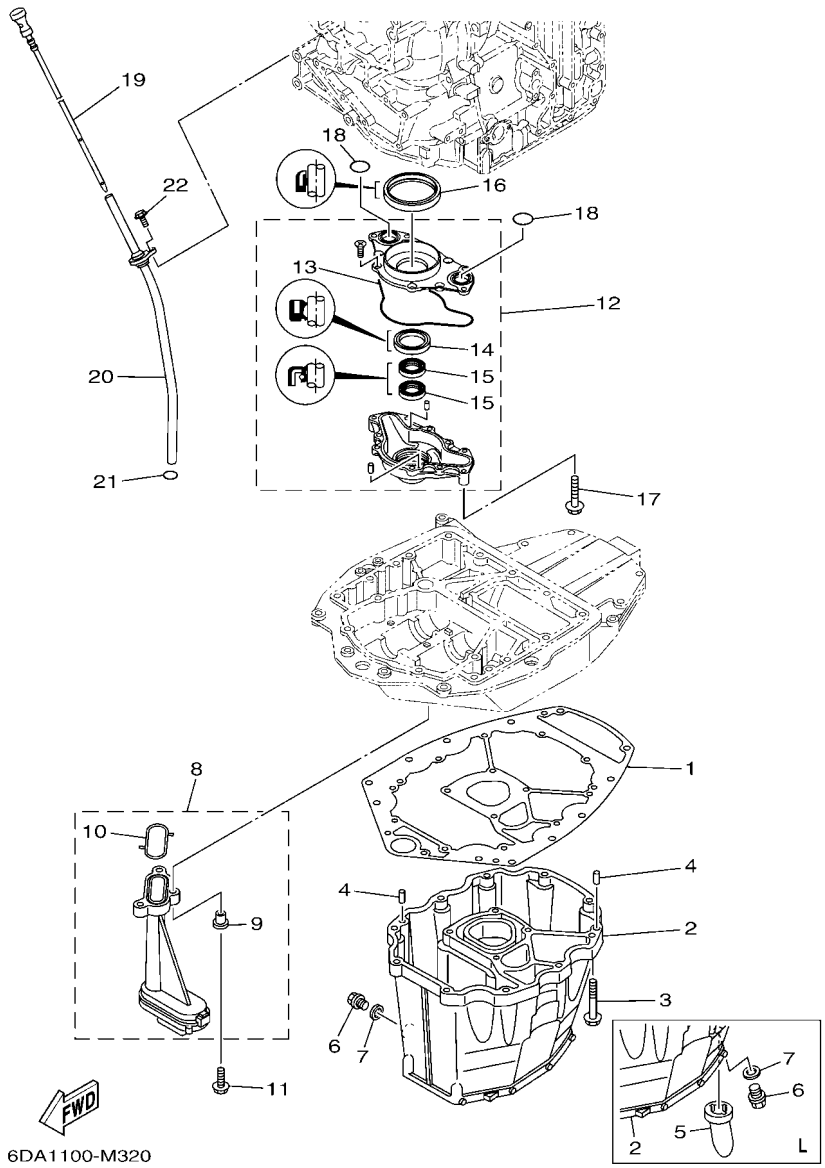

FIG. 33 OIL PAN

REF. NO.	PART NO.	DESCRIPTION	XCA	XCA2	LCA	LCA2		REMARKS
1	63P–15312–02	GASKET, OIL PAN	1	1	1	1		
2	6DA–15311–01	OIL PAN	1	1				X(25.3")
	63P–15311–03	OIL PAN			1	1		L(20.3")
3	97E75–08535	BOLT, HEXAGON W/W DEEP RECESS	10	10	10	10		
4	93608–16M16	PIN, DOWEL	2	2	2	2		
5	63P–15316–01	DAMPER 1			1	1		L(20.3")
6	90340–14M06	PLUG, STRAIGHT SCREW	1	1	1	1		
7	90430–14M09	GASKET	1	1	1	1		
8	63P–13411–00	STRAINER, OIL	1	1	1	1		
9	90387–06263	.COLLAR	3	3	3	3		
10	63P–13415–00	.SEAL, OIL STRAINER	1	1	1	1		
11	95812–06025	BOLT, FLANGE	3	3	3	3		
12	6DA–13300–00	OIL PUMP ASSY	1	1	1	1		
13	6DA–13329–00	.GASKET, PUMP COVER	1	1	1	1		
14	6AW–13119–00	.OIL SEAL	1	1	1	1		
15	69J–13631–00	.OIL SEAL	2	2	2	2		
16	6CB–11355–00	SEAL, CYLINDER 1	1	1	1	1		
17	97E75–06540	BOLT, HEXAGON W/W DEEP RECESS	4	4	4	4		
18	93210–25552	O-RING	2	2	2	2		
19	6DA–15362–00	PLUG, OIL LEVEL	1	1	1	1		
20	6DA–15377–00	GUIDE, INLET	1	1	1	1		
21	93210–19MJ3	O-RING	1	1	1	1		
22	95D95–06016	BOLT, FLANGE DEEP RECESS	1	1	1	1		

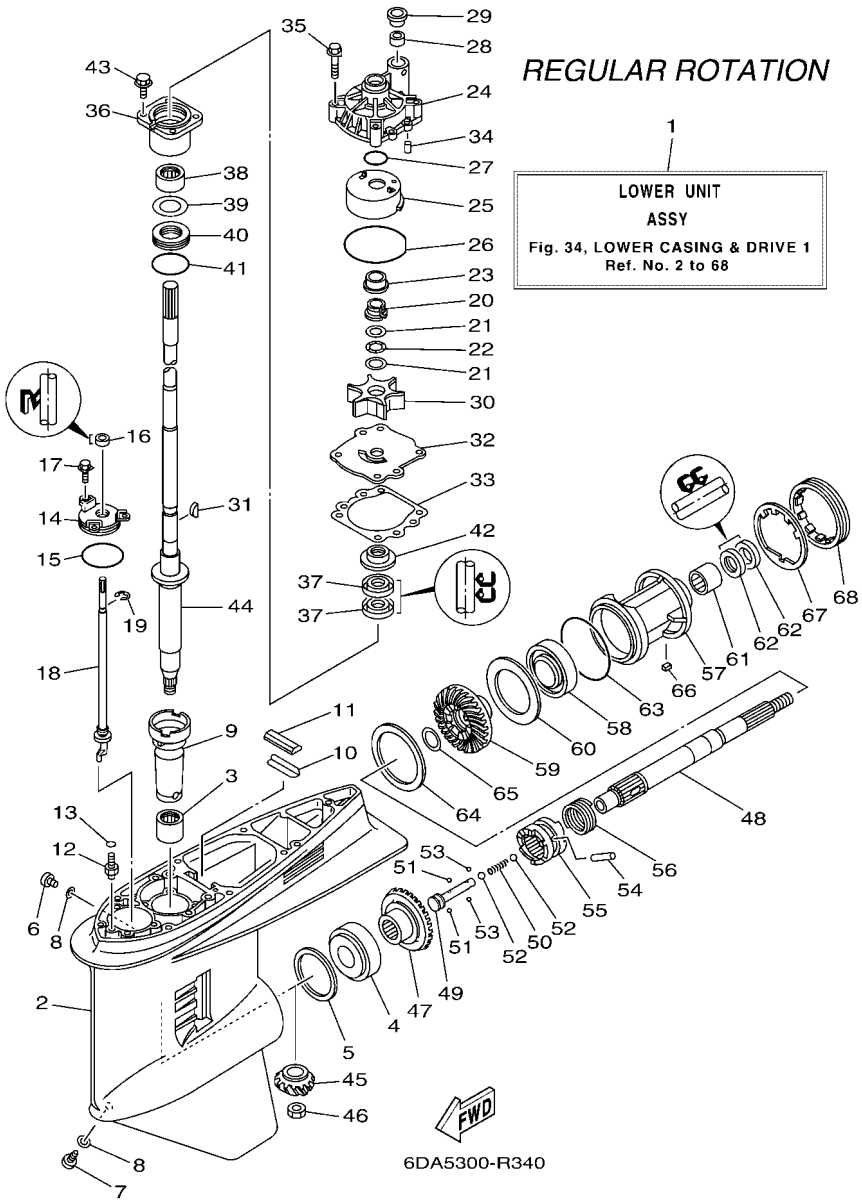

FIG. 34 LOWER CASING & DRIVE 1

REF. NO.	PART NO.	DESCRIPTION	XCA	XCA2	LCA	LCA2		REMARKS
1	6HP–45300–13–8D	LOWER UNIT ASSY	1					GRAY X(25.3"),RH
	6HP–45300–13–CE	LOWER UNIT ASSY		1				WHITE X(25.3"),RH
	6HP–45300–03–8D	LOWER UNIT ASSY			1			GRAY L(20.3"),RH
	6HP–45300–03–CE	LOWER UNIT ASSY				1		WHITE L(20.3"),RH
2	6J9–45301–07–8D	CASING, LOWER	1		1			GRAY
	6J9–45301–07–CE	CASING, LOWER		1		1		WHITE
3	93311–928U5	BEARING	1	1	1	1		
4	93332–000V3	BEARING	1	1	1	1		
5	6G5–45567–01	SHIM (T:0.10MM)	1	1	1	1		UR
	6G5–45567–10	SHIM (T:0.12MM)	1	1	1	1		UR
	6G5–45567–20	SHIM (T:0.15MM)	1	1	1	1		UR
	6G5–45567–30	SHIM (T:0.18MM)	1	1	1	1		UR
	6G5–45567–40	SHIM (T:0.30MM)	1	1	1	1		UR
	6G5–45567–50	SHIM (T:0.40MM)	1	1	1	1		UR
	6G5–45567–60	SHIM (T:0.50MM)	1	1	1	1		UR
6	90340–08002	PLUG, STRAIGHT SCREW	1	1	1	1		
7	688–45341–10	PLUG, DRAIN	1	1	1	1		
8	90430–08003	GASKET	2	2	2	2		
9	6G5–45536–01	SLEEVE, DRIVE SHAFT	1	1	1	1		
10	663–45376–00	GUIDE, SEAL DAMPER	1	1	1	1		
11	688–45375–00	DAMPER, SEAL	1	1	1	1		
12	63P–45378–00	NIPPLE, HOSE	1	1	1	1		
13	93210–07003	O-RING	1	1	1	1		
14	6E5–45321–00	PLATE	1	1	1	1		
15	93210–58144	O-RING	1	1	1	1		
16	93106–09014	OIL SEAL	1	1	1	1		
17	90119–06286	BOLT, WITH WASHER	3	3	3	3		

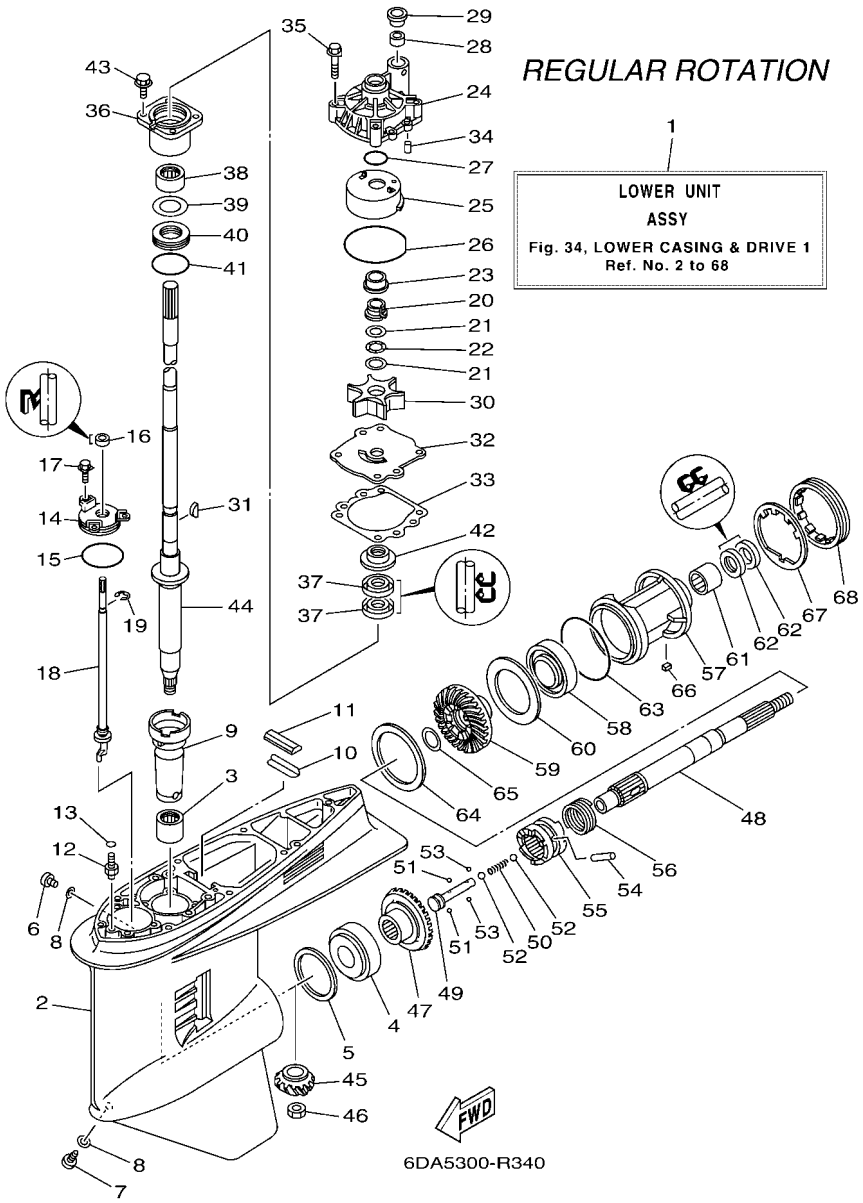

FIG. 34 LOWER CASING & DRIVE 1

REF. NO.	PART NO.	DESCRIPTION	XCA	XCA2	LCA	LCA2		REMARKS
18	63P–44150–01	SHIFT CAM ASSY	1	1	1	1		
19	99001–08600	CIRCLIP	1	1	1	1		
20	61A–45538–00	SPACER 1	1	1	1	1		
21	90201–22M01	WASHER, PLATE	2	2	2	2		
22	90206–22M19	WASHER, WAVE	1	1	1	1		
23	61A–45527–00	COLLAR, DRIVE SHAFT	1	1	1	1		
24	61A–44311–01	HOUSING, WATER PUMP	1	1	1	1		
25	61A–44322–02	INSERT, CARTRIDGE	1	1	1	1		
26	93210–86M38	O-RING	1	1	1	1		
27	93210–37160	O-RING	1	1	1	1		
28	6E5–44365–01	DAMPER, WATER SEAL 1	1	1	1	1		
29	6E5–44312–00	COVER, WATER PUMP HOUSING	1	1	1	1		
30	6E5–44352–01	IMPELLER	1	1	1	1		
31	90280–04M05	KEY, WOODRUFF	1	1	1	1		
32	6G5–44323–01	OUTER PLATE, CARTRIDGE	1	1	1	1		
33	6E5–44315–A0	GASKET, WATER PUMP	1	1	1	1		
34	93606–12019	PIN, DOWEL	2	2	2	2		
35	90119–08191	BOLT, WITH WASHER	4	4	4	4		
36	6E5–45331–00–9S	HOUSING, BEARING	1	1	1	1		
37	93101–28M16	OIL SEAL	2	2	2	2		
38	93317–330U2	BEARING	1	1	1	1		
39	6E5–45587–01	SHIM (T:0.10MM)	1	1	1	1		UR
	6E5–45587–10	SHIM (T:0.12MM)	1	1	1	1		UR
	6E5–45587–20	SHIM (T:0.15MM)	1	1	1	1		UR
	6E5–45587–30	SHIM (T:0.18MM)	1	1	1	1		UR
	6E5–45587–40	SHIM (T:0.30MM)	1	1	1	1		UR
	6E5–45587–50	SHIM (T:0.40MM)	1	1	1	1		UR

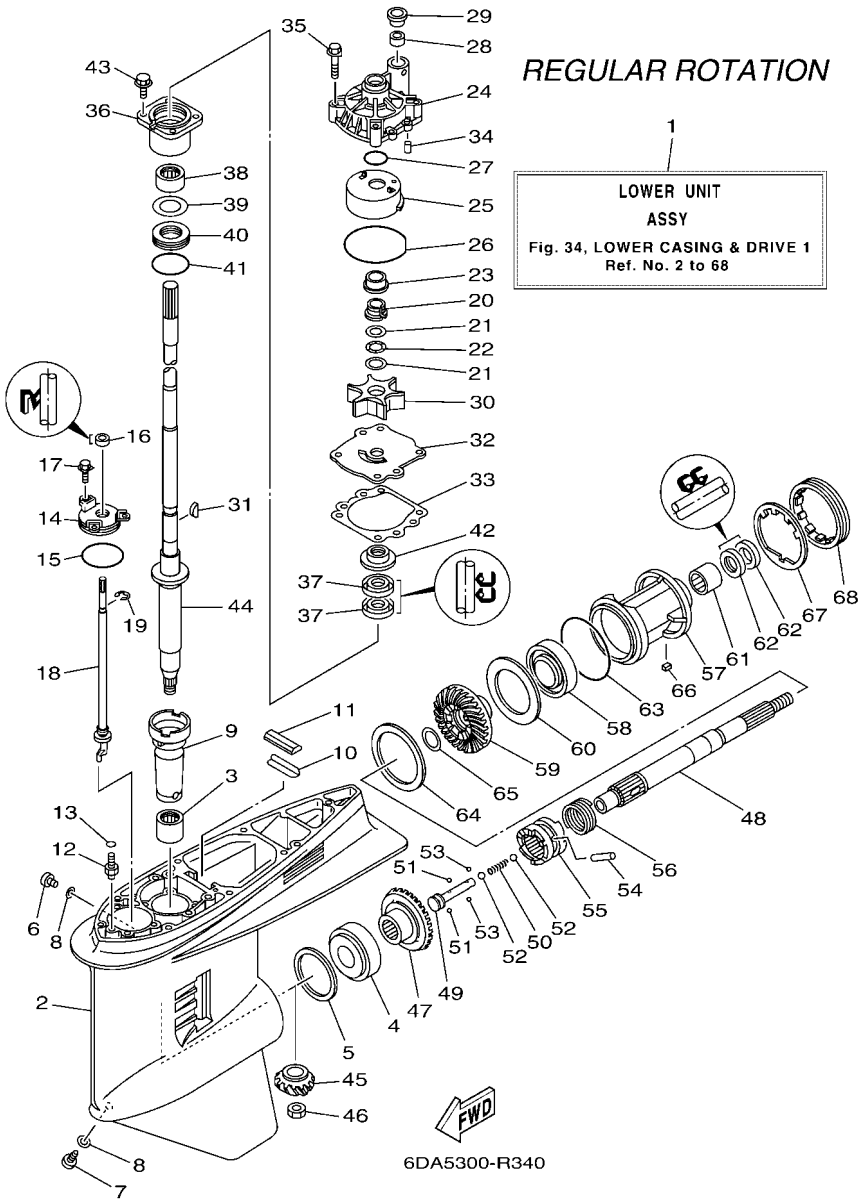

FIG. 34 LOWER CASING & DRIVE 1

REF. NO.	PART NO.	DESCRIPTION	XCA	XCA2	LCA	LCA2		REMARKS
39	6E5–45587–60	SHIM (T:0.50MM)	1	1	1	1		UR
40	93341–930V2	BEARING	1	1	1	1		
41	93210–55M14	O-RING	1	1	1	1		
42	6E5–45344–00	COVER, OIL SEAL	1	1	1	1		
43	97E95–08525	BOLT, HEXAGON W/W DEEP RECESS	4	4	4	4		
44	6DA–45501–10	DRIVE SHAFT COMP.	1	1				X(25.3")
	63P–45501–01	DRIVE SHAFT COMP.			1	1		L(20.3")
45	63P–45551–00	PINION (14T)	1	1	1	1		
46	90170–16M01	NUT	1	1	1	1		
47	6EH–45560–00	GEAR 1 (28T)	1	1	1	1		
48	6J9–45611–01	SHAFT, PROPELLER	1	1	1	1		
49	6E5–45634–02	SLIDE, SHIFT	1	1	1	1		
50	90501–16M37	SPRING, COMPRESSION	1	1	1	1		
51	93507–32009	BALL	2	2	2	2		
52	93511–32017	BALL	2	2	2	2		
53	93503–16003	BALL	2	2	2	2		
54	90250–08M07	PIN, STRAIGHT	1	1	1	1		
55	6DA–45631–01	CLUTCH, DOG	1	1	1	1		
56	6E5–45633–01	RING, CROSS PIN	1	1	1	1		
57	6J9–45332–00–CA	HOUSING, BEARING	1	1	1	1		
58	93306–209U0	BEARING	1	1	1	1		
59	6EH–45571–00	GEAR 2 (28T)	1	1	1	1		
60	6G5–45576–10	WASHER, THRUST 2	1	1	1	1		
61	93315–43061	BEARING	1	1	1	1		
62	93101–30M17	OIL SEAL	2	2	2	2		
63	93210–97M55	O-RING	1	1	1	1		
64	6G5–45577–02	SHIM (T:0.10MM)	1	1	1	1		UR

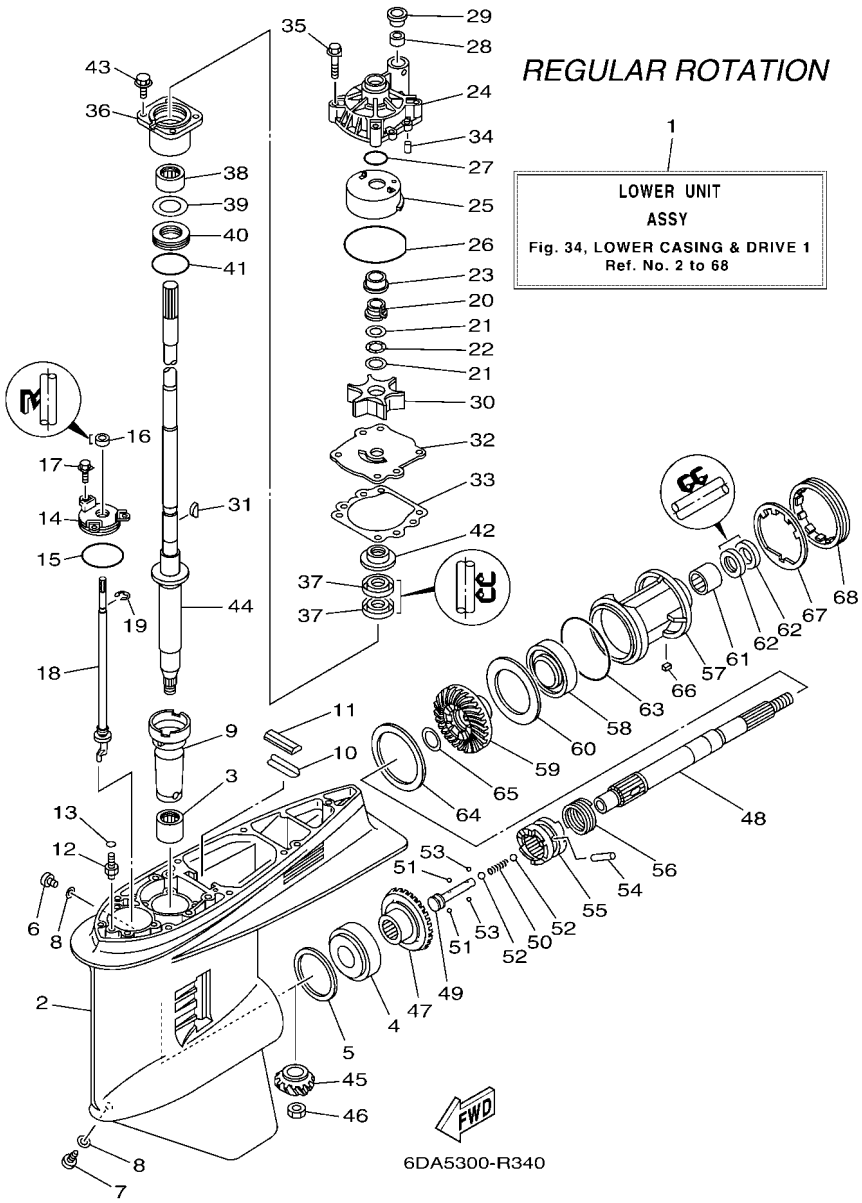

FIG. 34 LOWER CASING & DRIVE 1

REF. NO.	PART NO.	DESCRIPTION	XCA	XCA2	LCA	LCA2		REMARKS
64	6G5–45577–10	SHIM (T:0.12MM)	1	1	1	1		UR
	6G5–45577–20	SHIM (T:0.15MM)	1	1	1	1		UR
	6G5–45577–30	SHIM (T:0.18MM)	1	1	1	1		UR
	6G5–45577–40	SHIM (T:0.30MM)	1	1	1	1		UR
	6G5–45577–50	SHIM (T:0.40MM)	1	1	1	1		UR
	6G5–45577–60	SHIM (T:0.50MM)	1	1	1	1		UR
65	90201–30M92	WASHER, PLATE	1	1	1	1		
66	90282–04M00	KEY, STRAIGHT	1	1	1	1		
67	6G5–45383–01	WASHER, CLAW	1	1	1	1		
68	6G5–45384–02	NUT	1	1	1	1		

FIG. 35 LOWER CASING & DRIVE 2

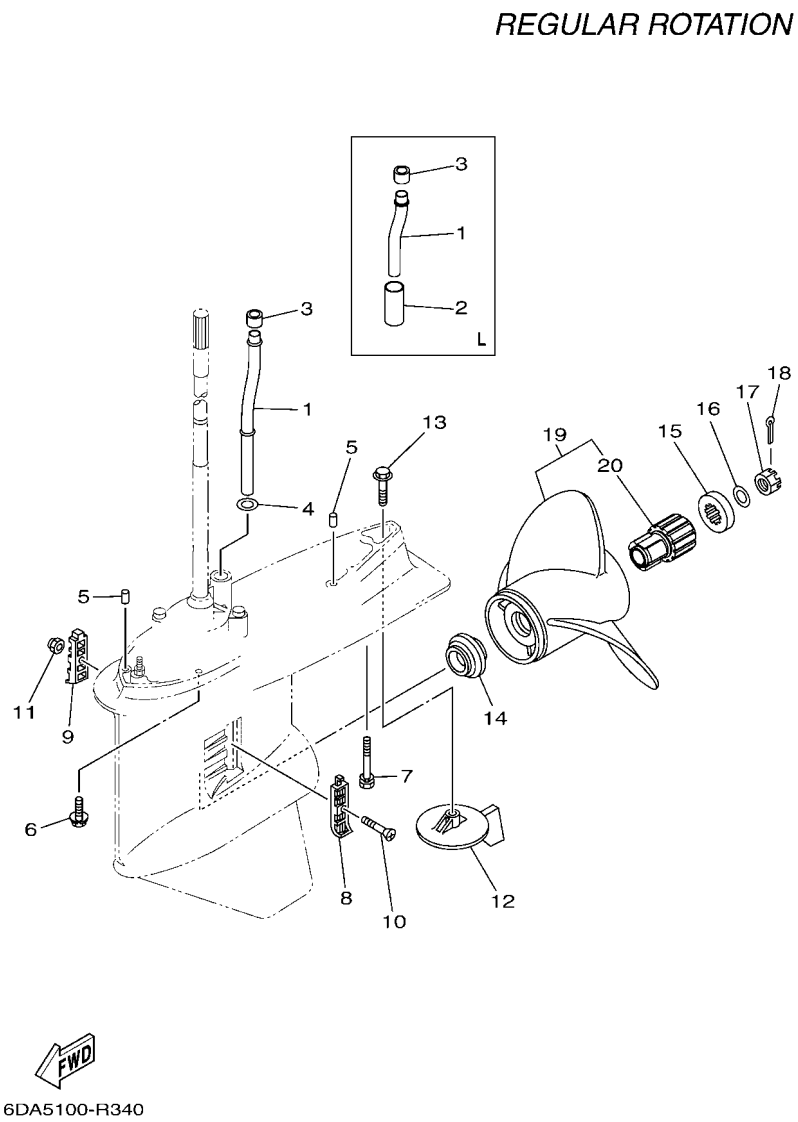

REF. NO.	PART NO.	DESCRIPTION	XCA	XCA2	LCA	LCA2		REMARKS
1	6DA–44361–00	TUBE, WATER 1	1	1				X(25.3")
	6DA–44361–10	TUBE, WATER 1			1	1		L(20.3")
2	90445–23002	HOSE (L59)			1	1		L(20.3")
3	6E5–44365–01	DAMPER, WATER SEAL 1	1	1	1	1		
4	90202–16061	WASHER, PLATE	1	1				X(25.3")
5	93608–16M16	PIN, DOWEL	2	2	2	2		
6	97E95–10645	BOLT, HEXAGON W/W DEEP RECESS	6	6	6	6		
7	90119–10072	BOLT, WITH WASHER	1	1	1	1		
8	6J9–45214–00	COVER, WATER INLET 1	1	1	1	1		
9	6J9–45215–00	COVER, WATER INLET 2	1	1	1	1		
10	90152–05M08	SCREW, COUNTERSUNK	1	1	1	1		
11	90185–05002	NUT, NYLON	1	1	1	1		
12	6J9–45371–01	TAB-TRIM	1	1	1	1		
13	90105–10M00	BOLT, FLANGE	1	1	1	1		
14	63P–45987–00	SPACER 1	1	1	1	1		
15	688–45997–01	SPACER 2	1	1	1	1		
16	92990–18200	WASHER	1	1	1	1		
17	90171–18M04	NUT, CASTLE	1	1	1	1		
18	91490–40030	PIN. COTTER	1	1	1	1		
19	68F–45932–20	PROPELLER (3X14-1/2"X13"-M)	1	1	1	1		UR SDS PROP.
	68F–45930–20	PROPELLER (3X14-1/2"X14"-M)	1	1	1	1		UR SDS PROP.
	68F–45970–20	PROPELLER (3X14-1/2"X15"-M)	1	1	1	1		UR SDS PROP.
	68F–45972–20	PROPELLER (3X14-1/4"X17"-M)	1	1	1	1		UR SDS PROP.
	68F–45978–20	PROPELLER (3X14-1/4"X18"-M)	1	1	1	1		UR SDS PROP.
	68F–45974–20	PROPELLER (3X13-3/4"X19"-M)	1	1	1	1		UR SDS PROP.
	68F–45976–20	PROPELLER (3X13-3/4"X21"-M)	1	1	1	1		UR SDS PROP.
20	6CE–45C81–10	.DAMPER RUBBER, PROPELLER 1	1	1	1	1		

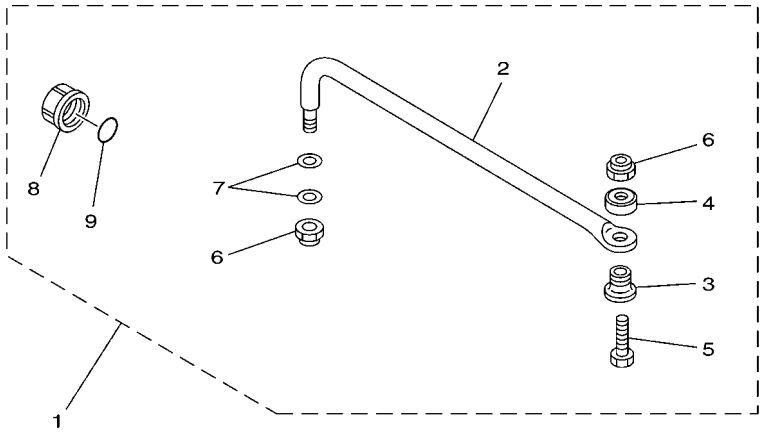

67H0100-9290

FIG. 36 STEERING GUIDE

REF. NO.	PART NO.	DESCRIPTION	XCA	XCA2	LCA	LCA2		REMARKS
1	6E5–61350–02	STEERING GUIDE ATTACHMENT KIT	1	1	1	1		AP
2	6E5–61351–01	.ROD, STEERING LINK	1	1	1	1		
3	90387–10M61	.COLLAR	1	1	1	1		
4	90560–12M01	.SPACER	1	1	1	1		
5	6E5–61355–00	.BOLT	1	1	1	1		
6	90185–09M01	.NUT, SELF-LOCKING	2	2	2	2		
7	90201–10M20	.WASHER, PLATE	2	2	2	2		
8	6E5–43145–01	.CAP, CLAMP BRACKET	1	1	1	1		
9	93210–16275	.O-RING	1	1	1	1		

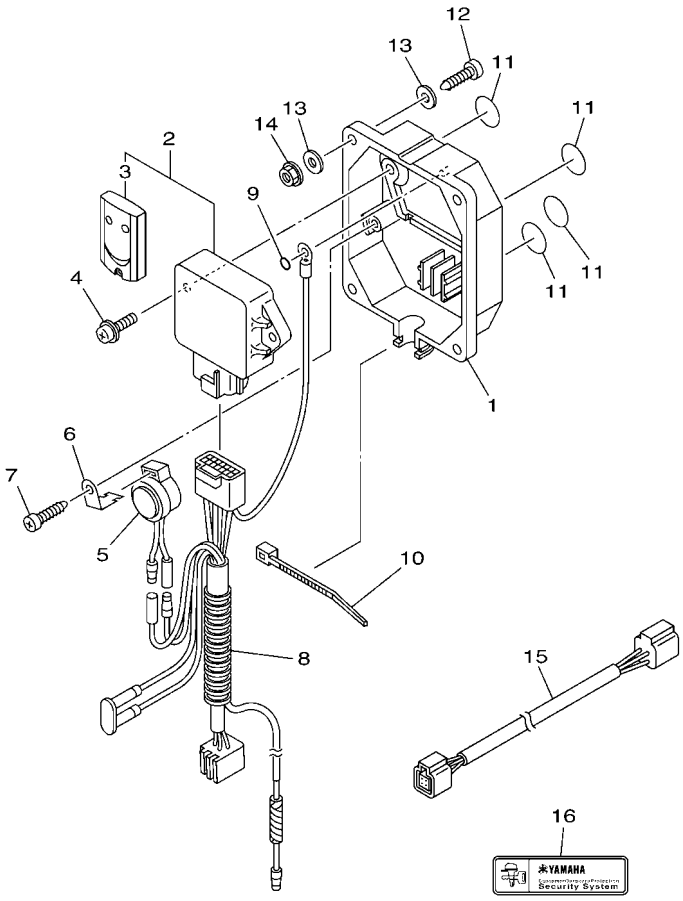

6CJ1100-K370

FIG. 37 OPTIONAL PARTS 1

REF. NO.	PART NO.	DESCRIPTION	XCA	XCA2	LCA	LCA2		REMARKS
1	6Y8–86267–00	CASE COMPLETE 1	1	1	1	1		
2	6Y8–86260–12	REMOTE CONTROL UNIT ASSY	1	1	1	1		
3	6AA–86261–22	.XMTR. COMP.	2	2	2	2		
4	97980–06216	SCREW, WITH WASHER	2	2	2	2		
5	6X4–83383–00	BUZZER	1	1	1	1		
6	6X4–83386–00	STAY, BUZZER	1	1	1	1		
7	97780–60620	SCREW, TAPPING	1	1	1	1		
8	6Y8–82509–10	WIRE, SUB LEAD	1	1	1	1		
9	93210–04279	O-RING	1	1	1	1		
10	90465–11M10	CLAMP	1	1	1	1		
11	6Y8–8454G–00	PATCH 1	4	4	4	4		
12	90167–06M00	SCREW, TAPPING	4	4	4	4		UR
	97880–06035	SCREW, PAN HEAD	4	4	4	4		UR
13	90201–06M30	WASHER, PLATE	8	8	8	8		
14	95780–06300	NUT, FLANGE	4	4	4	4		
15	6Y8–82521–11	2FT PIGTAIL BUS	1	1	1	1		
16	6Y8–48277–00	STICKER 1	4	4	4	4		

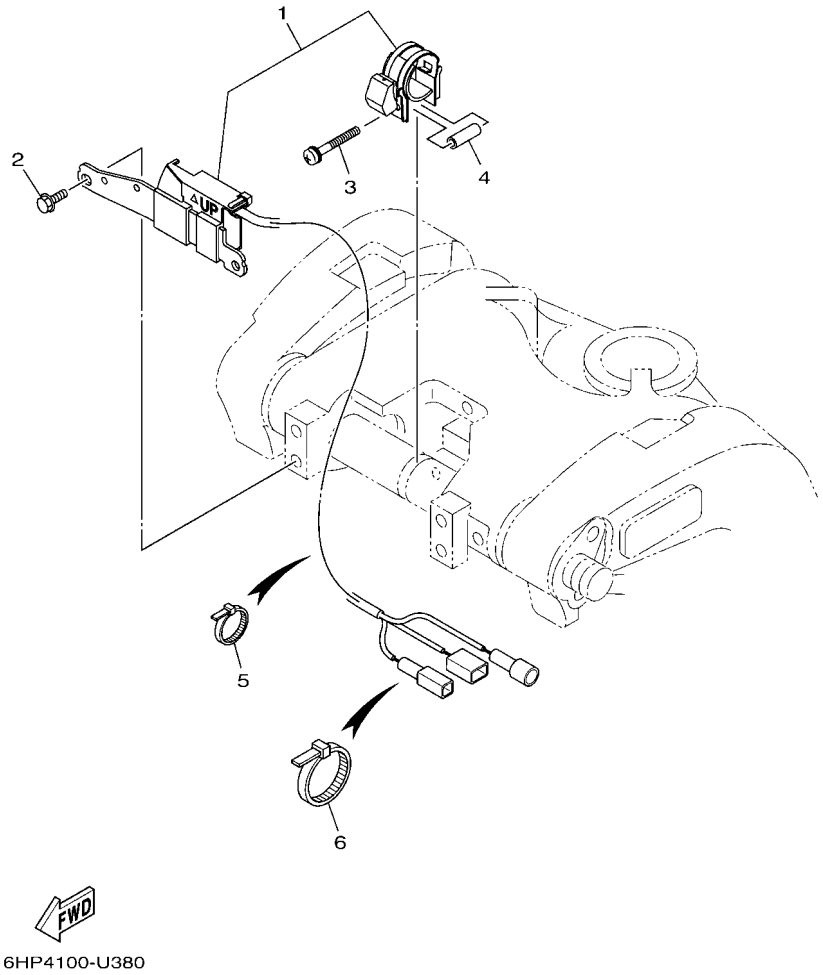

FIG. 38 OPTIONAL PARTS 2

REF. NO.	PART NO.	DESCRIPTION	XCA	XCA2	LCA	LCA2		REMARKS
1	6CE–825E0–01	TILT LIMIT SWITCH ASSY	1	1	1	1		
2	97E95–06516	BOLT, HEXAGON W/W DEEP RECESS	2	2	2	2		
3	90159–05059	SCREW, WITH WASHER	1	1	1	1		
4	90387–05004	COLLAR	1	1	1	1		
5	90465–11M10	CLAMP	9	9	9	9		
6	90465–13M18	CLAMP	1	1	1	1		

FIG. 39 OPTIONAL PARTS 3

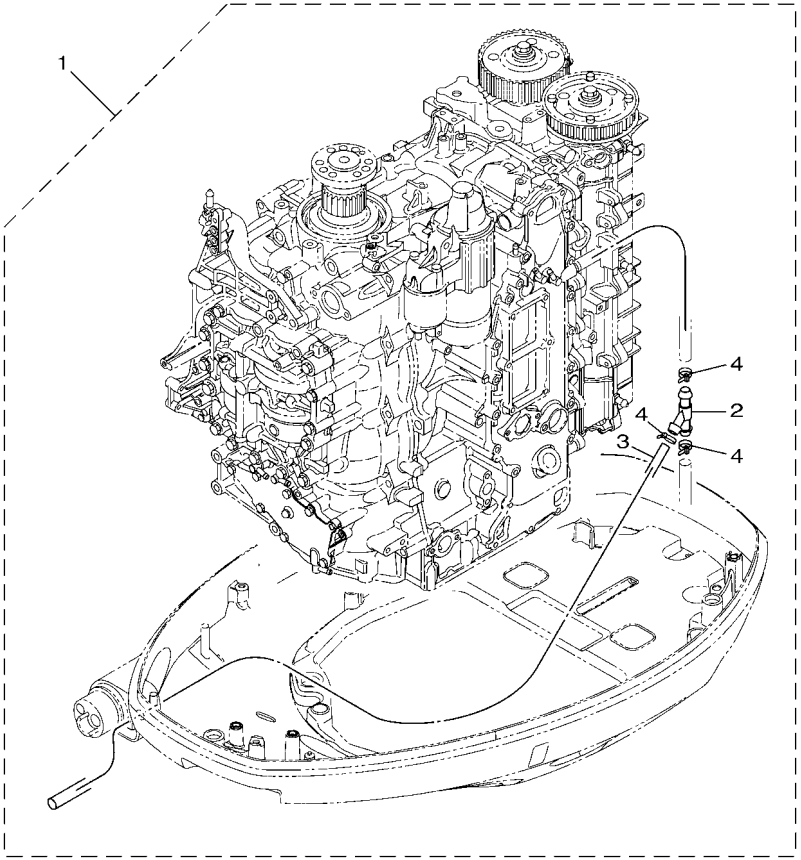

6HP4100-U390

REF. NO.	PART NO.	DESCRIPTION	XCA	XCA2	LCA	LCA2		REMARKS
1 *		FLUSHING HOSE KIT	1	1	1	1		LM
2	6DA–13758–00	.PIPE, JOINT	1	1	1	1		
3	6DA–14987–00	.HOSE	1	1	1	1		
4	90465–11M10	.CLAMP	3	3	3	3		

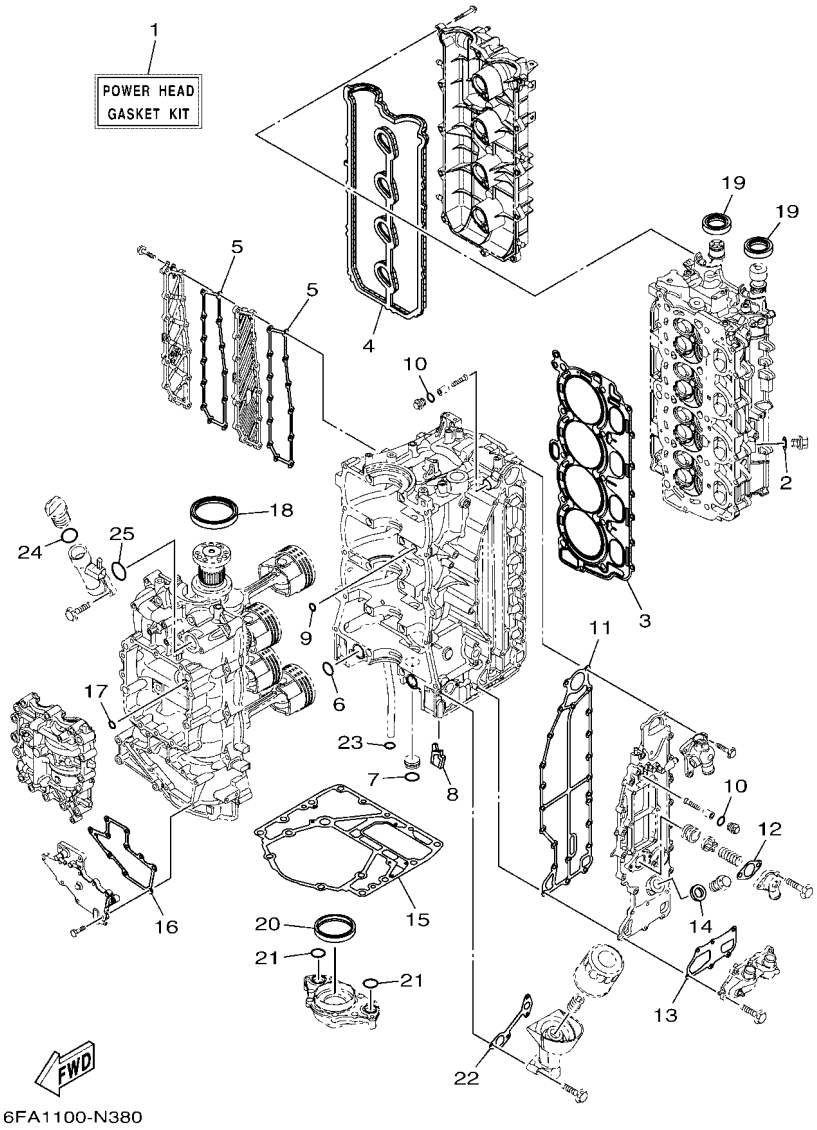

FIG. 40 REPAIR KIT 1

REF. NO.	PART NO.	DESCRIPTION	XCA	XCA2	LCA	LCA2		REMARKS
1	6FA–W0001–01	POWER HEAD GASKET KIT	1	1	1	1		
2	90430–14115	.GASKET	1	1	1	1		
3	6DA–11181–00	.GASKET, CYLINDER HEAD 1	1	1	1	1		
4	6DA–11193–00	.GASKET, HEAD COVER 1	1	1	1	1		
5	6DA–15353–01	.GASKET, DRAIN	2	2	2	2		
6	93210–25552	.O-RING	2	2	2	2		
7	93210–25647	.O-RING	1	1	1	1		
8	6DA–14664–00	.GROMMET, WATER SHUT	1	1	1	1		
9	93210–12648	.O-RING	1	1	1	1		
10	93210–13M63	.O-RING	2	2	2	2		
11	6DA–41114–01	.GASKET, EXHAUST OUTER COVER	1	1	1	1		
12	60V–11382–A0	.GASKET 2	1	1	1	1		
13	6DA–11381–01	.GASKET 1	1	1	1	1		
14	90201–186F1	.WASHER, PLATE	1	1	1	1		
15	63P–11351–03	.GASKET, CYLINDER	1	1	1	1		
16	6DA–15451–01	.GASKET, CRANKCASE COVER 1	1	1	1	1		
17	93210–08001	.O-RING	1	1	1	1		
18	93102–85008	.OIL SEAL	1	1	1	1		
19	93102–38008	.OIL SEAL	2	2	2	2		
20	6CB–11355–00	.SEAL, CYLINDER 1	1	1	1	1		
21	93210–25552	.O-RING	2	2	2	2		
22	6DA–13475–00	.GASKET	1	1	1	1		
23	93210–19MJ3	.O-RING	1	1	1	1		
24	93210–24M79	.O-RING	1	1	1	1		
25	93210–357A3	.O-RING	1	1	1	1		

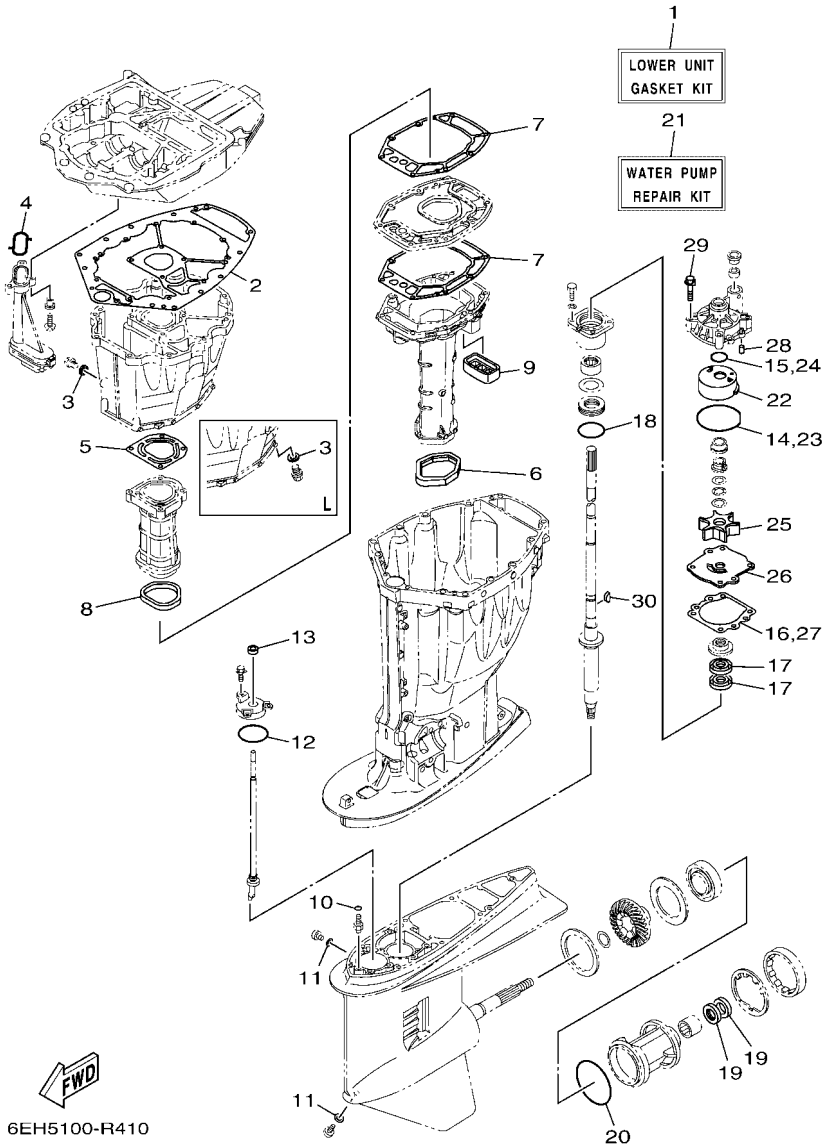

FIG. 41 REPAIR KIT 2

REF. NO.	PART NO.	DESCRIPTION	XCA	XCA2	LCA	LCA2		REMARKS
1	63P–W0001–22	LOWER UNIT GASKET KIT	1	1	1	1		
2	63P–15312–02	.GASKET, OIL PAN	1	1	1	1		
3	90430–14M09	.GASKET	1	1	1	1		
4	63P–13415–00	.SEAL, OIL STRAINER	1	1	1	1		
5	63P–41133–A0	.GASKET, EXHAUST MANIFOLD 1	1	1	1	1		
6	69J–45123–00	.GASKET, MUFFLER	1	1	1	1		
7	63P–41134–A1	.GASKET, EXHAUST MANIFOLD	2	2	2	2		
8	63P–41138–00	.SEAL, EXT. 1	1	1	1	1		
9	69J–45127–01	.SEAL	1	1	1	1		
10	93210–07003	.O-RING	2	2	2	2		
11	90430–08003	.GASKET	2	2	2	2		
12	93210–58144	.O-RING	1	1	1	1		
13	93106–09014	.OIL SEAL	1	1	1	1		
14	93210–86M38	.O-RING	1	1	1	1		
15	93210–37160	.O-RING	1	1	1	1		
16	6E5–44315–A0	.GASKET, WATER PUMP	1	1	1	1		
17	93101–28M16	.OIL SEAL	2	2	2	2		
18	93210–55M14	.O-RING	1	1	1	1		
19	93101–30M17	.OIL SEAL	2	2	2	2		
20	93210–97M55	.O-RING	1	1	1	1		
21	61A–W0078–A4	WATER PUMP REPAIR KIT	1	1	1	1		
22	61A–44322–02	.INSERT, CARTRIDGE	1	1	1	1		
23	93210–86M38	.O-RING	1	1	1	1		
24	93210–37160	.O-RING	1	1	1	1		
25	6E5–44352–01	.IMPELLER	1	1	1	1		
26	6G5–44323–01	.OUTER PLATE, CARTRIDGE	1	1	1	1		
27	6E5–44315–A0	.GASKET, WATER PUMP	1	1	1	1		

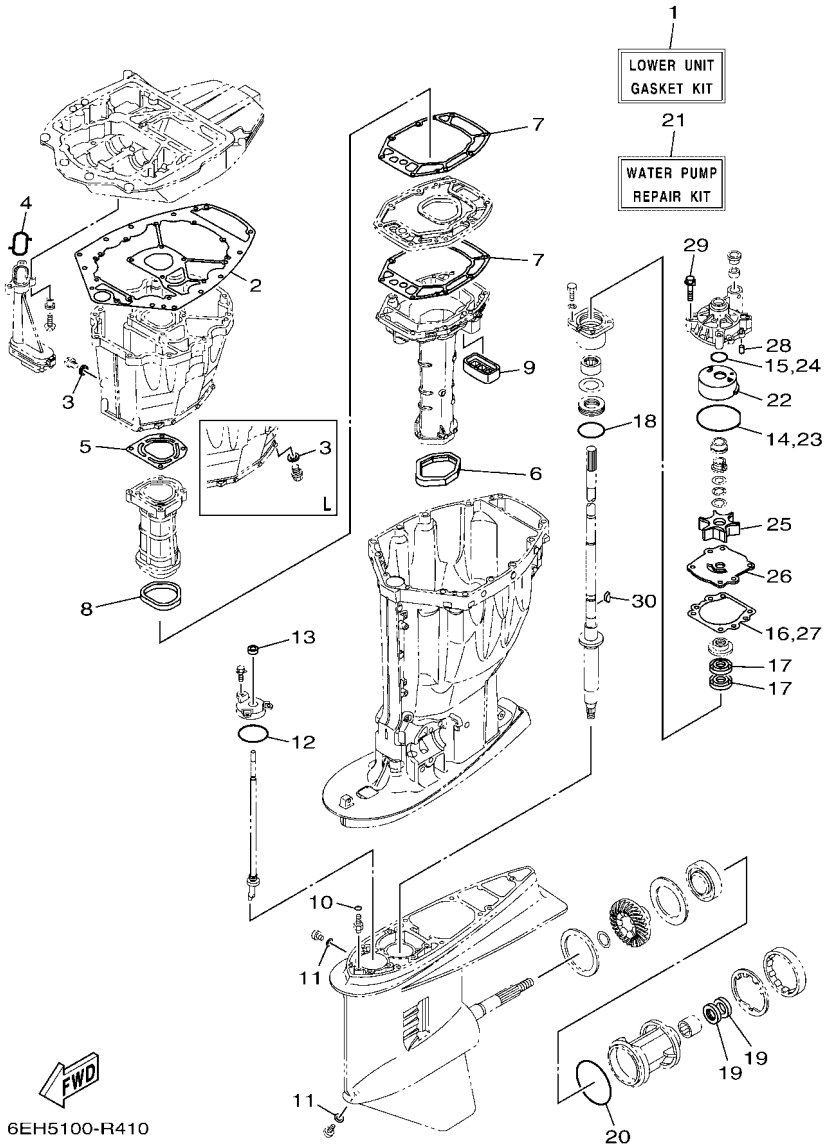

FIG. 41 REPAIR KIT 2

REF. NO.	PART NO.	DESCRIPTION	XCA	XCA2	LCA	LCA2		REMARKS
28	93606–12019	.PIN, DOWEL	2	2	2	2		
29	90119–08191	.BOLT, WITH WASHER	4	4	4	4		
30	90280–04M05	.KEY, WOODRUFF	1	1	1	1		

PART NO.	REF. NO.
6FA–11110–02–9S	5 – 2
6DA–11133–10	5 – 3
6DA–11181–00	5 – 17
	40 – 3
6DA–11191–00	5 – 22
6DA–11193–00	5 – 23
	40 – 4
6G8–11197–A0	6 – 1
67F–11301–01	5 – 11
69J–11301–01	6 – 15
68T–11325–00	1 – 3
	6 – 2
6E5–11325–00	1 – 2
	1 – 6
	3 – 8
	3 – 29
67F–11325–01	1 – 1
	1 – 4
	5 – 12
	6 – 16
67F–11328–01	5 – 13
	6 – 17
63P–11351–03	3 – 19
	40 – 15
6CB–11355–00	33 – 16
	40 – 20
6G5–11372–00	6 – 11
6DA–11381–01	6 – 22
	40 – 13
60V–11382–A0	6 – 13
	40 – 12
6DA–11410–00	4 – 1
6DA–11416–00	4 – 5
6DA–11416–10	4 – 5
6DA–11416–20	4 – 5
6DA–11417–00	4 – 6
6DA–11417–10	4 – 6
6DA–11417–20	4 – 6
6DA–11426–00	4 – 7
6DA–11427–00	4 – 8
6CB–11478–00	4 – 2
6DA–11500–00	3 – 20
63P–11512–00	3 – 23
6FA–11567–00	8 – 15
6DA–11590–00	8 – 18
6DA–11595–00	8 – 21
6FA–115A0–00	8 – 13
6CB–11603–00	4 – 12

PART NO.	REF. NO.
6DA–11631–20–94	4 – 11
6CB–11633–00	4 – 13
63P–11654–10	4 – 10
6JD–11656–00	4 – 15
6JD–11656–10	4 – 15
6JD–11656–20	4 – 15
6DA–11998–00	26 – 21
6DA–11999–00	26 – 23
6CB–12111–00	8 – 1
6CB–12113–00	8 – 4
51Y–12119–00	8 – 7
6DA–12121–00	8 – 2
6FA–12171–00	8 – 9
6DA–12181–01	8 – 11
6DA–12411–01	1 – 5
	6 – 25
6AW–12412–00	6 – 26
6DA–12413–A0–9S	6 – 27
60H–12416–00	6 – 8
6DA–1241B–A0–9S	6 – 47
6DA–1243A–00	6 – 12
6DA–1243E–00	6 – 28
6DA–1244H–00	6 – 30
6DA–12491–00	6 – 34
6DA–12527–00–9S	6 – 21
6DA–12552–00	7 – 13
6AW–12572–00	26 – 4
6DA–12576–00	7 – 1
	11 – 6
6DA–12578–00	7 – 6
6DA–12579–00	7 – 11
6R3–12581–00	26 – 5
6AW–12582–00	26 – 6
6R3–12583–00	26 – 7
6DA–12589–00	7 – 2
	7 – 15
6S5–12858–00	6 – 38
6CB–13016–00	1 – 10
	12 – 5
6AW–13119–00	33 – 14
6AW–13132–00	12 – 25
6DA–13152–00	9 – 3
6DA–13160–01	10 – 6
6DA–13161–01	10 – 7
6DA–13300–00	33 – 12
6DA–13329–00	33 – 13
63P–13411–00	33 – 8
63P–13415–00	33 – 10

PART NO.	REF. NO.
63P–13415–00	41 – 4
63P–13437–63	16 – 27
69J–13440–04	1 – 8
	6 – 37
6DA–13446–01	6 – 39
6DA–13475–00	6 – 40
	40 – 22
63P–13490–00	3 – 31
6DA–13532–00	11 – 1
6DA–13545–00	11 – 18
68V–13546–10	11 – 20
6FA–13547–00	11 – 24
6FA–13548–00	11 – 21
6DA–13564–00	10 – 4
6AW–13577–10	10 – 10
6CB–13593–00	12 – 22
69J–13631–00	33 – 15
6DA–13641–00	9 – 11
6DA–13645–00	9 – 13
6DA–13646–00	9 – 12
63P–13716–00	12 – 21
6DA–13751–01	9 – 1
6DA–13758–00	39 – 2
6DA–13761–00	10 – 8
6AW–13781–00	12 – 29
6AW–13784–00	12 – 32
6DA–13881–00	9 – 19
6DA–13892–00	12 – 11
6DA–13893–00	12 – 12
6CB–13906–01	12 – 8
6P2–13907–21	12 – 23
63P–13915–00	1 – 11
	12 – 24
6AW–1410B–00	10 – 9
6DA–14146–00	12 – 10
6P2–14149–00	12 – 35
6DA–14180–02	12 – 1
6DA–14181–00	12 – 14
6DA–14182–00	12 – 2
6P2–14191–00	12 – 15
6CB–14216–00	12 – 6
6CB–14239–00	12 – 16
6P2–14386–00	12 – 31
6P2–1441J–01	9 – 7
6CB–14429–01	12 – 18
6DA–14440–00	9 – 5
6CB–1447B–00	12 – 28
6CB–14546–00	12 – 27

PART NO.	REF. NO.
6CB–14564–00	12 – 9
63P–14567–00	12 – 20
69J–14624–01	32 – 25
6DA–14664–00	40 – 8
6DA–14664–01	3 – 15
6DA–14711–01	32 – 12
6DA–14711–11	32 – 12
6DA–1475A–00	11 – 11
6DA–1475F–00	11 – 13
6DA–1475G–00	11 – 16
6CB–14984–00	1 – 12
	12 – 30
6CB–14985–00	12 – 26
6DA–14987–00	39 – 3
6CB–14989–00	11 – 15
6DA–15109–01–9S	3 – 2
6DA–15311–01	33 – 2
63P–15311–03	33 – 2
63P–15312–02	33 – 1
	41 – 2
63P–15316–01	33 – 5
6BB–15316–01	32 – 27
6DA–15319–00	6 – 44
6DA–15353–01	3 – 7
	40 – 5
6DA–15362–00	33 – 19
6G8–15363–00	6 – 42
6DA–15373–00	9 – 9
6DA–15377–00	33 – 20
6DA–15411–00–9S	3 – 24
6DA–15414–00–9S	3 – 4
6DA–15423–00–9S	3 – 6
6DA–15451–01	3 – 25
	40 – 16
6DA–2134X–00	10 – 30
63D–21744–00	11 – 23
6E5–21744–00	11 – 22
6DA–2416A–00	11 – 14
6P2–24170–00	10 – 27
63P–2419A–01	10 – 28
6CB–24217–00	12 – 7
6DA–24310–01	13 – 2
6DA–24313–00	14 – 19
6DA–24314–00	14 – 3
6DA–24317–00	13 – 12
6DA–24323–00	13 – 15
6DA–24324–00	13 – 8
6E5–24351–51	14 – 4

PART NO.	REF. NO.
6YK–24360–73	15 – 1
6CE–24377–00	7 – 3
	11 – 7
6AW–24377–01	14 – 2
688–24378–00	11 – 19
6CE–24378–00	6 – 29
6E5–24378–00	13 – 11
69J–24379–00	12 – 13
6GR–24410–01	10 – 15
6DA–24425–00	10 – 13
6DA–24426–00	10 – 18
6CB–24452–10	12 – 17
4SV–24453–00	12 – 33
6CB–24460–00	12 – 4
6DA–24462–00	10 – 23
6P3–24469–00	14 – 11
6CB–24482–00	12 – 19
6DA–24491–00	10 – 17
6DA–24492–01	10 – 16
6CB–24501–01	1 – 9
	12 – 3
6P3–24519–00	14 – 12
6P3–24560–04	14 – 8
6P3–24562–03	14 – 10
6P3–24563–01	1 – 13
6P3–24563–02	14 – 9
6P3–24564–00	1 – 14
	14 – 13
6DA–24566–00	14 – 14
6DA–24596–00	14 – 6
69J–28100–03	14 – 21
67F–2812A–00	17 – 28
6DA–41113–00–9S	6 – 5
6DA–41114–01	6 – 6
	40 – 11
63P–41131–02	32 – 9
63P–41133–A0	32 – 10
	41 – 5
63P–41134–A1	32 – 16
	41 – 7
63P–41137–05	32 – 1
63P–41138–00	32 – 18
	41 – 8
6DV–42195–00	27 – 9
6BG–42384–00	26 – 2
6DA–42384–00	24 – 23
6DA–42510–00–8D	29 – 8
6DA–42510–00–CE	29 – 8

PART NO.	REF. NO.
6DA–42510–10–8D	29 – 8
6DA–42510–10–CE	29 – 8
6DA–42541–00	26 – 8
6HP–42610–01	2 – 1
6HP–42610–10–CE	2 – 1
6DA–42615–00	24 – 5
6DA–42617–00	16 – 26
6DA–4261A–02	2 – 2
6DA–4261A–02–CE	2 – 2
60V–42629–01	22 – 7
6CB–42647–A0	2 – 3
6DA–42662–01	3 – 33
6CB–42662–02	26 – 25
6AW–42663–01	2 – 9
6DA–42675–00	2 – 14
6DA–42675–10	2 – 14
6DA–42676–00	2 – 15
6DA–42676–10	2 – 15
63P–42677–60	2 – 16
63P–42677–70	2 – 16
63P–42678–60	2 – 13
63P–42678–70	2 – 13
63P–42681–20	2 – 17
63P–42681–30	2 – 17
6DA–42697–00	2 – 12
6DA–42710–00–8D	24 – 1
6DA–42710–00–CE	24 – 1
63P–42716–01	24 – 6
6DA–42717–01	24 – 22
69J–42723–01	20 – 10
6E5–42724–01	32 – 7
6CE–42725–03	24 – 2
6H1–42726–22	26 – 1
61A–42727–01	24 – 26
6DA–42740–01	25 – 1
6DA–42741–11–8D	25 – 1
6DA–42741–11–CE	25 – 1
6DA–42744–00	3 – 32
6BG–42748–01	16 – 16
6H4–42748–01	24 – 24
68F–42753–00	24 – 30
63P–42756–00	26 – 12
6CB–42761–00	24 – 3
6DA–42769–01	32 – 8
6DA–42770–01	25 – 2
6EE–42794–40	24 – 32
6EE–42794–50	24 – 33
6DA–42815–01–8D	24 – 7

PART NO.	REF. NO.
6DA–42815–01–CE	24 – 7
6DA–42816–02–8D	24 – 8
6DA–42816–02–CE	24 – 8
6DA–42817–02–8D	24 – 9
6DA–42817–02–CE	24 – 9
6CB–42818–00	24 – 13
6CB–42819–00	24 – 14
64E–43111–02–8D	28 – 1
64E–43111–02–CE	28 – 1
64E–43112–02–8D	28 – 7
64E–43112–02–CE	28 – 7
64E–43126–10	28 – 35
64E–43131–30	28 – 11
64E–43139–11	29 – 1
66T–43144–00	24 – 17
6G5–43144–00	28 – 25
6E5–43145–01	36 – 8
6G5–43148–00	28 – 30
6G5–43181–02	28 – 27
6G5–43185–02	28 – 28
64E–43311–10–8D	28 – 21
64E–43311–10–CE	28 – 21
64E–43311–20–8D	28 – 21
64E–43311–20–CE	28 – 21
63P–43338–10	30 – 54
61A–43376–00	29 – 6
63P–43800–21	30 – 1
63P–43801–10	30 – 4
63P–43802–20	30 – 37
6EK–43804–11	31 – 3
6EK–43805–01	31 – 2
6EK–4380F–00	31 – 6
63P–4380L–21	30 – 2
63P–4380P–20	30 – 9
63P–43810–21	30 – 3
63P–43811–20	30 – 6
63P–43812–20	30 – 23
63P–43814–20	30 – 13
6CJ–43816–00	30 – 61
63P–43816–10	30 – 20
6BC–43818–00	28 – 19
63P–4381C–20	30 – 41
63P–4381J–10	30 – 62
63P–43820–20	30 – 26
63P–43821–21	30 – 25
6CJ–43829–10	30 – 17
63P–4382A–10	30 – 31
63P–4382C–20	30 – 15

PART NO.	REF. NO.
63P–43830–20	30 – 42
69J–43831–00	30 – 66
6H1–43841–11	30 – 18
63P–43843–10	30 – 53
6H1–43844–10	30 – 45
63P–43844–20	30 – 51
63P–43845–20	30 – 34
63P–43847–10	30 – 29
6H1–4384G–11	30 – 44
63P–4384G–20	30 – 55
63P–4384H–10	30 – 32
63P–43851–20	30 – 48
63P–43854–10	30 – 30
69J–43855–00	30 – 52
6H1–43856–10	30 – 46
63P–43857–10	30 – 59
63P–4385H–10	30 – 60
6CJ–43861–10	30 – 68
63P–43861–20	30 – 7
6EK–43862–00	31 – 12
6H1–43862–00	30 – 10
	30 – 12
63P–43862–10	30 – 24
6D8–43863–00	30 – 22
63P–43863–10	30 – 8
6H1–43866–01	30 – 39
62X–4386K–00	31 – 7
62X–43871–00	30 – 27
61A–43876–01	30 – 36
63P–43876–10	30 – 19
61A–43878–00	30 – 65
63P–43879–10	31 – 8
63P–43880–22	31 – 1
63P–43881–21	31 – 10
6EK–43882–00	31 – 11
6EK–43892–00	31 – 4
69J–4389J–00	30 – 33
6DV–44100–00	27 – 16
6DV–44118–00	27 – 21
6DV–44120–02	27 – 23
6DV–44120–11	27 – 23
6DV–44121–00	27 – 18
6DV–44122–00	27 – 10
6DV–44132–00	27 – 11
6DV–44142–00	27 – 7
63P–44150–01	34 – 18
6DA–44194–00	29 – 35
61A–44311–01	34 – 24

PART NO.	REF. NO.
6E5–44312–00	34 – 29
6E5–44315–A0	34 – 33
	41 – 16
	41 – 27
61A–44322–02	34 – 25
	41 – 22
6G5–44323–01	34 – 32
	41 – 26
6E5–44352–01	34 – 30
	41 – 25
6DA–44361–00	35 – 1
6DA–44361–10	35 – 1
6E5–44365–01	34 – 28
	35 – 3
6E5–44366–01	32 – 30
6P2–44391–00	24 – 25
63P–44511–00	29 – 37
6DA–44514–00	29 – 28
6DA–44526–00	29 – 32
6G5–44526–00	28 – 3
6DA–44532–00	29 – 33
69J–44533–00	29 – 22
68V–44551–00–8D	29 – 13
6DA–44551–00–CA	29 – 13
68V–44551–00–CE	29 – 13
6DA–44552–00–CA	29 – 25
63P–44553–00–8D	29 – 25
63P–44553–00–CE	29 – 25
60V–44555–00	29 – 16
63P–44555–00	29 – 16
63P–44556–00–8D	29 – 26
63P–44556–00–CE	29 – 26
6DA–44575–00	29 – 15
61A–44575–01	29 – 15
6DA–45111–00–8D	32 – 20
6DA–45111–00–CE	32 – 20
6DA–45111–10–8D	32 – 20
6DA–45111–10–CE	32 – 20
69J–45123–00	32 – 13
	41 – 6
69J–45127–01	32 – 19
	41 – 9
6BB–45152–01	32 – 28
6C5–45155–01	32 – 31
6DA–45155–01	32 – 31
63P–45181–02	32 – 17
6J9–45214–00	35 – 8
6J9–45215–00	35 – 9

PART NO.	REF. NO.
6AW–45251–00	1 – 15
	28 – 2
6HP–45300–03–8D	34 – 1
6HP–45300–03–CE	34 – 1
6HP–45300–13–8D	34 – 1
6HP–45300–13–CE	34 – 1
6J9–45301–07–8D	34 – 2
6J9–45301–07–CE	34 – 2
6E5–45318–00	32 – 23
6E5–45321–00	34 – 14
6E5–45331–00–9S	34 – 36
6J9–45332–00–CA	34 – 57
688–45341–10	34 – 7
6E5–45344–00	34 – 42
6J9–45371–01	1 – 17
	35 – 12
688–45375–00	34 – 11
663–45376–00	34 – 10
63P–45378–00	34 – 12
63P–45379–00	32 – 34
6G5–45383–01	34 – 67
6G5–45384–02	34 – 68
63P–45501–01	34 – 44
6DA–45501–10	34 – 44
61A–45527–00	34 – 23
6G5–45536–01	34 – 9
61A–45538–00	34 – 20
63P–45551–00	34 – 45
6EH–45560–00	34 – 47
6G5–45567–01	34 – 5
6G5–45567–10	34 – 5
6G5–45567–20	34 – 5
6G5–45567–30	34 – 5
6G5–45567–40	34 – 5
6G5–45567–50	34 – 5
6G5–45567–60	34 – 5
6EH–45571–00	34 – 59
6G5–45576–10	34 – 60
6G5–45577–02	34 – 64
6G5–45577–10	34 – 64
6G5–45577–20	34 – 64
6G5–45577–30	34 – 64
6G5–45577–40	34 – 64
6G5–45577–50	34 – 64
6G5–45577–60	34 – 64
6E5–45587–01	34 – 39
6E5–45587–10	34 – 39
6E5–45587–20	34 – 39

PART NO.	REF. NO.
6E5–45587–30	34 – 39
6E5–45587–40	34 – 39
6E5–45587–50	34 – 39
6E5–45587–60	34 – 39
6J9–45611–01	34 – 48
6DA–45631–01	34 – 55
6E5–45633–01	34 – 56
6E5–45634–02	34 – 49
68F–45930–20	35 – 19
68F–45932–20	35 – 19
68F–45970–20	35 – 19
68F–45972–20	35 – 19
68F–45974–20	35 – 19
68F–45976–20	35 – 19
68F–45978–20	35 – 19
63P–45987–00	35 – 14
688–45997–01	35 – 15
6CE–45C81–10	35 – 20
6DV–4820A–01	27 – 1
6Y8–48277–00	37 – 16
6E5–61350–02	36 – 1
6E5–61351–01	36 – 2
6E5–61355–00	36 – 5
6DV–68303–00	27 – 31
6DA–8132G–01	16 – 19
6DA–81336–01	17 – 30
6DA–81337–00	16 – 12
6DA–81410–00	16 – 3
6CB–81639–10	17 – 24
6CB–81800–01	23 – 1
69J–81801–11	23 – 5
6CB–81807–00	23 – 8
6CB–81809–00	23 – 14
67F–81810–00	23 – 3
67F–81813–00	23 – 6
6CB–81820–00	23 – 7
67F–81821–00	23 – 11
6DA–81822–00	21 – 6
6CB–81826–00	23 – 22
69J–81828–00	23 – 23
67F–81830–00	23 – 16
6CB–81832–00	23 – 9
6CB–81836–00	23 – 10
6C5–81839–00	23 – 19
67F–8183R–00	23 – 13
60V–8183T–00	23 – 17
6P2–8183X–00	18 – 5
69J–81840–11	23 – 4

PART NO.	REF. NO.
67F–81841–00	23 – 12
6CB–81842–00	23 – 18
67F–81846–00	23 – 24
67F–81850–00	23 – 2
6C5–81869–00	23 – 21
67F–81891–00	23 – 15
6DV–81919–01	17 – 33
60V–81925–00	21 – 4
6C5–81941–00	23 – 20
6DA–81942–00	18 – 11
6DA–81948–01	17 – 5
69J–81949–03	20 – 18
6AW–81950–00	18 – 4
6DA–81952–01	17 – 10
6AW–8195A–00	17 – 19
6DV–81960–00	18 – 1
6DA–81975–01	18 – 2
6EE–81994–40	16 – 28
6EE–81994–50	16 – 29
6AH–81996–00	24 – 34
6DA–82105–02	18 – 22
6P2–82113–00	17 – 27
6E5–82148–00	28 – 5
	28 – 8
66K–82149–00	28 – 24
6DA–82149–00	28 – 24
67F–82151–00	17 – 22
6P2–82151–00	17 – 18
67F–82151–10	17 – 23
67F–82151–40	17 – 20
67F–82151–50	17 – 21
6DV–82170–11	17 – 17
63P–82181–20	31 – 5
6CB–82310–00	19 – 5
6DA–82314–00	19 – 7
6A0–82317–01	16 – 15
6DA–82388–00	18 – 16
	21 – 9
6DA–82389–00	18 – 17
6D8–82389–01	19 – 1
6DA–82398–01	16 – 23
6Y8–82509–10	37 – 8
6Y8–82521–11	37 – 15
6DA–82553–00	20 – 6
6P2–82560–01	18 – 13
6BR–82563–01	20 – 9
6C5–8257V–00	17 – 31
68F–82582–00	21 – 5

PART NO.	REF. NO.
69J–82587–01	20 – 11
6E9–82588–00	18 – 14
6HP–82590–01	20 – 1
6DA–8259M–00	20 – 5
6CE–825E0–01	38 – 1
68F–82846–00	17 – 26
6X4–83383–00	37 – 5
6X4–83386–00	37 – 6
6DA–83614–00	20 – 13
63P–83614–01	20 – 12
6AW–83651–00	20 – 8
6AW–8366B–01	22 – 1
60V–8366D–00	22 – 2
6DV–8366G–00	26 – 15
67H–83672–02	29 – 3
68F–83688–10	9 – 15
6Y8–8454G–00	37 – 11
6P2–85075–00	19 – 10
68F–85119–00	17 – 8
	17 – 13
	27 – 6
60V–85516–00	10 – 21
68F–85516–01	17 – 6
	17 – 11
6CB–85544–00	17 – 25
689–85547–01	14 – 1
6DA–85548–01	17 – 14
6DA–85561–00	16 – 6
6DV–85564–00	27 – 3
6CB–85580–00	16 – 5
6CJ–85780–00	20 – 15
6CB–85790–00	20 – 7
6P2–85896–00	19 – 9
6HP–8591A–01	17 – 1
6DA–85991–00	17 – 3
6C5–86120–00	10 – 31
6Y8–86260–12	37 – 2
6AA–86261–22	37 – 3
6Y8–86267–00	37 – 1
K0F–A3233–00	4 – 14
K0F–A3741–00	8 – 5
K0F–A3742–00	8 – 6
K0F–A3743–00	8 – 3
K0F–A3751–00	8 – 8
K0F–A3751–10	8 – 8
K0F–A3751–20	8 – 8
K0F–A3751–30	8 – 8
K0F–A3751–40	8 – 8

PART NO.	REF. NO.
K0F–A3751–50	8 – 8
K0F–A3751–60	8 – 8
K0F–A3751–70	8 – 8
K0F–A3751–80	8 – 8
K0F–A3751–90	8 – 8
K0F–A3751–A0	8 – 8
K0F–A3751–B0	8 – 8
K0F–A3751–C0	8 – 8
K0F–A3751–D0	8 – 8
K0F–A3751–E0	8 – 8
K0F–A3751–F0	8 – 8
K0F–A3751–G0	8 – 8
K0F–A3751–H0	8 – 8
K0F–A3751–J0	8 – 8
K0F–A3751–K0	8 – 8
K0F–A3751–L0	8 – 8
K0F–A3751–M0	8 – 8
K0F–A3751–N0	8 – 8
K0F–A3751–P0	8 – 8
K0F–A3751–R0	8 – 8
K0F–A3751–S0	8 – 8
K0F–A3751–T0	8 – 8
K0F–A3753–00	8 – 8
K0F–A3753–10	8 – 8
K0F–A3753–20	8 – 8
K0F–A3753–30	8 – 8
K0F–A3753–40	8 – 8
K0F–A3753–50	8 – 8
K0F–A3753–60	8 – 8
K0F–A3753–70	8 – 8
6FA–W0001–01	40 – 1
63P–W0001–22	41 – 1
61A–W0078–A4	1 – 19
	41 – 21
6FA–W009A–03–9S	5 – 1
6DA–W009B–13–9S	3 – 1
6CB–W1165–10	4 – 9
63P–W4267–10	2 – 18
63P–W4267–20	2 – 18
6DA–W4624–00	8 – 17
6DA–W8145–00	16 – 1
6EK–W9010–00	16 – 2
90101–12065	28 – 40
	28 – 40
90101–12066	28 – 40
90101–14005	29 – 21
90105–06028	3 – 5
	6 – 7

PART NO.	REF. NO.
90105–06028	6 – 23
	6 – 31
90105–06037	6 – 46
90105–06054	10 – 3
90105–06151	5 – 21
	6 – 41
90105–06196	3 – 34
90105–06M07	5 – 14
	6 – 18
90105–06M08	10 – 11
	10 – 14
90105–08175	3 – 22
	5 – 20
90105–08M87	21 – 8
90105–10406	3 – 17
	3 – 21
90105–10M00	35 – 13
90105–14009	29 – 30
90105–14012	29 – 21
90111–06142	25 – 4
90111–06144	25 – 3
90111–08078	2 – 4
90119–06078	6 – 36
90119–06276	3 – 14
90119–06286	34 – 17
90119–06287	32 – 35
90119–06291	16 – 18
90119–06299	10 – 12
90119–06309	10 – 20
	10 – 35
	14 – 15
90119–06MA3	3 – 26
	6 – 14
90119–07001	5 – 7
90119–07234	5 – 8
90119–08020	9 – 14
90119–08182	32 – 2
90119–08187	24 – 21
90119–08189	32 – 5
90119–08191	34 – 35
	41 – 29
90119–08M66	3 – 18
90119–10007	32 – 21
90119–10024	29 – 29
90119–10050	8 – 14
90119–10054	28 – 18
90119–10058	29 – 27
90119–10072	35 – 7

PART NO.	REF. NO.
90119–10M07	8 – 19
90149–11001	5 – 19
90151–05M05	6 – 3
90152–05M08	35 – 10
90159–05059	29 – 2
	38 – 3
90159–06053	25 – 9
90159–06M28	25 – 3
90167–06M00	37 – 12
90169–05M00	18 – 12
90170–16M01	34 – 46
90171–18M04	35 – 17
90173–06001	25 – 7
90176–14002	29 – 23
90179–08003	21 – 3
90183–061A8	25 – 8
90185–05002	35 – 11
90185–06M07	27 – 15
90185–09M01	36 – 6
90185–14M00	29 – 34
90185–22M11	28 – 15
90201–06068	27 – 12
90201–06M30	37 – 13
90201–10060	28 – 17
90201–10M20	36 – 7
90201–11008	27 – 29
90201–12426	28 – 42
90201–13M01	28 – 41
90201–156J2	24 – 11
90201–15M58	29 – 20
90201–16M01	29 – 31
90201–16M55	29 – 19
90201–186F1	6 – 33
	40 – 14
90201–22M01	34 – 21
90201–26M59	28 – 14
90201–30M92	34 – 65
90201–35008	29 – 17
90201–38M60	29 – 9
90202–06015	27 – 20
90202–08M41	27 – 13
90202–16061	35 – 4
90202–32M19	29 – 18
90202–40M47	29 – 12
90206–15M18	24 – 12
90206–22M19	34 – 22
90249–06M19	28 – 31
90250–08M07	34 – 54

PART NO.	REF. NO.
90280–04M05	34 – 31
	41 – 30
90282–04M00	34 – 66
90338–25004	3 – 12
90340–08002	34 – 6
90340–14M06	5 – 9
	33 – 6
90340–18M09	6 – 32
90344–51019	5 – 4
90386–08008	27 – 5
90386–10001	27 – 25
	27 – 28
90386–10M16	28 – 29
90386–15M73	24 – 10
90386–22M98	28 – 20
	28 – 36
90386–25M31	28 – 13
90386–38M32	29 – 11
90387–05004	38 – 4
90387–06176	17 – 7
	17 – 12
	27 – 4
90387–06263	33 – 9
90387–06283	10 – 1
90387–06289	10 – 22
	10 – 34
	14 – 17
90387–06M43	25 – 11
90387–06M69	16 – 17
90387–07028	25 – 6
90387–08M37	24 – 20
90387–08M45	2 – 7
90387–10094	2 – 5
90387–10M05	28 – 32
90387–10M61	36 – 3
90387–11005	5 – 18
90387–14004	29 – 38
90430–06M03	5 – 15
	6 – 19
90430–08003	1 – 16
	34 – 8
	41 – 11
90430–14115	5 – 10
	40 – 2
90430–14M09	1 – 7
	33 – 7
	41 – 3
90445–07044	32 – 33

PART NO.	REF. NO.
90445–07045	32 – 33
90445–09008	7 – 4
90445–09120	11 – 3
90445–10056	11 – 8
90445–10057	7 – 14
90445–23002	35 – 2
90447–07008	22 – 5
90462–12013	26 – 19
90464–07M41	11 – 2
90464–09008	18 – 21
90464–09020	7 – 10
90464–09130	10 – 26
	16 – 21
	16 – 25
90464–09142	7 – 9
90464–09M21	7 – 5
90464–09M31	7 – 12
90464–10011	11 – 17
90464–11121	10 – 24
90464–12002	16 – 4
90464–12010	7 – 8
	13 – 3
90464–12183	9 – 10
	9 – 22
	18 – 8
90464–13013	13 – 19
	22 – 6
90464–13249	18 – 20
	19 – 4
	24 – 27
	26 – 13
90464–13260	13 – 18
90464–15007	13 – 5
90464–16001	11 – 12
	11 – 26
	11 – 27
90464–16003	13 – 4
90464–18004	11 – 25
	13 – 17
	26 – 18
90464–18246	18 – 10
	26 – 17
90464–20181	6 – 35
	9 – 21
	13 – 1
	16 – 22
	17 – 15
	18 – 19

PART NO.	REF. NO.
90464–20181	19 – 3
	21 – 10
90464–20258	24 – 31
90464–21256	26 – 9
90464–26001	20 – 16
90464–28003	20 – 17
90464–32002	18 – 9
90464–99004	9 – 8
90465–08M63	13 – 6
	28 – 22
90465–08M83	7 – 16
90465–11M10	7 – 7
	10 – 25
	11 – 4
	11 – 5
	11 – 9
	13 – 14
	13 – 16
	14 – 5
	14 – 20
	22 – 4
	26 – 3
	26 – 10
	27 – 2
	28 – 16
	29 – 5
	32 – 32
	37 – 10
	38 – 5
	39 – 4
90465–11M59	6 – 24
	6 – 48
	20 – 4
90465–13M18	38 – 6
90465–13M97	16 – 9
90467–09M09	11 – 10
90467–120A7	13 – 9
90467–140A9	13 – 10
90467–141A2	13 – 13
90468–18008	27 – 14
	27 – 19
90468–180A0	27 – 30
90480–12314	10 – 2
	16 – 14
	19 – 8
90480–13163	24 – 28
90480–13M24	25 – 10
90480–14031	10 – 33
90480–15013	14 – 16
90480–16009	25 – 5
90480–16025	16 – 13
90480–20M05	6 – 10
90480–22M81	24 – 19
90501–16M11	6 – 9
90501–16M37	34 – 50
90506–16003	28 – 34
90506–18025	8 – 20
90506–22001	24 – 16
90560–12M01	36 – 4
91312–04020	30 – 57
91312–05035	30 – 63
91380–06025	30 – 67
91490–40030	35 – 18
91609–16010	30 – 11
91690–30020	28 – 33
91690–40010	3 – 10
	3 – 27
91809–08006	5 – 6
91814–18002	3 – 3
92903–08100	18 – 25
92990–06100	2 – 10
92990–08600	2 – 6
92990–18200	35 – 16
92995–05100	9 – 17
92995–05600	9 – 18
92995–14600	29 – 24
	29 – 36
93101–28M16	34 – 37
	41 – 17
93101–30M17	34 – 62
	41 – 19
93102–38008	8 – 16
	40 – 19
93102–85008	4 – 4
	40 – 18
93106–09014	34 – 16
	41 – 13
93106–19001	30 – 5
93210–04279	37 – 9
93210–064A5	30 – 40
	30 – 50
93210–07003	34 – 13
	41 – 10
93210–07N51	30 – 47
93210–08001	3 – 30
	40 – 17
93210–09165	27 – 24
	30 – 16
93210–11N52	30 – 21
93210–12327	30 – 35
93210–12648	3 – 16
	40 – 9
93210–12N52	30 – 38
93210–13M63	6 – 4
	24 – 29
	40 – 10
93210–16275	36 – 9
93210–19MJ3	33 – 21
	40 – 23
93210–24M79	6 – 43
	40 – 24
93210–25552	3 – 11
	33 – 18
	40 – 6
	40 – 21
93210–25647	3 – 13
	40 – 7
93210–29375	30 – 28
93210–357A3	6 – 45
	40 – 25
93210–37160	34 – 27
	41 – 15
	41 – 24
93210–37MH7	29 – 10
93210–55M14	34 – 41
	41 – 18
93210–58144	34 – 15
	41 – 12
93210–68N50	30 – 14
93210–86M38	34 – 26
	41 – 14
	41 – 23
93210–97M55	34 – 63
	41 – 20
93306–209U0	34 – 58
93311–928U5	34 – 3
93315–43061	34 – 61
93317–330U2	34 – 38
93332–000V3	34 – 4
93341–930V2	34 – 40
93410–22M11	28 – 37
93410–37M04	29 – 14
93420–36M01	32 – 24
93501–08001	30 – 49
93501–08001	30 – 58
93503–16003	30 – 43
	34 – 53
93505–32038	30 – 64
93507–32009	34 – 51
93511–32017	34 – 52
93604–09066	27 – 22
93604–10011	30 – 56
93605–10108	8 – 10
	8 – 12
93606–12019	4 – 3
	5 – 5
	34 – 34
	41 – 28
93606–19M23	32 – 15
93608–16M16	32 – 4
	32 – 22
	33 – 4
	35 – 5
93700–06002	28 – 10
	28 – 23
94702–00400	1 – 18
	5 – 25
95022–06035	16 – 10
95333–08600	18 – 24
95380–06600	2 – 11
	10 – 32
	25 – 4
95380–12600	28 – 43
95604–14200	29 – 23
95780–06300	37 – 14
95780–08300	2 – 8
95780–10300	29 – 7
95812–06025	33 – 11
95D75–06025	9 – 4
	9 – 6
95D75–08030	27 – 8
95D75–08035	17 – 4
95D95–06010	13 – 7
	28 – 38
	28 – 39
95D95–06012	7 – 17
	9 – 20
	10 – 19
	14 – 18
	18 – 15
	19 – 2
	20 – 14
95D95–06012	24 – 18
	26 – 14
	26 – 16
	26 – 20
95D95–06014	24 – 4
95D95–06016	10 – 29
	16 – 20
	16 – 24
	17 – 9
	18 – 18
	21 – 11
	22 – 3
	33 – 22
95D95–06020	10 – 5
	17 – 2
95D95–06025	14 – 7
	19 – 6
95D95–06030	5 – 24
	16 – 11
95D95–06040	26 – 24
95D95–06065	26 – 22
95D95–08012	24 – 15
95D95–08016	18 – 23
95D95–08025	5 – 16
97513–08545	21 – 2
97595–05520	16 – 8
97602–04316	31 – 9
97780–50620	17 – 29
97780–60520	26 – 11
97780–60620	17 – 16
	17 – 32
	37 – 7
97880–06035	37 – 12
97885–05016	9 – 16
97980–06216	32 – 26
	37 – 4
97985–04308	20 – 3
97985–06212	28 – 9
97985–06216	29 – 4
97D95–06010	28 – 26
97D95–06012	32 – 29
97E75–06516	8 – 22
97E75–06520	27 – 17
	27 – 27
97E75–06540	33 – 17
97E75–08535	32 – 14
	33 – 3
97E75–08540	6 – 20
97E75–08560	9 – 2
	32 – 11
97E75–10535	32 – 6
97E75–10545	32 – 3
97E95–06510	28 – 6
97E95–06516	20 – 2
	21 – 1
	38 – 2
97E95–06520	18 – 7
	19 – 11
97E95–06530	28 – 4
97E95–06535	18 – 3
97E95–06550	27 – 26
97E95–06610	18 – 6
97E95–08520	28 – 12
97E95–08525	34 – 43
97E95–10645	35 – 6
98507–04008	12 – 34
98780–04016	3 – 9
	3 – 28
99001–08600	34 – 19
99530–08012	16 – 7
99590–10114	21 – 7