YAMAHA

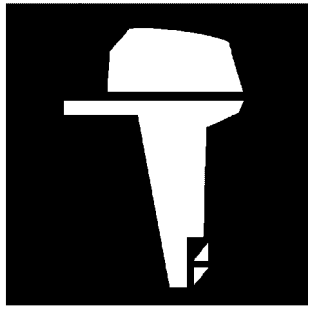

PARTS CATALOGUE

LF150CA-2021 (6HR5)

YAMAHA GENUINE Parts & Accessories

1V6HR-100EA

( )

2022/2/21

NEWS NO.	DATE	COMMENT
PE0-OM-220003	Jan.,28,2022	MOD:BOTTOM COWLING 2 LIST REVISION

LF150CA
PARTS CATALOGUE
©2021 by Yamaha Motor Co., Ltd.
1st edition, February 2021
All rights reserved.
Any reprinting or unauthorized use
without the written permission of
Yamaha Motor Co., Ltd.
is expressly prohibited.
Printed in Japan.

FOREWORD

This Parts Catalogue is related to the parts for the model(s) on the cover page. When you are ordering replacement parts, please refer to this Parts Catalogue and quote both part numbers and part names correctly.

1. Modifications or additions which have been made after the issue of the Parts Catalogue will be announced in the Parts News.
   It is advisable that you make the necessary corrections to the Parts Catalogue according to the Parts News.

2. Abbreviations
   The following abbreviations are used in this Parts Catalogue.
   "UR" Use specified parts number.
   "UN" Use as many as needed.
   "AP" Alternate Parts
   "LM" Locally Made (Parts need to be ordered locally)
   "F#" Frame No. (Applicable machine No.)
   "O/S" Over Size

3. The number of components for assembly
   - Parts, which are to be supplied in an assembly, are listed with a dot (.) in front of the part name as shown below.
   - The numeral appearing to the right of each component part indicates the quantity of parts for each assembly unit.

PART NO.	DESCRIPTION	Q'TY	REMARKS
2F5–83310–60	FRONT FLASHER LIGHT ASSY	2	
115–83311–60	.BULB (6V–18W)	1	

4. Applicable colours of graphics are represented in the "REMARKS" as shown below.

PART NO.	DESCRIPTION	Q'TY	REMARKS
2N4–24110–00–X5	FUEL TANK COMP.	2	MXR
3J1–24240–10	.GRAPHIC, FUEL TANK	1	FOR MXR

5. Note that the illustrations for reference in finding parts numbers are not to be used for assembling. When assembling, please use the applicable service manual.

6. The asterisk (*) before a reference number indicates modified items after the first edition.

7. Applicable Serial No.
   Engine Serial No.

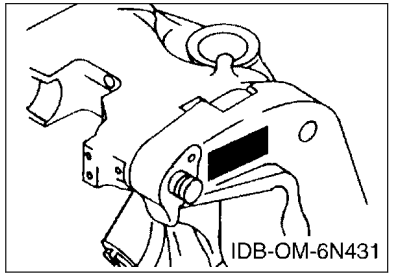

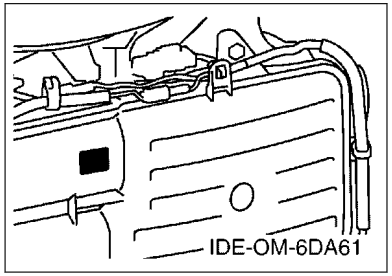

8. Applicable Engine Starting Serial No.

Model	Serial No.	Model	Serial No.
LF150CA	6HR-1003077		

9. Applicable Colour Code

Abbreviation	Colour Name	Colour Code
DBN1	DARK BLUISH GRAY 1	008D

10. Quantity Column Information

Column No.	Name Of Q'ty Column	Applicable Model
1	XCA	LF150XCA
2	XCA2	LF150XCA2

CONTENTS

SCHEDULED SERVICE PARTS.....1
TOP COWLING.....2
CYLINDER & CRANKCASE 1.....3
CRANKSHAFT & PISTON.....5
CYLINDER & CRANKCASE 2.....6
CYLINDER & CRANKCASE 3.....7
CYLINDER & CRANKCASE 4.....9
VALVE.....10
INTAKE 1.....13
INTAKE 2.....14
INTAKE 3.....16
FUEL INJECTION PUMP 1.....17
FUEL INJECTION PUMP 2.....19
FUEL 1.....20
FUEL 2.....21
GENERATOR.....22
ELECTRICAL 1.....24
ELECTRICAL 2.....26
ELECTRICAL 3.....27
ELECTRICAL 4.....28
ELECTRICAL 5.....29
STARTING MOTOR.....30
BOTTOM COWLING 1.....31
BOTTOM COWLING 2.....33
BOTTOM COWLING 3.....34
CONTROL.....35
BRACKET 1.....37
BRACKET 2.....39
POWER TRIM & TILT ASSY 1.....41
POWER TRIM & TILT ASSY 2.....44
UPPER CASING.....45
OIL PAN.....47
LOWER CASING & DRIVE 1.....48
LOWER CASING & DRIVE 2.....52
STEERING GUIDE.....53
OPTIONAL PARTS 1.....54
OPTIONAL PARTS 2.....55
OPTIONAL PARTS 3.....56
REPAIR KIT 1.....57
REPAIR KIT 2.....58

INDEX

NUMERICAL INDEX.....60

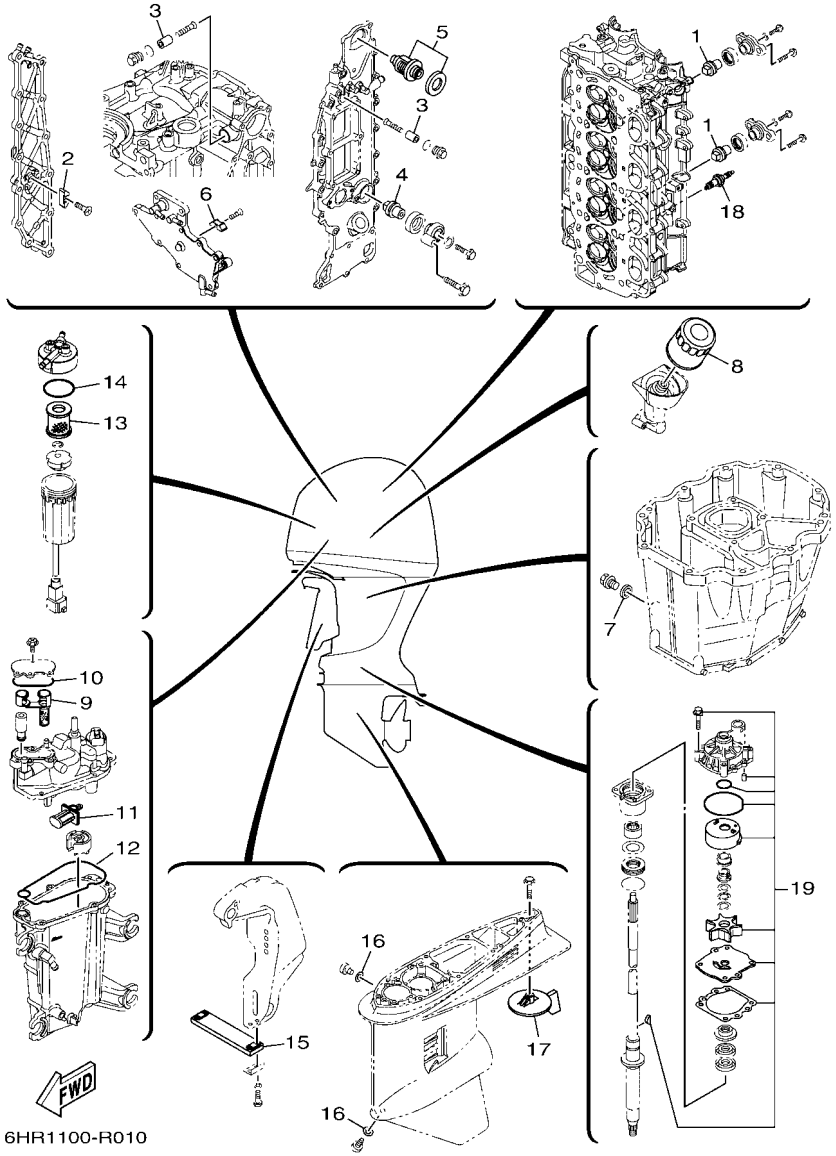

FIG. 1 SCHEDULED SERVICE PARTS

REF. NO.	PART NO.	DESCRIPTION	XCA	XCA2				REMARKS
1	67F–11325–01	ANODE	2	2				
2	6E5–11325–00	ANODE	1	1				
3	68T–11325–00	ANODE	2	2				
4	67F–11325–01	ANODE	1	1				
5	6DA–12411–01	THERMOSTAT	1	1				
6	6E5–11325–00	ANODE	1	1				
7	90430–14M09	GASKET	1	1				
8	69J–13440–04	ELEMENT ASSY, OIL CLEANER	1	1				
9	6CB–24501–01	FILTER, FUEL	1	1				
10	6CB–13016–00	O-RING	1	1				
11	63P–13915–00	FILTER	1	1				
12	6CB–14984–00	GASKET, FLOAT CHAMBER	1	1				
13	6P3–24563–01	ELEMENT, FILTER	1	1				
14	6P3–24564–00	GASKET	1	1				
15	6AW–45251–00	ANODE	1	1				
16	90430–08003	GASKET	2	2				
17	6K1–45371–02	TAB-TRIM	1	1				
18	94702–00400	PLUG, SPARK (NGK LFR6A-11)	4	4				
19	61A–W0078–A4	WATER PUMP REPAIR KIT	1	1				

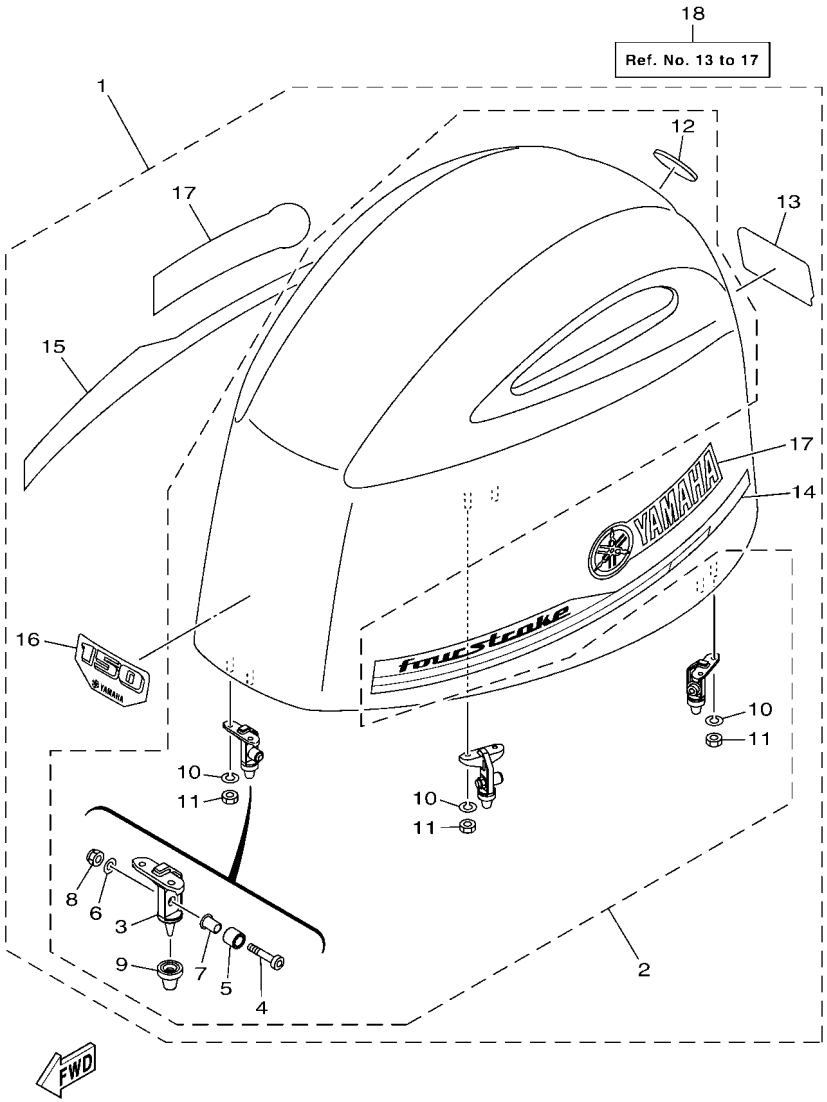

6HP1100-R020

FIG. 2 TOP COWLING

REF. NO.	PART NO.	DESCRIPTION	XCA	XCA2				REMARKS
1	6HP–42610–01	TOP COWLING ASSY	1					
	6HP–42610–10–CE	TOP COWLING ASSY		1				WHITE
2	6DA–4261A–02	.TOP COWLING W/O GRAPHICS	1					
	6DA–4261A–02–CE	.TOP COWLING W/O GRAPHICS		1				WHITE
3	6CB–42647–A0	..HOLDER, CLAMP BAND	3	3				
4	90111–08078	..BOLT,HEX. SOCKET BUTTON	3	3				
5	90387–10094	..COLLAR	3	3				
6	92990–08600	..WASHER, PLATE	3	3				
7	90387–08M45	..COLLAR	3	3				
8	95780–08300	..NUT, FLANGE	3	3				
9	6AW–42663–01	..DAMPER 2	3	3				
10	92990–06100	..WASHER, SPRING	6	6				
11	95380–06600	..NUT, HEXAGON	6	6				
12	6DA–42697–00	..TUNING FORK MARK	1	1				
13	63P–42678–60	.GRAPHIC, REAR	1					
	63P–42678–70	.GRAPHIC, REAR		1				FOR WHITE COWLING
14	6DA–42675–00	.GRAPHIC, SIDE 1	1					
	6DA–42675–10	.GRAPHIC, SIDE 1		1				FOR WHITE COWLING
15	6DA–42676–00	.GRAPHIC, SIDE 2	1					
	6DA–42676–10	.GRAPHIC, SIDE 2		1				FOR WHITE COWLING
16	63P–42677–60	.GRAPHIC, FRONT	1					
	63P–42677–70	.GRAPHIC, FRONT		1				FOR WHITE COWLING
17	63P–42681–20	.MARK, COWLING	2					
	63P–42681–30	.MARK, COWLING		2				FOR WHITE COWLING
18	63P–W4267–10	GRAPHIC SET, TOP COWLING	1					AP FOR USA
	63P–W4267–20	GRAPHIC SET, TOP COWLING		1				AP FOR USA(WHITE)

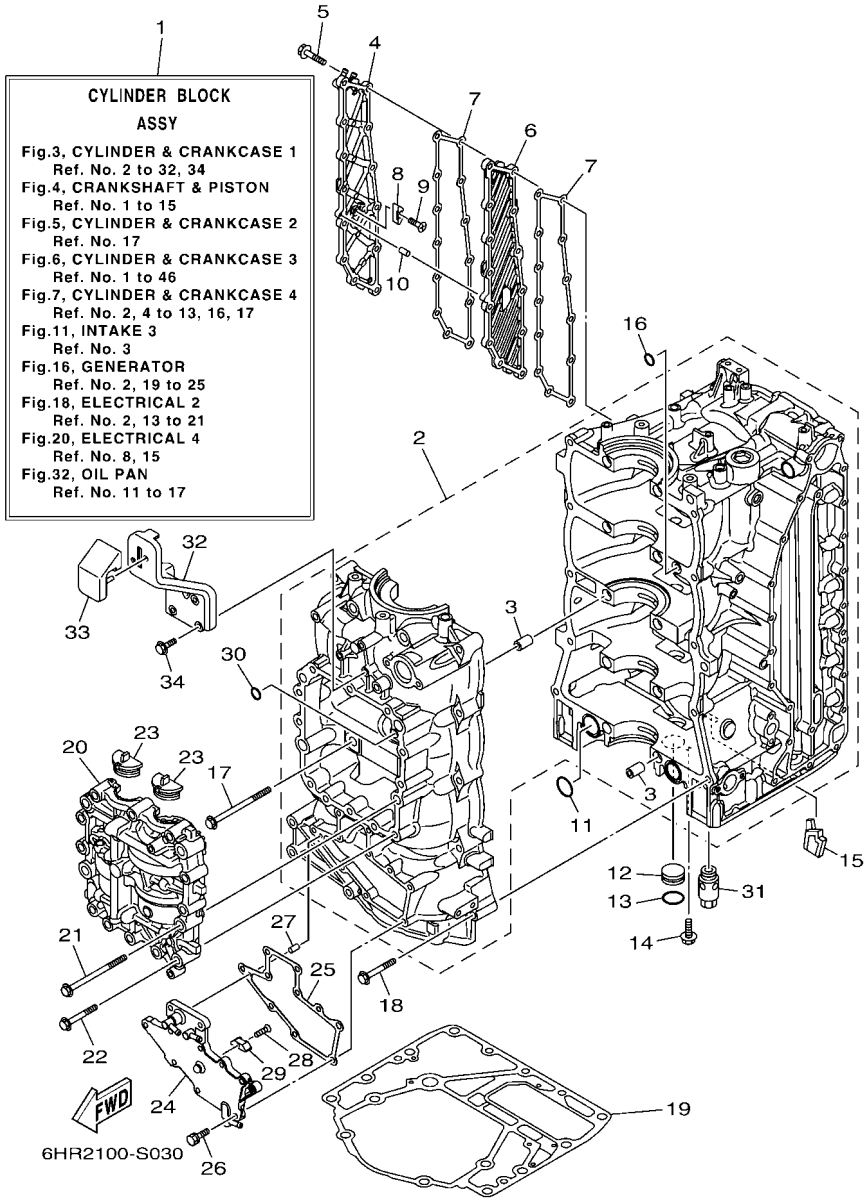

FIG. 3 CYLINDER & CRANKCASE 1

REF. NO.	PART NO.	DESCRIPTION	XCA	XCA2				REMARKS
1	6DA–W009B–13–9S	CYLINDER BLOCK ASSY	1	1				
2	6DA–15109–01–9S	CRANKCASE ASSY	1	1				
3	91814–18002	.PIN, DOWEL	10	10				
4	6DA–15414–00–9S	COVER 1	1	1				
5	90105–06028	BOLT, FLANGE	13	13				
6	6DA–15423–00–9S	COVER 2	1	1				
7	6DA–15353–01	GASKET, DRAIN	2	2				
8	6E5–11325–00	ANODE	1	1				
9	98780–04016	SCREW, FLAT HEAD	1	1				
10	91690–40010	PIN, SPRING	1	1				
11	93210–25552	O-RING	2	2				
12	90338–25004	PLUG	1	1				
13	93210–25647	O-RING	1	1				
14	90119–06276	BOLT, WITH WASHER	1	1				
15	6DA–14664–01	GROMMET, WATER SHUT	1	1				
16	93210–12648	O-RING	1	1				
17	90105–10406	BOLT, FLANGE	10	10				
18	90119–08M66	BOLT, WITH WASHER	10	10				
19	63P–11351–03	GASKET, CYLINDER	1	1				
20	6DA–11500–00	BALANCER ASSY	1	1				
21	90105–10406	BOLT, FLANGE	4	4				
22	90105–08175	BOLT, FLANGE	12	12				
23	63P–11512–00	SEAL, CRANK COVER	2	2				
24	6DA–15411–00–9S	COVER, CRANKCASE 1	1	1				
25	6DA–15451–01	GASKET, CRANKCASE COVER 1	1	1				
26	90119–06MA3	BOLT, WITH WASHER	10	10				
27	91690–40010	PIN, SPRING	1	1				

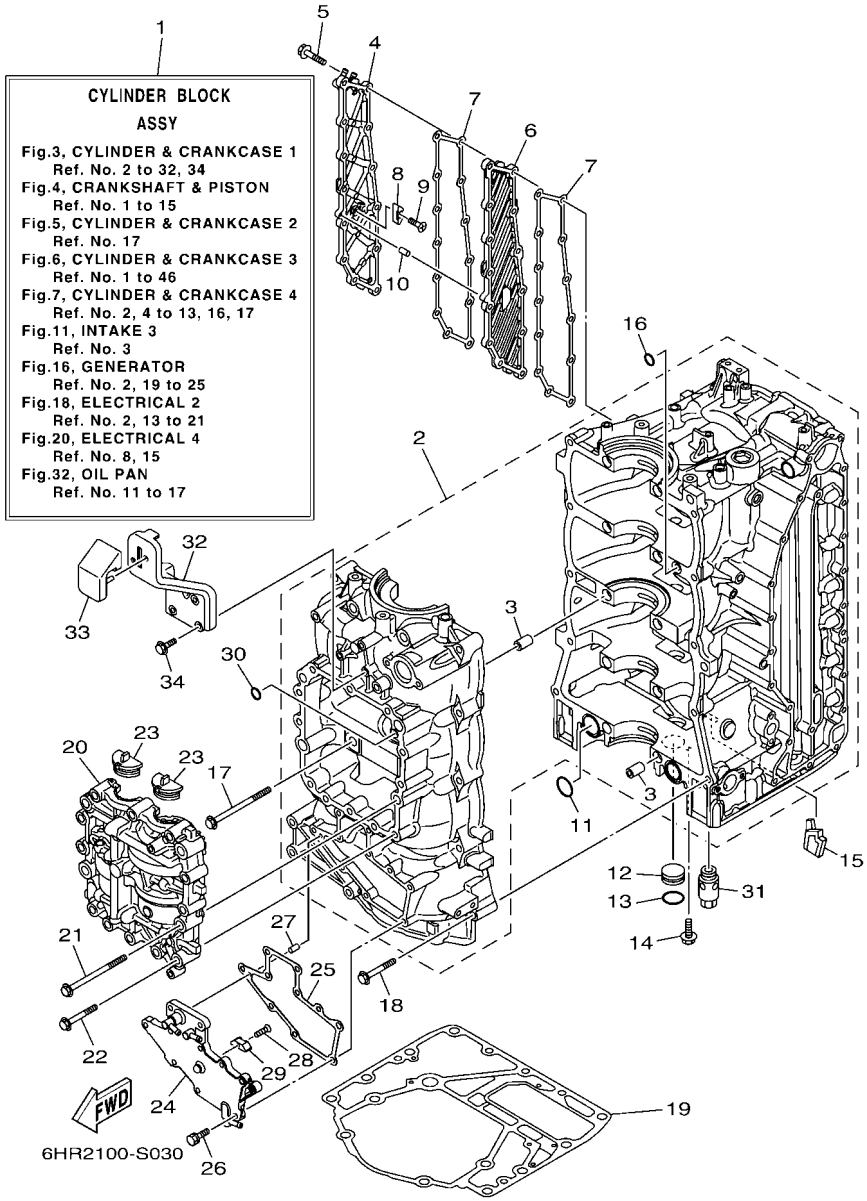

FIG. 3 CYLINDER & CRANKCASE 1

REF. NO.	PART NO.	DESCRIPTION	XCA	XCA2				REMARKS
28	98780–04016	SCREW, FLAT HEAD	1	1				
29	6E5–11325–00	ANODE	1	1				
30	93210–08001	O-RING	1	1				
31	63P–13490–00	RELIEF VALVE ASSY	1	1				
32	6DA–42744–00	STAY	1	1				
33	6DA–42662–01	DAMPER	1	1				
34	90105–06196	BOLT, FLANGE	3	3				

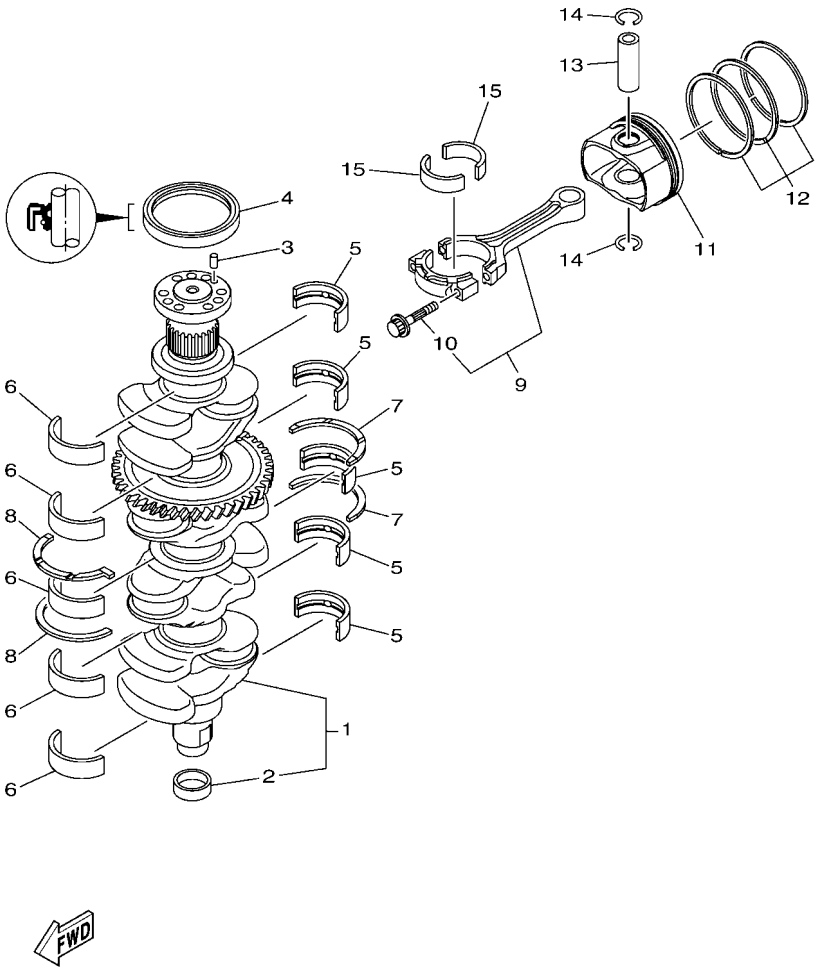

6EH8100-U040

FIG. 4 CRANKSHAFT & PISTON

REF. NO.	PART NO.	DESCRIPTION	XCA	XCA2				REMARKS
1	6DA–11410–00	CRANKSHAFT	1	1				
2	6CB–11478–00	.COLLAR	1	1				
3	93606–12019	PIN, DOWEL	1	1				
4	93102–85008	OIL SEAL	1	1				
5	6DA–11416–00	PLANE BEARING, CRANKSHAFT 1	5	5				UR YELLOW
	6DA–11416–10	PLANE BEARING, CRANKSHAFT 1	5	5				UR GREEN
	6DA–11416–20	PLANE BEARING, CRANKSHAFT 1	5	5				UR BLUE
6	6DA–11417–00	PLANE BEARING, CRANKSHAFT 2	5	5				UR YELLOW
	6DA–11417–10	PLANE BEARING, CRANKSHAFT 2	5	5				UR GREEN
	6DA–11417–20	PLANE BEARING, CRANKSHAFT 2	5	5				UR BLUE
7	6DA–11426–00	BEARING, THRUST 1	2	2				
8	6DA–11427–00	BEARING, THRUST 2	2	2				
9	6CB–W1165–10	CONNECTING ROD ASSY	4	4				
10	63P–11654–10	.BOLT, CONNECTING ROD	2	2				
11	6DA–11631–20–94	PISTON (STD)	4	4				
12	6CB–11603–00	PISTON RING SET (STD)	4	4				
13	6CB–11633–00	PIN, PISTON	4	4				
14	K0F–A3233–00	RING,HOLE SNAP	8	8				
15	6JD–11656–00	PLANE BEARING, CONNECTING ROD	8	8				UR BLACK
	6JD–11656–10	PLANE BEARING, CONNECTING ROD	8	8				UR PINK
	6JD–11656–20	PLANE BEARING, CONNECTING ROD	8	8				UR RED

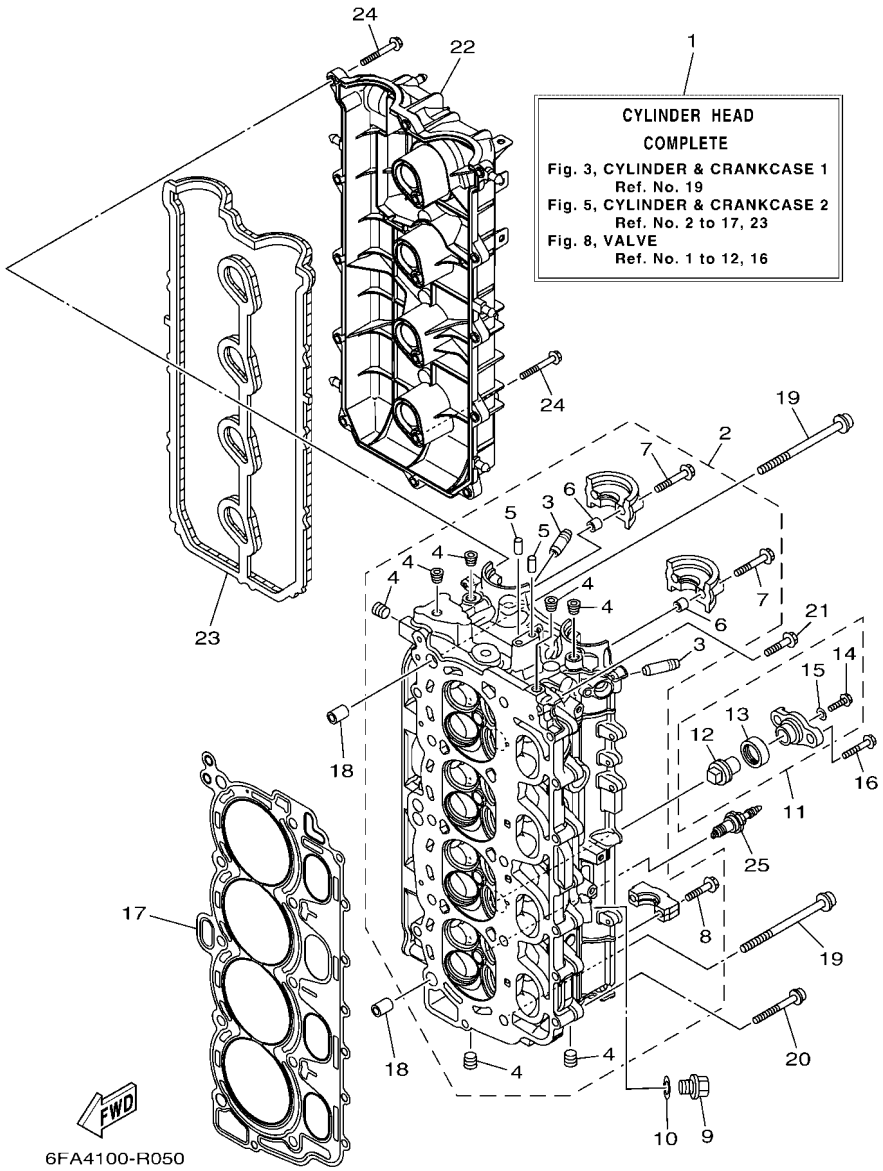

FIG. 5 CYLINDER & CRANKCASE 2

REF. NO.	PART NO.	DESCRIPTION	XCA	XCA2				REMARKS
1	6FA–W009A–03–9S	CYLINDER HEAD COMPLETE	1	1				
2	6FA–11110–02–9S	CYLINDER HEAD ASSY	1	1				
3	6DA–11133–10	.GUIDE, VALVE 1	16	16				
4	90344–51019	.PLUG, TAPER SCREW	7	7				
5	93606–12019	.PIN, DOWEL	2	2				
6	91809–08006	.PIN, DOWEL	4	4				
7	90119–07001	.BOLT, WITH WASHER	4	4				
8	90119–07234	.BOLT, WITH WASHER	16	16				
9	90340–14M06	PLUG, STRAIGHT SCREW	1	1				
10	90430–14115	GASKET	1	1				
11	67F–11301–01	ANODE COVER ASSY	2	2				
12	67F–11325–01	.ANODE	1	1				
13	67F–11328–01	.GROMMET, ANODE	1	1				
14	90105–06M07	.BOLT, FLANGE	1	1				
15	90430–06M03	.GASKET	1	1				
16	95D95–08025	BOLT, FLANGE DEEP RECESS	4	4				
17	6DA–11181–00	GASKET, CYLINDER HEAD 1	1	1				
18	90387–11005	COLLAR	2	2				
19	90149–11001	SCREW	10	10				
20	90105–08175	BOLT, FLANGE	8	8				
21	90105–06151	BOLT, FLANGE	1	1				
22	6DA–11191–00	COVER, CYLINDER HEAD 1	1	1				
23	6DA–11193–00	GASKET, HEAD COVER 1	1	1				
24	95D95–06030	BOLT, FLANGE DEEP RECESS	16	16				
25	94702–00400	PLUG, SPARK (NGK LFR6A-11)	4	4				

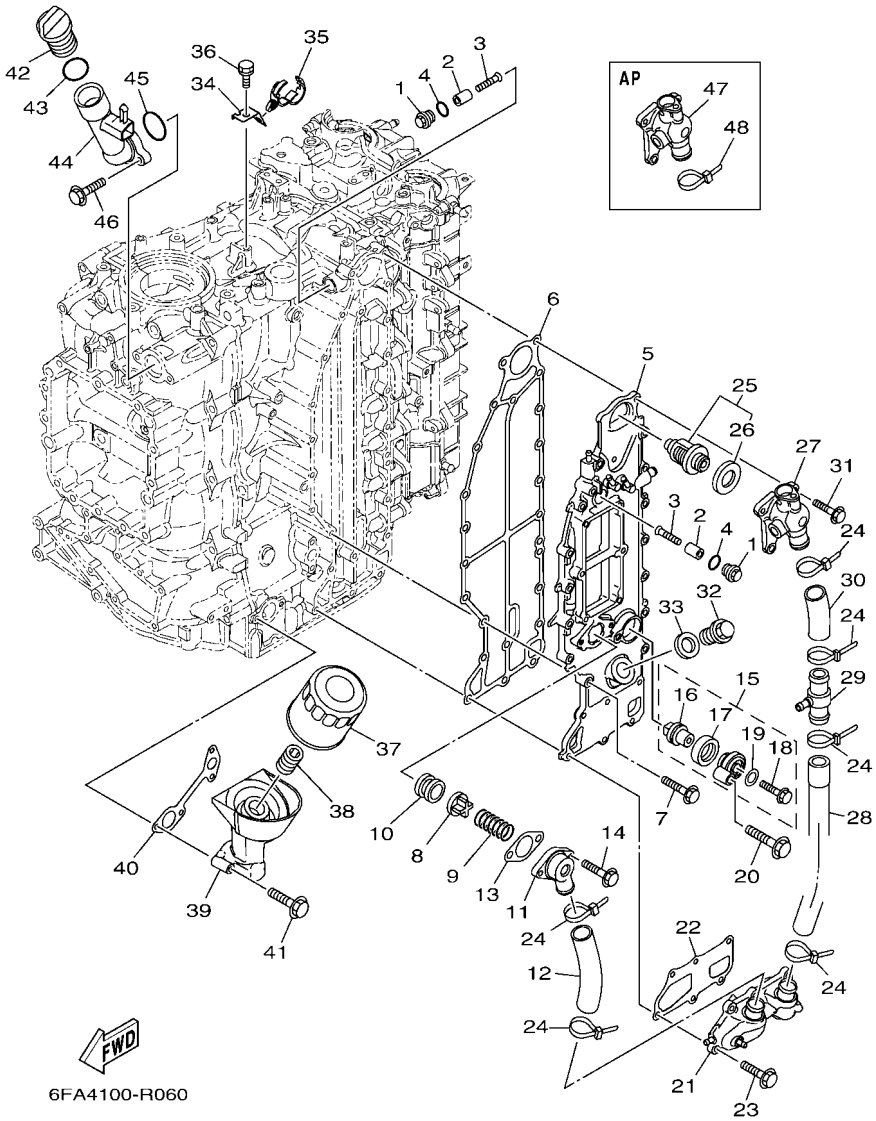

FIG. 6 CYLINDER & CRANKCASE 3

REF. NO.	PART NO.	DESCRIPTION	XCA	XCA2				REMARKS
1	6G8–11197–A0	PLUG, BLIND	2	2				
2	68T–11325–00	ANODE	2	2				
3	90151–05M05	SCREW, COUNTERSUNK	2	2				
4	93210–13M63	O-RING	2	2				
5	6DA–41113–00–9S	OUTER COVER, EXHAUST	1	1				
6	6DA–41114–01	GASKET, EXHAUST OUTER COVER	1	1				
7	90105–06028	BOLT, FLANGE	14	14				
8	60H–12416–00	VALVE, PRESSURE CONTROL	1	1				
9	90501–16M11	SPRING, COMPRESSION	1	1				
10	90480–20M05	GROMMET	1	1				
11	6G5–11372–00	COVER, BYPASS 2	1	1				
12	6DA–1243A–00	HOSE 1	1	1				
13	60V–11382–A0	GASKET 2	1	1				
14	90119–06MA3	BOLT, WITH WASHER	2	2				
15	69J–11301–01	ANODE COVER ASSY	1	1				
16	67F–11325–01	.ANODE	1	1				
17	67F–11328–01	.GROMMET, ANODE	1	1				
18	90105–06M07	.BOLT, FLANGE	1	1				
19	90430–06M03	.GASKET	1	1				
20	97E75–08540	BOLT, HEXAGON W/W DEEP RECESS	1	1				
21	6DA–12527–00–9S	COVER, WATER BY-PASS	1	1				
22	6DA–11381–01	GASKET 1	1	1				
23	90105–06028	BOLT, FLANGE	6	6				
24	90465–11M59	CLAMP	6	6				
25	6DA–12411–01	THERMOSTAT	1	1				
26	6AW–12412–00	.SEAL, THERMOSTAT	1	1				
27	6DA–12413–A0–9S	COVER, THERMOSTAT	1	1				

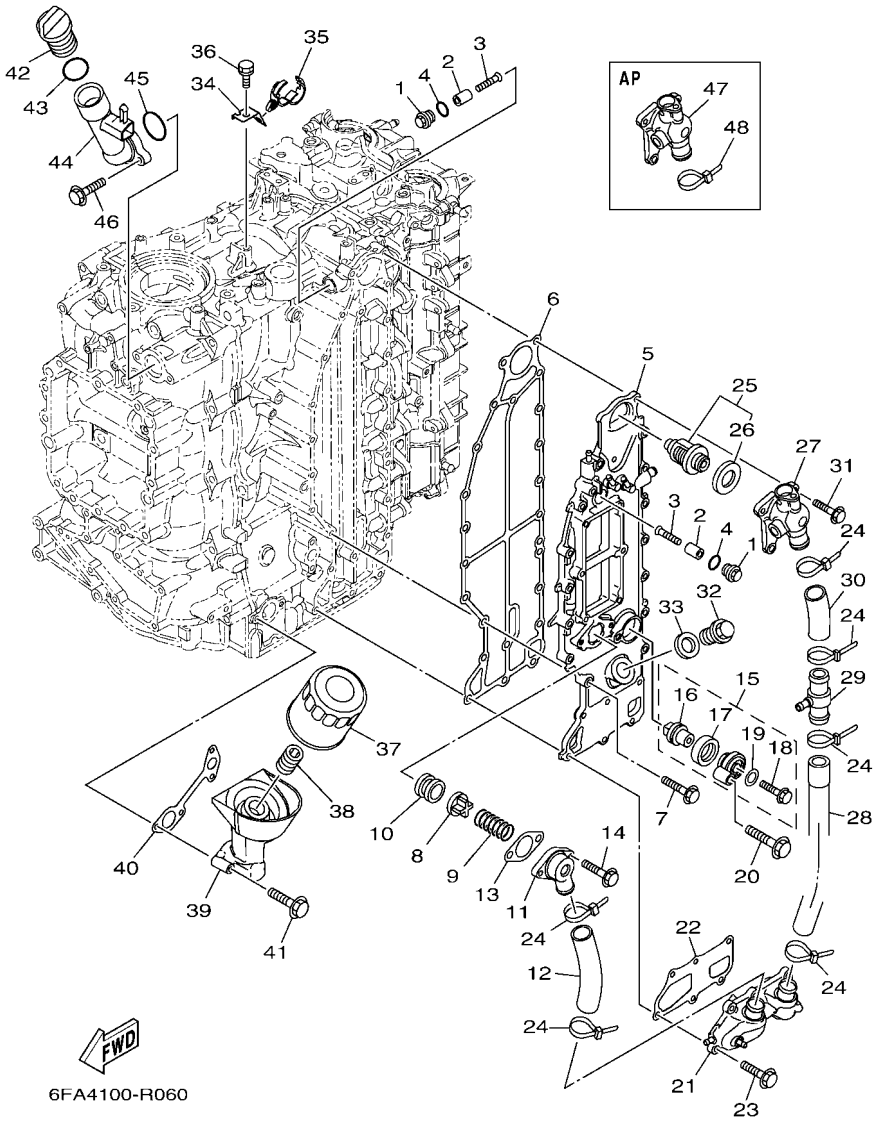

FIG. 6 CYLINDER & CRANKCASE 3

REF. NO.	PART NO.	DESCRIPTION	XCA	XCA2				REMARKS
28	6DA–1243E–00	HOSE 2	1	1				
29	6CE–24378–00	PIPE, JOINT 3	1	1				
30	6DA–1244H–00	HOSE 5	1	1				
31	90105–06028	BOLT, FLANGE	3	3				
32	90340–18M09	PLUG, STRAIGHT SCREW	1	1				
33	90201–186F1	WASHER, PLATE	1	1				
34	6DA–12491–00	CLAMP 1	1	1				
35	90464–20181	CLAMP	1	1				
36	90119–06078	BOLT, WITH WASHER	1	1				
37	69J–13440–04	ELEMENT ASSY, OIL CLEANER	1	1				
38	6S5–12858–00	BOLT, UNION	1	1				
39	6DA–13446–01	CONNECTOR	1	1				
40	6DA–13475–00	GASKET	1	1				
41	90105–06151	BOLT, FLANGE	4	4				
42	6G8–15363–00	PLUG, OIL	1	1				
43	93210–24M79	O-RING	1	1				
44	6DA–15319–00	JOINT	1	1				
45	93210–357A3	O-RING	1	1				
46	90105–06037	BOLT, FLANGE	2	2				
47	6DA–1241B–A0–9S	COVER, THERMOSTAT 2	1	1				AP WATER TEMP SENSOR
48	90465–11M59	CLAMP	1	1				AP WATER TEMP SENSOR

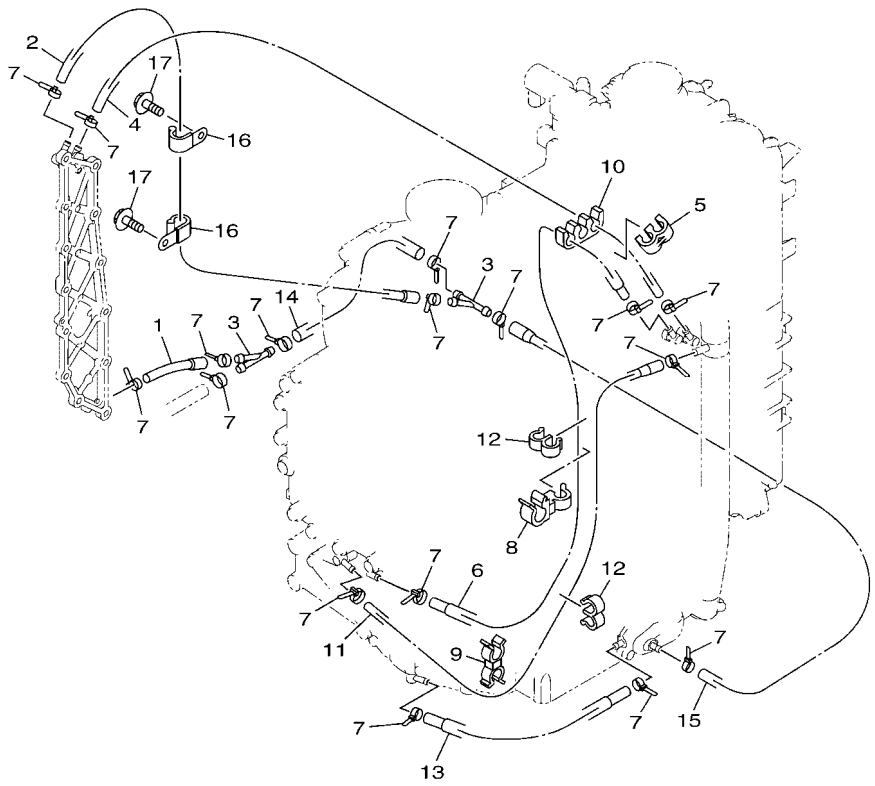

6EH5100-R070

FIG. 7 CYLINDER & CRANKCASE 4

REF. NO.	PART NO.	DESCRIPTION	XCA	XCA2				REMARKS
1	6DA–12576–00	HOSE 1	1	1				
2	6DA–12589–00	HOSE 6	1	1				
3	6CE–24377–00	PIPE, JOINT 2	2	2				
4	90445–09008	HOSE (L470)	1	1				
5	90464–09M21	CLAMP	1	1				
6	6DA–12578–00	HOSE 3	1	1				
7	90465–11M10	CLAMP	17	17				
8	90464–12010	CLAMP	1	1				
9	90464–09142	CLAMP	1	1				
10	90464–09020	CLAMP	1	1				
11	6DA–12579–00	HOSE 4	1	1				
12	90464–09M31	CLAMP	2	2				
13	6DA–12552–00	HOSE 8	1	1				
14	90445–10057	HOSE (L170)	1	1				
15	6DA–12589–00	HOSE 6	1	1				
16	90465–08M83	CLAMP	2	2				
17	95D95–06012	BOLT, FLANGE DEEP RECESS	2	2				

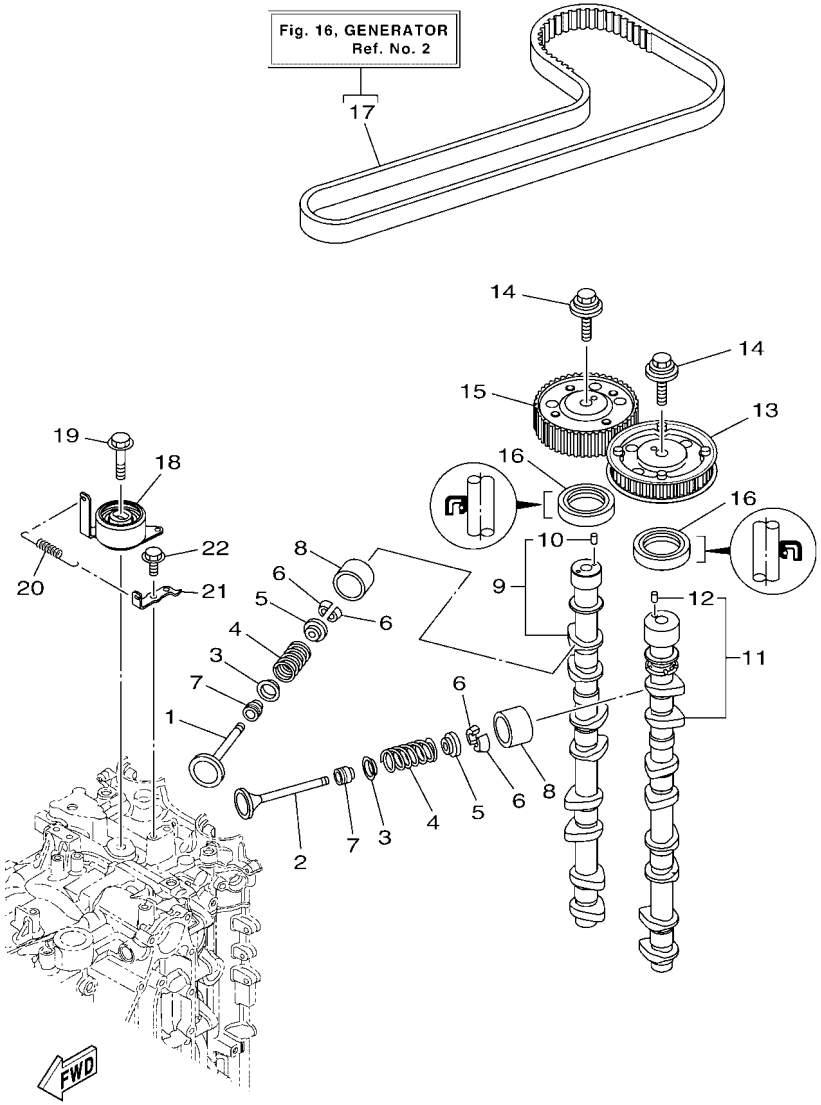

FIG. 8 VALVE

REF. NO.	PART NO.	DESCRIPTION	XCA	XCA2				REMARKS
1	6CB–12111–00	VALVE, INTAKE	8	8				
2	6DA–12121–00	VALVE, EXHAUST	8	8				
3	K0F–A3743–00	SEAT, VALVE SPRING	16	16				
4	6CB–12113–00	SPRING, VALVE INNER	16	16				
5	K0F–A3741–00	RETAINER, VALVE SPRING	16	16				
6	K0F–A3742–00	LOCK, VALVE SPRING RETAINER	32	32				
7	51Y–12119–00	SEAL, VALVE STEM	16	16				
8	K0F–A3751–00	LIFTER, VALVE (3.000)	16	16				UR
	K0F–A3751–10	LIFTER, VALVE (3.025)	16	16				UR
	K0F–A3751–20	LIFTER, VALVE (3.050)	16	16				UR
	K0F–A3751–30	LIFTER, VALVE (3.075)	16	16				UR
	K0F–A3751–40	LIFTER, VALVE (3.100)	16	16				UR
	K0F–A3751–50	LIFTER, VALVE (3.122)	16	16				UR
	K0F–A3751–60	LIFTER, VALVE (3.142)	16	16				UR
	K0F–A3751–70	LIFTER, VALVE (3.162)	16	16				UR
	K0F–A3751–80	LIFTER, VALVE (3.182)	16	16				UR
	K0F–A3751–90	LIFTER, VALVE (3.202)	16	16				UR
	K0F–A3751–A0	LIFTER, VALVE (3.222)	16	16				UR
	K0F–A3751–B0	LIFTER, VALVE (3.242)	16	16				UR
	K0F–A3751–C0	LIFTER, VALVE (3.262)	16	16				UR
	K0F–A3751–D0	LIFTER, VALVE (3.282)	16	16				UR
	K0F–A3751–E0	LIFTER, VALVE (3.302)	16	16				UR
	K0F–A3751–F0	LIFTER, VALVE (3.322)	16	16				UR
	K0F–A3751–G0	LIFTER, VALVE (3.342)	16	16				UR
	K0F–A3751–H0	LIFTER, VALVE (3.362)	16	16				UR
	K0F–A3751–J0	LIFTER, VALVE (3.382)	16	16				UR
	K0F–A3751–K0	LIFTER, VALVE (3.402)	16	16				UR

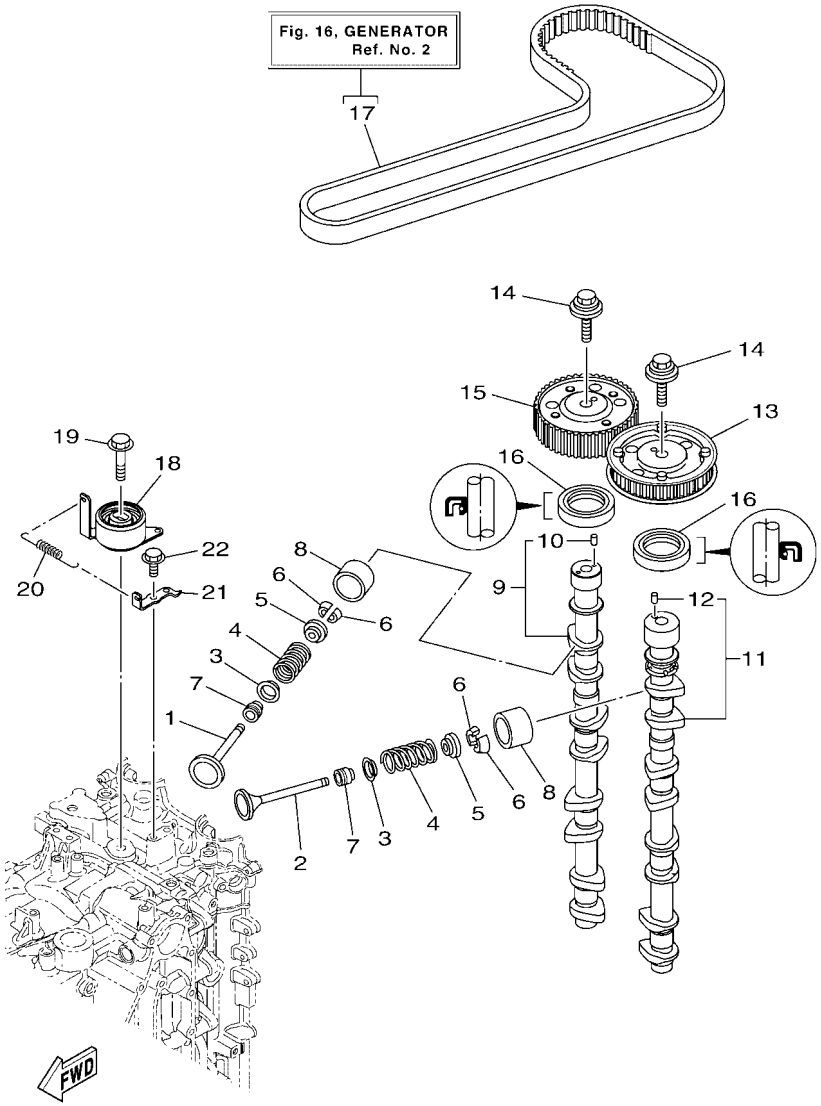

FIG. 8 VALVE

REF. NO.	PART NO.	DESCRIPTION	XCA	XCA2				REMARKS
8	K0F–A3751–L0	LIFTER, VALVE (3.422)	16	16				UR
	K0F–A3751–M0	LIFTER, VALVE (3.442)	16	16				UR
	K0F–A3751–N0	LIFTER, VALVE (3.462)	16	16				UR
	K0F–A3751–P0	LIFTER, VALVE (3.482)	16	16				UR
	K0F–A3751–R0	LIFTER, VALVE (3.502)	16	16				UR
	K0F–A3751–S0	LIFTER, VALVE (3.522)	16	16				UR
	K0F–A3751–T0	LIFTER, VALVE (3.542)	16	16				UR
	K0F–A3753–00	LIFTER, VALVE (3.562)	16	16				UR
	K0F–A3753–10	LIFTER, VALVE (3.582)	16	16				UR
	K0F–A3753–20	LIFTER, VALVE (3.602)	16	16				UR
	K0F–A3753–30	LIFTER, VALVE (3.625)	16	16				UR
	K0F–A3753–40	LIFTER, VALVE (3.650)	16	16				UR
	K0F–A3753–50	LIFTER, VALVE (3.675)	16	16				UR
	K0F–A3753–60	LIFTER, VALVE (3.700)	16	16				UR
	K0F–A3753–70	LIFTER, VALVE (3.725)	16	16				UR
9	6FA–12171–00	CAMSHAFT 1	1	1				
10	93605–10108	.PIN, DOWEL	1	1				
11	6DA–12181–01	CAMSHAFT 2	1	1				
12	93605–10108	.PIN, DOWEL	1	1				
13	6FA–115A0–00	DRIVEN GEAR ASSY	1	1				
14	90119–10050	BOLT, WITH WASHER	2	2				
15	6FA–11567–00	GEAR, DRIVEN 2	1	1				
16	93102–38008	OIL SEAL	2	2				
17	6DA–W4624–00	BELT (WITH ROTOR BOLTS)	1	1				
18	6DA–11590–00	TENSIONER ASSY	1	1				
19	90119–10M07	BOLT, WITH WASHER	1	1				
20	90506–18025	SPRING, TENSION	1	1				

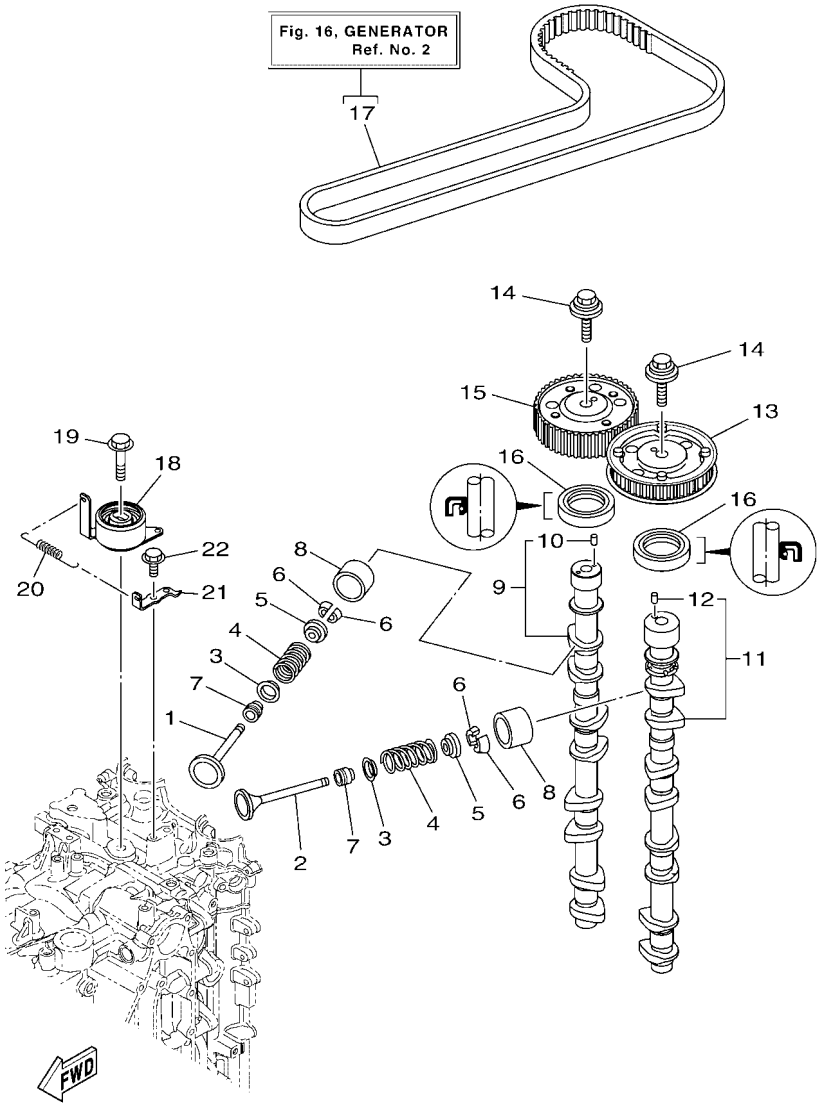

FIG. 8 VALVE

REF. NO.	PART NO.	DESCRIPTION	XCA	XCA2				REMARKS
21	6DA–11595–00	PLATE,VALVE	1	1				
22	97E75–06516	BOLT, HEXAGON W/W DEEP RECESS	1	1				

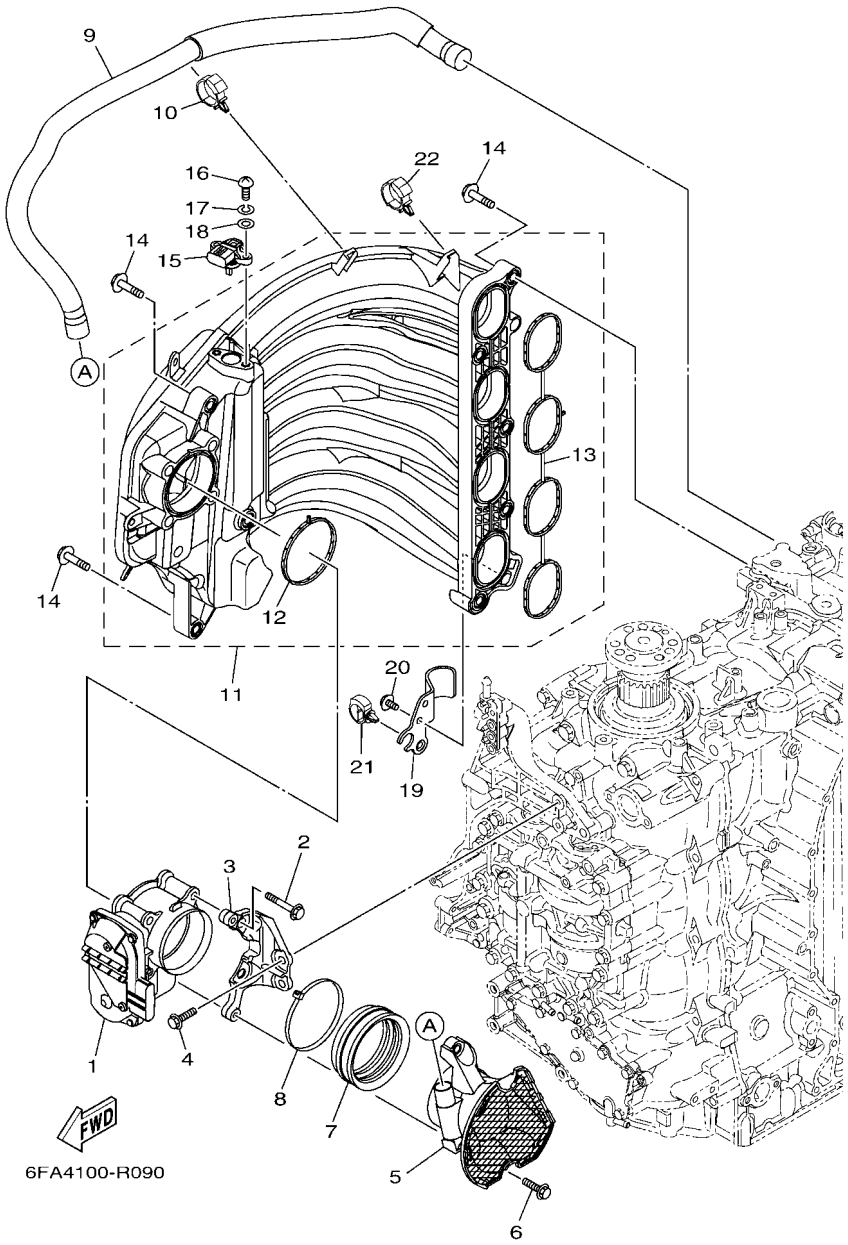

FIG. 9 INTAKE 1

REF. NO.	PART NO.	DESCRIPTION	XCA	XCA2				REMARKS
1	6DA–13751–01	BODY, THROTTLE 1	1	1				
2	97E75–08560	BOLT, HEXAGON W/W DEEP RECESS	4	4				
3	6DA–13152–00	STAY 2	1	1				
4	95D75–06025	BOLT, FLANGE DEEP RECESS	2	2				
5	6DA–14440–00	SILENCER ASSY, INTAKE	1	1				
6	95D75–06025	BOLT, FLANGE DEEP RECESS	2	2				
7	6P2–1441J–01	PIPE, SILENCER	1	1				
8	90464–99004	CLAMP	1	1				
9	6DA–15373–00	PIPE, BREATHER	1	1				
10	90464–12183	CLAMP	1	1				
11	6DA–13641–00	MANIFOLD, INTAKE 1	1	1				
12	6DA–13646–00	.GASKET, MANIFOLD 2	1	1				
13	6DA–13645–00	.GASKET, MANIFOLD 1	1	1				
14	90119–08020	BOLT, WITH WASHER	9	9				
15	68F–83688–10	SENSOR ASSY	1	1				
16	97885–05016	SCREW, PAN HEAD	2	2				
17	92995–05100	WASHER	2	2				
18	92995–05600	WASHER	2	2				
19	6DA–13881–00	COVER 1	1	1				
20	95D95–06012	BOLT, FLANGE DEEP RECESS	2	2				
21	90464–20181	CLAMP	1	1				
22	90464–12183	CLAMP	1	1				

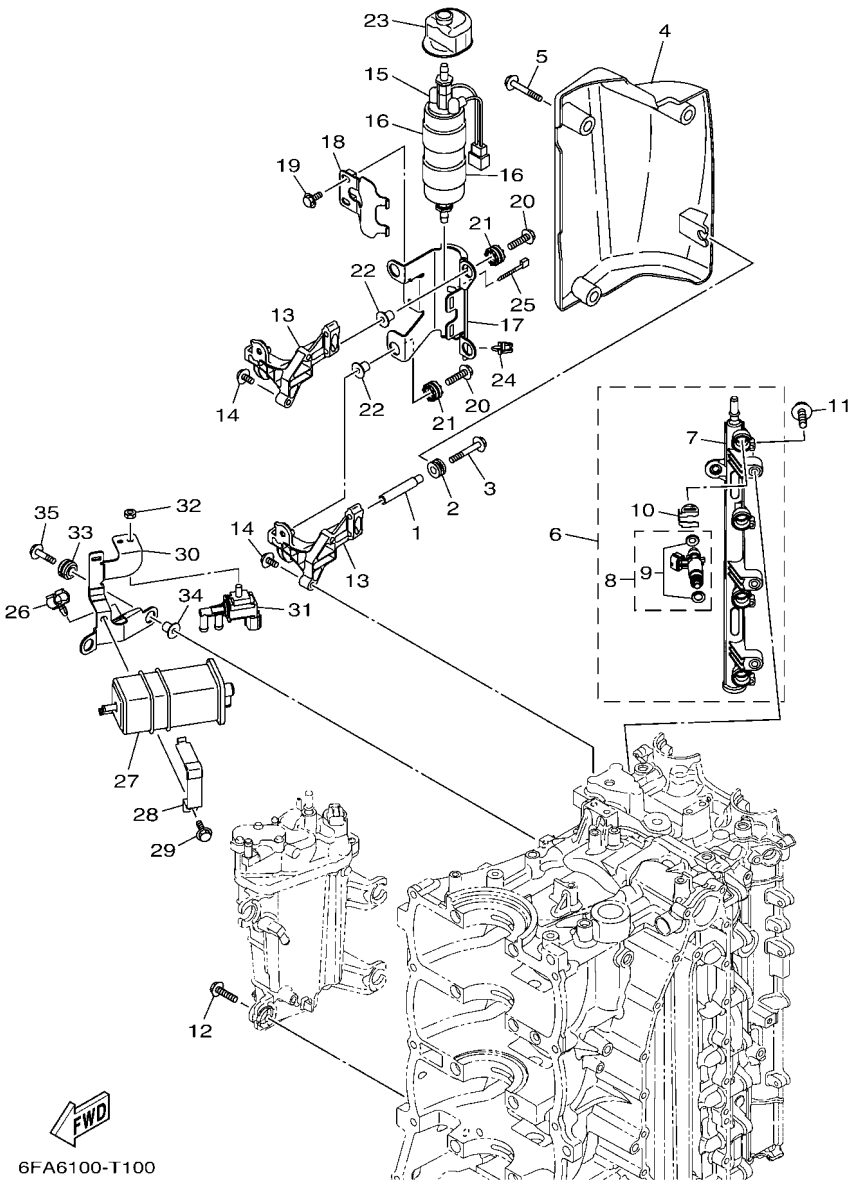

FIG. 10 INTAKE 2

REF. NO.	PART NO.	DESCRIPTION	XCA	XCA2				REMARKS
1	90387–06283	COLLAR	1	1				
2	90480–12314	GROMMET	1	1				
3	90105–06054	BOLT, FLANGE	1	1				
4	6DA–13564–00	COVER, MANIFOLD	1	1				
5	95D95–06020	BOLT, FLANGE DEEP RECESS	3	3				
6	6DA–13160–01	DELIVERY PIPE ASSY 1	1	1				
7	6DA–13161–01	.PIPE, DELIVERY 1	1	1				
8	6DA–13761–00	.INJECTOR	4	4				
9	6AW–1410B–00	..PACKING KIT	1	1				
10	6AW–13577–10	.CLIP	4	4				
11	90105–06M08	BOLT, FLANGE	3	3				
12	90119–06299	BOLT, WITH WASHER	4	4				
13	6DA–24425–00	BRACKET, FUEL PUMP 1	2	2				
14	90105–06M08	BOLT, FLANGE	4	4				
15	6GR–24410–01	FUEL PUMP ASSY	1	1				
16	6DA–24492–01	BUSH, FUEL PUMP	2	2				
17	6DA–24491–00	BRACKET, FUEL PUMP	1	1				
18	6DA–24426–00	BRACKET, FUEL PUMP 2	1	1				
19	95D95–06012	BOLT, FLANGE DEEP RECESS	2	2				
20	90119–06309	BOLT, WITH WASHER	4	4				
21	60V–85516–00	SPACER	4	4				
22	90387–06289	COLLAR	4	4				
23	6DA–24462–00	CAP, BLIND	1	1				
24	90464–11121	CLAMP	1	1				
25	90465–11M10	CLAMP	1	1				
26	90464–09130	CLAMP	1	1				
27	6P2–24170–00	CANISTER ASSY	1	1				

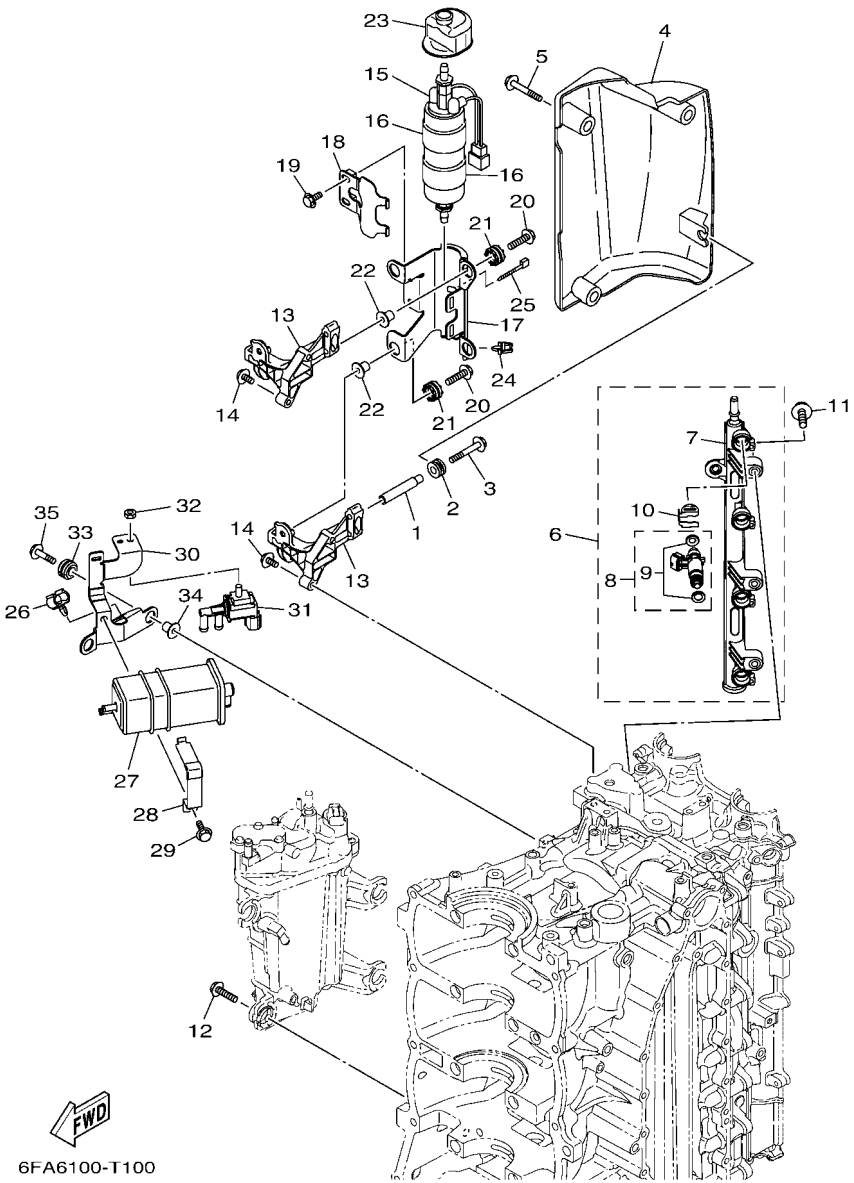

FIG. 10 INTAKE 2

REF. NO.	PART NO.	DESCRIPTION	XCA	XCA2				REMARKS
28	63P–2419A–01	HOLDER	1	1				
29	95D95–06016	BOLT, FLANGE DEEP RECESS	1	1				
30	6DA–2134X–00	BRACKET, CANISTER	1	1				
31	6C5–86120–00	SOLENOID VALVE ASSY	1	1				
32	95380–06600	NUT, HEXAGON	1	1				
33	90480–14031	GROMMET	2	2				
34	90387–06289	COLLAR	2	2				
35	90119–06309	BOLT, WITH WASHER	2	2				

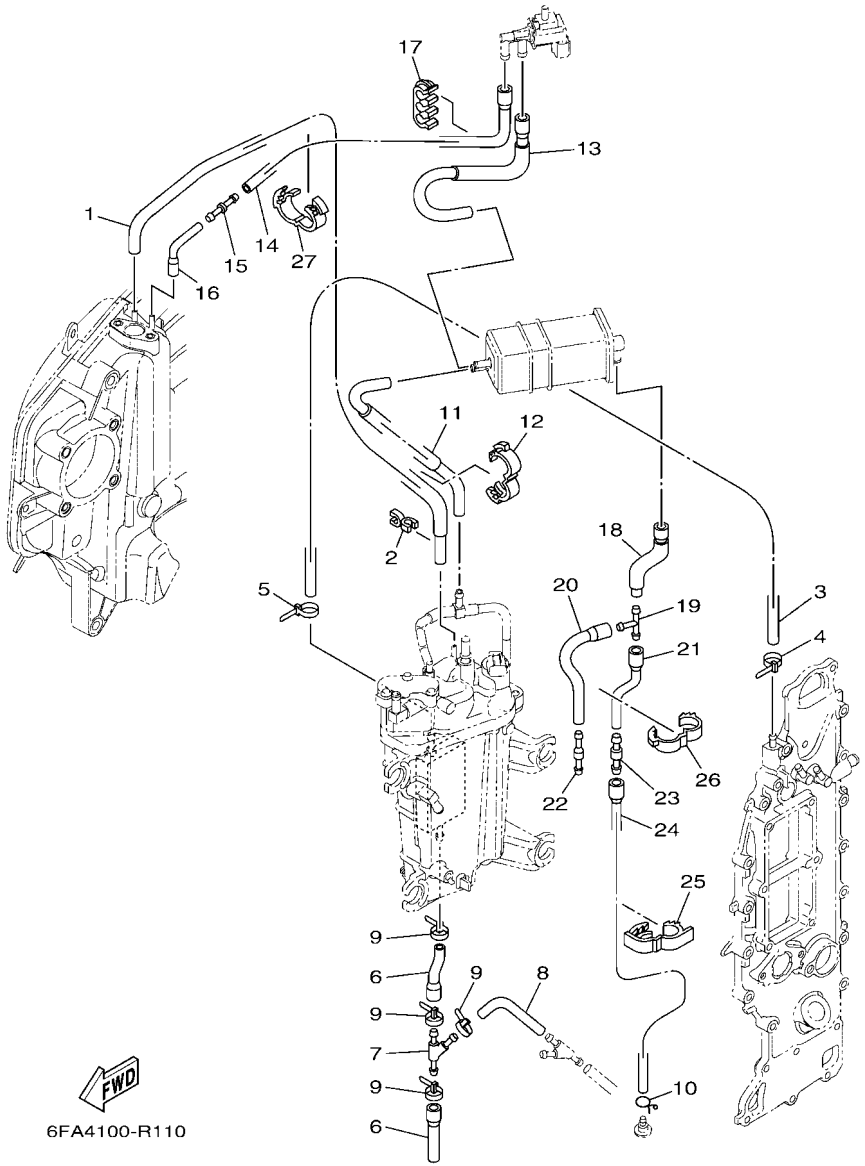

FIG. 11 INTAKE 3

REF. NO.	PART NO.	DESCRIPTION	XCA	XCA2				REMARKS
1	6DA–13532–00	HOSE, VACUUM SENSING 3	1	1				
2	90464–07M41	CLAMP	1	1				
3	90445–09120	HOSE (L600)	1	1				
4	90465–11M10	CLAMP	1	1				
5	90465–11M10	CLAMP	1	1				
6	6DA–12576–00	HOSE 1	2	2				
7	6CE–24377–00	PIPE, JOINT 2	1	1				
8	90445–10056	HOSE (L85)	1	1				
9	90465–11M10	CLAMP	4	4				
10	90467–09M09	CLIP	1	1				
11	6DA–1475A–00	PIPE 1	1	1				
12	90464–16001	CLAMP	1	1				
13	6DA–1475F–00	PIPE 3	1	1				
14	6DA–2416A–00	HOSE	1	1				
15	6CB–14989–00	ORIFICE, AIR VENT	1	1				
16	6DA–1475G–00	PIPE 4	1	1				
17	90464–10011	CLAMP	1	1				
18	6DA–13545–00	HOSE 1	1	1				
19	688–24378–00	PIPE, JOINT 3	1	1				
20	68V–13546–10	HOSE 2	1	1				
21	6FA–13548–00	HOSE, AIR 4	1	1				
22	6E5–21744–00	BREATHER	1	1				
23	63D–21744–00	BREATHER	1	1				
24	6FA–13547–00	HOSE 3	1	1				
25	90464–18004	CLAMP	1	1				
26	90464–16001	CLAMP	1	1				
27	90464–16001	CLAMP	1	1				

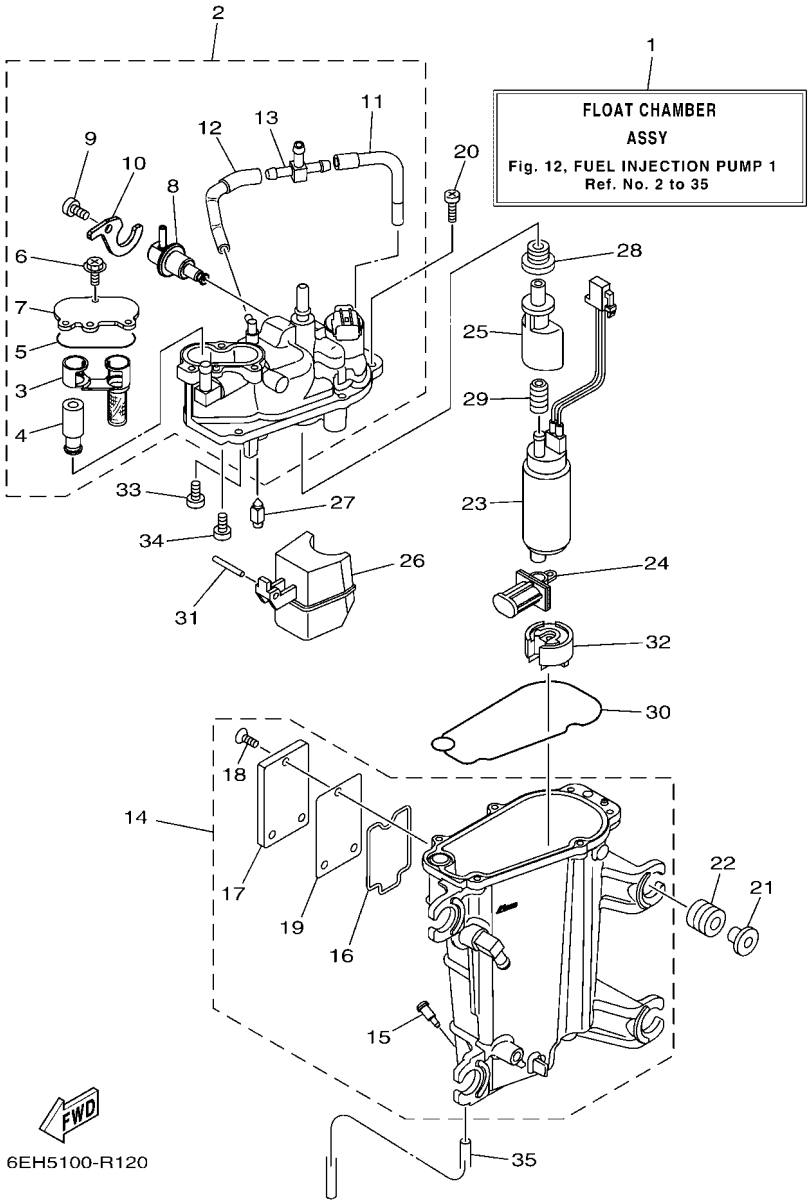

FIG. 12 FUEL INJECTION PUMP 1

REF. NO.	PART NO.	DESCRIPTION	XCA	XCA2				REMARKS
1	6DA–14180–02	FLOAT CHAMBER ASSY	1	1				
2	6DA–14182–00	COVER, FLOAT CHAMBER	1	1				
3	6CB–24501–01	.FILTER, FUEL	1	1				
4	6CB–24460–00	.RELIEF VALVE ASSY	1	1				
5	6CB–13016–00	.O-RING	1	1				
6	6CB–14216–00	.SCREW	3	3				
7	6CB–24217–00	.COVER	1	1				
8	6CB–13906–01	.REGULATOR, PRESSURE	1	1				
9	6CB–14564–00	.SCREW	1	1				
10	6DA–14146–00	.PLATE	1	1				
11	6DA–13892–00	.HOSE, AIR 2	1	1				
12	6DA–13893–00	.HOSE, AIR 3	1	1				
13	69J–24379–00	.PIPE, JOINT 4	1	1				
14	6DA–14181–00	BODY, FLOAT CHAMBER 1	1	1				
15	6P2–14191–00	.PLUG, DRAIN	1	1				
16	6CB–14239–00	.SEAL	1	1				
17	6CB–24452–10	.COVER	1	1				
18	6CB–14429–01	.SCREW	3	3				
19	6CB–24482–00	.GASKET 1	1	1				
20	63P–14567–00	SCREW	6	6				
21	63P–13716–00	COLLAR	4	4				
22	6CB–13593–00	DAMPER	4	4				
23	6P2–13907–21	FUEL PUMP COMP.	1	1				
24	63P–13915–00	FILTER	1	1				
25	6AW–13132–00	JOINT	1	1				
26	6CB–14985–00	FLOAT	1	1				
27	6CB–14546–00	VALVE, NEEDLE	1	1				

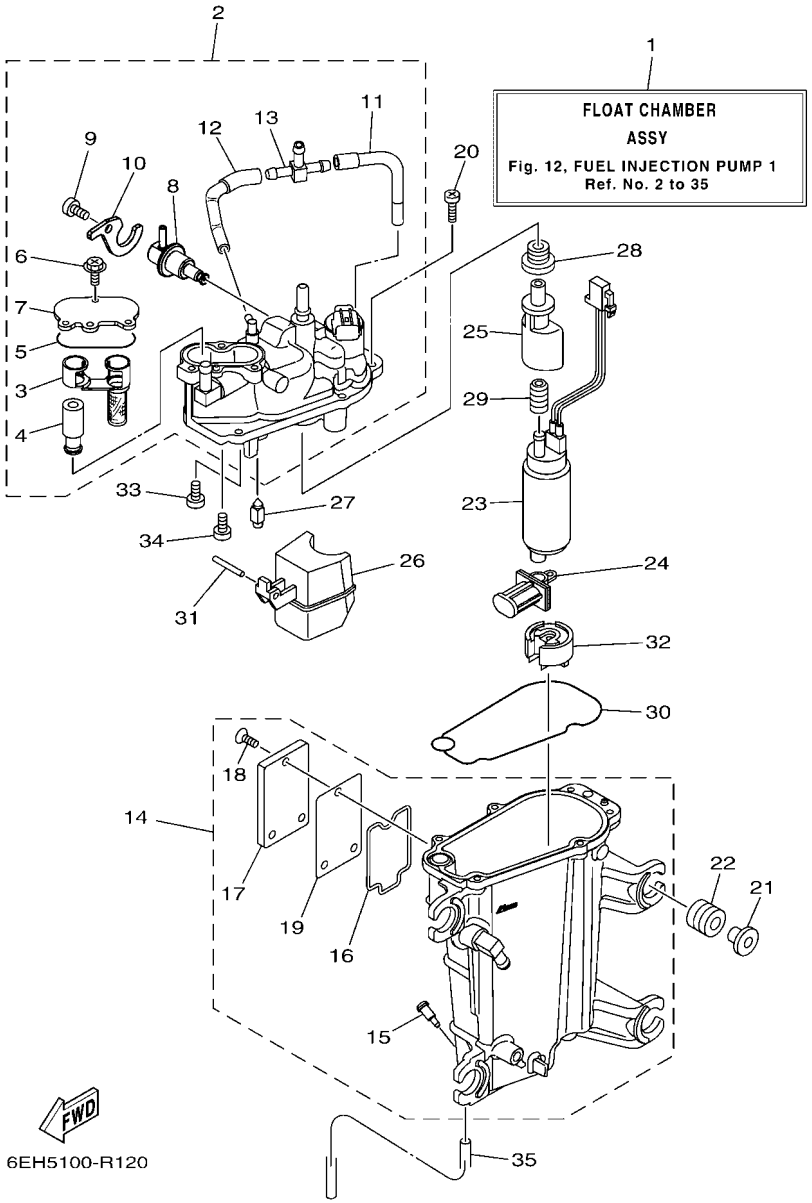

FIG. 12 FUEL INJECTION PUMP 1

REF. NO.	PART NO.	DESCRIPTION	XCA	XCA2				REMARKS
28	6CB–1447B–00	BUSH 1	1	1				
29	6AW–13781–00	DAMPER, PUMP	1	1				
30	6CB–14984–00	GASKET, FLOAT CHAMBER	1	1				
31	6P2–14386–00	PIN, FLOAT	1	1				
32	6AW–13784–00	COVER, PUMP	1	1				
33	4SV–24453–00	SCREW	1	1				
34	98507–04008	SCREW, PAN HEAD	1	1				
35	6P2–14149–00	PIPE	1	1				

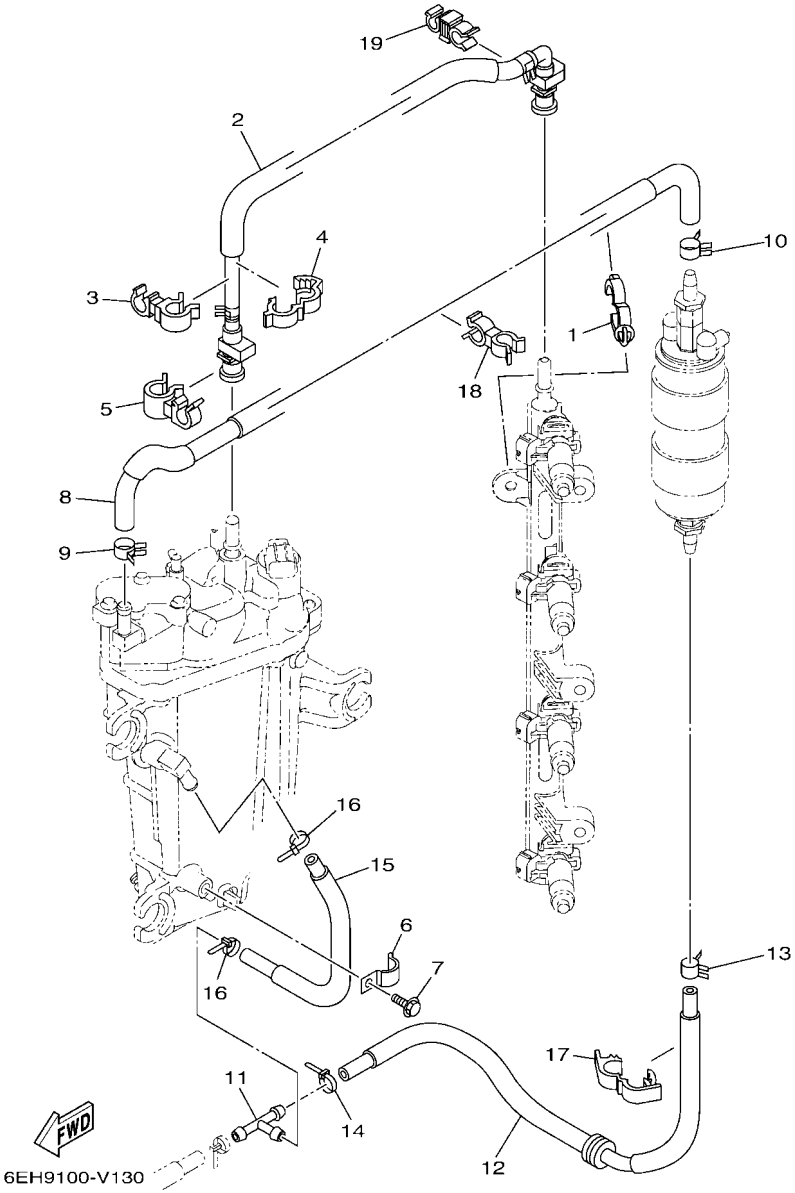

FIG. 13 FUEL INJECTION PUMP 2

REF. NO.	PART NO.	DESCRIPTION	XCA	XCA2				REMARKS
1	90464–20181	CLAMP	1	1				
2	6DA–24310–01	FUEL PIPE ASSY	1	1				
3	90464–12010	CLAMP	1	1				
4	90464–16003	CLAMP	1	1				
5	90464–15007	CLAMP	1	1				
6	90465–08M63	CLAMP	1	1				
7	95D95–06010	BOLT, FLANGE DEEP RECESS	1	1				
8	6DA–24324–00	PIPE 13	1	1				
9	90467–120A7	CLIP	1	1				
10	90467–140A9	CLIP	1	1				
11	6E5–24378–00	PIPE, JOINT 3	1	1				
12	6DA–24317–00	PIPE 7	1	1				
13	90467–141A2	CLIP	1	1				
14	90465–11M10	CLAMP	1	1				
15	6DA–24323–00	PIPE 12	1	1				
16	90465–11M10	CLAMP	2	2				
17	90464–18004	CLAMP	1	1				
18	90464–13260	CLAMP	1	1				
19	90464–13013	CLAMP	1	1				

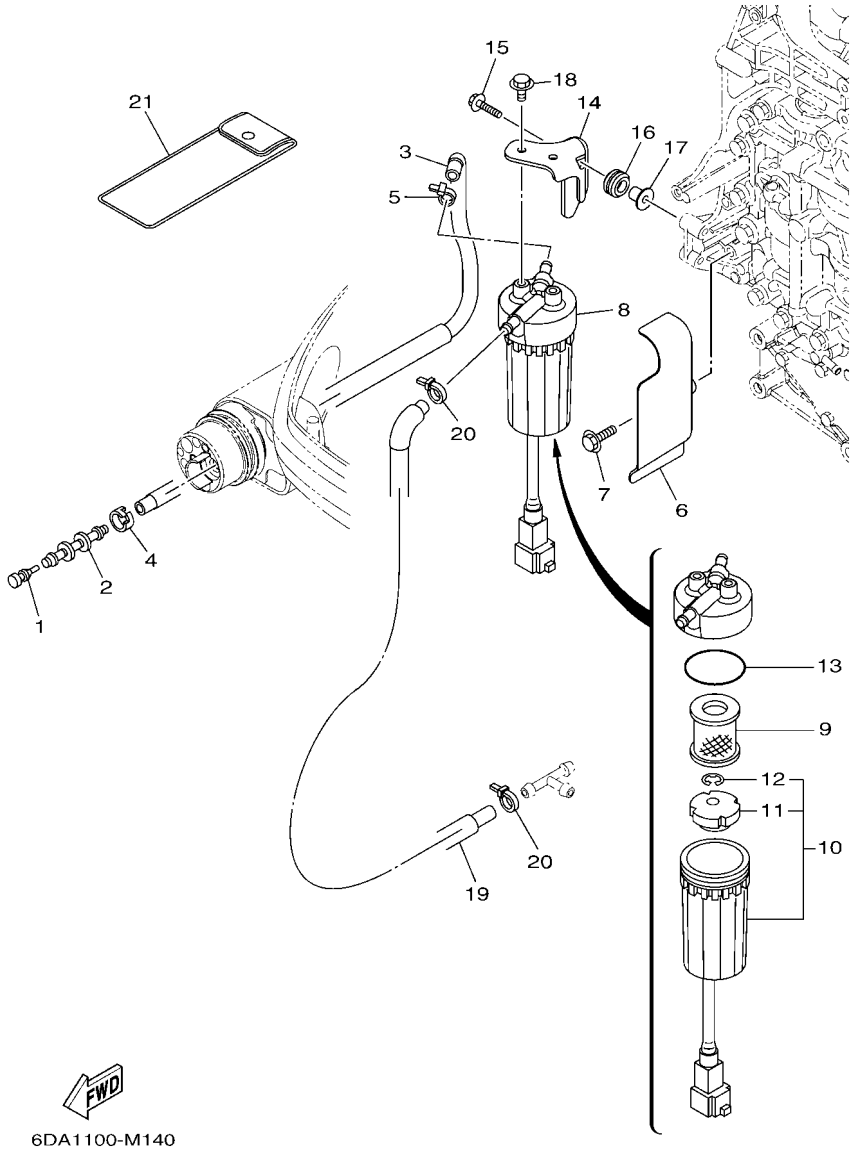

FIG. 14 FUEL 1

REF. NO.	PART NO.	DESCRIPTION	XCA	XCA2				REMARKS
1	689–85547–01	DAMPER	1	1				
2	6AW–24377–01	PIPE, JOINT 2	1	1				
3	6DA–24314–00	PIPE 4	1	1				
4	6E5–24351–51	BAND 1	1	1				
5	90465–11M10	CLAMP	1	1				
6	6DA–24596–00	COVER	1	1				
7	95D95–06025	BOLT, FLANGE DEEP RECESS	2	2				
8	6P3–24560–04	FILTER ASSY	1	1				
9	6P3–24563–02	.ELEMENT, FILTER	1	1				
10	6P3–24562–03	.CUP, FILTER	1	1				
11	6P3–24469–00	..FLOAT, WATER LEVEL	1	1				
12	6P3–24519–00	..CLIP	1	1				
13	6P3–24564–00	.GASKET	1	1				
14	6DA–24566–00	BRACKET, FILTER	1	1				
15	90119–06309	BOLT, WITH WASHER	2	2				
16	90480–15013	GROMMET	2	2				
17	90387–06289	COLLAR	2	2				
18	95D95–06012	BOLT, FLANGE DEEP RECESS	2	2				
19	6DA–24313–00	PIPE 3	1	1				
20	90465–11M10	CLAMP	2	2				
21	69J–28100–03	TOOL KIT	1	1				AP

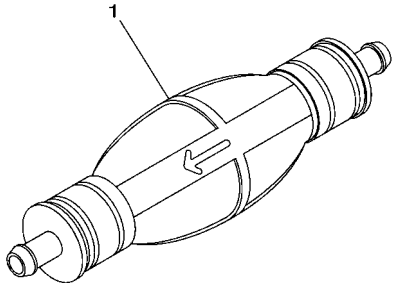

68VC100-L120

FIG. 15 FUEL 2

REF. NO.	PART NO.	DESCRIPTION	XCA	XCA2				REMARKS
1	6YK–24360–73	PRIMER PUMP ASSY	1	1				AP

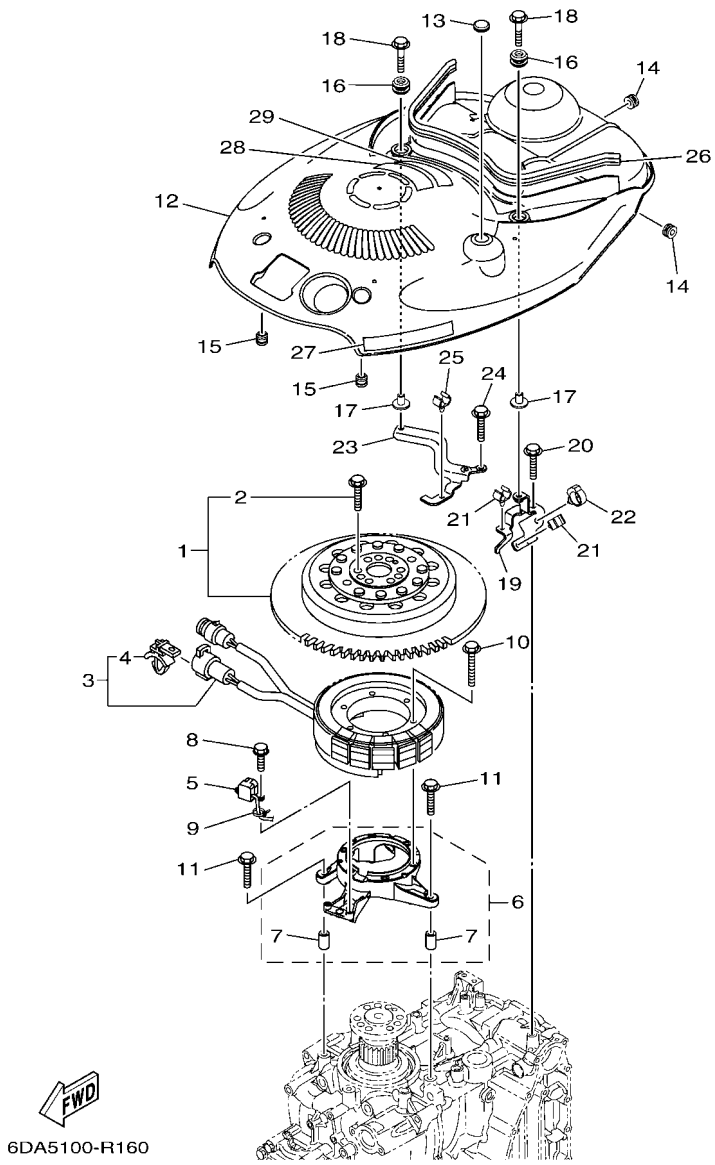

FIG. 16 GENERATOR

REF. NO.	PART NO.	DESCRIPTION	XCA	XCA2				REMARKS
1	6DA–W8145–00	ROTOR ASSY WITH BOLTS	1	1				
2	6EK–W9010–00	.BOLT SET	1	1				
3	6DA–81410–00	STATOR ASSY	1	1				
4	90464–12002	.CLAMP	1	1				
5	6CB–85580–00	COIL, PULSER	1	1				
6	6DA–85561–00	BASE, MAGNETO	1	1				
7	99530–08012	.PIN, DOWEL	2	2				
8	97595–05520	BOLT, WITH WASHER	2	2				
9	90465–13M97	CLAMP	1	1				
10	95022–06035	BOLT, FLANGE	6	6				
11	95D95–06030	BOLT, FLANGE DEEP RECESS	4	4				
12	6DA–81337–00	COVER, FLYWHEEL	1	1				
13	90480–16025	GROMMET	1	1				
14	90480–12314	GROMMET	2	2				
15	6A0–82317–01	DAMPER, IGNITION COIL	2	2				
16	6BG–42748–01	GROMMET	2	2				
17	90387–06M69	COLLAR	2	2				
18	90119–06291	BOLT, WITH WASHER	2	2				
19	6DA–8132G–01	PLATE	1	1				
20	95D95–06016	BOLT, FLANGE DEEP RECESS	1	1				
21	90464–09130	CLAMP	2	2				
22	90464–20181	CLAMP	1	1				
23	6DA–82398–01	PLATE 3	1	1				
24	95D95–06016	BOLT, FLANGE DEEP RECESS	2	2				
25	90464–09130	CLAMP	1	1				
26	6DA–42617–00	DAMPER, FORM	1	1				
27	63P–13437–63	MARK, CAUTION	1	1				

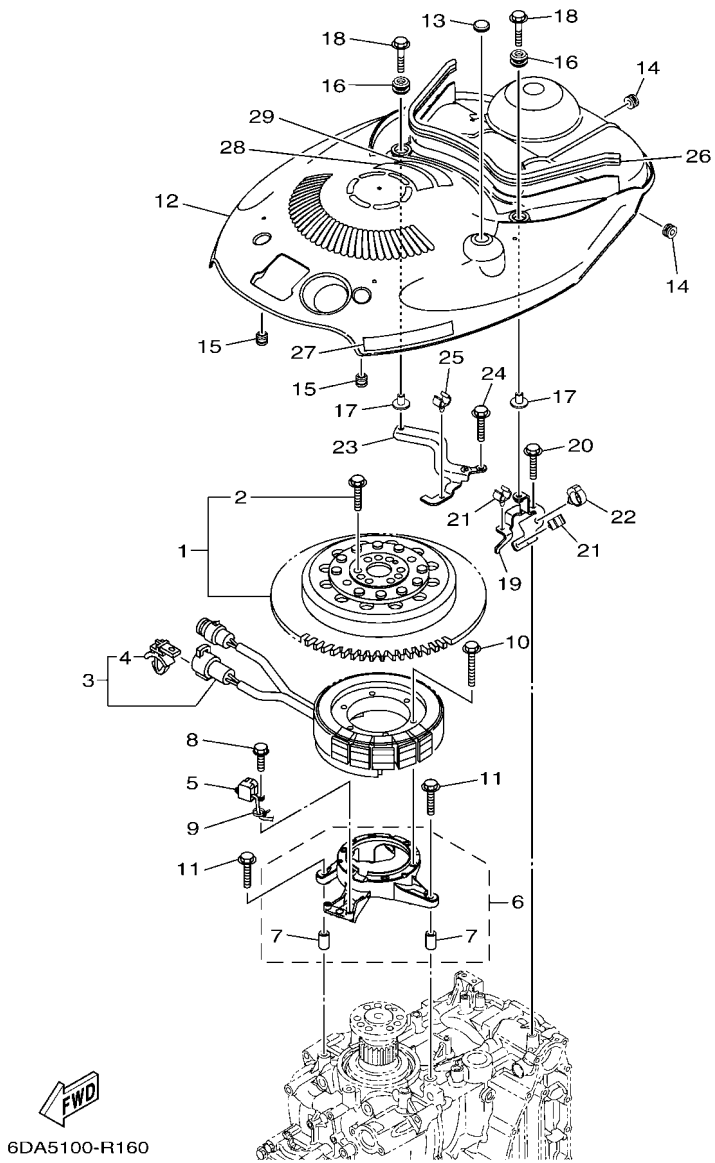

FIG. 16 GENERATOR

REF. NO.	PART NO.	DESCRIPTION	XCA	XCA2				REMARKS
28	6EE–81994–40	LABEL, SAFETY	1	1				
29	6EE–81994–50	LABEL, SAFETY	1	1				

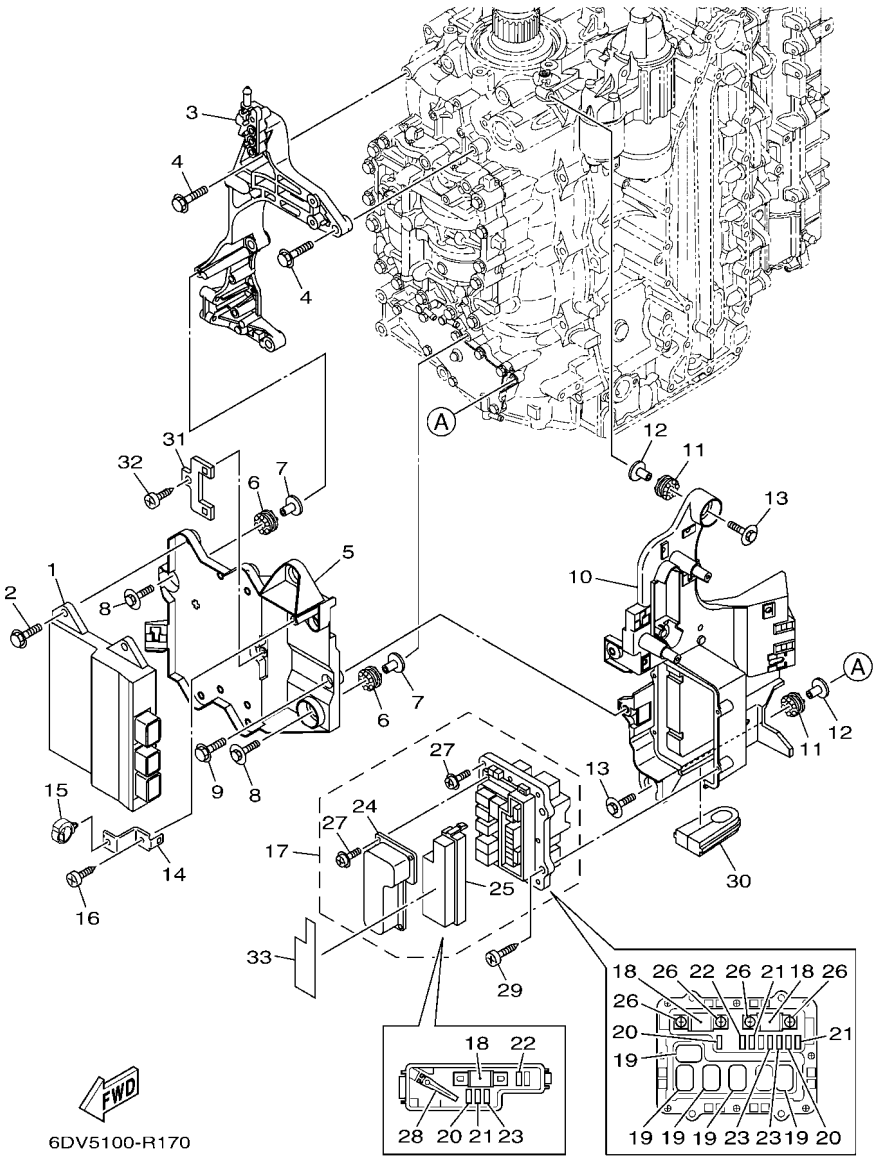

FIG. 17 ELECTRICAL 1

REF. NO.	PART NO.	DESCRIPTION	XCA	XCA2				REMARKS
1	6HP–8591A–01	ENGINE CONTROL UNIT ASSY	1	1				
2	95D95–06020	BOLT, FLANGE DEEP RECESS	4	4				
3	6DA–85991–00	BRACKET, UNIT	1	1				
4	95D75–08035	BOLT, FLANGE DEEP RECESS	4	4				
5	6DA–81948–01	BRACKET	1	1				
6	68F–85516–01	SPACER	3	3				
7	90387–06176	COLLAR	3	3				
8	68F–85119–00	BOLT	3	3				
9	95D95–06016	BOLT, FLANGE DEEP RECESS	2	2				
10	6DA–81952–01	HOLDER, RELAY	1	1				
11	68F–85516–01	SPACER	3	3				
12	90387–06176	COLLAR	3	3				
13	68F–85119–00	BOLT	3	3				
14	6DA–85548–01	HOLDER	1	1				
15	90464–20181	CLAMP	1	1				
16	97780–60620	SCREW, TAPPING	1	1				
17	6DV–82170–11	FUSE BOX ASSY	1	1				
18	6P2–82151–00	.FUSE (60A)	3	3				
19	6AW–8195A–00	.RELAY ASSY	5	5				
20	67F–82151–40	.FUSE (10A)	3	3				
21	67F–82151–50	.FUSE (15A)	3	3				
22	67F–82151–00	.FUSE (20A)	2	2				
23	67F–82151–10	.FUSE (30A)	3	3				
24	6CB–81639–10	.COVER	1	1				
25	6CB–85544–00	.CASE	1	1				
26	68F–82846–00	.SCREW, PAN HEAD (M5)	4	4				
27	6P2–82113–00	.SCREW (M3)	13	13				

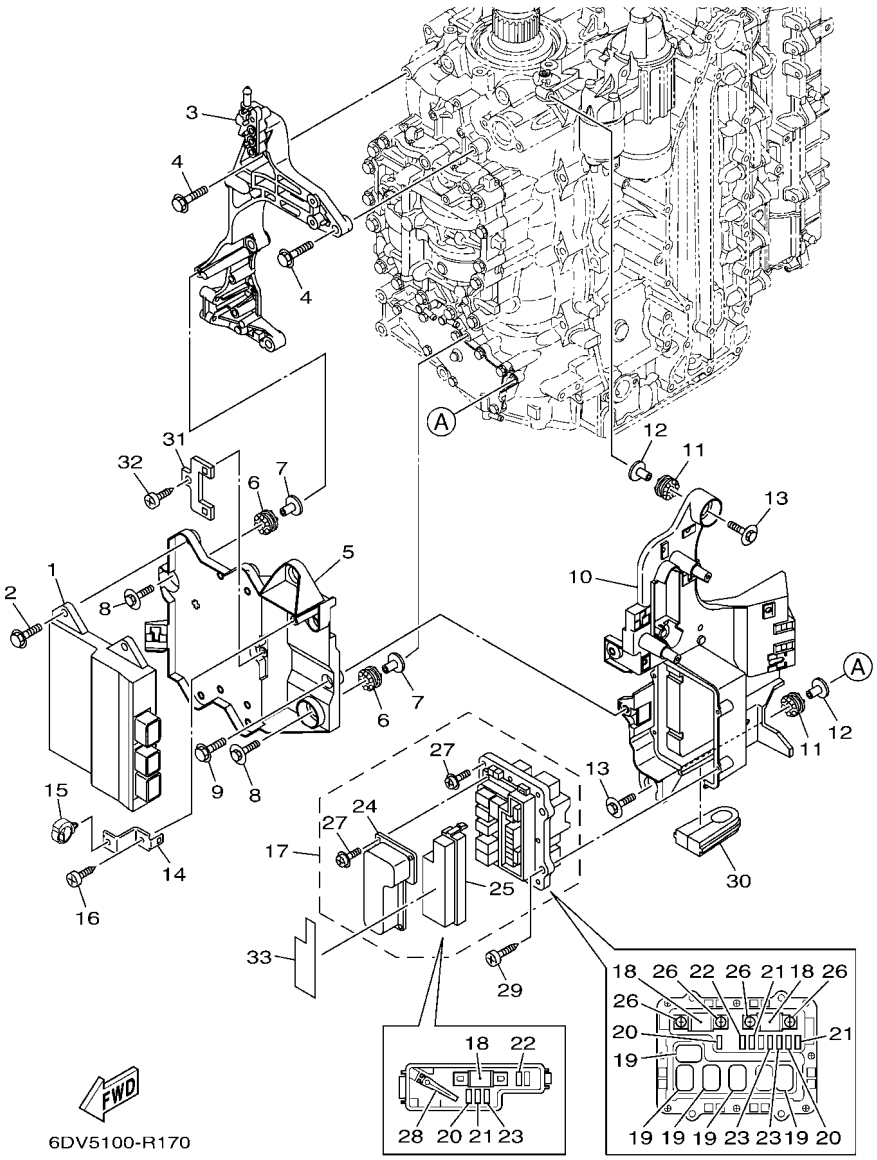

FIG. 17 ELECTRICAL 1

REF. NO.	PART NO.	DESCRIPTION	XCA	XCA2				REMARKS
28	67F–2812A–00	.PULLER, FUSE	1	1				
29	97780–50620	SCREW, TAPPING	4	4				
30	6DA–81336–01	GROMMET	1	1				
31	6C5–8257V–00	PLATE, CONNECTOR	1	1				
32	97780–60620	SCREW, TAPPING	1	1				
33	6DV–81919–01	GRAPHIC, REGULATOR	1	1				

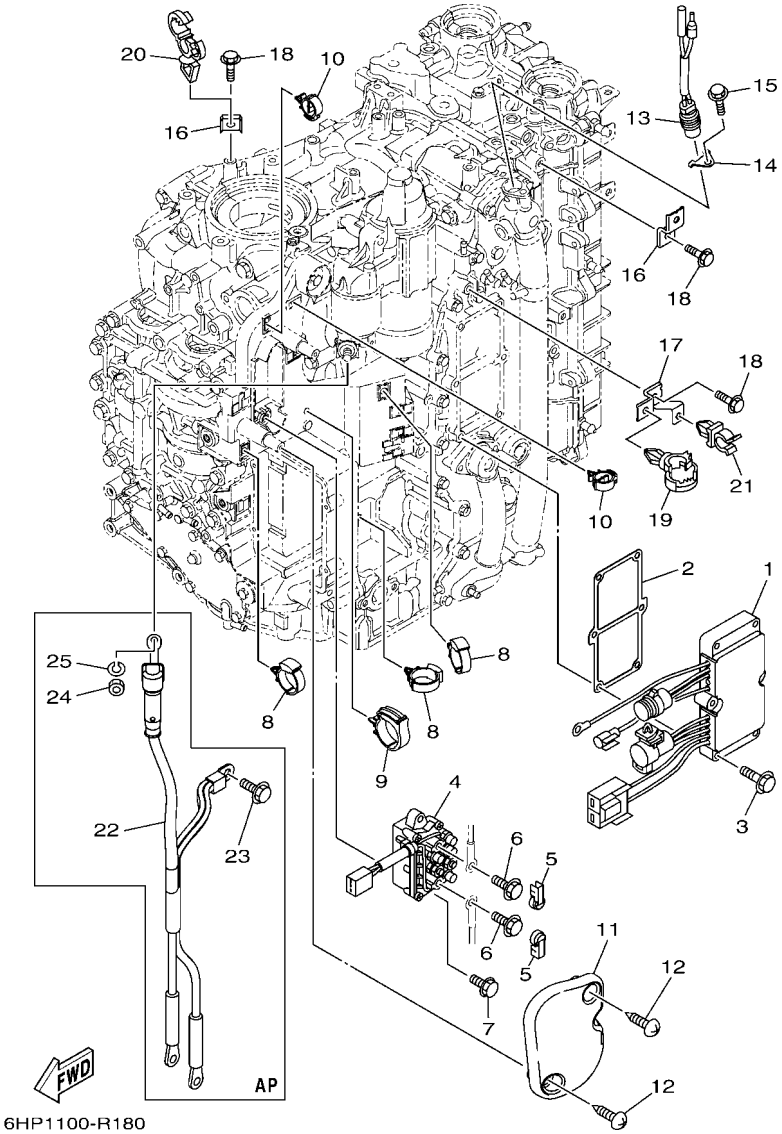

FIG. 18 ELECTRICAL 2

REF. NO.	PART NO.	DESCRIPTION	XCA	XCA2				REMARKS
1	6DV–81960–00	RECTIFIER & REGULATOR ASSY	1	1				
2	6DA–81975–01	PLATE, RECTIFIER FITTING	1	1				
3	97E95–06535	BOLT, HEXAGON W/W DEEP RECESS	6	6				
4	6AW–81950–00	RELAY ASSY	1	1				
5	6P2–8183X–00	CAP, TERMINAL	2	2				
6	97E95–06610	BOLT, HEXAGON W/W DEEP RECESS	2	2				
7	97E95–06520	BOLT, HEXAGON W/W DEEP RECESS	2	2				
8	90464–12183	CLAMP	3	3				
9	90464–32002	CLAMP	1	1				
10	90464–18246	CLAMP	2	2				
11	6DA–81942–00	COVER	1	1				
12	90169–05M00	SCREW, TRUSS HEAD TAPPING	2	2				
13	6P2–82560–01	THERMO SWITCH ASSY	1	1				
14	6E9–82588–00	PLATE	1	1				
15	95D95–06012	BOLT, FLANGE DEEP RECESS	1	1				
16	6DA–82388–00	PLATE	2	2				
17	6DA–82389–00	PLATE 2	1	1				
18	95D95–06016	BOLT, FLANGE DEEP RECESS	3	3				
19	90464–20181	CLAMP	1	1				
20	90464–13249	CLAMP	1	1				
21	90464–09008	CLAMP	1	1				
22	6DA–82105–02	BATTERY CABLE	1	1				AP
23	95D95–08016	BOLT, FLANGE DEEP RECESS	1	1				AP
24	95333–08600	NUT	1	1				AP
25	92903–08100	WASHER, SPRING	1	1				AP

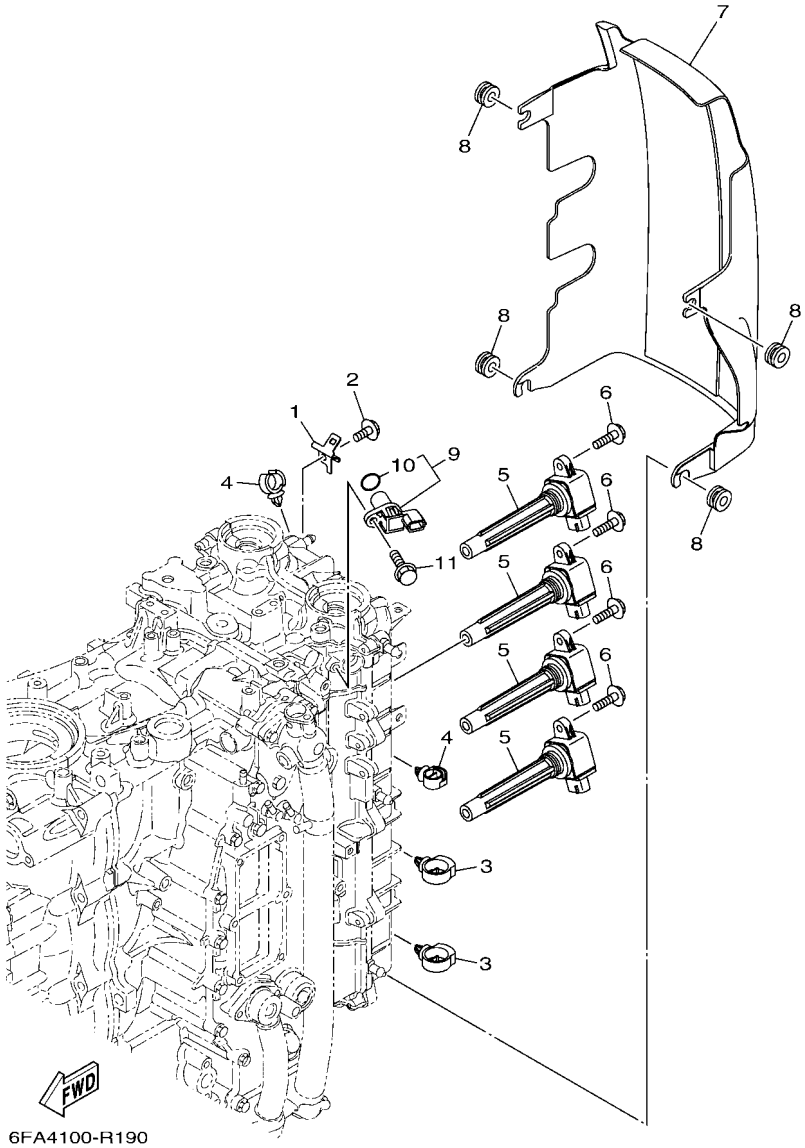

FIG. 19 ELECTRICAL 3

REF. NO.	PART NO.	DESCRIPTION	XCA	XCA2				REMARKS
1	6D8–82389–01	PLATE 2	1	1				
2	95D95–06012	BOLT, FLANGE DEEP RECESS	1	1				
3	90464–20181	CLAMP	2	2				
4	90464–13249	CLAMP	2	2				
5	6CB–82310–00	IGNITION COIL ASSY	4	4				
6	95D95–06025	BOLT, FLANGE DEEP RECESS	4	4				
7	6DA–82314–00	COVER, IGNITION COIL	1	1				
8	90480–12314	GROMMET	4	4				
9	6P2–85896–00	SENSOR, CAM POSITION	1	1				
10	6P2–85075–00	.O-RING	1	1				
11	97E95–06520	BOLT, HEXAGON W/W DEEP RECESS	1	1				

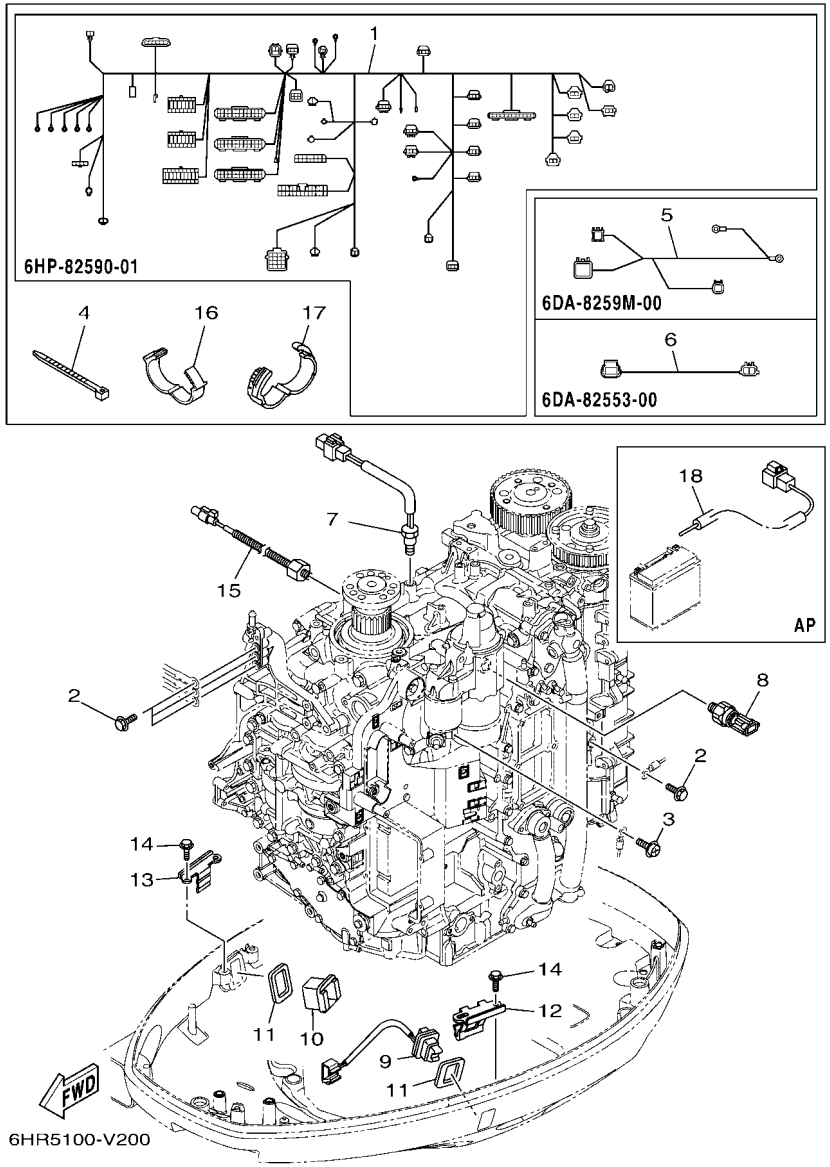

FIG. 20 ELECTRICAL 4

REF. NO.	PART NO.	DESCRIPTION	XCA	XCA2				REMARKS
1	6HP–82590–01	WIRE HARNESS ASSY	1	1				
2	97E95–06516	BOLT, HEXAGON W/W DEEP RECESS	4	4				
3	97985–04308	SCREW, WITH WASHER	1	1				
4	90465–11M59	CLAMP	1	1				
5	6DA–8259M–00	WIRE HARNESS ASSY 2	1	1				
6	6DA–82553–00	EXTENSION, WIRE LEAD	1	1				
7	6CB–85790–00	THERMOSENSOR ASSY	1	1				
8	6AW–83651–00	SENDER, OIL PRESSURE	1	1				
9	6BR–82563–01	TRIM & TILT SWITCH ASSY	1	1				
10	69J–42723–01	COVER, BOTTOM	1	1				
11	69J–82587–01	GASKET	2	2				
12	63P–83614–01	BRACKET	1	1				
13	6DA–83614–00	BRACKET	1	1				
14	95D95–06012	BOLT, FLANGE DEEP RECESS	4	4				
15	6CJ–85780–00	SENSOR, KNOCK	1	1				
16	90464–26001	CLAMP	5	5				
17	90464–28003	CLAMP	3	3				
18	69J–81949–03	WIRE, LEAD (ISOLATOR, 3.8M)	1	1				AP

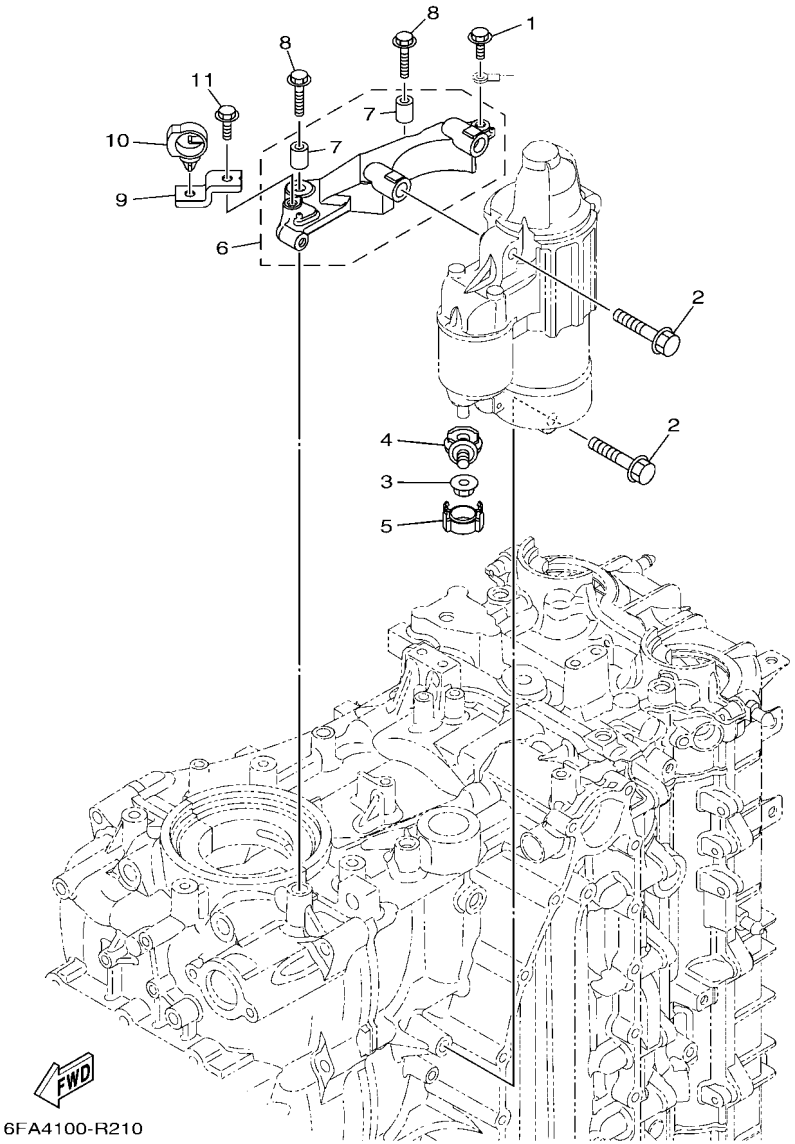

FIG. 21 ELECTRICAL 5

REF. NO.	PART NO.	DESCRIPTION	XCA	XCA2				REMARKS
1	97E95–06516	BOLT, HEXAGON W/W DEEP RECESS	1	1				
2	97513–08545	BOLT, WITH WASHER	3	3				
3	90179–08003	NUT	1	1				
4	60V–81925–00	TERMINAL	1	1				
5	68F–82582–00	CAP,1	1	1				
6	6DA–81822–00	BRACKET, STARTING MOTOR	1	1				
7	99590–10114	.PIN, DOWEL	2	2				
8	90105–08M87	BOLT, FLANGE	2	2				
9	6DA–82388–00	PLATE	1	1				
10	90464–20181	CLAMP	1	1				
11	95D95–06016	BOLT, FLANGE DEEP RECESS	1	1				

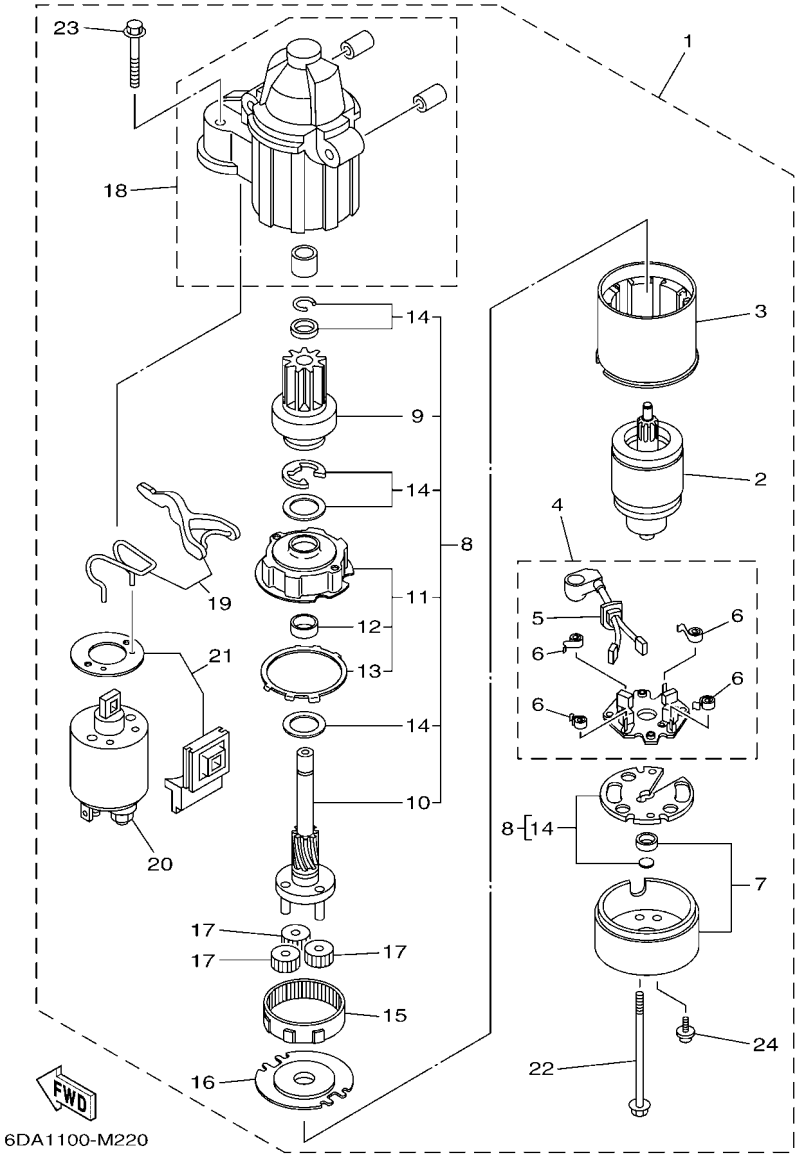

FIG. 22 STARTING MOTOR

REF. NO.	PART NO.	DESCRIPTION	XCA	XCA2				REMARKS
1	6CB–81800–01	STARTING MOTOR ASSY	1	1				
2	67F–81850–00	.ARMATURE ASSY	1	1				
3	67F–81810–00	.STATOR ASSY	1	1				
4	69J–81840–11	.BRUSH HOLDER ASSY	1	1				
5	69J–81801–11	..BRUSH SET	1	1				
6	67F–81813–00	..SPRING, BRUSH	4	4				
7	6CB–81820–00	.REAR BRACKET ASSY	1	1				
8	6CB–81807–00	.GEAR ASSY, STARTING MOTOR	1	1				
9	6CB–81832–00	..CLUTCH, OVER RUN	1	1				
10	6CB–81836–00	..SHAFT, PINION	1	1				
11	67F–81821–00	..BRACKET, CENTER 1	1	1				
12	67F–81841–00	...BEARING	1	1				
13	67F–8183R–00	...GASKET	1	1				
14	6CB–81809–00	..WASHER KIT	1	1				
15	67F–81891–00	.GEAR, RING	1	1				WITH 67F-8183R-00
16	67F–81830–00	.BRACKET, CENTER 2	1	1				
17	60V–8183T–00	.GEAR, IDLER	3	3				
18	6CB–81842–00	.COVER	1	1				
19	6C5–81839–00	.LEVER ASSY	1	1				
20	6C5–81941–00	.STARTER RELAY ASSY	1	1				
21	6C5–81869–00	.COVER, DUST	1	1				
22	6CB–81826–00	.BOLT	2	2				
23	69J–81828–00	.BOLT 2	2	2				
24	67F–81846–00	.SCREW	2	2				

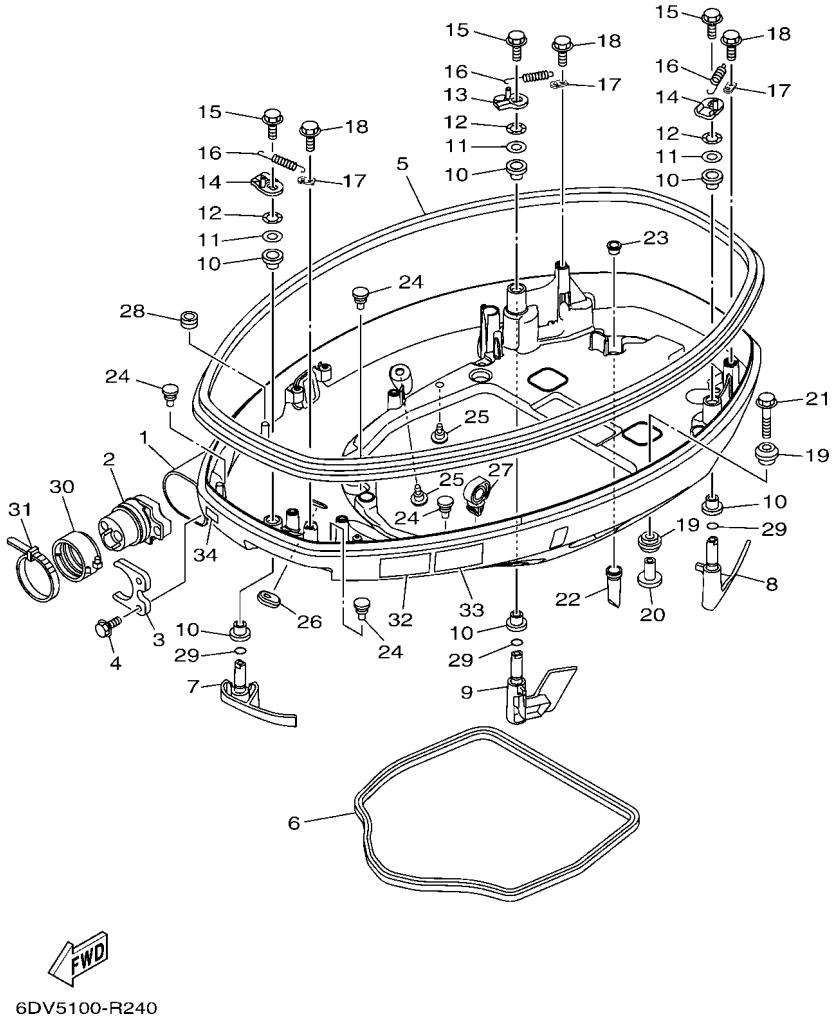

FIG. 23 BOTTOM COWLING 1

REF. NO.	PART NO.	DESCRIPTION	XCA	XCA2				REMARKS
1	6DA–42710–00–8D	BOTTOM COWLING ASSY	1					GRAY
	6DA–42710–00–CE	BOTTOM COWLING ASSY		1				WHITE
2	6CE–42725–03	GROMMET	1	1				
3	6CB–42761–00	STOPPER	1	1				
4	95D95–06014	BOLT, FLANGE DEEP RECESS	2	2				
5	6DA–42615–00	SEAL	1	1				
6	63P–42716–01	RUBBER SEAL 1	1	1				
7	6DA–42815–01–8D	LEVER, CLAMP 1	1					GRAY
	6DA–42815–01–CE	LEVER, CLAMP 1		1				WHITE
8	6DA–42816–02–8D	LEVER, CLAMP 2	1					GRAY
	6DA–42816–02–CE	LEVER, CLAMP 2		1				WHITE
9	6DA–42817–02–8D	LEVER, CLAMP 3	1					GRAY
	6DA–42817–02–CE	LEVER, CLAMP 3		1				WHITE
10	90386–15M73	BUSH	6	6				
11	90201–156J2	WASHER, PLATE	3	3				
12	90206–15M18	WASHER, WAVE	3	3				
13	6CB–42818–00	LEVER, CLAMP 4	1	1				
14	6CB–42819–00	LEVER, CLAMP 5	2	2				
15	95D95–08012	BOLT, FLANGE DEEP RECESS	3	3				
16	90506–22001	SPRING, TENSION	3	3				
17	66T–43144–00	HOOK, SPRING	3	3				
18	95D95–06012	BOLT, FLANGE DEEP RECESS	3	3				
19	90480–22M81	GROMMET	8	8				
20	90387–08M37	COLLAR	4	4				
21	90119–08187	BOLT, WITH WASHER	4	4				
22	6DA–42717–01	RUBBER, SEAL 2	4	4				
23	6DA–42384–00	SEAL, CAP	4	4				

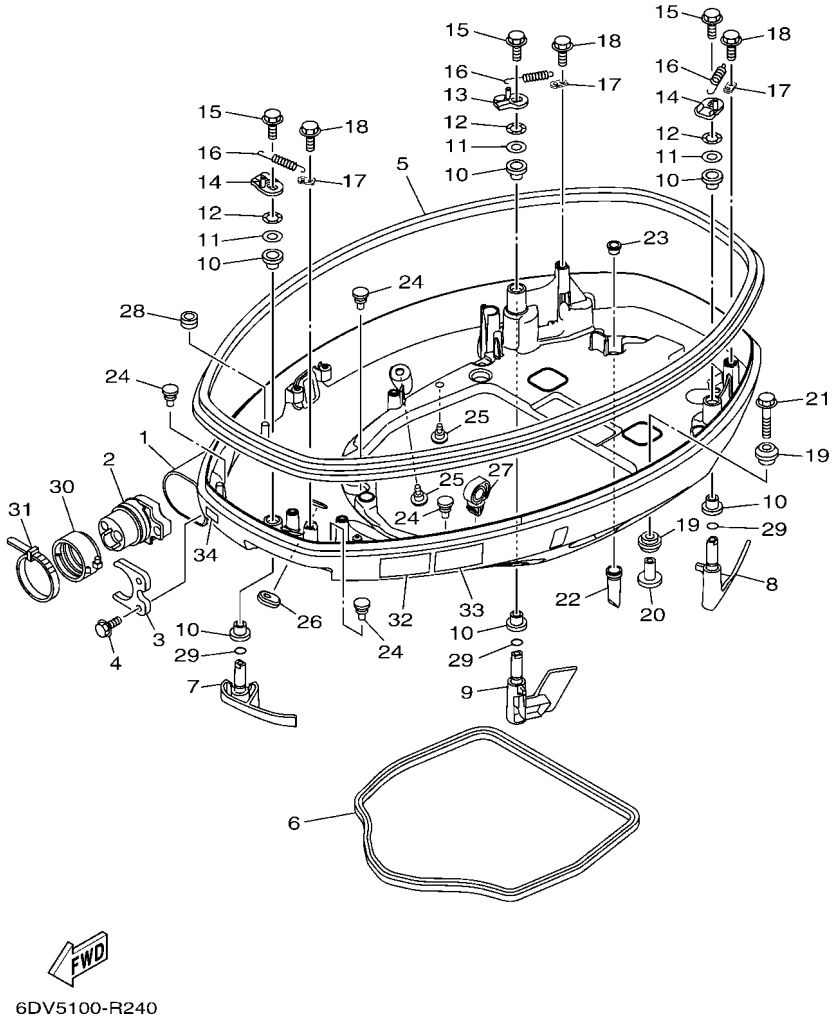

FIG. 23 BOTTOM COWLING 1

REF. NO.	PART NO.	DESCRIPTION	XCA	XCA2				REMARKS
24	6H4–42748–01	GROMMET	4	4				
25	6P2–44391–00	NIPPLE, HOSE	2	2				
26	61A–42727–01	GROMMET	1	1				
27	90464–13249	CLAMP	1	1				
28	90480–13163	GROMMET	1	1				
29	93210–13M63	O-RING	3	3				
30	68F–42753–00	FASTNER	1	1				AP
31	90464–20258	CLAMP	1	1				AP
32	6EE–42794–40	LABEL, WARNING (GENERAL)	1	1				
33	6EE–42794–50	LABEL, WARNING (GENERAL)	1	1				
34	6AH–81996–00	MARK	1	1				

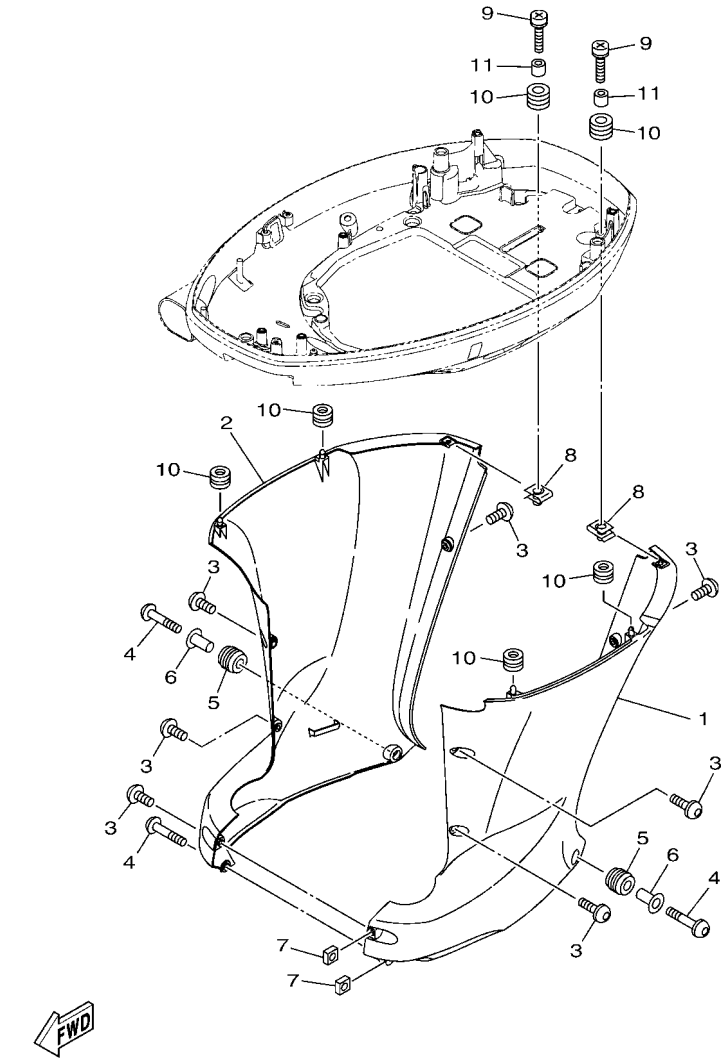

6DB6100-S240

FIG. 24 BOTTOM COWLING 2

REF. NO.	PART NO.	DESCRIPTION	XCA	XCA2				REMARKS
1	6DA–42740–01	APRON COMPLETE 1	1					GRAY X(25.3")
	6DA–42740–01–CE	APRON COMPLETE 1		1				WHITE X(25.3")
2	6DA–42770–01	APRON COMPLETE 2	1					GRAY X(25.3")
	6DA–42770–01–CE	APRON COMPLETE 2		1				WHITE X(25.3")
3	90111–06144	BOLT,HEX. SOCKET BUTTON	7	7				X(25.3")
4	90111–06142	BOLT,HEX. SOCKET BUTTON	3	3				X(25.3")
5	90480–16009	GROMMET	2	2				X(25.3")
6	90387–07028	COLLAR	2	2				X(25.3")
7	90173–06001	NUT, SQUARE	2	2				X(25.3")
8	90183–061A8	NUT, SPRING	2	2				
9	90159–06053	SCREW, WITH WASHER	2	2				
10	90480–13M24	GROMMET	6	6				
11	90387–06M43	COLLAR	2	2				

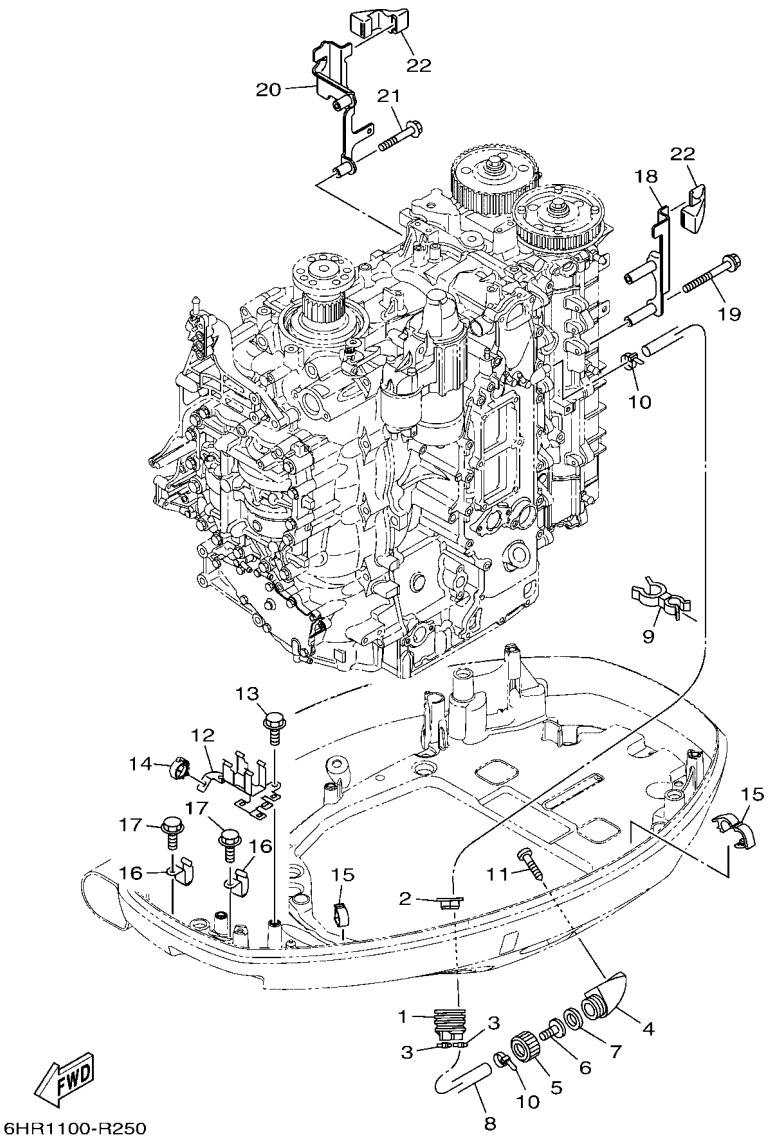

FIG. 25 BOTTOM COWLING 3

REF. NO.	PART NO.	DESCRIPTION	XCA	XCA2				REMARKS
1	6H1–42726–22	GROMMET	1	1				
2	6BG–42384–00	SEAL, CAP	1	1				
3	90465–11M10	CLAMP	2	2				
4	6AW–12572–00	ADAPTER	1	1				
5	6R3–12581–00	JOINT, HOSE 1	1	1				
6	6AW–12582–00	JOINT, HOSE 2	1	1				
7	6R3–12583–00	GASKET, HOSE JOINT	1	1				
8	6DA–42541–00	PIPE 1	1	1				
9	90464–21256	CLAMP	1	1				
10	90465–11M10	CLAMP	2	2				
11	97780–60520	SCREW, TAPPING	2	2				
12	6DV–8366G–00	BRACKET 3	1	1				
13	95D95–06012	BOLT, FLANGE DEEP RECESS	2	2				
14	90464–18246	CLAMP	1	1				
15	90464–18004	CLAMP	2	2				
16	90462–12013	CLAMP	2	2				
17	95D95–06012	BOLT, FLANGE DEEP RECESS	2	2				
18	6DA–11998–00	BRACKET 1	1	1				
19	95D95–06065	BOLT, FLANGE DEEP RECESS	2	2				
20	6DA–11999–00	BRACKET 2	1	1				
21	95D95–06040	BOLT, FLANGE DEEP RECESS	2	2				
22	6CB–42662–02	DAMPER	2	2				

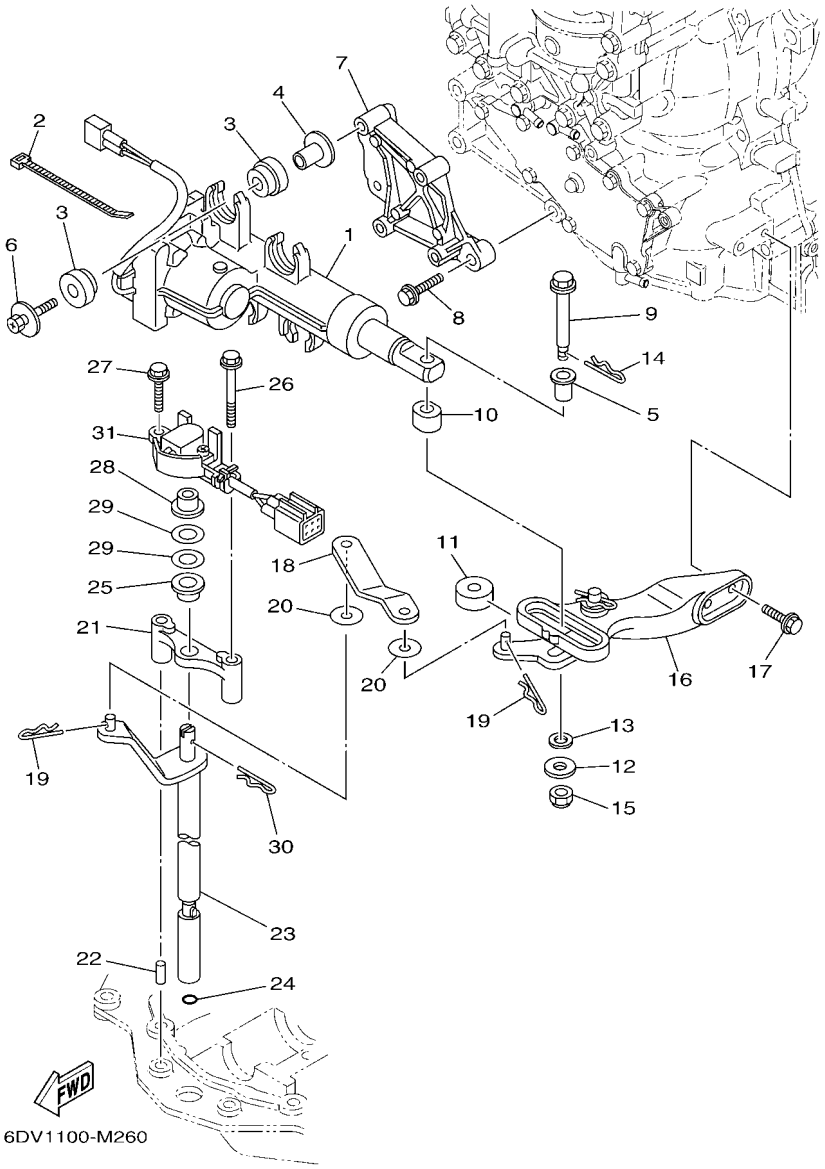

FIG. 26 CONTROL

REF. NO.	PART NO.	DESCRIPTION	XCA	XCA2				REMARKS
1	6DV–4820A–01	ACTUATOR UNIT	1	1				
2	90465–11M10	CLAMP	1	1				
3	6DV–85564–00	GROMMET	8	8				
4	90387–06176	COLLAR	4	4				
5	90386–08008	BUSH	1	1				
6	68F–85119–00	BOLT	4	4				
7	6DV–44142–00	JOINT	1	1				
8	95D75–08030	BOLT, FLANGE DEEP RECESS	3	3				
9	6DV–42195–00	PIN, JOINT 1	1	1				
10	6DV–44122–00	BUSHING, SHIFT ROD LEVER	1	1				
11	6DV–44132–00	BUSHING	1	1				
12	90201–06068	WASHER, PLATE	1	1				
13	90202–08M41	WASHER, PLATE	1	1				
14	90468–18008	CLIP	1	1				
15	90185–06M07	NUT, SELF-LOCKING	1	1				
16	6DV–44100–00	SHIFT LINK ASSY	1	1				
17	97E75–06520	BOLT, HEXAGON W/W DEEP RECESS	2	2				
18	6DV–44121–00	LEVER, SHIFT ROD	1	1				
19	90468–18008	CLIP	2	2				
20	90202–06015	WASHER, PLATE	2	2				
21	6DV–44118–00	BRACKET	1	1				
22	93604–09066	PIN, DOWEL	1	1				
23	6DV–44120–02	HANDLE GEAR SHIFT ASSY	1	1				X(25.3")
24	93210–09165	O-RING	1	1				
25	90386–10001	BUSH	1	1				
26	97E95–06550	BOLT, HEXAGON W/W DEEP RECESS	1	1				
27	97E75–06520	BOLT, HEXAGON W/W DEEP RECESS	1	1				

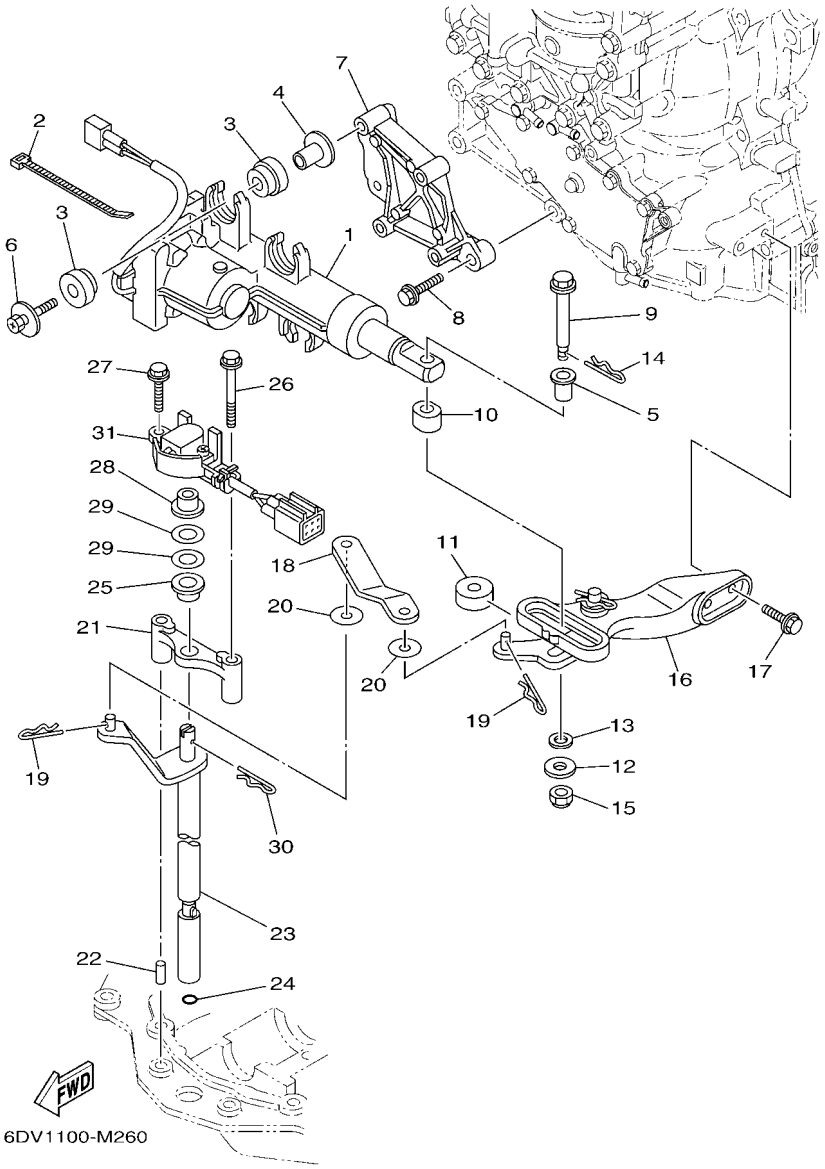

FIG. 26 CONTROL

REF. NO.	PART NO.	DESCRIPTION	XCA	XCA2				REMARKS
28	90386–10001	BUSH	1	1				
29	90201–11008	WASHER, PLATE	2	2				
30	90468–180A0	CLIP	1	1				
31	6DV–68303–00	SENSOR ASSY	1	1				

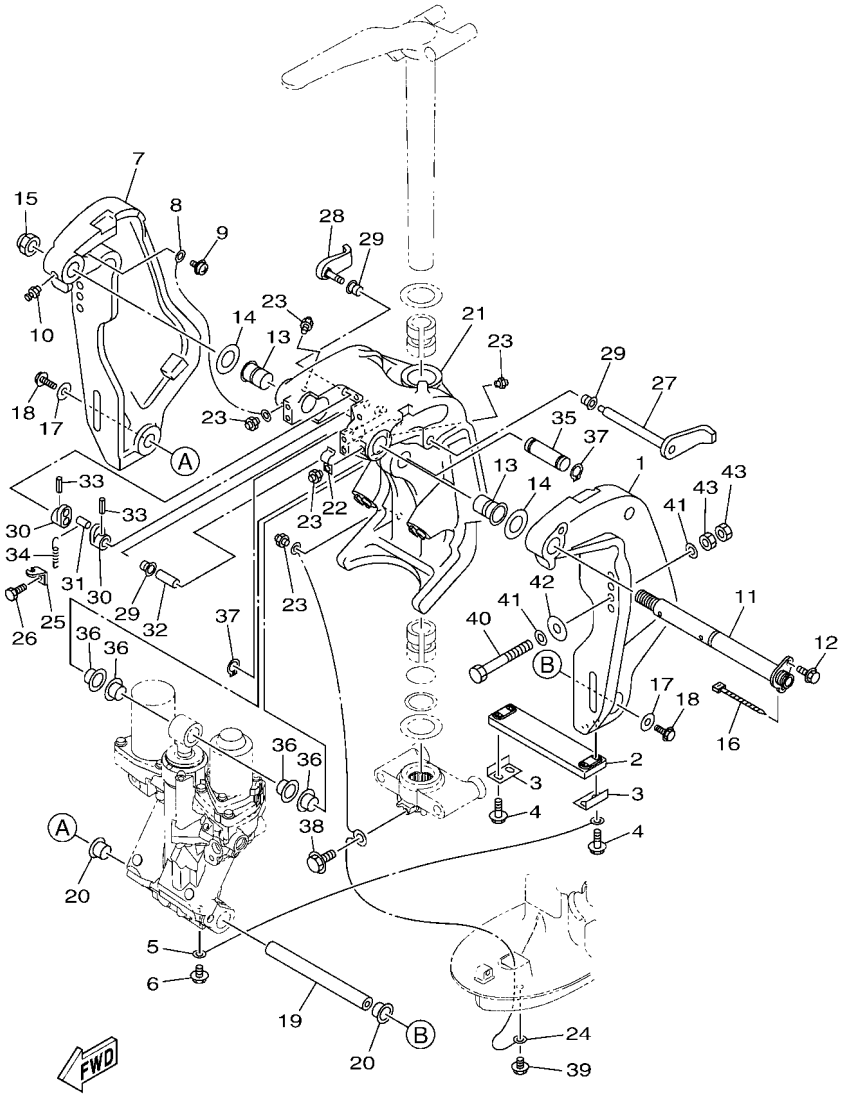

FIG. 27 BRACKET 1

REF. NO.	PART NO.	DESCRIPTION	XCA	XCA2				REMARKS
1	64E–43111–02–8D	BRACKET, CLAMP 1	1					GRAY
	64E–43111–02–CE	BRACKET, CLAMP 1		1				WHITE
2	6AW–45251–00	ANODE	1	1				
3	6G5–44526–00	PLATE	2	2				
4	97E95–06530	BOLT, HEXAGON W/W DEEP RECESS	4	4				
5	6E5–82148–00	WIRE, LEAD 4	1	1				
6	97E95–06510	BOLT, HEXAGON W/W DEEP RECESS	1	1				
7	64E–43112–02–8D	BRACKET, CLAMP 2	1					GRAY
	64E–43112–02–CE	BRACKET, CLAMP 2		1				WHITE
8	6E5–82148–00	WIRE, LEAD 4	1	1				
9	97985–06212	SCREW, WITH WASHER	1	1				
10	93700–06002	NIPPLE, GREASE	1	1				
11	64E–43131–30	BOLT, CLAMP BRACKET	1	1				
12	97E95–08520	BOLT, HEXAGON W/W DEEP RECESS	1	1				
13	90386–25M31	BUSH	2	2				
14	90201–26M59	WASHER, PLATE	2	2				
15	90185–22M11	NUT, SELF-LOCKING	1	1				
16	90465–11M10	CLAMP	1	1				
17	90201–10060	WASHER, PLATE	2	2				
18	90119–10054	BOLT, WITH WASHER	2	2				
19	6BC–43818–00	PIN, LOWER SHOCK MOUNT	1	1				
20	90386–22M98	BUSH	2	2				
21	64E–43311–20–8D	BRACKET, SWIVEL 1	1					GRAY X(25.3")
	64E–43311–20–CE	BRACKET, SWIVEL 1		1				WHITE X(25.3")
22	90465–08M63	CLAMP	1	1				
23	93700–06002	NIPPLE, GREASE	5	5				
24	6DA–82149–00	WIRE, LEAD 3	1	1				X(25.3")

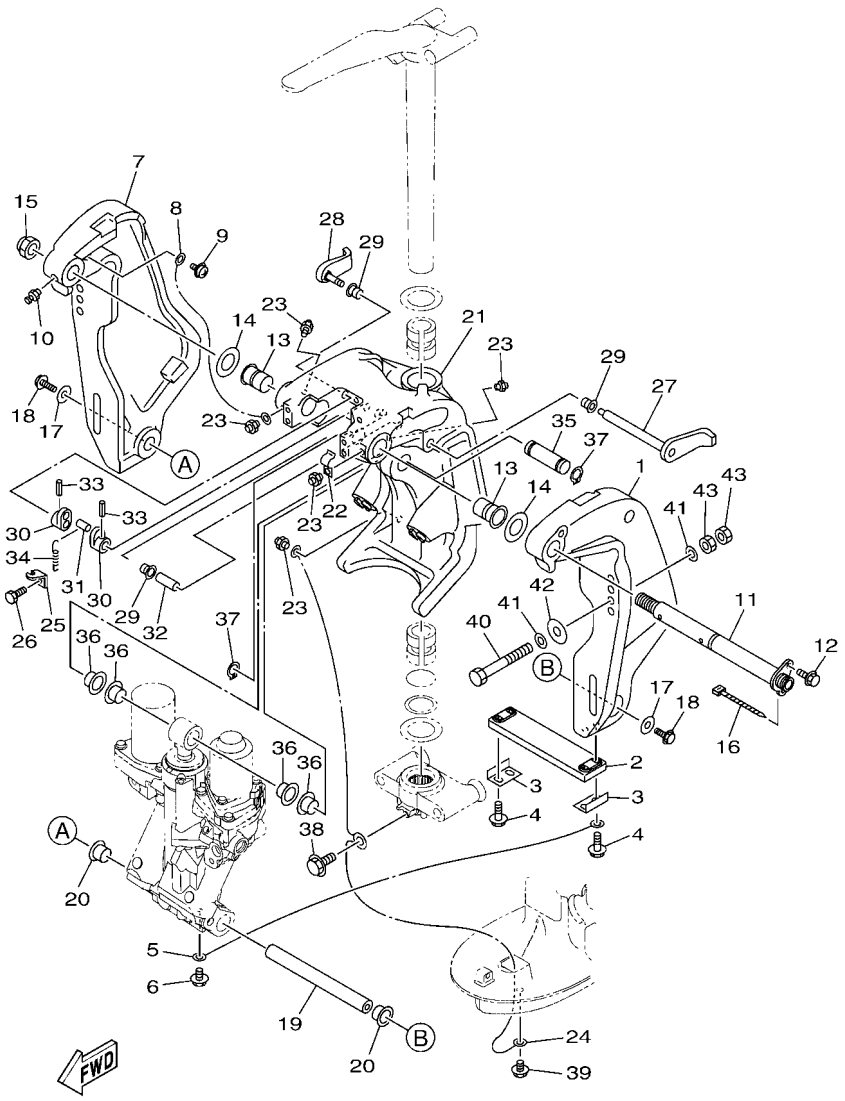

6EH8100-U270

FIG. 27 BRACKET 1

REF. NO.	PART NO.	DESCRIPTION	XCA	XCA2				REMARKS
25	6G5–43144–00	HOOK, SPRING	1	1				
26	97D95–06010	BOLT, HEXAGON DEEP RECESS	1	1				
27	6G5–43181–02	LEVER, TILT STOP 1	1	1				
28	6G5–43185–02	LEVER, TILT STOP 2	1	1				
29	90386–10M16	BUSH	3	3				
30	6G5–43148–00	COLLAR, DISTANCE	2	2				
31	90249–06M19	PIN	1	1				
32	90387–10M05	COLLAR	1	1				
33	91690–30020	PIN, SPRING	2	2				
34	90506–16003	SPRING, TENSION	1	1				
35	64E–43126–10	PIN, UPPER SHOCK MOUNT	1	1				
36	90386–22M98	BUSH	4	4				
37	93410–22M11	CIRCLIP	2	2				
38	95D95–06010	BOLT, FLANGE DEEP RECESS	1	1				X(25.3")
39	95D95–06010	BOLT, FLANGE DEEP RECESS	1	1				
40	90101–12065	BOLT (L:130MM)	2	2				UR
	90101–12066	BOLT (L:150MM)	2	2				UR
41	90201–13M01	WASHER, PLATE	8	8				
42	90201–12426	WASHER, PLATE	4	4				
43	95380–12600	NUT	8	8				

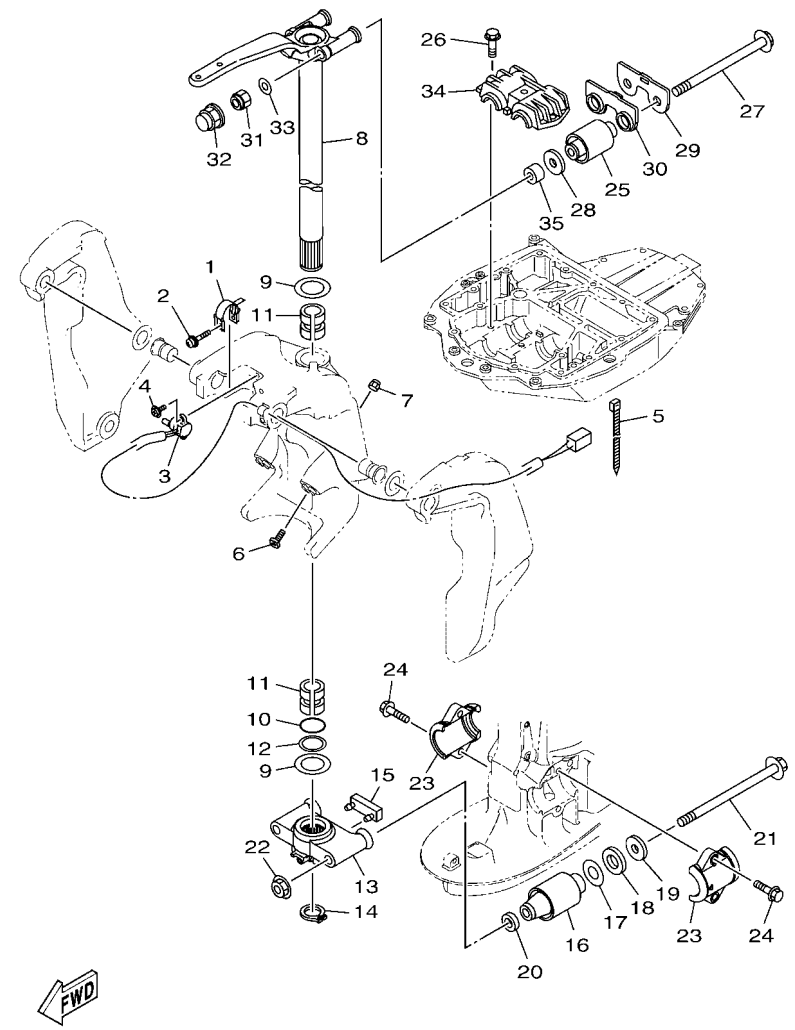

6EH7100-T280

FIG. 28 BRACKET 2

REF. NO.	PART NO.	DESCRIPTION	XCA	XCA2				REMARKS
1	64E–43139–11	CAM, TRIM SENDER	1	1				
2	90159–05059	SCREW, WITH WASHER	1	1				
3	67H–83672–02	TRIM SENDER	1	1				
4	97985–06216	SCREW, WITH WASHER	2	2				
5	90465–11M10	CLAMP	3	3				
6	61A–43376–00	BOLT, THRUST RECEIVER	2	2				
7	95780–10300	NUT, FLANGE	2	2				
8	6DA–42510–00–8D	STEERING BRACKET ASSY	1					GRAY X(25.3")
	6DA–42510–00–CE	STEERING BRACKET ASSY		1				WHITE X(25.3")
9	90201–38M60	WASHER, PLATE	2	2				
10	93210–37MH7	O-RING	1	1				
11	90386–38M32	BUSH	2	2				
12	90202–40M47	WASHER, PLATE	1	1				
13	6DA–44551–00–CA	HOUSING, LOWER MOUNT RUBBER 1	1	1				X(25.3")
14	93410–37M04	CIRCLIP	1	1				
15	6DA–44575–00	DAMPER, LOWER MOUNT RUBBER	1	1				X(25.3")
16	63P–44555–00	MOUNT DAMPER, LOWER SIDE	2	2				X(25.3")
17	90201–35008	WASHER, PLATE	2	2				
18	90202–32M19	WASHER, PLATE	2	2				
19	90201–16M55	WASHER, PLATE	2	2				
20	90201–15M58	WASHER, PLATE	2	2				
21	90105–14012	BOLT, FLANGE	2	2				X(25.3")
22	95604–14200	NUT, SELF-LOCKING	2	2				X(25.3")
23	6DA–44552–00–CA	HOUSING, LOWER MOUNT RUBBER 2	2	2				X(25.3")
24	90119–10058	BOLT, WITH WASHER	4	4				
25	6DA–44514–00	MOUNT DAMPER, UPPER SIDE	2	2				
26	90119–10024	BOLT, WITH WASHER	3	3				

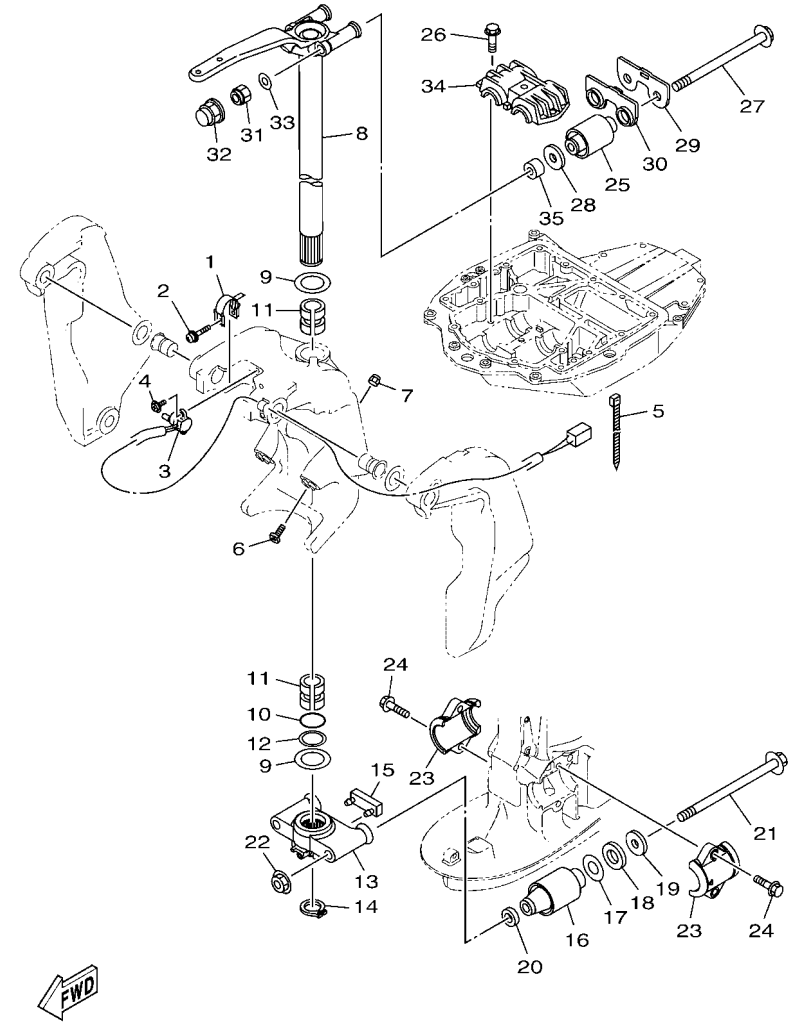

6EH7100-T280

FIG. 28 BRACKET 2

REF. NO.	PART NO.	DESCRIPTION	XCA	XCA2				REMARKS
27	90105–14009	BOLT, FLANGE	2	2				
28	90201–16M01	WASHER, PLATE	2	2				
29	6DA–44526–00	PLATE	1	1				
30	6DA–44532–00	STOPPER, UPPER MOUNT	1	1				
31	90185–14M00	NUT, SELF-LOCKING	2	2				
32	6DA–44194–00	CAP	2	2				
33	92995–14600	WASHER	2	2				
34	63P–44511–00	COVER, UPPER MOUNT	1	1				
35	90387–14004	COLLAR	2	2				

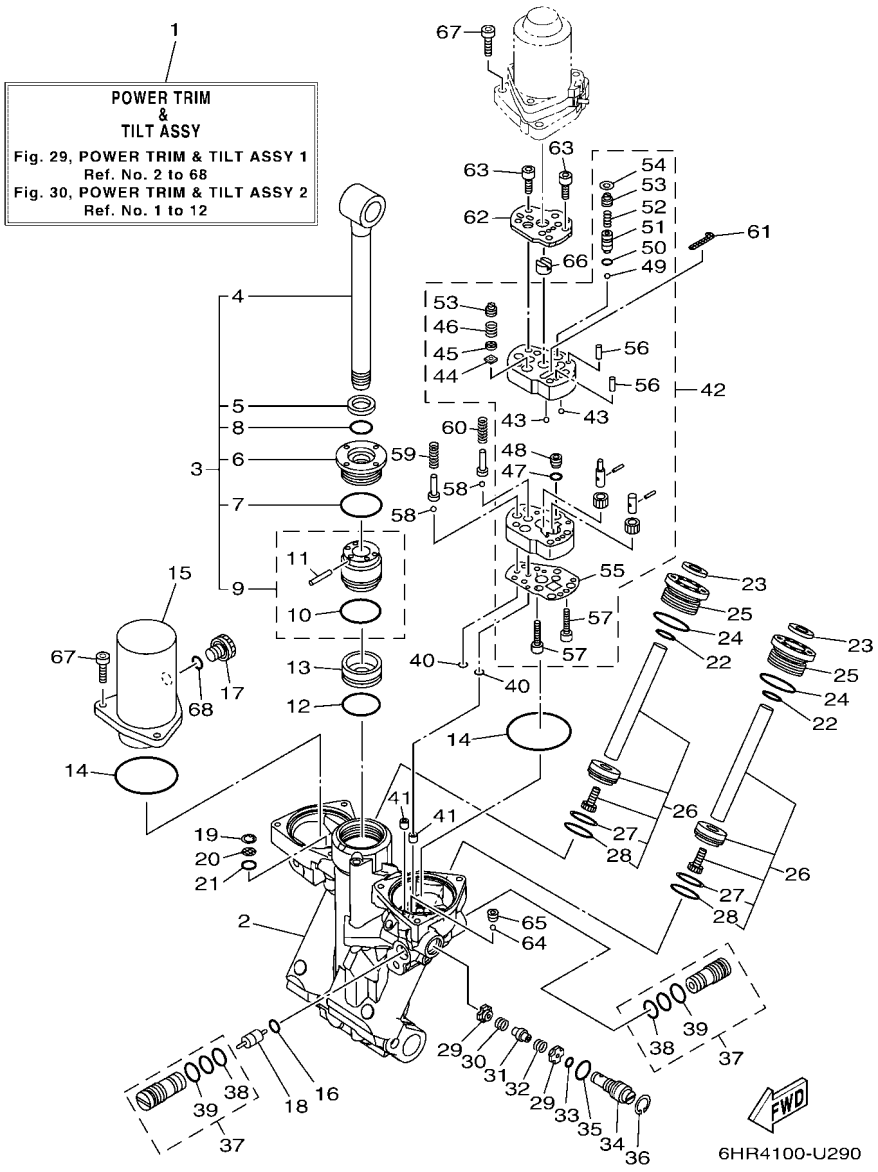

FIG. 29 POWER TRIM & TILT ASSY 1

REF. NO.	PART NO.	DESCRIPTION	XCA	XCA2				REMARKS
1	63P–43800–21	POWER TRIM & TILT ASSY	1	1				
2	63P–4380L–21	HOUSING, TRIM & TILT SUB ASSY	1	1				
3	63P–43810–21	TILT PISTON SUB ASSY	1	1				
4	63P–43801–10	.ROD	1	1				
5	93106–19001	.OIL SEAL	1	1				
6	63P–43811–20	.SCREW, CYLINDER END	1	1				
7	63P–43861–20	.O-RING	1	1				
8	63P–43863–10	.O-RING	1	1				
9	63P–4380P–20	.PISTON SUB ASSY	1	1				
10	6H1–43862–00	..O-RING	1	1				
11	91609–16010	..PIN, SPRING	1	1				
12	6H1–43862–00	O-RING	1	1				
13	63P–43814–20	PISTON, FREE	1	1				
14	93210–68N50	O-RING	2	2				
15	63P–4382C–20	BODY, RESERVOIR 2	1	1				
16	93210–09165	O-RING	1	1				
17	6CJ–43829–10	PLUG, RESERVOIR	1	1				
18	6H1–43841–11	PISTON, SHUTTLE	1	1				
19	63P–43876–10	RING, SNAP	1	1				
20	63P–43816–10	FILTER 1	1	1				
21	93210–11N52	O-RING	1	1				
22	6D8–43863–00	O-RING	2	2				
23	63P–43812–20	SEAL, DUST	2	2				
24	63P–43862–10	O-RING	2	2				
25	63P–43821–21	SCREW, TRIM CYLINDER END	2	2				
26	63P–43820–20	TRIM PISTON SUB ASSY	2	2				
27	62X–43871–00	.RING, BACK UP	1	1				

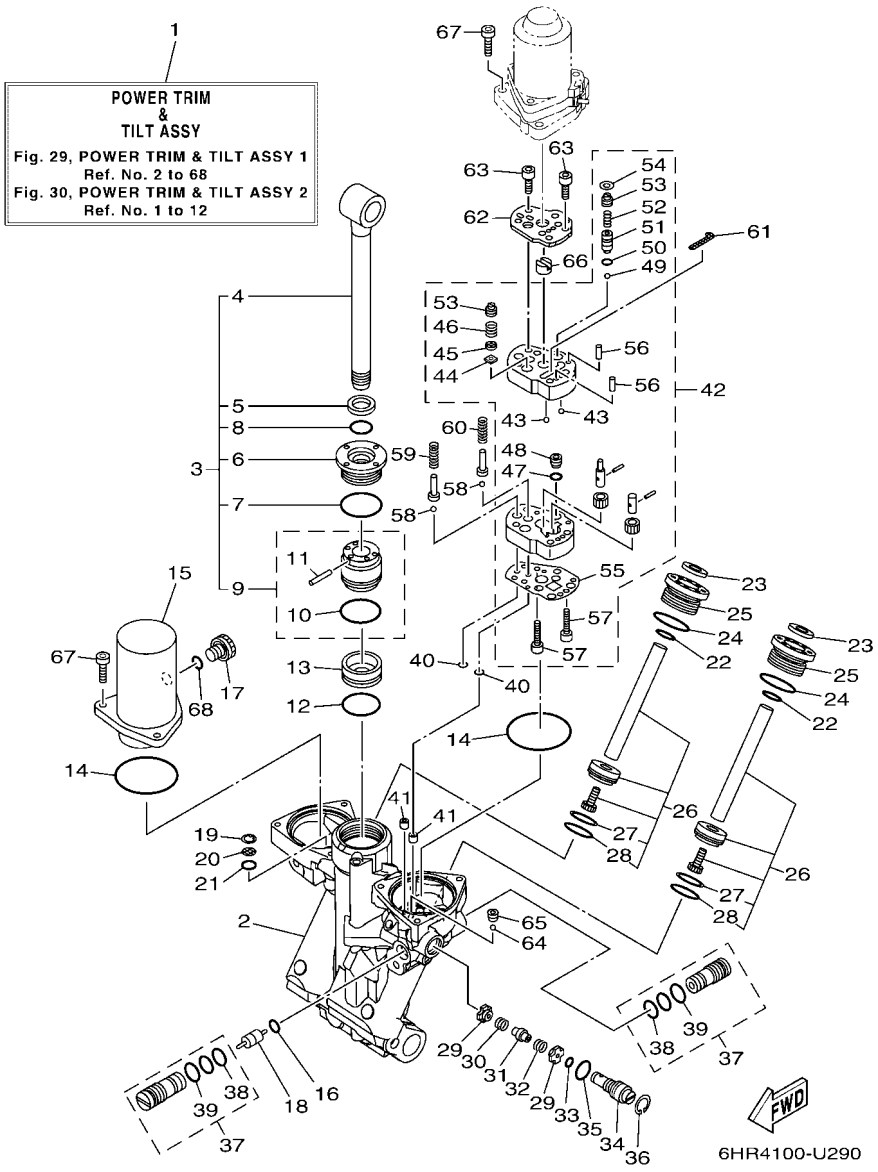

FIG. 29 POWER TRIM & TILT ASSY 1

REF. NO.	PART NO.	DESCRIPTION	XCA	XCA2				REMARKS
28	93210–29375	.O-RING	1	1				
29	63P–43847–10	SEAT, MANUAL VALVE	2	2				
30	63P–43854–10	SPRING, MANUAL RELEASE	1	1				
31	63P–4382A–10	ADAPTOR 1	1	1				
32	63P–4384H–10	SPRING	1	1				
33	69J–4389J–00	O-RING	1	1				
34	63P–43845–20	SCREW, MANUAL RELEASE	1	1				
35	93210–12327	O-RING	1	1				
36	61A–43876–01	RING, SNAP	1	1				
37	63P–43802–20	VALVE SUB ASSY	2	2				
38	93210–12N52	.O-RING	1	1				
39	6H1–43866–01	.O-RING	1	1				
40	93210–064A5	O-RING	2	2				
41	63P–4381C–20	FILTER 3	2	2				
42	63P–43830–20	GEAR PUMP ASSY	1	1				
43	93503–16003	.BALL	2	2				
44	6H1–4384G–11	.SEAL, RELIEF VALVE	1	1				
45	6H1–43844–10	.PIN, VALVE SUPPORT	1	1				
46	6H1–43856–10	.SPRING, DOWN RELIEF	1	1				
47	93210–07N51	.O-RING	1	1				
48	63P–43851–20	.SEAT, RELIEF VALVE	1	1				
49	93501–08001	.BALL	1	1				
50	93210–064A5	.O-RING	1	1				
51	63P–43844–20	.PIN, VALVE SUPPORT	1	1				
52	69J–43855–00	.SPRING, UP RELIEF	1	1				
53	63P–43843–10	.SCREW, VALVE LOCK	2	2				
54	63P–43338–10	.WASHER, WAVE	1	1				

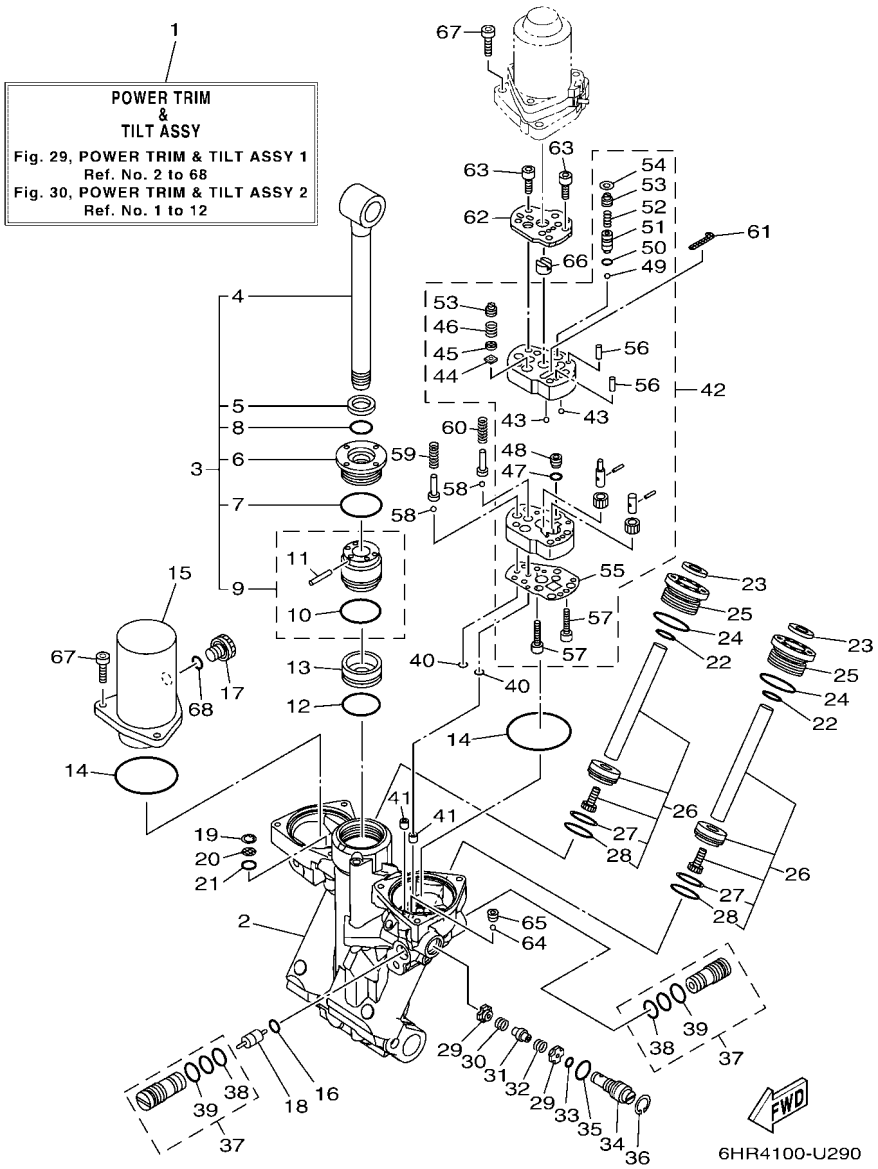

FIG. 29 POWER TRIM & TILT ASSY 1

REF. NO.	PART NO.	DESCRIPTION	XCA	XCA2				REMARKS
55	63P–4384G–20	.SEAL, RELIEF VALVE	1	1				
56	93604–10011	.PIN, DOWEL	2	2				
57	91312–04020	.BOLT, HEXAGON SOCKET HEAD	2	2				
58	93501–08001	BALL	2	2				
59	63P–43857–10	SPRING, ABSORBER VALVE	1	1				
60	63P–4385H–10	SPRING, SEAL	1	1				
61	6CJ–43816–00	FILTER 1	1	1				
62	63P–4381J–10	PLATE	1	1				
63	91312–05035	BOLT, HEXAGON SOCKET HEAD	4	4				
64	93505–32038	BALL	1	1				
65	61A–43878–00	BOLT, SOCKET	1	1				
66	69J–43831–00	CONNECTOR, SHAFT	1	1				
67	91380–06025	BOLT	6	6				
68	6CJ–43861–10	O-RING	1	1				

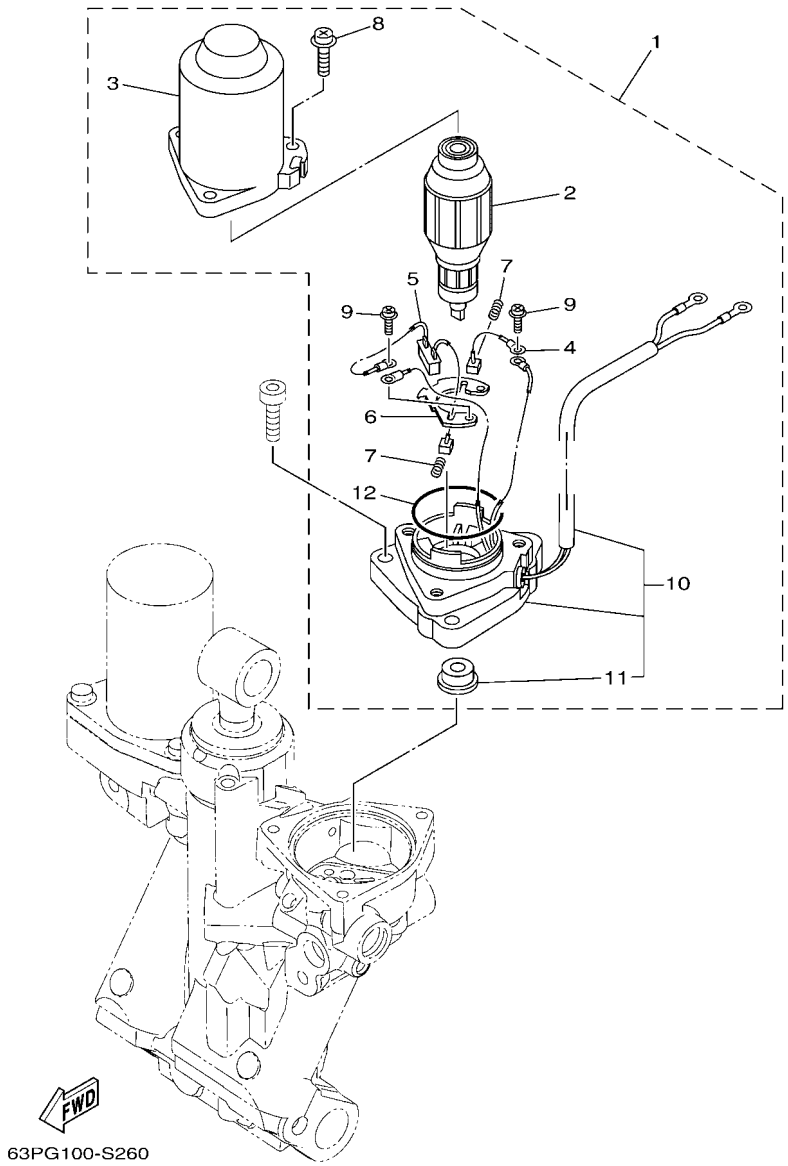

FIG. 30 POWER TRIM & TILT ASSY 2

REF. NO.	PART NO.	DESCRIPTION	XCA	XCA2				REMARKS
1	63P–43880–22	MOTOR ASSY	1	1				
2	6EK–43805–01	.ARMATURE ASSY	1	1				
3	6EK–43804–11	.STATOR ASSY	1	1				
4	6EK–43892–00	.BRUSH 2	1	1				
5	63P–82181–20	.CIRCUIT BREAKER COMP.	1	1				
6	6EK–4380F–00	.PLATE, BRUSH HOLDER	1	1				
7	62X–4386K–00	.SPRING, BRUSH	2	2				
8	63P–43879–10	.SCREW, WITH WASHER	3	3				
9	97602–04316	.SCREW, PAN HEAD WITH WASHER	2	2				
10	63P–43881–21	.FRAME, END	1	1				
11	6EK–43882–00	..OIL SEAL	1	1				
12	6EK–43862–00	.O-RING	1	1				

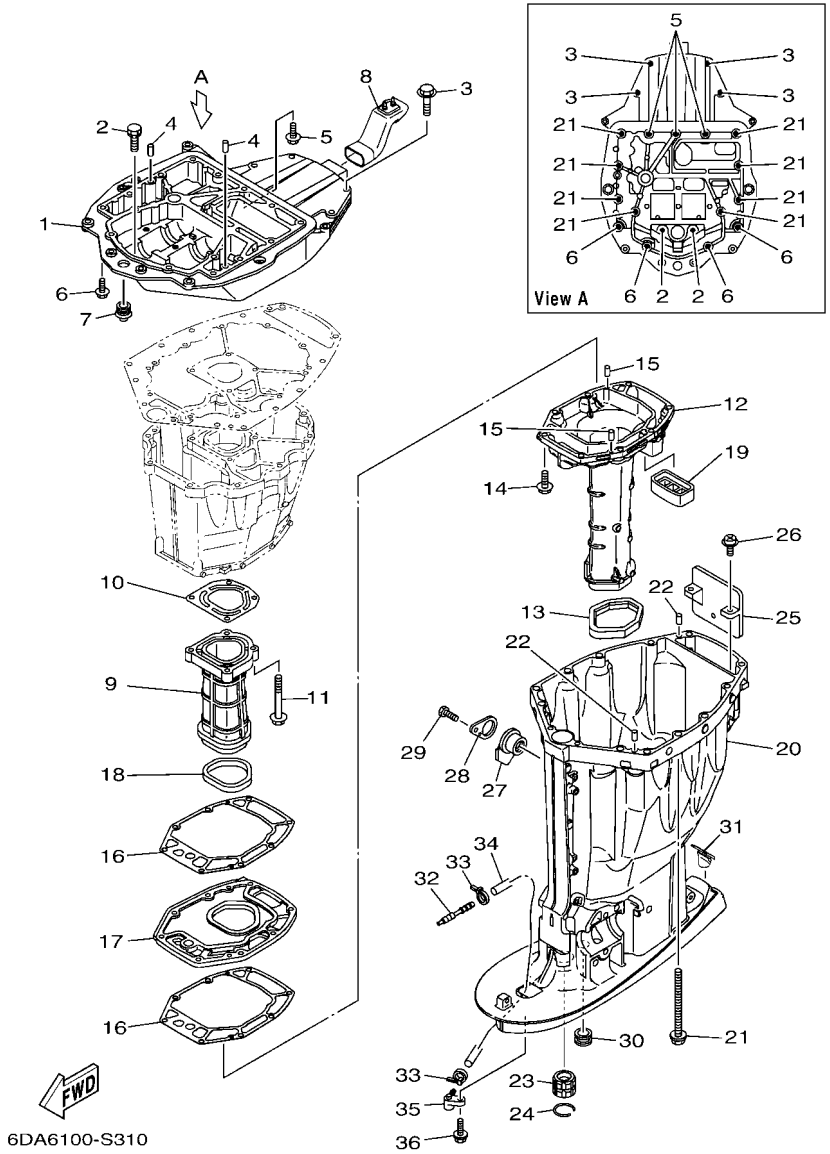

FIG. 31 UPPER CASING

REF. NO.	PART NO.	DESCRIPTION	XCA	XCA2				REMARKS
1	63P–41137–05	GUIDE, EXHAUST	1	1				
2	90119–08182	BOLT, WITH WASHER	2	2				
3	97E75–10545	BOLT, HEXAGON W/W DEEP RECESS	4	4				
4	93608–16M16	PIN, DOWEL	2	2				
5	90119–08189	BOLT, WITH WASHER	3	3				
6	97E75–10535	BOLT, HEXAGON W/W DEEP RECESS	4	4				
7	6E5–42724–01	GROMMET	1	1				
8	6DA–42769–01	SEAL, RUBBER	1	1				
9	63P–41131–02	MANIFOLD, EXT. 1	1	1				
10	63P–41133–A0	GASKET, EXHAUST MANIFOLD 1	1	1				
11	97E75–08560	BOLT, HEXAGON W/W DEEP RECESS	4	4				
12	6DA–14711–01	MUFFLER 1	1	1				X(25.3")
13	69J–45123–00	GASKET, MUFFLER	1	1				
14	97E75–08535	BOLT, HEXAGON W/W DEEP RECESS	8	8				
15	93606–19M23	PIN, DOWEL	2	2				
16	63P–41134–A1	GASKET, EXHAUST MANIFOLD	2	2				
17	63P–45181–02	PLATE	1	1				
18	63P–41138–00	SEAL, EXT. 1	1	1				
19	69J–45127–01	SEAL	1	1				
20	6DA–45111–00–8D	CASING, UPPER	1					GRAY X(25.3")
	6DA–45111–00–CE	CASING, UPPER		1				WHITE X(25.3")
21	90119–10007	BOLT, WITH WASHER	8	8				
22	93608–16M16	PIN, DOWEL	2	2				
23	6E5–45318–00	BUSHING, DRIVE SHAFT	1	1				
24	93420–36M01	CIRCLIP	1	1				
25	69J–14624–01	COVER, EXHAUST	1	1				
26	97980–06216	SCREW, WITH WASHER	2	2				

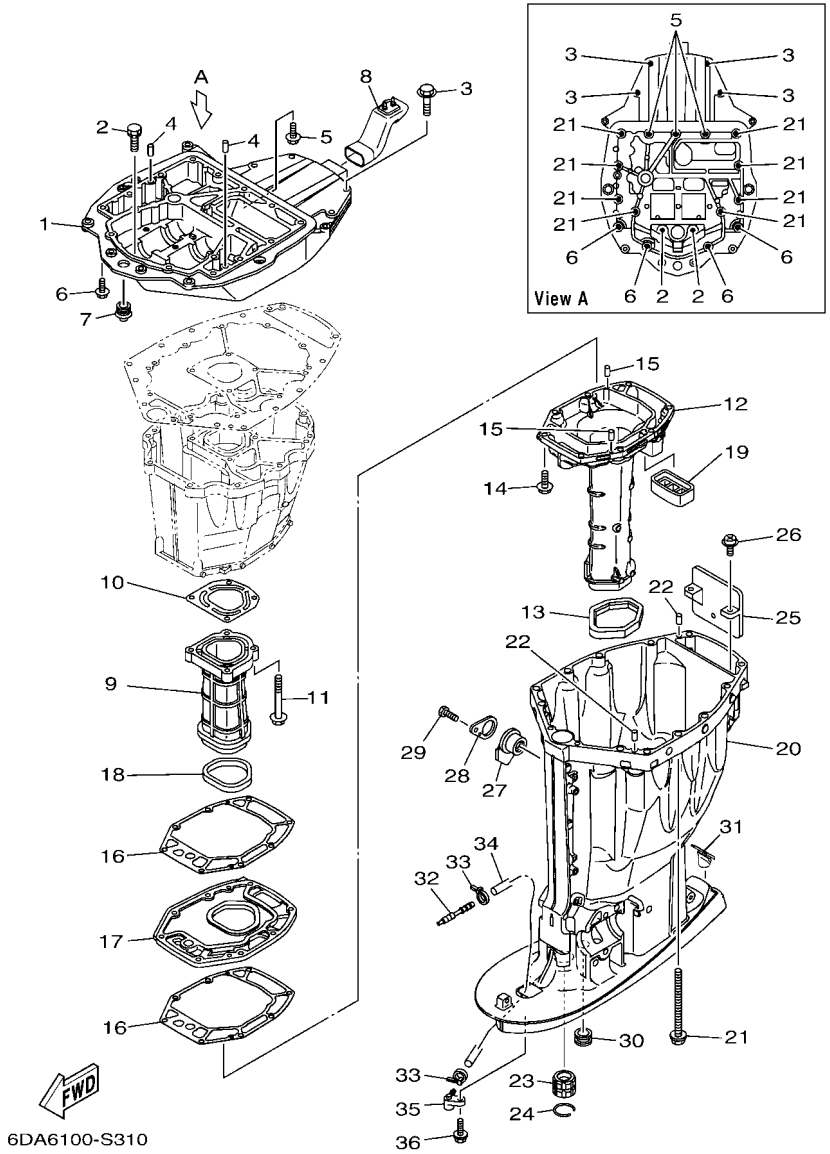

FIG. 31 UPPER CASING

REF. NO.	PART NO.	DESCRIPTION	XCA	XCA2				REMARKS
27	6BB–15316–01	DAMPER 1	1	1				X(25.3")
28	6BB–45152–01	COVER, UPPER CASING 2	1	1				X(25.3")
29	97D95–06012	BOLT, HEXAGON DEEP RECESS	1	1				X(25.3")
30	6E5–44366–01	DAMPER, WATER SEAL 2	1	1				
31	6DA–45155–01	CAP	1	1				X(25.3")
32	6E5–83558–00	END, NIPPLE	1	1				
33	90465–11M10	CLAMP	2	2				
34	90445–07018	HOSE (L1400)	1	1				X(25.3")
35	63P–45379–00	NIPPLE, HOSE	1	1				
36	90119–06287	BOLT, WITH WASHER	1	1				

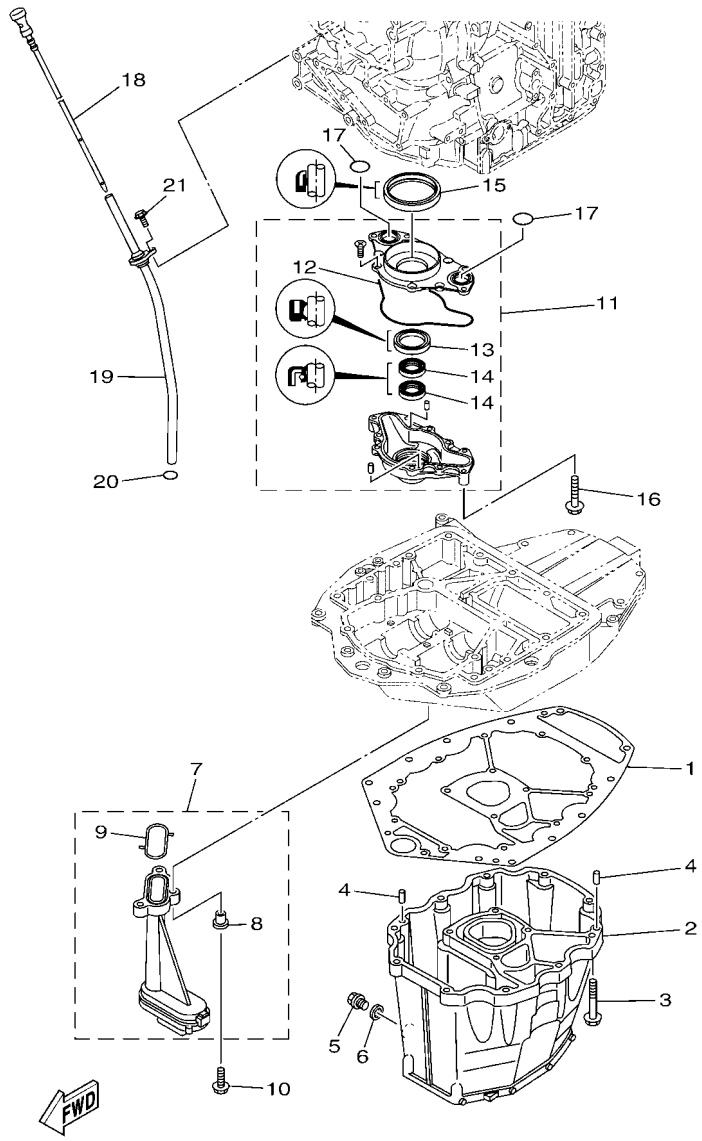

FIG. 32 OIL PAN

REF. NO.	PART NO.	DESCRIPTION	XCA	XCA2				REMARKS
1	63P–15312–02	GASKET, OIL PAN	1	1				
2	6DA–15311–01	OIL PAN	1	1				X(25.3")
3	97E75–08535	BOLT, HEXAGON W/W DEEP RECESS	10	10				
4	93608–16M16	PIN, DOWEL	2	2				
5	90340–14M06	PLUG, STRAIGHT SCREW	1	1				
6	90430–14M09	GASKET	1	1				
7	63P–13411–00	STRAINER, OIL	1	1				
8	90387–06263	.COLLAR	3	3				
9	63P–13415–00	.SEAL, OIL STRAINER	1	1				
10	95812–06025	BOLT, FLANGE	3	3				
11	6DA–13300–00	OIL PUMP ASSY	1	1				
12	6DA–13329–00	.GASKET, PUMP COVER	1	1				
13	6AW–13119–00	.OIL SEAL	1	1				
14	69J–13631–00	.OIL SEAL	2	2				
15	6CB–11355–00	SEAL, CYLINDER 1	1	1				
16	97E75–06540	BOLT, HEXAGON W/W DEEP RECESS	4	4				
17	93210–25552	O-RING	2	2				
18	6DA–15362–00	PLUG, OIL LEVEL	1	1				
19	6DA–15377–00	GUIDE, INLET	1	1				
20	93210–19MJ3	O-RING	1	1				
21	95D95–06016	BOLT, FLANGE DEEP RECESS	1	1				

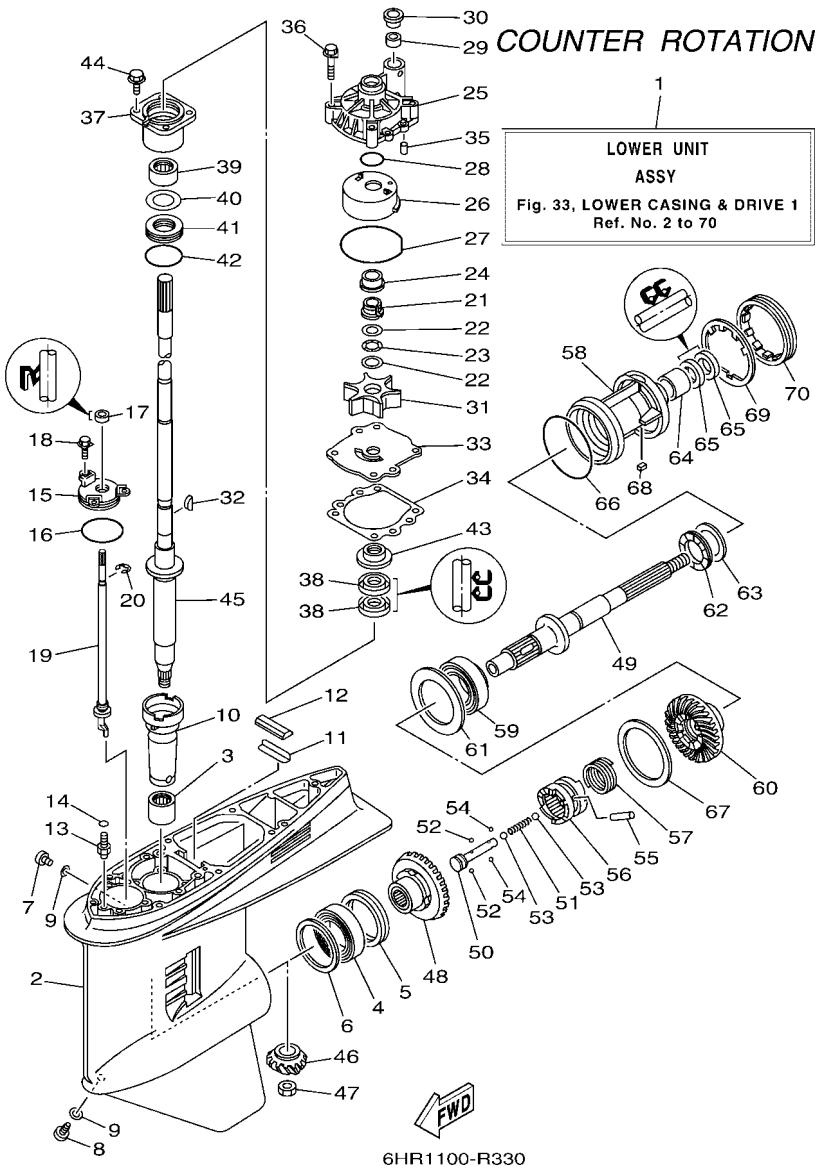

FIG. 33 LOWER CASING & DRIVE 1

REF. NO.	PART NO.	DESCRIPTION	XCA	XCA2				REMARKS
1	6HR–45300–13–8D	LOWER UNIT ASSY	1					GRAY X(25.3"),LH
	6HR–45300–13–CE	LOWER UNIT ASSY		1				WHITE X(25.3"),LH
2	6J9–45301–07–8D	CASING, LOWER	1					GRAY
	6J9–45301–07–CE	CASING, LOWER		1				WHITE
3	93311–928U5	BEARING	1	1				
4	93390–000U2	BEARING	1	1				
5	93341–465U4	BEARING	1	1				
6	6G5–45567–01	SHIM (T:0.10MM)	1	1				UR
	6G5–45567–10	SHIM (T:0.12MM)	1	1				UR
	6G5–45567–20	SHIM (T:0.15MM)	1	1				UR
	6G5–45567–30	SHIM (T:0.18MM)	1	1				UR
	6G5–45567–40	SHIM (T:0.30MM)	1	1				UR
	6G5–45567–50	SHIM (T:0.40MM)	1	1				UR
	6G5–45567–60	SHIM (T:0.50MM)	1	1				UR
7	90340–08002	PLUG, STRAIGHT SCREW	1	1				
8	688–45341–10	PLUG, DRAIN	1	1				
9	90430–08003	GASKET	2	2				
10	6G5–45536–01	SLEEVE, DRIVE SHAFT	1	1				
11	663–45376–00	GUIDE, SEAL DAMPER	1	1				
12	688–45375–00	DAMPER, SEAL	1	1				
13	63P–45378–00	NIPPLE, HOSE	1	1				
14	93210–07003	O-RING	1	1				
15	6E5–45321–00	PLATE	1	1				
16	93210–58144	O-RING	1	1				
17	93106–09014	OIL SEAL	1	1				
18	90119–06286	BOLT, WITH WASHER	3	3				
19	64P–44150–01	SHIFT CAM ASSY	1	1				

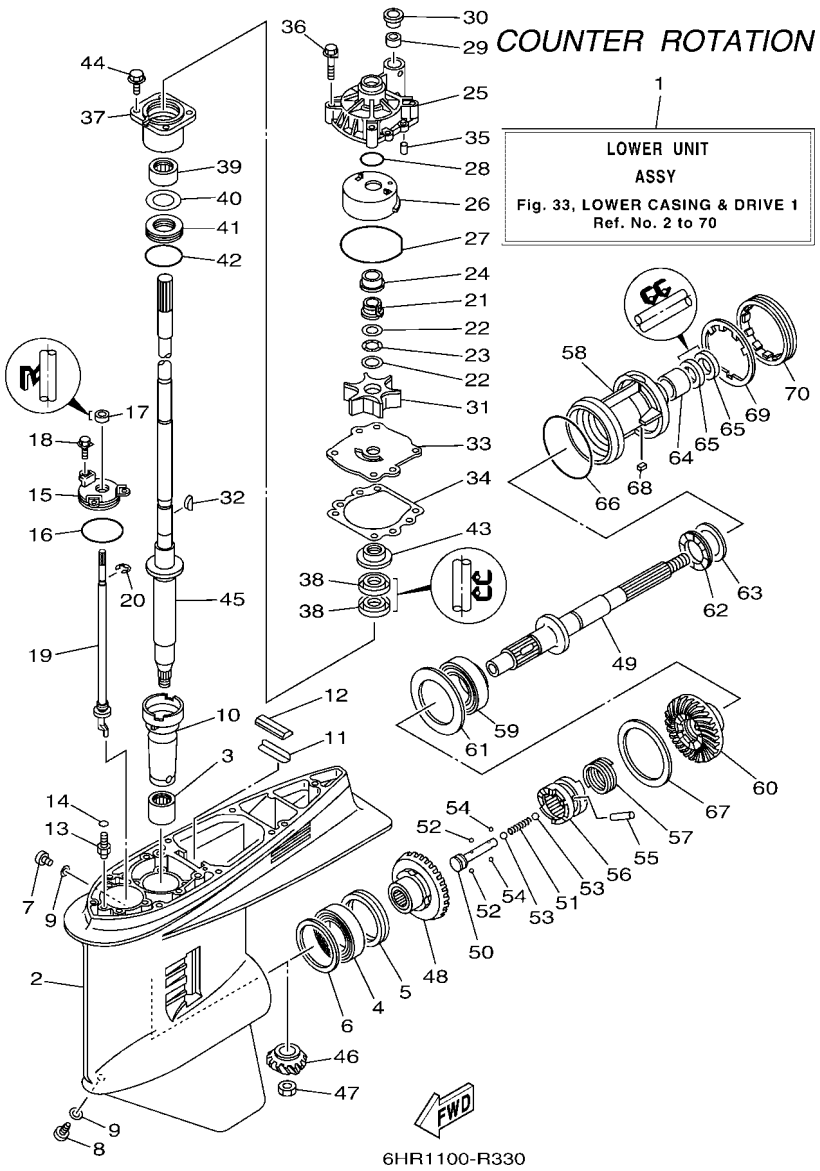

FIG. 33 LOWER CASING & DRIVE 1

REF. NO.	PART NO.	DESCRIPTION	XCA	XCA2				REMARKS
20	99001–08600	CIRCLIP	1	1				
21	61A–45538–00	SPACER 1	1	1				
22	90201–22M01	WASHER, PLATE	2	2				
23	90206–22M19	WASHER, WAVE	1	1				
24	61A–45527–00	COLLAR, DRIVE SHAFT	1	1				
25	61A–44311–01	HOUSING, WATER PUMP	1	1				
26	61A–44322–02	INSERT, CARTRIDGE	1	1				
27	93210–86M38	O-RING	1	1				
28	93210–37160	O-RING	1	1				
29	6E5–44365–01	DAMPER, WATER SEAL 1	1	1				
30	6E5–44312–00	COVER, WATER PUMP HOUSING	1	1				
31	6E5–44352–01	IMPELLER	1	1				
32	90280–04M05	KEY, WOODRUFF	1	1				
33	6G5–44323–01	OUTER PLATE, CARTRIDGE	1	1				
34	6E5–44315–A0	GASKET, WATER PUMP	1	1				
35	93606–12019	PIN, DOWEL	2	2				
36	90119–08191	BOLT, WITH WASHER	4	4				
37	6E5–45331–00–9S	HOUSING, BEARING	1	1				
38	93101–28M16	OIL SEAL	2	2				
39	93317–330U2	BEARING	1	1				
40	6E5–45587–01	SHIM (T:0.10MM)	1	1				UR
	6E5–45587–10	SHIM (T:0.12MM)	1	1				UR
	6E5–45587–20	SHIM (T:0.15MM)	1	1				UR
	6E5–45587–30	SHIM (T:0.18MM)	1	1				UR
	6E5–45587–40	SHIM (T:0.30MM)	1	1				UR
	6E5–45587–50	SHIM (T:0.40MM)	1	1				UR
	6E5–45587–60	SHIM (T:0.50MM)	1	1				UR

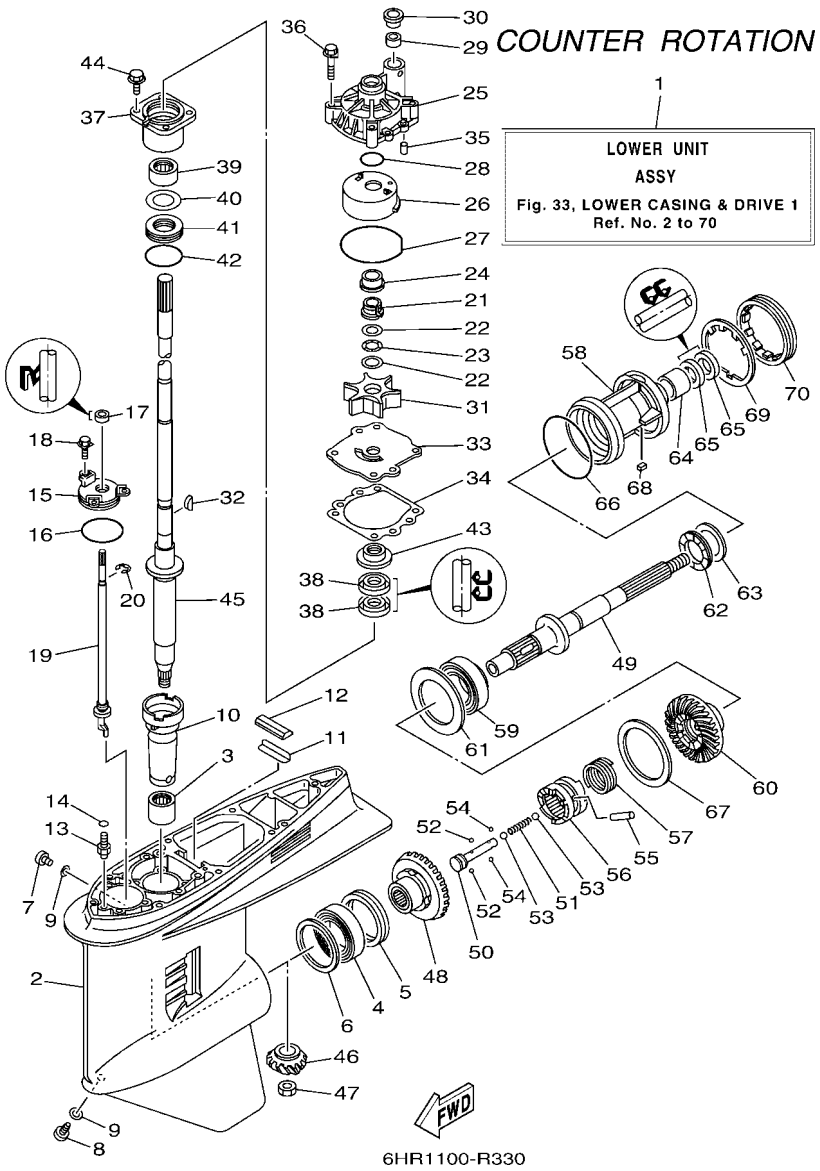

FIG. 33 LOWER CASING & DRIVE 1

REF. NO.	PART NO.	DESCRIPTION	XCA	XCA2				REMARKS
41	93341–930V2	BEARING	1	1				
42	93210–55M14	O-RING	1	1				
43	6E5–45344–00	COVER, OIL SEAL	1	1				
44	97E95–08525	BOLT, HEXAGON W/W DEEP RECESS	4	4				
45	6DA–45501–10	DRIVE SHAFT COMP.	1	1				X(25.3")
46	63P–45551–00	PINION (14T)	1	1				
47	90170–16M01	NUT	1	1				
48	64P–45560–10	GEAR 1 (28T)	1	1				
49	6K1–45611–11	SHAFT, PROPELLER	1	1				
50	6E5–45634–02	SLIDE, SHIFT	1	1				
51	90501–16M37	SPRING, COMPRESSION	1	1				
52	93507–32009	BALL	2	2				
53	93511–32017	BALL	2	2				
54	93503–16003	BALL	2	2				
55	90250–08M07	PIN, STRAIGHT	1	1				
56	6DA–45631–01	CLUTCH, DOG	1	1				
57	6E5–45633–01	RING, CROSS PIN	1	1				
58	6K1–45332–01–CA	HOUSING, BEARING	1	1				
59	93332–00048	BEARING	1	1				
60	64P–45570–10	GEAR 2 (28T)	1	1				
61	6K1–45576–00	WASHER, THRUST 2	1	1				
62	93341–440U5	BEARING	1	1				
63	6K1–45578–01	SHIM (T:0.10MM)	1	1				UR
	6K1–45578–10	SHIM (T:0.12MM)	1	1				UR
	6K1–45578–20	SHIM (T:0.15MM)	1	1				UR
	6K1–45578–30	SHIM (T:0.18MM)	1	1				UR
	6K1–45578–40	SHIM (T:0.30MM)	1	1				UR

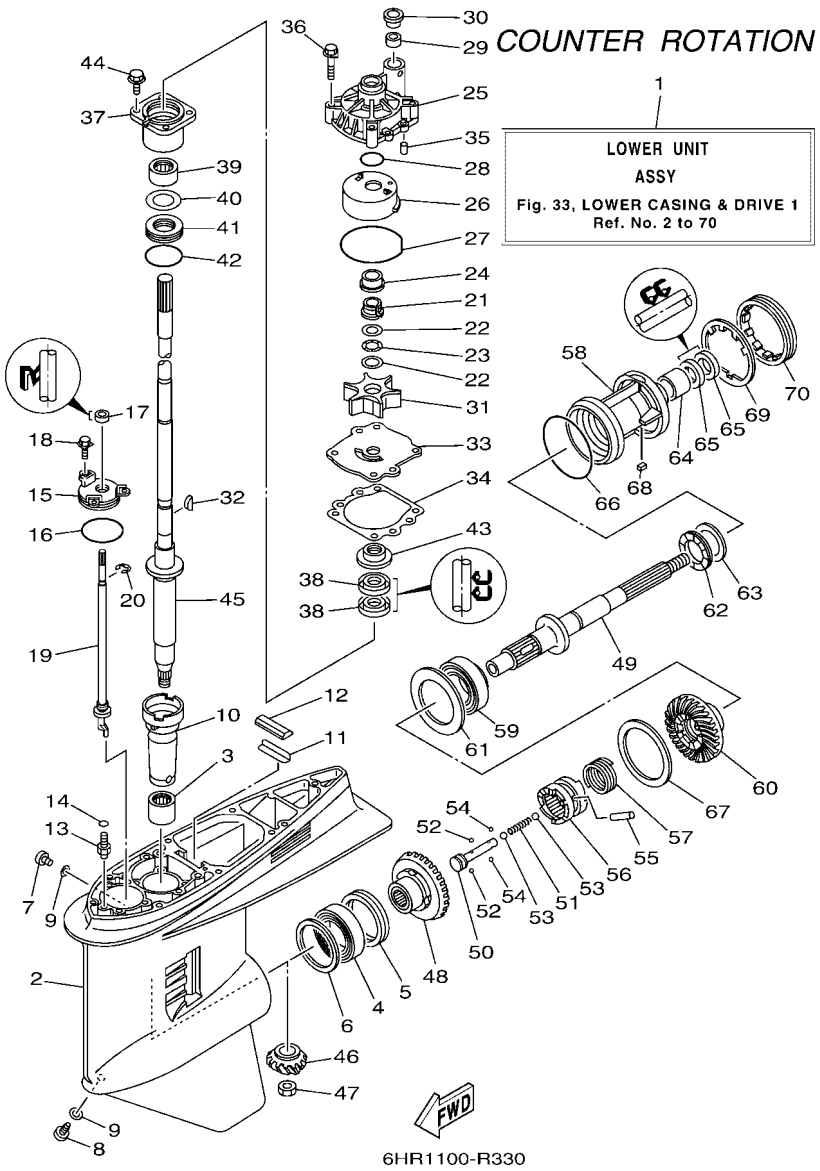

FIG. 33 LOWER CASING & DRIVE 1

REF. NO.	PART NO.	DESCRIPTION	XCA	XCA2				REMARKS
63	6K1–45578–50	SHIM (T:0.40MM)	1	1				UR
	6K1–45578–60	SHIM (T:0.50MM)	1	1				UR
64	93315–43061	BEARING	1	1				
65	93101–30M17	OIL SEAL	2	2				
66	93210–97M55	O-RING	1	1				
67	6G5–45577–02	SHIM (T:0.10MM)	1	1				UR
	6G5–45577–10	SHIM (T:0.12MM)	1	1				UR
	6G5–45577–20	SHIM (T:0.15MM)	1	1				UR
	6G5–45577–30	SHIM (T:0.18MM)	1	1				UR
	6G5–45577–40	SHIM (T:0.30MM)	1	1				UR
	6G5–45577–50	SHIM (T:0.40MM)	1	1				UR
	6G5–45577–60	SHIM (T:0.50MM)	1	1				UR
68	90282–04M00	KEY, STRAIGHT	1	1				
69	6G5–45383–01	WASHER, CLAW	1	1				
70	6G5–45384–02	NUT	1	1				

FIG. 34 LOWER CASING & DRIVE 2

COUNTER ROTATION

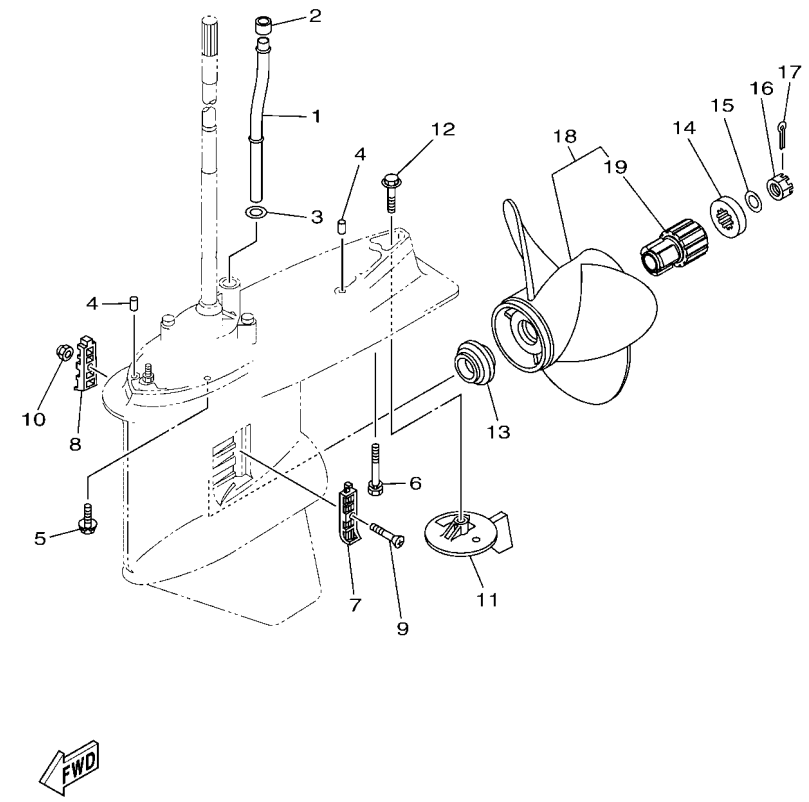

REF. NO.	PART NO.	DESCRIPTION	XCA	XCA2				REMARKS
1	6DA–44361–00	TUBE, WATER 1	1	1				X(25.3")
2	6E5–44365–01	DAMPER, WATER SEAL 1	1	1				
3	90202–16061	WASHER, PLATE	1	1				X(25.3")
4	93608–16M16	PIN, DOWEL	2	2				
5	97E95–10645	BOLT, HEXAGON W/W DEEP RECESS	6	6				
6	90119–10072	BOLT, WITH WASHER	1	1				
7	6J9–45214–00	COVER, WATER INLET 1	1	1				
8	6J9–45215–00	COVER, WATER INLET 2	1	1				
9	90152–05M08	SCREW, COUNTERSUNK	1	1				
10	90185–05002	NUT, NYLON	1	1				
11	6K1–45371–02	TAB-TRIM	1	1				
12	90105–10M00	BOLT, FLANGE	1	1				
13	63P–45987–00	SPACER 1	1	1				
14	688–45997–01	SPACER 2	1	1				
15	92990–18200	WASHER	1	1				
16	90171–18M04	NUT, CASTLE	1	1				
17	91490–40030	PIN. COTTER	1	1				
18	68G–45970–20	PROPELLER (3X14-1/2"X15"-ML)	1	1				UR SDS PROP.
	68G–45972–20	PROPELLER (3X14-1/4"X17"-ML)	1	1				UR SDS PROP.
	68G–45978–20	PROPELLER (3X14-1/4"X18"-ML)	1	1				UR SDS PROP.
	68G–45974–20	PROPELLER (3X13-3/4"X19"-ML)	1	1				UR SDS PROP.
	68G–45976–20	PROPELLER (3X13-3/4"X21"-ML)	1	1				UR SDS PROP.
19	6CE–45C81–10	.DAMPER RUBBER, PROPELLER 1	1	1				

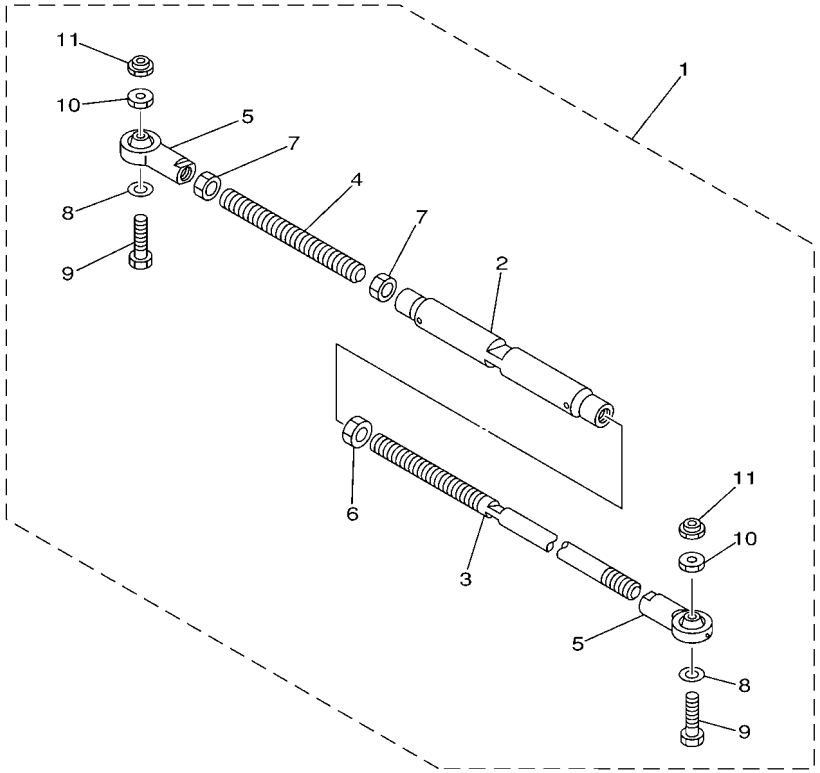

67H0100-0300

FIG. 35 STEERING GUIDE

REF. NO.	PART NO.	DESCRIPTION	XCA	XCA2				REMARKS
1	6E5–61301–01	TWIN KIT (L:600-800MM)	1	1				AP
2	6E5–61313–00	.ADJUSTER	1	1				
3	6E5–61311–11	.TIE BAR	1	1				
4	6E5–61315–00	.TIE BAR	1	1				
5	6E5–61303–01	.STEERING AXLE COMP.	2	2				
6	90170–14M06	.NUT	1	1				
7	95380–14700	.NUT	2	2				
8	90201–10M76	.WASHER, PLATE	2	2				
9	90101–09M70	.BOLT	2	2				
10	90170–09M05	.NUT	2	2				
11	90185–09M01	.NUT, SELF-LOCKING	2	2				

FIG. 36 OPTIONAL PARTS 1

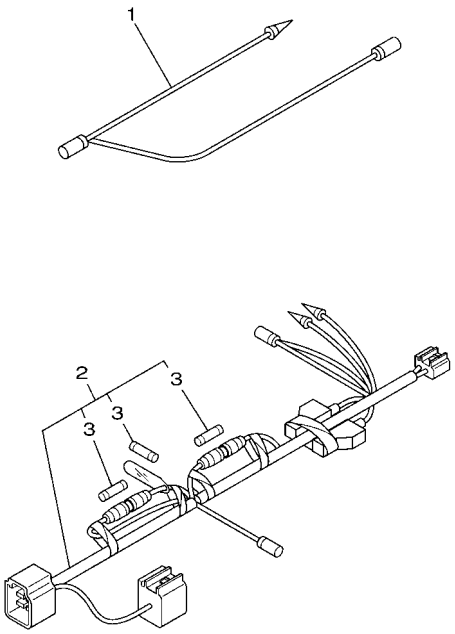

6DW1100-M360

REF. NO.	PART NO.	DESCRIPTION	XCA	XCA2				REMARKS
1	6H5–81315–00	LEAD WIRE ASSY	1	1				
2	6Y8–81315–02	LEAD WIRE ASSY	1	1				
3	6TA–82151–01	.FUSE(5A)	3	3				

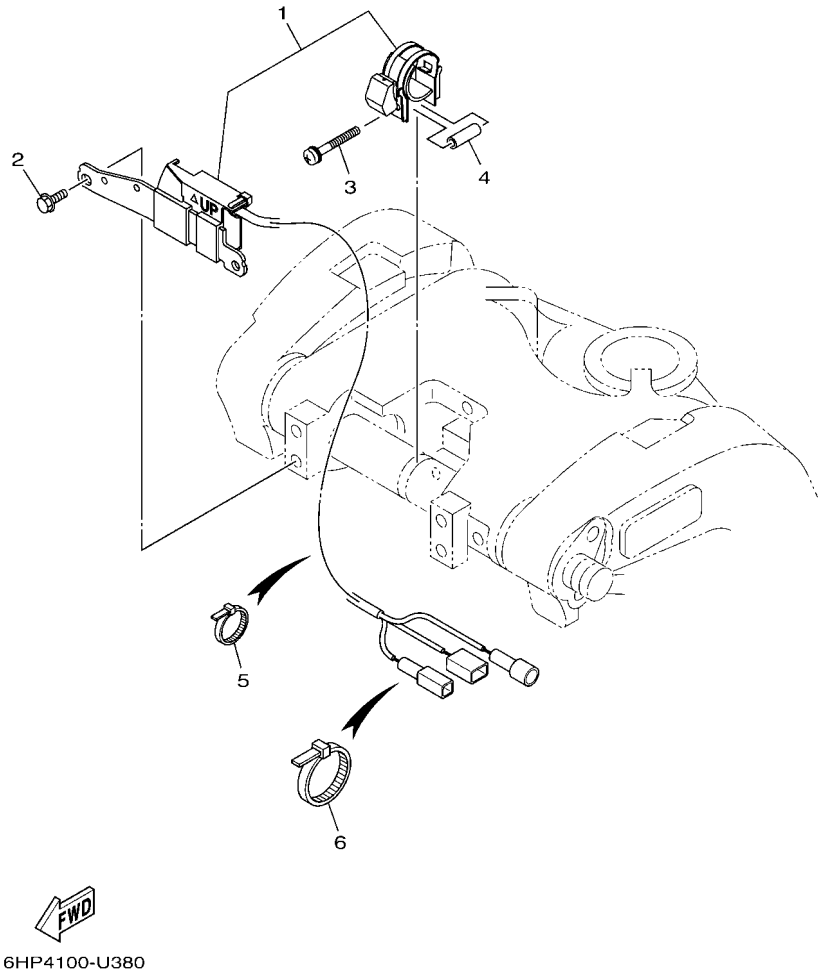

FIG. 37 OPTIONAL PARTS 2

REF. NO.	PART NO.	DESCRIPTION	XCA	XCA2				REMARKS
1	6CE–825E0–01	TILT LIMIT SWITCH ASSY	1	1				
2	97E95–06516	BOLT, HEXAGON W/W DEEP RECESS	2	2				
3	90159–05059	SCREW, WITH WASHER	1	1				
4	90387–05004	COLLAR	1	1				
5	90465–11M10	CLAMP	9	9				
6	90465–13M18	CLAMP	1	1				

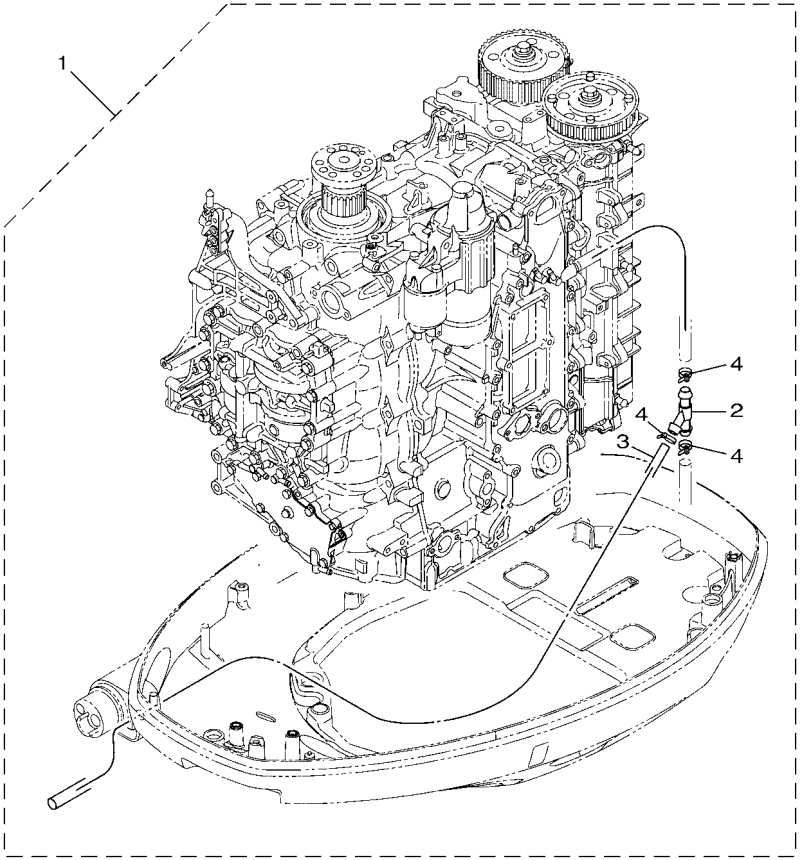

6HP4100-U390

FIG. 38 OPTIONAL PARTS 3

REF. NO.	PART NO.	DESCRIPTION	XCA	XCA2				REMARKS
1	*	FLUSHING HOSE KIT	1	1				LM
2	6DA–13758–00	.PIPE, JOINT	1	1				
3	6DA–14987–00	.HOSE	1	1				
4	90465–11M10	.CLAMP	3	3				

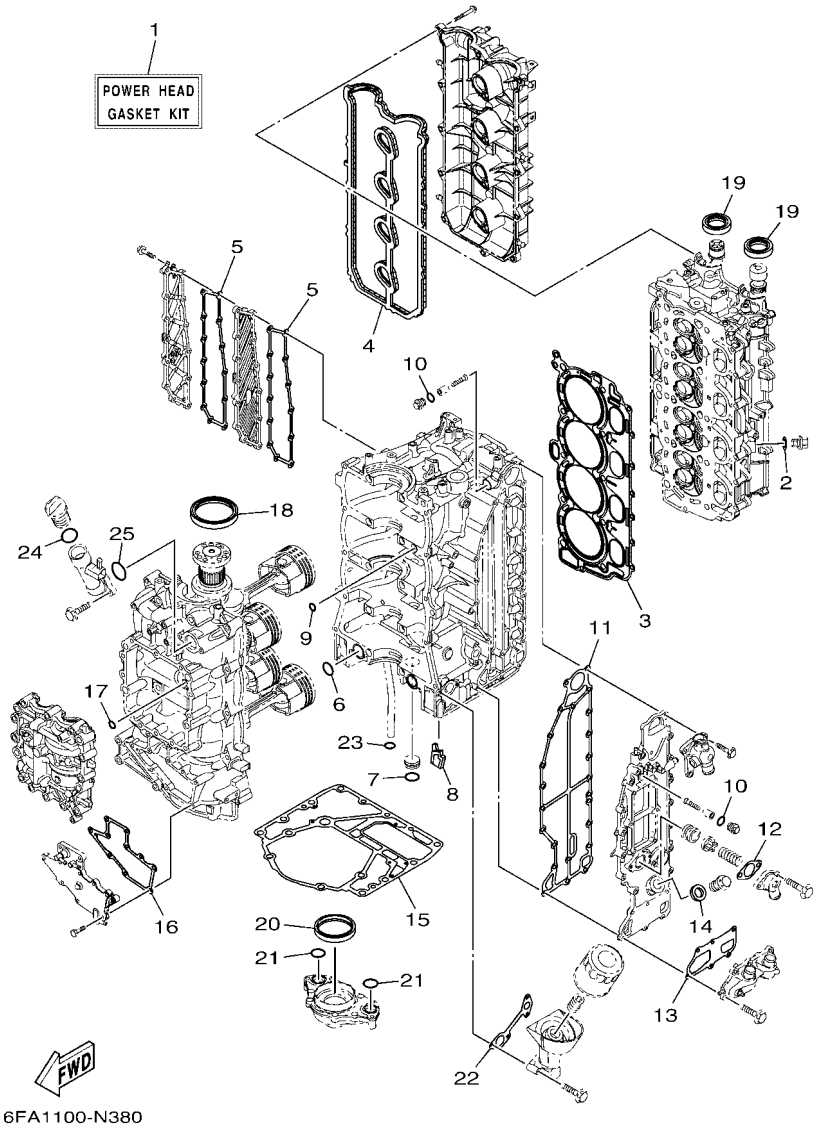

FIG. 39 REPAIR KIT 1

REF. NO.	PART NO.	DESCRIPTION	XCA	XCA2				REMARKS
1	6FA–W0001–01	POWER HEAD GASKET KIT	1	1				
2	90430–14115	.GASKET	1	1				
3	6DA–11181–00	.GASKET, CYLINDER HEAD 1	1	1				
4	6DA–11193–00	.GASKET, HEAD COVER 1	1	1				
5	6DA–15353–01	.GASKET, DRAIN	2	2				
6	93210–25552	.O-RING	2	2				
7	93210–25647	.O-RING	1	1				
8	6DA–14664–00	.GROMMET, WATER SHUT	1	1				
9	93210–12648	.O-RING	1	1				
10	93210–13M63	.O-RING	2	2				
11	6DA–41114–01	.GASKET, EXHAUST OUTER COVER	1	1				
12	60V–11382–A0	.GASKET 2	1	1				
13	6DA–11381–01	.GASKET 1	1	1				
14	90201–186F1	.WASHER, PLATE	1	1				
15	63P–11351–03	.GASKET, CYLINDER	1	1				
16	6DA–15451–01	.GASKET, CRANKCASE COVER 1	1	1				
17	93210–08001	.O-RING	1	1				
18	93102–85008	.OIL SEAL	1	1				
19	93102–38008	.OIL SEAL	2	2				
20	6CB–11355–00	.SEAL, CYLINDER 1	1	1				
21	93210–25552	.O-RING	2	2				
22	6DA–13475–00	.GASKET	1	1				
23	93210–19MJ3	.O-RING	1	1				
24	93210–24M79	.O-RING	1	1				
25	93210–357A3	.O-RING	1	1				

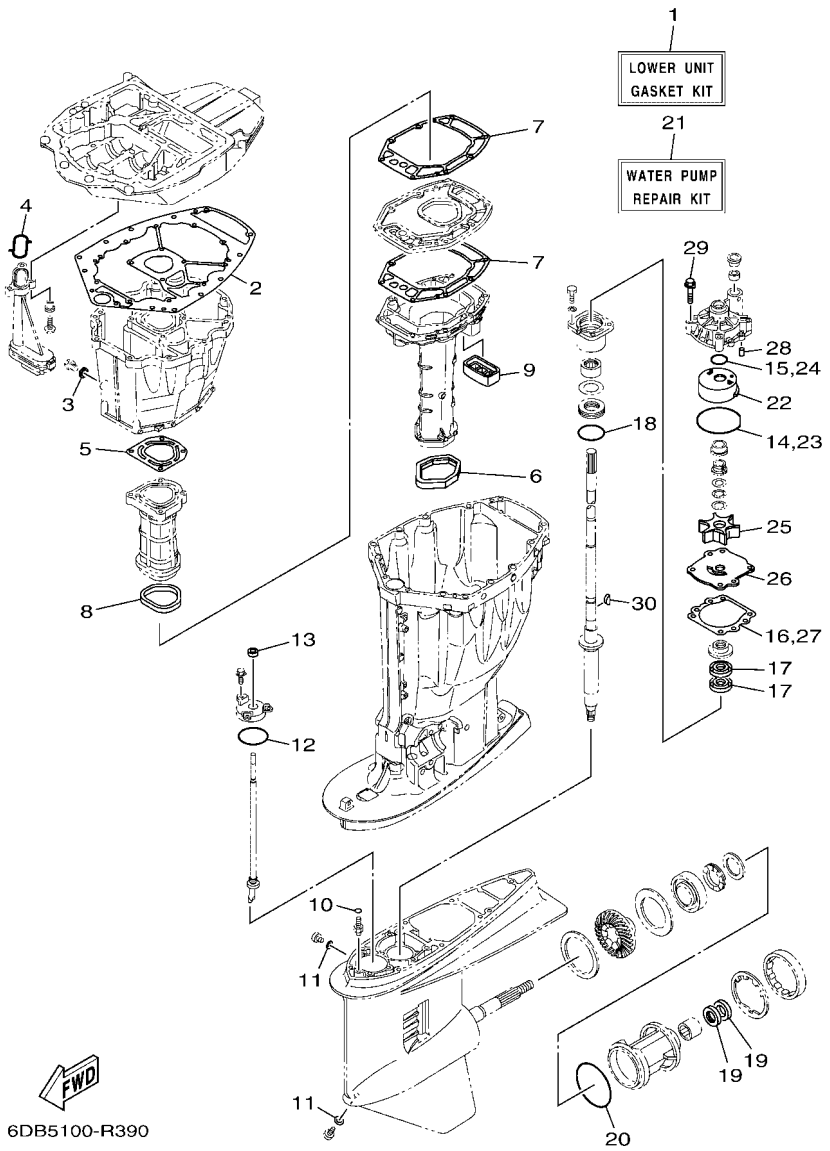

FIG. 40 REPAIR KIT 2

REF. NO.	PART NO.	DESCRIPTION	XCA	XCA2				REMARKS
1	63P–W0001–22	LOWER UNIT GASKET KIT	1	1				
2	63P–15312–02	.GASKET, OIL PAN	1	1				
3	90430–14M09	.GASKET	1	1				
4	63P–13415–00	.SEAL, OIL STRAINER	1	1				
5	63P–41133–A0	.GASKET, EXHAUST MANIFOLD 1	1	1				
6	69J–45123–00	.GASKET, MUFFLER	1	1				
7	63P–41134–A1	.GASKET, EXHAUST MANIFOLD	2	2				
8	63P–41138–00	.SEAL, EXT. 1	1	1				
9	69J–45127–01	.SEAL	1	1				
10	93210–07003	.O-RING	2	2				
11	90430–08003	.GASKET	2	2				
12	93210–58144	.O-RING	1	1				
13	93106–09014	.OIL SEAL	1	1				
14	93210–86M38	.O-RING	1	1				
15	93210–37160	.O-RING	1	1				
16	6E5–44315–A0	.GASKET, WATER PUMP	1	1				
17	93101–28M16	.OIL SEAL	2	2				
18	93210–55M14	.O-RING	1	1				
19	93101–30M17	.OIL SEAL	2	2				
20	93210–97M55	.O-RING	1	1				
21	61A–W0078–A4	WATER PUMP REPAIR KIT	1	1				
22	61A–44322–02	.INSERT, CARTRIDGE	1	1				
23	93210–86M38	.O-RING	1	1				
24	93210–37160	.O-RING	1	1				
25	6E5–44352–01	.IMPELLER	1	1				
26	6G5–44323–01	.OUTER PLATE, CARTRIDGE	1	1				
27	6E5–44315–A0	.GASKET, WATER PUMP	1	1				

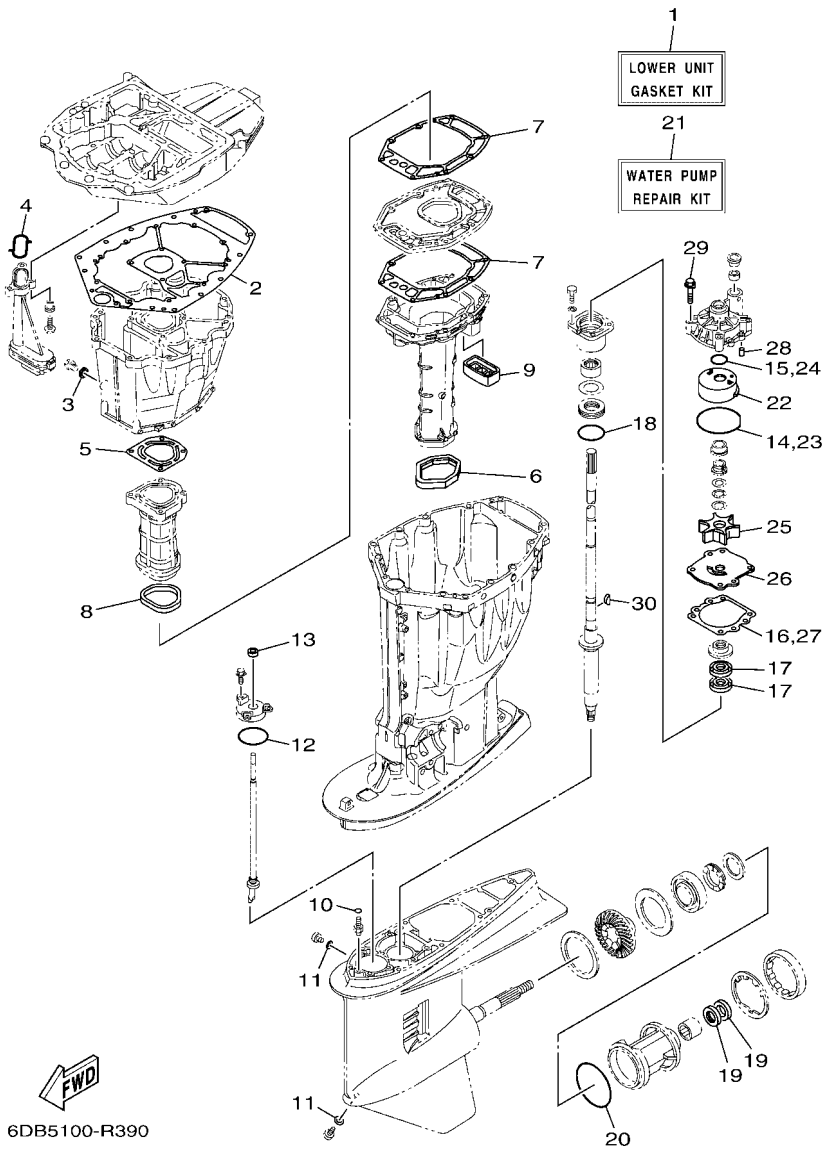

FIG. 40 REPAIR KIT 2

REF. NO.	PART NO.	DESCRIPTION	XCA	XCA2				REMARKS
28	93606–12019	.PIN, DOWEL	2	2				
29	90119–08191	.BOLT, WITH WASHER	4	4				
30	90280–04M05	.KEY, WOODRUFF	1	1				

PART NO.	REF. NO.
6FA–11110–02–9S	5 – 2
6DA–11133–10	5 – 3
6DA–11181–00	5 – 17
	39 – 3
6DA–11191–00	5 – 22
6DA–11193–00	5 – 23
	39 – 4
6G8–11197–A0	6 – 1
67F–11301–01	5 – 11
69J–11301–01	6 – 15
68T–11325–00	1 – 3
	6 – 2
6E5–11325–00	1 – 2
	1 – 6
	3 – 8
	3 – 29
67F–11325–01	1 – 1
	1 – 4
	5 – 12
	6 – 16
67F–11328–01	5 – 13
	6 – 17
63P–11351–03	3 – 19
	39 – 15
6CB–11355–00	32 – 15
	39 – 20
6G5–11372–00	6 – 11
6DA–11381–01	6 – 22
	39 – 13
60V–11382–A0	6 – 13
	39 – 12
6DA–11410–00	4 – 1
6DA–11416–00	4 – 5
6DA–11416–10	4 – 5
6DA–11416–20	4 – 5
6DA–11417–00	4 – 6
6DA–11417–10	4 – 6
6DA–11417–20	4 – 6
6DA–11426–00	4 – 7
6DA–11427–00	4 – 8
6CB–11478–00	4 – 2
6DA–11500–00	3 – 20
63P–11512–00	3 – 23
6FA–11567–00	8 – 15
6DA–11590–00	8 – 18
6DA–11595–00	8 – 21
6FA–115A0–00	8 – 13
6CB–11603–00	4 – 12

PART NO.	REF. NO.
6DA–11631–20–94	4 – 11
6CB–11633–00	4 – 13
63P–11654–10	4 – 10
6JD–11656–00	4 – 15
6JD–11656–10	4 – 15
6JD–11656–20	4 – 15
6DA–11998–00	25 – 18
6DA–11999–00	25 – 20
6CB–12111–00	8 – 1
6CB–12113–00	8 – 4
51Y–12119–00	8 – 7
6DA–12121–00	8 – 2
6FA–12171–00	8 – 9
6DA–12181–01	8 – 11
6DA–12411–01	1 – 5
	6 – 25
6AW–12412–00	6 – 26
6DA–12413–A0–9S	6 – 27
60H–12416–00	6 – 8
6DA–1241B–A0–9S	6 – 47
6DA–1243A–00	6 – 12
6DA–1243E–00	6 – 28
6DA–1244H–00	6 – 30
6DA–12491–00	6 – 34
6DA–12527–00–9S	6 – 21
6DA–12552–00	7 – 13
6AW–12572–00	25 – 4
6DA–12576–00	7 – 1
	11 – 6
6DA–12578–00	7 – 6
6DA–12579–00	7 – 11
6R3–12581–00	25 – 5
6AW–12582–00	25 – 6
6R3–12583–00	25 – 7
6DA–12589–00	7 – 2
	7 – 15
6S5–12858–00	6 – 38
6CB–13016–00	1 – 10
	12 – 5
6AW–13119–00	32 – 13
6AW–13132–00	12 – 25
6DA–13152–00	9 – 3
6DA–13160–01	10 – 6
6DA–13161–01	10 – 7
6DA–13300–00	32 – 11
6DA–13329–00	32 – 12
63P–13411–00	32 – 7
63P–13415–00	32 – 9

PART NO.	REF. NO.
63P–13415–00	40 – 4
63P–13437–63	16 – 27
69J–13440–04	1 – 8
	6 – 37
6DA–13446–01	6 – 39
6DA–13475–00	6 – 40
	39 – 22
63P–13490–00	3 – 31
6DA–13532–00	11 – 1
6DA–13545–00	11 – 18
68V–13546–10	11 – 20
6FA–13547–00	11 – 24
6FA–13548–00	11 – 21
6DA–13564–00	10 – 4
6AW–13577–10	10 – 10
6CB–13593–00	12 – 22
69J–13631–00	32 – 14
6DA–13641–00	9 – 11
6DA–13645–00	9 – 13
6DA–13646–00	9 – 12
63P–13716–00	12 – 21
6DA–13751–01	9 – 1
6DA–13758–00	38 – 2
6DA–13761–00	10 – 8
6AW–13781–00	12 – 29
6AW–13784–00	12 – 32
6DA–13881–00	9 – 19
6DA–13892–00	12 – 11
6DA–13893–00	12 – 12
6CB–13906–01	12 – 8
6P2–13907–21	12 – 23
63P–13915–00	1 – 11
	12 – 24
6AW–1410B–00	10 – 9
6DA–14146–00	12 – 10
6P2–14149–00	12 – 35
6DA–14180–02	12 – 1
6DA–14181–00	12 – 14
6DA–14182–00	12 – 2
6P2–14191–00	12 – 15
6CB–14216–00	12 – 6
6CB–14239–00	12 – 16
6P2–14386–00	12 – 31
6P2–1441J–01	9 – 7
6CB–14429–01	12 – 18
6DA–14440–00	9 – 5
6CB–1447B–00	12 – 28
6CB–14546–00	12 – 27

PART NO.	REF. NO.
6CB–14564–00	12 – 9
63P–14567–00	12 – 20
69J–14624–01	31 – 25
6DA–14664–00	39 – 8
6DA–14664–01	3 – 15
6DA–14711–01	31 – 12
6DA–1475A–00	11 – 11
6DA–1475F–00	11 – 13
6DA–1475G–00	11 – 16
6CB–14984–00	1 – 12
	12 – 30
6CB–14985–00	12 – 26
6DA–14987–00	38 – 3
6CB–14989–00	11 – 15
6DA–15109–01–9S	3 – 2
6DA–15311–01	32 – 2
63P–15312–02	32 – 1
	40 – 2
6BB–15316–01	31 – 27
6DA–15319–00	6 – 44
6DA–15353–01	3 – 7
	39 – 5
6DA–15362–00	32 – 18
6G8–15363–00	6 – 42
6DA–15373–00	9 – 9
6DA–15377–00	32 – 19
6DA–15411–00–9S	3 – 24
6DA–15414–00–9S	3 – 4
6DA–15423–00–9S	3 – 6
6DA–15451–01	3 – 25
	39 – 16
6DA–2134X–00	10 – 30
63D–21744–00	11 – 23
6E5–21744–00	11 – 22
6DA–2416A–00	11 – 14
6P2–24170–00	10 – 27
63P–2419A–01	10 – 28
6CB–24217–00	12 – 7
6DA–24310–01	13 – 2
6DA–24313–00	14 – 19
6DA–24314–00	14 – 3
6DA–24317–00	13 – 12
6DA–24323–00	13 – 15
6DA–24324–00	13 – 8
6E5–24351–51	14 – 4
6YK–24360–73	15 – 1
6CE–24377–00	7 – 3
	11 – 7

PART NO.	REF. NO.
6AW–24377–01	14 – 2
688–24378–00	11 – 19
6CE–24378–00	6 – 29
6E5–24378–00	13 – 11
69J–24379–00	12 – 13
6GR–24410–01	10 – 15
6DA–24425–00	10 – 13
6DA–24426–00	10 – 18
6CB–24452–10	12 – 17
4SV–24453–00	12 – 33
6CB–24460–00	12 – 4
6DA–24462–00	10 – 23
6P3–24469–00	14 – 11
6CB–24482–00	12 – 19
6DA–24491–00	10 – 17
6DA–24492–01	10 – 16
6CB–24501–01	1 – 9
	12 – 3
6P3–24519–00	14 – 12
6P3–24560–04	14 – 8
6P3–24562–03	14 – 10
6P3–24563–01	1 – 13
6P3–24563–02	14 – 9
6P3–24564–00	1 – 14
	14 – 13
6DA–24566–00	14 – 14
6DA–24596–00	14 – 6
69J–28100–03	14 – 21
67F–2812A–00	17 – 28
6DA–41113–00–9S	6 – 5
6DA–41114–01	6 – 6
	39 – 11
63P–41131–02	31 – 9
63P–41133–A0	31 – 10
	40 – 5
63P–41134–A1	31 – 16
	40 – 7
63P–41137–05	31 – 1
63P–41138–00	31 – 18
	40 – 8
6DV–42195–00	26 – 9
6BG–42384–00	25 – 2
6DA–42384–00	23 – 23
6DA–42510–00–8D	28 – 8
6DA–42510–00–CE	28 – 8
6DA–42541–00	25 – 8
6HP–42610–01	2 – 1
6HP–42610–10–CE	2 – 1

PART NO.	REF. NO.
6DA–42615–00	23 – 5
6DA–42617–00	16 – 26
6DA–4261A–02	2 – 2
6DA–4261A–02–CE	2 – 2
6CB–42647–A0	2 – 3
6DA–42662–01	3 – 33
6CB–42662–02	25 – 22
6AW–42663–01	2 – 9
6DA–42675–00	2 – 14
6DA–42675–10	2 – 14
6DA–42676–00	2 – 15
6DA–42676–10	2 – 15
63P–42677–60	2 – 16
63P–42677–70	2 – 16
63P–42678–60	2 – 13
63P–42678–70	2 – 13
63P–42681–20	2 – 17
63P–42681–30	2 – 17
6DA–42697–00	2 – 12
6DA–42710–00–8D	23 – 1
6DA–42710–00–CE	23 – 1
63P–42716–01	23 – 6
6DA–42717–01	23 – 22
69J–42723–01	20 – 10
6E5–42724–01	31 – 7
6CE–42725–03	23 – 2
6H1–42726–22	25 – 1
61A–42727–01	23 – 26
6DA–42740–01	24 – 1
6DA–42744–00	3 – 32
6BG–42748–01	16 – 16
6H4–42748–01	23 – 24
68F–42753–00	23 – 30
6CB–42761–00	23 – 3
6DA–42769–01	31 – 8
6DA–42770–01	24 – 2
6EE–42794–40	23 – 32
6EE–42794–50	23 – 33
6DA–42815–01–8D	23 – 7
6DA–42815–01–CE	23 – 7
6DA–42816–02–8D	23 – 8
6DA–42816–02–CE	23 – 8
6DA–42817–02–8D	23 – 9
6DA–42817–02–CE	23 – 9
6CB–42818–00	23 – 13
6CB–42819–00	23 – 14
64E–43111–02–8D	27 – 1
64E–43111–02–CE	27 – 1

PART NO.	REF. NO.
64E–43112–02–8D	27 – 7
64E–43112–02–CE	27 – 7
64E–43126–10	27 – 35
64E–43131–30	27 – 11
64E–43139–11	28 – 1
66T–43144–00	23 – 17
6G5–43144–00	27 – 25
6G5–43148–00	27 – 30
6G5–43181–02	27 – 27
6G5–43185–02	27 – 28
64E–43311–20–8D	27 – 21
64E–43311–20–CE	27 – 21
63P–43338–10	29 – 54
61A–43376–00	28 – 6
63P–43800–21	29 – 1
63P–43801–10	29 – 4
63P–43802–20	29 – 37
6EK–43804–11	30 – 3
6EK–43805–01	30 – 2
6EK–4380F–00	30 – 6
63P–4380L–21	29 – 2
63P–4380P–20	29 – 9
63P–43810–21	29 – 3
63P–43811–20	29 – 6
63P–43812–20	29 – 23
63P–43814–20	29 – 13
6CJ–43816–00	29 – 61
63P–43816–10	29 – 20
6BC–43818–00	27 – 19
63P–4381C–20	29 – 41
63P–4381J–10	29 – 62
63P–43820–20	29 – 26
63P–43821–21	29 – 25
6CJ–43829–10	29 – 17
63P–4382A–10	29 – 31
63P–4382C–20	29 – 15
63P–43830–20	29 – 42
69J–43831–00	29 – 66
6H1–43841–11	29 – 18
63P–43843–10	29 – 53
6H1–43844–10	29 – 45
63P–43844–20	29 – 51
63P–43845–20	29 – 34
63P–43847–10	29 – 29
6H1–4384G–11	29 – 44
63P–4384G–20	29 – 55
63P–4384H–10	29 – 32
63P–43851–20	29 – 48

PART NO.	REF. NO.
63P–43854–10	29 – 30
69J–43855–00	29 – 52
6H1–43856–10	29 – 46
63P–43857–10	29 – 59
63P–4385H–10	29 – 60
6CJ–43861–10	29 – 68
63P–43861–20	29 – 7
6EK–43862–00	30 – 12
6H1–43862–00	29 – 10
	29 – 12
63P–43862–10	29 – 24
6D8–43863–00	29 – 22
63P–43863–10	29 – 8
6H1–43866–01	29 – 39
62X–4386K–00	30 – 7
62X–43871–00	29 – 27
61A–43876–01	29 – 36
63P–43876–10	29 – 19
61A–43878–00	29 – 65
63P–43879–10	30 – 8
63P–43880–22	30 – 1
63P–43881–21	30 – 10
6EK–43882–00	30 – 11
6EK–43892–00	30 – 4
69J–4389J–00	29 – 33
6DV–44100–00	26 – 16
6DV–44118–00	26 – 21
6DV–44120–02	26 – 23
6DV–44121–00	26 – 18
6DV–44122–00	26 – 10
6DV–44132–00	26 – 11
6DV–44142–00	26 – 7
64P–44150–01	33 – 19
6DA–44194–00	28 – 32
61A–44311–01	33 – 25
6E5–44312–00	33 – 30
6E5–44315–A0	33 – 34
	40 – 16
	40 – 27
61A–44322–02	33 – 26
	40 – 22
6G5–44323–01	33 – 33
	40 – 26
6E5–44352–01	33 – 31
	40 – 25
6DA–44361–00	34 – 1
6E5–44365–01	33 – 29
	34 – 2

PART NO.	REF. NO.
6E5–44366–01	31 – 30
6P2–44391–00	23 – 25
63P–44511–00	28 – 34
6DA–44514–00	28 – 25
6DA–44526–00	28 – 29
6G5–44526–00	27 – 3
6DA–44532–00	28 – 30
6DA–44551–00–CA	28 – 13
6DA–44552–00–CA	28 – 23
63P–44555–00	28 – 16
6DA–44575–00	28 – 15
6DA–45111–00–8D	31 – 20
6DA–45111–00–CE	31 – 20
69J–45123–00	31 – 13
	40 – 6
69J–45127–01	31 – 19
	40 – 9
6BB–45152–01	31 – 28
6DA–45155–01	31 – 31
63P–45181–02	31 – 17
6J9–45214–00	34 – 7
6J9–45215–00	34 – 8
6AW–45251–00	1 – 15
	27 – 2
6HR–45300–13–8D	33 – 1
6HR–45300–13–CE	33 – 1
6J9–45301–07–8D	33 – 2
6J9–45301–07–CE	33 – 2
6E5–45318–00	31 – 23
6E5–45321–00	33 – 15
6E5–45331–00–9S	33 – 37
6K1–45332–01–CA	33 – 58
688–45341–10	33 – 8
6E5–45344–00	33 – 43
6K1–45371–02	1 – 17
	34 – 11
688–45375–00	33 – 12
663–45376–00	33 – 11
63P–45378–00	33 – 13
63P–45379–00	31 – 35
6G5–45383–01	33 – 69
6G5–45384–02	33 – 70
6DA–45501–10	33 – 45
61A–45527–00	33 – 24
6G5–45536–01	33 – 10
61A–45538–00	33 – 21
63P–45551–00	33 – 46
64P–45560–10	33 – 48

PART NO.	REF. NO.
6G5–45567–01	33 – 6
6G5–45567–10	33 – 6
6G5–45567–20	33 – 6
6G5–45567–30	33 – 6
6G5–45567–40	33 – 6
6G5–45567–50	33 – 6
6G5–45567–60	33 – 6
64P–45570–10	33 – 60
6K1–45576–00	33 – 61
6G5–45577–02	33 – 67
6G5–45577–10	33 – 67
6G5–45577–20	33 – 67
6G5–45577–30	33 – 67
6G5–45577–40	33 – 67
6G5–45577–50	33 – 67
6G5–45577–60	33 – 67
6K1–45578–01	33 – 63
6K1–45578–10	33 – 63
6K1–45578–20	33 – 63
6K1–45578–30	33 – 63
6K1–45578–40	33 – 63
6K1–45578–50	33 – 63
6K1–45578–60	33 – 63
6E5–45587–01	33 – 40
6E5–45587–10	33 – 40
6E5–45587–20	33 – 40
6E5–45587–30	33 – 40
6E5–45587–40	33 – 40
6E5–45587–50	33 – 40
6E5–45587–60	33 – 40
6K1–45611–11	33 – 49
6DA–45631–01	33 – 56
6E5–45633–01	33 – 57
6E5–45634–02	33 – 50
68G–45970–20	34 – 18
68G–45972–20	34 – 18
68G–45974–20	34 – 18
68G–45976–20	34 – 18
68G–45978–20	34 – 18
63P–45987–00	34 – 13
688–45997–01	34 – 14
6CE–45C81–10	34 – 19
6DV–4820A–01	26 – 1
6E5–61301–01	35 – 1
6E5–61303–01	35 – 5
6E5–61311–11	35 – 3
6E5–61313–00	35 – 2
6E5–61315–00	35 – 4

PART NO.	REF. NO.
6DV–68303–00	26 – 31
6H5–81315–00	36 – 1
6Y8–81315–02	36 – 2
6DA–8132G–01	16 – 19
6DA–81336–01	17 – 30
6DA–81337–00	16 – 12
6DA–81410–00	16 – 3
6CB–81639–10	17 – 24
6CB–81800–01	22 – 1
69J–81801–11	22 – 5
6CB–81807–00	22 – 8
6CB–81809–00	22 – 14
67F–81810–00	22 – 3
67F–81813–00	22 – 6
6CB–81820–00	22 – 7
67F–81821–00	22 – 11
6DA–81822–00	21 – 6
6CB–81826–00	22 – 22
69J–81828–00	22 – 23
67F–81830–00	22 – 16
6CB–81832–00	22 – 9
6CB–81836–00	22 – 10
6C5–81839–00	22 – 19
67F–8183R–00	22 – 13
60V–8183T–00	22 – 17
6P2–8183X–00	18 – 5
69J–81840–11	22 – 4
67F–81841–00	22 – 12
6CB–81842–00	22 – 18
67F–81846–00	22 – 24
67F–81850–00	22 – 2
6C5–81869–00	22 – 21
67F–81891–00	22 – 15
6DV–81919–01	17 – 33
60V–81925–00	21 – 4
6C5–81941–00	22 – 20
6DA–81942–00	18 – 11
6DA–81948–01	17 – 5
69J–81949–03	20 – 18
6AW–81950–00	18 – 4
6DA–81952–01	17 – 10
6AW–8195A–00	17 – 19
6DV–81960–00	18 – 1
6DA–81975–01	18 – 2
6EE–81994–40	16 – 28
6EE–81994–50	16 – 29
6AH–81996–00	23 – 34
6DA–82105–02	18 – 22

PART NO.	REF. NO.
6P2–82113–00	17 – 27
6E5–82148–00	27 – 5
	27 – 8
6DA–82149–00	27 – 24
67F–82151–00	17 – 22
6P2–82151–00	17 – 18
6TA–82151–01	36 – 3
67F–82151–10	17 – 23
67F–82151–40	17 – 20
67F–82151–50	17 – 21
6DV–82170–11	17 – 17
63P–82181–20	30 – 5
6CB–82310–00	19 – 5
6DA–82314–00	19 – 7
6A0–82317–01	16 – 15
6DA–82388–00	18 – 16
	21 – 9
6DA–82389–00	18 – 17
6D8–82389–01	19 – 1
6DA–82398–01	16 – 23
6DA–82553–00	20 – 6
6P2–82560–01	18 – 13
6BR–82563–01	20 – 9
6C5–8257V–00	17 – 31
68F–82582–00	21 – 5
69J–82587–01	20 – 11
6E9–82588–00	18 – 14
6HP–82590–01	20 – 1
6DA–8259M–00	20 – 5
6CE–825E0–01	37 – 1
68F–82846–00	17 – 26
6E5–83558–00	31 – 32
6DA–83614–00	20 – 13
63P–83614–01	20 – 12
6AW–83651–00	20 – 8
6DV–8366G–00	25 – 12
67H–83672–02	28 – 3
68F–83688–10	9 – 15
6P2–85075–00	19 – 10
68F–85119–00	17 – 8
	17 – 13
	26 – 6
60V–85516–00	10 – 21
68F–85516–01	17 – 6
	17 – 11
6CB–85544–00	17 – 25
689–85547–01	14 – 1
6DA–85548–01	17 – 14

PART NO.	REF. NO.
6DA–85561–00	16 – 6
6DV–85564–00	26 – 3
6CB–85580–00	16 – 5
6CJ–85780–00	20 – 15
6CB–85790–00	20 – 7
6P2–85896–00	19 – 9
6HP–8591A–01	17 – 1
6DA–85991–00	17 – 3
6C5–86120–00	10 – 31
K0F–A3233–00	4 – 14
K0F–A3741–00	8 – 5
K0F–A3742–00	8 – 6
K0F–A3743–00	8 – 3
K0F–A3751–00	8 – 8
K0F–A3751–10	8 – 8
K0F–A3751–20	8 – 8
K0F–A3751–30	8 – 8
K0F–A3751–40	8 – 8
K0F–A3751–50	8 – 8
K0F–A3751–60	8 – 8
K0F–A3751–70	8 – 8
K0F–A3751–80	8 – 8
K0F–A3751–90	8 – 8
K0F–A3751–A0	8 – 8
K0F–A3751–B0	8 – 8
K0F–A3751–C0	8 – 8
K0F–A3751–D0	8 – 8
K0F–A3751–E0	8 – 8
K0F–A3751–F0	8 – 8
K0F–A3751–G0	8 – 8
K0F–A3751–H0	8 – 8
K0F–A3751–J0	8 – 8
K0F–A3751–K0	8 – 8
K0F–A3751–L0	8 – 8
K0F–A3751–M0	8 – 8
K0F–A3751–N0	8 – 8
K0F–A3751–P0	8 – 8
K0F–A3751–R0	8 – 8
K0F–A3751–S0	8 – 8
K0F–A3751–T0	8 – 8
K0F–A3753–00	8 – 8
K0F–A3753–10	8 – 8
K0F–A3753–20	8 – 8
K0F–A3753–30	8 – 8
K0F–A3753–40	8 – 8
K0F–A3753–50	8 – 8
K0F–A3753–60	8 – 8
K0F–A3753–70	8 – 8

PART NO.	REF. NO.
6FA–W0001–01	39 – 1
63P–W0001–22	40 – 1
61A–W0078–A4	1 – 19
	40 – 21
6FA–W009A–03–9S	5 – 1
6DA–W009B–13–9S	3 – 1
6CB–W1165–10	4 – 9
63P–W4267–10	2 – 18
63P–W4267–20	2 – 18
6DA–W4624–00	8 – 17
6DA–W8145–00	16 – 1
6EK–W9010–00	16 – 2
90101–09M70	35 – 9
90101–12065	27 – 40
90101–12066	27 – 40
90105–06028	3 – 5
	6 – 7
	6 – 23
	6 – 31
90105–06037	6 – 46
90105–06054	10 – 3
90105–06151	5 – 21
	6 – 41
90105–06196	3 – 34
90105–06M07	5 – 14
	6 – 18
90105–06M08	10 – 11
	10 – 14
90105–08175	3 – 22
	5 – 20
90105–08M87	21 – 8
90105–10406	3 – 17
	3 – 21
90105–10M00	34 – 12
90105–14009	28 – 27
90105–14012	28 – 21
90111–06142	24 – 4
90111–06144	24 – 3
90111–08078	2 – 4
90119–06078	6 – 36
90119–06276	3 – 14
90119–06286	33 – 18
90119–06287	31 – 36
90119–06291	16 – 18
90119–06299	10 – 12
90119–06309	10 – 20
	10 – 35
	14 – 15

PART NO.	REF. NO.
90119–06MA3	3 – 26
	6 – 14
90119–07001	5 – 7
90119–07234	5 – 8
90119–08020	9 – 14
90119–08182	31 – 2
90119–08187	23 – 21
90119–08189	31 – 5
90119–08191	33 – 36
	40 – 29
90119–08M66	3 – 18
90119–10007	31 – 21
90119–10024	28 – 26
90119–10050	8 – 14
90119–10054	27 – 18
90119–10058	28 – 24
90119–10072	34 – 6
90119–10M07	8 – 19
90149–11001	5 – 19
90151–05M05	6 – 3
90152–05M08	34 – 9
90159–05059	28 – 2
	37 – 3
90159–06053	24 – 9
90169–05M00	18 – 12
90170–09M05	35 – 10
90170–14M06	35 – 6
90170–16M01	33 – 47
90171–18M04	34 – 16
90173–06001	24 – 7
90179–08003	21 – 3
90183–061A8	24 – 8
90185–05002	34 – 10
90185–06M07	26 – 15
90185–09M01	35 – 11
90185–14M00	28 – 31
90185–22M11	27 – 15
90201–06068	26 – 12
90201–10060	27 – 17
90201–10M76	35 – 8
90201–11008	26 – 29
90201–12426	27 – 42
90201–13M01	27 – 41
90201–156J2	23 – 11
90201–15M58	28 – 20
90201–16M01	28 – 28
90201–16M55	28 – 19
90201–186F1	6 – 33

PART NO.	REF. NO.
90201–186F1	39 – 14
90201–22M01	33 – 22
90201–26M59	27 – 14
90201–35008	28 – 17
90201–38M60	28 – 9
90202–06015	26 – 20
90202–08M41	26 – 13
90202–16061	34 – 3
90202–32M19	28 – 18
90202–40M47	28 – 12
90206–15M18	23 – 12
90206–22M19	33 – 23
90249–06M19	27 – 31
90250–08M07	33 – 55
90280–04M05	33 – 32
	40 – 30
90282–04M00	33 – 68
90338–25004	3 – 12
90340–08002	33 – 7
90340–14M06	5 – 9
	32 – 5
90340–18M09	6 – 32
90344–51019	5 – 4
90386–08008	26 – 5
90386–10001	26 – 25
	26 – 28
90386–10M16	27 – 29
90386–15M73	23 – 10
90386–22M98	27 – 20
	27 – 36
90386–25M31	27 – 13
90386–38M32	28 – 11
90387–05004	37 – 4
90387–06176	17 – 7
	17 – 12
	26 – 4
90387–06263	32 – 8
90387–06283	10 – 1
90387–06289	10 – 22
	10 – 34
	14 – 17
90387–06M43	24 – 11
90387–06M69	16 – 17
90387–07028	24 – 6
90387–08M37	23 – 20
90387–08M45	2 – 7
90387–10094	2 – 5
90387–10M05	27 – 32

PART NO.	REF. NO.
90387–11005	5 – 18
90387–14004	28 – 35
90430–06M03	5 – 15
	6 – 19
90430–08003	1 – 16
	33 – 9
	40 – 11
90430–14115	5 – 10
	39 – 2
90430–14M09	1 – 7
	32 – 6
	40 – 3
90445–07018	31 – 34
90445–09008	7 – 4
90445–09120	11 – 3
90445–10056	11 – 8
90445–10057	7 – 14
90462–12013	25 – 16
90464–07M41	11 – 2
90464–09008	18 – 21
90464–09020	7 – 10
90464–09130	10 – 26
	16 – 21
	16 – 25
90464–09142	7 – 9
90464–09M21	7 – 5
90464–09M31	7 – 12
90464–10011	11 – 17
90464–11121	10 – 24
90464–12002	16 – 4
90464–12010	7 – 8
	13 – 3
90464–12183	9 – 10
	9 – 22
	18 – 8
90464–13013	13 – 19
90464–13249	18 – 20
	19 – 4
	23 – 27
90464–13260	13 – 18
90464–15007	13 – 5
90464–16001	11 – 12
	11 – 26
	11 – 27
90464–16003	13 – 4
90464–18004	11 – 25
	13 – 17
	25 – 15

PART NO.	REF. NO.
90464–18246	18 – 10
	25 – 14
90464–20181	6 – 35
	9 – 21
	13 – 1
	16 – 22
	17 – 15
	18 – 19
	19 – 3
	21 – 10
90464–20258	23 – 31
90464–21256	25 – 9
90464–26001	20 – 16
90464–28003	20 – 17
90464–32002	18 – 9
90464–99004	9 – 8
90465–08M63	13 – 6
	27 – 22
90465–08M83	7 – 16
90465–11M10	7 – 7
	10 – 25
	11 – 4
	11 – 5
	11 – 9
	13 – 14
	13 – 16
	14 – 5
	14 – 20
	25 – 3
	25 – 10
	26 – 2
	27 – 16
	28 – 5
	31 – 33
	37 – 5
	38 – 4
90465–11M59	6 – 24
	6 – 48
	20 – 4
90465–13M18	37 – 6
90465–13M97	16 – 9
90467–09M09	11 – 10
90467–120A7	13 – 9
90467–140A9	13 – 10
90467–141A2	13 – 13
90468–18008	26 – 14
	26 – 19
90468–180A0	26 – 30

PART NO.	REF. NO.
90480–12314	10 – 2
	16 – 14
	19 – 8
90480–13163	23 – 28
90480–13M24	24 – 10
90480–14031	10 – 33
90480–15013	14 – 16
90480–16009	24 – 5
90480–16025	16 – 13
90480–20M05	6 – 10
90480–22M81	23 – 19
90501–16M11	6 – 9
90501–16M37	33 – 51
90506–16003	27 – 34
90506–18025	8 – 20
90506–22001	23 – 16
91312–04020	29 – 57
91312–05035	29 – 63
91380–06025	29 – 67
91490–40030	34 – 17
91609–16010	29 – 11
91690–30020	27 – 33
91690–40010	3 – 10
	3 – 27
91809–08006	5 – 6
91814–18002	3 – 3
92903–08100	18 – 25
92990–06100	2 – 10
92990–08600	2 – 6
92990–18200	34 – 15
92995–05100	9 – 17
92995–05600	9 – 18
92995–14600	28 – 33
93101–28M16	33 – 38
	40 – 17
93101–30M17	33 – 65
	40 – 19
93102–38008	8 – 16
	39 – 19
93102–85008	4 – 4
	39 – 18
93106–09014	33 – 17
	40 – 13
93106–19001	29 – 5
93210–064A5	29 – 40
	29 – 50
93210–07003	33 – 14
	40 – 10
93210–07N51	29 – 47
93210–08001	3 – 30
	39 – 17
93210–09165	26 – 24
	29 – 16
93210–11N52	29 – 21
93210–12327	29 – 35
93210–12648	3 – 16
	39 – 9
93210–12N52	29 – 38
93210–13M63	6 – 4
	23 – 29
	39 – 10
93210–19MJ3	32 – 20
	39 – 23
93210–24M79	6 – 43
	39 – 24
93210–25552	3 – 11
	32 – 17
	39 – 6
	39 – 21
93210–25647	3 – 13
	39 – 7
93210–29375	29 – 28
93210–357A3	6 – 45
	39 – 25
93210–37160	33 – 28
	40 – 15
	40 – 24
93210–37MH7	28 – 10
93210–55M14	33 – 42
	40 – 18
93210–58144	33 – 16
	40 – 12
93210–68N50	29 – 14
93210–86M38	33 – 27
	40 – 14
	40 – 23
93210–97M55	33 – 66
	40 – 20
93311–928U5	33 – 3
93315–43061	33 – 64
93317–330U2	33 – 39
93332–00048	33 – 59
93341–440U5	33 – 62
93341–465U4	33 – 5
93341–930V2	33 – 41
93390–000U2	33 – 4
93410–22M11	27 – 37
93410–37M04	28 – 14
93420–36M01	31 – 24
93501–08001	29 – 49
	29 – 58
93503–16003	29 – 43
	33 – 54
93505–32038	29 – 64
93507–32009	33 – 52
93511–32017	33 – 53
93604–09066	26 – 22
93604–10011	29 – 56
93605–10108	8 – 10
	8 – 12
93606–12019	4 – 3
	5 – 5
	33 – 35
	40 – 28
93606–19M23	31 – 15
93608–16M16	31 – 4
	31 – 22
	32 – 4
	34 – 4
93700–06002	27 – 10
	27 – 23
94702–00400	1 – 18
	5 – 25
95022–06035	16 – 10
95333–08600	18 – 24
95380–06600	2 – 11
	10 – 32
95380–12600	27 – 43
95380–14700	35 – 7
95604–14200	28 – 22
95780–08300	2 – 8
95780–10300	28 – 7
95812–06025	32 – 10
95D75–06025	9 – 4
	9 – 6
95D75–08030	26 – 8
95D75–08035	17 – 4
95D95–06010	13 – 7
	27 – 38
	27 – 39
95D95–06012	7 – 17
	9 – 20
	10 – 19
	14 – 18
95D95–06012	18 – 15
	19 – 2
	20 – 14
	23 – 18
	25 – 13
	25 – 17
95D95–06014	23 – 4
95D95–06016	10 – 29
	16 – 20
	16 – 24
	17 – 9
	18 – 18
	21 – 11
	32 – 21
95D95–06020	10 – 5
	17 – 2
95D95–06025	14 – 7
	19 – 6
95D95–06030	5 – 24
	16 – 11
95D95–06040	25 – 21
95D95–06065	25 – 19
95D95–08012	23 – 15
95D95–08016	18 – 23
95D95–08025	5 – 16
97513–08545	21 – 2
97595–05520	16 – 8
97602–04316	30 – 9
97780–50620	17 – 29
97780–60520	25 – 11
97780–60620	17 – 16
	17 – 32
97885–05016	9 – 16
97980–06216	31 – 26
97985–04308	20 – 3
97985–06212	27 – 9
97985–06216	28 – 4
97D95–06010	27 – 26
97D95–06012	31 – 29
97E75–06516	8 – 22
97E75–06520	26 – 17
	26 – 27
97E75–06540	32 – 16
97E75–08535	31 – 14
	32 – 3
97E75–08540	6 – 20
97E75–08560	9 – 2
	31 – 11
97E75–10535	31 – 6
97E75–10545	31 – 3
97E95–06510	27 – 6
97E95–06516	20 – 2
	21 – 1
	37 – 2
97E95–06520	18 – 7
	19 – 11
97E95–06530	27 – 4
97E95–06535	18 – 3
97E95–06550	26 – 26
97E95–06610	18 – 6
97E95–08520	27 – 12
97E95–08525	33 – 44
97E95–10645	34 – 5
98507–04008	12 – 34
98780–04016	3 – 9
	3 – 28
99001–08600	33 – 20
99530–08012	16 – 7
99590–10114	21 – 7