YAMAHA

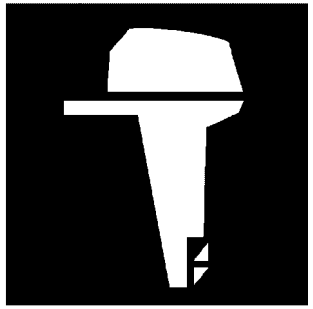

PARTS CATALOGUE
CATALOGUE DE PIECES DETACHEES

F40GET'22 (6CYD)

YAMAHA
GENUINE
Parts & Accessories

1W6CY-300FA

( )

F40GET
PARTS CATALOGUE
©2022 by Yamaha Motor Co., Ltd.
1st edition, April 2022
All rights reserved.
Any reprinting or unauthorized use
without the written permission of
Yamaha Motor Co., Ltd.
is expressly prohibited.
Printed in Japan.

F40GET
CATALOGUE DE PIECES DETACHEES
©2022 par Yamaha Motor Co., Ltd.
1re édition, avril 2022
Tous droits réservés
Toute réimpression ou utilisation
non autorisée sans la permission écrite
de la Yamaha Motor Co., Ltd.
est formellement interdite.
Imprimé au Japon

FOREWORD

This Parts Catalogue is related to the parts for the model(s) on the cover page. When you are ordering replacement parts, please refer to this Parts Catalogue and quote both part numbers and part names correctly.

1. Modifications or additions which have been made after the issue of the Parts Catalogue will be announced in the Parts News.
   It is advisable that you make the necessary corrections to the Parts Catalogue according to the Parts News.

2. Abbreviations
   The following abbreviations are used in this Parts Catalogue.
   "UR" Use specified parts number.
   "UN" Use as many as needed.
   "AP" Alternate Parts
   "LM" Locally Made (Parts need to be ordered locally)
   "F#" Frame No. (Applicable machine No.)
   "O/S" Over Size

3. The number of components for assembly
   - Parts, which are to be supplied in an assembly, are listed with a dot (.) in front of the part name as shown below.
   - The numeral appearing to the right of each component part indicates the quantity of parts for each assembly unit.

PART NO.	DESCRIPTION	Q'TY	REMARKS
2F5–83310–60	FRONT FLASHER LIGHT ASSY	2	
115–83311–60	.BULB (6V–18W)	1	

4. Applicable colours of graphics are represented in the "REMARKS" as shown below.

PART NO.	DESCRIPTION	Q'TY	REMARKS
2N4–24110–00–X5	FUEL TANK COMP.	2	MXR
3J1–24240–10	.GRAPHIC, FUEL TANK	1	FOR MXR

5. Note that the illustrations for reference in finding parts numbers are not to be used for assembling. When assembling, please use the applicable service manual.

6. The asterisk (*) before a reference number indicates modified items after the first edition.

7. Applicable Serial No.
   Engine Serial No.

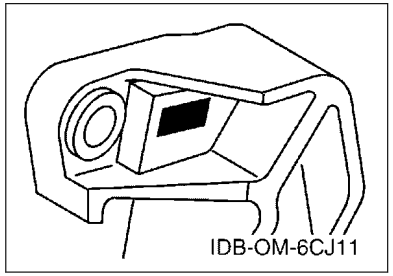

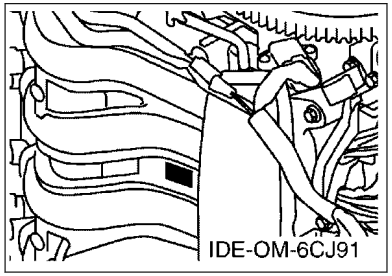

8. Applicable Engine Starting Serial No.

Model	Serial No.	Model	Serial No.
F40G	6CY-1011694		

9. Applicable Colour Code

Abbreviation	Colour Name	Colour Code
DBN1	DARK BLUISH GRAY 1	008D

10. Quantity Column Information

Column No.	Name Of Q'ty Column	Applicable Model
1	ET	F40GET
2	ET1	F40GET1

AVANT–PROPOS

Ce catalogue de pièces détachées concerne les pièces pour le(s) modèle(s) indiqué(s) sur la page de couverture. Lorsque vous commandez des pièces de rechange, veuillez vous référer à ce catalogue de pieces détachées et indiquer clairement les numéros et les noms des pièces détachées.

1. Les modifications ou ajouts ayant été effectués après la parution du catalogue de pièces détachées seront décrits dans les Bulletins d'information concernant les pièces détachées.
   Il est recommandé que vous apportiez les corrections nécessaires au catalogue des pièces détachées en vous référant aux Bulletins d'information.

2. Abréviations
   Dans ce catalogue, les abréviations suivantes sont utilisées:
   "UR" Utiliser le numéro de pièces spécifié.
   "UN" Utiliser autant que nécessaire.
   "AP" Pièces de substitution
   "LM" Fabrication locale (les pièces doivent être commandées localement.)
   "F#" N° de cadre (applicable au N° de série)
   "O/S" Surdimensionné

3. Nombre de pièces d'un assemblage
   - Les pièces fournies comme composants d'un assemblage sont précédées d'un point (.) de la manière indiquée ci–dessous.
   - Le chiffre apparaissant à la droite de chaque composant indique la quantité de pièces pour chaque unité d'assemblage.

N° PIECES	DESCRIPTION	QTE	REMARQUES
2F5–83310–60	ENS. CLIGNOTANT AVANT	2	
115–83311–60	.AMPOULE (6V–18W)	1	

4. Les couleurs concernant les graphiques sont indiquées dans la colonne "REMARQUES", comme indiqué ci–dessous.

N° PIECES	DESCRIPTION	QTE	REMARQUES
2N4–24110–00–X5	RESERVOIR A ESSENCE.	2	MXR
3J1–24240–10	.GRAPHIQUE	1	POUR MXR

5. Veuillez noter que les illustrations sont indiquées à titre de référence pour trouver les numéros de pièces, non pour être utilisées lors de l'assemblage. Lors de l'assemblage, veuillez utiliser le manuel d'entretien adéquat.

6. L'astérisque (*) placé devant un numéro de référence indique des éléments qui ont été modifiés après la première édition.

7. N° de série applicable
   N° de Série du moteur

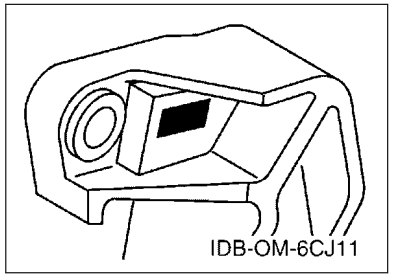

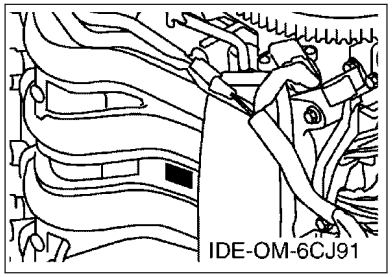

8. N° de série initial du moteur applicable

Modèle	N° de série	Modèle	N° de série
F40G	6CY-1011694		

9. Code couleur applicable

Abréviation	Nom de la couleur	Code couleur
DBN1	DARK BLUISH GRAY 1	008D

10. Informations relatives à la colonne Quantité

N° de la colonne	Nom de la colonne Qté	Modèle applicable
1	ET	F40GET
2	ET1	F40GET1

CONTENTS

SCHEDULED SERVICE PARTS.....1
TOP COWLING 1.....2
TOP COWLING 2.....3
CYLINDER & CRANKCASE 1.....4
CRANKSHAFT & PISTON.....6
CYLINDER & CRANKCASE 2.....7
VALVE.....8
INTAKE 1.....9
INTAKE 2.....10
INTAKE 3.....11
FUEL INJECTION PUMP 1.....12
FUEL INJECTION PUMP 2.....13
OIL PUMP.....14
FUEL.....15
GENERATOR.....17
ELECTRICAL 1.....19
ELECTRICAL 2.....20
ELECTRICAL 3.....21
ELECTRICAL 4.....22
STARTING MOTOR.....23
BOTTOM COWLING 1.....24
BOTTOM COWLING 2.....26
CONTROL.....27
BRACKET 1.....29
BRACKET 2.....31
POWER TRIM & TILT ASSY 1.....33
POWER TRIM & TILT ASSY 2.....36
UPPER CASING.....37
OIL PAN.....38
LOWER CASING & DRIVE 1.....39
LOWER CASING & DRIVE 2.....42
FUEL TANK.....43
STEERING GUIDE.....44
OPTIONAL PARTS 1.....45
OPTIONAL PARTS 2.....46
REPAIR KIT 1.....47
REPAIR KIT 2.....48

INDEX

NUMERICAL INDEX.....50

TABLE DES MATIERES

PIECES MAINTENANCE PERIODIQUE.....1
CAPOT SUPERIEUR 1..... 2
CAPOT SUPERIEUR 2..... 3
CYLINDRE & CARTER 1..... 4
VILEBREQUIN & PISTON.....6
CYLINDRE & CARTER 2..... 7
SOUPAPE..... 8
ADMISSION 1.....9
ADMISSION 2.....10
ADMISSION 3.....11
POMPE A INJECTEUR 1..... 12
POMPE A INJECTEUR 2..... 13
POMPE A HUILE.....14
CARBURANT..... 15
GENERATRICE.....17
PARTIE ELECTRIQUE 1.....19
PARTIE ELECTRIQUE 2.....20
PARTIE ELECTRIQUE 3.....21
PARTIE ELECTRIQUE 4.....22
DEMARREUR ELECTRIQUE.....23
CAPOT INFERIEUR 1.....24
CAPOT INFERIEUR 2.....26
COMMANDE..... 27
SUPPORT 1..... 29
SUPPORT 2..... 31
PUISSANCE PARER ET INCLINER 1..... 33
PUISSANCE PARER ET INCLINER 2..... 36
FOURREAU.....37
VENTILATEUR D'HUILE..... 38
BOITIER D'HELICE TRANSMISSION1.....39
BOITIER D'HELICE TRANSMISSION2.....42
RESERVOIR A CARBURANT.....43
FIXATION DE DIRECTION..... 44
PIECES OPTIONNELLES 1.....45
PIECES OPTIONNELLES 2.....46
KITS DE REPARATION 1..... 47
KITS DE REPARATION 2..... 48

INDEX

INDEX NUMERIQUE.....50

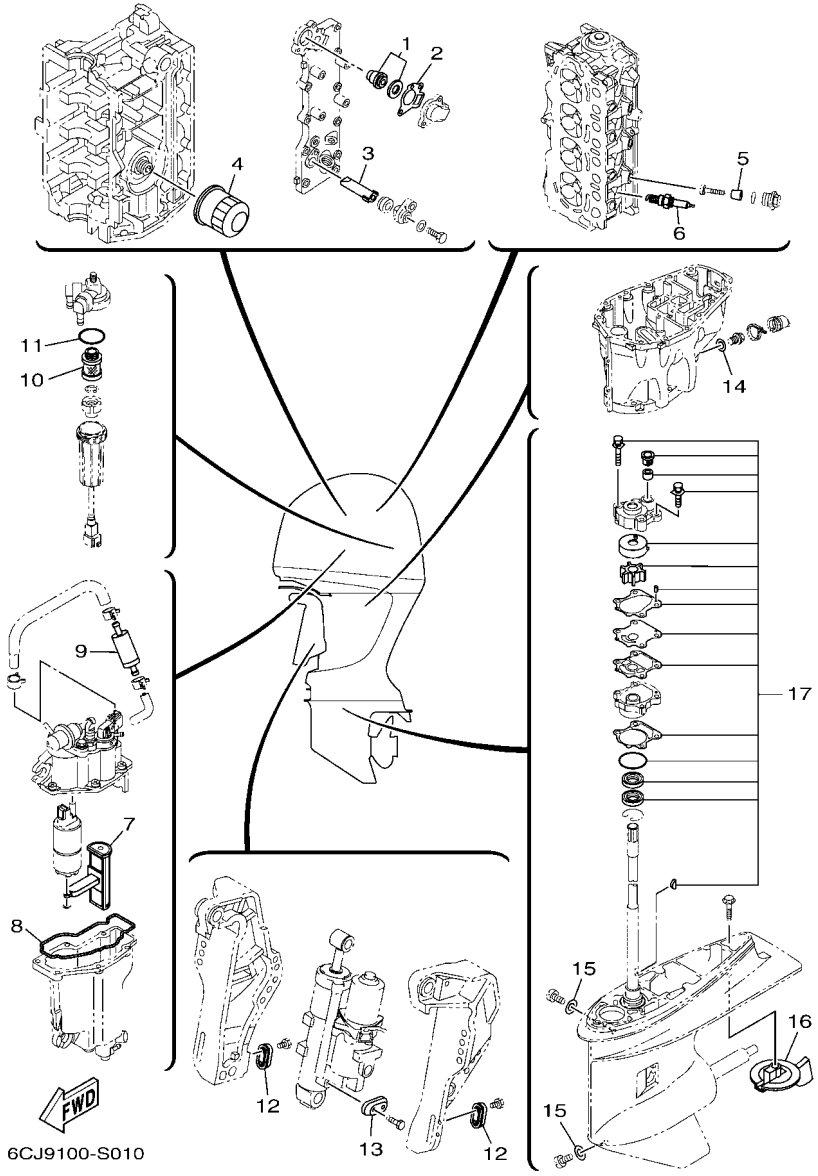

FIG. 1 SCHEDULED SERVICE PARTS — PIECES MAINTENANCE PERIODIQUE

REF. NO.	PART NO. N° PIECES	DESCRIPTION DESCRIPTION	ET	ET1				REMARKS REMARQUES
1	6G8–12411–03	THERMOSTAT THERMOSTAT	1	1				
2	62Y–12414–00	GASKET, COVER JOINT, COUVERCLE	1	1				
3	62Y–11325–00	ANODE ANODE	1	1				
4	5GH–13440–80	ELEMENT ASSY, OIL CLEANER ELEMENT, FILTRE A HUILE	1	1				
5	6G8–11325–00	ANODE ANODE	3	3				
6	94702–00429	PLUG, SPARK (NGK LKR7E) BOUGIE D,ALLUMAGE (NGK LKR7E)	4	4				
7	6C5–13915–00	FILTER FILTRE	1	1				
8	6C5–14984–10	GASKET, FLOAT CHAMBER JOINT, CUVE DE FLOTTEUR	1	1				
9	6C5–24251–00	STRAINER 1 FILTRE 1	1	1				
10	6D8–24563–00	ELEMENT, FILTER ELEMENT, FILTRE	1	1				
11	6D8–24564–00	GASKET JOINT	1	1				
12	65W–45251–00	ANODE ANODE	2	2				
13	65W–45251–00	ANODE ANODE	1	1				
14	90430–14M09	GASKET JOINT	1	1				
15	90430–08003	GASKET JOINT	2	2				
16	67F–45371–00	TAB-TRIM ANODE DERIVE	1	1				
17	6CJ–W0078–01	WATER PUMP REPAIR KIT KIT DE REPARATION DE LA POMPE	1	1				

FIG. 2 TOP COWLING 1 — CAPOT SUPERIEUR 1

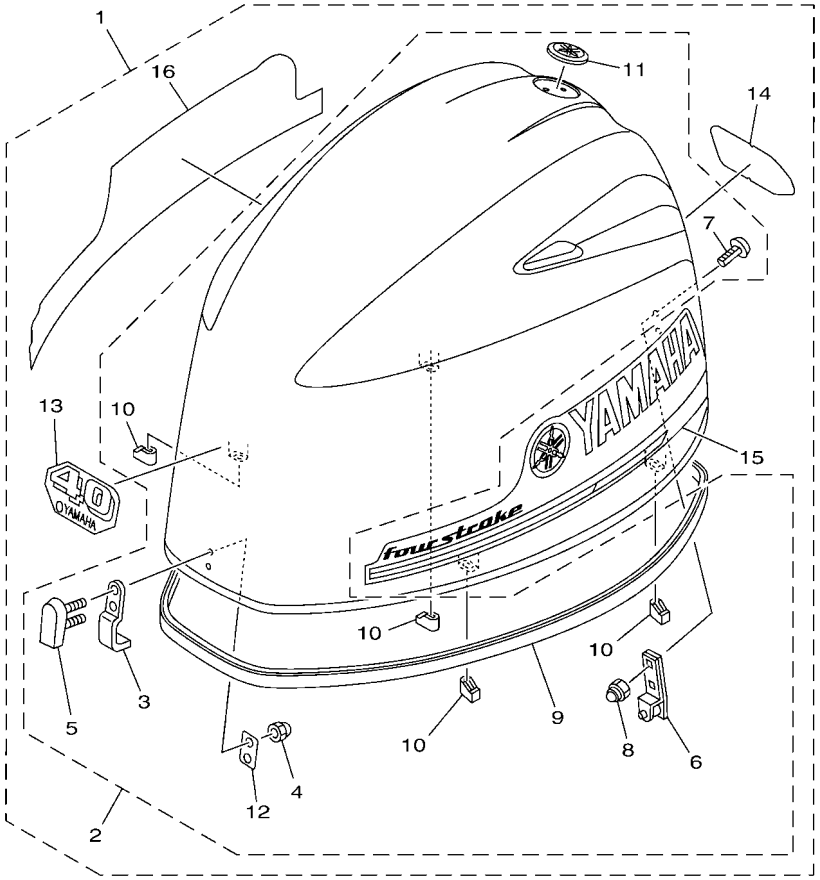

6CY8300-R020

REF. NO.	PART NO. N° PIECES	DESCRIPTION DESCRIPTION	ET	ET1				REMARKS REMARQUES
1	6CY–42610–03	TOP COWLING ASSY CAPOT (ENS.)	1					
2	6CJ–4261A–01	.TOP COWLING W/O GRAPHICS .CAPOT SUPERIEUR SANS GRAPHIQUE	1					
3	6BG–42651–00	..HOOK ..CROCHET	1					
4	95380–05800	..NUT ..ECROU	2					
5	6BG–42851–00	..COVER, CLAMP ..COUVERCLE, BRIDE	1					
6	6BG–42652–00	..HOOK ..CROCHET	1					
7	90109–06047	..BOLT ..BOULON	2					
8	90185–06M05	..NUT, SELF-LOCKING ..ECROU,AUTO-BLOQUANT	2					
9	6CJ–42615–00	..SEAL ..JOINT	1					
10	6BG–42662–01	..DAMPER ..AMORTISSEUR	4					
11	6AH–42697–10	..TUNING FORK MARK ..MARQUE, YAMAHA	1					
12	6BG–42649–00	..HOLDER, CLAMP BAND ..SUPPORT, SANDOW DE SERRAGE	1					
13	6BG–42677–00	.GRAPHIC, FRONT .ADHESIF, AVANT	1					
14	6BG–42678–20	.GRAPHIC, REAR .ADHESIF, ARRIERE	1					
15	6CJ–42675–00	.GRAPHIC, SIDE 1 .EMBLEME	1					
16	6CJ–42676–00	.GRAPHIC, SIDE 2 .EMBLEME	1					

FIG. 3 TOP COWLING 2 — CAPOT SUPERIEUR 2

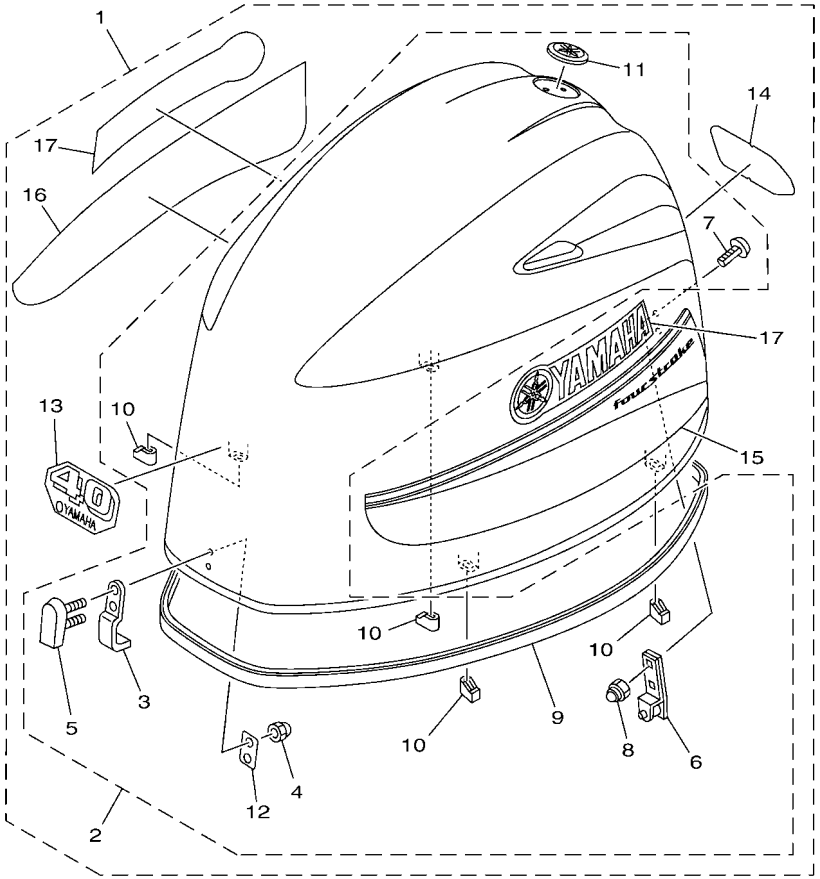

6CYB300-U030

REF. NO.	PART NO. N° PIECES	DESCRIPTION DESCRIPTION	ET	ET1				REMARKS REMARQUES
1	6CY–42610–21	TOP COWLING ASSY CAPOT (ENS.)		1				
2	6CY–4261A–21	.TOP COWLING W/O GRAPHICS .CAPOT SUPERIEUR SANS GRAPHIQUE		1				
3	6BG–42651–00	..HOOK ..CROCHET		1				
4	95380–05800	..NUT ..ECROU		2				
5	6BG–42851–00	..COVER, CLAMP ..COUVERCLE, BRIDE		1				
6	6BG–42652–00	..HOOK ..CROCHET		1				
7	90109–06047	..BOLT ..BOULON		2				
8	90185–06M05	..NUT, SELF-LOCKING ..ECROU,AUTO-BLOQUANT		2				
9	6CJ–42615–00	..SEAL ..JOINT		1				
10	6BG–42662–01	..DAMPER ..AMORTISSEUR		4				
11	6AH–42697–10	..TUNING FORK MARK ..MARQUE, YAMAHA		1				
12	6BG–42649–00	..HOLDER, CLAMP BAND ..SUPPORT, SANDOW DE SERRAGE		1				
13	6BG–42677–20	.GRAPHIC, FRONT .ADHESIF, AVANT		1				
14	6BG–42678–30	.GRAPHIC, REAR .ADHESIF, ARRIERE		1				
15	6CJ–42675–10	.GRAPHIC, SIDE 1 .EMBLEME		1				
16	6CJ–42676–10	.GRAPHIC, SIDE 2 .EMBLEME		1				
17	6D6–42681–00	.MARK, COWLING .ADHESIF, CAPOT		2				

FIG. 4 CYLINDER & CRANKCASE 1 — CYLINDRE & CARTER 1

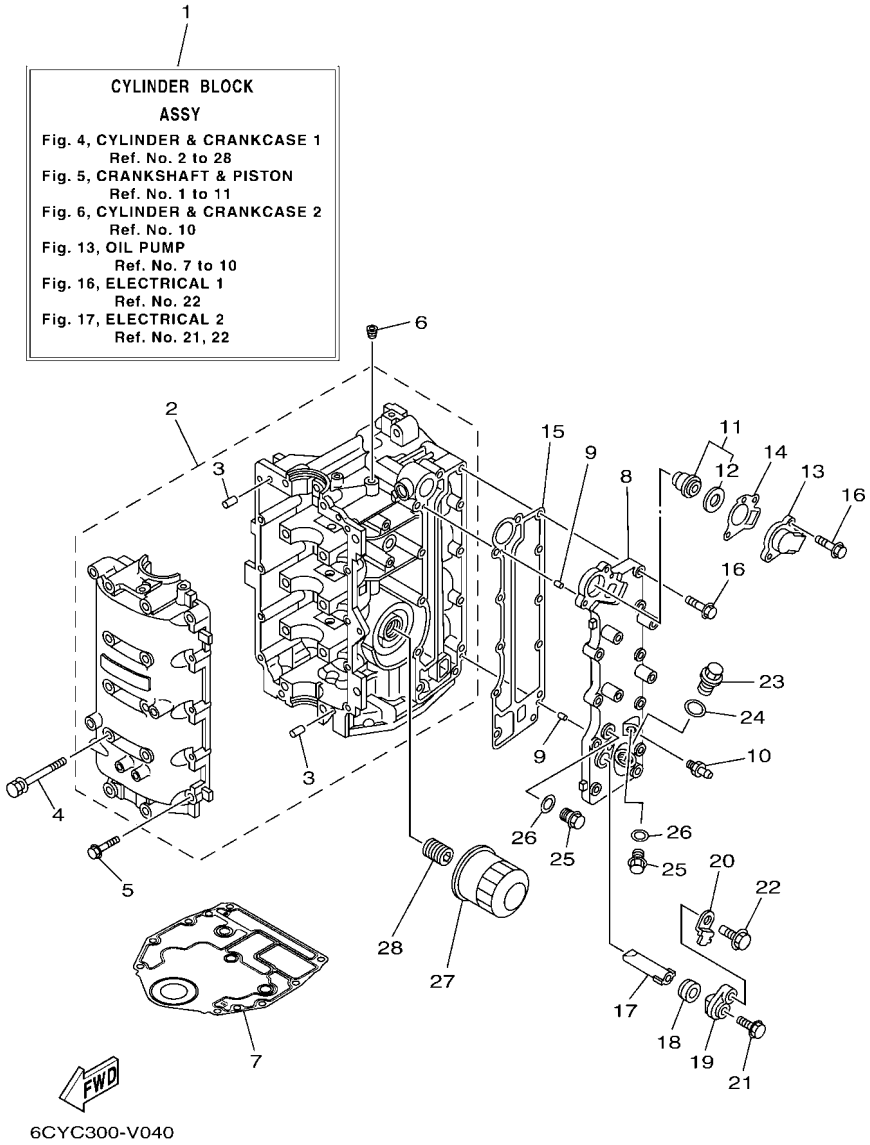

REF. NO.	PART NO. N° PIECES	DESCRIPTION DESCRIPTION	ET	ET1				REMARKS REMARQUES
1	6CJ–W009B–04–9S	CYLINDER BLOCK ASSY CYLINDRE GROUPE (ENS.)	1	1				
2	6CJ–15100–01	CRANKCASE ASSY CARTER DE MOTEUR COMPLET	1	1				
3	93606–12019	.PIN, DOWEL .GOUPILLE	4	4				
4	90119–08154	BOLT, WITH WASHER BOULON, AVEC RONDELLE	10	10				
5	97513–06535	BOLT, WITH WASHER VIS HEXAGONAL AVC RONDELLE	10	10				
6	90344–51003	PLUG, TAPER SCREW PLOT, FILETE CONIQUE	1	1				
7	6BG–11351–01	GASKET, CYLINDER JOINT, D'EMBASE	1	1				
8	6C5–41113–11–9S	OUTER COVER, EXHAUST COUVERCLE, ECHAPPEMENT	1	1				
9	93604–10M03	PIN, DOWEL CLAVETTE	2	2				
10	62Y–12481–10	PIPE 1 DURITE 1	1	1				
11	6G8–12411–03	THERMOSTAT THERMOSTAT	1	1				
12	688–12412–00	.SEAL, THERMOSTAT .JOINT, THERMOSTAT	1	1				
13	6C5–12413–00–9S	COVER, THERMOSTAT COUVERCLE, THERMOSTAT	1	1				
14	62Y–12414–00	GASKET, COVER JOINT, COUVERCLE	1	1				
15	6C5–41114–10	GASKET, EXHAUST OUTER COVER JOINT, COUVERCLE D'ECHAPPEMENT	1	1				
16	90119–06MA5	BOLT, WITH WASHER BOULON, AVEC RONDELLE	12	12				
17	62Y–11325–00	ANODE ANODE	1	1				
18	66M–11328–01	GROMMET, ANODE PASSE-FIL	1	1				
19	66M–11327–00–94	COVER, ANODE COUVERCLE ANODE	1	1				
20	66M–12535–00	PLATE PLAQUE	1	1				
21	97595–05512	BOLT, WITH WASHER VIS HEXAGONAL AVC RONDELLE	1	1				
22	97E95–06520	BOLT, HEXAGON W/W DEEP RECESS VIS HEXAGONAL AVC RONDELLE	1	1				
23	90340–18M09	PLUG, STRAIGHT SCREW PLOT, FILETE DROIT	1	1				
24	90201–186F1	WASHER, PLATE RONDELLE, PLATE	1	1				
25	90340–14M06	PLUG, STRAIGHT SCREW PLOT, FILETE DROIT	2	2				
26	90430–14115	GASKET JOINT	2	2				
27	5GH–13440–80	ELEMENT ASSY, OIL CLEANER ELEMENT, FILTRE A HUILE	1	1				

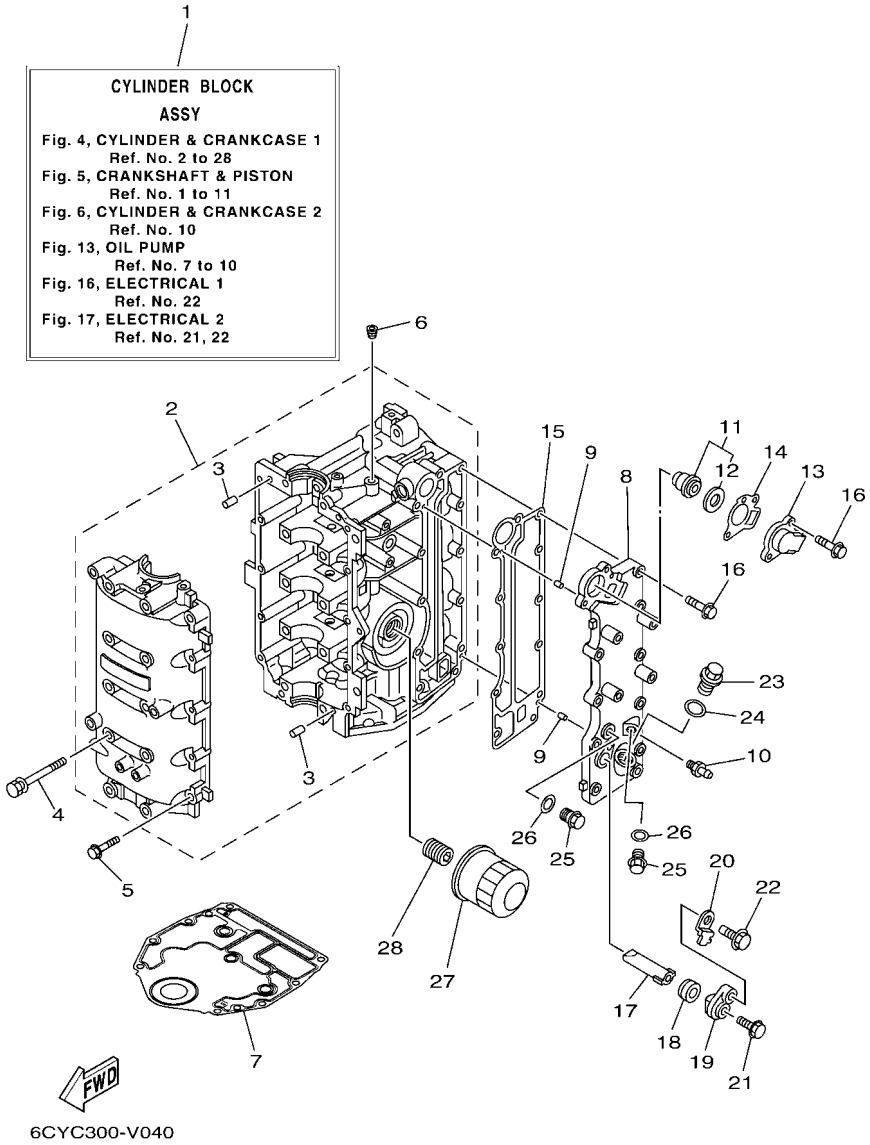

FIG. 4 CYLINDER & CRANKCASE 1 — CYLINDRE & CARTER 1

REF. NO.	PART NO. N° PIECES	DESCRIPTION DESCRIPTION	ET	ET1				REMARKS REMARQUES
28	6C5–12858–A0	BOLT, UNION BOULON, RACCORD	1	1				

FIG. 5 CRANKSHAFT & PISTON — VILEBREQUIN & PISTON

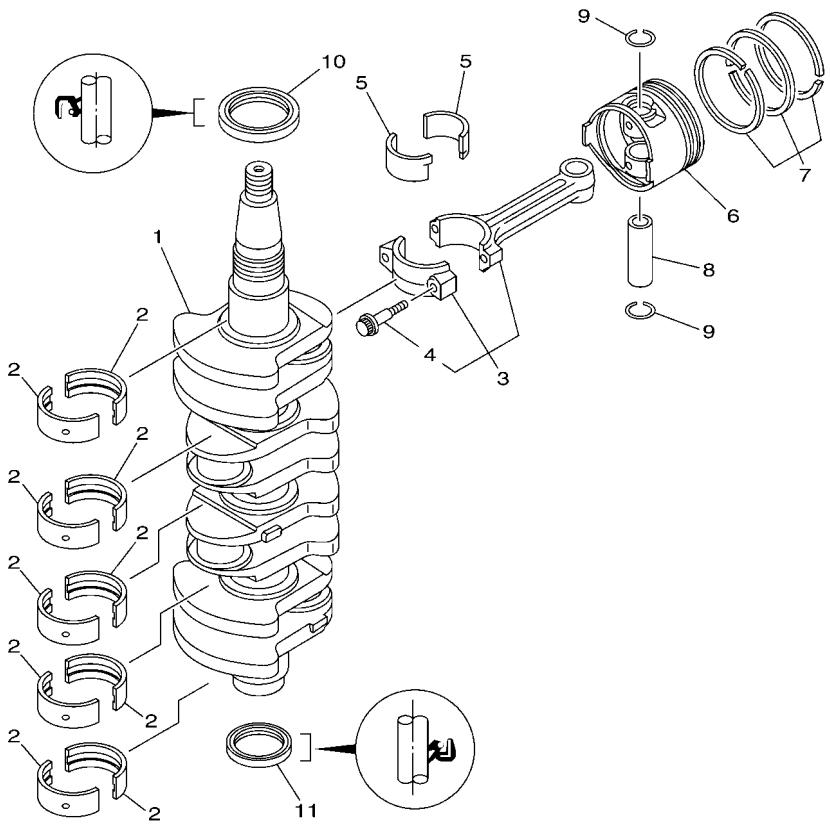

6C17110-K030

REF. NO.	PART NO. N° PIECES	DESCRIPTION DESCRIPTION	ET	ET1				REMARKS REMARQUES
1	6C5–11411–10	CRANKSHAFT VILEBREQUIN COMPLET	1	1				
2	6BG–11416–00	PLANE BEARING, CRANKSHAFT 1 COUSSINET DE VILEBREQUIN 1	10	10				UR YELLOW UR YELLOW
	6BG–11416–10	PLANE BEARING, CRANKSHAFT 1 COUSSINET DE VILEBREQUIN 1	10	10				UR RED UR RED
	6BG–11416–20	PLANE BEARING, CRANKSHAFT 1 COUSSINET DE VILEBREQUIN 1	10	10				UR PINK UR PINK
	6BG–11416–30	PLANE BEARING, CRANKSHAFT 1 COUSSINET DE VILEBREQUIN 1	10	10				UR GREEN UR GREEN
3	6C5–11650–10	CONNECTING ROD ASSY BIELLE COMPLETTE	4	4				
4	6C5–11654–00	.BOLT, CONNECTING ROD .BOULON, BIELLE	2	2				
5	6CJ–11656–00	PLANE BEARING, CONNECTING ROD ROULEMENT DE BIELLE	8	8				UR YELLOW UR YELLOW
	6CJ–11656–10	PLANE BEARING, CONNECTING ROD ROULEMENT DE BIELLE	8	8				UR RED UR RED
	6CJ–11656–20	PLANE BEARING, CONNECTING ROD ROULEMENT DE BIELLE	8	8				UR PINK UR PINK
	6CJ–11656–30	PLANE BEARING, CONNECTING ROD ROULEMENT DE BIELLE	8	8				UR GREEN UR GREEN
6	6CJ–11631–00–96	PISTON (STD) PISTON (STD)	4	4				
	6CJ–11635–00	PISTON (0.25MM O/S) PISTON (0.25MM O/S)	4	4				AP AP
	6CJ–11636–00	PISTON (0.50MM O/S) PISTON (0.50MM O/S)	4	4				AP AP
7	67C–11603–01	PISTON RING SET (STD) JEU DE SEGMENTS (STD)	4	4				
	67C–11604–01	PISTON RING SET (0.25MM O/S) JEU DE SEGMENTS (0.25MM O/S)	4	4				AP AP
	67C–11605–01	PISTON RING SET (0.50MM O/S) JEU DE SEGMENTS (0.50MM O/S)	4	4				AP AP
8	62Y–11633–00	PIN, PISTON AXE, PISTON	4	4				
9	93450–17129	CIRCLIP CIRCLIP	8	8				
10	93102–43004	OIL SEAL JOINT SPY	1	1				
11	93101–35002	OIL SEAL JOINT SPY	1	1				

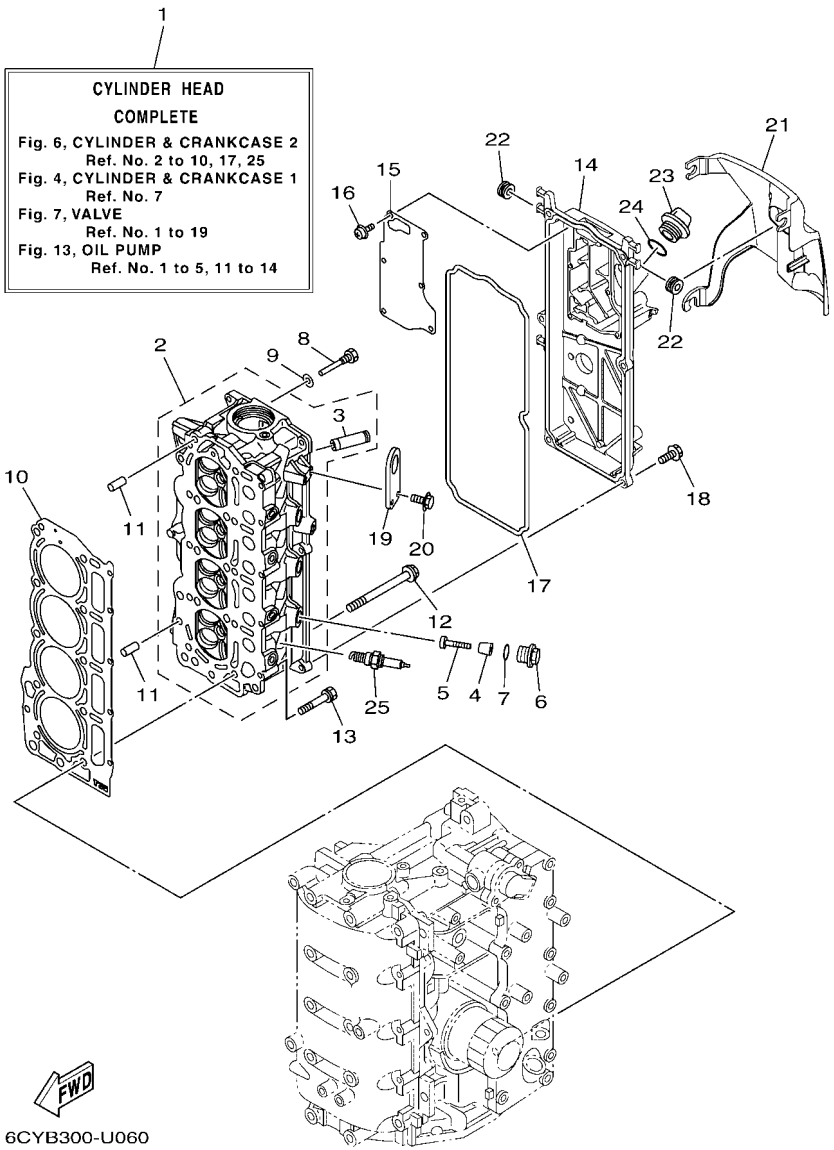

FIG. 6 CYLINDER & CRANKCASE 2 — CYLINDRE & CARTER 2

REF. NO.	PART NO. N° PIECES	DESCRIPTION DESCRIPTION	ET	ET1				REMARKS REMARQUES
1	6CJ–W009A–02–9S	CYLINDER HEAD COMPLETE CULASSE (ENS.)	1	1				
2	6CJ–11111–10–9S	HEAD, CYLINDER 1 CULASSE, 1	1	1				
3	6AH–11133–10	.GUIDE, VALVE 1 .GUIDE, SOUPAPE 1	16	16				
4	6G8–11325–00	ANODE ANODE	3	3				
5	98980–05025	SCREW, BIND VIS, DE PRESSION	3	3				
6	6G8–11197–A0	PLUG, BLIND PLOT, BORGNE	3	3				
7	93210–13M63	O-RING JOINT TORIQUE	3	3				
8	90109–06M65	BOLT BOULON	1	1				
9	90430–06014	GASKET JOINT	1	1				
10	6CJ–11181–00	GASKET, CYLINDER HEAD 1 JOINT, DE CULASSE 1	1	1				
11	99530–08012	PIN, DOWEL GOUJON, D'ASSEMBLAGE	2	2				
12	90105–09009	BOLT, FLANGE BOULON, A COLLERETTE	10	10				
13	90119–06MA6	BOLT, WITH WASHER BOULON, AVEC RONDELLE	5	5				
14	6CJ–11191–00–9S	COVER, CYLINDER HEAD 1 COUVERCLE, CULASSE 1	1	1				
15	6C5–11168–00	COVER, BREATHER COUVERCLE, RENIFLARD	1	1				
16	97607–04210	SCREW, WITH WASHER VIS, AVEC RONDELLE	6	6				
17	6CJ–11356–00	SEAL, CYLINDER 2 JOINT, SPY CYLINDRE	1	1				
18	97E95–06520	BOLT, HEXAGON W/W DEEP RECESS VIS HEXAGONAL AVC RONDELLE	6	6				
19	6CJ–11119–00	HANGER, ENGINE ANNEAU, LEVAGE	1	1				
20	97E95–06520	BOLT, HEXAGON W/W DEEP RECESS VIS HEXAGONAL AVC RONDELLE	2	2				
21	6CJ–11192–00	COVER, CYLINDER HEAD 2 COUVERCLE, CULASSE 2	1	1				
22	90480–12314	GROMMET PASSE-FIL	3	3				
23	6G8–15363–00	PLUG, OIL PLOT, HUILE	1	1				
24	93210–24M79	O-RING JOINT TORIQUE	1	1				
25	94702–00429	PLUG, SPARK (NGK LKR7E) BOUGIE D,ALLUMAGE (NGK LKR7E)	4	4				

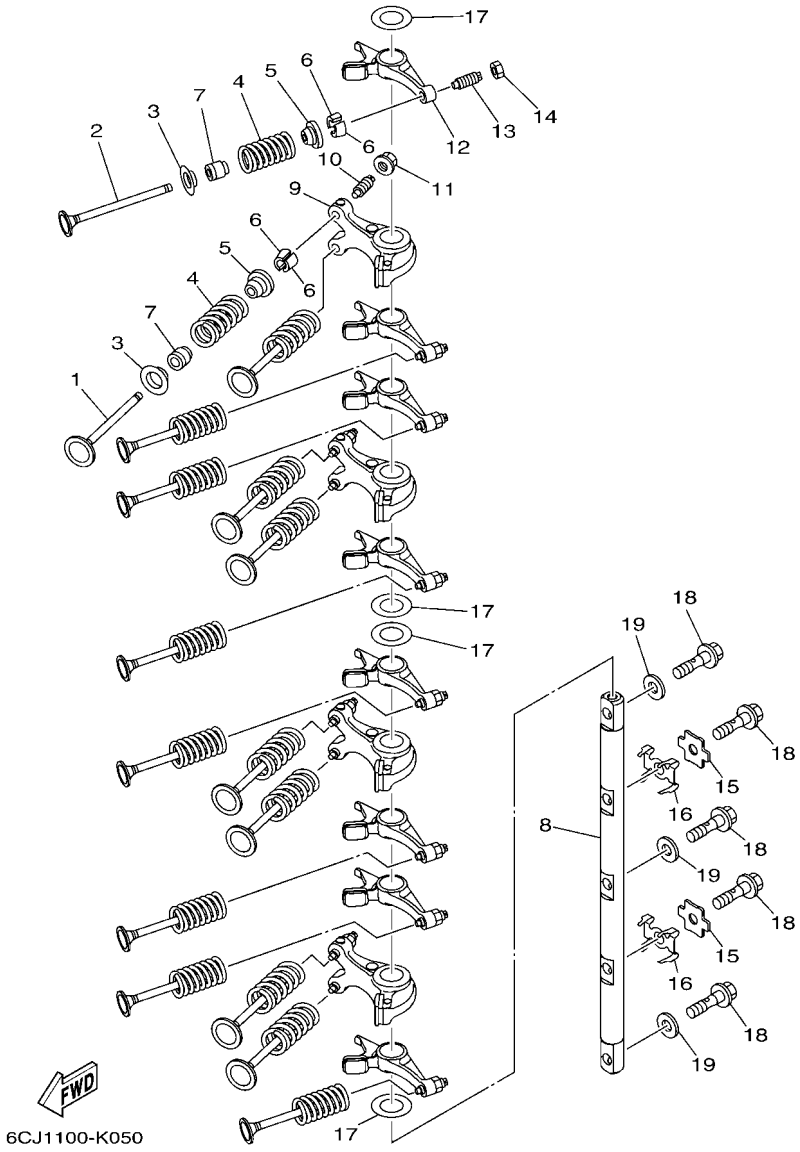

FIG. 7 VALVE — SOUPAPE

REF. NO.	PART NO. N° PIECES	DESCRIPTION DESCRIPTION	ET	ET1				REMARKS REMARQUES
1	6CJ–12111–00	VALVE, INTAKE SOUPAPE, ADMISSION	8	8				
2	6CJ–12121–10	VALVE, EXHAUST SOUPAPE, ECHAPPEMENT	8	8				
3	6CJ–12116–00	SEAT, VALVE SPRING SIEGE, RESSORT DE SOUPAPE	16	16				
4	6CJ–12113–00	SPRING, VALVE INNER RESSORT DE SOUPAPE, INTERNE	16	16				
5	3LD–12117–00	RETAINER, VALVE SPRING BUTEE DE RESSORT DE SOUPAPE	16	16				
6	3LD–12118–00	LOCK, VALVE SPRING RETAINER FRAISE, SOUPAPE	32	32				
7	51Y–12119–00	SEAL, VALVE STEM JOINT, QUEUE DE SOUPAPE	16	16				
8	6CJ–12146–00	SHAFT, ROCKER AXE, CULBUTEUR	1	1				
9	6CJ–12151–00	ARM, VALVE ROCKER CULBUTEUR	4	4				
10	6C5–12159–00	SCREW, VALVE ADJUSTING VIS, REGLAGE DE SOUPAPE	8	8				
11	6C5–12158–00	NUT, LOCK CONTRE-ECROU	8	8				
12	6CJ–12161–00	ARM, VALVE ROCKER 2 CULBUTEUR 2	8	8				
13	64J–12159–00	SCREW, VALVE ADJUSTING VIS, REGLAGE DE SOUPAPE	8	8				
14	62Y–12158–00	NUT, LOCK CONTRE-ECROU	8	8				
15	6CJ–12231–00	GUIDE, STOPPER 1 GUIDE, BUTEE 1	2	2				
16	6CJ–12233–00	PLATE, GUIDE STOPPER 1 PLAQUE, GUIDE BUTEE 1	2	2				
17	90201–16014	WASHER, PLATE RONDELLE, PLATE	4	4				
18	90401–08011	BOLT, UNION BOULON, RACCORD	5	5				
19	92990–08200	WASHER, PLAIN RONDELLE, PLATE	3	3				

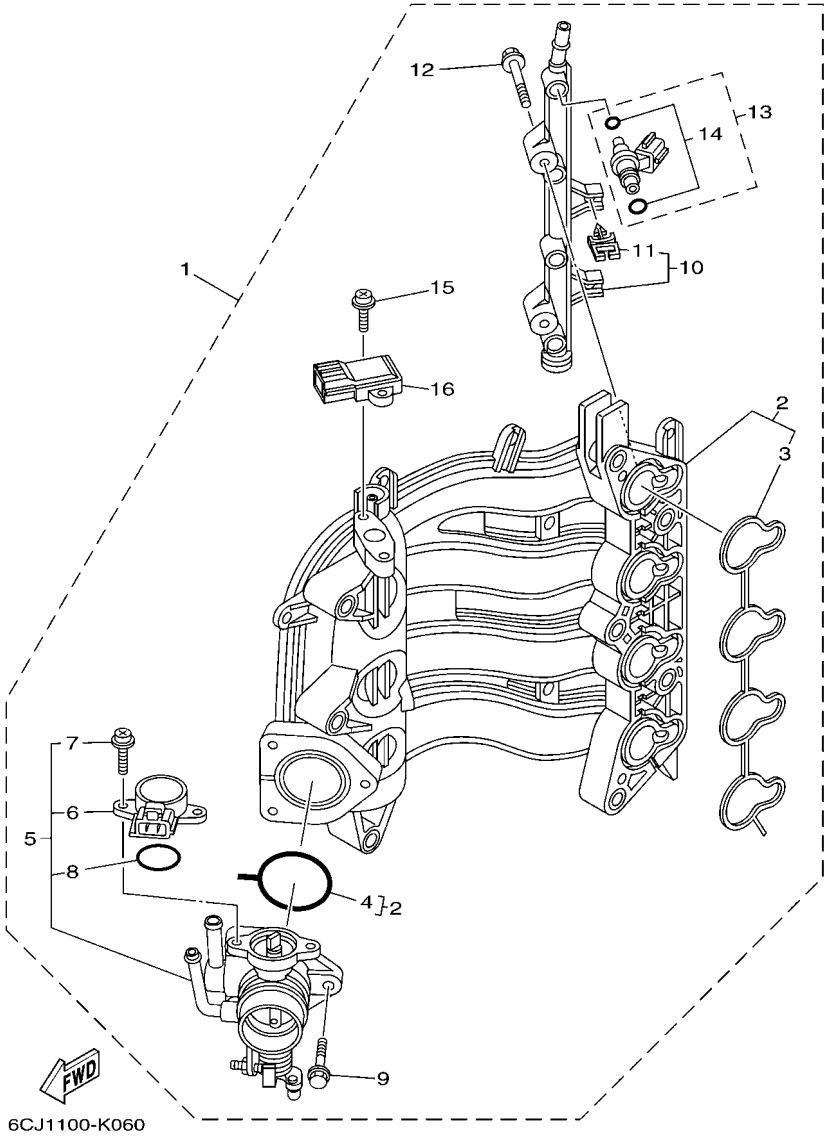

FIG. 8 INTAKE 1 — ADMISSION 1

REF. NO.	PART NO. N° PIECES	DESCRIPTION DESCRIPTION	ET	ET1				REMARKS REMARQUES
1	6CJ–14200–02	INTAKE ASSY ADMISSION (ENS.)	1	1				
2	6CJ–13641–01	.MANIFOLD, INTAKE 1 .TUBULURE, ADMISSION 1	1	1				
3	6C5–13645–00	..GASKET, MANIFOLD 1 ..JOINT, TUBULURE 1	1	1				
4	6C5–13557–00	..GASKET ..JOINT	1	1				
5	6CJ–13750–01	.THROTTLE BODY ASSY .CARTER D'ACCELERATEUR COMPLET	1	1				
6	6C5–85885–00	..THROTTLE SENSOR ASSY ..SENSITOMETRE (ENS.)	1	1				
7	6C5–81145–00	..SCREW 1 ..VIS 1	2	2				
8	6C5–8182L–00	..O-RING 1 ..JOINT TORIQUE 1	1	1				
9	6C5–14496–00	.BOLT .BOULON	3	3				
10	6C5–13161–00	.PIPE, DELIVERY 1 .DURITE REFOULEMENT 1	1	1				
11	90464–07M56	..CLAMP ..BRIDE	2	2				
12	6C5–14446–00	.BOLT .BOULON	2	2				
13	6C5–13761–00	.INJECTOR .INJECTEUR	4	4				
14	6C5–1410B–00	..PACKING KIT ..POCHETTE DE JOINTS	1	1				
15	6C5–81146–10	.SCREW 2 .VIS 2	2	2				
16	68F–83688–00	.SENSOR ASSY .SONDE (ENS.)	1	1				

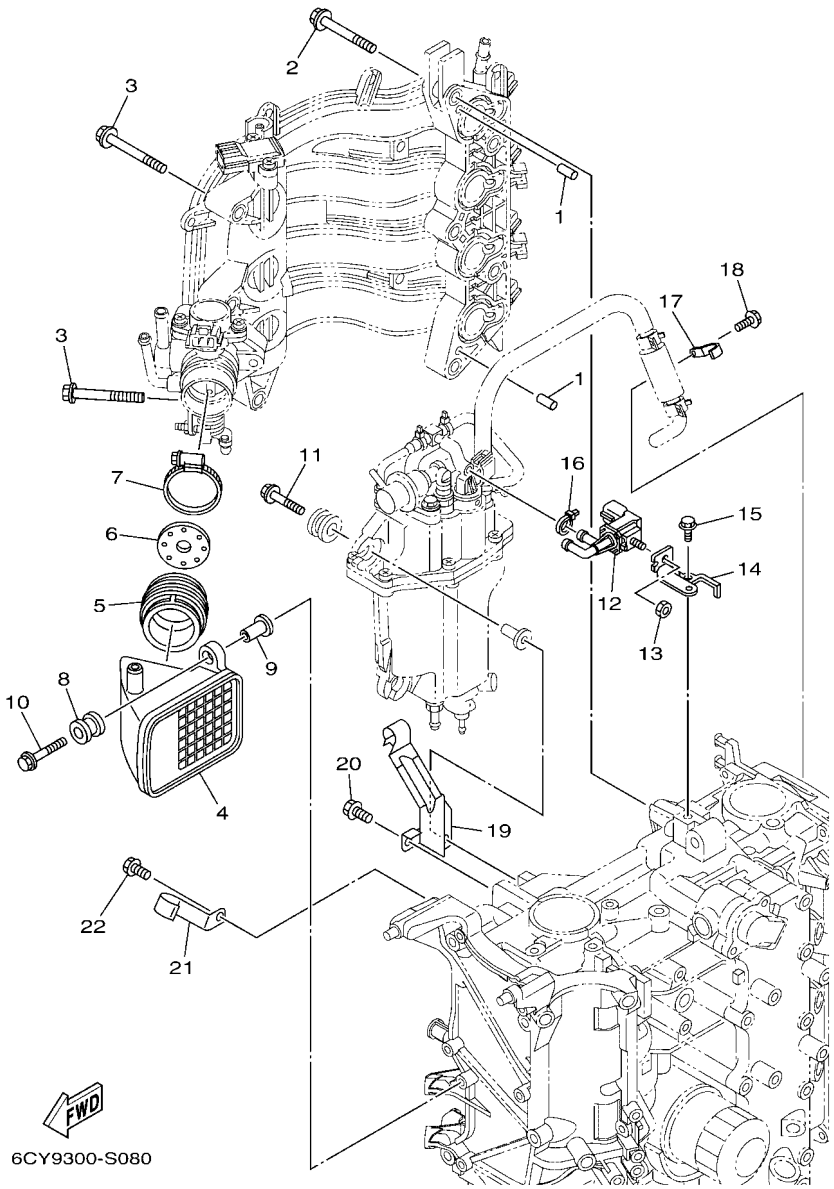

FIG. 9 INTAKE 2 — ADMISSION 2

REF. NO.	PART NO. N° PIECES	DESCRIPTION DESCRIPTION	ET	ET1				REMARKS REMARQUES
1	93608–12M05	PIN, DOWEL AXE	2	2				
2	90119–08190	BOLT, WITH WASHER BOULON, AVEC RONDELLE	5	5				
3	90119–06304	BOLT, WITH WASHER BOULON, AVEC RONDELLE	5	5				
4	6C5–14440–10	SILENCER ASSY, INTAKE SIENCIEUX D'ADMISSION	1	1				
5	6C1–14453–02	JOINT, AIR CLEANER 1 RACCORD, FILTRE A AIR 1	1	1				
6	6CY–14477–00	PLATE PLAQUE	1	1				
7	90450–50001	HOSE CLAMP ASSY BRIDE, DE DURITE	1	1				
8	6A0–82317–01	DAMPER, IGNITION COIL AMORTISSEUR, BOBINE D'ALLUM	2	2				
9	90387–06119	COLLAR COLLERETTE	2	2				
10	90119–06297	BOLT, WITH WASHER BOULON, AVEC RONDELLE	2	2				
11	90119–06291	BOLT, WITH WASHER BOULON, AVEC RONDELLE	3	3				
12	6C5–86120–00	SOLENOID VALVE ASSY SOLENOIDE	1	1				
13	95380–06600	NUT, HEXAGON ECROU	1	1				
14	6BG–86112–10	STAY, SOLENOID SUPPORT, SOLENOIDE	1	1				
15	97E95–06516	BOLT, HEXAGON W/W DEEP RECESS VIS HEXAGONAL AVC RONDELLE	1	1				
16	90465–11M10	CLAMP BRIDE	1	1				
17	6CJ–13428–00	BRACKET, STRAINER 1 SUPPORT, FILTRE 1	1	1				
18	97E95–06516	BOLT, HEXAGON W/W DEEP RECESS VIS HEXAGONAL AVC RONDELLE	1	1				
19	6C5–15378–00	HOLDER SUPPORT	1	1				
20	97E95–06514	BOLT, HEXAGON W/W DEEP RECESS VIS HEXAGONAL AVC RONDELLE	1	1				
21	6C5–15378–11	HOLDER SUPPORT	1	1				
22	97E95–06516	BOLT, HEXAGON W/W DEEP RECESS VIS HEXAGONAL AVC RONDELLE	1	1				

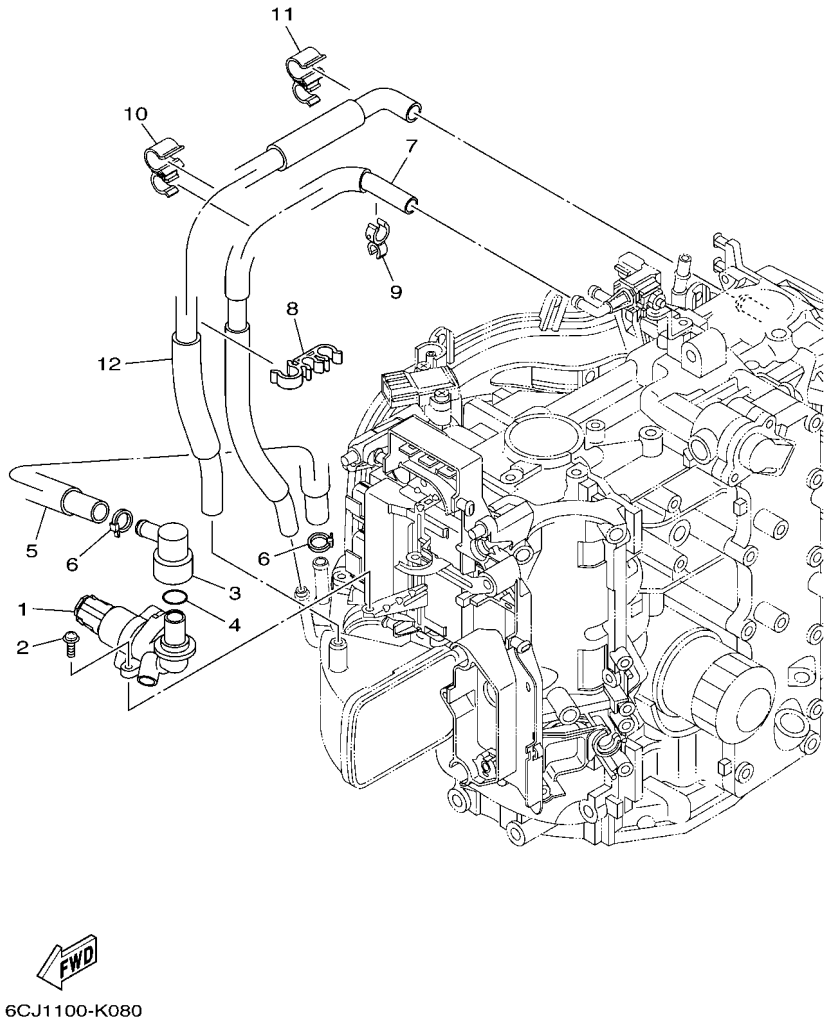

FIG. 10 INTAKE 3 — ADMISSION 3

REF. NO.	PART NO. N° PIECES	DESCRIPTION DESCRIPTION	ET	ET1				REMARKS REMARQUES
1	6C5–13713–02	VALVE, IDLE SPEED CONTROL SOUPAPE, AJUSTEMENT DE VITESSE	1	1				
2	97980–05214	SCREW, WITH WASHER VIS, AVEC RONDELLE	2	2				
3	6CJ–11372–00	NIPPLE, HOSE RACCORD, TUYAU	1	1				
4	93210–33003	O-RING JOINT TORIQUE	1	1				
5	6CJ–13543–00	HOSE, AIR DURITE, A AIR	1	1				
6	90465–11M10	CLAMP BRIDE	2	2				
7	6CJ–12576–00	HOSE 1 TUYAU 1	1	1				
8	90464–15008	CLAMP BRIDE	1	1				
9	90464–12006	CLAMP BRIDE	1	1				
10	90464–15007	CLAMP BRIDE	1	1				
11	90464–15007	CLAMP BRIDE	1	1				
12	6CJ–1531A–00	HOSE, BREATHER 1 DURITE DE RENIFLARD 1	1	1				

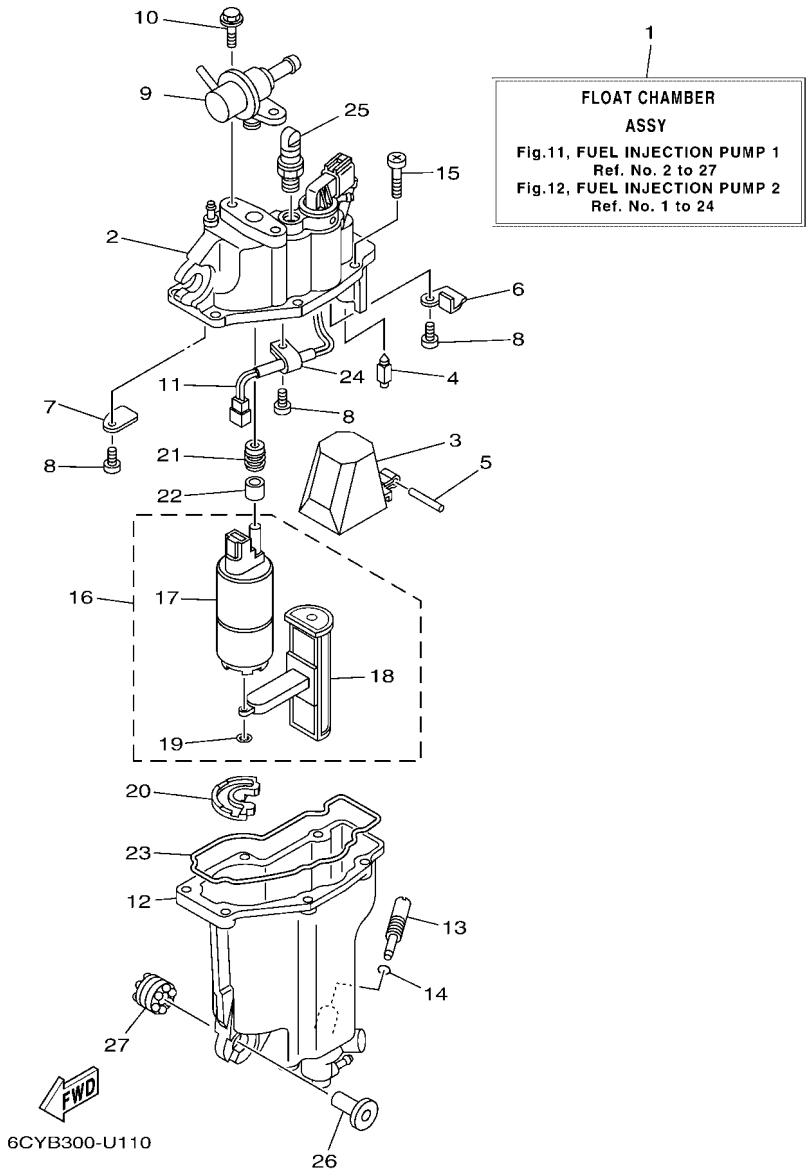

FIG. 11 FUEL INJECTION PUMP 1 POMPE A INJECTEUR 1

REF. NO.	PART NO. N° PIECES	DESCRIPTION DESCRIPTION	ET	ET1				REMARKS REMARQUES
1	6CJ–14180–04	FLOAT CHAMBER ASSY CUVE DE FLOTTEUR	1	1				
2	6C5–14182–20	COVER, FLOAT CHAMBER COUVERCLE, CUVE DE FLOTTEUR	1	1				
3	6C5–14985–00	FLOAT FLOTTEUR	1	1				
4	6C5–14546–10	VALVE, NEEDLE POINTEAU	1	1				
5	6C5–14386–00	PIN, FLOAT AXE, FLOTTEUR	1	1				
6	6C5–2441R–10	PLATE, BAFFLE 1 SEPARATEUR 1	1	1				
7	6C5–2441T–10	PLATE, BAFFLE 2 SEPARATEUR 2	1	1				
8	6C5–24453–00	SCREW VIS	3	3				
9	6C5–13906–02	REGULATOR, PRESSURE REGULATEUR DE PRESSION	1	1				
10	6C5–24592–00	BOLT BOLTE	2	2				
11	6C5–87226–00	WIRE HARNESS ASSY ENS. FAISCEAU ELECTRIQUE	1	1				
12	6C5–14960–20	BODY ASSY CARTER (ENS.)	1	1				
13	6C5–14191–00	PLUG, DRAIN PLOT, VIDANGE	1	1				
14	6C5–14397–00	O-RING JOINT TORIQUE	1	1				
15	6C5–14567–00	SCREW VIS	6	6				
16	6C5–13910–10	FUEL PUMP ASSY POMPE A ESSENCE COMPLET	1	1				
17	6C5–13907–00	.FUEL PUMP COMP. .POMPE A CARBURANT COMP.	1	1				
18	6C5–13915–00	.FILTER .FILTRE	1	1				
19	6C5–14127–10	.CLIP .JONC	1	1				
20	6C5–13593–01	DAMPER AMORTISSEUR	1	1				
21	6C5–13781–00	DAMPER, PUMP AMORTISSEUR, POMPE	1	1				
22	6C5–13716–00	COLLAR COLLERETTE	1	1				
23	6C5–14984–10	GASKET, FLOAT CHAMBER JOINT, CUVE DE FLOTTEUR	1	1				
24	6C5–21337–10	CLAMP, CABLE COLLIER, CABLE	1	1				
25	6C5–14225–00	CAP COUVERCLE	1	1				
26	90387–06M03	COLLAR COLLERETTE	3	3				
27	69L–85516–01	SPACER ENTRETOISE	3	3				

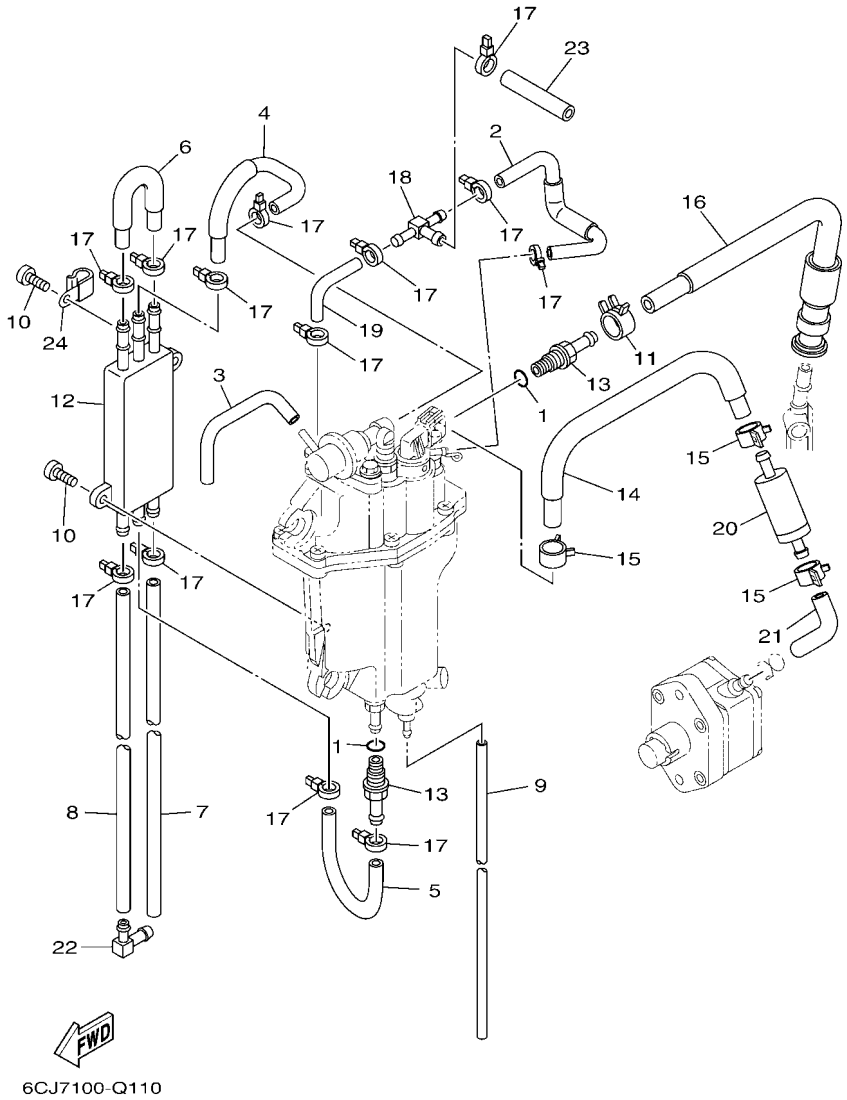

FIG. 12 FUEL INJECTION PUMP 2 — POMPE A INJECTEUR 2

REF. NO.	PART NO. N° PIECES	DESCRIPTION DESCRIPTION	ET	ET1				REMARKS REMARQUES
1	6C5–13739–00	O-RING JOINT TORIQUE	2	2				
2	6CJ–13546–00	HOSE 2 DURITE 2	1	1				
3	6C5–13542–00	HOSE, VACUUM SENSING 1 DURITE, SOUS VIDE DETECTION 1	1	1				
4	6CJ–24321–00	PIPE 10 DURITE 10	1	1				
5	6C5–24322–00	PIPE 11 DURITE 11	1	1				
6	6CJ–24323–00	PIPE 12 DURITE 12	1	1				
7	6CJ–24324–00	PIPE 13 DURITE 13	1	1				
8	6CJ–24325–00	PIPE 14 DURITE 14	1	1				
9	6BG–14149–00	PIPE DURITE	1	1				
10	6C5–24444–00	SCREW VIS	2	2				
11	6C5–13577–00	CLIP AGRAFE	1	1				
12	6C5–21841–01	COOLER RADIATEUR	1	1				
13	6C5–14251–00	NIPPLE RACCORD	2	2				
14	6C5–14148–00	PIPE DURITE	1	1				
15	6BG–24387–00	CLIP SANDOW	3	3				
16	6CJ–13974–10	PIPE, FUEL 4 TUBE 4, CARBURANT	1	1				
17	90465–11M10	CLAMP BRIDE	13	13				
18	6C5–24379–00	PIPE, JOINT 4 DURITE RACCORDEMENT 4	1	1				
19	6BG–13545–00	HOSE 1 DURITE 1	1	1				
20	6C5–24251–01	STRAINER 1 FILTRE 1	1	1				
21	6CJ–2451B–00	HOSE, FUEL INLET DURITE	1	1				
22	6C5–1410F–00	NIPPLE, 1 RACCORD, 1	1	1				
23	6C5–13547–00	HOSE 3 DURITE 3	1	1				
24	90465–08M83	CLAMP BRIDE	1	1				

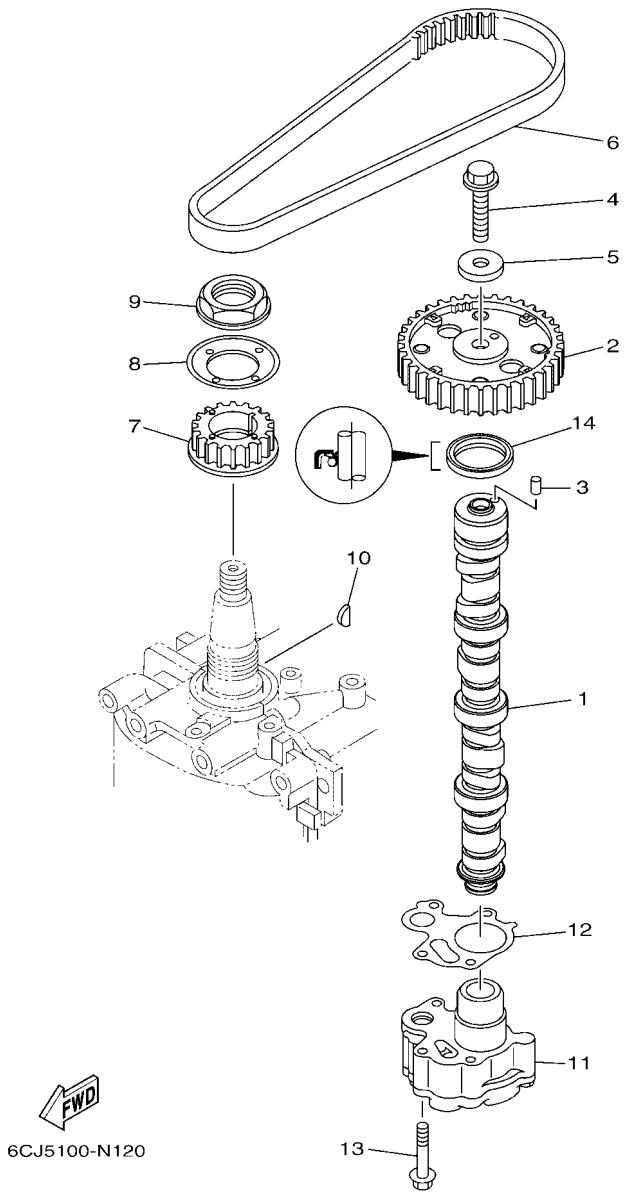

FIG. 13 OIL PUMP — POMPE A HUILE

REF. NO.	PART NO. N° PIECES	DESCRIPTION DESCRIPTION	ET	ET1				REMARKS REMARQUES
1	6CJ–12171–01	CAMSHAFT 1 ARBRE A CAMES 1	1	1				
2	6C5–11537–10	GEAR, DRIVEN PIGNON SECONDAIRE	1	1				
3	93605–17002	PIN, DOWEL AXE	1	1				
4	95817–10035	BOLT, FLANGE BOULON, A COLLERETTE	1	1				
5	90201–10144	WASHER, PLATE RONDELLE, PLATE	1	1				
6	6C5–46241–00	BELT COURROIE TRAPEZOIDALE	1	1				
7	6C5–11536–00	GEAR, DRIVE ENGRENAGE, MENANT	1	1				
8	62Y–11557–00	WASHER 1 RONDELLE 1	1	1				
9	90179–35001	NUT ECROU	1	1				
10	90280–03017	KEY, WOODRUFF CLAVETTE, DEMI-LUNE	1	1				
11	6CJ–13300–00	OIL PUMP ASSY POMPE A HUILE COMPLETE	1	1				
12	6C5–13329–00	GASKET, PUMP COVER JOINT, COUVERCLE DE POMPE	1	1				
13	90119–06025	BOLT, WITH WASHER BOULON, AVEC RONDELLE	4	4				
14	93102–37M40	OIL SEAL JOINT SPY	1	1				

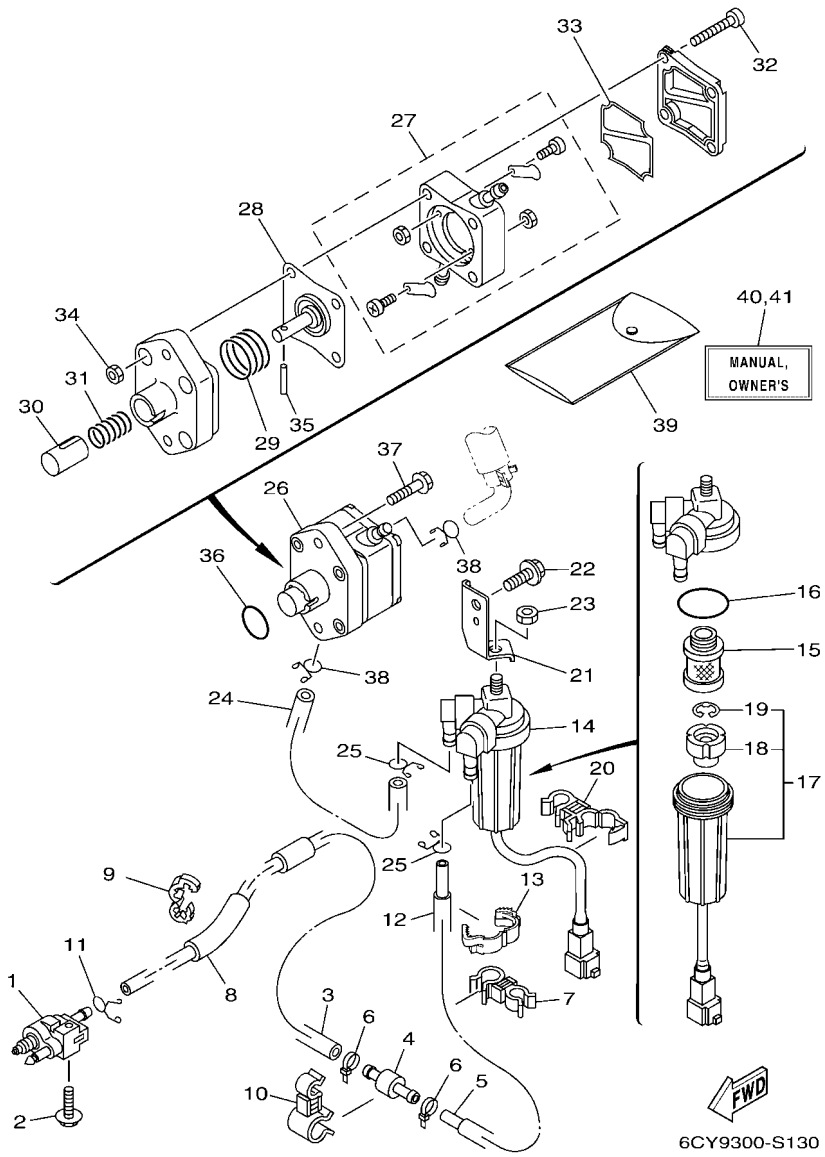

FIG. 14 FUEL — CARBURANT

REF. NO.	PART NO. N° PIECES	DESCRIPTION DESCRIPTION	ET	ET1				REMARKS REMARQUES
1	6G1–24304–10	FUEL PIPE JOINT COMP. 1 DURITE RACCORDEMT. A ESSENCE	1	1				
2	97E95–06525	BOLT, HEXAGON W/W DEEP RECESS VIS HEXAGONAL AVC RONDELLE	1	1				
3	6BG–24313–00	PIPE 3 DURITE 3	1	1				
4	67F–24377–00	PIPE, JOINT 2 DURITE RACCORDEMENT 2	1	1				
5	90445–133F0	HOSE (L195) DURITE (L195)	1	1				
6	90465–11M10	CLAMP BRIDE	2	2				
7	90464–12004	CLAMP BRIDE	1	1				
8	90446–13M11	HOSE (L65) DURITE (L65)	1	1				
9	90464–13227	CLAMP BRIDE	1	1				
10	90464–16017	CLAMP BRIDE	1	1				
11	90467–09M17	CLIP JONC	1	1				
12	90446–15006	HOSE (L150) DURITE (L150)	1	1				
13	90464–14010	CLAMP BRIDE	1	1				
14	6D8–24560–01	FILTER ASSY ENS FILTRE	1	1				
15	6D8–24563–00	.ELEMENT, FILTER .ELEMENT, FILTRE	1	1				
16	6D8–24564–00	.GASKET .JOINT	1	1				
17	6D8–24562–00	.CUP, FILTER .CUVETTE, FILTRE	1	1				
18	6D8–24469–00	..FLOAT, WATER LEVEL ..FLOTTEUR	1	1				
19	6D8–24519–00	..CLIP ..JONC	1	1				
20	90464–12012	CLAMP BRIDE	1	1				
21	6CJ–24566–00	BRACKET, FILTER SUPPORT, FILTRE	1	1				
22	95D95–08016	BOLT, FLANGE DEEP RECESS BOULON FIXATION	1	1				
23	95380–08600	NUT ECROU	1	1				
24	6BG–24311–00	PIPE, FUEL 1 DURITE A ESSENCE	1	1				
25	90467–11M08	CLIP JONC	2	2				
26	6CJ–24410–01	FUEL PUMP ASSY POMPE A ESSENCE	1	1				
27	6CJ–24415–00	.BODY 4 .CORPS 4	1	1				

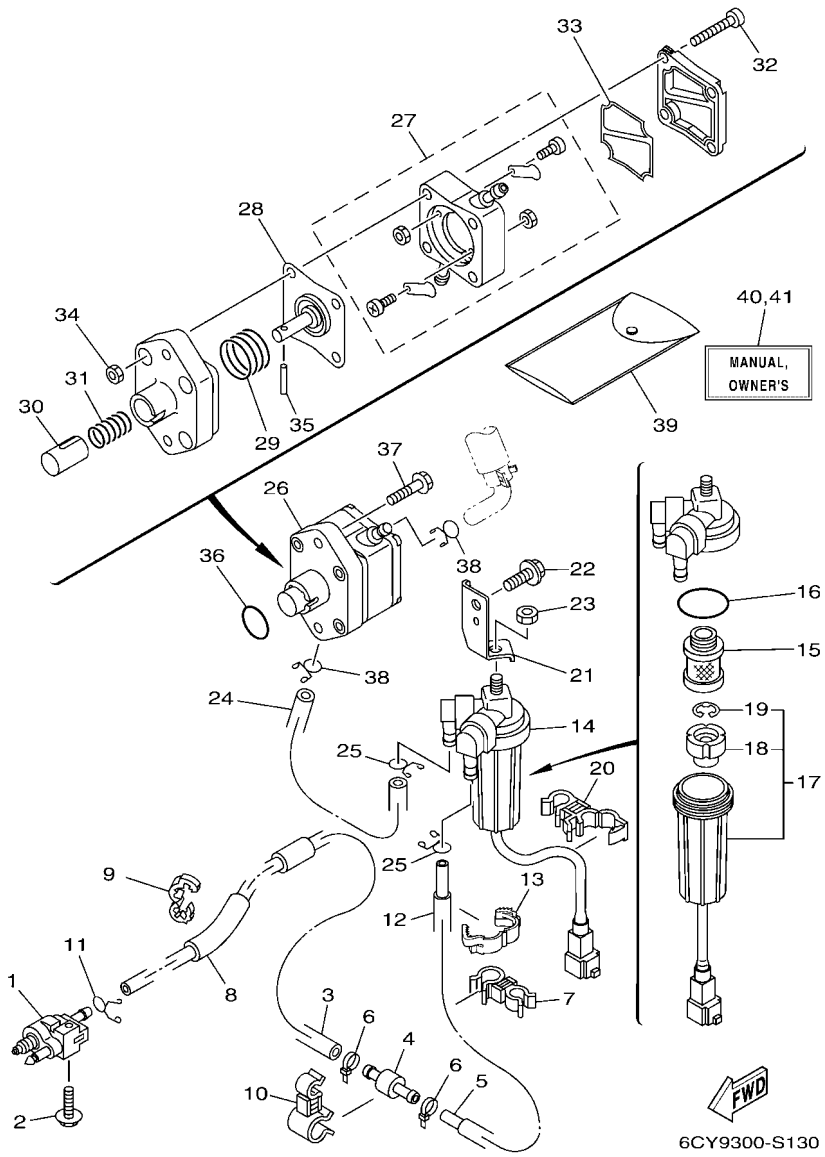

FIG. 14 FUEL — CARBURANT

REF. NO.	PART NO. N° PIECES	DESCRIPTION DESCRIPTION	ET	ET1				REMARKS REMARQUES
28	62Y–24411–03	.DIAPHRAGM .DIAPHRAGME	1	1				
29	62Y–24423–00	.SPRING, DIAPHRAGM .RESSORT, DIAPHRAGME	1	1				
30	6CJ–13131–00	.PLUNGER .PLONGEUR	1	1				
31	6CJ–24454–00	.SPRING .RESSORT	1	1				
32	62Y–24444–01	.SCREW .VIS	4	4				
33	6C5–24471–01	.DIAPHRAGM .DIAPHRAGME	1	1				
34	95380–05600	.NUT .ECROU	4	4				
35	6CJ–24374–00	.PIN .GOUPILLE	1	1				
36	93210–24M79	O-RING JOINT TORIQUE	1	1				
37	97E95–06530	BOLT, HEXAGON W/W DEEP RECESS VIS HEXAGONAL AVC RONDELLE	2	2				
38	90467–10M04	CLIP JONC	2	2				
39	6CJ–28100–01	TOOL KIT TROUSSE A OUTILS	1	1				AP AP
40	6C1–28199–7L–E0	MANUAL,OWNER'S MANUEL D'UTILISATION	1	1				UR (E) UR (E)
	6C1–28199–7L–F0	MANUAL,OWNER'S MANUEL D'UTILISATION	1	1				UR (F) UR (F)
	6C1–28199–7L–S0	MANUAL,OWNER'S MANUEL D'UTILISATION	1	1				UR (ES) UR (ES)
	6C1–28199–7L–G0	MANUAL,OWNER'S MANUEL D'UTILISATION	1	1				UR (D) UR (D)
	6C1–28199–7L–D0	MANUAL,OWNER'S MANUEL D'UTILISATION	1	1				UR (NL) UR (NL)
	6C1–28199–7L–H0	MANUAL,OWNER'S MANUEL D'UTILISATION	1	1				UR (I) UR (I)
41	6C1–28199–8L–K0	MANUAL,OWNER'S MANUEL D'UTILISATION	1	1				UR (DK) UR (DK)
	6C1–28199–8L–R0	MANUAL,OWNER'S MANUEL D'UTILISATION	1	1				UR (GR) UR (GR)
	6C1–28199–8L–P0	MANUAL,OWNER'S MANUEL D'UTILISATION	1	1				UR (P) UR (P)
	6C1–28199–8L–N0	MANUAL,OWNER'S MANUEL D'UTILISATION	1	1				UR (N) UR (N)
	6C1–28199–8L–M0	MANUAL,OWNER'S MANUEL D'UTILISATION	1	1				UR (S) UR (S)
	6C1–28199–8L–L0	MANUAL,OWNER'S MANUEL D'UTILISATION	1	1				UR (SF) UR (SF)

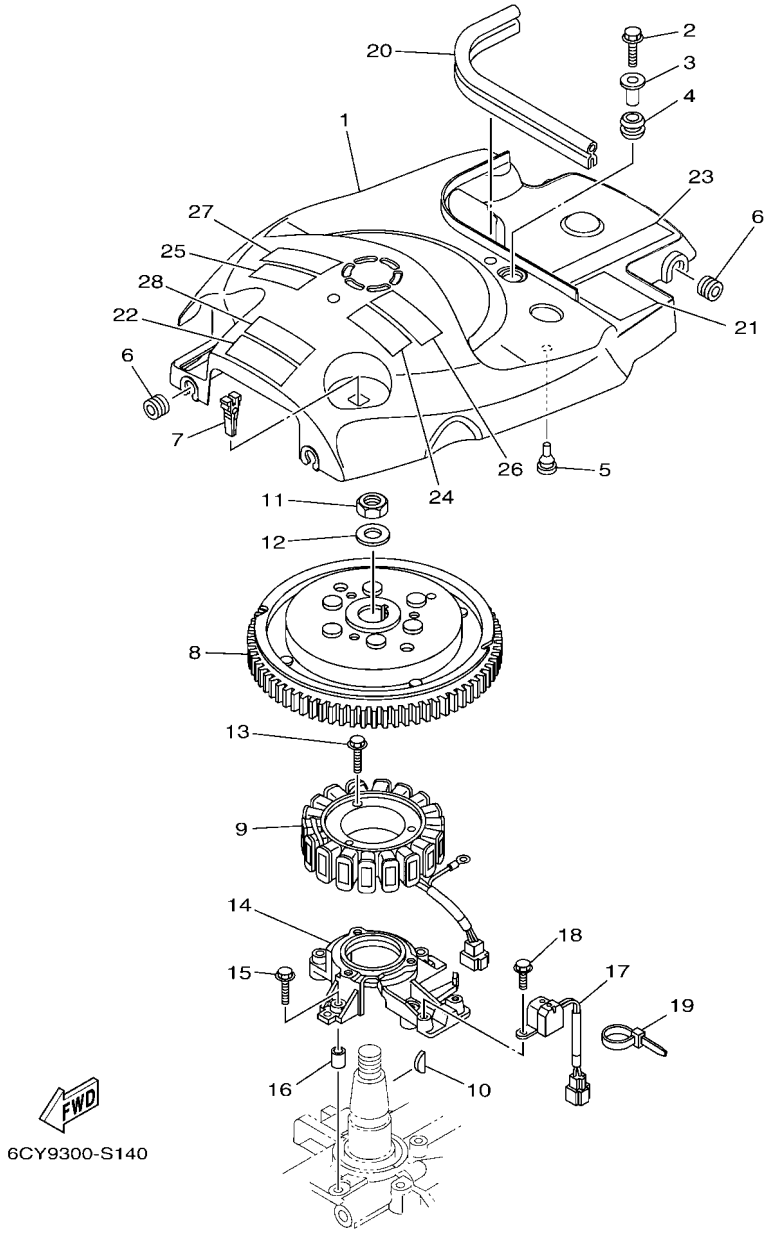

FIG. 15 GENERATOR — GENERATRICE

REF. NO.	PART NO. N° PIECES	DESCRIPTION DESCRIPTION	ET	ET1				REMARKS REMARQUES
1	6CJ–81337–11	COVER, FLYWHEEL COUVERCLE, VOLANT	1	1				
2	95D95–06020	BOLT, FLANGE DEEP RECESS BOULON FIXATION	1	1				
3	90387–06285	COLLAR COLLERETTE	1	1				
4	90480–15M31	GROMMET PASSE-FIL	1	1				
5	90480–06M19	GROMMET PASSE-FIL	1	1				
6	90480–12314	GROMMET PASSE-FIL	4	4				
7	67F–2812A–00	PULLER, FUSE TENDEUR, FUSIBLE	1	1				
8	6C5–81450–00	ROTOR ASSY ROTOR COMPLET	1	1				
9	6C5–81410–01	STATOR ASSY STATOR COMPLET	1	1				
10	6H4–11545–00	KEY, WOODRUFF CLAVETTE, DEMI-LUNE	1	1				
11	90170–20137	NUT ECROU	1	1				
12	90201–21M18	WASHER, PLATE RONDELLE, PLATE	1	1				
13	95023–06030	BOLT BOULON, A COLLERETTE	3	3				
14	6C5–85561–00	BASE, MAGNETO BASE, MAGNETO	1	1				
15	95023–06030	BOLT BOULON, A COLLERETTE	4	4				
16	99530–08012	PIN, DOWEL GOUJON, D'ASSEMBLAGE	2	2				
17	62Y–85580–00	COIL, PULSER BOBINE, PULSEUR	1	1				
18	97595–05512	BOLT, WITH WASHER VIS HEXAGONAL AVC RONDELLE	2	2				
19	90465–13M97	CLAMP BRIDE	1	1				
20	6BG–42617–00	DAMPER, FORM BOURRELET, CAOUTCHOUC	1	1				
21	62Y–83626–00	MARK 6 MARK 6	1	1				
22	6CJ–81919–01	GRAPHIC, REGULATOR ADHESIF, REGULATEUR	1	1				
23	6C5–13437–64	MARK, CAUTION MAKER	1	1				
24	6EE–81995–40	LABEL, WARNING ETIQUETTE, AVERTISSEMENT	1	1				
25	6EE–81995–50	LABEL, WARNING ETIQUETTE, AVERTISSEMENT	1	1				
26	6EE–81994–40	LABEL, SAFETY ETIQUETTE, SECURITE	1	1				
27	6EE–81994–50	LABEL, SAFETY ETIQUETTE, SECURITE	1	1				

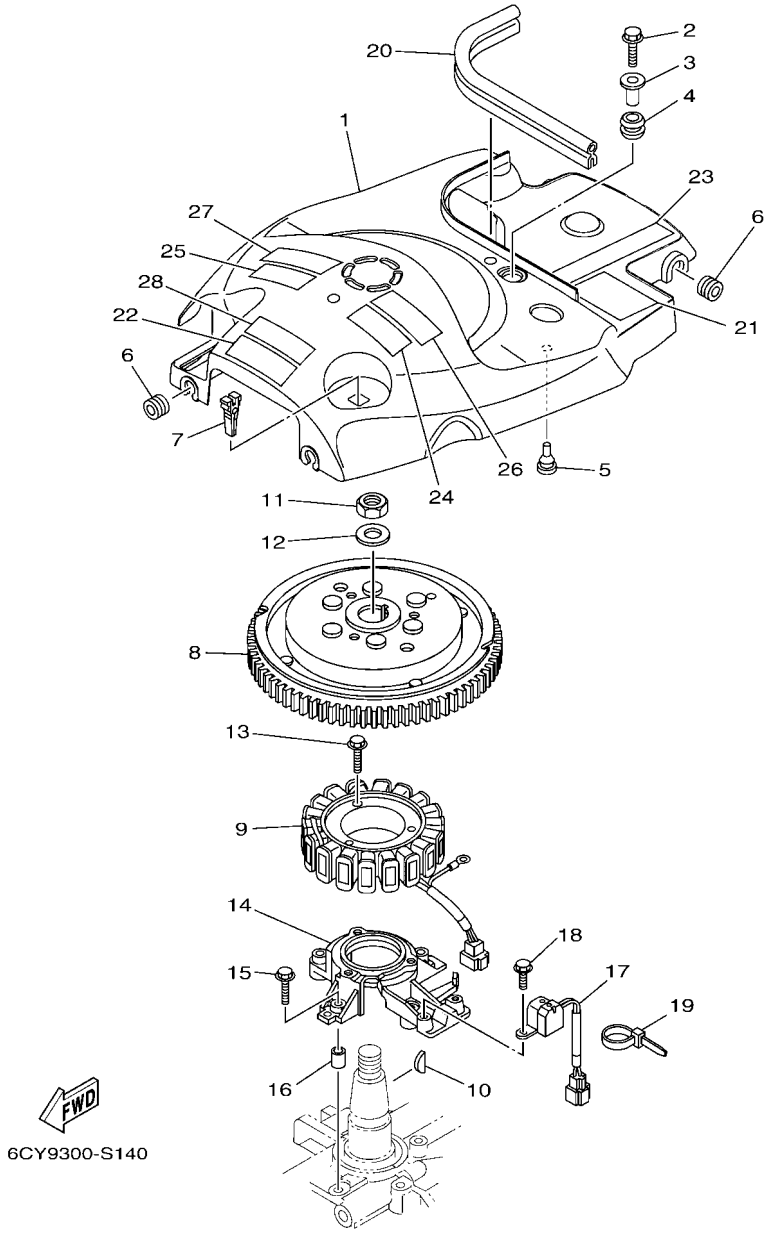

FIG. 15 GENERATOR — GENERATRICE

REF. NO.	PART NO. N° PIECES	DESCRIPTION DESCRIPTION	ET	ET1				REMARKS REMARQUES
28	6AG–81996–00	MARK MARQUE	1	1				

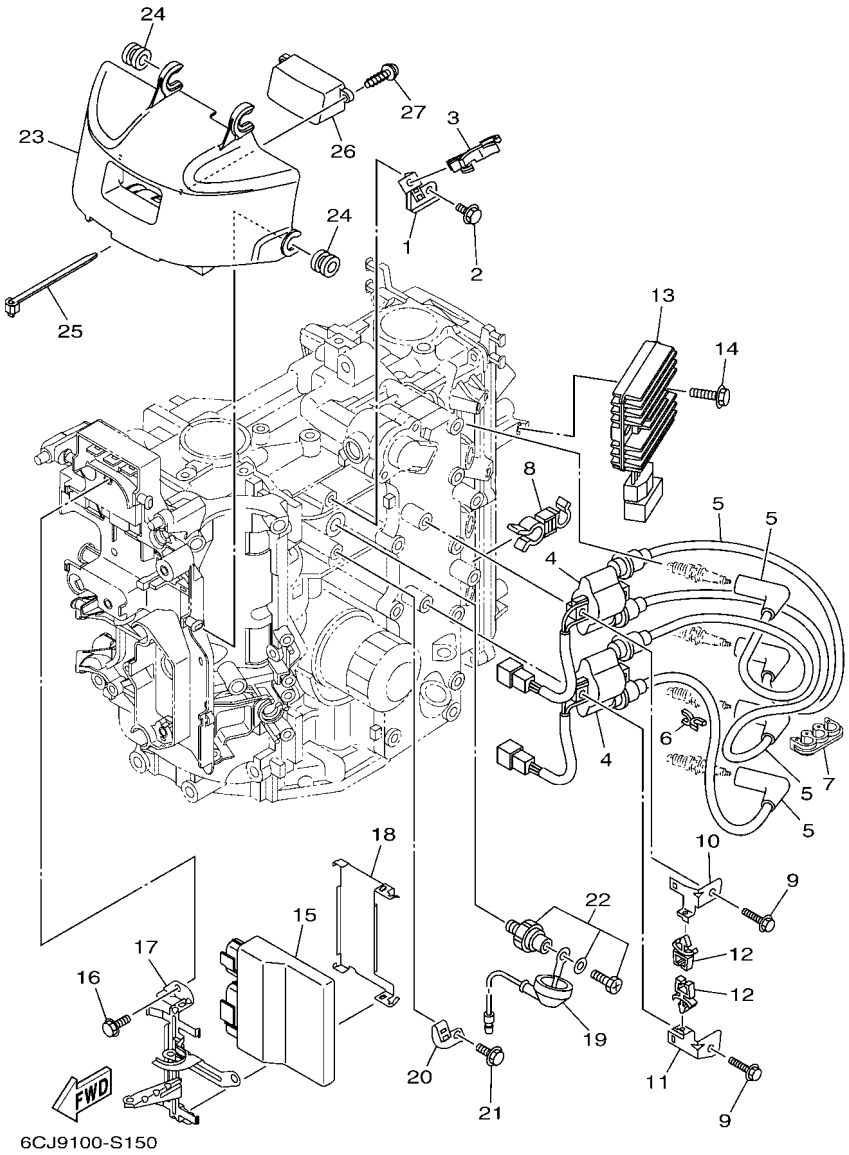

FIG. 16 ELECTRICAL 1 — PARTIE ELECTRIQUE 1

REF. NO.	PART NO. N° PIECES	DESCRIPTION DESCRIPTION	ET	ET1				REMARKS REMARQUES
1	6C5–85525–00	PLATE PLAQUE	1	1				
2	97E95–06514	BOLT, HEXAGON W/W DEEP RECESS VIS HEXAGONAL AVC RONDELLE	1	1				
3	90464–18246	CLAMP BRIDE	1	1				
4	63P–82310–01	IGNITION COIL ASSY BOBINE D'ALLUMAGE	2	2				
5	6CJ–82340–00	HIGH TENSION CORD ASSY 1 CABLE HAUTE TENSION 1	4	4				
6	90464–07M41	CLAMP BRIDE	1	1				
7	90464–07M05	CLAMP BRIDE	1	1				
8	90464–13013	CLAMP BRIDE	1	1				
9	97E95–06525	BOLT, HEXAGON W/W DEEP RECESS VIS HEXAGONAL AVC RONDELLE	4	4				
10	6C5–82316–01	BRACKET, IGNITION COIL SUPPORT, BOBINE D'ALLUMAGE	1	1				
11	6C5–82316–11	BRACKET, IGNITION COIL SUPPORT, BOBINE D'ALLUMAGE	1	1				
12	90464–06001	CLAMP BRIDE	2	2				
13	68V–81960–10	RECTIFIER & REGULATOR ASSY REDRESSEUR REGULATEUR CPLT	1	1				
14	97E95–06525	BOLT, HEXAGON W/W DEEP RECESS VIS HEXAGONAL AVC RONDELLE	2	2				
15	6CJ–8591A–12	ENGINE CONTROL UNIT ASSY BLOC DE CONTROL	1	1				
16	97E95–06516	BOLT, HEXAGON W/W DEEP RECESS VIS HEXAGONAL AVC RONDELLE	3	3				
17	6CJ–82588–00	PLATE PLAQUE	1	1				
18	6CJ–8253B–00	PLATE, LOCK PLAQUE BUTEE	1	1				
19	68V–81315–01	LEAD WIRE ASSY FIL	1	1				
20	6C5–82388–10	PLATE PLAQUETTE	1	1				
21	97E95–06514	BOLT, HEXAGON W/W DEEP RECESS VIS HEXAGONAL AVC RONDELLE	1	1				
22	64J–82504–00	OIL PRESSURE SWITCH ASSY CONTACTEUR DE PRESSION D'HUILE	1	1				
23	6CJ–81942–00	COVER COUVERCLE	1	1				
24	90480–12314	GROMMET PASSE-FIL	4	4				
25	90465–13M24	CLAMP BRIDE	1	1				
26	6CJ–83559–00	COVER, METER COUVERCLE, COMPTEUR	1	1				
27	90167–05009	SCREW, TAPPING VIS, TETE FRAISEE	2	2				

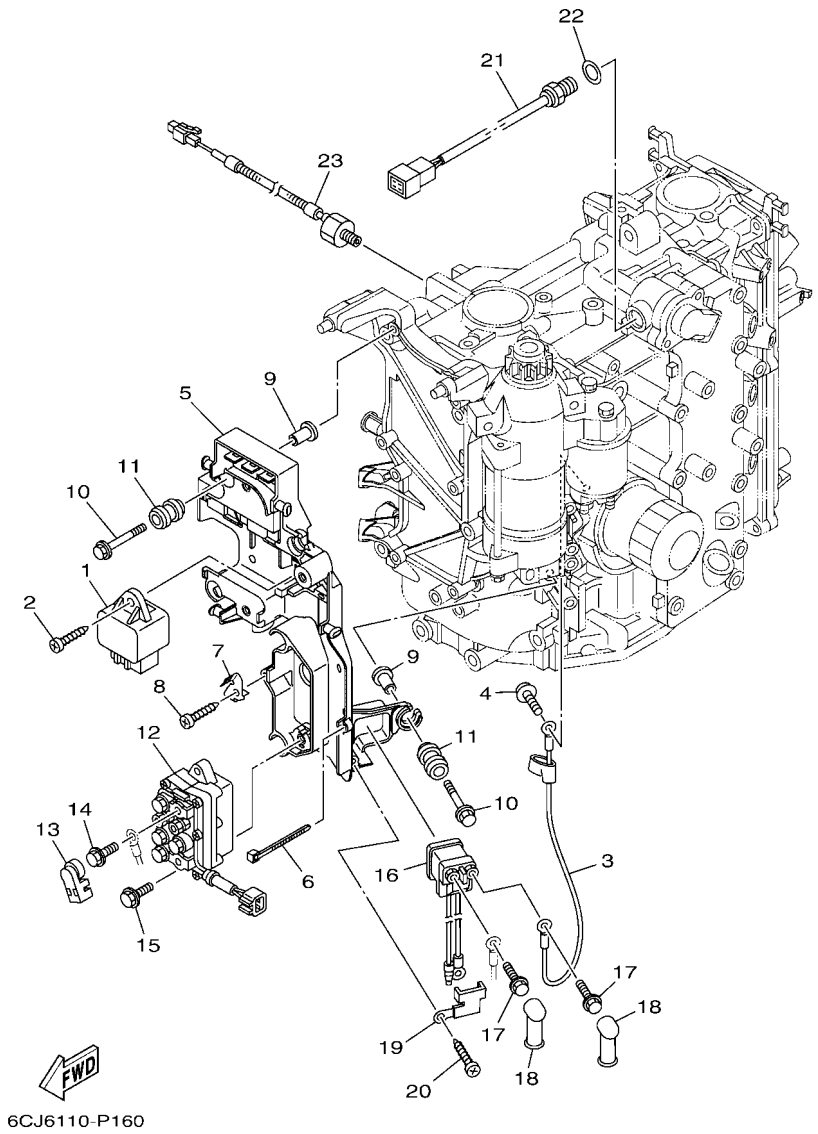

FIG. 17 ELECTRICAL 2 — PARTIE ELECTRIQUE 2

REF. NO.	PART NO. N° PIECES	DESCRIPTION DESCRIPTION	ET	ET1				REMARKS REMARQUES
1	60E–81950–00	RELAY ASSY RELAIS COMPLET	1	1				
2	97780–60620	SCREW, TAPPING VIS, TETE BOMBEE	1	1				
3	6C5–81815–00	CORD, STARTER MOTOR FIL, DEMARREUR ELECTRIQUE	1	1				
4	90159–04005	SCREW, WITH WASHER VIS, AVEC RONDELLE	1	1				
5	6CJ–81948–01	BRACKET SUPPORT	1	1				
6	90465–13M97	CLAMP BRIDE	4	4				
7	6CJ–85548–00	HOLDER SUPPORT	1	1				
8	97780–60620	SCREW, TAPPING VIS, TETE BOMBEE	1	1				
9	90387–06119	COLLAR COLLERETTE	6	6				
10	90119–06289	BOLT, WITH WASHER BOULON, AVEC RONDELLE	6	6				
11	6A0–82317–01	DAMPER, IGNITION COIL AMORTISSEUR, BOBINE D'ALLUM	6	6				
12	63P–81950–00	RELAY ASSY RELAIS COMPLET	1	1				
13	6P2–8183X–00	CAP, TERMINAL COUVERCLE, BORNE	2	2				
14	97E95–06610	BOLT, HEXAGON W/W DEEP RECESS VIS HEXAGONAL AVC RONDELLE	2	2				
15	97E95–06520	BOLT, HEXAGON W/W DEEP RECESS VIS HEXAGONAL AVC RONDELLE	2	2				
16	68V–8194A–00	RELAY RELAIS	1	1				
17	97E95–06610	BOLT, HEXAGON W/W DEEP RECESS VIS HEXAGONAL AVC RONDELLE	2	2				
18	6G5–82119–00	COVER, LEAD WIRE GARNITURE, FIL	2	2				
19	68F–81953–00	STAY, RELAY SUPPORT, RELAIS	1	1				
20	97780–60620	SCREW, TAPPING VIS, TETE BOMBEE	1	1				
21	6CJ–85790–00	THERMOSENSOR ASSY SENSITOMETRE	1	1				
22	90430–14115	GASKET JOINT	1	1				
23	6CJ–85780–01	SENSOR, KNOCK SONDE DE COGNEMENT	1	1				

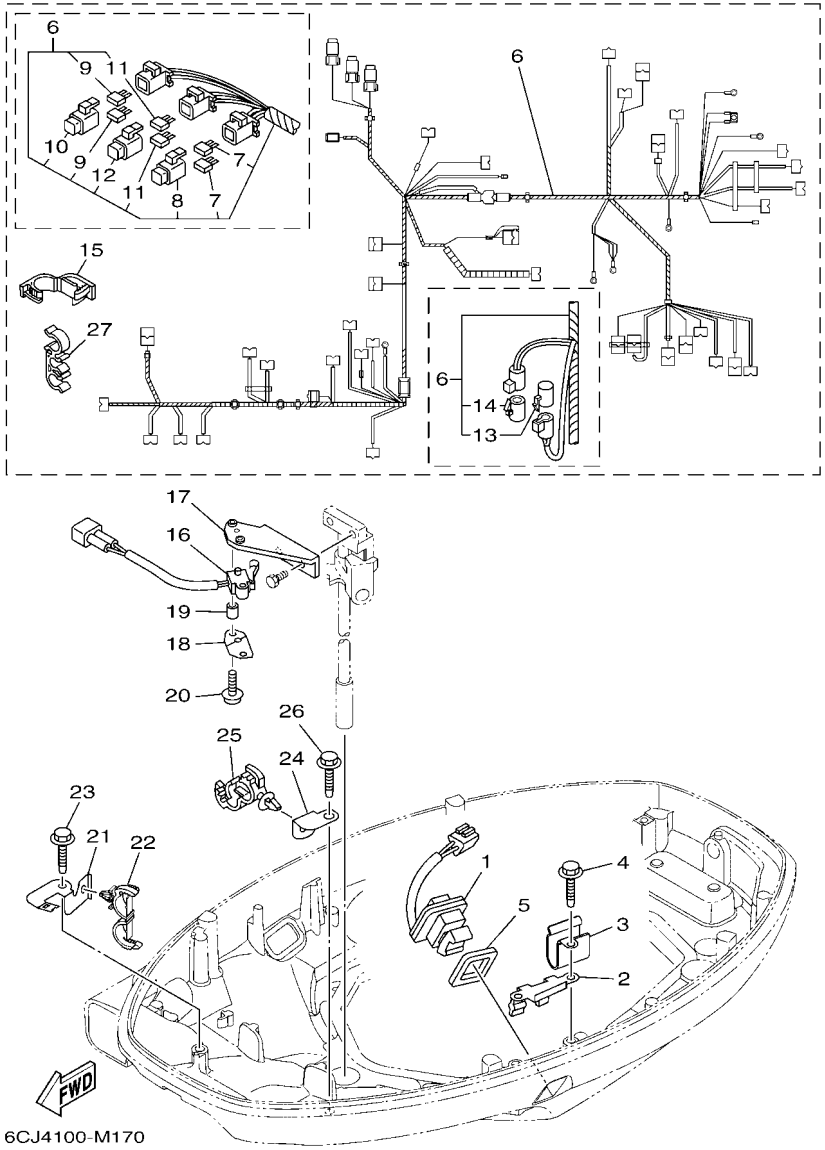

FIG. 18 ELECTRICAL 3 — PARTIE ELECTRIQUE 3

REF. NO.	PART NO. N° PIECES	DESCRIPTION DESCRIPTION	ET	ET1				REMARKS REMARQUES
1	69J–82563–01	TRIM & TILT SWITCH ASSY INCLINER ET PARER COMMUTATEUR	1	1				
2	6BG–83614–00	BRACKET SUPPORT	1	1				
3	90465–08M89	CLAMP BRIDE	1	1				
4	90109–06M86	BOLT BOULON	2	2				
5	69J–82587–01	GASKET JOINT	1	1				
6	6CJ–82590–13	WIRE HARNESS ASSY FAISCEAU DE FILS COMPLET	1	1				FOR TILT LIMIT FOR TILT LIMIT
7	67F–82151–00	.FUSE (20A) .FUSIBLE (20A)	2	2				
8	67F–8215B–10	.CAP (YELLOW) .BOUCHON (YELLOW)	1	1				
9	67F–82151–10	.FUSE (30A) .FUSIBLE (30A)	2	2				
10	67F–8215B–20	.CAP (GREEN) .BOUCHON (GREEN)	1	1				
11	5JJ–82151–10	.FUSE (15A-BL) .FUSIBLE (15A-BL)	2	2				
12	67F–8215B–00	.CAP (BLACK) .BOUCHON (NOIR)	1	1				
13	6DA–82582–00	.CAP 1 (FEMALE) .BOUCHON 1 (FEMME)	1	1				
14	6DA–82582–10	.CAP 1 (MALE) .BOUCHON 1 (MALE)	1	1				
15	90464–18004	CLAMP BRIDE	1	1				
16	60V–8259F–01	SWITCH ASSY COMMUTATEUR	1	1				
17	6CJ–82554–00	STAY, NEUTRAL SWITCH SUPPORT, CONT DE POINT-MORT	1	1				
18	61A–82588–01	PLATE PLAQUE	1	1				
19	90387–04001	COLLAR COLLERETTE	1	1				
20	97985–04116	SCREW, WITH WASHER VIS, AVEC RONDELLE	2	2				
21	6BG–42811–01	STAY SUPPORT	1	1				
22	90464–18205	CLAMP BRIDE	1	1				
23	90109–06M86	BOLT BOULON	1	1				
24	63P–42756–00	STAY, CLAMP SUPPORT, COLLIER	1	1				
25	90464–12183	CLAMP BRIDE	1	1				
26	90109–06M86	BOLT BOULON	1	1				
27	90464–15008	CLAMP BRIDE	2	2				

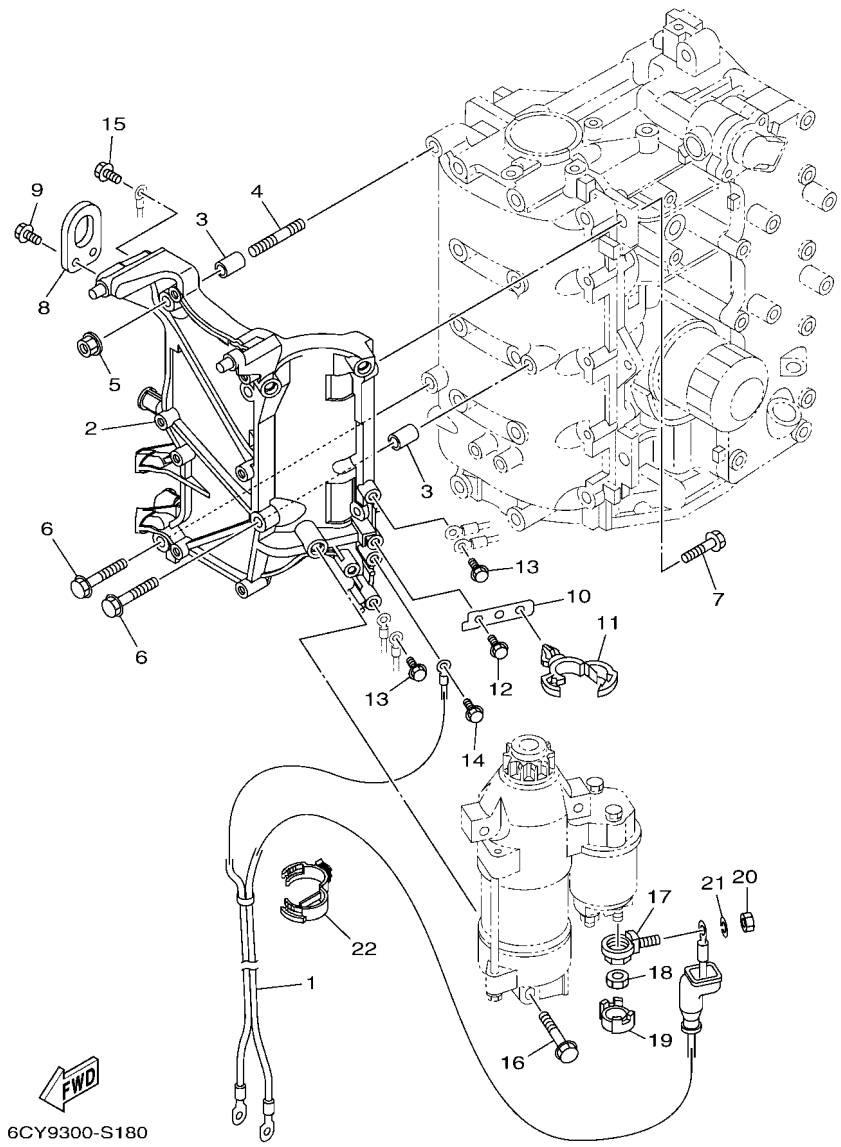

FIG. 19 ELECTRICAL 4 — PARTIE ELECTRIQUE 4

REF. NO.	PART NO. N° PIECES	DESCRIPTION DESCRIPTION	ET	ET1				REMARKS REMARQUES
1	6C5–82105–U2	BATTERY CABLE CABLE DE BATTERIE	1	1				
2	6CJ–81822–00	BRACKET, STARTING MOTOR SUPPORT, DEMARREUR ELECTRIQUE	1	1				
3	99530–10114	PIN, DOWEL GOUJON, D'ASSEMBLAGE	2	2				
4	95680–08330	BOLT, STUD GOUJON	1	1				
5	90179–08M34	NUT ECROU	1	1				
6	97E95–08535	BOLT, HEXAGON W/W DEEP RECESS VIS HEXAGONAL AVC RONDELLE	2	2				
7	97E95–08525	BOLT, HEXAGON W/W DEEP RECESS VIS HEXAGONAL AVC RONDELLE	2	2				
8	62Y–11119–00	HANGER, ENGINE ANNEAU, LEVAGE	1	1				
9	97E95–06520	BOLT, HEXAGON W/W DEEP RECESS VIS HEXAGONAL AVC RONDELLE	2	2				
10	6CJ–85525–00	PLATE PLAQUE	1	1				
11	90464–20181	CLAMP BRIDE	1	1				
12	97E95–06516	BOLT, HEXAGON W/W DEEP RECESS VIS HEXAGONAL AVC RONDELLE	1	1				
13	97E95–06516	BOLT, HEXAGON W/W DEEP RECESS VIS HEXAGONAL AVC RONDELLE	2	2				
14	97E95–06516	BOLT, HEXAGON W/W DEEP RECESS VIS HEXAGONAL AVC RONDELLE	1	1				
15	97E95–06516	BOLT, HEXAGON W/W DEEP RECESS VIS HEXAGONAL AVC RONDELLE	1	1				
16	97513–08545	BOLT, WITH WASHER VIS HEXAGONAL AVC RONDELLE	3	3				
17	60V–81925–00	TERMINAL BORNE	1	1				
18	90179–08003	NUT ECROU	1	1				
19	68F–82582–00	CAP,1 COUVERCLE 1	1	1				
20	95333–08600	NUT ECROU	1	1				
21	92903–08100	WASHER, SPRING RONDELLE, GROWER	1	1				
22	90464–30003	CLAMP BRIDE	1	1				

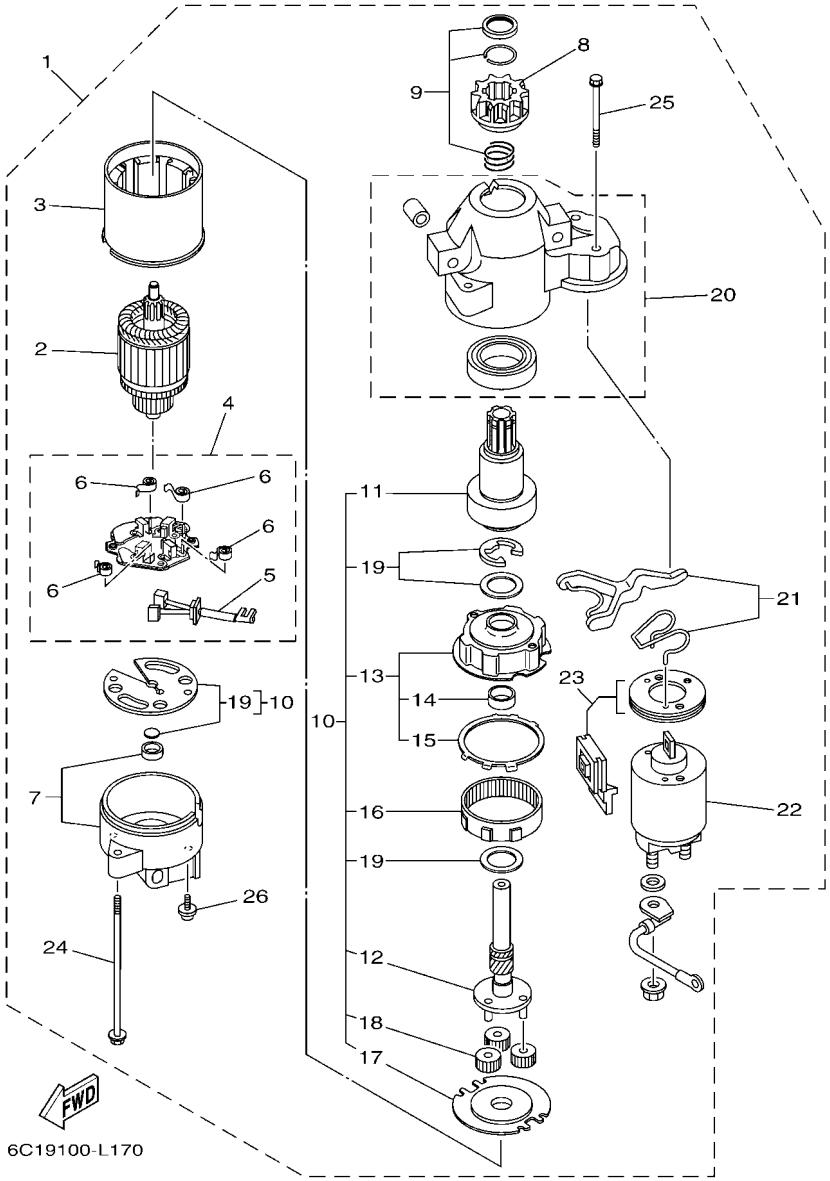

FIG. 20 STARTING MOTOR — DEMARREUR ELECTRIQUE

REF. NO.	PART NO. N° PIECES	DESCRIPTION DESCRIPTION	ET	ET1				REMARKS REMARQUES
1	6CJ–81800–01	STARTING MOTOR ASSY DEMARREUR ELECTRIQUE COMPLET	1	1				
2	67F–81850–00	.ARMATURE ASSY .INDUIT	1	1				
3	67F–81810–00	.STATOR ASSY .STATOR COMPLET	1	1				
4	69J–81840–11	.BRUSH HOLDER ASSY .SUPPORT DE CHARBON	1	1				
5	69J–81801–11	..BRUSH SET ..JEU DE BROSSE	1	1				
6	67F–81813–00	..SPRING, BRUSH ..RESSORT, DE CHARBON	4	4				
7	68F–81820–00	.REAR BRACKET ASSY .SUPPORT ARRIERE COMPLET	1	1				
8	67F–81808–00	.PINION ASSY .PIGNON	1	1				
9	67F–81857–00	.PINION STOPPER SET .BUTEE PIGNON	1	1				
10	67F–81807–00	.GEAR ASSY, STARTING MOTOR .PIGNON, DEMARREUR ELECTRIQUE	1	1				
11	67F–81832–00	..CLUTCH, OVER RUN ..EMBRAYAGE, ROUE LIBRE	1	1				
12	67F–81836–00	..SHAFT, PINION ..AXE, PIGNON	1	1				
13	67F–81821–00	..BRACKET, CENTER 1 ..SUPPORT, CENTRE 1	1	1				
14	67F–81841–00	...BEARING ...ROULEMENT	1	1				
15	67F–8183R–00	...GASKET ...JOINT	1	1				
16	67F–81891–00	..GEAR, RING ..ROUE DENTEE	1	1				WITH 67F-8183R-00 WITH 67F-8183R-00
17	67F–81830–00	..BRACKET, CENTER 2 ..SUPPORT, CENTRE 2	1	1				
18	60V–8183T–00	..GEAR, IDLER ..PIGNON, INTERMEDIAIRE	3	3				
19	67F–81809–00	..WASHER KIT ..JEU DE RONDELLES	1	1				
20	60X–81842–00	.COVER .COUVERCLE	1	1				
21	6C5–81839–00	.LEVER ASSY .LEVIER COMPLET	1	1				
22	6C5–81941–00	.STARTER RELAY ASSY .LANCEUR RELAIS (ENS.)	1	1				
23	6C5–81869–00	.COVER, DUST .COUVERCLE, POUSSIERE	1	1				
24	6K7–81826–11	.BOLT .BOULON	2	2				
25	69J–81828–00	.BOLT 2 .BOULON 2	2	2				
26	67F–81846–00	.SCREW .VIS	2	2				

FIG. 21 BOTTOM COWLING 1 — CAPOT INFERIEUR 1

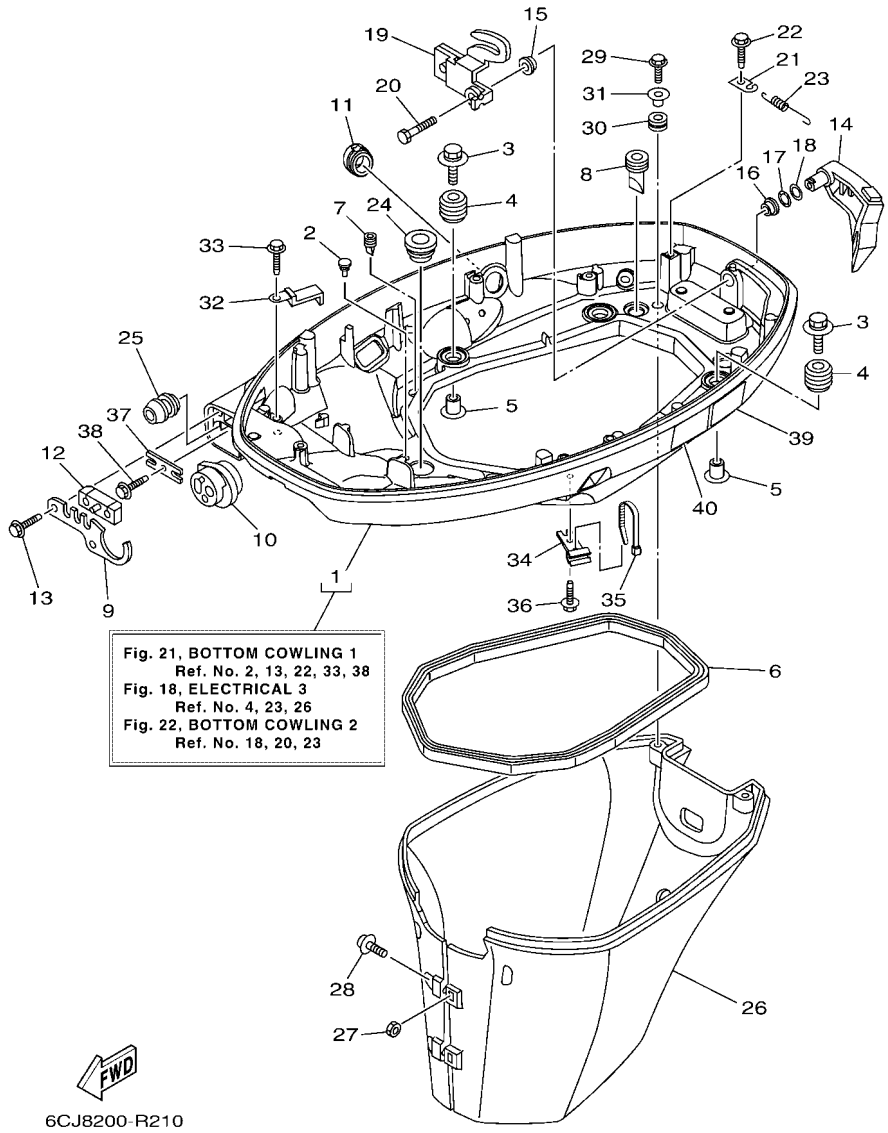

REF. NO.	PART NO. N° PIECES	DESCRIPTION DESCRIPTION	ET	ET1				REMARKS REMARQUES
1	6CJ–42710–02–8D	BOTTOM COWLING ASSY ENS. EMBASE	1	1				
2	6H4–42748–01	GROMMET PASSE-FIL	3	3				
3	90119–06291	BOLT, WITH WASHER BOULON, AVEC RONDELLE	4	4				
4	6BG–42748–01	GROMMET PASSE-FIL	4	4				
5	90387–06M69	COLLAR COLLERETTE	4	4				
6	62Y–42716–01	RUBBER SEAL 1 JOINT EN CAOUTCHOUC 1	1	1				
7	65W–42717–00	RUBBER, SEAL 2 JOINT EN CAOUTCHOUC 2	2	2				
8	61A–42717–00	RUBBER, SEAL 2 JOINT EN CAOUTCHOUC 2	2	2				
9	6BG–42761–00	STOPPER PLAQUETTE	1	1				
10	6CJ–42725–01	GROMMET PASSE-FIL	1	1				
11	6CJ–42726–10	GROMMET PASSE-FIL	1	1				
12	6BG–42727–01	GROMMET PASSE-FIL	1	1				
13	90109–06M86	BOLT BOULON	2	2				
14	6BG–42815–00–8D	LEVER, CLAMP 1 LEVIER, PRESSE 1	1	1				
15	90386–12M37	BUSH DOUILLE	1	1				
16	90386–12MA2	BUSH DOUILLE	1	1				
17	90206–12052	WASHER, WAVE RONDELLE, ONDULEE	1	1				
18	90201–12M07	WASHER, PLATE RONDELLE, PLATE	1	1				
19	6BG–42816–00	LEVER, CLAMP 2 LEVIER, PRESSE 2	1	1				
20	97D95–06014	BOLT, HEXAGON DEEP RECESS VIS HEXAGONAL	1	1				
21	66T–43144–00	HOOK, SPRING CROCHET	1	1				
22	90109–06M86	BOLT BOULON	1	1				
23	90506–18023	SPRING, TENSION RESSORT, TENSION	1	1				
24	68U–42727–01	GROMMET PASSE-FIL	1	1				
25	6BG–24329–01	SEAL JOINT	1	1				
26	6BG–42741–10–8D	APRON CAPOT LATERAL	1	1				
27	95380–06600	NUT, HEXAGON ECROU	2	2				

FIG. 21 BOTTOM COWLING 1 — CAPOT INFERIEUR 1

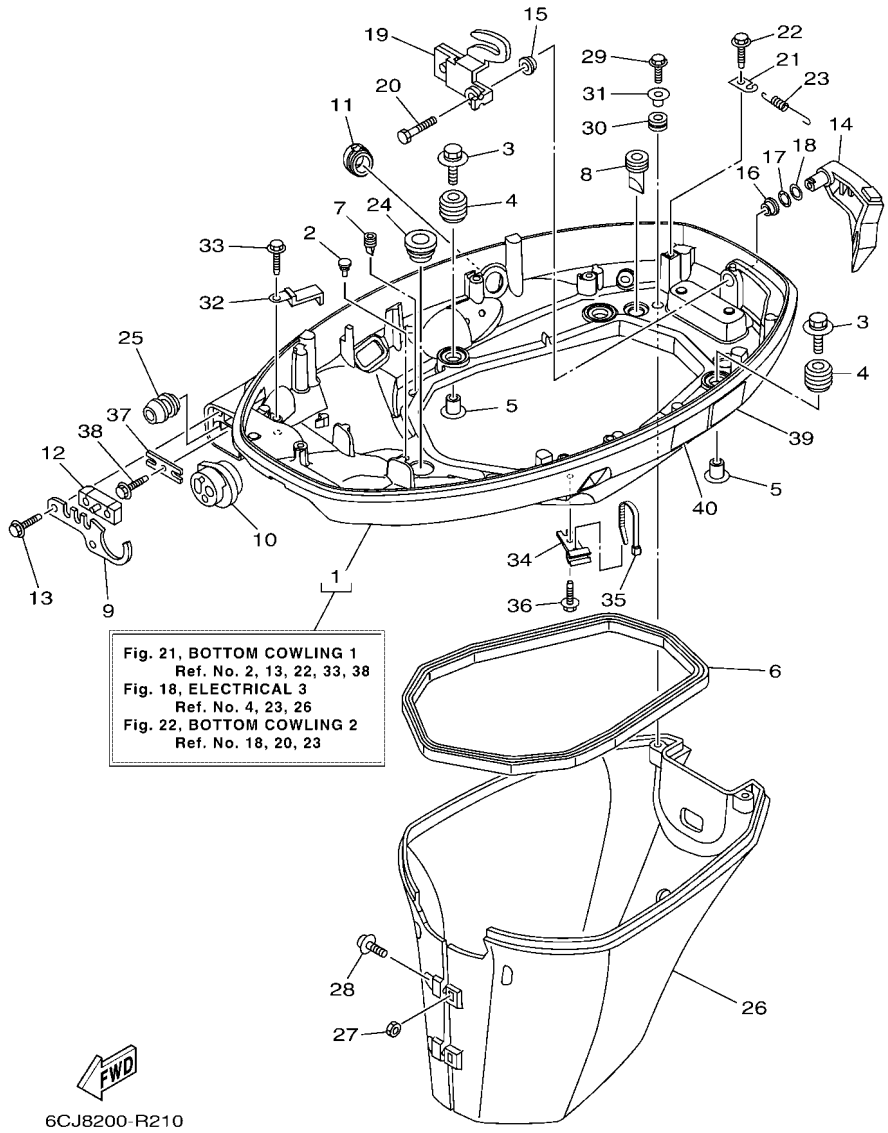

REF. NO.	PART NO. N° PIECES	DESCRIPTION DESCRIPTION	ET	ET1				REMARKS REMARQUES
28	97980–06325	SCREW, WITH WASHER VIS, AVEC RONDELLE	2	2				
29	90109–06M80	BOLT BOULON	2	2				
30	90480–13M24	GROMMET PASSE-FIL	2	2				
31	90387–06M43	COLLAR COLLERETTE	2	2				
32	90462–20005	CLAMP BRIDE	1	1				
33	90109–06M86	BOLT BOULON	1	1				
34	90464–09M49	CLAMP BRIDE	1	1				
35	90465–11M10	CLAMP BRIDE	1	1				
36	90109–06M86	BOLT BOULON	1	1				
37	6BG–48538–00	CLAMP, CABLE 1 COLLIER	1	1				
38	90109–06M86	BOLT BOULON	1	1				
39	6EE–42794–40	LABEL, WARNING (GENERAL) ETIQUETTE, AVERTISSEMENT	1	1				
40	6EE–42794–50	LABEL, WARNING (GENERAL) ETIQUETTE, AVERTISSEMENT	1	1				

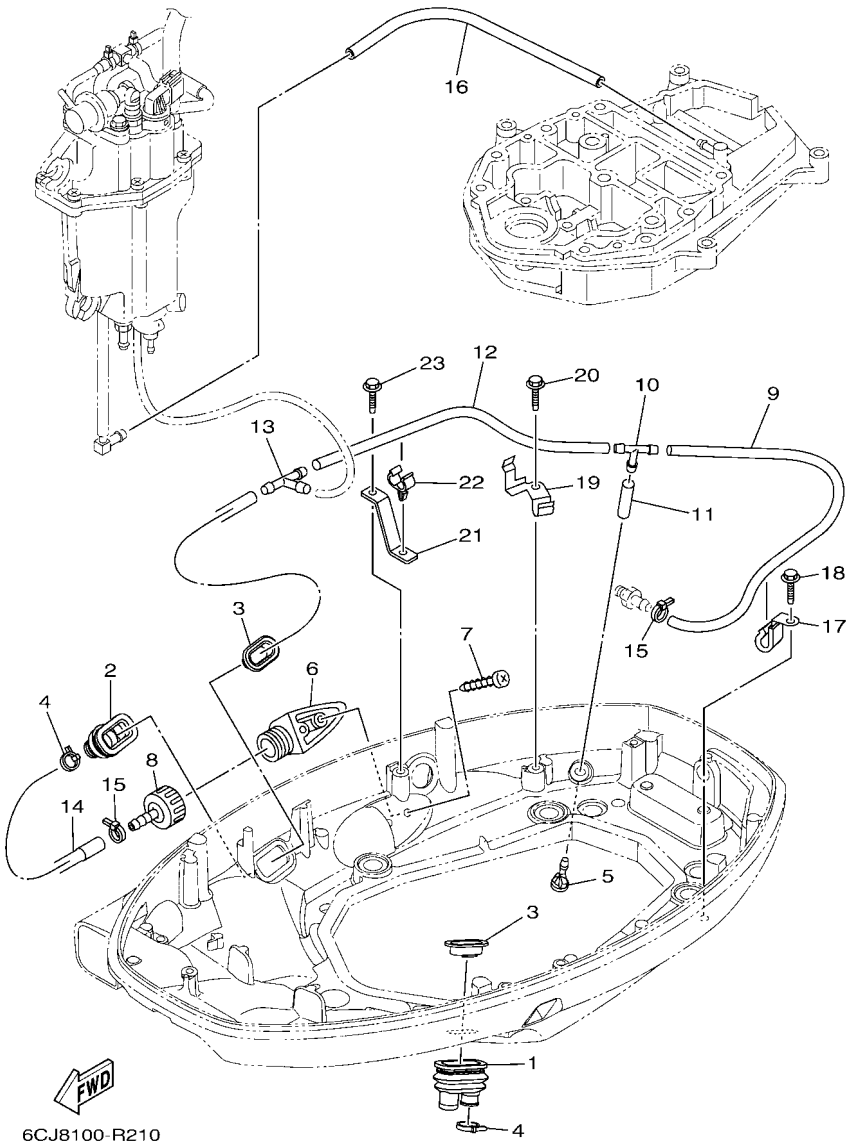

FIG. 22 BOTTOM COWLING 2 — CAPOT INFERIEUR 2

REF. NO.	PART NO. N° PIECES	DESCRIPTION DESCRIPTION	ET	ET1				REMARKS REMARQUES
1	6H1–42726–31	GROMMET PASSE-FIL	1	1				
2	6BG–42724–01	GROMMET PASSE-FIL	1	1				
3	6BG–42384–00	SEAL, CAP JOINT, CAPUCHON	2	2				
4	90465–11M10	CLAMP BRIDE	2	2				
5	6BL–44391–00	NIPPLE, HOSE RACCORD D'ESSENCE	1	1				
6	6AW–12572–00	ADAPTER ADAPTATEUR	1	1				
7	97780–60520	SCREW, TAPPING VIS, TETE BOMBEE	2	2				
8	6R3–12580–00	JOINT ASSY ARTICULER (ENS.)	1	1				
9	90445–09036	HOSE (L400) DURITE (L400)	1	1				
10	688–24378–00	PIPE, JOINT 3 DURITE RACCORDEMENT 3	1	1				
11	90445–09220	HOSE (L30) DURITE (L30)	1	1				
12	90445–096H2	HOSE (L280) DURITE (L280)	1	1				
13	688–24378–00	PIPE, JOINT 3 DURITE RACCORDEMENT 3	1	1				
14	6BG–12481–00	PIPE 1 DURITE 1	1	1				
15	90465–11M10	CLAMP BRIDE	2	2				
16	90445–09304	HOSE (L310) DURITE (L310)	1	1				
17	90462–08067	CLAMP BRIDE	1	1				
18	90109–06M86	BOLT BOULON	1	1				
19	6BG–24136–01	CLAMP 2 COLLIER 2	1	1				
20	90109–06M86	BOLT BOULON	1	1				
21	6CJ–24135–00	CLAMP 1 COLLIER 1	1	1				
22	90464–09130	CLAMP BRIDE	1	1				
23	90109–06M86	BOLT BOULON	1	1				

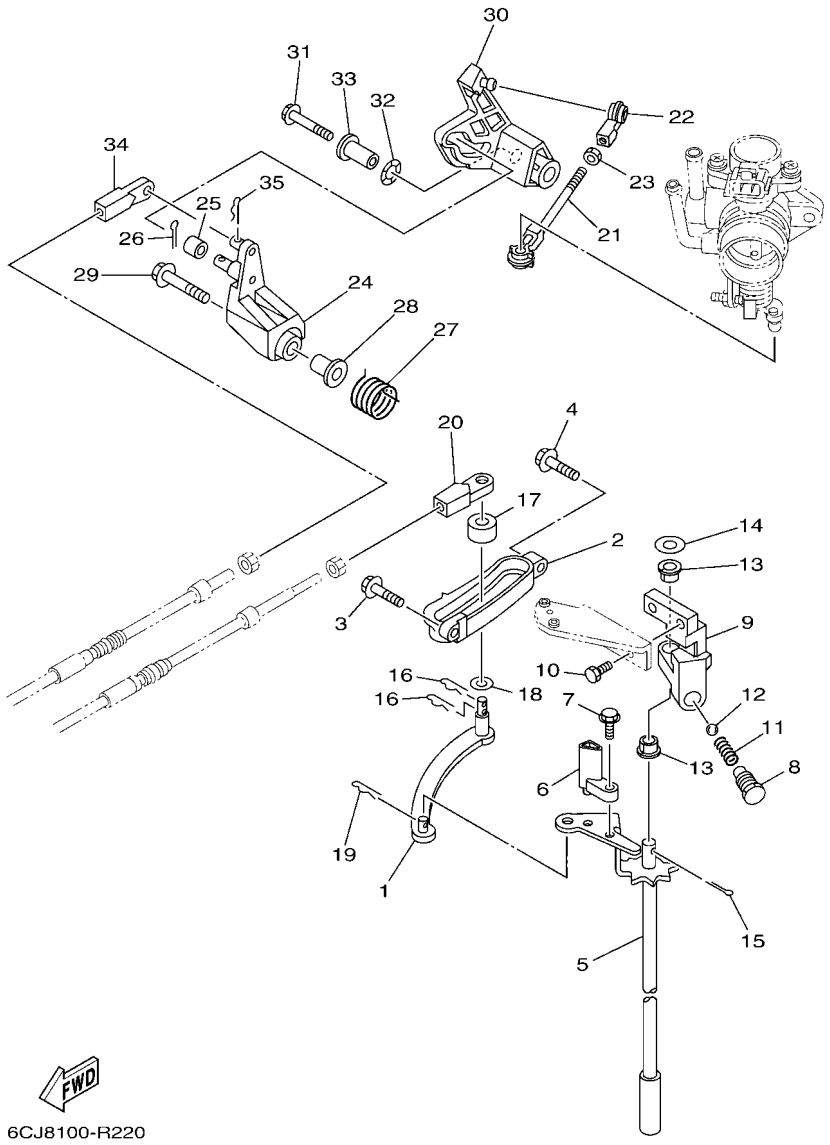

FIG. 23 CONTROL — COMMANDE

REF. NO.	PART NO. N° PIECES	DESCRIPTION DESCRIPTION	ET	ET1				REMARKS REMARQUES
1	69W–44121–00	LEVER, SHIFT ROD LEVIER, TIGE D'INVERSION	1	1				
2	62Y–44117–01	BRACKET SUPPORT	1	1				
3	97E95–06520	BOLT, HEXAGON W/W DEEP RECESS VIS HEXAGONAL AVC RONDELLE	1	1				
4	97E95–06525	BOLT, HEXAGON W/W DEEP RECESS VIS HEXAGONAL AVC RONDELLE	1	1				
5	6C5–44120–03	HANDLE GEAR SHIFT ASSY LEVIER D'EMBRAYAGE	1	1				
6	6C5–44122–00	BUSHING, SHIFT ROD LEVER DOUILLE, LEVIER D'EMBRAYAGE	1	1				
7	97595–05514	BOLT, WITH WASHER VIS HEXAGONAL AVC RONDELLE	1	1				
8	62Y–42715–01	BUSHING 2 COUSSINET 2	1	1				
9	62Y–44118–00–94	BRACKET SUPPORT	1	1				
10	90101–06063	BOLT BOULON	2	2				
11	90501–12082	SPRING, COMPRESSION RESSORT, COMPRESSION	1	1				
12	93501–04M02	BALL BILLE	1	1				
13	90386–90M90	BUSH DOUILLE	2	2				
14	90201–10M20	WASHER, PLATE RONDELLE, PLATE	1	1				
15	91490–20015	PIN. COTTER GOUPILLE	1	1				
16	90468–18008	CLIP JONC	2	2				
17	688–44122–00	BUSHING, SHIFT ROD LEVER DOUILLE, LEVIER D'EMBRAYAGE	1	1				
18	90202–07M07	WASHER, PLATE RONDELLE, PLATE	1	1				
19	90468–18008	CLIP JONC	1	1				
20	69W–48344–00	CABLE END, REMOTE CONTROL CHAPE CABLE	1	1				
21	688–41211–01	LINK, ACCEL. BIELLETTE, ACCELERATION	1	1				
22	6H4–41237–00	JOINT, LINK RACCORD	1	1				
23	95380–05700	NUT ECROU	1	1				
24	62Y–42154–A0	LEVER, THROTTLE CONTROL LEVIER DE COMMANDE D'AVANCE	1	1				
25	6C5–42171–00	BUSHING COUSSINET	1	1				
26	91490–16010	PIN. COTTER GOUPILLE	1	1				
27	62Y–44135–00	SPRING RESSORT	1	1				

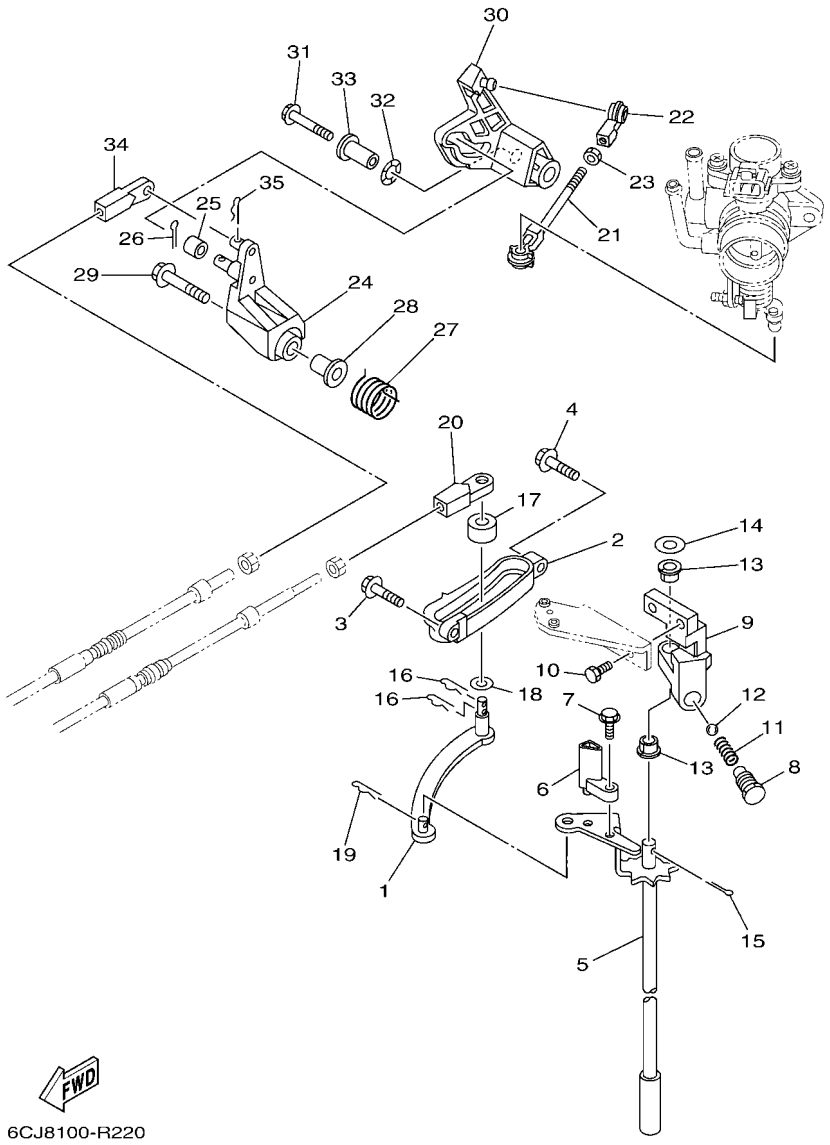

FIG. 23 CONTROL — COMMANDE

REF. NO.	PART NO. N° PIECES	DESCRIPTION DESCRIPTION	ET	ET1				REMARKS REMARQUES
28	90387–06M45	COLLAR COLLERETTE	1	1				
29	90119–06297	BOLT, WITH WASHER BOULON, AVEC RONDELLE	1	1				
30	6BG–42335–A0	LEVER, ACCEL. CONTROL LEVIER, ACCELERATION	1	1				
31	95D95–06045	BOLT, FLANGE DEEP RECESS BOULON FIXATION	1	1				
32	90206–10M04	WASHER, WAVE RONDELLE, ONDULEE	1	1				
33	90387–06279	COLLAR COLLERETTE	1	1				
34	69W–48344–00	CABLE END, REMOTE CONTROL CHAPE CABLE	1	1				
35	90468–18008	CLIP JONC	1	1				

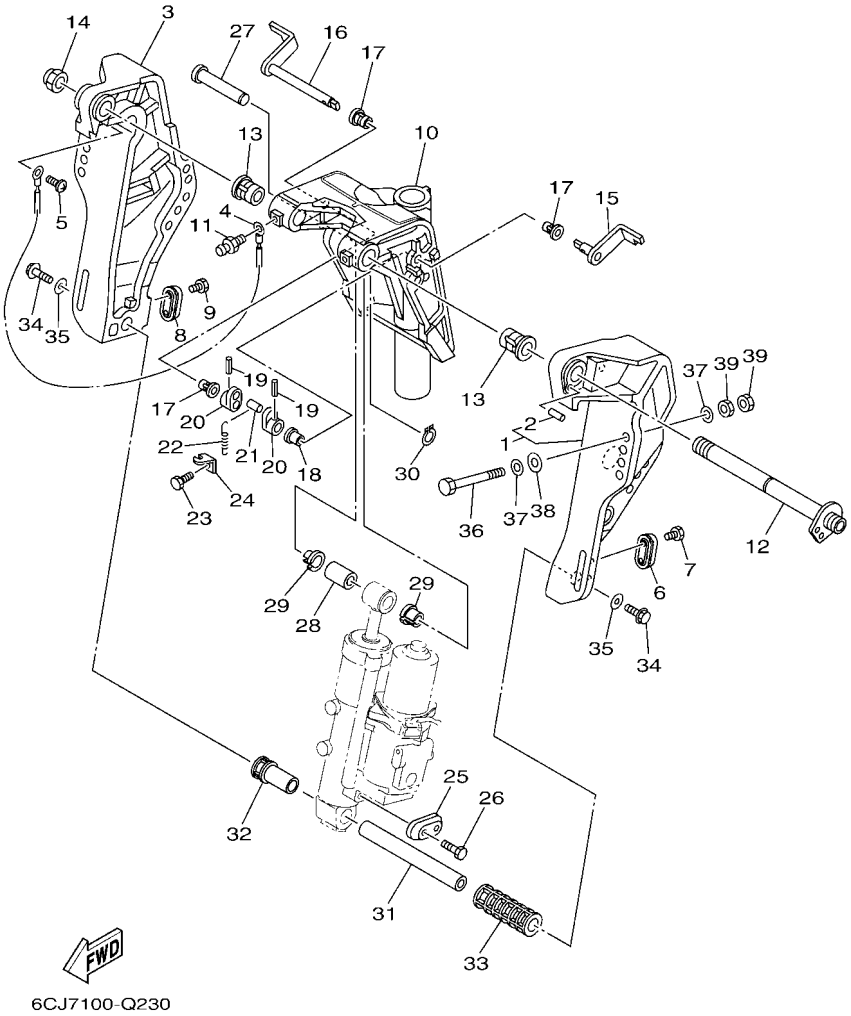

FIG. 24 BRACKET 1 SUPPORT 1

REF. NO.	PART NO. N° PIECES	DESCRIPTION DESCRIPTION	ET	ET1				REMARKS REMARQUES
1	6C5–43111–10–8D	BRACKET, CLAMP 1 PRESSE 1	1	1				FOR TILT LIMIT FOR TILT LIMIT
2	93606–19002	.PIN, DOWEL .GOUPILLE	1	1				
3	6C5–43112–01–8D	BRACKET, CLAMP 2 PRESSE 2	1	1				
4	6E5–82148–00	WIRE, LEAD 4 FIL 4	1	1				
5	97885–06008	SCREW, PAN HEAD VIS, A ENCOCHE	1	1				
6	65W–45251–00	ANODE ANODE	1	1				
7	90101–06020	BOLT BOULON	2	2				
8	65W–45251–00	ANODE ANODE	1	1				
9	90101–06020	BOLT BOULON	2	2				
10	6C5–43311–01–8D	BRACKET, SWIVEL 1 SUPPORT, PIVOT 1	1	1				
11	93700–06002	NIPPLE, GREASE PION	3	3				
12	6C5–43131–00	BOLT, CLAMP BRACKET BOULON, PRESSE	1	1				FOR TILT LIMIT FOR TILT LIMIT
13	90386–22MA4	BUSH DOUILLE	2	2				
14	90185–22M11	NUT, SELF-LOCKING ECROU,AUTO-BLOQUANT	1	1				FOR TILT LIMIT FOR TILT LIMIT
15	6C5–43181–00	LEVER, TILT STOP 1 LEVIER VERROUILLAGE RELEVAGE 1	1	1				
16	6C5–43185–00	LEVER, TILT STOP 2 LEVIER VERROUILLAGE RELEVAGE 2	1	1				
17	90386–10M16	BUSH DOUILLE	3	3				
18	90386–10025	BUSH DOUILLE	1	1				
19	91690–30020	PIN, SPRING AGRAFFE	2	2				
20	6G5–43148–00	COLLAR, DISTANCE ENTRETOISE	2	2				
21	90249–06M19	PIN GOUPILLE	1	1				
22	90506–14M24	SPRING, TENSION RESSORT, TENSION	1	1				
23	97D95–06010	BOLT, HEXAGON DEEP RECESS VIS HEXAGONAL	1	1				
24	6G5–43144–00	HOOK, SPRING CROCHET	1	1				
25	65W–45251–00	ANODE ANODE	1	1				
26	90101–06020	BOLT BOULON	2	2				
27	6E5–43126–02	PIN, UPPER SHOCK MOUNT AXE, SUPERIEUR AMORTISSEUR	1	1				

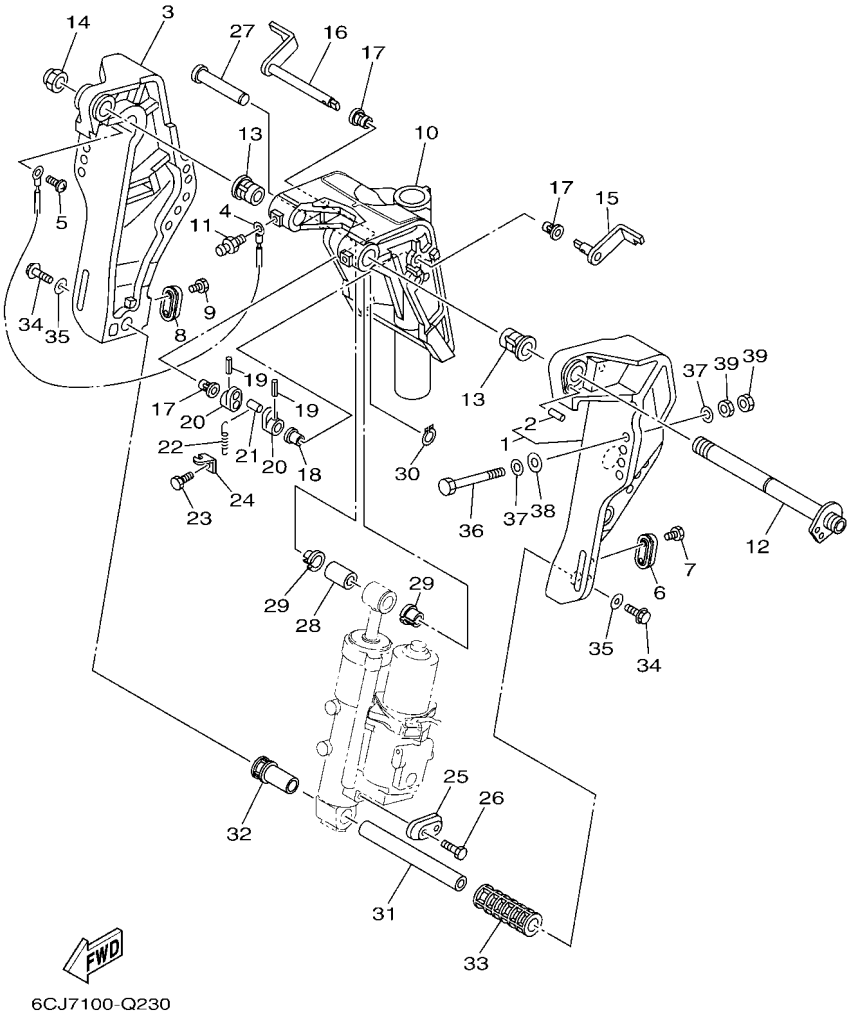

FIG. 24 BRACKET 1 — SUPPORT 1

REF. NO.	PART NO. N° PIECES	DESCRIPTION DESCRIPTION	ET	ET1				REMARKS REMARQUES
28	90386–18M92	BUSH DOUILLE	1	1				
29	90386–18M35	BUSH DOUILLE	2	2				
30	93410–18M05	CIRCLIP CIRCLIP	1	1				
31	6CJ–43818–00	PIN, LOWER SHOCK MOUNT AXE, INFERIEUR AMORTISSEUR	1	1				
32	6C5–43833–00	PIPE TUYAU	1	1				
33	6C5–43834–00	PIPE TUYAU	1	1				
34	90119–10054	BOLT, WITH WASHER BOULON, AVEC RONDELLE	2	2				
35	90201–10060	WASHER, PLATE RONDELLE, PLATE	2	2				
36	90101–12063	BOLT (L:105MM) BOULON (L:105MM)	4	4				
37	90201–12062	WASHER, PLATE RONDELLE, PLATE	8	8				
38	90201–12426	WASHER, PLATE RONDELLE, PLATE	4	4				
39	95380–12600	NUT ECROU	8	8				

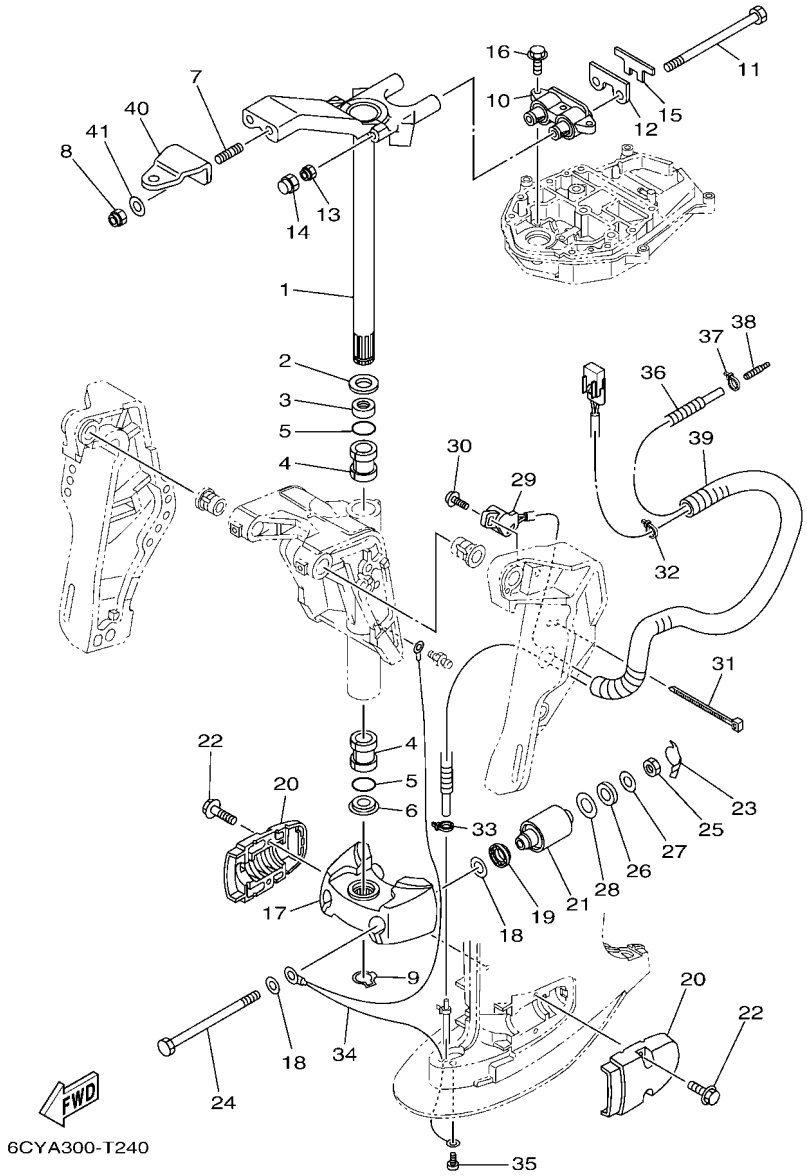

FIG. 25 BRACKET 2 — SUPPORT 2

REF. NO.	PART NO. N° PIECES	DESCRIPTION DESCRIPTION	ET	ET1				REMARKS REMARQUES
1	69W–42510–01–8D	STEERING BRACKET ASSY DIRECTION SUPPORT (ENS.)	1	1				
2	90201–30M00	WASHER, PLATE RONDELLE, PLATE	1	1				
3	90386–30M78	BUSH DOUILLE	1	1				
4	90386–30M77	BUSH DOUILLE	2	2				
5	93210–29M94	O-RING JOINT TORIQUE	2	2				
6	90386–30M60	BUSH DOUILLE	1	1				
7	90116–10063	BOLT, STUD GOUJON	2	2				
8	90185–10027	NUT, SELF-LOCKING ECROU,AUTO-BLOQUANT	2	2				
9	93410–28M06	CIRCLIP CIRCLIP	1	1				
10	6CJ–44514–00	MOUNT DAMPER, UPPER SIDE SILENT-BLOC, SUPERIEUR LATERAL	1	1				
11	90109–08229	BOLT BOULON	2	2				
12	6CJ–44526–00	PLATE PLAQUE	1	1				
13	90185–08018	NUT, SELF-LOCKING ECROU,AUTO-BLOQUANT	2	2				
14	6C5–44194–00	CAP CAPUCHON	2	2				
15	6CJ–44533–00	DAMPER, UPPER MOUNT RUBBER COUVERCLE, SUSPENSION INFERIEU	1	1				
16	97E75–08530	BOLT, HEXAGON W/W DEEP RECESS VIS HEXAGONAL AVC RONDELLE	3	3				
17	6C5–44551–00–8D	HOUSING, LOWER MOUNT RUBBER 1 BOITIER, SILENT-BLOC INFERIEUR	1	1				
18	90201–12M16	WASHER, PLATE RONDELLE, PLATE	4	4				
19	6C5–43885–01	GROMMET PASSE-FIL	2	2				
20	6C5–44552–00–8D	HOUSING, LOWER MOUNT RUBBER 2 BOITIER, SILENT-BLOC INFERIEUR	2	2				
21	69W–44555–00	MOUNT DAMPER, LOWER SIDE SILENT-BLOC, INFERIEUR LATERAL	2	2				
22	90119–08094	BOLT, WITH WASHER BOULON, AVEC RONDELLE	4	4				
23	6CJ–44575–00	DAMPER, LOWER MOUNT RUBBER SILENT-BLOC, INFERIEUR	2	2				
24	90109–12MA3	BOLT BOULON	2	2				
25	95380–12600	NUT ECROU	2	2				
26	90202–21100	WASHER, PLATE RONDELLE, PLATE	2	2				
27	90201–13M19	WASHER, PLATE RONDELLE, PLATE	2	2				

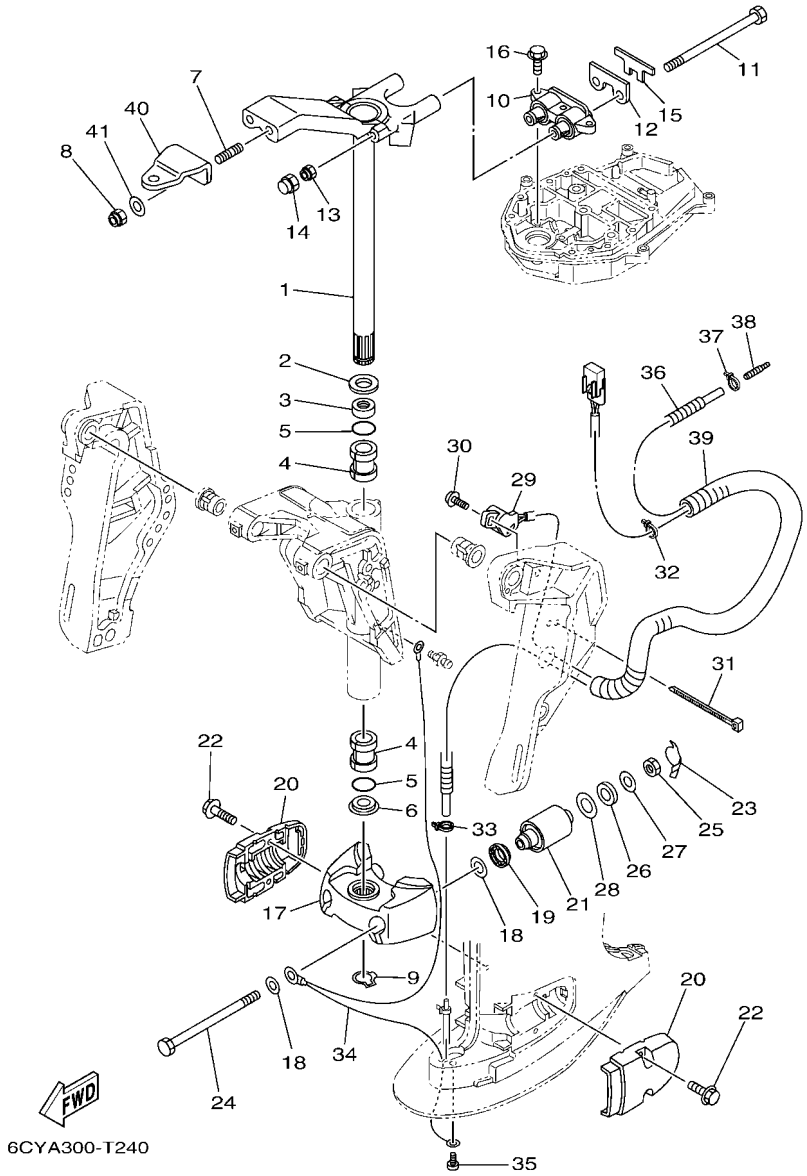

FIG. 25 BRACKET 2 — SUPPORT 2

REF. NO.	PART NO. N° PIECES	DESCRIPTION DESCRIPTION	ET	ET1				REMARKS REMARQUES
28	90201–22M05	WASHER, PLATE RONDELLE, PLATE	2	2				
29	63D–83672–11	TRIM SENDER INCLINER RACCORD	1	1				
30	97985–06216	SCREW, WITH WASHER VIS, AVEC RONDELLE	2	2				
31	90464–99004	CLAMP BRIDE	1	1				
32	90465–11M10	CLAMP BRIDE	1	1				
33	90465–11M10	CLAMP BRIDE	1	1				
34	67C–82127–10	WIRE, LEAD 2 FIL 2	1	1				
35	97885–06008	SCREW, PAN HEAD VIS, A ENCOCHE	1	1				
36	6CJ–44385–00	HOSE, WATER 1 TUBE D'EAU 1	1	1				
37	90465–11M10	CLAMP BRIDE	1	1				
38	6E5–83558–00	END, NIPPLE RACCORD DE NIPPLE	1	1				
39	90447–19009	TUBE DURITE	1	1				
40	65W–48511–01	HOOK, STEERING ATTACHE, DIRECTION	1	1				
41	90201–10049	WASHER, PLATE RONDELLE, PLATE	2	2				

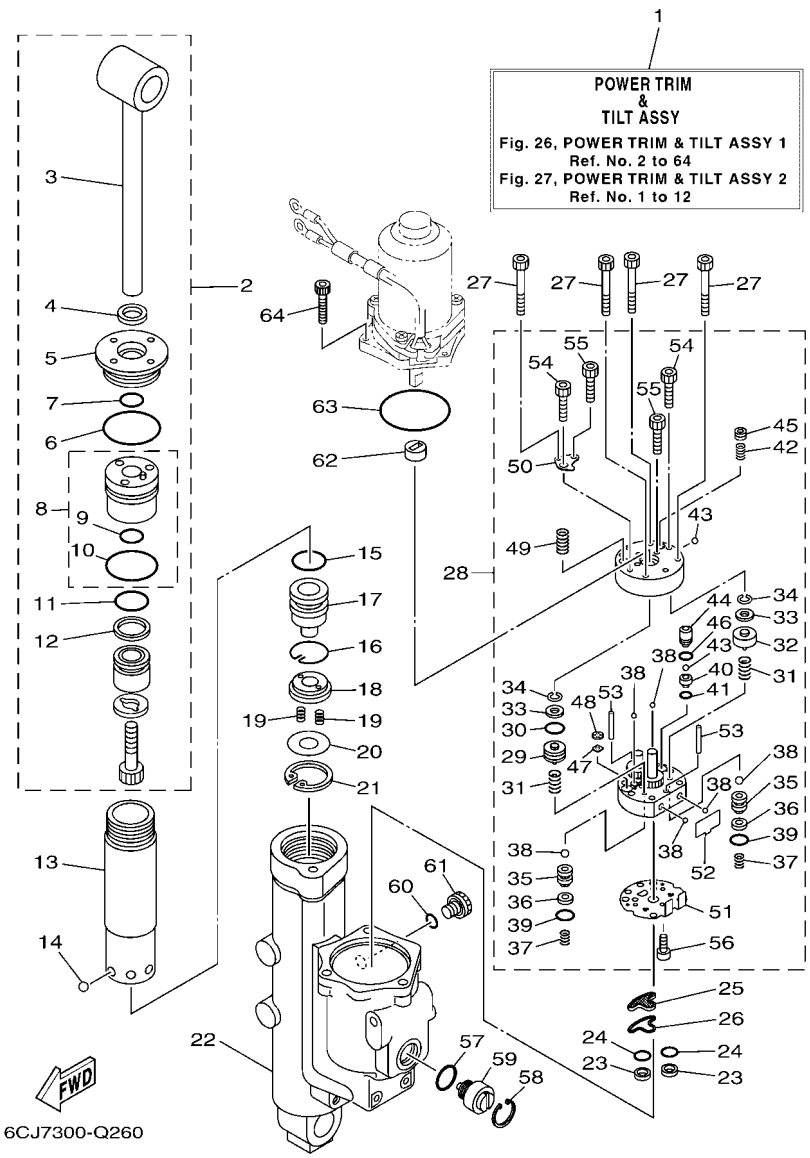

FIG. 26 POWER TRIM & TILT ASSY 1 — PUISSANCE PARER ET INCLINER 1

REF. NO.	PART NO. N° PIECES	DESCRIPTION DESCRIPTION	ET	ET1				REMARKS REMARQUES
1	6CJ–43800–13	POWER TRIM & TILT ASSY PUISSANCE PARER ET INCLINER (E	1	1				
2	6CJ–43810–10	TILT PISTON SUB ASSY INCLINER PISTON AUXILIAIRE(ENS	1	1				
3	6CJ–43801–10	.ROD .TIGE	1	1				
4	62Y–43822–00	.SEAL, TRIM DUST .JOINT	1	1				
5	6CJ–43821–10	.SCREW, TRIM CYLINDER END .VIS	1	1				
6	93210–49001	.O-RING .JOINT TORIQUE	1	1				
7	6CJ–43863–00	.O-RING .JOINT TORIQUE	1	1				
8	6CJ–4380R–10	.CYLINDER END SUB ASSY .CYLINDRE RACCORD (ENS.)	1	1				
9	6CJ–43863–00	..O-RING ..JOINT TORIQUE	1	1				
10	93210–44006	..O-RING ..JOINT TORIQUE	1	1				
11	6C5–43861–00	.O-RING .JOINT TORIQUE	1	1				
12	6C5–43871–00	.RING, BACK UP .SEGMENT	1	1				
13	6CJ–22471–10	CYLINDER, SHOCK ABSORBER CYLINDRE, AMORTISSEUR	1	1				
14	93503–16003	BALL BILLES	6	6				
15	6C5–43861–00	O-RING JOINT TORIQUE	1	1				
16	6C5–43875–00	RING, SNAP RESSORT	1	1				
17	6CJ–4381B–10	FREE PISTON SUB ASSY PISTON AUXILIAIRE (ENS.)	1	1				
18	6C5–43899–00	PLATE STOPPER PLAQUETTE	1	1				
19	62X–4384H–00	SPRING RESSORT	2	2				
20	6C5–22435–00	PLATE, VALVE 2 PLAQUE, CLAPET 2	1	1				
21	99009–32500	CIRCLIP CIRCLIP	1	1				
22	6CJ–4380K–12	CYLINDER, TILT SUB ASSY CYLINDRE	1	1				
23	6C5–43817–10	FILTER 2 FILTRE 2	2	2				
24	69J–4389J–00	O-RING JOINT TORIQUE	2	2				
25	6C5–43816–00	FILTER 1 FILTRE 1	1	1				
26	6C5–4380G–00	PLATE PLAQUE	1	1				
27	91318–05045	BOLT BOULON	4	4				

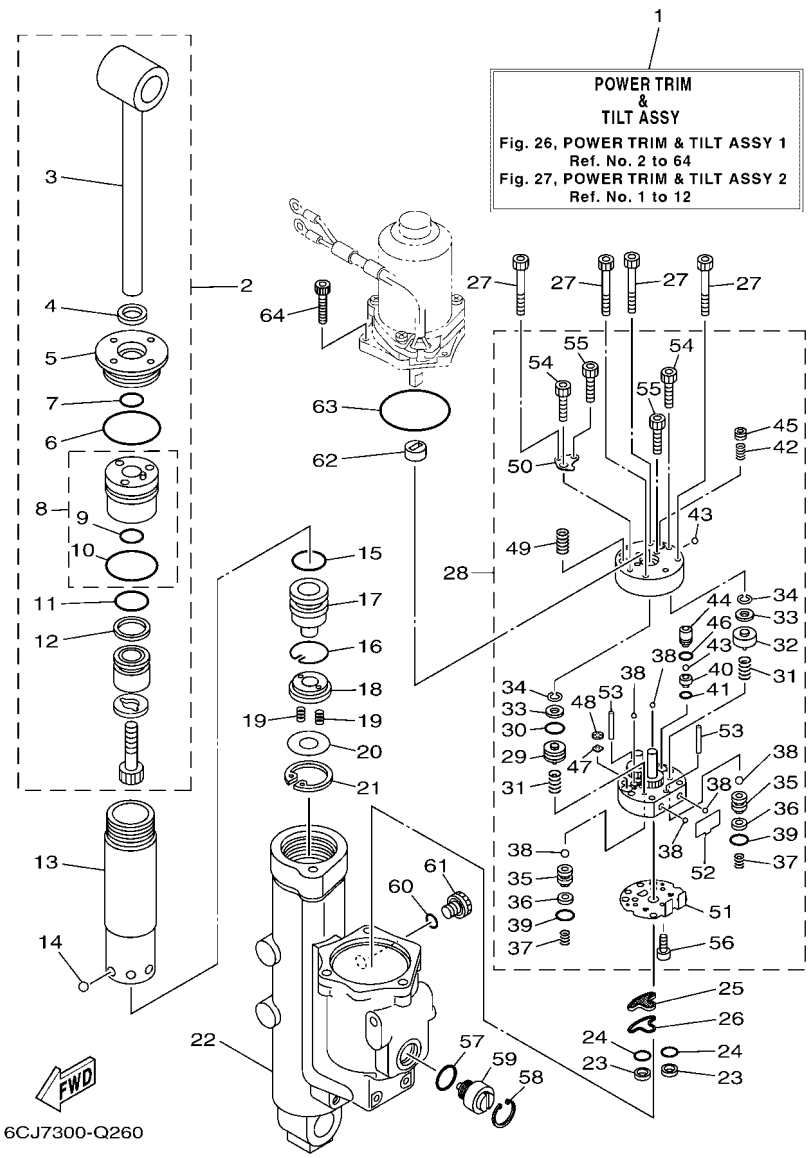

FIG. 26 POWER TRIM & TILT ASSY 1 — PUISSANCE PARER ET INCLINER 1

REF. NO.	PART NO. N° PIECES	DESCRIPTION DESCRIPTION	ET	ET1				REMARKS REMARQUES
28	6CJ–43830–10	GEAR PUMP ASSY POMPE A PIGNON (ENS.)	1	1				
29	6D8–43841–00	.PISTON, SHUTTLE .PISTON	1	1				
30	6H1–43883–00	.O-RING .JOINT TORIQUE	1	1				
31	69J–43894–00	.SPRING, SHUTTLE RETURN .RESSORT	2	2				
32	6D8–4384M–00	.PISTON, SHUTTLE 2 .PISTON 2	1	1				
33	69A–4384F–00	.SEAL, MAIN VALVE .JOINT	2	2				
34	99002–03600	.CIRCLIP .CIRCLIP	2	2				
35	6EK–4382E–00	.ADAPTOR 2 .ADAPTEUR 2	2	2				
36	6C6–4387G–00	.WASHER .RONDELLE	2	2				
37	6C6–43853–00	.SPRING, MAIN VALVE .RESSORT	2	2				
38	93505–32038	.BALL .BILLE	6	6				
39	69J–4389J–00	.O-RING .JOINT TORIQUE	2	2				
40	6D8–43851–00	.SEAT, RELIEF VALVE .SIEGE	1	1				
41	93210–064A5	.O-RING .JOINT TORIQUE	1	1				
42	6C5–43855–10	.SPRING, UP RELIEF .RESSORT	1	1				
43	93501–08001	.BALL .BILLE	2	2				
44	6D8–43844–00	.PIN, VALVE SUPPORT .GOUPILLE	1	1				
45	6D8–43843–00	.SCREW, VALVE LOCK .VIS	1	1				
46	93210–04N51	.O-RING .JOINT TORIQUE	1	1				
47	6H1–4384G–11	.SEAL, RELIEF VALVE .JOINT	1	1				
48	6H1–43844–10	.PIN, VALVE SUPPORT .GOUPILLE	1	1				
49	6C5–43856–10	.SPRING, DOWN RELIEF .RESSORT	1	1				
50	6D8–4382L–00	.CAP, RELIEF VALVE .CAPUCHON	1	1				
51	6C5–43895–00	.SEAT, RELIEF VALVE .SIEGE	1	1				
52	6C5–43854–00	.SPRING, MANUAL RELEASE .RESSORT	1	1				
53	93604–26256	.PIN, DOWEL .CLAVETTE	2	2				
54	91318–05030	.BOLT .BOULON	2	2				

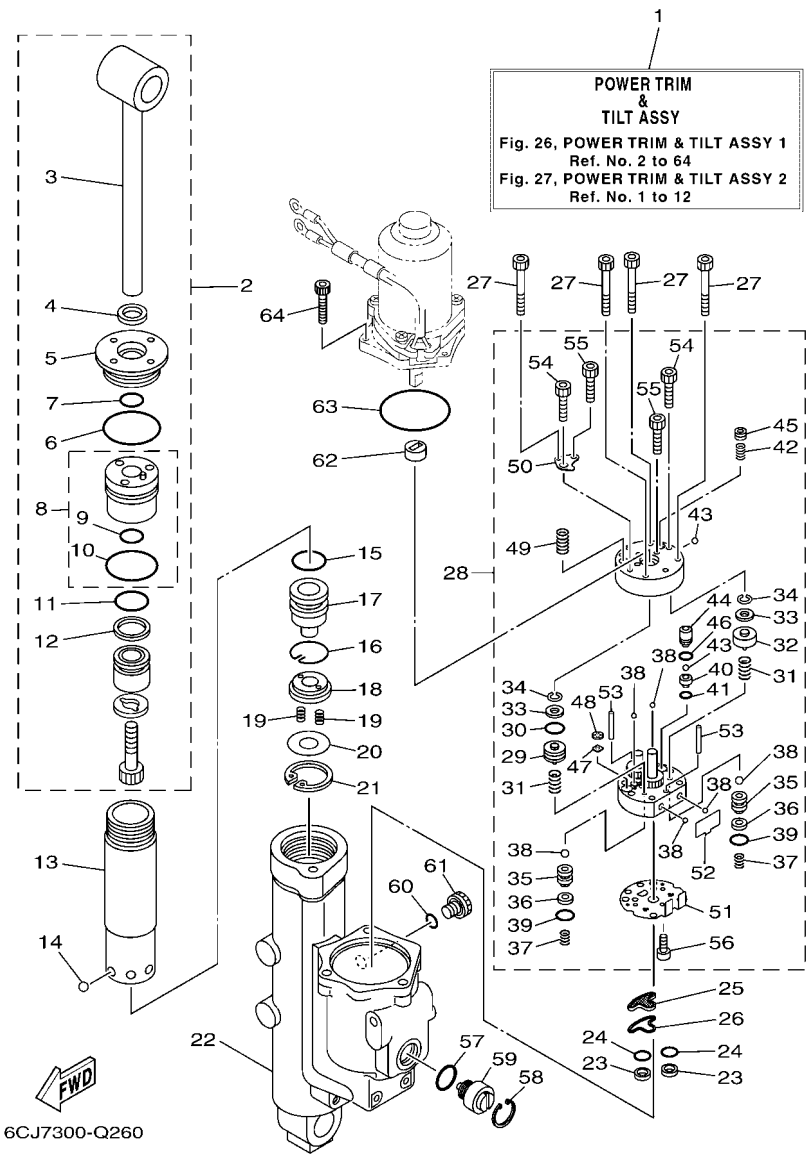

FIG. 26 POWER TRIM & TILT ASSY 1 — PUISSANCE PARER ET INCLINER 1

REF. NO.	PART NO. N° PIECES	DESCRIPTION DESCRIPTION	ET	ET1				REMARKS REMARQUES
55	91318–03025	.BOLT .BOULON	2	2				
56	91318–03005	.BOLT .BOULON	1	1				
57	6D8–43863–00	O-RING JOINT TORIQUE	1	1				
58	6H1–43875–00	RING, SNAP RESSORT	1	1				
59	6CJ–43845–10	SCREW, MANUAL RELEASE VIS	1	1				
60	6CJ–43861–10	O-RING JOINT TORIQUE	1	1				
61	6CJ–43829–10	PLUG, RESERVOIR BOUCHON	1	1				
62	6C5–43831–00	CONNECTOR, SHAFT RACCORD	1	1				
63	93210–64488	O-RING JOINT TORIQUE	1	1				
64	91380–05020	BOLT BOULON	3	3				

FIG. 27 POWER TRIM & TILT ASSY 2 — PUISSANCE PARER ET INCLINER 2

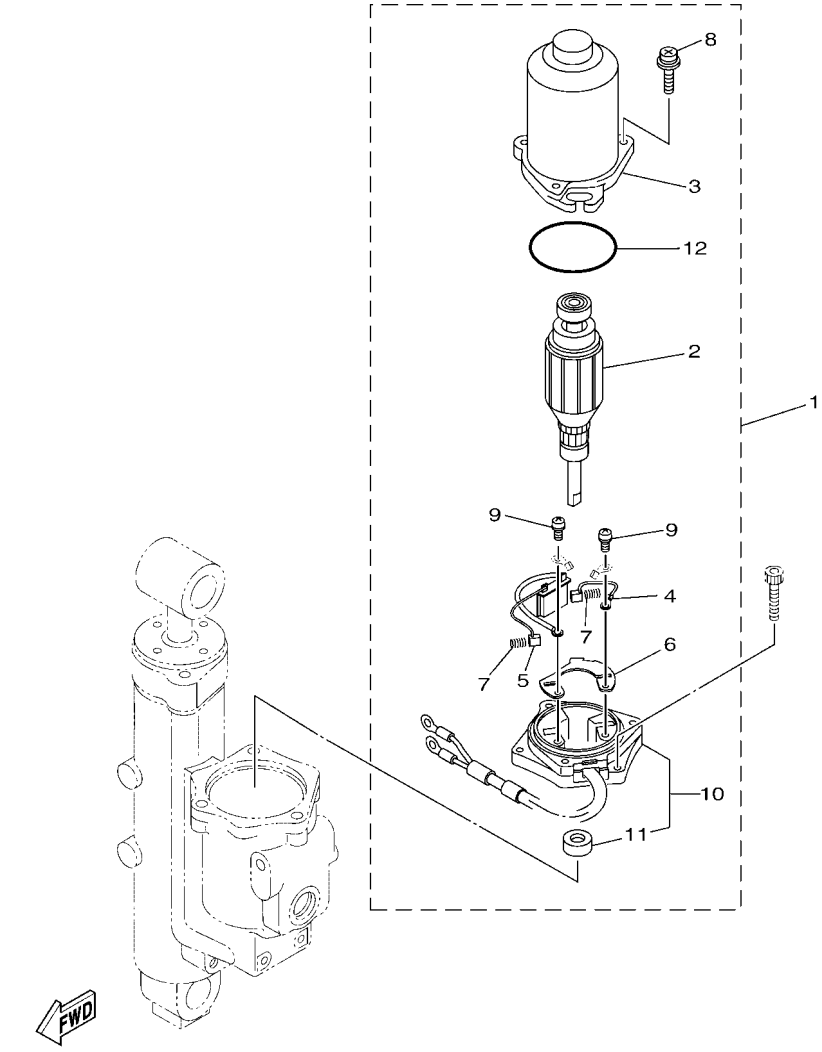

REF. NO.	PART NO. N° PIECES	DESCRIPTION DESCRIPTION	ET	ET1				REMARKS REMARQUES
1	6CJ–43880–13	MOTOR ASSY MOTEUR (ENS.)	1	1				
2	6CJ–43805–11	.ARMATURE ASSY .INDUIT (ENS.)	1	1				
3	6CJ–43804–11	.STATOR ASSY .STATOR (ENS.)	1	1				
4	6EK–43892–00	.BRUSH 2 .BALAI 2	1	1				
5	6CJ–82181–10	.CIRCUIT BREAKER COMP. .RUPTEUR COMPLET	1	1				
6	6EK–4380F–00	.PLATE, BRUSH HOLDER .PLAQUE	1	1				
7	62X–4386K–00	.SPRING, BRUSH .RESSORT, BALAI	2	2				
8	6CJ–43879–10	.SCREW, WITH WASHER .VIS, AVEC RONDELLE	3	3				
9	97602–04316	.SCREW, PAN HEAD WITH WASHER .VIS, AVEC RONDELLE	2	2				
10	6CJ–43881–10	.FRAME, END .BATI	1	1				
11	6EK–43882–00	..OIL SEAL ..JOINT SPI	1	1				
12	6CJ–43862–11	.O-RING .JOINT TORIQUE	1	1				

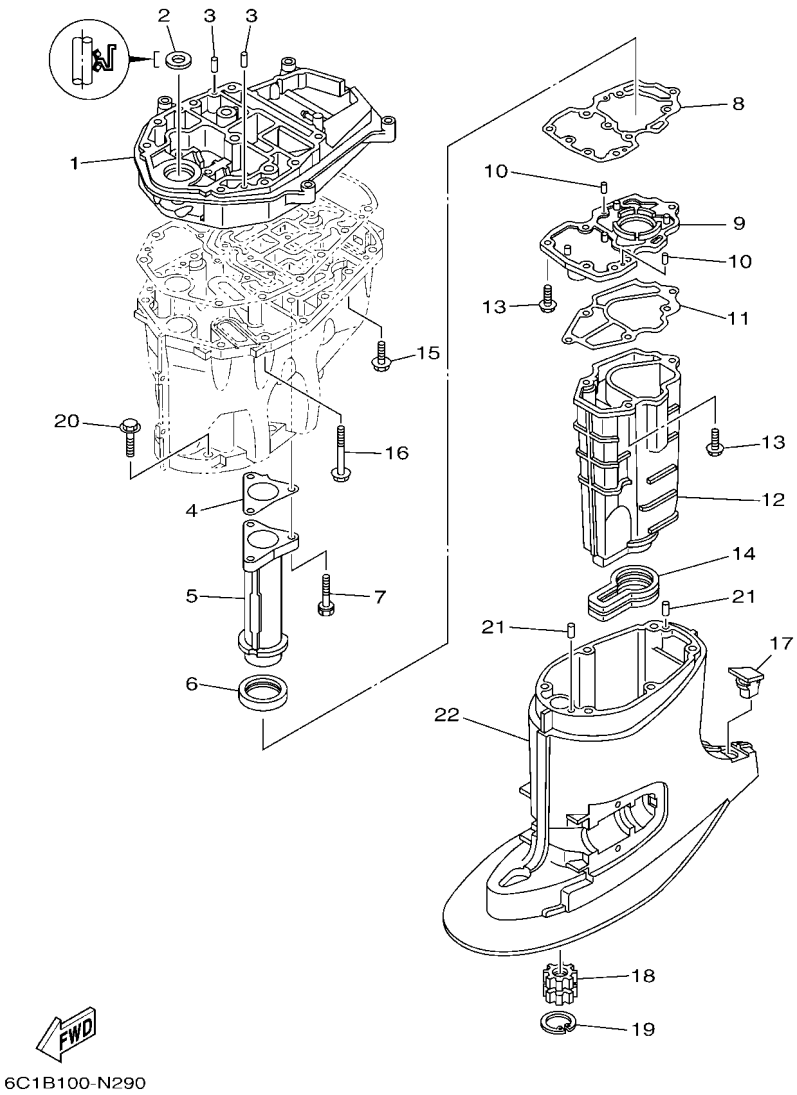

FIG. 28 UPPER CASING FOURREAU

REF. NO.	PART NO. N° PIECES	DESCRIPTION DESCRIPTION	ET	ET1				REMARKS REMARQUES
1	6C5–41137–03	GUIDE, EXHAUST COLLECTEUR D'ECHAPPEMENT	1	1				
2	93103–18011	OIL SEAL JOINT SPY	1	1				
3	93608–12M05	PIN, DOWEL AXE	2	2				
4	6C5–41133–00	GASKET, EXHAUST MANIFOLD 1 JOINT, PIPE D'ECHAPPEMENT	1	1				
5	6C5–41131–00–CA	MANIFOLD, EXT. 1 PIPE D'ECHAPPEMENT	1	1				
6	6C5–46132–00	GASKET 1 JOINT 1	1	1				
7	90119–06261	BOLT, WITH WASHER BOULON, AVEC RONDELLE	3	3				
8	6C5–41134–00	GASKET, EXHAUST MANIFOLD JOINT, PIPE D'ECHAPPEMENT	1	1				
9	6CJ–45181–01	PLATE PLAQUETTE	1	1				
10	93604–10M03	PIN, DOWEL CLAVETTE	2	2				
11	6C5–41135–00	GASKET, EXHAUST MANIFOLD JOINT, PIPE D'ECHAPPEMENT	1	1				
12	6CJ–14711–01	MUFFLER 1 POT D'ECHAPPEMENT 1	1	1				
13	97E75–06525	BOLT, HEXAGON W/W DEEP RECESS VIS HEXAGONAL AVC RONDELLE	6	6				
14	6C5–45123–00	GASKET, MUFFLER JOINT, POT DE DETENTE	1	1				
15	90119–08182	BOLT, WITH WASHER BOULON, AVEC RONDELLE	4	4				
16	90119–08202	BOLT, WITH WASHER BOULON, AVEC RONDELLE	8	8				
17	6C5–45155–01	CAP CAPUCHON	1	1				
18	69W–45318–00	BUSHING, DRIVE SHAFT DOUILLE, ARBRE MOTEUR	1	1				
19	93420–36M01	CIRCLIP CIRCLIP, TYPE S	1	1				
20	97E75–10545	BOLT, HEXAGON W/W DEEP RECESS VIS HEXAGONAL AVC RONDELLE	6	6				
21	93606–12019	PIN, DOWEL GOUPILLE	2	2				
22	6C5–45111–00–8D	CASING, UPPER FOURREAU	1	1				

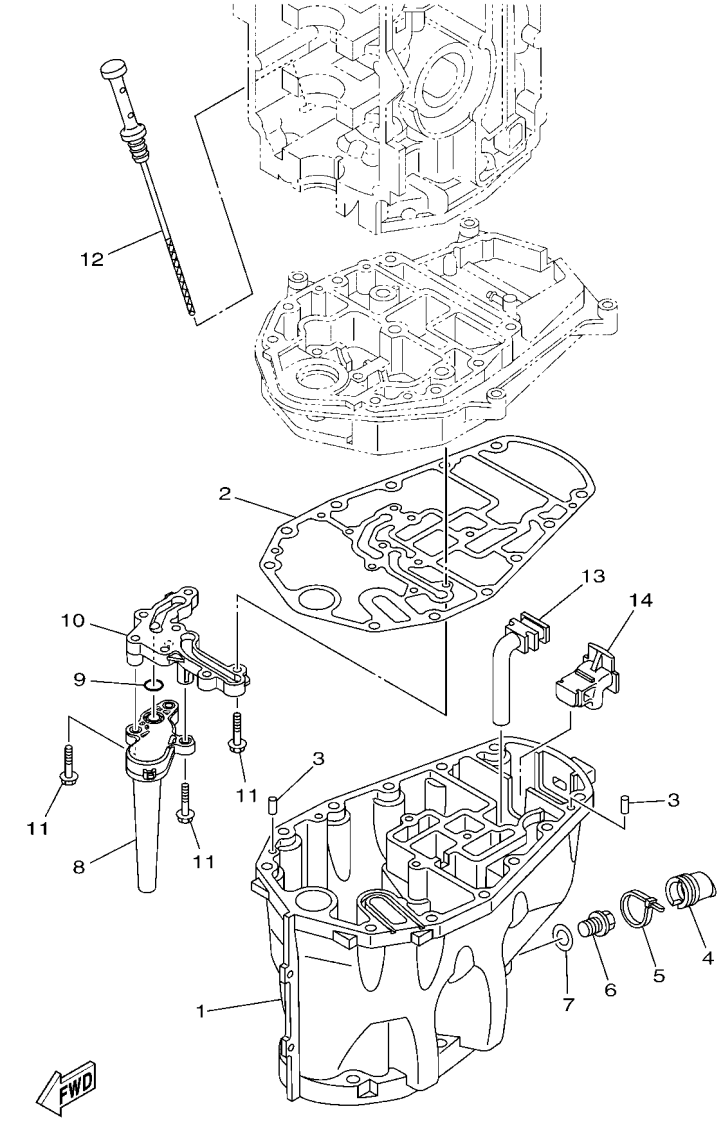

FIG. 29 OIL PAN — VENTILATEUR D'HUILE

REF. NO.	PART NO. N° PIECES	DESCRIPTION DESCRIPTION	ET	ET1				REMARKS REMARQUES
1	6C5–15311–02	OIL PAN VENTILATEUR D'HUILE	1	1				
2	6C5–15312–01	GASKET, OIL PAN JOINT DE VENTILATEUR D'HUILE	1	1				
3	93606–12019	PIN, DOWEL GOUPILLE	2	2				
4	6CJ–15316–01	DAMPER 1 AMORTISSEUR 1	1	1				
5	90465–11M59	CLAMP BRIDE	1	1				
6	90340–14M06	PLUG, STRAIGHT SCREW PLOT, FILETE DROIT	1	1				
7	90430–14M09	GASKET JOINT	1	1				
8	6CJ–13411–10	STRAINER, OIL FILTRE, HUILE	1	1				
9	93210–12790	O-RING JOINT TORIQUE	1	1				
10	6CJ–15333–10	COVER COUVERCLE	1	1				
11	95812–06025	BOLT, FLANGE BOULON	9	9				
12	6C5–15362–00	PLUG, OIL LEVEL PLOT, NIVEAU D'HUILE	1	1				
13	6C5–45135–10	PIPE TUYAU	1	1				
14	6C5–45136–10	PIPE DURITE	1	1				

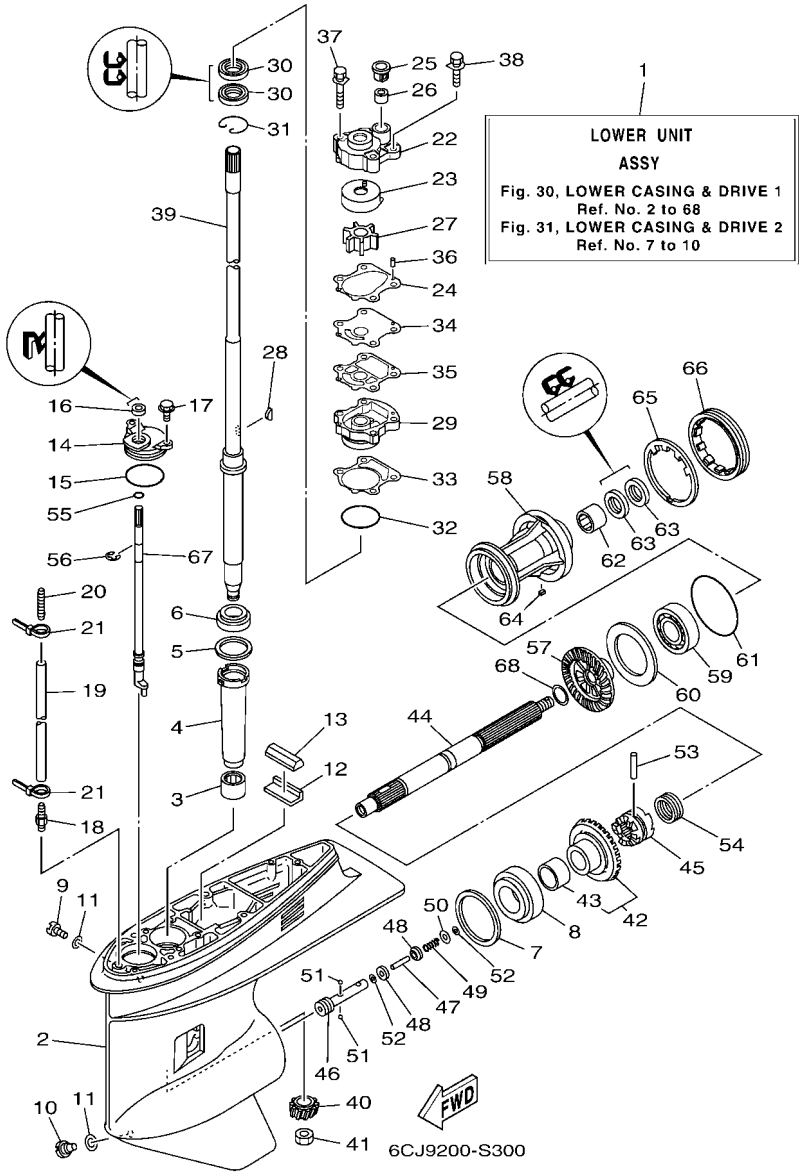

FIG. 30 LOWER CASING & DRIVE 1 — BOITIER D'HELICE TRANSMISSION1

REF. NO.	PART NO. N° PIECES	DESCRIPTION DESCRIPTION	ET	ET1				REMARKS REMARQUES
1	6CJ–45300–32–8D	LOWER UNIT ASSY UNITE INFERIEURE (ENS.)	1	1				
2	67F–45301–00–8D	CASING, LOWER BEQUILLE	1	1				
3	93315–52563	BEARING ROULEMENT	1	1				
4	688–45536–01	SLEEVE, DRIVE SHAFT MANCHON, ARBRE MOTEUR	1	1				
5	688–45587–01	SHIM (T:0.10MM) CALE (T:0.10MM)	1	1				UR UR
	688–45587–10	SHIM (T:0.12MM) CALE (T:0.12MM)	1	1				UR UR
	688–45587–20	SHIM (T:0.15MM) CALE (T:0.15MM)	1	1				UR UR
	688–45587–30	SHIM (T:0.18MM) CALE (T:0.18MM)	1	1				UR UR
	688–45587–40	SHIM (T:0.30MM) CALE (T:0.30MM)	1	1				UR UR
	688–45587–50	SHIM (T:0.40MM) CALE (T:0.40MM)	1	1				UR UR
	688–45587–60	SHIM (T:0.50MM) CALE (T:0.50MM)	1	1				UR UR
6	93332–000U3	BEARING ROULEMENT	1	1				
7	688–45567–01	SHIM (T:0.10MM) CALE (T:0.10MM)	1	1				UR UR
	688–45567–10	SHIM (T:0.12MM) CALE (T:0.12MM)	1	1				UR UR
	688–45567–20	SHIM (T:0.15MM) CALE (T:0.15MM)	1	1				UR UR
	688–45567–30	SHIM (T:0.18MM) CALE (T:0.18MM)	1	1				UR UR
	688–45567–40	SHIM (T:0.30MM) CALE (T:0.30MM)	1	1				UR UR
	688–45567–50	SHIM (T:0.40MM) CALE (T:0.40MM)	1	1				UR UR
	688–45567–60	SHIM (T:0.50MM) CALE (T:0.50MM)	1	1				UR UR
8	93332–00095	BEARING ROULEMENT	1	1				
9	90340–08002	PLUG, STRAIGHT SCREW PLOT, FILETE DROIT	1	1				
10	688–45341–10	PLUG, DRAIN BOUCHON DE VIDANGE	1	1				
11	90430–08003	GASKET JOINT	2	2				
12	663–45376–00	GUIDE, SEAL DAMPER BUTEE, JOINT CAOUTCHOUC	1	1				
13	688–45375–00	DAMPER, SEAL BOURRELET, CAOUTCHOUC	1	1				
14	688–45321–00	PLATE PLAQUETTE	1	1				
15	93210–49046	O-RING JOINT TORIQUE	1	1				

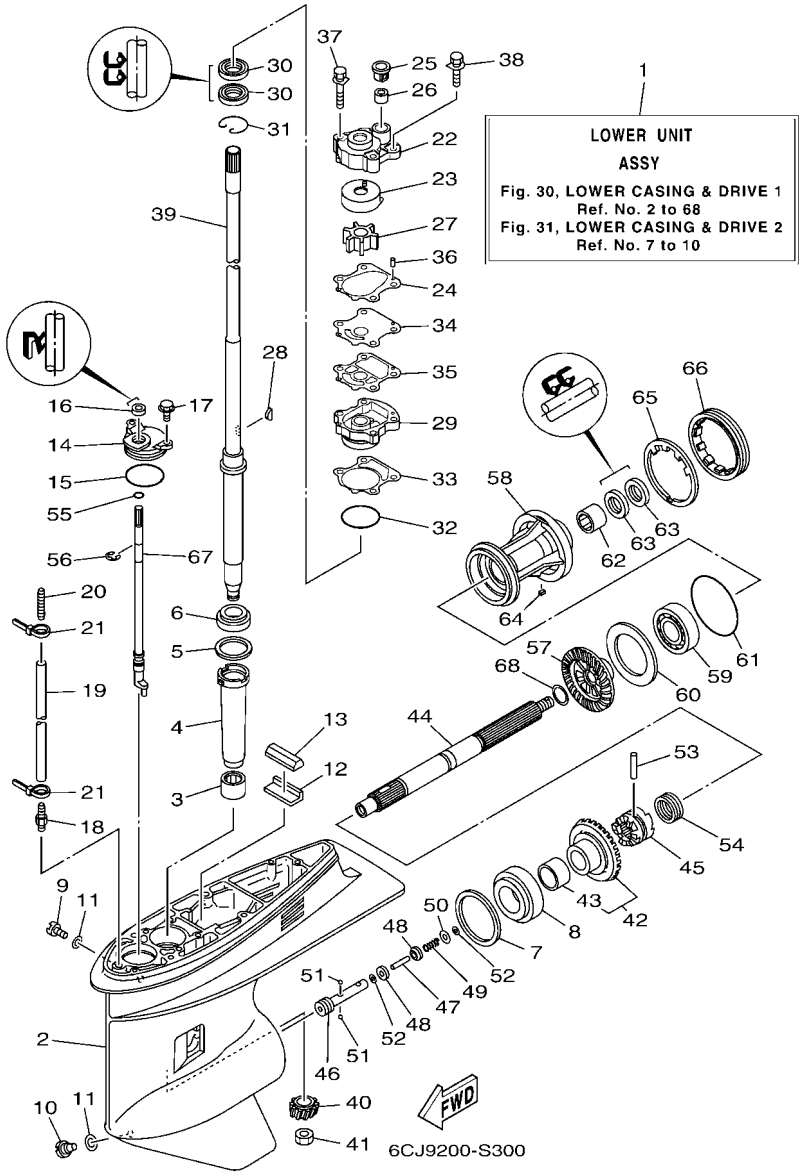

FIG. 30 LOWER CASING & DRIVE 1 — BOITIER D'HELICE TRANSMISSION1

REF. NO.	PART NO. N° PIECES	DESCRIPTION DESCRIPTION	ET	ET1				REMARKS REMARQUES
16	93106–09014	OIL SEAL JOINT SPY	1	1				
17	97E95–06516	BOLT, HEXAGON W/W DEEP RECESS VIS HEXAGONAL AVC RONDELLE	2	2				
18	6E5–45378–00	NIPPLE, HOSE RACCORD, TUYAU	1	1				
19	90445–07ME8	HOSE (L80) DURITE (L80)	1	1				
20	6E5–83558–10	END, NIPPLE RACCORD DE NIPPLE	1	1				
21	90465–11M10	CLAMP BRIDE	2	2				
22	6CJ–44311–00	HOUSING, WATER PUMP CORPS, POMPE A EAU	1	1				
23	63D–44322–00	INSERT, CARTRIDGE CUVETTE	1	1				
24	6CJ–44315–00	GASKET, WATER PUMP JOINT, POMPE A EAU	1	1				
25	63D–44312–00	COVER, WATER PUMP HOUSING COUVERCLE	1	1				
26	663–44366–01	DAMPER, WATER SEAL 2 JOINT, TUBE D'EAU 2	1	1				
27	6H3–44352–00	IMPELLER TURBINE	1	1				
28	90280–03M03	KEY, WOODRUFF CLAVETTE, DEMI-LUNE	1	1				
29	6CJ–44341–00–CA	HOUSING, WATER PUMP CORPS, POMPE A EAU	1	1				
30	93101–23070	OIL SEAL JOINT SPY	2	2				
31	93450–40165	CIRCLIP CIRCLIP	1	1				
32	93210–46044	O-RING JOINT TORIQUE	1	1				
33	6CJ–44316–00	GASKET, WATER PUMP JOINT, POMPE A EAU	1	1				
34	6CJ–44323–00	OUTER PLATE, CARTRIDGE PLAQUE EXTERIEURE	1	1				
35	6CJ–44324–00	GASKET, CARTRIDGE JOINT	1	1				
36	93604–10M03	PIN, DOWEL CLAVETTE	2	2				
37	90119–08194	BOLT, WITH WASHER BOULON, AVEC RONDELLE	2	2				
38	90119–08191	BOLT, WITH WASHER BOULON, AVEC RONDELLE	2	2				
39	64J–45501–30	DRIVE SHAFT COMP. ARBRE MOTEUR COMP.	1	1				
40	6CJ–45551–00	PINION (12T) PIGNON D'ATTAQUE (12D)	1	1				
41	90170–16M01	NUT ECROU	1	1				
42	6CJ–45560–00	GEAR 1 (28T) PIGNON 1 (28T)	1	1				

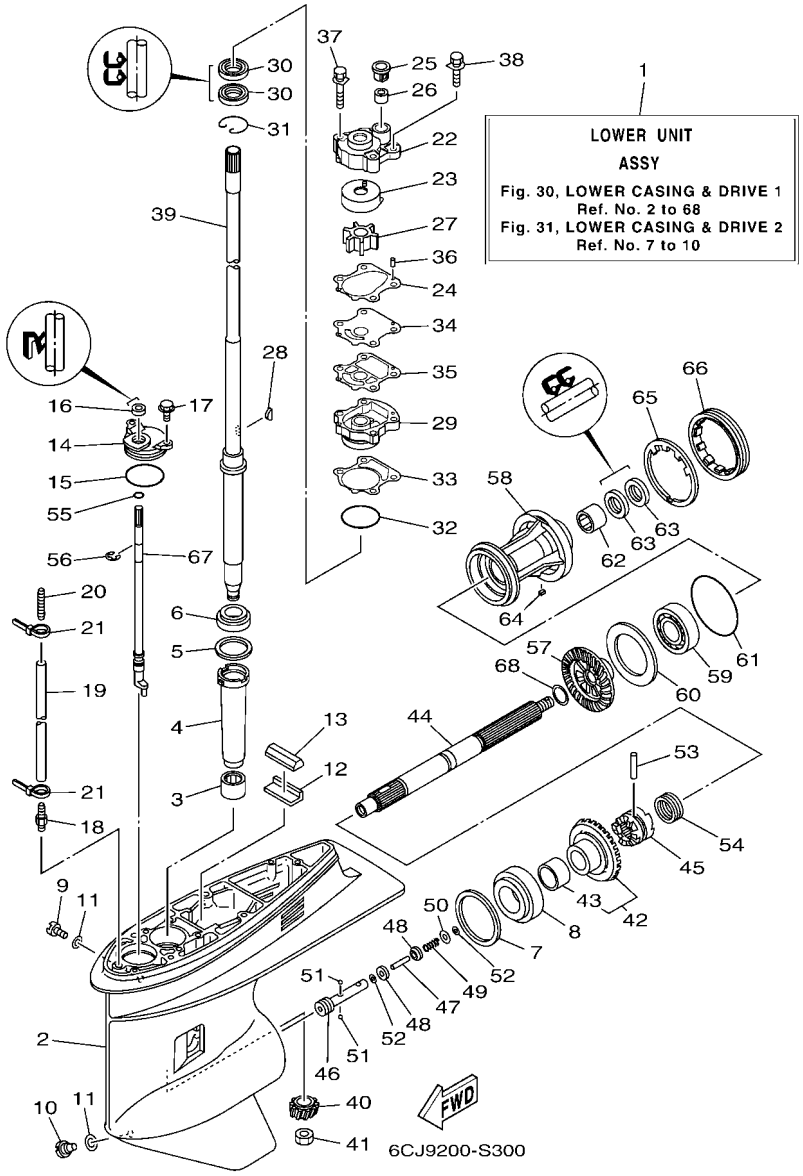

FIG. 30 LOWER CASING & DRIVE 1 — BOITIER D'HELICE TRANSMISSION1

REF. NO.	PART NO. N° PIECES	DESCRIPTION DESCRIPTION	ET	ET1				REMARKS REMARQUES
43	93317–322V0	.BEARING .ROULEMENT	1	1				
44	67F–45611–01	SHAFT, PROPELLER ARBRE, HELICE	1	1				
45	6D8–45631–00	CLUTCH, DOG CRABOT	1	1				
46	67F–45634–00	SLIDE, SHIFT CONTRE-POUSSOIR	1	1				
47	6H1–45668–00	SHAFT, FREE 1 AXE 1	1	1				
48	6H1–45635–00	PLUNGER, SHIFT POUSSOIR D'EMBRAYAGE	2	2				
49	90501–12M48	SPRING, COMPRESSION RESSORT, COMPRESSION	1	1				
50	90201–03313	WASHER, PLATE RONDELLE, PLATE	1	1				
51	93503–16003	BALL BILLES	2	2				
52	90183–02M03	NUT, SPRING ECROU, RESSORT	2	2				
53	90250–07M02	PIN, STRAIGHT GOUPILLE, DROITE	1	1				
54	688–45633–00	RING, CROSS PIN JONC, GOUPILLE CRABOT	1	1				
55	93210–07003	O-RING JOINT TORIQUE	1	1				
56	99001–08600	CIRCLIP CIRCLIP	1	1				
57	68S–45571–00	GEAR 2 (28T) PIGNON 2 (28T)	1	1				
58	67F–45331–00–CA	HOUSING, BEARING FLASQUE, ROULEMENT	1	1				
59	93306–207U0	BEARING ROULEMENT	1	1				
60	67F–45576–00	WASHER, THRUST 2 RONDELLE DE CALAGE 2	1	1				
61	93210–86M39	O-RING JOINT TORIQUE	1	1				
62	93317–325U0	BEARING ROULEMENT	1	1				
63	93101–25M03	OIL SEAL JOINT SPY	2	2				
64	90282–04010	KEY, STRAIGHT CLAVETTE, DROITE	1	1				
65	688–45383–02	WASHER, CLAW FREIN D'ECROU	1	1				
66	688–45384–02	NUT ECROU	1	1				
67	64J–44150–01	SHIFT CAM ASSY CAME D'INVERSION	1	1				
68	90201–25M05	WASHER, PLATE RONDELLE, PLATE	1	1				

FIG. 31 LOWER CASING & DRIVE 2 — BOITIER D'HELICE TRANSMISSION2

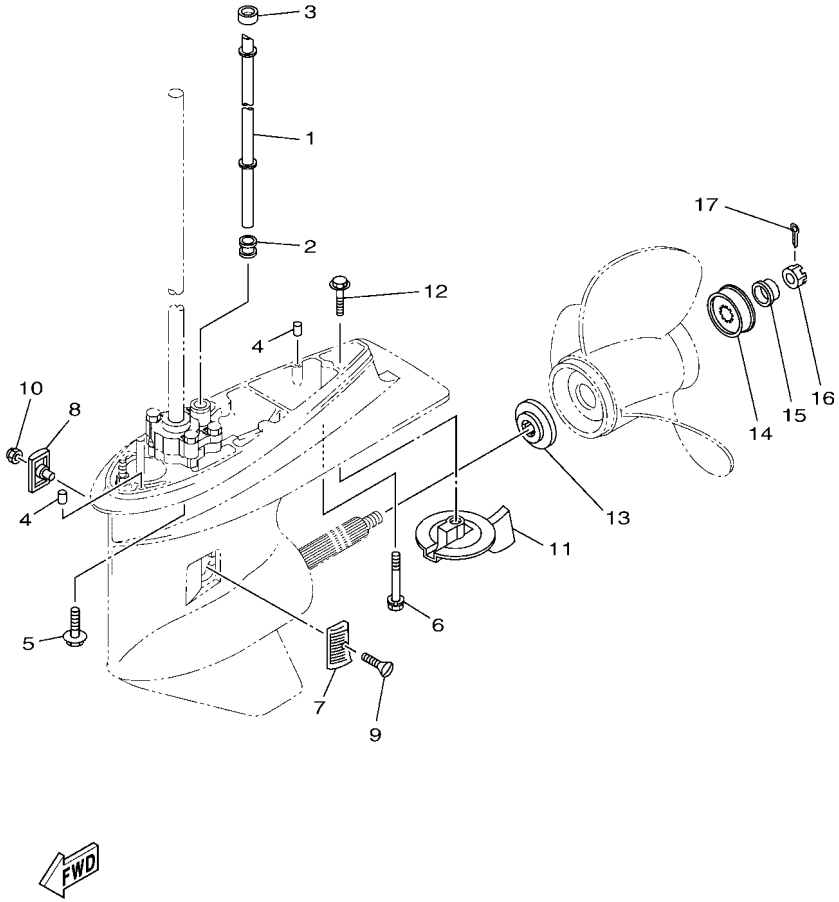

REF. NO.	PART NO. N° PIECES	DESCRIPTION DESCRIPTION	ET	ET1				REMARKS REMARQUES
1	6CJ–44361–00	TUBE, WATER 1 TUBE D'EAU 1	1	1				
2	663–44367–01	DAMPER, WATER SEAL 3 JOINT TUBE D'EAU 3	1	1				
3	663–44366–01	DAMPER, WATER SEAL 2 JOINT, TUBE D'EAU 2	1	1				
4	93606–12019	PIN, DOWEL GOUPILLE	2	2				
5	90119–10068	BOLT, WITH WASHER BOULON, AVEC RONDELLE	4	4				
6	90119–08195	BOLT, WITH WASHER BOULON, AVEC RONDELLE	1	1				
7	6H1–45214–00	COVER, WATER INLET 1 GRILLE, ENTREE D'EAU 1	1	1				
8	6H1–45215–00	COVER, WATER INLET 2 GRILLE, ENTREE D'EAU 2	1	1				
9	90151–05M00	SCREW, COUNTERSUNK VIS, TETE NOYEE	1	1				
10	90185–05002	NUT, NYLON ECROU,AUTO-BLOQUANT	1	1				
11	67F–45371–00	TAB-TRIM ANODE DERIVE	1	1				
12	90105–10M67	BOLT, FLANGE BOULON, A COLLERETTE	1	1				
13	688–45987–01	SPACER 1 ENTRETOISE 1	1	1				
14	67F–45997–00	SPACER 2 ENTRETOISE 2	1	1				
15	90389–25M00	BUSH DOUILLE	1	1				
16	90171–16011	NUT, CASTLE ECROU, CRENELE	1	1				
17	91490–30025	PIN. COTTER GOUPILLE	1	1				

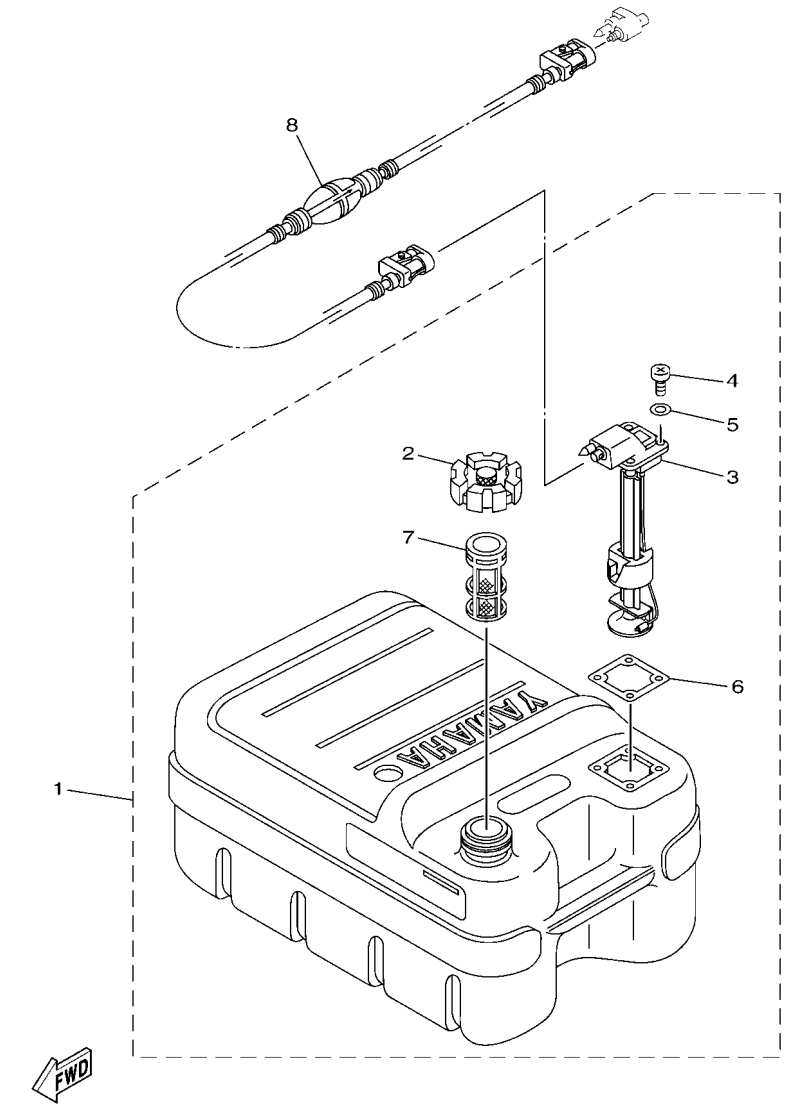

6CAD300-U280

FIG. 32 FUEL TANK — RESERVOIR A CARBURANT

REF. NO.	PART NO. N° PIECES	DESCRIPTION DESCRIPTION	ET	ET1				REMARKS REMARQUES
1	6YJ–24201–31	FUEL TANK ASSY (24L) RESERVOIR A ESSENCE (ENS.):24L	1	1				AP AP
2	6YJ–24610–01	.CAP ASSY .BOUCHON	1	1				
3	6Y1–24260–30	.FUEL METER ASSY .INDICATEUR DE CARBURANT	1	1				WITH INDICATOR WITH INDICATOR
4	90157–05M19	.SCREW, PAN HEAD .VIS, TETE TRONCONIQUE	4	4				
5	6Y1–24329–00	.SEAL .JOINT	4	4				
6	6Y1–24268–01	.GASKET, FUEL METER .JOINT, JAUGE A CARBURANT	1	1				
7	6YJ–24167–00	.STRAINER .FILTRE	1	1				
8	6YL–24306–54	FUEL PIPE COMP. 1 DURITE A ESSENCE 1	1	1				AP AP

FIG. 33 STEERING GUIDE — FIXATION DE DIRECTION

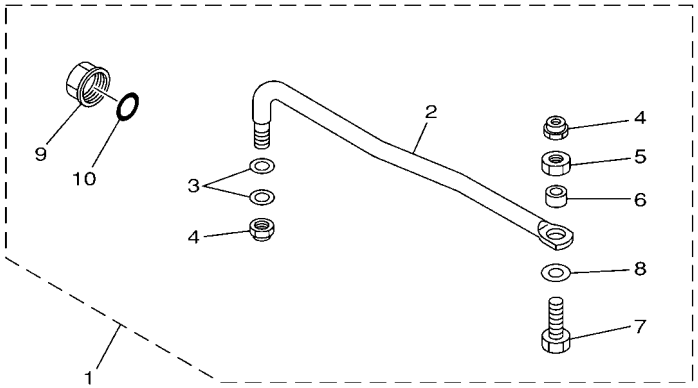

65W0010-8210

REF. NO.	PART NO. N° PIECES	DESCRIPTION DESCRIPTION	ET	ET1				REMARKS REMARQUES
1	65W–61350–00	STEERING GUIDE ATTACHMENT KIT FIXATIONS DE DIRECTION	1	1				AP AP
2	65W–61351–00	.ROD, STEERING LINK .RENVOI DE DIRECTION	1	1				
3	90201–10M20	.WASHER, PLATE .RONDELLE, PLATE	2	2				
4	90185–09M01	.NUT, SELF-LOCKING .ECROU,AUTO-BLOQUANT	2	2				
5	90170–09M03	.NUT .ECROU	1	1				
6	90387–10M42	.COLLAR .COLLERETTE	1	1				
7	90101–09M01	.BOLT .BOULON	1	1				
8	90201–10081	.WASHER, PLATE .RONDELLE, PLATE	1	1				
9	6E5–43145–01	.CAP, CLAMP BRACKET .CAPUCHON, PRESSE	1	1				
10	93210–16275	.O-RING .JOINT TORIQUE	1	1				

FIG. 34 OPTIONAL PARTS 1 — PIECES OPTIONNELLES 1

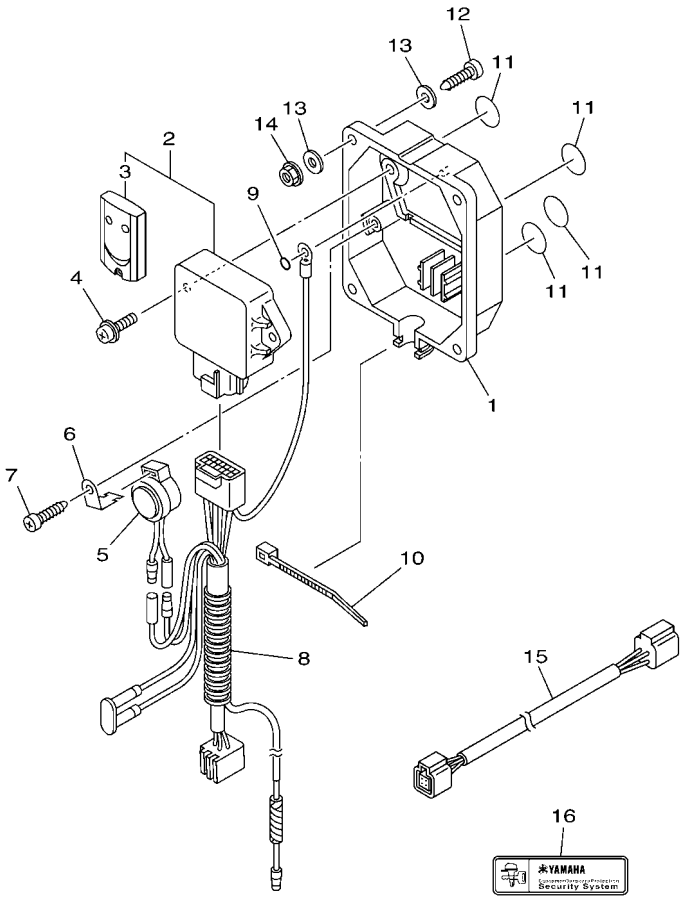

6CJ1100-K370

REF. NO.	PART NO. N° PIECES	DESCRIPTION DESCRIPTION	ET	ET1				REMARKS REMARQUES
1	6Y8–86267–00	CASE COMPLETE 1 CARTER (ENS.) 1	1	1				
2	6Y8–86260–03	REMOTE CONTROL UNIT ASSY UNITE DE TELECOMMANDE (ENS.)	1	1				
3	6AA–86261–01	.XMTR. COMP. .XMTR. COMP.	2	2				
4	97980–06216	SCREW, WITH WASHER VIS, AVEC RONDELLE	2	2				
5	6X4–83383–00	BUZZER RONFLEUR	1	1				
6	6X4–83386–00	STAY, BUZZER SUPPOR, RONFLEUR	1	1				
7	97780–60620	SCREW, TAPPING VIS, TETE BOMBEE	1	1				
8	6Y8–82509–10	WIRE, SUB LEAD FIL, SECONDAIRE	1	1				
9	93210–04279	O-RING JOINT TORIQUE	1	1				
10	90465–11M10	CLAMP BRIDE	1	1				
11	6Y8–8454G–00	PATCH 1 TAMPON 1	4	4				
12	90167–06M00	SCREW, TAPPING VIS, TETE FRAISEE	4	4				UR UR
	97880–06035	SCREW, PAN HEAD VIS, TETE TRONCONIQUE	4	4				UR UR
13	90201–06M30	WASHER, PLATE RONDELLE, PLATE	8	8				
14	95780–06300	NUT, FLANGE ECROU	4	4				
15	6Y8–82521–11	2FT PIGTAIL BUS FAISCEAU (L: 2FT.)	1	1				
16	6Y8–48277–00	STICKER 1 ETIQUETTE 1	4	4				

FIG. 35 OPTIONAL PARTS 2 — PIECES OPTIONNELLES 2

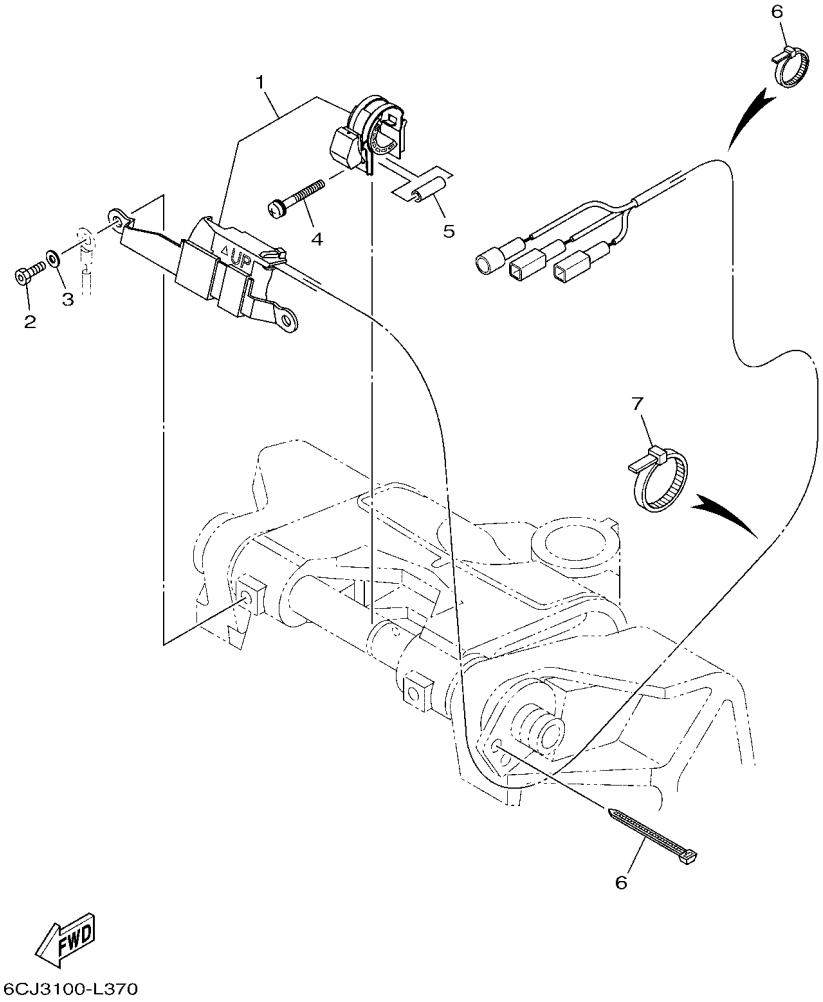

REF. NO.	PART NO. N° PIECES	DESCRIPTION DESCRIPTION	ET	ET1				REMARKS REMARQUES
1	6C5–825E0–01	TILT LIMIT SWITCH ASSY COMMUTATEUR, LIMIT INCLINAISON	1	1				
2	90109–06M88	BOLT BOULON	2	2				
3	92990–06100	WASHER, SPRING RONDELLE, GROWER	2	2				
4	90159–05059	SCREW, WITH WASHER VIS, AVEC RONDELLE	1	1				
5	90387–05004	COLLAR COLLERETTE	1	1				
6	90465–11M10	CLAMP BRIDE	5	5				
7	90465–13M18	CLAMP BRIDE	3	3				

FIG. 36 REPAIR KIT 1 — KITS DE REPARATION 1

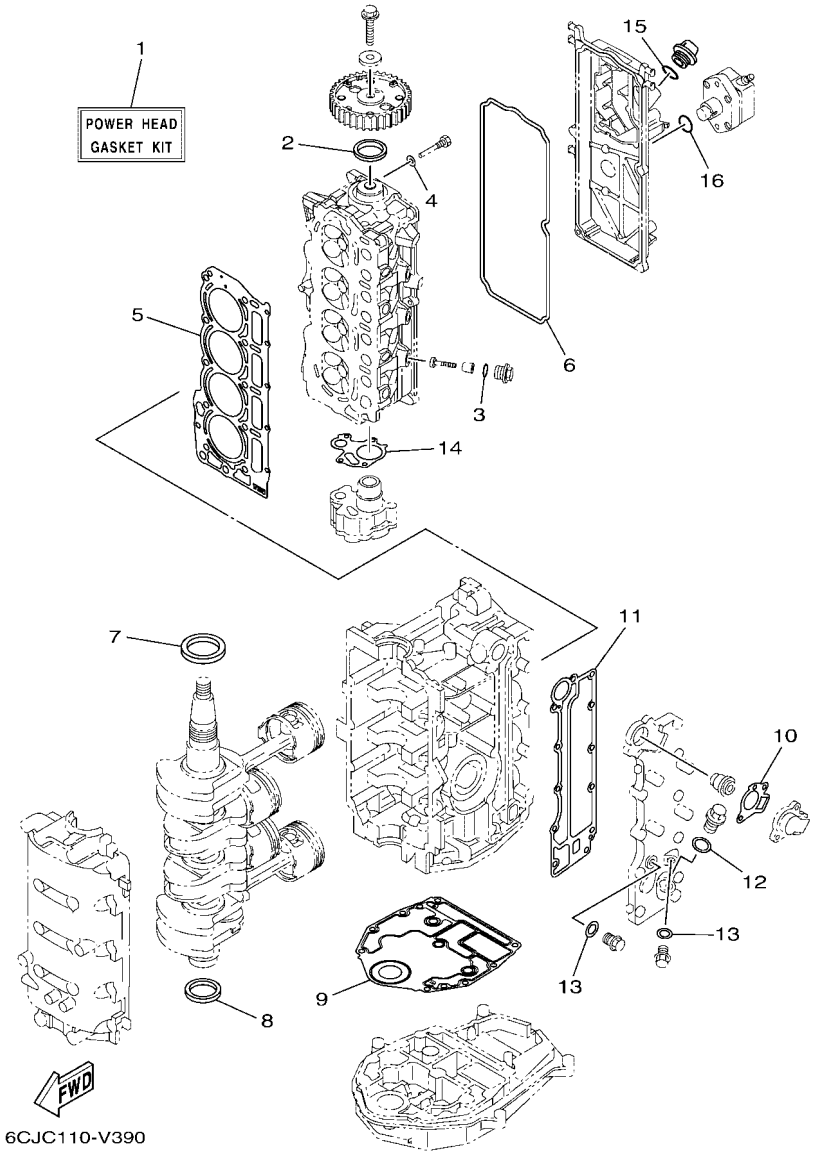

REF. NO.	PART NO. N° PIECES	DESCRIPTION DESCRIPTION	ET	ET1				REMARKS REMARQUES
1	6CJ–W0001–02	POWER HEAD GASKET KIT POCHETTE DE JINTS TETE MOTRICE	1	1				
2	93102–37M40	.OIL SEAL .JOINT SPY	1	1				
3	93210–13M63	.O-RING .JOINT TORIQUE	3	3				
4	90430–06014	.GASKET .JOINT	1	1				
5	6CJ–11181–00	.GASKET, CYLINDER HEAD 1 .JOINT, DE CULASSE 1	1	1				
6	6CJ–11356–00	.SEAL, CYLINDER 2 .JOINT, SPY CYLINDRE	1	1				
7	93102–43004	.OIL SEAL .JOINT SPY	1	1				
8	93101–35002	.OIL SEAL .JOINT SPY	1	1				
9	6BG–11351–01	.GASKET, CYLINDER .JOINT, D'EMBASE	1	1				
10	62Y–12414–00	.GASKET, COVER .JOINT, COUVERCLE	1	1				
11	6C5–41114–10	.GASKET, EXHAUST OUTER COVER .JOINT, COUVERCLE D'ECHAPPEMENT	1	1				
12	90201–186F1	.WASHER, PLATE .RONDELLE, PLATE	1	1				
13	90430–14115	.GASKET .JOINT	2	2				
14	6C5–13329–00	.GASKET, PUMP COVER .JOINT, COUVERCLE DE POMPE	1	1				
15	93210–24M79	.O-RING .JOINT TORIQUE	1	1				
16	93210–24M79	.O-RING .JOINT TORIQUE	1	1				

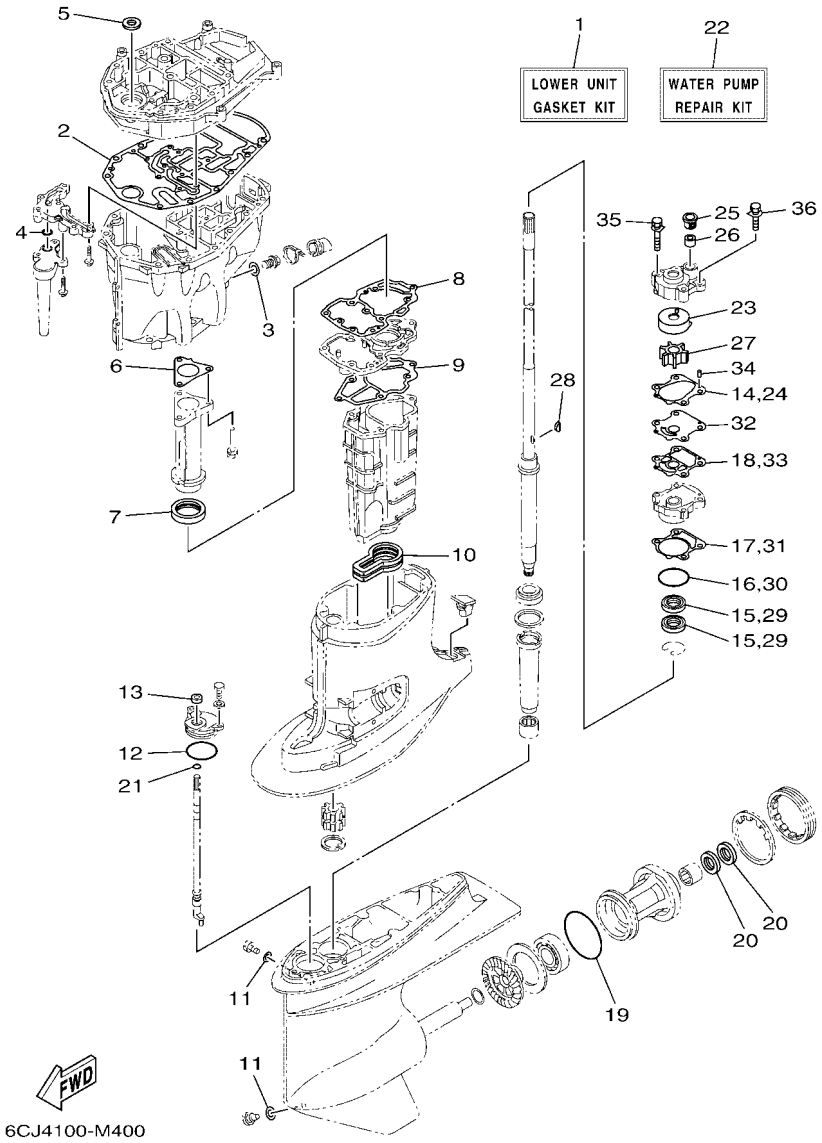

FIG. 37 REPAIR KIT 2 — KITS DE REPARATION 2

REF. NO.	PART NO. N° PIECES	DESCRIPTION DESCRIPTION	ET	ET1				REMARKS REMARQUES
1	6CJ–W0001–21	LOWER UNIT GASKET KIT POCHETTE DE JOINTS EMBASE	1	1				
2	6C5–15312–01	.GASKET, OIL PAN .JOINT DE VENTILATEUR D'HUILE	1	1				
3	90430–14M09	.GASKET .JOINT	1	1				
4	93210–12790	.O-RING .JOINT TORIQUE	1	1				
5	93103–18011	.OIL SEAL .JOINT SPY	1	1				
6	6C5–41133–00	.GASKET, EXHAUST MANIFOLD 1 .JOINT, PIPE D'ECHAPPEMENT	1	1				
7	6C5–46132–00	.GASKET 1 .JOINT 1	1	1				
8	6C5–41134–00	.GASKET, EXHAUST MANIFOLD .JOINT, PIPE D'ECHAPPEMENT	1	1				
9	6C5–41135–00	.GASKET, EXHAUST MANIFOLD .JOINT, PIPE D'ECHAPPEMENT	1	1				
10	6C5–45123–00	.GASKET, MUFFLER .JOINT, POT DE DETENTE	1	1				
11	90430–08003	.GASKET .JOINT	2	2				
12	93210–49046	.O-RING .JOINT TORIQUE	1	1				
13	93106–09014	.OIL SEAL .JOINT SPY	1	1				
14	6CJ–44315–00	.GASKET, WATER PUMP .JOINT, POMPE A EAU	1	1				
15	93101–23070	.OIL SEAL .JOINT SPY	2	2				
16	93210–46044	.O-RING .JOINT TORIQUE	1	1				
17	6CJ–44316–00	.GASKET, WATER PUMP .JOINT, POMPE A EAU	1	1				
18	6CJ–44324–00	.GASKET, CARTRIDGE .JOINT	1	1				
19	93210–86M39	.O-RING .JOINT TORIQUE	1	1				
20	93101–25M03	.OIL SEAL .JOINT SPY	2	2				
21	93210–07003	.O-RING .JOINT TORIQUE	1	1				
22	6CJ–W0078–01	WATER PUMP REPAIR KIT KIT DE REPARATION DE LA POMPE	1	1				
23	63D–44322–00	.INSERT, CARTRIDGE .CUVETTE	1	1				
24	6CJ–44315–00	.GASKET, WATER PUMP .JOINT, POMPE A EAU	1	1				
25	63D–44312–00	.COVER, WATER PUMP HOUSING .COUVERCLE	1	1				
26	663–44366–01	.DAMPER, WATER SEAL 2 .JOINT, TUBE D'EAU 2	1	1				
27	6H3–44352–00	.IMPELLER .TURBINE	1	1				

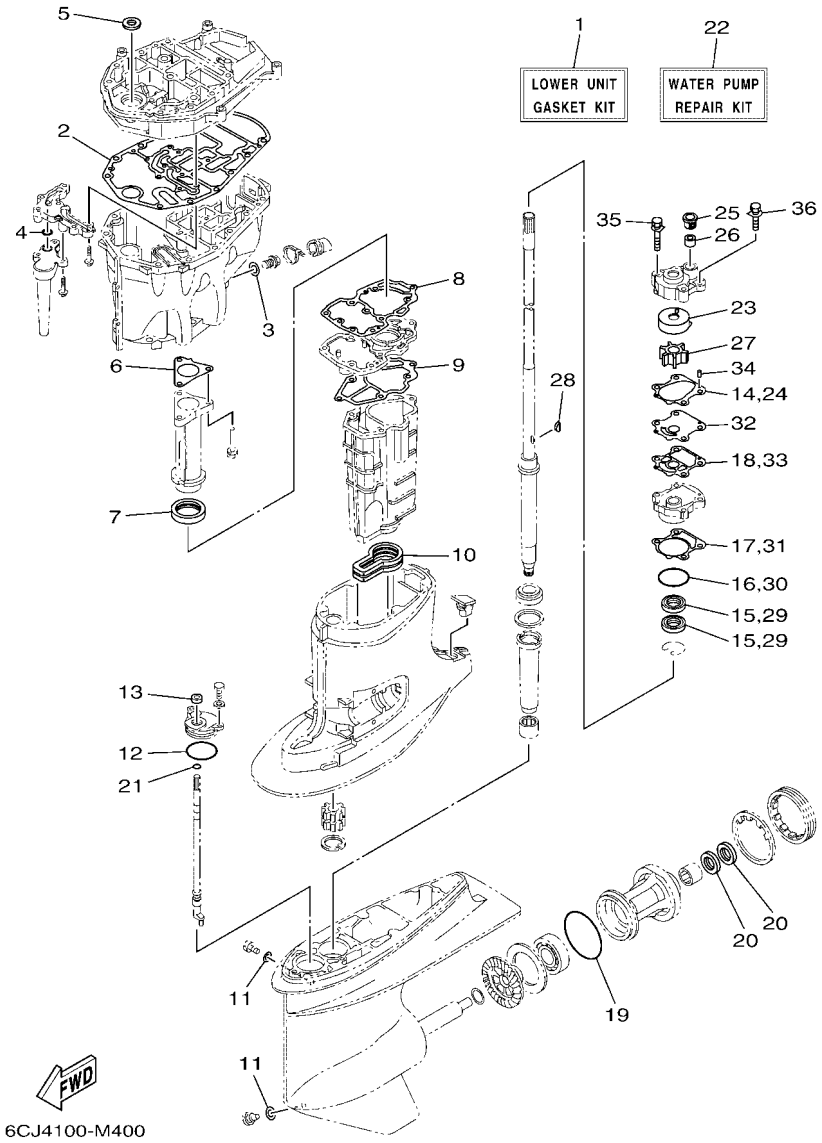

FIG. 37 REPAIR KIT 2 — KITS DE REPARATION 2

REF. NO.	PART NO. N° PIECES	DESCRIPTION DESCRIPTION	ET	ET1				REMARKS REMARQUES
28	90280–03M03	.KEY, WOODRUFF .CLAVETTE, DEMI-LUNE	1	1				
29	93101–23070	.OIL SEAL .JOINT SPY	2	2				
30	93210–46044	.O-RING .JOINT TORIQUE	1	1				
31	6CJ–44316–00	.GASKET, WATER PUMP .JOINT, POMPE A EAU	1	1				
32	6CJ–44323–00	.OUTER PLATE, CARTRIDGE .PLAQUE EXTERIEURE	1	1				
33	6CJ–44324–00	.GASKET, CARTRIDGE .JOINT	1	1				
34	93604–10M03	.PIN, DOWEL .CLAVETTE	2	2				
35	90119–08194	.BOLT, WITH WASHER .BOULON, AVEC RONDELLE	2	2				
36	90119–08191	.BOLT, WITH WASHER .BOULON, AVEC RONDELLE	2	2				

NUMERICAL INDEX
INDEX NUMERIQUE

PART NO. N° PIECES	REF. NO.
6CJ–11111–10–9S	6 – 2
62Y–11119–00	19 – 8
6CJ–11119–00	6 – 19
6AH–11133–10	6 – 3
6C5–11168–00	6 – 15
6CJ–11181–00	6 – 10
	36 – 5
6CJ–11191–00–9S	6 – 14
6CJ–11192–00	6 – 21
6G8–11197–A0	6 – 6
62Y–11325–00	1 – 3
	4 – 17
6G8–11325–00	1 – 5
	6 – 4
66M–11327–00–94	4 – 19
66M–11328–01	4 – 18
6BG–11351–01	4 – 7
	36 – 9
6CJ–11356–00	6 – 17
	36 – 6
6CJ–11372–00	10 – 3
6C5–11411–10	5 – 1
6BG–11416–00	5 – 2
6BG–11416–10	5 – 2
6BG–11416–20	5 – 2
6BG–11416–30	5 – 2
6C5–11536–00	13 – 7
6C5–11537–10	13 – 2
6H4–11545–00	15 – 10
62Y–11557–00	13 – 8
67C–11603–01	5 – 7
67C–11604–01	5 – 7
67C–11605–01	5 – 7
6CJ–11631–00–96	5 – 6
62Y–11633–00	5 – 8
6CJ–11635–00	5 – 6
6CJ–11636–00	5 – 6
6C5–11650–10	5 – 3
6C5–11654–00	5 – 4
6CJ–11656–00	5 – 5
6CJ–11656–10	5 – 5
6CJ–11656–20	5 – 5
6CJ–11656–30	5 – 5
6CJ–12111–00	7 – 1
6CJ–12113–00	7 – 4
6CJ–12116–00	7 – 3
3LD–12117–00	7 – 5
3LD–12118–00	7 – 6

PART NO. N° PIECES	REF. NO.
51Y–12119–00	7 – 7
6CJ–12121–10	7 – 2
6CJ–12146–00	7 – 8
6CJ–12151–00	7 – 9
62Y–12158–00	7 – 14
6C5–12158–00	7 – 11
64J–12159–00	7 – 13
6C5–12159–00	7 – 10
6CJ–12161–00	7 – 12
6CJ–12171–01	13 – 1
6CJ–12231–00	7 – 15
6CJ–12233–00	7 – 16
6G8–12411–03	1 – 1
	4 – 11
688–12412–00	4 – 12
6C5–12413–00–9S	4 – 13
62Y–12414–00	1 – 2
	4 – 14
	36 – 10
6BG–12481–00	22 – 14
62Y–12481–10	4 – 10
66M–12535–00	4 – 20
6AW–12572–00	22 – 6
6CJ–12576–00	10 – 7
6R3–12580–00	22 – 8
6C5–12858–A0	4 – 28
6CJ–13131–00	14 – 30
6C5–13161–00	8 – 10
6CJ–13300–00	13 – 11
6C5–13329–00	13 – 12
	36 – 14
6CJ–13411–10	29 – 8
6CJ–13428–00	9 – 17
6C5–13437–64	15 – 23
5GH–13440–80	1 – 4
	4 – 27
6C5–13542–00	12 – 3
6CJ–13543–00	10 – 5
6BG–13545–00	12 – 19
6CJ–13546–00	12 – 2
6C5–13547–00	12 – 23
6C5–13557–00	8 – 4
6C5–13577–00	12 – 11
6C5–13593–01	11 – 20
6CJ–13641–01	8 – 2
6C5–13645–00	8 – 3
6C5–13713–02	10 – 1
6C5–13716–00	11 – 22

PART NO. N° PIECES	REF. NO.
6C5–13739–00	12 – 1
6CJ–13750–01	8 – 5
6C5–13761–00	8 – 13
6C5–13781–00	11 – 21
6C5–13906–02	11 – 9
6C5–13907–00	11 – 17
6C5–13910–10	11 – 16
6C5–13915–00	1 – 7
	11 – 18
6CJ–13974–10	12 – 16
6C5–1410B–00	8 – 14
6C5–1410F–00	12 – 22
6C5–14127–10	11 – 19
6C5–14148–00	12 – 14
6BG–14149–00	12 – 9
6CJ–14180–04	11 – 1
6C5–14182–20	11 – 2
6C5–14191–00	11 – 13
6CJ–14200–02	8 – 1
6C5–14225–00	11 – 25
6C5–14251–00	12 – 13
6C5–14386–00	11 – 5
6C5–14397–00	11 – 14
6C5–14440–10	9 – 4
6C5–14446–00	8 – 12
6C1–14453–02	9 – 5
6CY–14477–00	9 – 6
6C5–14496–00	8 – 9
6C5–14546–10	11 – 4
6C5–14567–00	11 – 15
6CJ–14711–01	28 – 12
6C5–14960–20	11 – 12
6C5–14984–10	1 – 8
	11 – 23
6C5–14985–00	11 – 3
6CJ–15100–01	4 – 2
6C5–15311–02	29 – 1
6C5–15312–01	29 – 2
	37 – 2
6CJ–15316–01	29 – 4
6CJ–1531A–00	10 – 12
6CJ–15333–10	29 – 10
6C5–15362–00	29 – 12
6G8–15363–00	6 – 23
6C5–15378–00	9 – 19
6C5–15378–11	9 – 21
6C5–21337–10	11 – 24
6C5–21841–01	12 – 12

PART NO. N° PIECES	REF. NO.
6C5–22435–00	26 – 20
6CJ–22471–10	26 – 13
6CJ–24135–00	22 – 21
6BG–24136–01	22 – 19
6YJ–24167–00	32 – 7
6YJ–24201–31	32 – 1
6C5–24251–00	1 – 9
6C5–24251–01	12 – 20
6Y1–24260–30	32 – 3
6Y1–24268–01	32 – 6
6G1–24304–10	14 – 1
6YL–24306–54	32 – 8
6BG–24311–00	14 – 24
6BG–24313–00	14 – 3
6CJ–24321–00	12 – 4
6C5–24322–00	12 – 5
6CJ–24323–00	12 – 6
6CJ–24324–00	12 – 7
6CJ–24325–00	12 – 8
6Y1–24329–00	32 – 5
6BG–24329–01	21 – 25
6CJ–24374–00	14 – 35
67F–24377–00	14 – 4
688–24378–00	22 – 10
	22 – 13
6C5–24379–00	12 – 18
6BG–24387–00	12 – 15
6CJ–24410–01	14 – 26
62Y–24411–03	14 – 28
6CJ–24415–00	14 – 27
6C5–2441R–10	11 – 6
6C5–2441T–10	11 – 7
62Y–24423–00	14 – 29
6C5–24444–00	12 – 10
62Y–24444–01	14 – 32
6C5–24453–00	11 – 8
6CJ–24454–00	14 – 31
6D8–24469–00	14 – 18
6C5–24471–01	14 – 33
6D8–24519–00	14 – 19
6CJ–2451B–00	12 – 21
6D8–24560–01	14 – 14
6D8–24562–00	14 – 17
6D8–24563–00	1 – 10
	14 – 15
6D8–24564–00	1 – 11
	14 – 16
6CJ–24566–00	14 – 21

PART NO. N° PIECES	REF. NO.
6C5–24592–00	11 – 10
6YJ–24610–01	32 – 2
6CJ–28100–01	14 – 39
67F–2812A–00	15 – 7
6C1–28199–7L–D0	14 – 40
6C1–28199–7L–E0	14 – 40
6C1–28199–7L–F0	14 – 40
6C1–28199–7L–G0	14 – 40
6C1–28199–7L–H0	14 – 40
6C1–28199–7L–S0	14 – 40
6C1–28199–8L–K0	14 – 41
6C1–28199–8L–L0	14 – 41
6C1–28199–8L–M0	14 – 41
6C1–28199–8L–N0	14 – 41
6C1–28199–8L–P0	14 – 41
6C1–28199–8L–R0	14 – 41
6C5–41113–11–9S	4 – 8
6C5–41114–10	4 – 15
	36 – 11
6C5–41131–00–CA	28 – 5
6C5–41133–00	28 – 4
	37 – 6
6C5–41134–00	28 – 8
	37 – 8
6C5–41135–00	28 – 11
	37 – 9
6C5–41137–03	28 – 1
688–41211–01	23 – 21
6H4–41237–00	23 – 22
62Y–42154–A0	23 – 24
6C5–42171–00	23 – 25
6BG–42335–A0	23 – 30
6BG–42384–00	22 – 3
69W–42510–01–8D	25 – 1
6CY–42610–03	2 – 1
6CY–42610–21	3 – 1
6CJ–42615–00	2 – 9
	3 – 9
6BG–42617–00	15 – 20
6CJ–4261A–01	2 – 2
6CY–4261A–21	3 – 2
6BG–42649–00	2 – 12
	3 – 12
6BG–42651–00	2 – 3
	3 – 3
6BG–42652–00	2 – 6
	3 – 6
6BG–42662–01	2 – 10

PART NO. N° PIECES	REF. NO.
6BG–42662–01	3 – 10
6CJ–42675–00	2 – 15
6CJ–42675–10	3 – 15
6CJ–42676–00	2 – 16
6CJ–42676–10	3 – 16
6BG–42677–00	2 – 13
6BG–42677–20	3 – 13
6BG–42678–20	2 – 14
6BG–42678–30	3 – 14
6D6–42681–00	3 – 17
6AH–42697–10	2 – 11
	3 – 11
6CJ–42710–02–8D	21 – 1
62Y–42715–01	23 – 8
62Y–42716–01	21 – 6
61A–42717–00	21 – 8
65W–42717–00	21 – 7
6BG–42724–01	22 – 2
6CJ–42725–01	21 – 10
6CJ–42726–10	21 – 11
6H1–42726–31	22 – 1
68U–42727–01	21 – 24
6BG–42727–01	21 – 12
6BG–42741–10–8D	21 – 26
6BG–42748–01	21 – 4
6H4–42748–01	21 – 2
63P–42756–00	18 – 24
6BG–42761–00	21 – 9
6EE–42794–40	21 – 39
6EE–42794–50	21 – 40
6BG–42811–01	18 – 21
6BG–42815–00–8D	21 – 14
6BG–42816–00	21 – 19
6BG–42851–00	2 – 5
	3 – 5
6C5–43111–10–8D	24 – 1
6C5–43112–01–8D	24 – 3
6E5–43126–02	24 – 27
6C5–43131–00	24 – 12
66T–43144–00	21 – 21
6G5–43144–00	24 – 24
6E5–43145–01	33 – 9
6G5–43148–00	24 – 20
6C5–43181–00	24 – 15
6C5–43185–00	24 – 16
6C5–43311–01–8D	24 – 10
6CJ–43800–13	26 – 1
6CJ–43801–10	26 – 3

NUMERICAL INDEX
INDEX NUMERIQUE

PART NO. N° PIECES	REF. NO.
6CJ–43804–11	27 – 3
6CJ–43805–11	27 – 2
6EK–4380F–00	27 – 6
6C5–4380G–00	26 – 26
6CJ–4380K–12	26 – 22
6CJ–4380R–10	26 – 8
6CJ–43810–10	26 – 2
6C5–43816–00	26 – 25
6C5–43817–10	26 – 23
6CJ–43818–00	24 – 31
6CJ–4381B–10	26 – 17
6CJ–43821–10	26 – 5
62Y–43822–00	26 – 4
6CJ–43829–10	26 – 61
6EK–4382E–00	26 – 35
6D8–4382L–00	26 – 50
6CJ–43830–10	26 – 28
6C5–43831–00	26 – 62
6C5–43833–00	24 – 32
6C5–43834–00	24 – 33
6D8–43841–00	26 – 29
6D8–43843–00	26 – 45
6D8–43844–00	26 – 44
6H1–43844–10	26 – 48
6CJ–43845–10	26 – 59
69A–4384F–00	26 – 33
6H1–4384G–11	26 – 47
62X–4384H–00	26 – 19
6D8–4384M–00	26 – 32
6D8–43851–00	26 – 40
6C6–43853–00	26 – 37
6C5–43854–00	26 – 52
6C5–43855–10	26 – 42
6C5–43856–10	26 – 49
6C5–43861–00	26 – 11
	26 – 15
6CJ–43861–10	26 – 60
6CJ–43862–11	27 – 12
6CJ–43863–00	26 – 7
	26 – 9
6D8–43863–00	26 – 57
62X–4386K–00	27 – 7
6C5–43871–00	26 – 12
6C5–43875–00	26 – 16
6H1–43875–00	26 – 58
6CJ–43879–10	27 – 8
6C6–4387G–00	26 – 36
6CJ–43880–13	27 – 1

PART NO. N° PIECES	REF. NO.
6CJ–43881–10	27 – 10
6EK–43882–00	27 – 11
6H1–43883–00	26 – 30
6C5–43885–01	25 – 19
6EK–43892–00	27 – 4
69J–43894–00	26 – 31
6C5–43895–00	26 – 51
6C5–43899–00	26 – 18
69J–4389J–00	26 – 24
	26 – 39
62Y–44117–01	23 – 2
62Y–44118–00–94	23 – 9
6C5–44120–03	23 – 5
69W–44121–00	23 – 1
688–44122–00	23 – 17
6C5–44122–00	23 – 6
62Y–44135–00	23 – 27
64J–44150–01	30 – 67
6C5–44194–00	25 – 14
6CJ–44311–00	30 – 22
63D–44312–00	30 – 25
	37 – 25
6CJ–44315–00	30 – 24
	37 – 14
	37 – 24
6CJ–44316–00	30 – 33
	37 – 17
	37 – 31
63D–44322–00	30 – 23
	37 – 23
6CJ–44323–00	30 – 34
	37 – 32
6CJ–44324–00	30 – 35
	37 – 18
	37 – 33
6CJ–44341–00–CA	30 – 29
6H3–44352–00	30 – 27
	37 – 27
6CJ–44361–00	31 – 1
663–44366–01	30 – 26
	31 – 3
	37 – 26
663–44367–01	31 – 2
6CJ–44385–00	25 – 36
6BL–44391–00	22 – 5
6CJ–44514–00	25 – 10
6CJ–44526–00	25 – 12
6CJ–44533–00	25 – 15

PART NO. N° PIECES	REF. NO.
6C5–44551–00–8D	25 – 17
6C5–44552–00–8D	25 – 20
69W–44555–00	25 – 21
6CJ–44575–00	25 – 23
6C5–45111–00–8D	28 – 22
6C5–45123–00	28 – 14
	37 – 10
6C5–45135–10	29 – 13
6C5–45136–10	29 – 14
6C5–45155–01	28 – 17
6CJ–45181–01	28 – 9
6H1–45214–00	31 – 7
6H1–45215–00	31 – 8
65W–45251–00	1 – 12
	1 – 13
	24 – 6
	24 – 8
	24 – 25
6CJ–45300–32–8D	30 – 1
67F–45301–00–8D	30 – 2
69W–45318–00	28 – 18
688–45321–00	30 – 14
67F–45331–00–CA	30 – 58
688–45341–10	30 – 10
67F–45371–00	1 – 16
	31 – 11
688–45375–00	30 – 13
663–45376–00	30 – 12
6E5–45378–00	30 – 18
688–45383–02	30 – 65
688–45384–02	30 – 66
64J–45501–30	30 – 39
688–45536–01	30 – 4
6CJ–45551–00	30 – 40
6CJ–45560–00	30 – 42
688–45567–01	30 – 7
688–45567–10	30 – 7
688–45567–20	30 – 7
688–45567–30	30 – 7
688–45567–40	30 – 7
688–45567–50	30 – 7
688–45567–60	30 – 7
68S–45571–00	30 – 57
67F–45576–00	30 – 60
688–45587–01	30 – 5
688–45587–10	30 – 5
688–45587–20	30 – 5
688–45587–30	30 – 5

PART NO. N° PIECES	REF. NO.
688–45587–40	30 – 5
688–45587–50	30 – 5
688–45587–60	30 – 5
67F–45611–01	30 – 44
6D8–45631–00	30 – 45
688–45633–00	30 – 54
67F–45634–00	30 – 46
6H1–45635–00	30 – 48
6H1–45668–00	30 – 47
688–45987–01	31 – 13
67F–45997–00	31 – 14
6C5–46132–00	28 – 6
	37 – 7
6C5–46241–00	13 – 6
6Y8–48277–00	34 – 16
69W–48344–00	23 – 20
	23 – 34
65W–48511–01	25 – 40
6BG–48538–00	21 – 37
65W–61350–00	33 – 1
65W–61351–00	33 – 2
6C5–81145–00	8 – 7
6C5–81146–10	8 – 15
68V–81315–01	16 – 19
6CJ–81337–11	15 – 1
6C5–81410–01	15 – 9
6C5–81450–00	15 – 8
6CJ–81800–01	20 – 1
69J–81801–11	20 – 5
67F–81807–00	20 – 10
67F–81808–00	20 – 8
67F–81809–00	20 – 19
67F–81810–00	20 – 3
67F–81813–00	20 – 6
6C5–81815–00	17 – 3
68F–81820–00	20 – 7
67F–81821–00	20 – 13
6CJ–81822–00	19 – 2
6K7–81826–11	20 – 24
69J–81828–00	20 – 25
6C5–8182L–00	8 – 8
67F–81830–00	20 – 17
67F–81832–00	20 – 11
67F–81836–00	20 – 12
6C5–81839–00	20 – 21
67F–8183R–00	20 – 15
60V–8183T–00	20 – 18
6P2–8183X–00	17 – 13

PART NO. N° PIECES	REF. NO.
69J–81840–11	20 – 4
67F–81841–00	20 – 14
60X–81842–00	20 – 20
67F–81846–00	20 – 26
67F–81850–00	20 – 2
67F–81857–00	20 – 9
6C5–81869–00	20 – 23
67F–81891–00	20 – 16
6CJ–81919–01	15 – 22
60V–81925–00	19 – 17
6C5–81941–00	20 – 22
6CJ–81942–00	16 – 23
6CJ–81948–01	17 – 5
68V–8194A–00	17 – 16
60E–81950–00	17 – 1
63P–81950–00	17 – 12
68F–81953–00	17 – 19
68V–81960–10	16 – 13
6EE–81994–40	15 – 26
6EE–81994–50	15 – 27
6EE–81995–40	15 – 24
6EE–81995–50	15 – 25
6AG–81996–00	15 – 28
6C5–82105–U2	19 – 1
6G5–82119–00	17 – 18
67C–82127–10	25 – 34
6E5–82148–00	24 – 4
67F–82151–00	18 – 7
5JJ–82151–10	18 – 11
67F–82151–10	18 – 9
67F–8215B–00	18 – 12
67F–8215B–10	18 – 8
67F–8215B–20	18 – 10
6CJ–82181–10	27 – 5
63P–82310–01	16 – 4
6C5–82316–01	16 – 10
6C5–82316–11	16 – 11
6A0–82317–01	9 – 8
	17 – 11
6CJ–82340–00	16 – 5
6C5–82388–10	16 – 20
64J–82504–00	16 – 22
6Y8–82509–10	34 – 8
6Y8–82521–11	34 – 15
6CJ–8253B–00	16 – 18
6CJ–82554–00	18 – 17
69J–82563–01	18 – 1
68F–82582–00	19 – 19

PART NO. N° PIECES	REF. NO.
6DA–82582–00	18 – 13
6DA–82582–10	18 – 14
69J–82587–01	18 – 5
6CJ–82588–00	16 – 17
61A–82588–01	18 – 18
6CJ–82590–13	18 – 6
60V–8259F–01	18 – 16
6C5–825E0–01	35 – 1
6X4–83383–00	34 – 5
6X4–83386–00	34 – 6
6E5–83558–00	25 – 38
6E5–83558–10	30 – 20
6CJ–83559–00	16 – 26
6BG–83614–00	18 – 2
62Y–83626–00	15 – 21
63D–83672–11	25 – 29
68F–83688–00	8 – 16
6Y8–8454G–00	34 – 11
69L–85516–01	11 – 27
6C5–85525–00	16 – 1
6CJ–85525–00	19 – 10
6CJ–85548–00	17 – 7
6C5–85561–00	15 – 14
62Y–85580–00	15 – 17
6CJ–85780–01	17 – 23
6CJ–85790–00	17 – 21
6C5–85885–00	8 – 6
6CJ–8591A–12	16 – 15
6BG–86112–10	9 – 14
6C5–86120–00	9 – 12
6Y8–86260–03	34 – 2
6AA–86261–01	34 – 3
6Y8–86267–00	34 – 1
6C5–87226–00	11 – 11
6CJ–W0001–02	36 – 1
6CJ–W0001–21	37 – 1
6CJ–W0078–01	1 – 17
	37 – 22
6CJ–W009A–02–9S	6 – 1
6CJ–W009B–04–9S	4 – 1
90101–06020	24 – 7
	24 – 9
	24 – 26
90101–06063	23 – 10
90101–09M01	33 – 7
90101–12063	24 – 36
90105–09009	6 – 12
90105–10M67	31 – 12

NUMERICAL INDEX
INDEX NUMERIQUE

PART NO. N° PIECES	REF. NO.
90109–06047	2 – 7
	3 – 7
90109–06M65	6 – 8
90109–06M80	21 – 29
90109–06M86	18 – 4
	18 – 23
	18 – 26
	21 – 13
	21 – 22
	21 – 33
	21 – 36
	21 – 38
	22 – 18
	22 – 20
	22 – 23
90109–06M88	35 – 2
90109–08229	25 – 11
90109–12MA3	25 – 24
90116–10063	25 – 7
90119–06025	13 – 13
90119–06261	28 – 7
90119–06289	17 – 10
90119–06291	9 – 11
	21 – 3
90119–06297	9 – 10
	23 – 29
90119–06304	9 – 3
90119–06MA5	4 – 16
90119–06MA6	6 – 13
90119–08094	25 – 22
90119–08154	4 – 4
90119–08182	28 – 15
90119–08190	9 – 2
90119–08191	30 – 38
	37 – 36
90119–08194	30 – 37
	37 – 35
90119–08195	31 – 6
90119–08202	28 – 16
90119–10054	24 – 34
90119–10068	31 – 5
90151–05M00	31 – 9
90157–05M19	32 – 4
90159–04005	17 – 4
90159–05059	35 – 4
90167–05009	16 – 27
90167–06M00	34 – 12
90170–09M03	33 – 5

PART NO. N° PIECES	REF. NO.
90170–16M01	30 – 41
90170–20137	15 – 11
90171–16011	31 – 16
90179–08003	19 – 18
90179–08M34	19 – 5
90179–35001	13 – 9
90183–02M03	30 – 52
90185–05002	31 – 10
90185–06M05	2 – 8
	3 – 8
90185–08018	25 – 13
90185–09M01	33 – 4
90185–10027	25 – 8
90185–22M11	24 – 14
90201–03313	30 – 50
90201–06M30	34 – 13
90201–10049	25 – 41
90201–10060	24 – 35
90201–10081	33 – 8
90201–10144	13 – 5
90201–10M20	23 – 14
	33 – 3
90201–12062	24 – 37
90201–12426	24 – 38
90201–12M07	21 – 18
90201–12M16	25 – 18
90201–13M19	25 – 27
90201–16014	7 – 17
90201–186F1	4 – 24
	36 – 12
90201–21M18	15 – 12
90201–22M05	25 – 28
90201–25M05	30 – 68
90201–30M00	25 – 2
90202–07M07	23 – 18
90202–21100	25 – 26
90206–10M04	23 – 32
90206–12052	21 – 17
90249–06M19	24 – 21
90250–07M02	30 – 53
90280–03017	13 – 10
90280–03M03	30 – 28
	37 – 28
90282–04010	30 – 64
90340–08002	30 – 9
90340–14M06	4 – 25
	29 – 6
90340–18M09	4 – 23

PART NO. N° PIECES	REF. NO.
90344–51003	4 – 6
90386–10025	24 – 18
90386–10M16	24 – 17
90386–12M37	21 – 15
90386–12MA2	21 – 16
90386–18M35	24 – 29
90386–18M92	24 – 28
90386–22MA4	24 – 13
90386–30M60	25 – 6
90386–30M77	25 – 4
90386–30M78	25 – 3
90386–90M90	23 – 13
90387–04001	18 – 19
90387–05004	35 – 5
90387–06119	9 – 9
	17 – 9
90387–06279	23 – 33
90387–06285	15 – 3
90387–06M03	11 – 26
90387–06M43	21 – 31
90387–06M45	23 – 28
90387–06M69	21 – 5
90387–10M42	33 – 6
90389–25M00	31 – 15
90401–08011	7 – 18
90430–06014	6 – 9
	36 – 4
90430–08003	1 – 15
	30 – 11
	37 – 11
90430–14115	4 – 26
	17 – 22
	36 – 13
90430–14M09	1 – 14
	29 – 7
	37 – 3
90445–07ME8	30 – 19
90445–09036	22 – 9
90445–09220	22 – 11
90445–09304	22 – 16
90445–096H2	22 – 12
90445–133F0	14 – 5
90446–13M11	14 – 8
90446–15006	14 – 12
90447–19009	25 – 39
90450–50001	9 – 7
90462–08067	22 – 17
90462–20005	21 – 32

PART NO. N° PIECES	REF. NO.
90464–06001	16 – 12
90464–07M05	16 – 7
90464–07M41	16 – 6
90464–07M56	8 – 11
90464–09130	22 – 22
90464–09M49	21 – 34
90464–12004	14 – 7
90464–12006	10 – 9
90464–12012	14 – 20
90464–12183	18 – 25
90464–13013	16 – 8
90464–13227	14 – 9
90464–14010	14 – 13
90464–15007	10 – 10
	10 – 11
90464–15008	10 – 8
	18 – 27
90464–16017	14 – 10
90464–18004	18 – 15
90464–18205	18 – 22
90464–18246	16 – 3
90464–20181	19 – 11
90464–30003	19 – 22
90464–99004	25 – 31
90465–08M83	12 – 24
90465–08M89	18 – 3
90465–11M10	9 – 16
	10 – 6
	12 – 17
	14 – 6
	21 – 35
	22 – 4
	22 – 15
	25 – 32
	25 – 33
	25 – 37
	30 – 21
	34 – 10
	35 – 6
90465–11M59	29 – 5
90465–13M18	35 – 7
90465–13M24	16 – 25
90465–13M97	15 – 19
	17 – 6
90467–09M17	14 – 11
90467–10M04	14 – 38
90467–11M08	14 – 25
90468–18008	23 – 16

PART NO. N° PIECES	REF. NO.
90468–18008	23 – 19
	23 – 35
90480–06M19	15 – 5
90480–12314	6 – 22
	15 – 6
	16 – 24
90480–13M24	21 – 30
90480–15M31	15 – 4
90501–12082	23 – 11
90501–12M48	30 – 49
90506–14M24	24 – 22
90506–18023	21 – 23
91318–03005	26 – 56
91318–03025	26 – 55
91318–05030	26 – 54
91318–05045	26 – 27
91380–05020	26 – 64
91490–16010	23 – 26
91490–20015	23 – 15
91490–30025	31 – 17
91690–30020	24 – 19
92903–08100	19 – 21
92990–06100	35 – 3
92990–08200	7 – 19
93101–23070	30 – 30
	37 – 15
	37 – 29
93101–25M03	30 – 63
	37 – 20
93101–35002	5 – 11
	36 – 8
93102–37M40	13 – 14
	36 – 2
93102–43004	5 – 10
	36 – 7
93103–18011	28 – 2
	37 – 5
93106–09014	30 – 16
	37 – 13
93210–04279	34 – 9
93210–04N51	26 – 46
93210–064A5	26 – 41
93210–07003	30 – 55
	37 – 21
93210–12790	29 – 9
	37 – 4
93210–13M63	6 – 7
	36 – 3

PART NO. N° PIECES	REF. NO.
93210–16275	33 – 10
93210–24M79	6 – 24
	14 – 36
	36 – 15
	36 – 16
93210–29M94	25 – 5
93210–33003	10 – 4
93210–44006	26 – 10
93210–46044	30 – 32
	37 – 16
	37 – 30
93210–49001	26 – 6
93210–49046	30 – 15
	37 – 12
93210–64488	26 – 63
93210–86M39	30 – 61
	37 – 19
93306–207U0	30 – 59
93315–52563	30 – 3
93317–322V0	30 – 43
93317–325U0	30 – 62
93332–00095	30 – 8
93332–000U3	30 – 6
93410–18M05	24 – 30
93410–28M06	25 – 9
93420–36M01	28 – 19
93450–17129	5 – 9
93450–40165	30 – 31
93501–04M02	23 – 12
93501–08001	26 – 43
93503–16003	26 – 14
	30 – 51
93505–32038	26 – 38
93604–10M03	4 – 9
	28 – 10
	30 – 36
	37 – 34
93604–26256	26 – 53
93605–17002	13 – 3
93606–12019	4 – 3
	28 – 21
	29 – 3
	31 – 4
93606–19002	24 – 2
93608–12M05	9 – 1
	28 – 3
93700–06002	24 – 11
94702–00429	1 – 6

PART NO. N° PIECES	REF. NO.
94702–00429	6 – 25
95023–06030	15 – 13
	15 – 15
95333–08600	19 – 20
95380–05600	14 – 34
95380–05700	23 – 23
95380–05800	2 – 4
	3 – 4
95380–06600	9 – 13
	21 – 27
95380–08600	14 – 23
95380–12600	24 – 39
	25 – 25
95680–08330	19 – 4
95780–06300	34 – 14
95812–06025	29 – 11
95817–10035	13 – 4
95D95–06020	15 – 2
95D95–06045	23 – 31
95D95–08016	14 – 22
97513–06535	4 – 5
97513–08545	19 – 16
97595–05512	4 – 21
	15 – 18
97595–05514	23 – 7
97602–04316	27 – 9
97607–04210	6 – 16
97780–60520	22 – 7
97780–60620	17 – 2
	17 – 8
	17 – 20
	34 – 7
97880–06035	34 – 12
97885–06008	24 – 5
	25 – 35
97980–05214	10 – 2
97980–06216	34 – 4
97980–06325	21 – 28
97985–04116	18 – 20
97985–06216	25 – 30
97D95–06010	24 – 23
97D95–06014	21 – 20
97E75–06525	28 – 13
97E75–08530	25 – 16
97E75–10545	28 – 20
97E95–06514	9 – 20
	16 – 2
	16 – 21
97E95–06516	9 – 15
	9 – 18
	9 – 22
	16 – 16
	19 – 12
	19 – 13
	19 – 14
	19 – 15
	30 – 17
97E95–06520	4 – 22
	6 – 18
	6 – 20
	17 – 15
	19 – 9
	23 – 3
97E95–06525	14 – 2
	16 – 9
	16 – 14
	23 – 4
97E95–06530	14 – 37
97E95–06610	17 – 14
	17 – 17
97E95–08525	19 – 7
97E95–08535	19 – 6
98980–05025	6 – 5
99001–08600	30 – 56
99002–03600	26 – 34
99009–32500	26 – 21
99530–08012	6 – 11
	15 – 16
99530–10114	19 – 3