YAMAHA

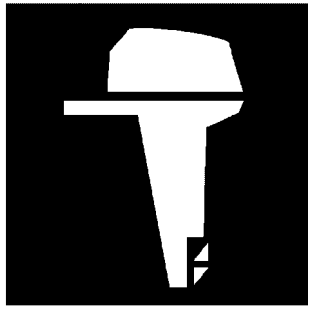

PARTS CATALOGUE
CATALOGUE DE PIECES DETACHEES

H3.7AV(HARMO)-2022 (6JM2)

YAMAHA
GENUINE
Parts & Accessories

1W6JM-300FA

( )

H3.7AV(HARMO)
PARTS CATALOGUE
©2022 by Yamaha Motor Co., Ltd.
1st edition, March 2022
All rights reserved.
Any reprinting or unauthorized use
without the written permission of
Yamaha Motor Co., Ltd.
is expressly prohibited.
Printed in Japan.

H3.7AV(HARMO)
CATALOGUE DE PIECES DETACHEES
©2022 par Yamaha Motor Co., Ltd.
1re édition, mars 2022
Tous droits réservés
Toute réimpression ou utilisation
non autorisée sans la permission écrite
de la Yamaha Motor Co., Ltd.
est formellement interdite.
Imprimé au Japon

FOREWORD

This Parts Catalogue is related to the parts for the model(s) on the cover page. When you are ordering replacement parts, please refer to this Parts Catalogue and quote both part numbers and part names correctly.

1. Modifications or additions which have been made after the issue of the Parts Catalogue will be announced in the Parts News.
   It is advisable that you make the necessary corrections to the Parts Catalogue according to the Parts News.

2. Abbreviations
   The following abbreviations are used in this Parts Catalogue.
   "UR" Use specified parts number.
   "UN" Use as many as needed.
   "AP" Alternate Parts
   "LM" Locally Made (Parts need to be ordered locally)
   "F#" Frame No. (Applicable machine No.)
   "O/S" Over Size

3. The number of components for assembly
   - Parts, which are to be supplied in an assembly, are listed with a dot (.) in front of the part name as shown below.
   - The numeral appearing to the right of each component part indicates the quantity of parts for each assembly unit.

PART NO.	DESCRIPTION	Q'TY	REMARKS
2F5–83310–60	FRONT FLASHER LIGHT ASSY	2	
115–83311–60	.BULB (6V–18W)	1	

4. Applicable colours of graphics are represented in the "REMARKS" as shown below.

PART NO.	DESCRIPTION	Q'TY	REMARKS
2N4–24110–00–X5	FUEL TANK COMP.	2	MXR
3J1–24240–10	.GRAPHIC, FUEL TANK	1	FOR MXR

5. Note that the illustrations for reference in finding parts numbers are not to be used for assembling. When assembling, please use the applicable service manual.

6. The asterisk (*) before a reference number indicates modified items after the first edition.

7. Applicable Serial No.
   Engine Serial No.

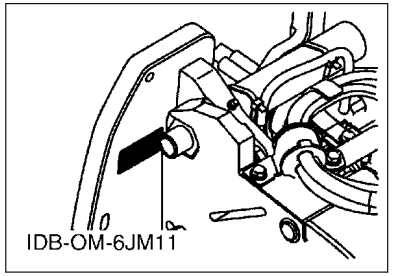

8. Applicable Engine Starting Serial No.

Model	Serial No.	Model	Serial No.
H3.7AV	6JM-1000034		

9. Applicable Colour Code

Abbreviation	Colour Name	Colour Code
S3	SILVER 3	0791

10. Quantity Column Information

Column No.	Name Of Q'ty Column	Applicable Model
1	6JM2	H3.7AV(HARMO)

AVANT–PROPOS

Ce catalogue de pièces détachées concerne les pièces pour le(s) modèle(s) indiqué(s) sur la page de couverture. Lorsque vous commandez des pièces de rechange, veuillez vous référer à ce catalogue de pieces détachées et indiquer clairement les numéros et les noms des pièces détachées.

1. Les modifications ou ajouts ayant été effectués après la parution du catalogue de pièces détachées seront décrits dans les Bulletins d'information concernant les pièces détachées.
   Il est recommandé que vous apportiez les corrections nécessaires au catalogue des pièces détachées en vous référant aux Bulletins d'information.

2. Abréviations
   Dans ce catalogue, les abréviations suivantes sont utilisées:
   "UR" Utiliser le numéro de pièces spécifié.
   "UN" Utiliser autant que nécessaire.
   "AP" Pièces de substitution
   "LM" Fabrication locale (les pièces doivent être commandées localement.)
   "F#" N° de cadre (applicable au N° de série)
   "O/S" Surdimensionné

3. Nombre de pièces d'un assemblage
   - Les pièces fournies comme composants d'un assemblage sont précédées d'un point (.) de la manière indiquée ci–dessous.
   - Le chiffre apparaissant à la droite de chaque composant indique la quantité de pièces pour chaque unité d'assemblage.

N° PIECES	DESCRIPTION	QTE	REMARQUES
2F5–83310–60	ENS. CLIGNOTANT AVANT	2	
115–83311–60	.AMPOULE (6V–18W)	1	

4. Les couleurs concernant les graphiques sont indiquées dans la colonne "REMARQUES", comme indiqué ci–dessous.

N° PIECES	DESCRIPTION	QTE	REMARQUES
2N4–24110–00–X5	RESERVOIR A ESSENCE.	2	MXR
3J1–24240–10	.GRAPHIQUE	1	POUR MXR

5. Veuillez noter que les illustrations sont indiquées à titre de référence pour trouver les numéros de pièces, non pour être utilisées lors de l'assemblage. Lors de l'assemblage, veuillez utiliser le manuel d'entretien adéquat.

6. L'astérisque (*) placé devant un numéro de référence indique des éléments qui ont été modifiés après la première édition.

7. N° de série applicable
   N° de Série du moteur

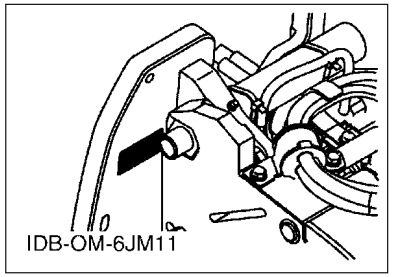

8. N° de série initial du moteur applicable

Modèle	N° de série	Modèle	N° de série
H3.7AV	6JM-1000034		

9. Code couleur applicable

Abréviation	Nom de la couleur	Code couleur
S3	SILVER 3	0791

10. Informations relatives à la colonne Quantité

N° de la colonne	Nom de la colonne Qté	Modèle applicable
1	6JM2	H3.7AV(HARMO)

CONTENTS

TOP COWLING..... 1
DRIVE UNIT..... 2
ELECTRICAL 1.....3
ELECTRICAL 2.....5
CL5 DISPLAY.....7
OPTIONAL PARTS 1.....8
OPTIONAL PARTS 2.....9
OPTIONAL PARTS 3.....10

INDEX

NUMERICAL INDEX.....11

TABLE DES MATIERES

CAPOT SUPERIEUR..... 1
UNITE DE PROMENADE.....2
PARTIE ELECTRIQUE 1.....3
PARTIE ELECTRIQUE 2.....5
CL5 AFFICHAGE.....7
PIECES OPTIONNELLES 1.....8
PIECES OPTIONNELLES 2.....9
PIECES OPTIONNELLES 3.....10

INDEX

INDEX NUMERIQUE.....11

FIG. 1 TOP COWLING — CAPOT SUPERIEUR

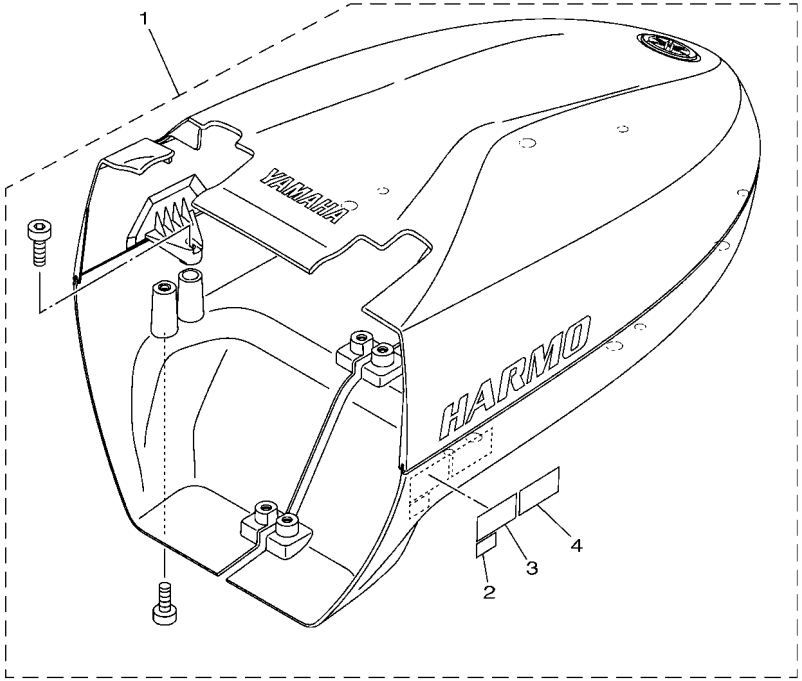

6JM1100-V010

REF. NO.	PART NO. N° PIECES	DESCRIPTION DESCRIPTION	6JM2					REMARKS REMARQUES
1	6JM–W4260–00–P0	TOP COWLING ASSY CAPOT (ENS.)	1					
2	6AH–81996–00	.MARK .MARQUE	1					
3	6JM–42794–00	.LABEL, WARNING (GENERAL) .ETIQUETTE, AVERTISSEMENT	1					
4	6JM–42794–10	.LABEL, WARNING (GENERAL) .ETIQUETTE, AVERTISSEMENT	1					

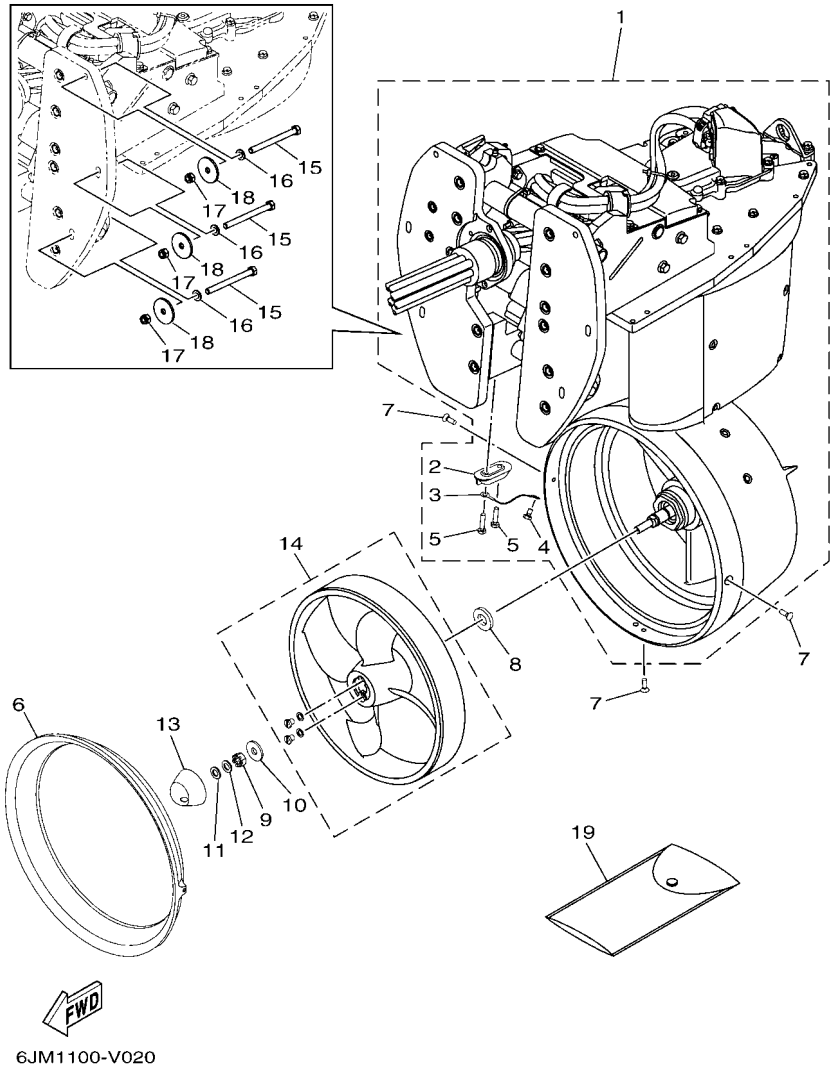

FIG. 2 DRIVE UNIT — UNITE DE PROMENADE

REF. NO.	PART NO. N° PIECES	DESCRIPTION DESCRIPTION	6JM2					REMARKS REMARQUES
1	6JM–W450A–00–P0	DRIVE UNIT UNITE DE PROMENADE	1					
2	65W–45251–00	.ANODE .ANODE	1					
3	6E5–82148–00	.WIRE, LEAD 4 .FIL 4	1					
4	97E95–06510	.BOLT, HEXAGON W/W DEEP RECESS .VIS HEXAGONAL AVC RONDELLE	1					
5	90101–06020	.BOLT .BOULON	2					
6	6JM–12692–00–P0	DUCT, 2 CONDUIT 2	1					
7	90152–05M02	SCREW, COUNTERSUNK VIS, TETE NOYEE	3					
8	90201–17M00	WASHER, PLATE RONDELLE, PLATE	1					
9	90171–10M01	NUT, CASTLE ECROU, CRENELE	1					
10	90201–10M01	WASHER, PLATE RONDELLE, PLATE	1					
11	92995–10600	WASHER RONDELLE	1					
12	92990–10100	WASHER, SPRING RONDELLE, GROWER	1					
13	6JM–45985–00–P0	CAP, PROPELLER CAPUCHON HELICE	1					
14	6JM–W511A–00–P0	IMPELLER 1 TURBINE 1	1					
15	90101–08M88	BOLT BOULON	6					
16	92990–08600	WASHER, PLATE RONDELLE, PLATE	6					
17	90185–08057	NUT, SELF-LOCKING ECROU,AUTO-BLOQUANT	6					
18	90201–08MA4	WASHER, PLATE RONDELLE, PLATE	6					
19	6JM–W2810–00	TOOL KIT TROUSSE A OUTILS	1					

FIG. 3 ELECTRICAL 1 — PARTIE ELECTRIQUE 1

SINGLE MOTER

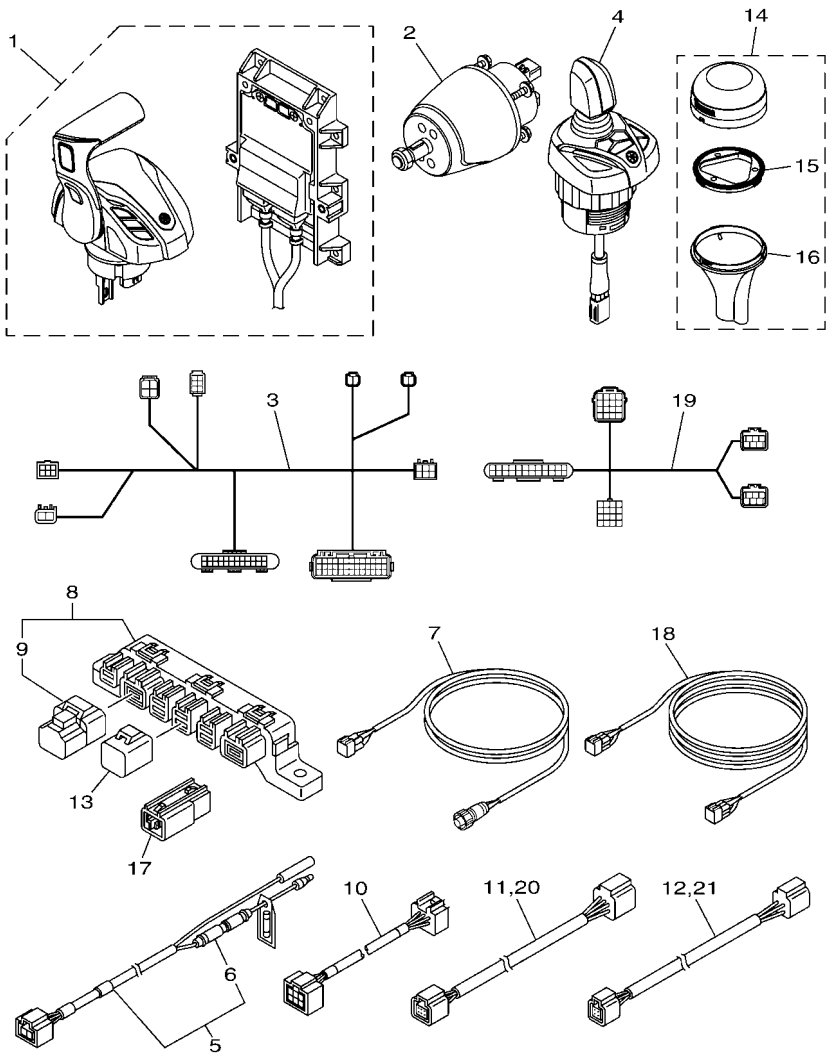

REF. NO.	PART NO. N° PIECES	DESCRIPTION DESCRIPTION	6JM2					REMARKS REMARQUES
1	6JM–48205–01	REMOTE CONTROL ASSY BOITIER DE COMMANDE A DISTANCE	1					
2	6JM–615A0–00	HELM ASSY. ASSEMBLAGE DE GOUVERNAIL	1					
3	6JM–82386–00	EXTENSION, WIRE HARNESS EXTENSION, FAISCEAU	1					
4	6JM–482A0–01	JOYSTICK ASSY CONTROLEUR DE MANCHE A BALAI	1					
5	6Y8–83553–02	8FT POWER WIRE FIL	1					
6	6G1–82151–01	.FUSE (10A) .FUSIBLE (10A)	1					
7	6YM–83553–00	CONVERSION HARNESS FIL	2					
8	6Y8–81920–01	MULTI HUB ASSY BORNE	1					
9	6Y8–85371–01	.END OF LINE RESISTOR .RESISTANCE DE FIN DE LIGNE	1					
10	6Y9–83553–00	WIRE, LEAD FIL	1					
11	6Y8–82553–01	1FT MAIN BUS EXTENSION, FAISCEAU	1					
12	6Y8–82521–31	6FT PIGTAIL BUS FAISCEAU (L: 6FT.)	1					
13	6Y8–82582–11	CAP 1 (4PIN) COUVERCLE 1 (4P)	1					
14	6X9–88107–01	GPS UNIT BLOC DE GPS	1					
15	6X9–8252H–00	.PLATE, HOLDER .PLAQUE, SUPPORT	1					
16	6X9–8255H–00	.HOLDER, SOCKET .SUPPORT	1					
17	6Y8–81920–11	IN-LINE HUB ASSY BORNE	1					
18	6X6–8258A–91	EXTENSION, WIRE HARNESS (1.5M) EXTENSION, FIL FAISCEAU (1.5M)	1					UR 1.5M-5FT MAIN-HARNESS (16P) UR 1.5M-5FT MAIN-HARNESS (16P)
	6X6–8258A–51	EXTENSION, WIRE HARNESS (3.7M) EXTENSION, FIL FAISCEAU (3.7M)	1					UR 3.7M-12FT MAIN-HARNESS (16P) UR 3.7M-12FT MAIN-HARNESS (16P)
	6X6–8258A–61	EXTENSION, WIRE HARNESS (5.2M) EXTENSION, FIL FAISCEAU (5.2M)	1					UR 5.2M-17FT MAIN-HARNESS (16P) UR 5.2M-17FT MAIN-HARNESS (16P)
	6X6–8258A–01	EXTENSION, WIRE HARNESS (6.1M) EXTENSION, FIL FAISCEAU (6.1M)	1					UR 6M-19FT MAIN-HARNESS (16P) UR 6M-19FT MAIN-HARNESS (16P)
	6X6–8258A–11	EXTENSION, WIRE HARNESS (7M) EXTENSION, FIL FAISCEAU (7M)	1					UR 7M-23FT MAIN-HARNESS (16P) UR 7M-23FT MAIN-HARNESS (16P)
	6X6–8258A–21	EXTENSION, WIRE HARNESS (8M) EXTENSION, FIL FAISCEAU (8M)	1					UR 8M-26FT MAIN-HARNESS (16P) UR 8M-26FT MAIN-HARNESS (16P)
	6X6–8258A–31	EXTENSION, WIRE HARNESS (10M) EXTENSION, FIL FAISCEAU (10M)	1					UR 10M-32FT MAIN-HARNESS (16P) UR 10M-32FT MAIN-HARNESS (16P)
	6X6–8258A–41	EXTENSION, WIRE HARNESS (12M) EXTENSION, FIL FAISCEAU (12M)	1					UR 12M-39FT MAIN-HARNESS (16P) UR 12M-39FT MAIN-HARNESS (16P)
	6X6–8258A–71	EXTENSION, WIRE HARNESS (15M) EXTENSION, FIL FAISCEAU (15M)	1					UR 15M-49FT MAIN-HARNESS (16P) UR 15M-49FT MAIN-HARNESS (16P)
	6X6–8258A–81	EXTENSION, WIRE HARNESS (24M) EXTENSION, FIL FAISCEAU (24M)	1					UR 24M-79FT MAIN-HARNESS (16P) UR 24M-79FT MAIN-HARNESS (16P)

FIG. 3 ELECTRICAL 1 — PARTIE ELECTRIQUE 1

SINGLE MOTER

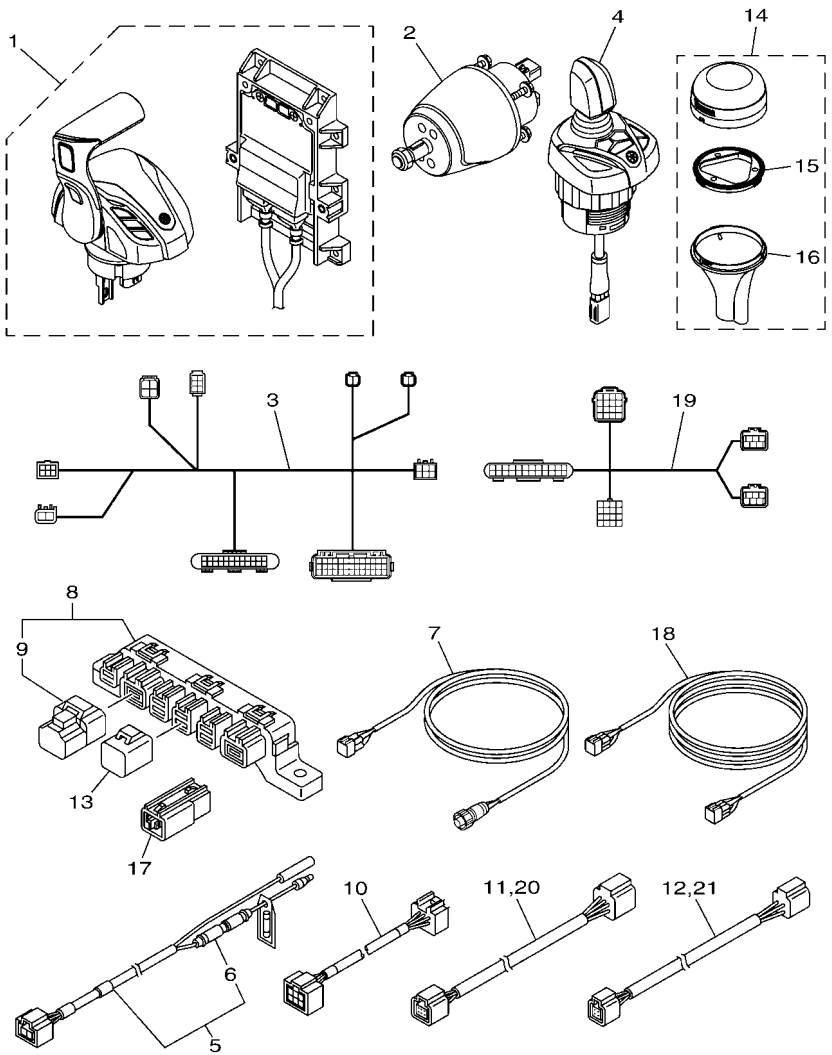

6JM2100-W030

REF. NO.	PART NO. N° PIECES	DESCRIPTION DESCRIPTION	6JM2					REMARKS REMARQUES
19	6GR–8258A–01	HELM HARNESS 0.9M-3FT EXTENSION, FAISCEAU DE FILS	1					UR SINGLE ENGINE (MAIN ST) UR SINGLE ENGINE (MAIN ST)
	6GR–8258A–41	HELM HARNESS 1.8M-6FT EXTENSION, FAISCEAU DE FILS	1					UR SINGLE ENGINE (MAIN ST) UR SINGLE ENGINE (MAIN ST)
20	6Y8–82553–01	1FT MAIN BUS EXTENSION, FAISCEAU	1					UR UR
	6Y8–82553–50	10FT MAIN BUS EXTENSION, FAISCEAU	1					UR UR
	6Y8–82553–11	15FT MAIN BUS EXTENSION, FAISCEAU	1					UR UR
	6Y8–82553–21	20FT MAIN BUS EXTENSION, FAISCEAU	1					UR UR
	6Y8–82553–31	25FT MAIN BUS EXTENSION, FAISCEAU	1					UR UR
	6Y8–82553–41	30FT MAIN BUS EXTENSION, FAISCEAU	1					UR UR
21	6Y8–82521–01	1FT PIGTAIL BUS FAISCEAU (L: 1FT.)	1					UR UR
	6Y8–82521–11	2FT PIGTAIL BUS FAISCEAU (L: 2FT.)	1					UR UR

FIG. 4 ELECTRICAL 2 — PARTIE ELECTRIQUE 2

TWIN MOTER

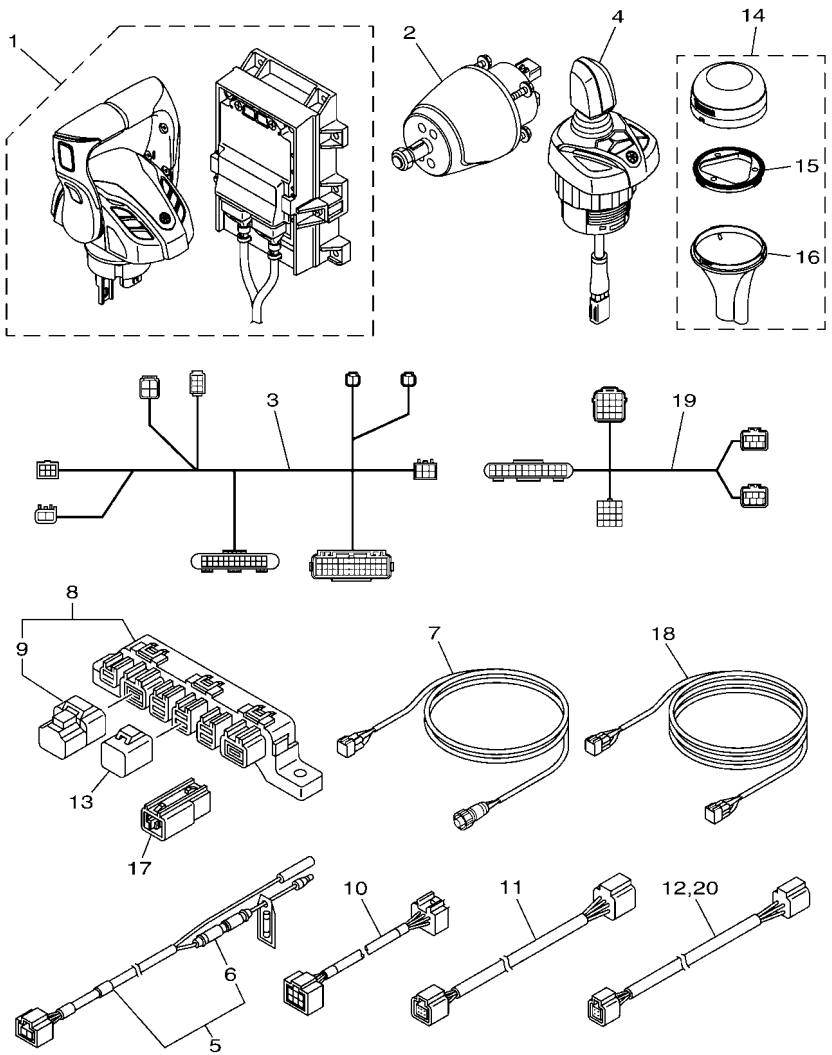

6JM2100-W040

REF. NO.	PART NO. N° PIECES	DESCRIPTION DESCRIPTION	6JM2					REMARKS REMARQUES
1	6JM–48207–01	REMOTE CONTROL ASSY BOITIER DE COMMANDE A DISTANCE	1					
2	6JM–615A0–00	HELM ASSY. ASSEMBLAGE DE GOUVERNAIL	1					
3	6JM–82386–00	EXTENSION, WIRE HARNESS EXTENSION, FAISCEAU	1					
4	6JM–482A0–01	JOYSTICK ASSY CONTROLEUR DE MANCHE A BALAI	1					
5	6Y8–83553–02	8FT POWER WIRE FIL	1					
6	6G1–82151–01	.FUSE (10A) .FUSIBLE (10A)	1					
7	6YM–83553–00	CONVERSION HARNESS FIL	2					
8	6Y8–81920–01	MULTI HUB ASSY BORNE	1					
9	6Y8–85371–01	.END OF LINE RESISTOR .RESISTANCE DE FIN DE LIGNE	1					
10	6Y9–83553–00	WIRE, LEAD FIL	1					
11	6Y8–82553–01	1FT MAIN BUS EXTENSION, FAISCEAU	1					
12	6Y8–82521–31	6FT PIGTAIL BUS FAISCEAU (L: 6FT.)	1					
13	6Y8–82582–11	CAP 1 (4PIN) COUVERCLE 1 (4P)	1					
14	6X9–88107–01	GPS UNIT BLOC DE GPS	1					
15	6X9–8252H–00	.PLATE, HOLDER .PLAQUE, SUPPORT	1					
16	6X9–8255H–00	.HOLDER, SOCKET .SUPPORT	1					
17	6Y8–81920–11	IN-LINE HUB ASSY BORNE	1					
18	6X6–8258A–91	EXTENSION, WIRE HARNESS (1.5M) EXTENSION, FIL FAISCEAU (1.5M)	2					UR 1.5M-5FT MAIN-HARNESS (16P) UR 1.5M-5FT MAIN-HARNESS (16P)
	6X6–8258A–51	EXTENSION, WIRE HARNESS (3.7M) EXTENSION, FIL FAISCEAU (3.7M)	2					UR 3.7M-12FT MAIN-HARNESS (16P) UR 3.7M-12FT MAIN-HARNESS (16P)
	6X6–8258A–61	EXTENSION, WIRE HARNESS (5.2M) EXTENSION, FIL FAISCEAU (5.2M)	2					UR 5.2M-17FT MAIN-HARNESS (16P) UR 5.2M-17FT MAIN-HARNESS (16P)
	6X6–8258A–01	EXTENSION, WIRE HARNESS (6.1M) EXTENSION, FIL FAISCEAU (6.1M)	2					UR 6M-19FT MAIN-HARNESS (16P) UR 6M-19FT MAIN-HARNESS (16P)
	6X6–8258A–11	EXTENSION, WIRE HARNESS (7M) EXTENSION, FIL FAISCEAU (7M)	2					UR 7M-23FT MAIN-HARNESS (16P) UR 7M-23FT MAIN-HARNESS (16P)
	6X6–8258A–21	EXTENSION, WIRE HARNESS (8M) EXTENSION, FIL FAISCEAU (8M)	2					UR 8M-26FT MAIN-HARNESS (16P) UR 8M-26FT MAIN-HARNESS (16P)
	6X6–8258A–31	EXTENSION, WIRE HARNESS (10M) EXTENSION, FIL FAISCEAU (10M)	2					UR 10M-32FT MAIN-HARNESS (16P) UR 10M-32FT MAIN-HARNESS (16P)
	6X6–8258A–41	EXTENSION, WIRE HARNESS (12M) EXTENSION, FIL FAISCEAU (12M)	2					UR 12M-39FT MAIN-HARNESS (16P) UR 12M-39FT MAIN-HARNESS (16P)
	6X6–8258A–71	EXTENSION, WIRE HARNESS (15M) EXTENSION, FIL FAISCEAU (15M)	2					UR 15M-49FT MAIN-HARNESS (16P) UR 15M-49FT MAIN-HARNESS (16P)
	6X6–8258A–81	EXTENSION, WIRE HARNESS (24M) EXTENSION, FIL FAISCEAU (24M)	2					UR 24M-79FT MAIN-HARNESS (16P) UR 24M-79FT MAIN-HARNESS (16P)

FIG. 4 ELECTRICAL 2 — PARTIE ELECTRIQUE 2

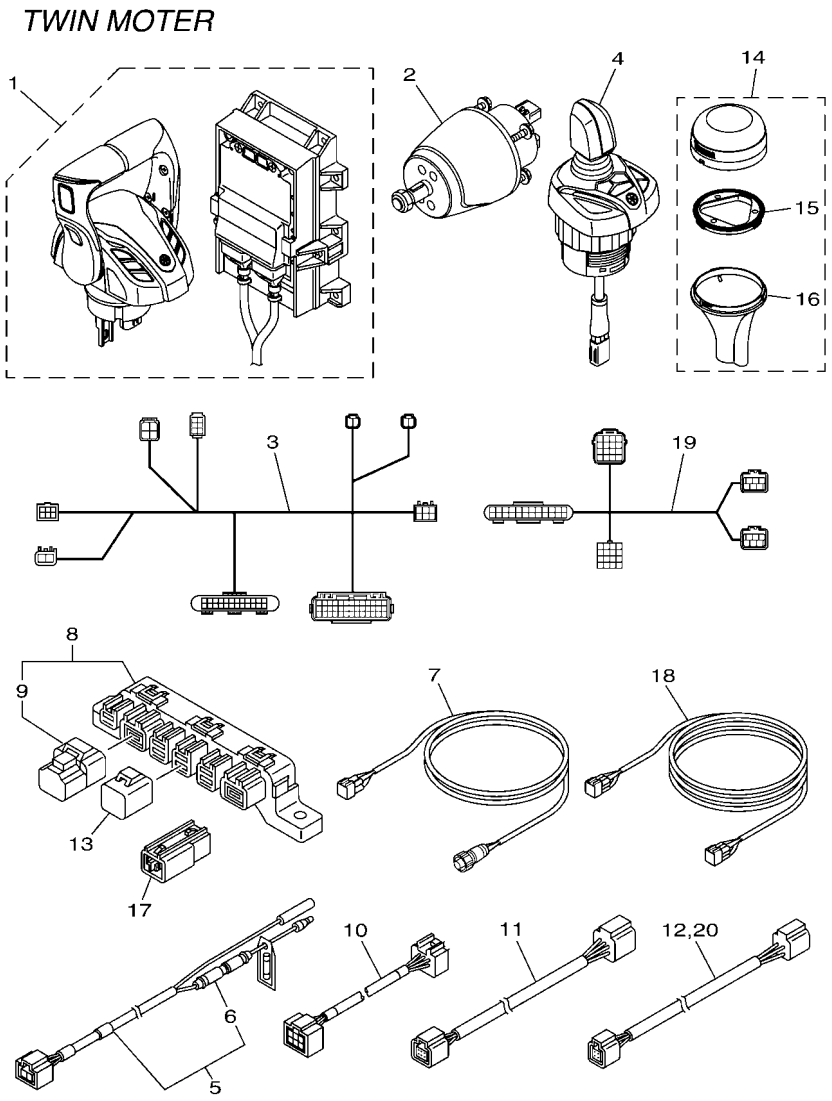

REF. NO.	PART NO. N° PIECES	DESCRIPTION DESCRIPTION	6JM2					REMARKS REMARQUES
19	6GR–8258A–11	EXTENSION, WIRE HARNESS EXTENSION, FAISCEAU DE FILS	2					UR MULTIPLE ENGINES (MAIN ST) UR MULTIPLE ENGINES (MAIN ST)
	6GR–8258A–51	EXTENSION, WIRE HARNESS EXTENSION, FAISCEAU DE FILS	2					UR MULTIPLE ENGINES (MAIN ST) UR MULTIPLE ENGINES (MAIN ST)
	6GR–8258A–61	EXTENSION, WIRE HARNESS EXTENSION, FAISCEAU DE FILS	2					UR MULTIPLE ENGINES (MAIN ST) UR MULTIPLE ENGINES (MAIN ST)
20	6Y8–82521–01	1FT PIGTAIL BUS FAISCEAU (L: 1FT.)	1					UR UR
	6Y8–82521–11	2FT PIGTAIL BUS FAISCEAU (L: 2FT.)	1					UR UR
	6Y8–82521–21	3FT PIGTAIL BUS FAISCEAU (L: 3FT.)	1					UR UR
	6Y8–82521–31	6FT PIGTAIL BUS FAISCEAU (L: 6FT.)	1					UR UR
	6Y8–82521–41	9FT PIGTAIL BUS FAISCEAU (L: 9FT.)	1					UR UR
	6Y8–82521–51	12FT PIGTAIL BUS FAISCEAU (L: 12FT.)	1					UR UR

FIG. 5 CL5 DISPLAY — CL5 AFFICHAGE

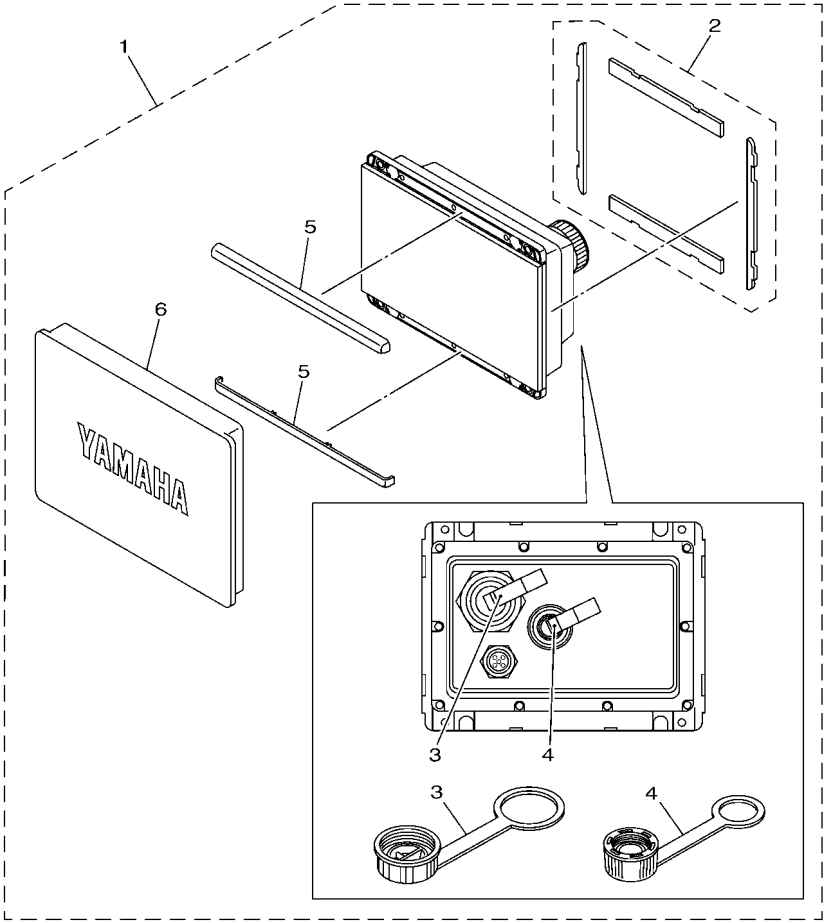

6ALH300-V410

REF. NO.	PART NO. N° PIECES	DESCRIPTION DESCRIPTION	6JM2					REMARKS REMARQUES
1	6YM–83710–14	CL5 DISPLAY CL5 AFFICHAGE	1					WITHOUT Wi-Fi WITHOUT Wi-Fi
2	6YM–22480–00	.SEAL ASSY .JEU DE JOINT	1					
3	6YM–83956–00	.CAP 1 .COUVERCLE	1					
4	6YD–83957–00	.CAP 2 .COUVERCLE	1					
5	6YM–83512–00	.RIM .JANTE	2					
6	6YM–87278–00	.COVER, METER .COUVERCLE, COMPTEUR	1					

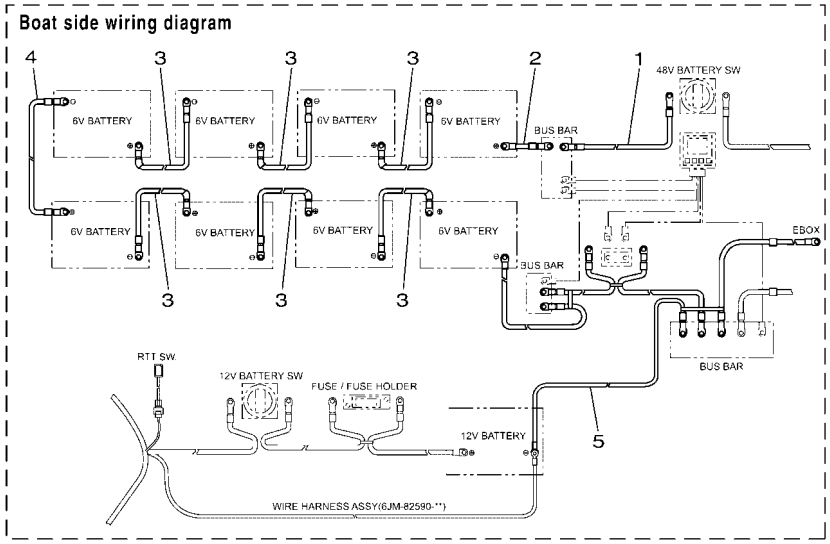

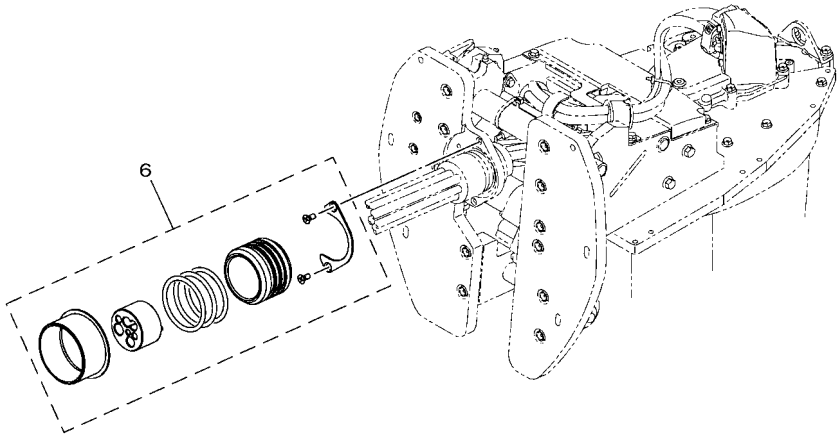

6JM1100-V060

FIG. 6 OPTIONAL PARTS 1 — PIECES OPTIONNELLES 1

REF. NO.	PART NO. N° PIECES	DESCRIPTION DESCRIPTION	6JM2					REMARKS REMARQUES
1	6JM–82223–10	WIRE, HIGH VOLTAGE PLUS LEAD 2 CABLE, BATTERIE 2	1					
2	6JM–82223–20	WIRE, HIGH VOLTAGE PLUS LEAD 2 CABLE, BATTERIE 2	1					
3	6JM–82212–00	WIRE, HIGH VOLTAGE LEAD 2 CABLE, BATTERIE 2	6					
4	6JM–82212–10	WIRE, HIGH VOLTAGE LEAD 2 CABLE, BATTERIE 2	1					
5	6JM–82224–50	WIRE, HIGH VOLTAGE MINUS LEAD2 CABLE, BATTERIE 2	1					
6	6JM–W4272–00	GROMMET SET JEU D PASSE-FIL	1					

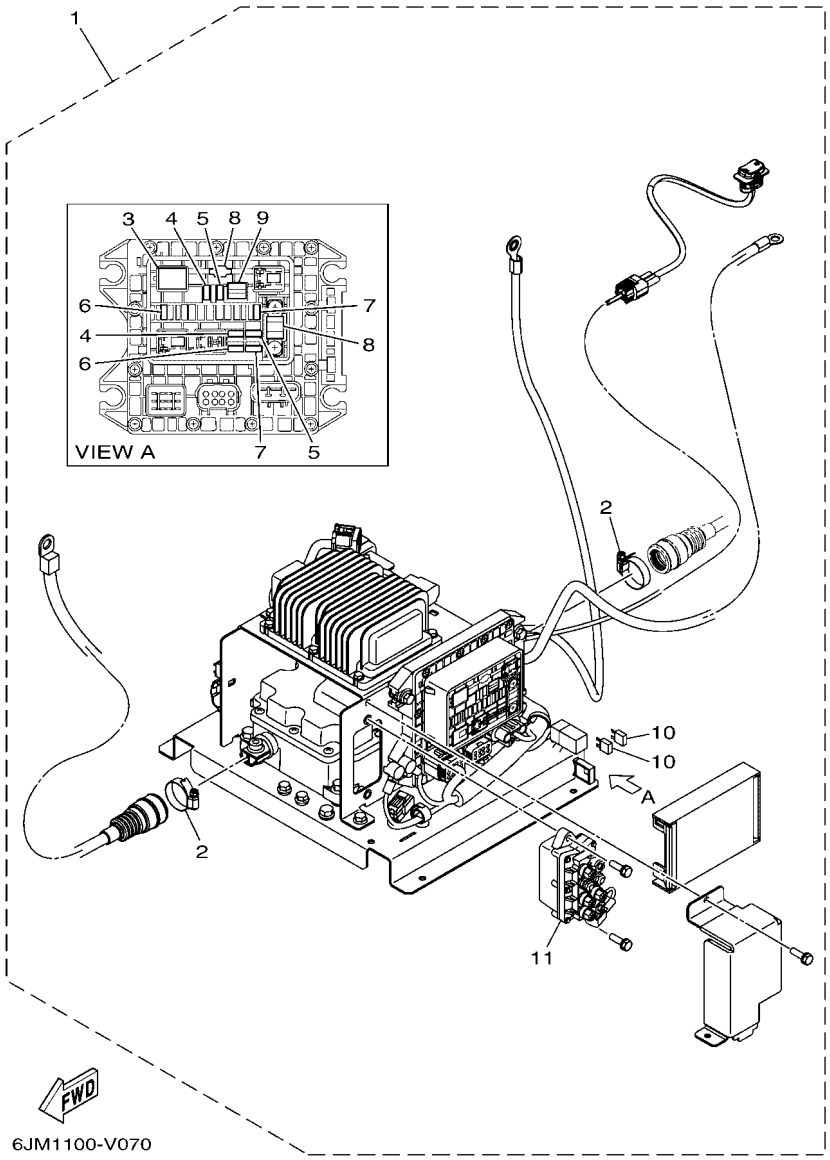

FIG. 7 OPTIONAL PARTS 2 — PIECES OPTIONNELLES 2

REF. NO.	PART NO. N° PIECES	DESCRIPTION DESCRIPTION	6JM2					REMARKS REMARQUES
1	6JM–W82A0–00	ELECTRIC UNIT UNITE DE ELECTRIQUE	1					
2	6JM–82361–00	.CLAMP, CORD .COLLIER, CORDON	2					
3	6EX–8195A–00	.RELAY ASSY .RELAIS COMPLET	1					
4	67F–82151–30	.FUSE (3A) .FUSIBLE (3A)	2					
5	67F–82151–20	.FUSE (5A) .FUSIBLE (5A)	2					
6	67F–82151–40	.FUSE (10A) .FUSIBLE (10A)	2					
7	67F–82151–10	.FUSE (30A) .FUSIBLE (30A)	2					
8	6JM–82151–00	.FUSE (30A) .FUSIBLE (30A)	2					
9	6EX–2812A–00	.PULLER, FUSE .TENDEUR, FUSIBLE	1					
10	67F–82151–10	.FUSE (30A) .FUSIBLE (30A)	2					
11	63P–81950–00	.RELAY ASSY .RELAIS COMPLET	1					

FIG. 8 OPTIONAL PARTS 3 — PIECES OPTIONNELLES 3

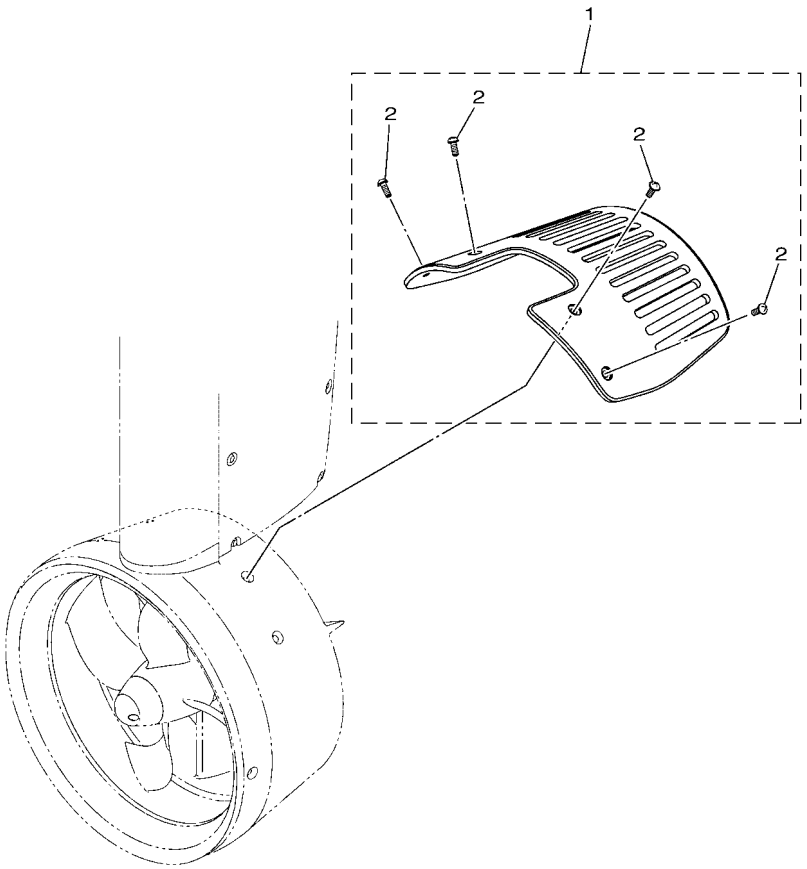

6JM2100-W080

REF. NO.	PART NO. N° PIECES	DESCRIPTION DESCRIPTION	6JM2					REMARKS REMARQUES
1	6JM–45180–00	PLATE ASSY. PLAQUE COMPLET	1					
2	90159–06M03	.SCREW, WITH WASHER .VIS, AVEC RONDELLE	4					

NUMERICAL INDEX
INDEX NUMERIQUE

PART NO. N° PIECES	REF. NO.
6JM–12692–00–P0	2 – 6
6YM–22480–00	5 – 2
6EX–2812A–00	7 – 9
6JM–42794–00	1 – 3
6JM–42794–10	1 – 4
6JM–45180–00	8 – 1
65W–45251–00	2 – 2
6JM–45985–00–P0	2 – 13
6JM–48205–01	3 – 1
6JM–48207–01	4 – 1
6JM–482A0–01	3 – 4
	4 – 4
6JM–615A0–00	3 – 2
	4 – 2
6Y8–81920–01	3 – 8
	4 – 8
6Y8–81920–11	3 – 17
	4 – 17
63P–81950–00	7 – 11
6EX–8195A–00	7 – 3
6AH–81996–00	1 – 2
6E5–82148–00	2 – 3
6JM–82151–00	7 – 8
6G1–82151–01	3 – 6
	4 – 6
67F–82151–10	7 – 7
	7 – 10
67F–82151–20	7 – 5
67F–82151–30	7 – 4
67F–82151–40	7 – 6
6JM–82212–00	6 – 3
6JM–82212–10	6 – 4
6JM–82223–10	6 – 1
6JM–82223–20	6 – 2
6JM–82224–50	6 – 5
6JM–82361–00	7 – 2
6JM–82386–00	3 – 3
	4 – 3
6Y8–82521–01	3 – 21
	4 – 20
6Y8–82521–11	3 – 21
	4 – 20
6Y8–82521–21	4 – 20
6Y8–82521–31	3 – 12
	4 – 12
	4 – 20
6Y8–82521–41	4 – 20
6Y8–82521–51	4 – 20

PART NO. N° PIECES	REF. NO.
6X9–8252H–00	3 – 15
	4 – 15
6Y8–82553–01	3 – 11
	3 – 20
	4 – 11
6Y8–82553–11	3 – 20
6Y8–82553–21	3 – 20
6Y8–82553–31	3 – 20
6Y8–82553–41	3 – 20
6Y8–82553–50	3 – 20
6X9–8255H–00	3 – 16
	4 – 16
6Y8–82582–11	3 – 13
	4 – 13
6GR–8258A–01	3 – 19
6X6–8258A–01	3 – 18
	4 – 18
6GR–8258A–11	4 – 19
6X6–8258A–11	3 – 18
	4 – 18
6X6–8258A–21	3 – 18
	4 – 18
6X6–8258A–31	3 – 18
	4 – 18
6GR–8258A–41	3 – 19
6X6–8258A–41	3 – 18
	4 – 18
6GR–8258A–51	4 – 19
6X6–8258A–51	3 – 18
	4 – 18
6GR–8258A–61	4 – 19
6X6–8258A–61	3 – 18
	4 – 18
6X6–8258A–71	3 – 18
	4 – 18
6X6–8258A–81	3 – 18
	4 – 18
6X6–8258A–91	3 – 18
	4 – 18
6YM–83512–00	5 – 5
6Y9–83553–00	3 – 10
	4 – 10
6YM–83553–00	3 – 7
	4 – 7
6Y8–83553–02	3 – 5
	4 – 5
6YM–83710–14	5 – 1
6YM–83956–00	5 – 3

PART NO. N° PIECES	REF. NO.
6YD–83957–00	5 – 4
6Y8–85371–01	3 – 9
	4 – 9
6YM–87278–00	5 – 6
6X9–88107–01	3 – 14
	4 – 14
6JM–W2810–00	2 – 19
6JM–W4260–00–P0	1 – 1
6JM–W4272–00	6 – 6
6JM–W450A–00–P0	2 – 1
6JM–W511A–00–P0	2 – 14
6JM–W82A0–00	7 – 1
90101–06020	2 – 5
90101–08M88	2 – 15
90152–05M02	2 – 7
90159–06M03	8 – 2
90171–10M01	2 – 9
90185–08057	2 – 17
90201–08MA4	2 – 18
90201–10M01	2 – 10
90201–17M00	2 – 8
92990–08600	2 – 16
92990–10100	2 – 12
92995–10600	2 – 11
97E95–06510	2 – 4

PART NO. N° PIECES	REF. NO.

PART NO. N° PIECES	REF. NO.

PART NO. N° PIECES	REF. NO.