YAMAHA

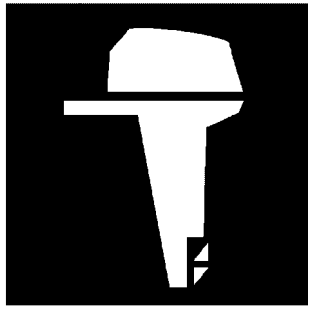

PARTS CATALOGUE

LF115B-2022 (6EL9)

YAMAHA GENUINE Parts & Accessories

1W6EL-100EA

( )

LF115B
PARTS CATALOGUE
©2022 by Yamaha Motor Co., Ltd.
1st edition, January 2022
All rights reserved.
Any reprinting or unauthorized use
without the written permission of
Yamaha Motor Co., Ltd.
is expressly prohibited.
Printed in Japan.

FOREWORD

This Parts Catalogue is related to the parts for the model(s) on the cover page. When you are ordering replacement parts, please refer to this Parts Catalogue and quote both part numbers and part names correctly.

1. Modifications or additions which have been made after the issue of the Parts Catalogue will be announced in the Parts News.
   It is advisable that you make the necessary corrections to the Parts Catalogue according to the Parts News.

2. Abbreviations
   The following abbreviations are used in this Parts Catalogue.
   "UR" Use specified parts number.
   "UN" Use as many as needed.
   "AP" Alternate Parts
   "LM" Locally Made (Parts need to be ordered locally)
   "F#" Frame No. (Applicable machine No.)
   "O/S" Over Size

3. The number of components for assembly
   - Parts, which are to be supplied in an assembly, are listed with a dot (.) in front of the part name as shown below.
   - The numeral appearing to the right of each component part indicates the quantity of parts for each assembly unit.

PART NO.	DESCRIPTION	Q'TY	REMARKS
2F5–83310–60	FRONT FLASHER LIGHT ASSY	2	
115–83311–60	.BULB (6V–18W)	1	

4. Applicable colours of graphics are represented in the "REMARKS" as shown below.

PART NO.	DESCRIPTION	Q'TY	REMARKS
2N4–24110–00–X5	FUEL TANK COMP.	2	MXR
3J1–24240–10	.GRAPHIC, FUEL TANK	1	FOR MXR

5. Note that the illustrations for reference in finding parts numbers are not to be used for assembling. When assembling, please use the applicable service manual.

6. The asterisk (*) before a reference number indicates modified items after the first edition.

7. Applicable Serial No.
   Engine Serial No.

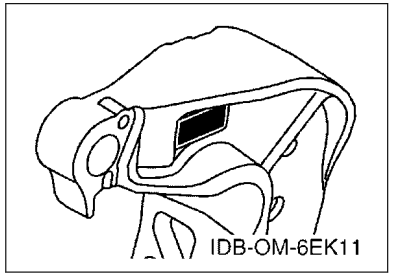

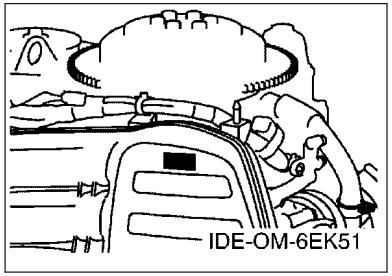

8. Applicable Engine Starting Serial No.

Model	Serial No.	Model	Serial No.
LF115B	6EL-1003053		

9. Applicable Colour Code

Abbreviation	Colour Name	Colour Code
DBN1	DARK BLUISH GRAY 1	008D

10. Quantity Column Information

Column No.	Name Of Q'ty Column	Applicable Model
1	XB	LF115XB
2	XB2	LF115XB2

CONTENTS

SCHEDULED SERVICE PARTS.....1
TOP COWLING.....2
CYLINDER & CRANKCASE 1.....3
CRANKSHAFT & PISTON.....5
CYLINDER & CRANKCASE 2.....7
VALVE.....9
INTAKE 1.....11
INTAKE 2.....13
INTAKE 3.....14
FUEL INJECTION PUMP 1.....15
FUEL INJECTION PUMP 2.....17
EXHAUST.....18
FUEL 1.....19
FUEL 2.....21
GENERATOR.....22
ELECTRICAL 1.....23
ELECTRICAL 2.....24
ELECTRICAL 3.....25
ELECTRICAL 4.....26
ELECTRICAL 5.....27
STARTING MOTOR.....28
BOTTOM COWLING 1.....29
BOTTOM COWLING 2.....31
CONTROL.....32
BRACKET 1.....34
BRACKET 2.....36
POWER TRIM & TILT ASSY 1.....38
POWER TRIM & TILT ASSY 2.....41
UPPER CASING.....42
OIL PAN.....44
LOWER CASING & DRIVE 1.....45
LOWER CASING & DRIVE 2.....49
OPTIONAL PARTS 1.....50
OPTIONAL PARTS 2.....51
REPAIR KIT 1.....52
REPAIR KIT 2.....53

INDEX

NUMERICAL INDEX.....55

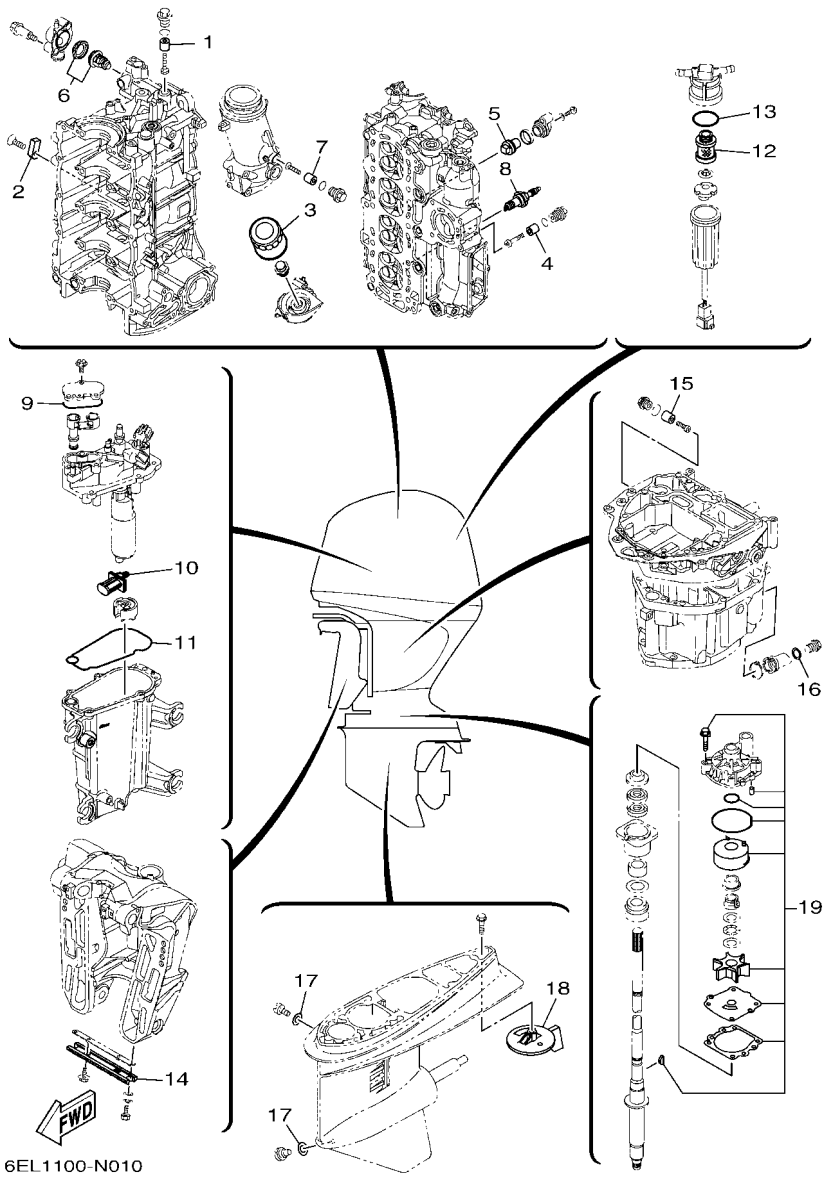

FIG. 1 SCHEDULED SERVICE PARTS

REF. NO.	PART NO.	DESCRIPTION	XB	XB2				REMARKS
1	6G8–11325–00	ANODE	1	1				
2	63P–11325–01	ANODE	1	1				
3	5GH–13440–71	ELEMENT ASSY, OIL CLEANER	1	1				
4	6G8–11325–00	ANODE	1	1				
5	67F–11325–01	ANODE	1	1				
6	6EK–12411–00	THERMOSTAT	1	1				
7	6EK–11325–00	ANODE	1	1				
8	94702–00437	PLUG, SPARK (NGK LKR6E)	4	4				
9	6CB–13016–00	O-RING	1	1				
10	63P–13915–00	FILTER	1	1				
11	6CB–14984–00	GASKET, FLOAT CHAMBER	1	1				
12	6D8–24563–00	ELEMENT, FILTER	1	1				
13	6D8–24564–00	GASKET	1	1				
14	6H1–45251–03	ANODE	1	1				
15	6G8–11325–00	ANODE	1	1				
16	90430–14M09	GASKET	1	1				
17	90430–08003	GASKET	2	2				
18	6L6–45371–00	TAB-TRIM	1	1				
19	68V–W0078–01	WATER PUMP REPAIR KIT	1	1				

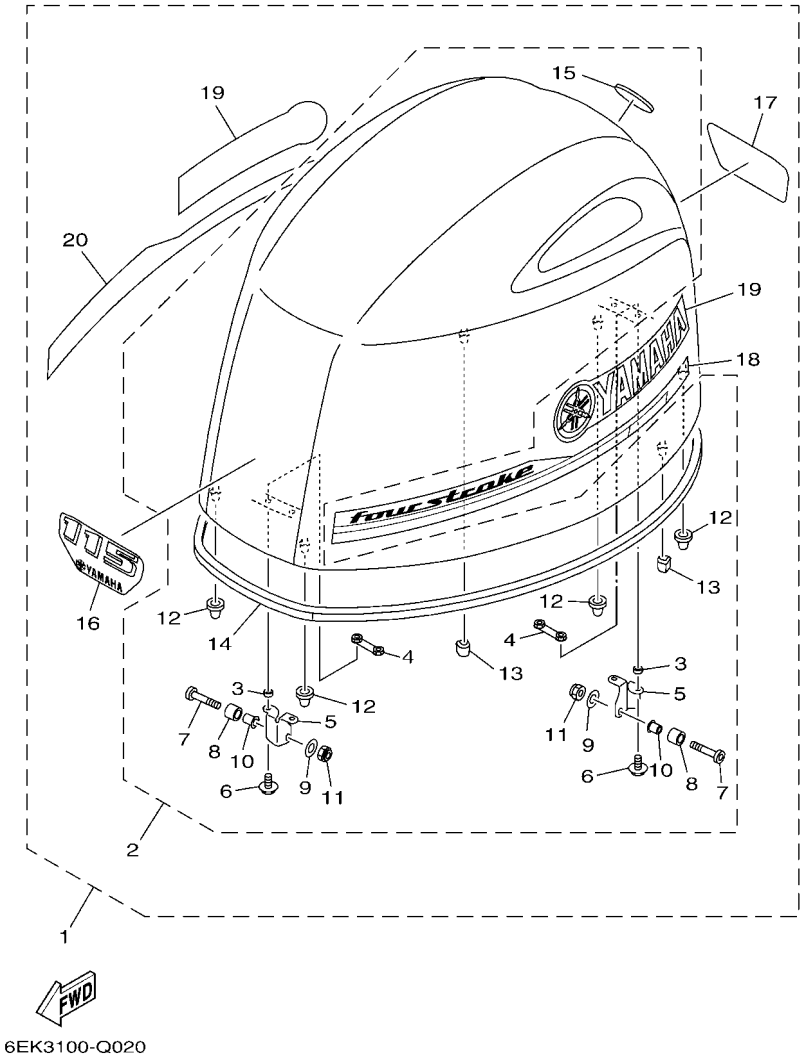

6EK3100-Q020

FIG. 2 TOP COWLING

REF. NO.	PART NO.	DESCRIPTION	XB	XB2				REMARKS
1	6EK–42610–02	TOP COWLING ASSY	1					
	6EK–42610–31–CE	TOP COWLING ASSY		1				WHITE
2	6EK–4261A–02	.TOP COWLING W/O GRAPHICS	1					
	6EK–4261A–02–CE	.TOP COWLING W/O GRAPHICS		1				WHITE
3	90387–07046	..COLLAR	4	4				
4	6EK–42646–00	..PLATE, CLAMP	2	2				
5	6EK–42647–00	..HOLDER, CLAMP BAND	2	2				
6	90105–06039	..BOLT, FLANGE	4	4				
7	90111–08078	..BOLT,HEX. SOCKET BUTTON	2	2				
8	90387–10094	..COLLAR	2	2				
9	92990–08600	..WASHER, PLATE	2	2				
10	90387–08M45	..COLLAR	2	2				
11	95780–08300	..NUT, FLANGE	2	2				
12	68F–42663–01	..DAMPER 2	4	4				
13	6EK–42662–01	..DAMPER	2	2				
14	6EK–42615–01	..SEAL	1	1				
15	6DA–42697–00	..TUNING FORK MARK	1	1				
16	68V–42677–30	.GRAPHIC, FRONT	1					
	6EK–42677–00	.GRAPHIC, FRONT		1				FOR WHITE COWLING
17	68V–42678–41	.GRAPHIC, REAR	1					
	6EK–42678–00	.GRAPHIC, REAR		1				FOR WHITE COWLING
18	6EK–42675–00	.GRAPHIC, SIDE 1	1					
	6EK–42675–10	.GRAPHIC, SIDE 1		1				FOR WHITE COWLING
19	6D6–42681–00	.MARK, COWLING	2					
	6EK–42681–00	.MARK, COWLING		2				FOR WHITE COWLING
20	6EK–42676–00	.GRAPHIC, SIDE 2	1					
	6EK–42676–10	.GRAPHIC, SIDE 2		1				FOR WHITE COWLING

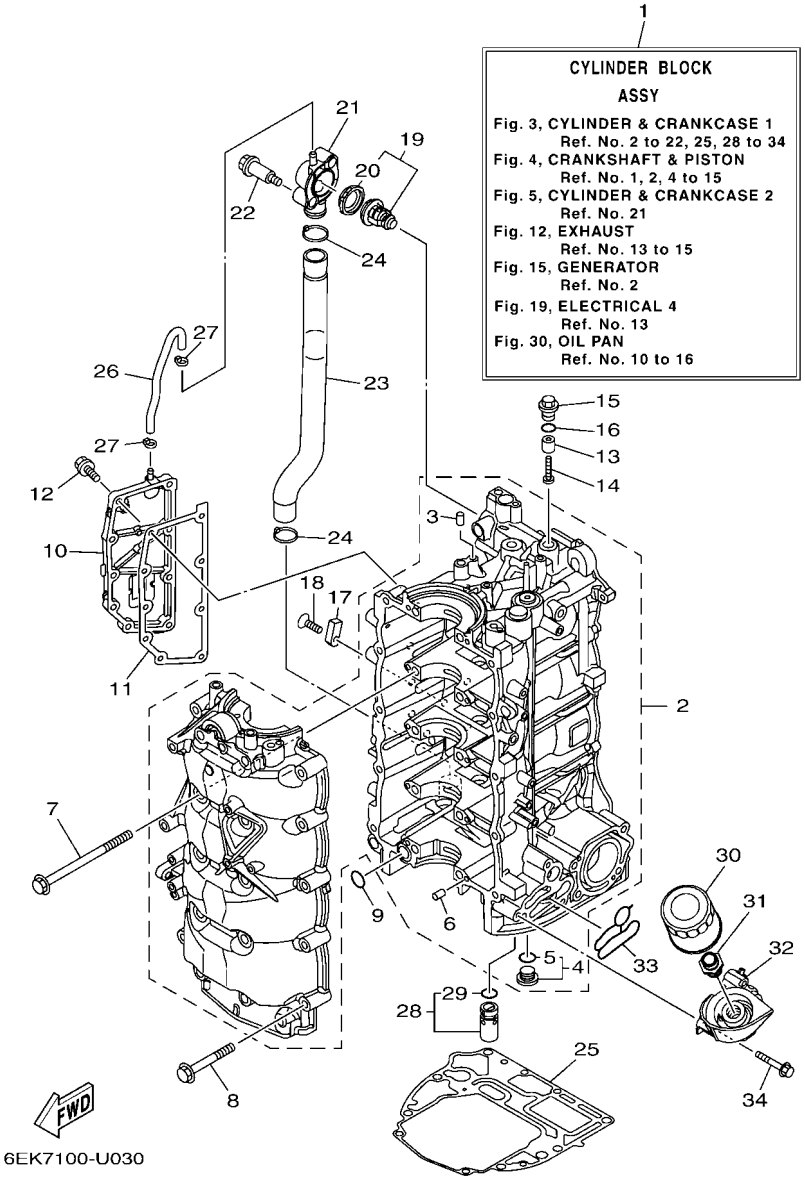

FIG. 3 CYLINDER & CRANKCASE 1

REF. NO.	PART NO.	DESCRIPTION	XB	XB2				REMARKS
1	6EK–W009B–13–9S	CYLINDER BLOCK ASSY	1	1				
2	6EK–15109–02–9S	CRANKCASE ASSY	1	1				
3	93606–19M23	.PIN, DOWEL	1	1				
4	6EK–11313–00	.PLUG, BLIND	1	1				
5	93210–207A0	..O-RING	1	1				
6	93606–12019	.PIN, DOWEL	10	10				
7	90119–10057	BOLT, WITH WASHER	10	10				
8	90105–08170	BOLT, FLANGE	10	10				
9	93210–19MJ1	O-RING	1	1				
10	6EK–15414–00–9S	COVER 1	1	1				
11	6EK–15353–01	GASKET, DRAIN	1	1				
12	90105–06037	BOLT, FLANGE	9	9				
13	6G8–11325–00	ANODE	1	1				
14	98980–05025	SCREW, BIND	1	1				
15	6G8–11197–A0	PLUG, BLIND	1	1				
16	93210–13M63	O-RING	1	1				
17	63P–11325–01	ANODE	1	1				
18	90151–06M02	SCREW, COUNTERSUNK	1	1				
19	6EK–12411–00	THERMOSTAT	1	1				
20	6EK–12412–00	.SEAL, THERMOSTAT	1	1				
21	6EK–12413–00	COVER, THERMOSTAT	1	1				
22	90109–06286	BOLT	2	2				
23	6EK–1243A–00	HOSE 1	1	1				
24	90465–11M59	CLAMP	2	2				
25	6EK–11351–00	GASKET, CYLINDER	1	1				
26	6EK–12483–00	PIPE 3	1	1				
27	90465–11M10	CLAMP	2	2				

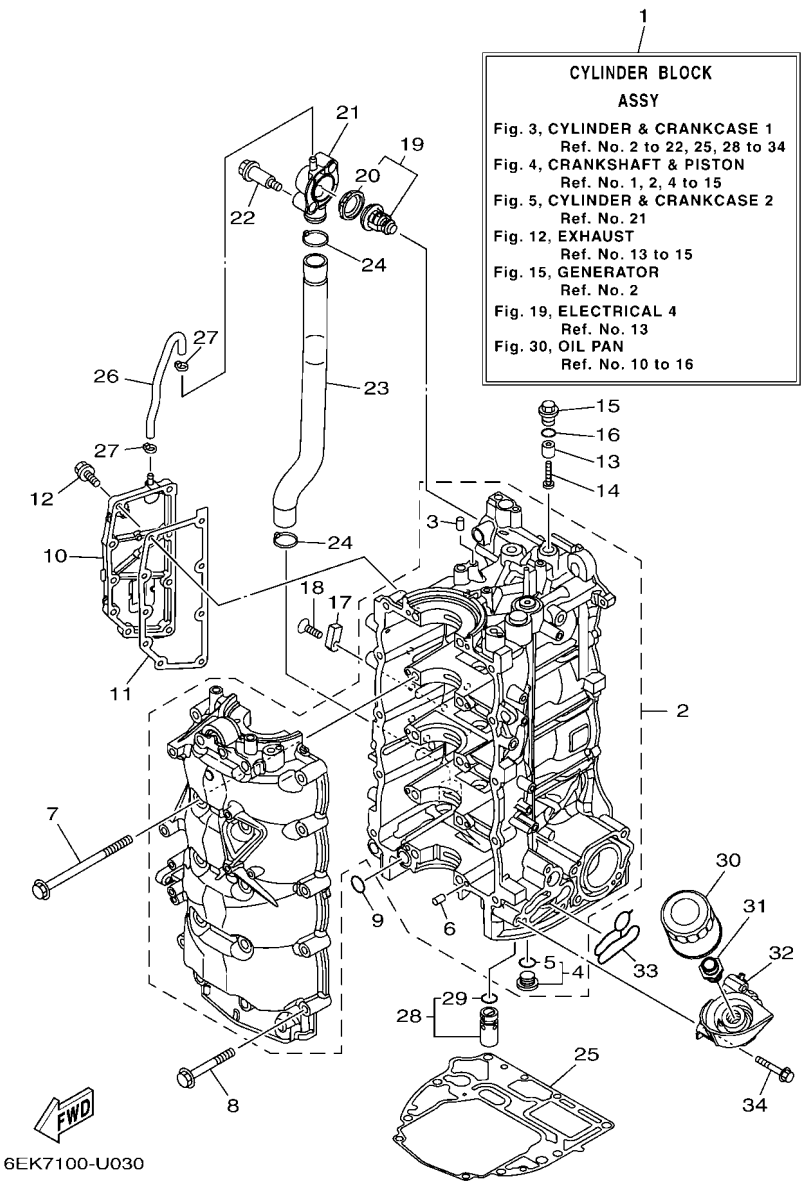

FIG. 3 CYLINDER & CRANKCASE 1

REF. NO.	PART NO.	DESCRIPTION	XB	XB2				REMARKS
28	6EK–13490–00	RELIEF VALVE ASSY	1	1				
29	6CB–13473–00	.O-RING	1	1				
30	5GH–13440–71	ELEMENT ASSY, OIL CLEANER	1	1				
31	90401–20007	BOLT, UNION	1	1				
32	6EK–13446–00	CONNECTOR	1	1				
33	6EK–13475–00	GASKET	1	1				
34	90105–06151	BOLT, FLANGE	3	3				

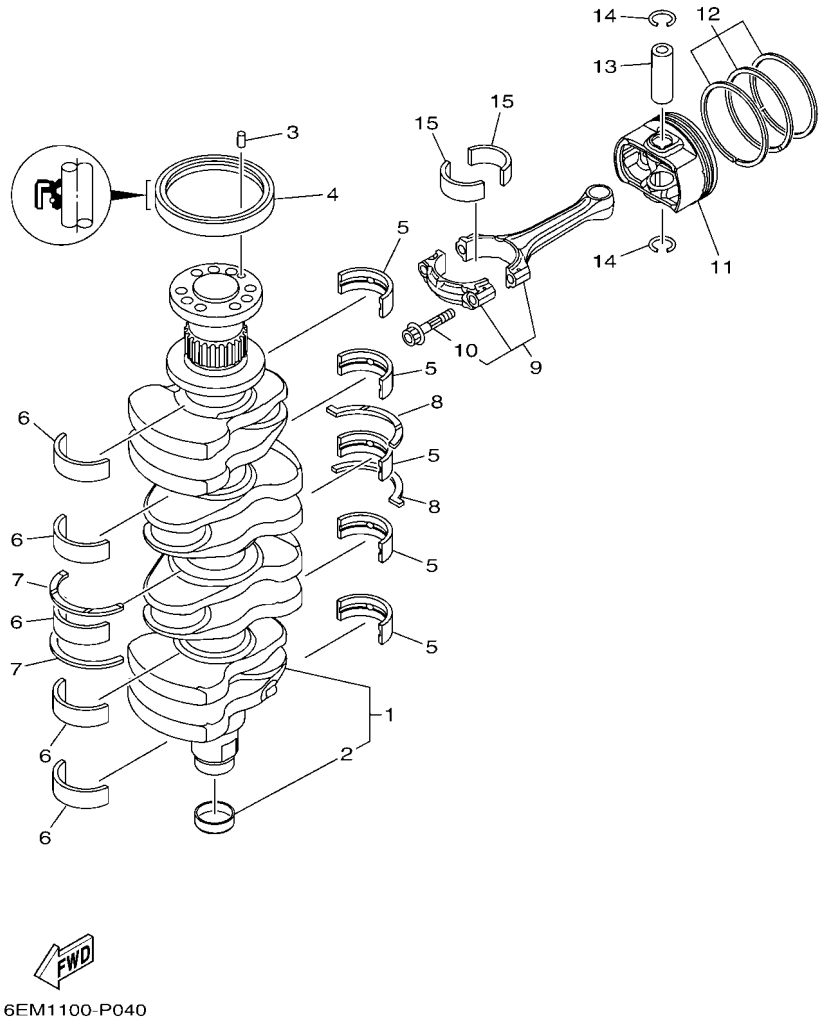

FIG. 4 CRANKSHAFT & PISTON

REF. NO.	PART NO.	DESCRIPTION	XB	XB2				REMARKS
1	6EK–11410–01	CRANKSHAFT	1	1				
2	6CB–11478–00	.COLLAR	1	1				
3	93606–12019	PIN, DOWEL	1	1				
4	93102–85008	OIL SEAL	1	1				
5	6EK–11416–00	PLANE BEARING, CRANKSHAFT 1	5	5				UR YELLOW
	6EK–11416–10	PLANE BEARING, CRANKSHAFT 1	5	5				UR GREEN
	6EK–11416–20	PLANE BEARING, CRANKSHAFT 1	5	5				UR BLUE
	6EK–11416–30	PLANE BEARING, CRANKSHAFT 1	5	5				UR RED
	6EK–11416–40	PLANE BEARING, CRANKSHAFT 1	5	5				UR BLACK
6	6EK–11417–00	PLANE BEARING, CRANKSHAFT 2	5	5				UR YELLOW
	6EK–11417–10	PLANE BEARING, CRANKSHAFT 2	5	5				UR GREEN
	6EK–11417–20	PLANE BEARING, CRANKSHAFT 2	5	5				UR BLUE
	6EK–11417–30	PLANE BEARING, CRANKSHAFT 2	5	5				UR RED
	6EK–11417–40	PLANE BEARING, CRANKSHAFT 2	5	5				UR BLACK
7	6EK–11426–01	BEARING, THRUST 1	2	2				
8	6EK–11427–00	BEARING, THRUST 2	2	2				
9	6EK–W1165–00	CONNECTING ROD ASSY	4	4				
10	K1C–A3275–00	.BOLT, CONNECTING ROD	2	2				
11	6EK–11631–02–94	PISTON (STD)	4	4				
	6EK–11635–02	PISTON (0.25MM O/S)	4	4				AP
12	6EK–11603–01	PISTON RING SET (STD)	4	4				
	6EK–11604–01	PISTON RING SET (0.25MM O/S)	4	4				AP
13	6EK–11633–00	PIN, PISTON	4	4				
14	93450–19052	CIRCLIP	8	8				
15	6EK–11656–00	PLANE BEARING, CONNECTING ROD	8	8				UR YELLOW
	6EK–11656–10	PLANE BEARING, CONNECTING ROD	8	8				UR GREEN
	6EK–11656–20	PLANE BEARING, CONNECTING ROD	8	8				UR BLUE

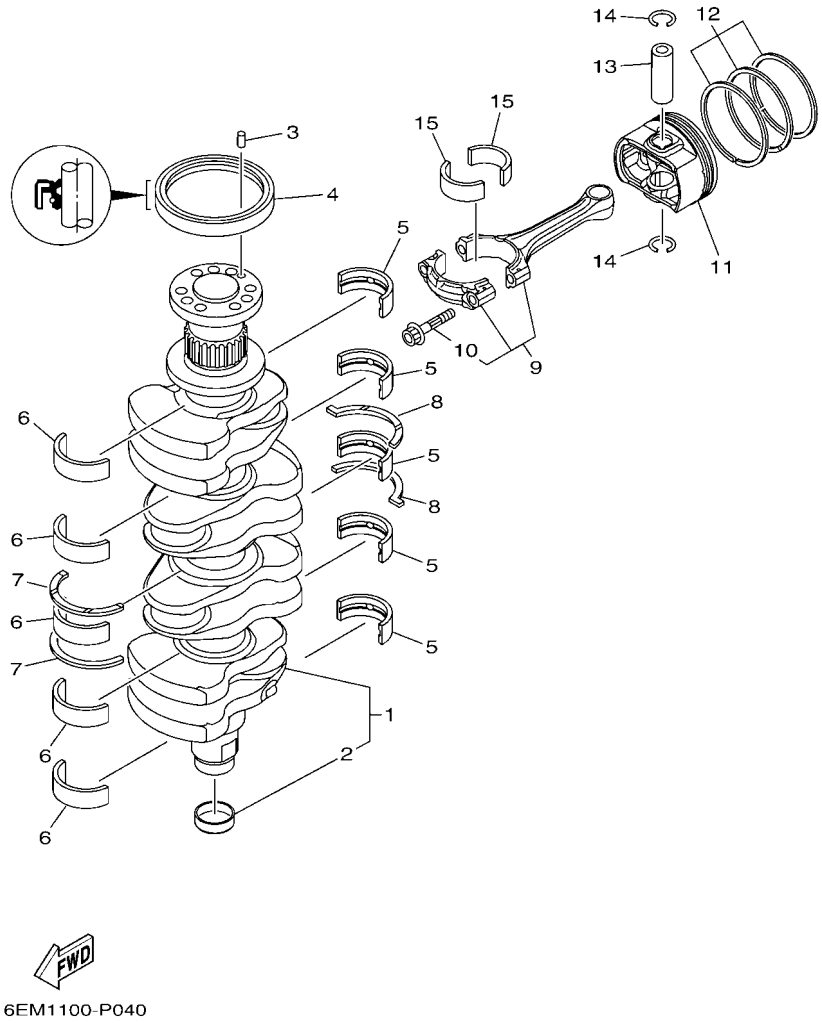

FIG. 4 CRANKSHAFT & PISTON

REF. NO.	PART NO.	DESCRIPTION	XB	XB2				REMARKS
15	6EK–11656–30	PLANE BEARING, CONNECTING ROD	8	8				UR RED
	6EK–11656–40	PLANE BEARING, CONNECTING ROD	8	8				UR BLACK

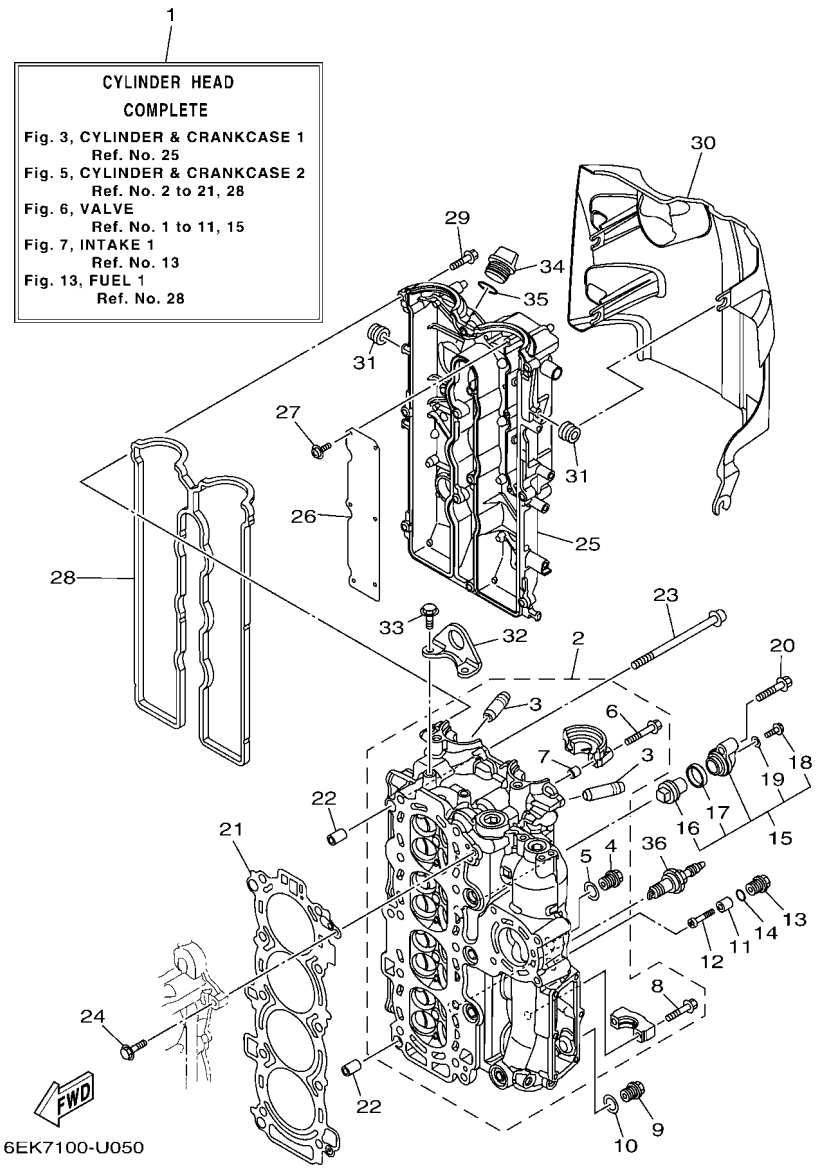

FIG. 5 CYLINDER & CRANKCASE 2

REF. NO.	PART NO.	DESCRIPTION	XB	XB2				REMARKS
1	6EK–W009A–02–9S	CYLINDER HEAD COMPLETE	1	1				
2	6EK–11110–00–9S	CYLINDER HEAD ASSY	1	1				
3	6DA–11133–10	.GUIDE, VALVE 1	16	16				
4	90340–18M09	.PLUG, STRAIGHT SCREW	1	1				
5	90201–186F1	.WASHER, PLATE	1	1				
6	90119–07235	.BOLT/WASHER-CAM CAPS	4	4				
7	91809–08006	.PIN, DOWEL	4	4				
8	90119–07234	.BOLT, WITH WASHER	16	16				
9	90340–14M06	PLUG, STRAIGHT SCREW	1	1				
10	90430–14115	GASKET	1	1				
11	6G8–11325–00	ANODE	1	1				
12	98980–05025	SCREW, BIND	1	1				
13	6G8–11197–A0	PLUG, BLIND	1	1				
14	93210–13M63	O-RING	1	1				
15	69J–11301–01	ANODE COVER ASSY	1	1				
16	67F–11325–01	.ANODE	1	1				
17	67F–11328–01	.GROMMET, ANODE	1	1				
18	90105–06M07	.BOLT, FLANGE	1	1				
19	90430–06M03	.GASKET	1	1				
20	95D75–08040	BOLT, FLANGE DEEP RECESS	1	1				
21	6EK–11181–00	GASKET, CYLINDER HEAD 1	1	1				
22	99530–14016	PIN, DOWEL	2	2				
23	90149–10072	SCREW	10	10				
24	90105–06037	BOLT, FLANGE	1	1				
25	6EK–11191–10	COVER, CYLINDER HEAD 1	1	1				
26	6EK–11168–00	COVER, BREATHER	1	1				
27	97607–04208	SCREW, WITH WASHER	6	6				

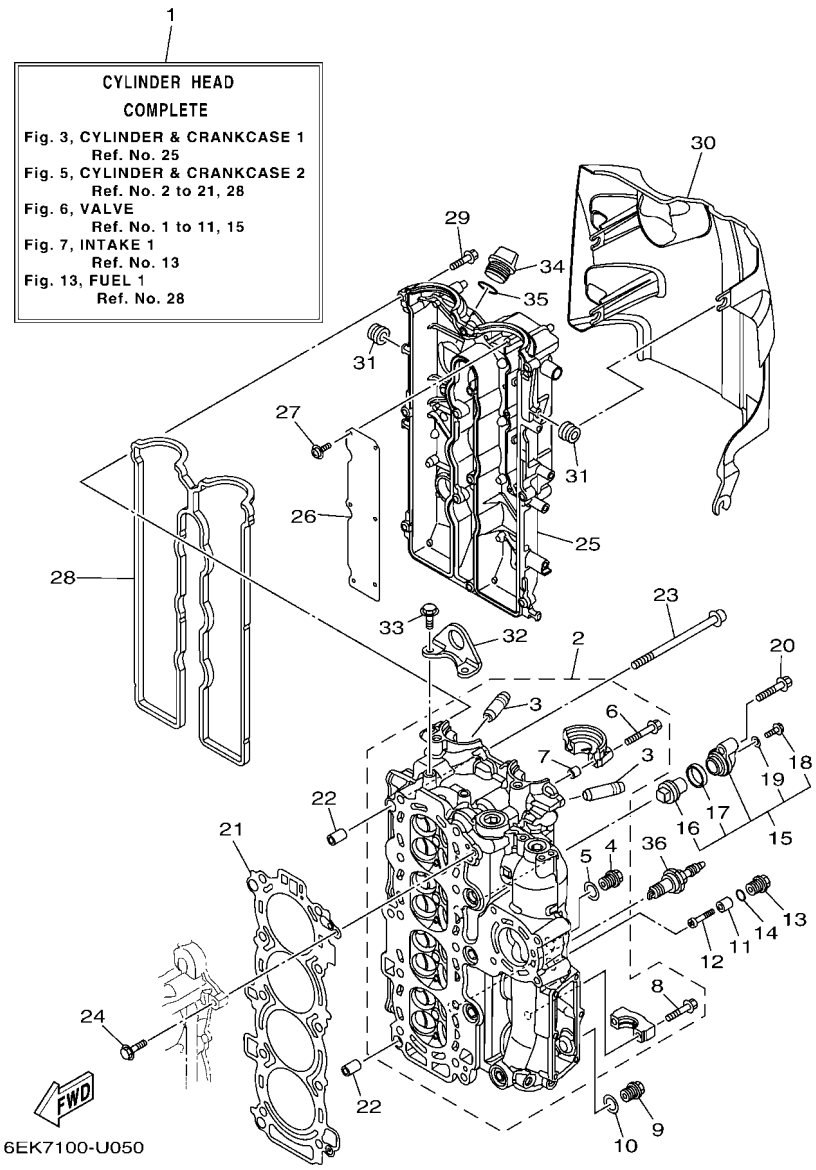

FIG. 5 CYLINDER & CRANKCASE 2

REF. NO.	PART NO.	DESCRIPTION	XB	XB2				REMARKS
28	6EK–11193–00	GASKET, HEAD COVER 1	1	1				
29	95D95–06030	BOLT, FLANGE DEEP RECESS	12	12				
30	6EK–11192–01	COVER, CYLINDER HEAD 2	1	1				
31	90480–12314	GROMMET	4	4				
32	6EK–11119–00	HANGER, ENGINE	1	1				
33	95D95–08020	BOLT, FLANGE DEEP RECESS	2	2				
34	6G8–15363–00	PLUG, OIL	1	1				
35	93210–24M79	O-RING	1	1				
36	94702–00437	PLUG, SPARK (NGK LKR6E)	4	4				

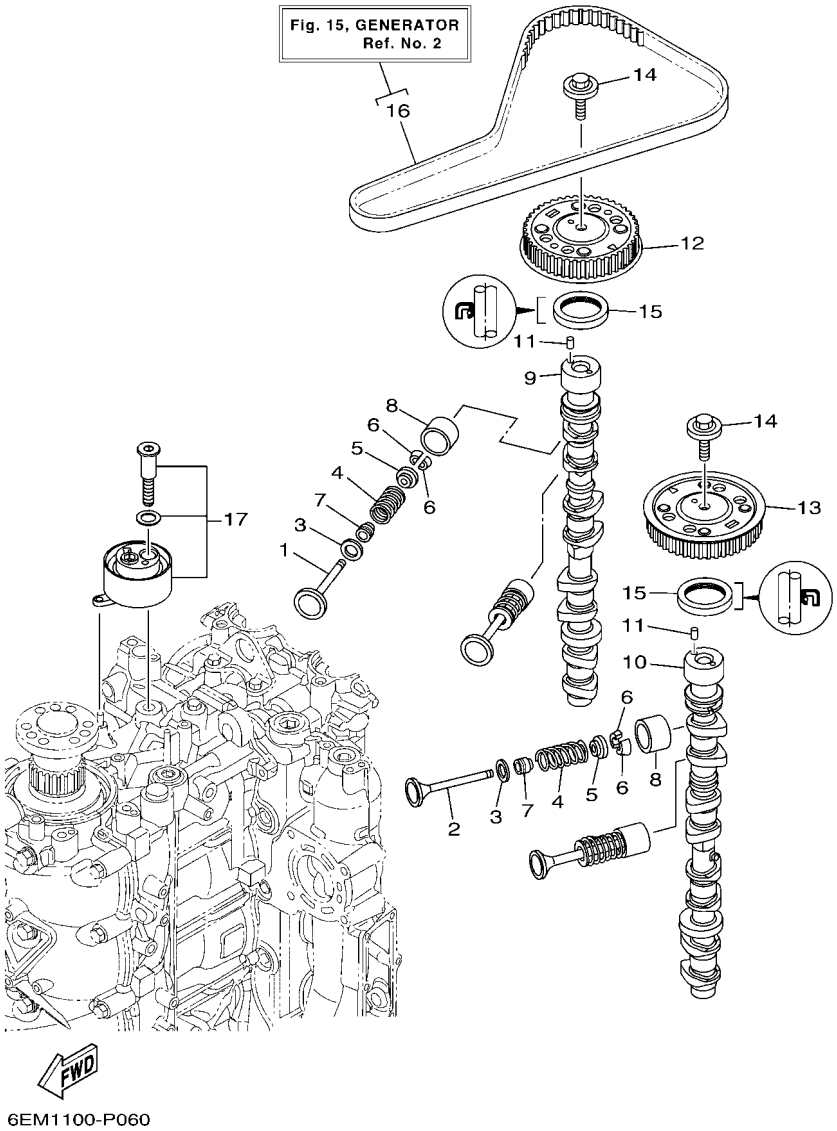

FIG. 6 VALVE

REF. NO.	PART NO.	DESCRIPTION	XB	XB2				REMARKS
1	6EK–12111–00	VALVE, INTAKE	8	8				
2	6EK–12121–00	VALVE, EXHAUST	8	8				
3	62Y–12116–00	SEAT, VALVE SPRING	16	16				
4	30X–12114–00	SPRING, VALVE OUTER	16	16				
5	30X–12117–00	RETAINER, VALVE SPRING	16	16				
6	30X–12118–00	LOCK, VALVE SPRING RETAINER	32	32				
7	51Y–12119–00	SEAL, VALVE STEM	16	16				
8	6D8–12153–00	LIFTER, VALVE (12)	16	16				UR
	6D8–12153–10	LIFTER, VALVE (14)	16	16				UR
	6D8–12153–20	LIFTER, VALVE (16)	16	16				UR
	6D8–12153–30	LIFTER, VALVE (18)	16	16				UR
	6D8–12153–40	LIFTER, VALVE (20)	16	16				UR
	6D8–12153–50	LIFTER, VALVE (22)	16	16				UR
	6D8–12153–60	LIFTER, VALVE (24)	16	16				UR
	6D8–12153–70	LIFTER, VALVE (26)	16	16				UR
	6D8–12153–80	LIFTER, VALVE (28)	16	16				UR
	6D8–12153–90	LIFTER, VALVE (30)	16	16				UR
	6D8–12153–A0	LIFTER, VALVE (32)	16	16				UR
	6D8–12153–B0	LIFTER, VALVE (34)	16	16				UR
	6D8–12153–C0	LIFTER, VALVE (36)	16	16				UR
	6D8–12153–D0	LIFTER, VALVE (38)	16	16				UR
	6D8–12153–E0	LIFTER, VALVE (40)	16	16				UR
	6D8–12153–F0	LIFTER, VALVE (42)	16	16				UR
	6D8–12153–G0	LIFTER, VALVE (44)	16	16				UR
	6D8–12153–H0	LIFTER, VALVE (46)	16	16				UR
	6D8–12153–J0	LIFTER, VALVE (48)	16	16				UR
	6D8–12153–K0	LIFTER, VALVE (50)	16	16				UR

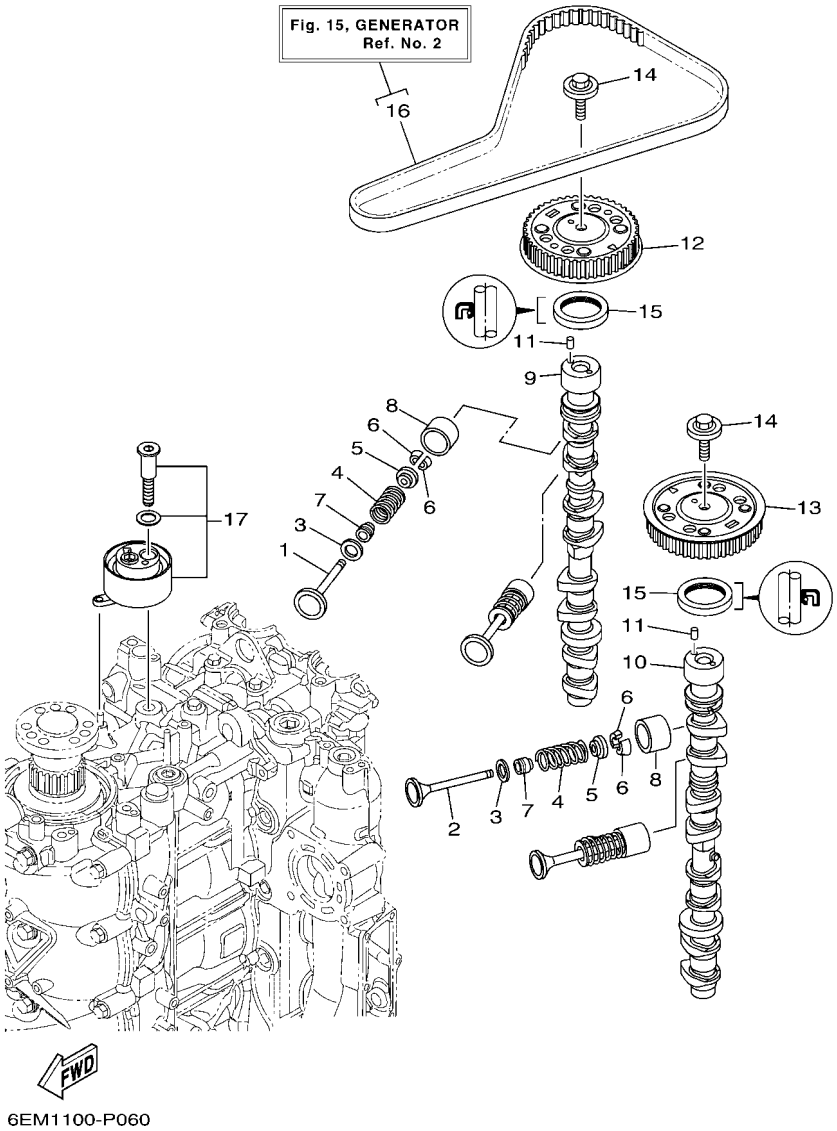

FIG. 6 VALVE

REF. NO.	PART NO.	DESCRIPTION	XB	XB2				REMARKS
8	6D8–12153–L0	LIFTER, VALVE (52)	16	16				UR
	6D8–12153–M0	LIFTER, VALVE (54)	16	16				UR
	6D8–12153–N0	LIFTER, VALVE (56)	16	16				UR
	6D8–12153–P0	LIFTER, VALVE (58)	16	16				UR
	6D8–12153–R0	LIFTER, VALVE (60)	16	16				UR
	6D8–12153–S0	LIFTER, VALVE (62)	16	16				UR
	6D8–12153–T0	LIFTER, VALVE (64)	16	16				UR
	6D8–12153–U0	LIFTER, VALVE (66)	16	16				UR
	6D8–12153–V0	LIFTER, VALVE (68)	16	16				UR
9	6EK–12171–00	CAMSHAFT 1	1	1				
10	6EK–12181–00	CAMSHAFT 2	1	1				
11	93605–10108	PIN, DOWEL	2	2				
12	6EK–11537–00	GEAR, DRIVEN	1	1				
13	6EK–11567–00	GEAR, DRIVEN 2	1	1				
14	90119–10050	BOLT, WITH WASHER	2	2				
15	93102–38008	OIL SEAL	2	2				
16	6EK–W4624–00	BELT (WITH ROTOR BOLTS)	1	1				
17	6EK–11590–01	TENSIONER ASSY	1	1				

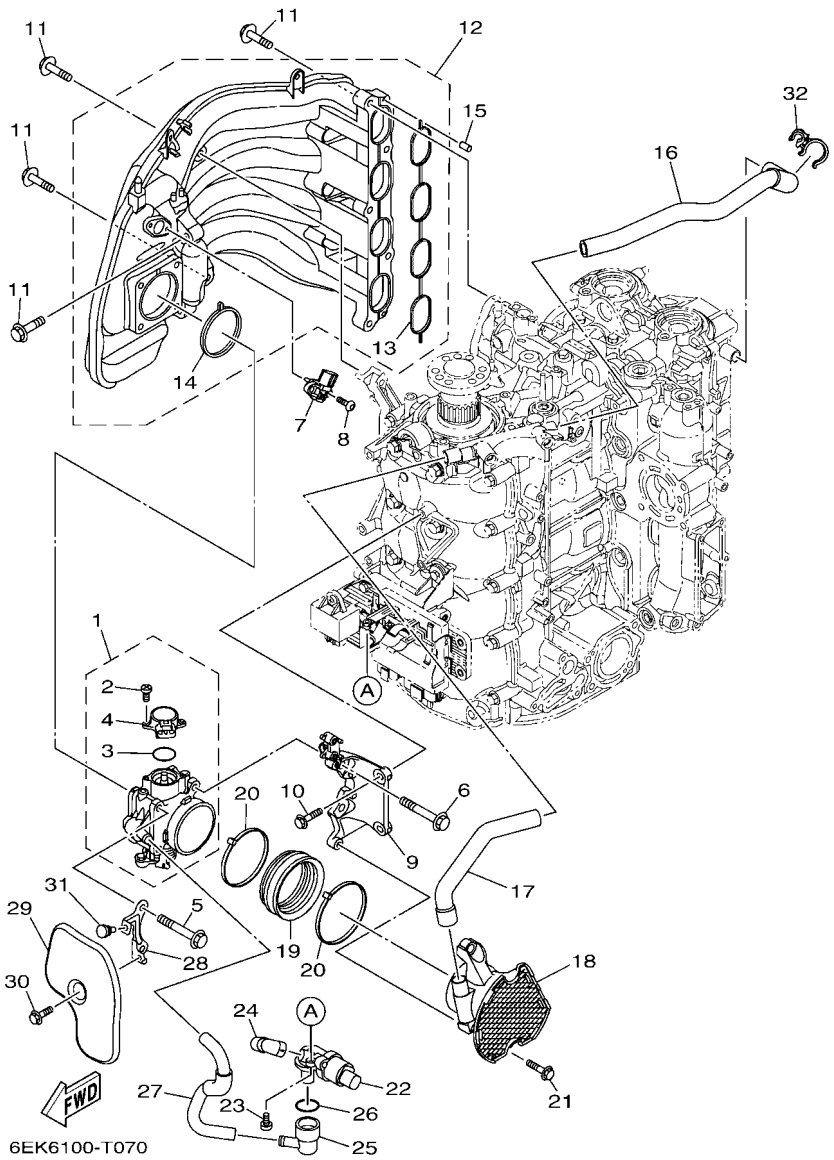

FIG. 7 INTAKE 1

REF. NO.	PART NO.	DESCRIPTION	XB	XB2				REMARKS
1	6EK–13751–00	BODY, THROTTLE 1	1	1				
2	6C5–81145–00	.SCREW 1	2	2				
3	6C5–8182L–00	.O-RING 1	1	1				
4	6C5–85885–00	.THROTTLE SENSOR ASSY	1	1				
5	95D75–08060	BOLT, FLANGE DEEP RECESS	2	2				
6	90105–08186	BOLT, FLANGE	2	2				
7	68F–83688–10	SENSOR ASSY	1	1				
8	90111–05037	BOLT,HEX. SOCKET BUTTON	2	2				
9	6EK–13152–02	STAY 2	1	1				
10	95D75–06025	BOLT, FLANGE DEEP RECESS	2	2				
11	90119–08022	BOLT, WITH WASHER	9	9				
12	6EK–13641–01	MANIFOLD, INTAKE 1	1	1				
13	6EK–13645–00	.GASKET, MANIFOLD 1	1	1				
14	6EK–13646–00	.GASKET, MANIFOLD 2	1	1				
15	91690–50014	PIN, SPRING	2	2				
16	6EK–15373–10	PIPE, BREATHER	1	1				
17	6EK–15393–00	PIPE, BREATHER 2	1	1				
18	6DA–14440–00	SILENCER ASSY, INTAKE	1	1				
19	6P2–1441J–01	PIPE, SILENCER	1	1				
20	90464–99004	CLAMP	2	2				
21	95D75–06025	BOLT, FLANGE DEEP RECESS	2	2				
22	6C5–13713–02	VALVE, IDLE SPEED CONTROL	1	1				
23	97980–05214	SCREW, WITH WASHER	2	2				
24	68V–13897–00	PIPE, AIR	1	1				
25	6CJ–11372–00	NIPPLE, HOSE	1	1				
26	93210–33003	O-RING	1	1				
27	6EK–13543–00	HOSE, AIR	1	1				

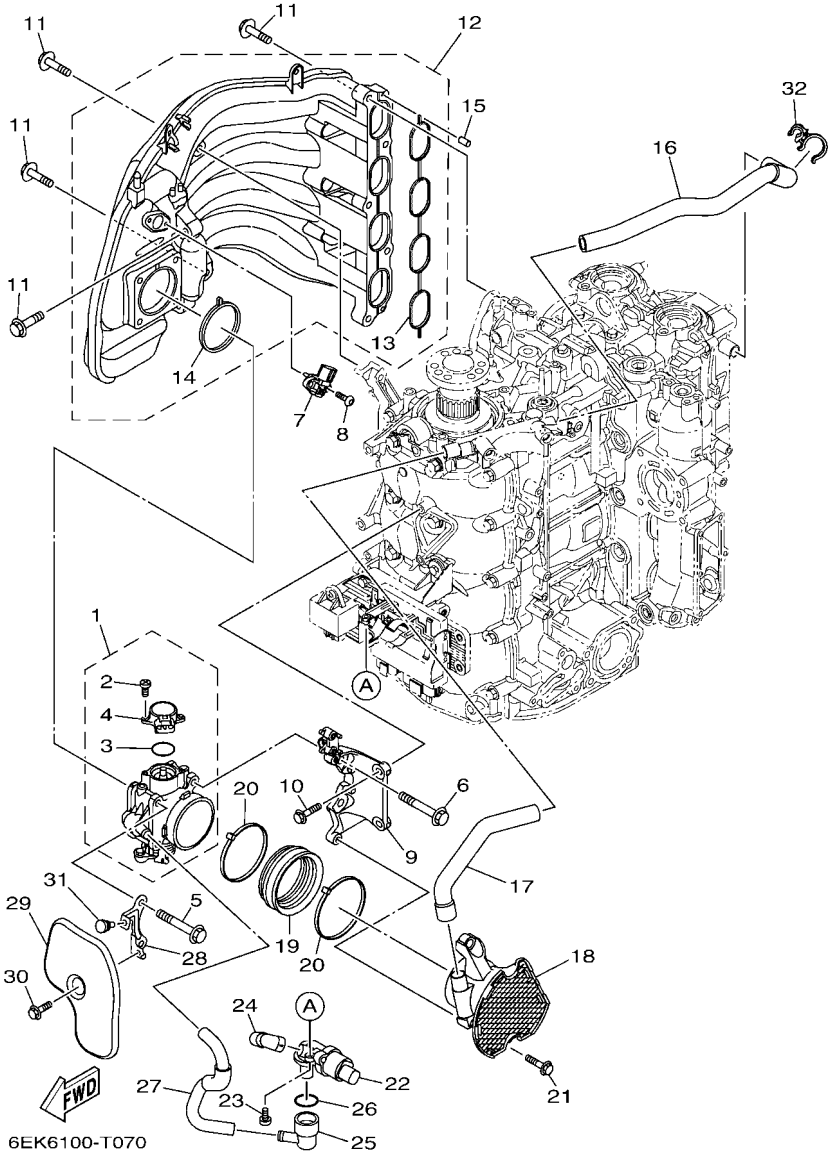

FIG. 7 INTAKE 1

REF. NO.	PART NO.	DESCRIPTION	XB	XB2				REMARKS
28	6EK–13843–00	PLATE 1	1	1				
29	6EK–13881–01	COVER 1	1	1				
30	95D95–06016	BOLT, FLANGE DEEP RECESS	1	1				
31	90480–06M19	GROMMET	1	1				
32	90464–21002	CLAMP	1	1				

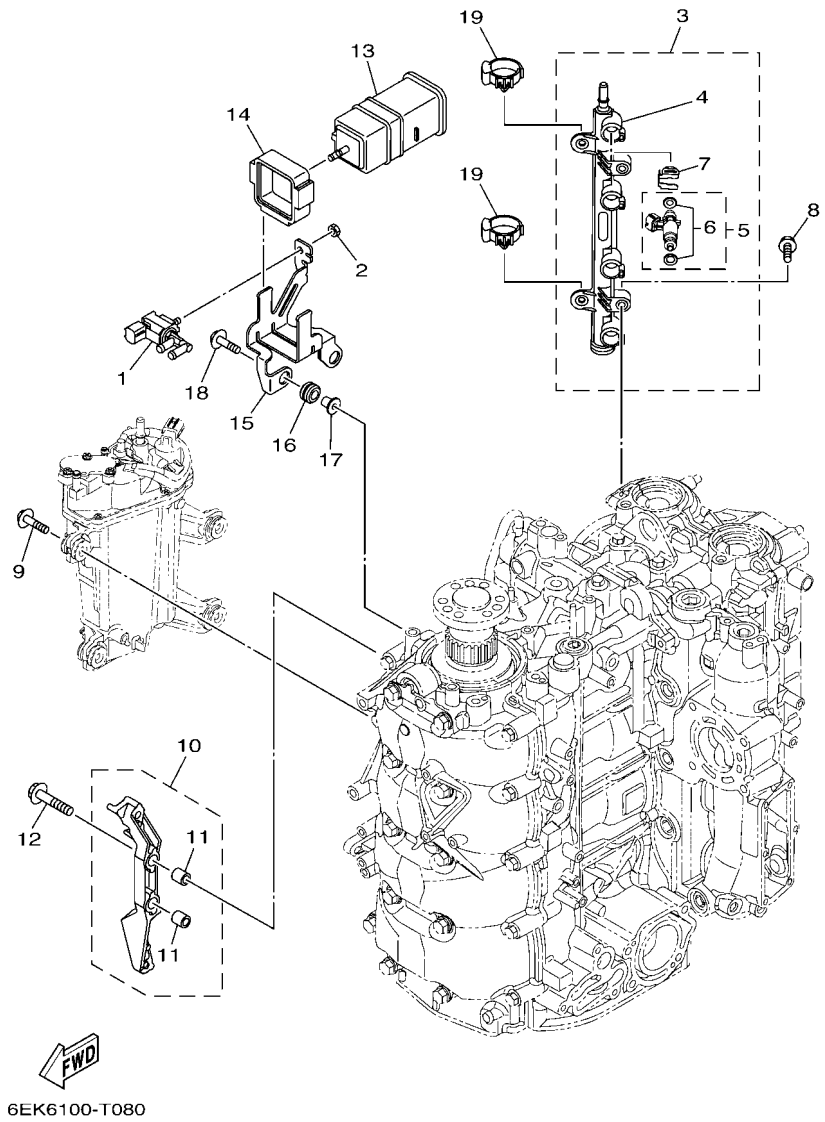

FIG. 8 INTAKE 2

REF. NO.	PART NO.	DESCRIPTION	XB	XB2				REMARKS
1	6C5–86120–00	SOLENOID VALVE ASSY	1	1				
2	95380–06600	NUT, HEXAGON	1	1				
3	6EK–13160–01	DELIVERY PIPE ASSY 1	1	1				
4	6EK–13161–01	.PIPE, DELIVERY 1	1	1				
5	6EK–13761–01	.INJECTOR	4	4				
6	6AW–1410B–00	..PACKING KIT	1	1				
7	6AW–13577–10	.CLIP	4	4				
8	90105–06M08	BOLT, FLANGE	2	2				
9	90119–06299	BOLT, WITH WASHER	4	4				
10	6EK–14291–00	BRACKET 1	1	1				
11	99590–10114	.PIN, DOWEL	2	2				
12	90105–08M87	BOLT, FLANGE	2	2				
13	6P2–24170–00	CANISTER ASSY	1	1				
14	6FP–2419E–01	COVER, CANISTER	1	1				
15	6EK–2134X–10	BRACKET, CANISTER	1	1				
16	90480–10M23	GROMMET	2	2				
17	90387–06289	COLLAR	2	2				
18	90119–06309	BOLT, WITH WASHER	2	2				
19	90464–07209	CLAMP	2	2				

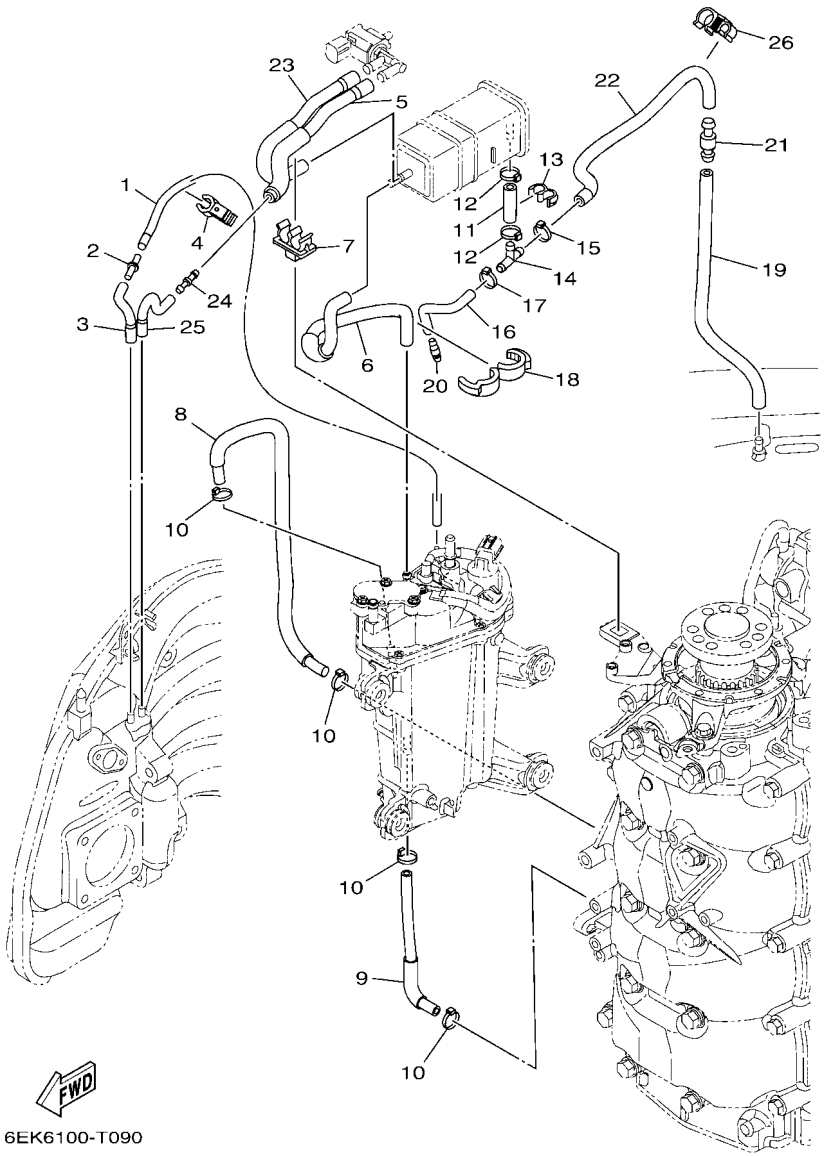

FIG. 9 INTAKE 3

REF. NO.	PART NO.	DESCRIPTION	XB	XB2				REMARKS
1	6EK–13532–00	HOSE, VACUUM SENSING 3	1	1				
2	5PS–14568–00	JOINT	1	1				
3	6EK–1475G–00	PIPE 4	1	1				
4	90464–12006	CLAMP	1	1				
5	6EK–2416A–10	HOSE	1	1				
6	6EK–1475A–00	PIPE 1	1	1				
7	90464–11012	CLAMP	1	1				
8	6EK–12576–00	HOSE 1	1	1				
9	6EK–12577–00	HOSE 2	1	1				
10	90465–11M10	CLAMP	4	4				
11	6AW–13545–10	HOSE 1	1	1				
12	90465–11M10	CLAMP	2	2				
13	90464–10M57	CLAMP	1	1				
14	688–24378–00	PIPE, JOINT 3	1	1				
15	90465–11M10	CLAMP	1	1				
16	6EK–13546–00	HOSE 2	1	1				
17	90465–11M10	CLAMP	1	1				
18	90464–16001	CLAMP	1	1				
19	6EK–13547–00	HOSE 3	1	1				
20	6E5–21744–00	BREATHER	1	1				
21	63D–21744–00	BREATHER	1	1				
22	6EK–13548–01	HOSE, AIR 4	1	1				
23	6EK–1475F–10	PIPE 3	1	1				
24	6EK–14989–00	ORIFICE, AIR VENT	1	1				
25	6EK–1475G–00	PIPE 4	1	1				
26	90464–12010	CLAMP	1	1				

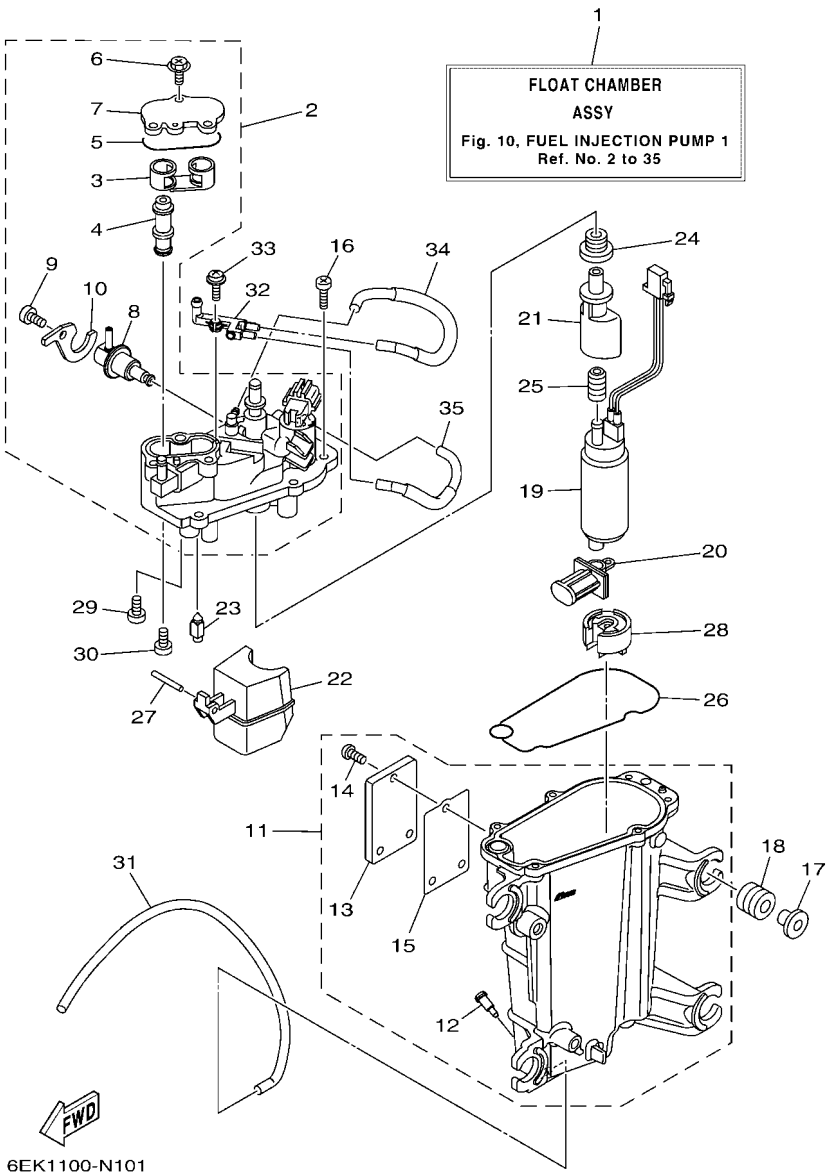

FIG. 10 FUEL INJECTION PUMP 1

REF. NO.	PART NO.	DESCRIPTION	XB	XB2				REMARKS
1	6EK–14180–03	FLOAT CHAMBER ASSY	1	1				
2	6EK–14182–00	COVER, FLOAT CHAMBER	1	1				
3	6EK–24478–00	.JOINT	1	1				
4	6EK–24481–00	.PLUG	1	1				
5	6CB–13016–00	.O-RING	1	1				
6	6CB–14216–00	.SCREW	3	3				
7	6CB–24217–00	.COVER	1	1				
8	6CB–13906–01	.REGULATOR, PRESSURE	1	1				
9	6CB–14564–00	.SCREW	1	1				
10	6DA–14146–00	.PLATE	1	1				
11	6EK–14181–00	BODY, FLOAT CHAMBER 1	1	1				
12	6P2–14191–00	.PLUG, DRAIN	1	1				
13	6EK–24452–00	.COVER	1	1				
14	6K8–14591–10	.SCREW	3	3				
15	6CB–24482–00	.GASKET 1	1	1				
16	63P–14567–00	SCREW	6	6				
17	63P–13716–00	COLLAR	4	4				
18	6CB–13593–00	DAMPER	4	4				
19	68V–13907–22	FUEL PUMP COMP.	1	1				
20	63P–13915–00	FILTER	1	1				
21	6AW–13132–00	JOINT	1	1				
22	6CB–14985–00	FLOAT	1	1				
23	6CB–14546–00	VALVE, NEEDLE	1	1				
24	6CB–1447B–00	BUSH 1	1	1				
25	6AW–13781–00	DAMPER, PUMP	1	1				
26	6CB–14984–00	GASKET, FLOAT CHAMBER	1	1				
27	6P2–14386–00	PIN, FLOAT	1	1				

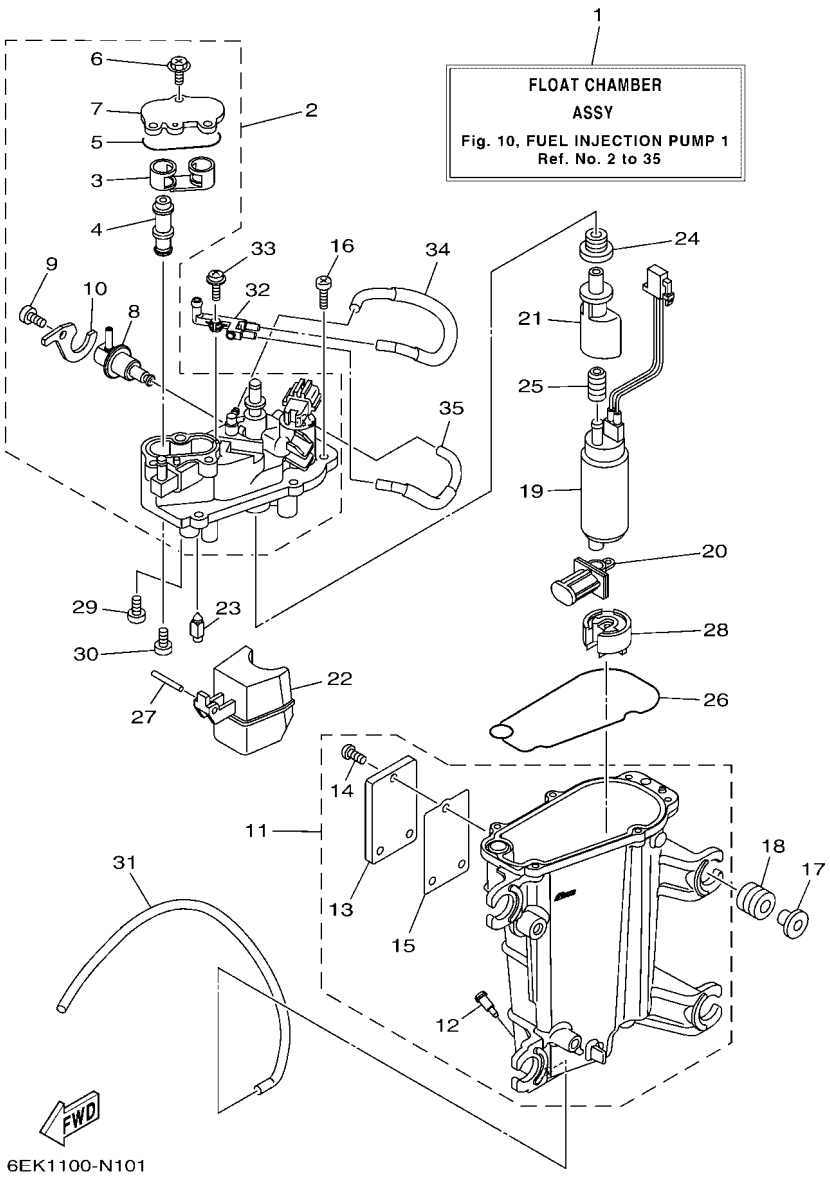

FIG. 10 FUEL INJECTION PUMP 1

REF. NO.	PART NO.	DESCRIPTION	XB	XB2				REMARKS
28	6AW–13784–00	COVER, PUMP	1	1				
29	4SV–24453–00	SCREW	1	1				
30	98507–04008	SCREW, PAN HEAD	1	1				
31	6AW–14197–00	PIPE	1	1				
32	68V–24379–10	PIPE, JOINT 4	1	1				
33	68V–14216–00	SCREW	1	1				
34	6EK–1475H–00	PIPE 5	1	1				
35	6EK–1475J–00	PIPE 6	1	1				

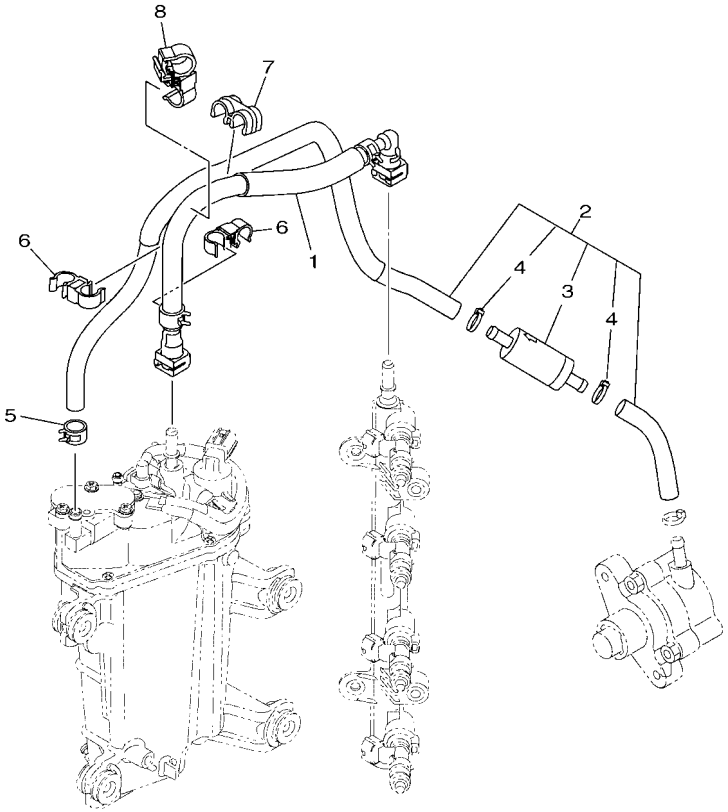

6EK1100-N110

FIG. 11 FUEL INJECTION PUMP 2

REF. NO.	PART NO.	DESCRIPTION	XB	XB2				REMARKS
1	6EK–2450B–01	FUEL HOSE ASSY	1	1				
2	6EK–24330–01	FUEL PIPE ASSY	1	1				
3	6C5–24251–01	.STRAINER 1	1	1				
4	90465–11M10	.CLAMP	2	2				
5	90467–120A7	CLIP	1	1				
6	90464–12009	CLAMP	2	2				
7	90464–12224	CLAMP	1	1				
8	90464–12012	CLAMP	1	1				

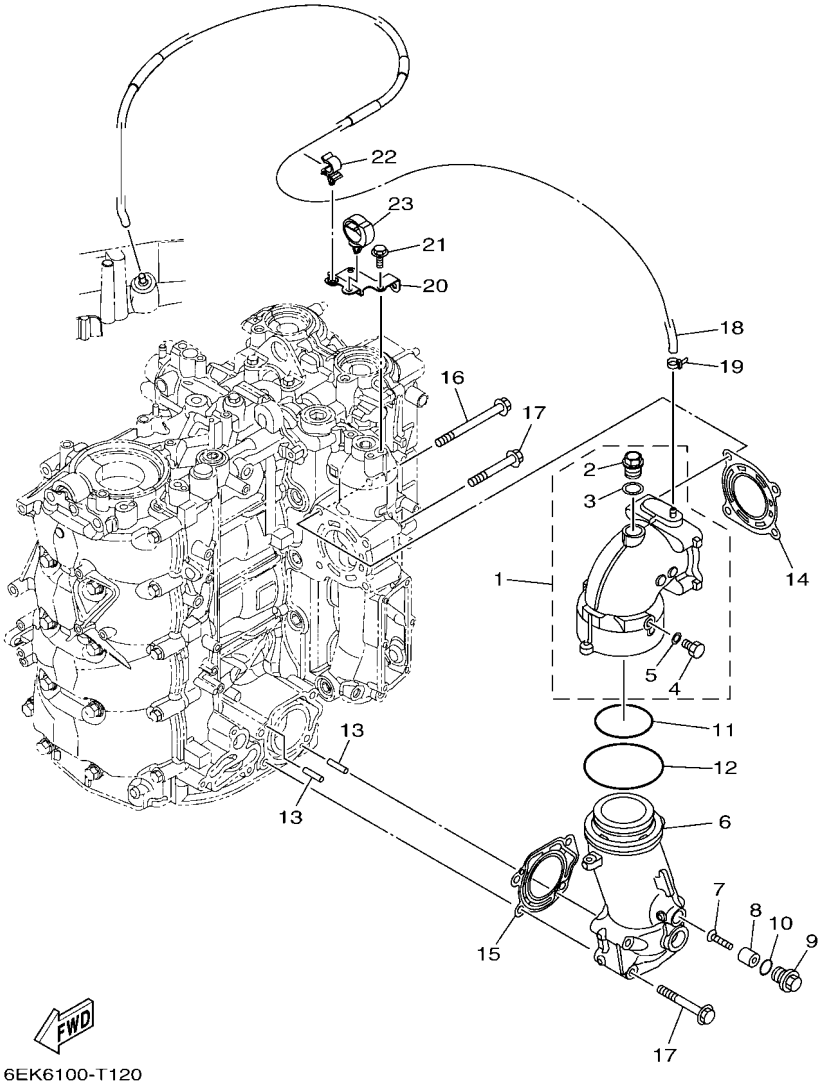

FIG. 12 EXHAUST

REF. NO.	PART NO.	DESCRIPTION	XB	XB2				REMARKS
1	6EK–14615–10	JOINT, EXHAUST 1	1	1				
2	90340–18M09	.PLUG, STRAIGHT SCREW	1	1				
3	90201–186F1	.WASHER, PLATE	1	1				
4	97D95–08014	.BOLT, HEXAGON DEEP RECESS	1	1				
5	90430–08143	.GASKET	1	1				
6	6EK–14625–00	JOINT, EXHAUST 2	1	1				
7	98780–05025	SCREW, FLAT HEAD	1	1				
8	6EK–11325–00	ANODE	1	1				
9	6G8–11197–A0	PLUG, BLIND	1	1				
10	93210–13M63	O-RING	1	1				
11	93210–64001	O-RING	1	1				
12	93210–84001	O-RING	1	1				
13	91690–50014	PIN, SPRING	2	2				
14	6EK–41114–00	GASKET, EXHAUST OUTER COVER	1	1				
15	6EK–41124–00	GASKET, EXHAUST OUTER COVER	1	1				
16	90105–08247	BOLT, FLANGE	2	2				
17	90105–08220	BOLT, FLANGE	6	6				
18	6EM–42542–00	PIPE	1	1				
19	90465–11M10	CLAMP	1	1				
20	6EK–82398–00	PLATE 3	1	1				
21	95D95–06012	BOLT, FLANGE DEEP RECESS	2	2				
22	90464–09129	CLAMP	1	1				
23	90464–12183	CLAMP	1	1				

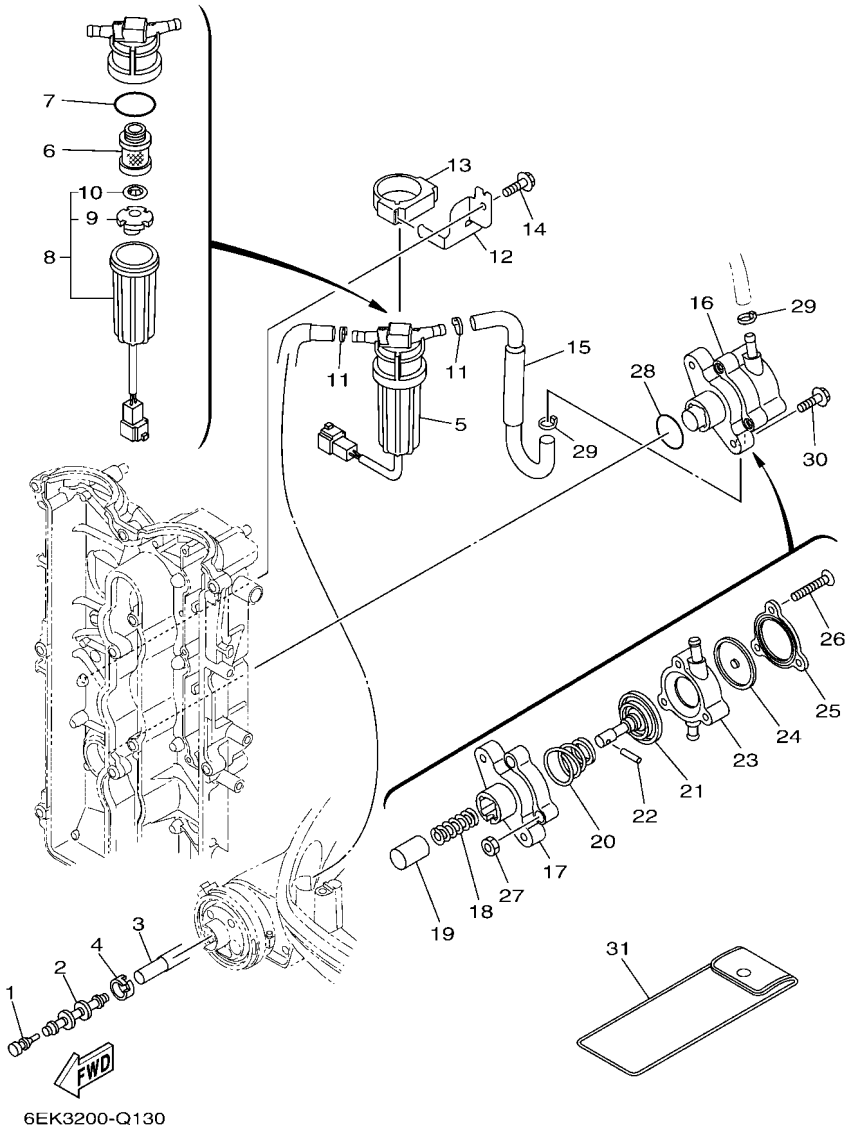

FIG. 13 FUEL 1

REF. NO.	PART NO.	DESCRIPTION	XB	XB2				REMARKS
1	689–85547–01	DAMPER	1	1				
2	6AW–24377–01	PIPE, JOINT 2	1	1				
3	6EK–24314–00	PIPE 4	1	1				
4	6E5–24351–51	BAND 1	1	1				
5	6EK–24560–00	FILTER ASSY	1	1				
6	6D8–24563–00	.ELEMENT, FILTER	1	1				
7	6D8–24564–00	.GASKET	1	1				
8	6D8–24562–00	.CUP, FILTER	1	1				
9	6D8–24469–00	..FLOAT, WATER LEVEL	1	1				
10	6D8–24519–00	..CLIP	1	1				
11	90465–11M10	CLAMP	2	2				
12	6EK–24566–00	BRACKET, FILTER	1	1				
13	6EK–24568–00	BAND, FILTER	1	1				
14	95D95–06016	BOLT, FLANGE DEEP RECESS	1	1				
15	6EK–24311–00	PIPE, FUEL 1	1	1				
16	6EK–24410–00	FUEL PUMP ASSY	1	1				
17	68V–24412–00	.BODY 1	1	1				
18	68V–24454–00	.SPRING	1	1				
19	63P–13131–00	.PLUNGER	1	1				
20	63P–24423–00	.SPRING, DIAPHRAGM	1	1				
21	68V–24411–00	.DIAPHRAGM	1	1				
22	68V–24374–00	.PIN	1	1				
23	6EK–24413–00	.BODY 2	1	1				
24	68V–24471–10	.DIAPHRAGM	1	1				
25	6EK–24414–00	.BODY 3	1	1				
26	68V–24444–00	.SCREW	3	3				
27	68V–24149–00	.NUT	3	3				

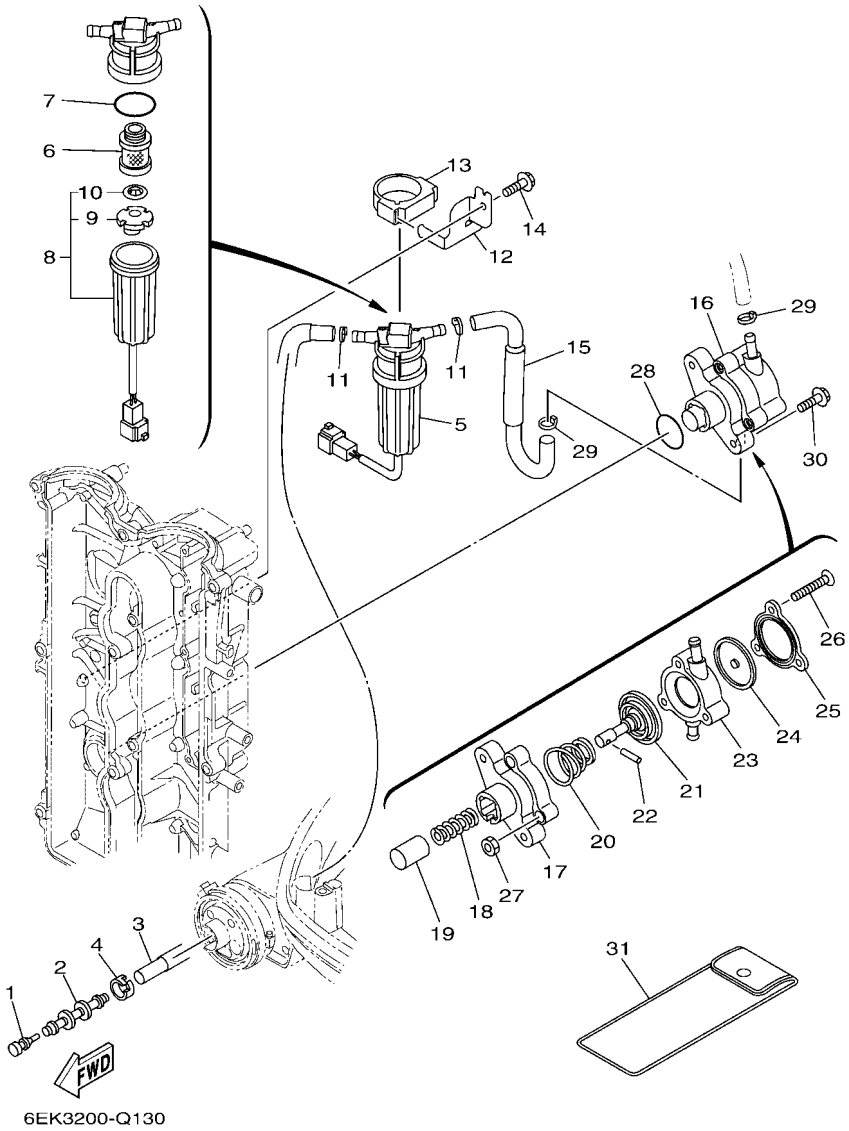

FIG. 13 FUEL 1

REF. NO.	PART NO.	DESCRIPTION	XB	XB2				REMARKS
28	93210–30682	O-RING	1	1				
29	90465–11M10	CLAMP	2	2				
30	90105–06208	BOLT, FLANGE	2	2				
31	67F–28100–03	TOOL KIT	1	1				AP

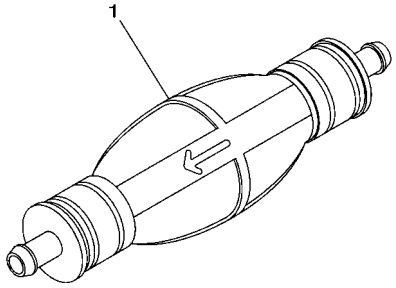

68VC100-L120

FIG. 14 FUEL 2

REF. NO.	PART NO.	DESCRIPTION	XB	XB2				REMARKS
1	6YK–24360–73	PRIMER PUMP ASSY	1	1				AP

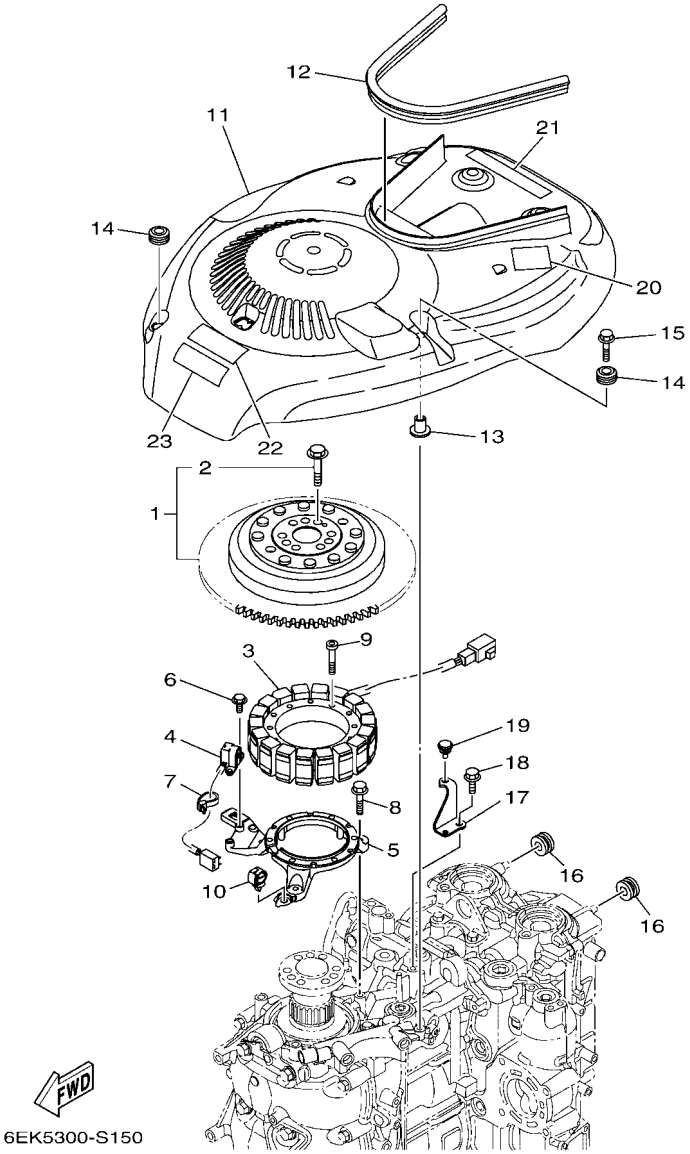

FIG. 15 GENERATOR

REF. NO.	PART NO.	DESCRIPTION	XB	XB2				REMARKS
1	6EK–W8145–01	ROTOR ASSY WITH BOLTS	1	1				
2	6EK–W9010–00	.BOLT SET	1	1				
3	6EK–81410–00	STATOR ASSY	1	1				
4	6CB–85580–00	COIL, PULSER	1	1				
5	6EK–85561–00	BASE, MAGNETO	1	1				
6	97595–05516	BOLT, WITH WASHER	2	2				
7	90465–13M97	CLAMP	1	1				
8	95D95–06030	BOLT, FLANGE DEEP RECESS	3	3				
9	91312–06035	BOLT, HEXAGON SOCKET HEAD	6	6				
10	90464–13249	CLAMP	1	1				
11	6EK–81337–01	COVER, FLYWHEEL	1	1				
12	6EK–42617–00	DAMPER, FORM	1	1				
13	90387–06119	COLLAR	1	1				
14	6A0–82317–01	DAMPER, IGNITION COIL	2	2				
15	95D95–06030	BOLT, FLANGE DEEP RECESS	1	1				
16	90480–12314	GROMMET	2	2				
17	6EK–8132G–00	PLATE	1	1				
18	95D95–06016	BOLT, FLANGE DEEP RECESS	1	1				
19	90480–06M19	GROMMET	1	1				
20	6EK–83626–02	MARK 6	1	1				
21	6EK–13437–62	MARK, CAUTION	1	1				
22	6EE–81994–40	LABEL, SAFETY	1	1				
23	6EE–81994–50	LABEL, SAFETY	1	1				

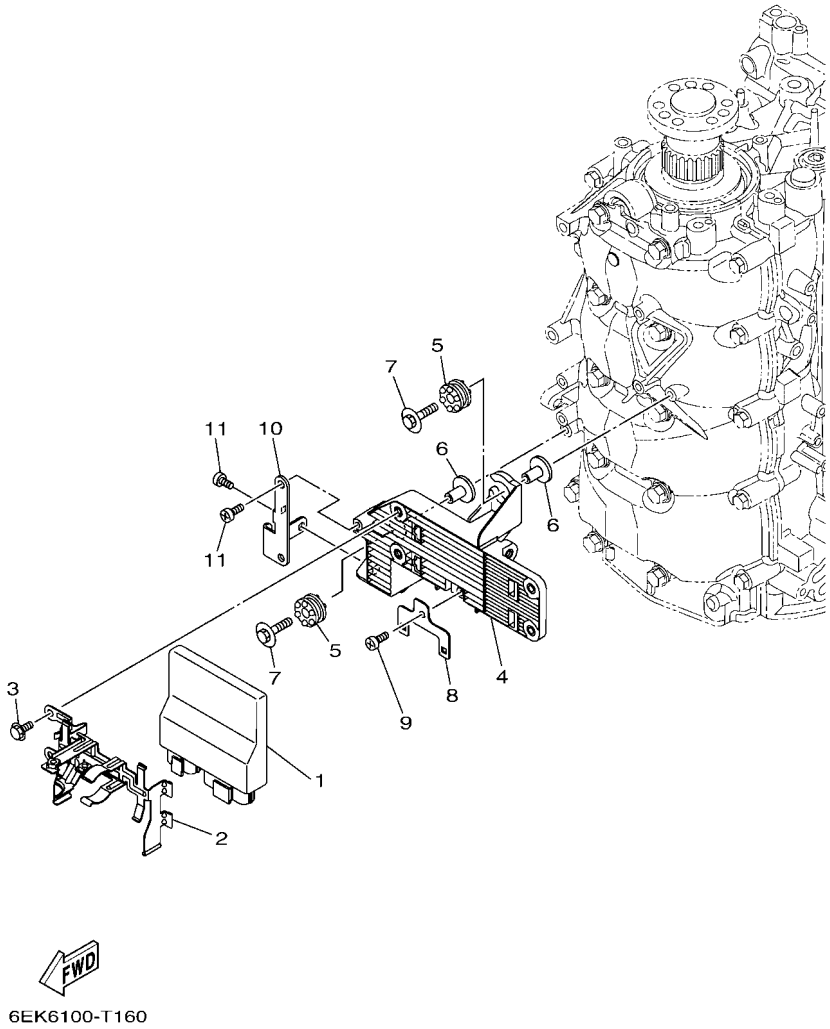

FIG. 16 ELECTRICAL 1

REF. NO.	PART NO.	DESCRIPTION	XB	XB2				REMARKS
1	6EK–8591A–21	ENGINE CONTROL UNIT ASSY	1	1				
2	6EK–8253C–00	SPRING, PLATE LOCK	1	1				
3	95D95–06010	BOLT, FLANGE DEEP RECESS	2	2				
4	6EK–81948–01	BRACKET	1	1				
5	60V–85564–00	GROMMET	2	2				
6	90387–06176	COLLAR	2	2				
7	68F–85119–00	BOLT	2	2				
8	6C5–8257V–00	PLATE, CONNECTOR	1	1				
9	97780–60620	SCREW, TAPPING	1	1				
10	6EK–85548–00	HOLDER	1	1				
11	97780–60620	SCREW, TAPPING	2	2				

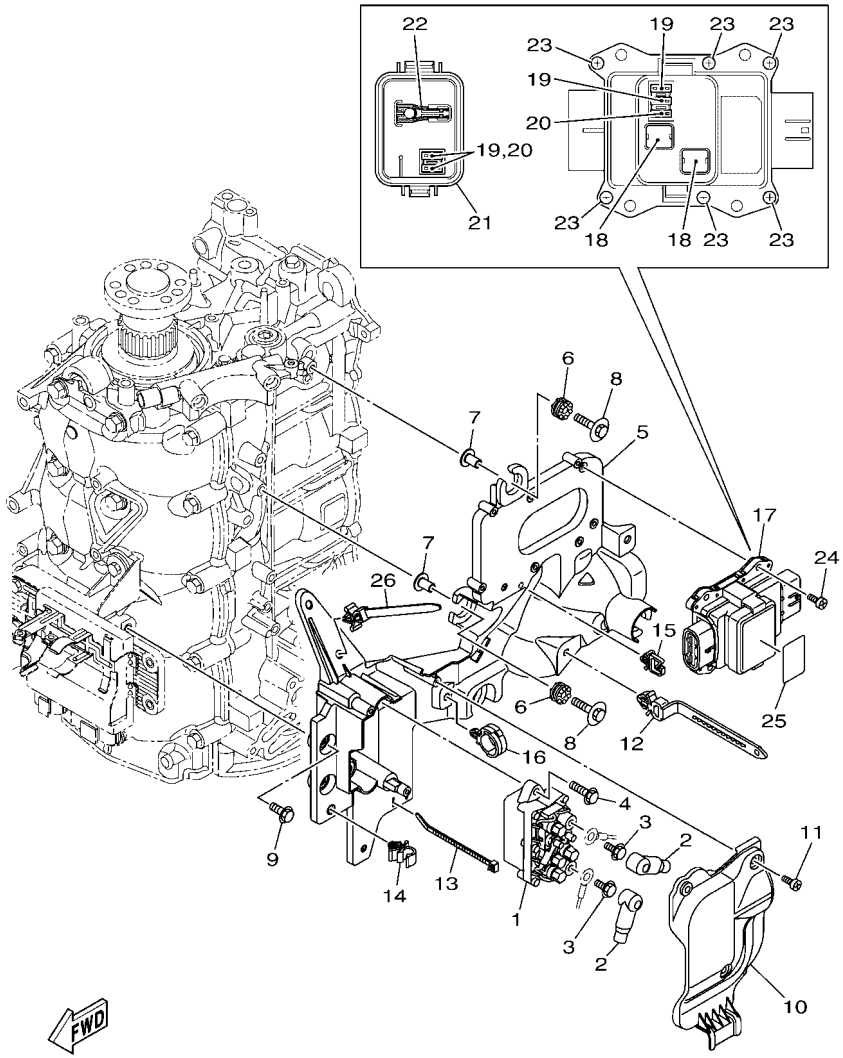

6EK6100-T170

FIG. 17 ELECTRICAL 2

REF. NO.	PART NO.	DESCRIPTION	XB	XB2				REMARKS
1	63P–81950–00	RELAY ASSY	1	1				
2	682–82119–01	COVER, LEAD WIRE	2	2				
3	97E95–06610	BOLT, HEXAGON W/W DEEP RECESS	2	2				
4	97E95–06520	BOLT, HEXAGON W/W DEEP RECESS	2	2				
5	6EK–81952–10	HOLDER, RELAY	1	1				
6	60V–85564–00	GROMMET	4	4				
7	90387–06176	COLLAR	4	4				
8	68F–85119–00	BOLT	4	4				
9	95D95–06016	BOLT, FLANGE DEEP RECESS	2	2				
10	6EK–81942–10	COVER	1	1				
11	90169–05M00	SCREW, TRUSS HEAD TAPPING	3	3				
12	90465–13M76	CLAMP	1	1				
13	90465–11M52	CLAMP	1	1				
14	90464–10M32	CLAMP	1	1				
15	90464–08004	CLAMP	1	1				
16	90464–12183	CLAMP	1	1				
17	6FP–82170–01	FUSE BOX ASSY	1	1				
18	6FP–82151–01	.FUSE (50A)	2	2				
19	6CB–82151–20	.FUSE (20A)	3	3				
20	6CB–82151–30	.FUSE (30A)	2	2				
21	6FP–85544–00	.COVER	1	1				
22	6CB–2812A–00	.PULLER, FUSE	1	1				
23	6P2–82113–00	.SCREW (M3)	6	6				
24	97780–50620	SCREW, TAPPING	4	4				
25	6EK–81919–11	GRAPHIC, REGULATOR	1	1				
26	90465–12M56	CLAMP	1	1				

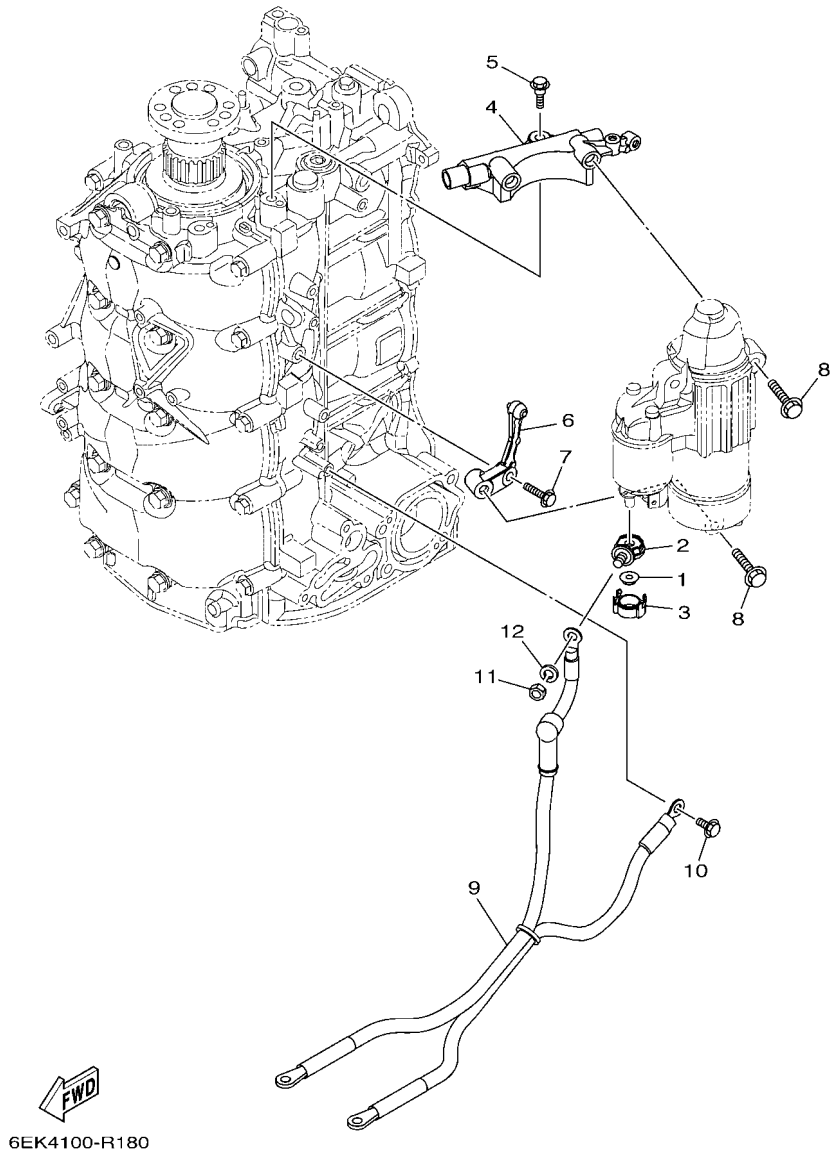

FIG. 18 ELECTRICAL 3

REF. NO.	PART NO.	DESCRIPTION	XB	XB2				REMARKS
1	90179–08003	NUT	1	1				
2	60V–81925–00	TERMINAL	1	1				
3	68F–82582–00	CAP,1	1	1				
4	6EK–81822–01	BRACKET, STARTING MOTOR	1	1				
5	90109–08240	BOLT	2	2				
6	6EK–81823–00	STAY, STARTING MOTOR	1	1				
7	95812–08030	BOLT, FLANGE	1	1				
8	90105–08248	BOLT, FLANGE	3	3				
9	68V–82105–02	BATTERY CABLE	1	1				AP
10	90105–06M14	BOLT FLANGE	1	1				AP
11	95333–08600	NUT	1	1				AP
12	92903–08100	WASHER, SPRING	1	1				AP

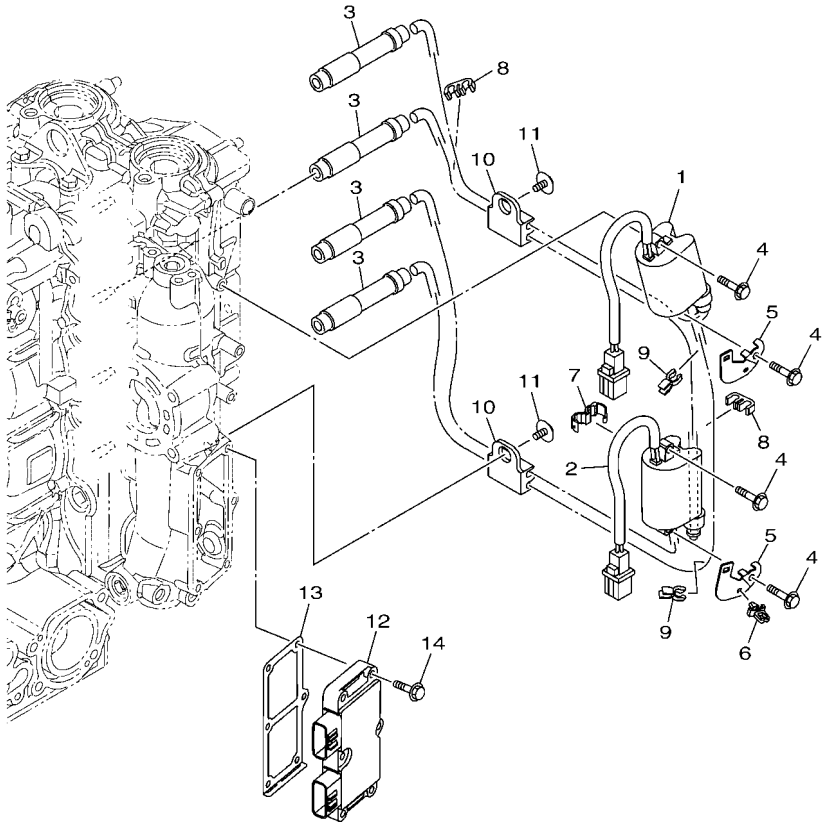

6EK6100-T190

FIG. 19 ELECTRICAL 4

REF. NO.	PART NO.	DESCRIPTION	XB	XB2				REMARKS
1	6EK–82310–00	IGNITION COIL ASSY	1	1				
2	6EK–82310–10	IGNITION COIL ASSY	1	1				
3	6EK–82370–00	PLUG CAP ASSY	4	4				
4	97E95–06525	BOLT, HEXAGON W/W DEEP RECESS	4	4				
5	6EK–82388–00	PLATE	2	2				
6	90464–06001	CLAMP	1	1				
7	90464–13227	CLAMP	1	1				
8	67F–82361–00	CLAMP, CORD	2	2				
9	90464–07M41	CLAMP	2	2				
10	67F–82362–00	CLAMP, CORD 2	2	2				
11	90119–06275	BOLT, WITH WASHER	2	2				
12	6EK–81960–10	RECTIFIER & REGULATOR ASSY	1	1				
13	6EK–81975–01	PLATE, RECTIFIER FITTING	1	1				
14	97E95–06530	BOLT, HEXAGON W/W DEEP RECESS	6	6				

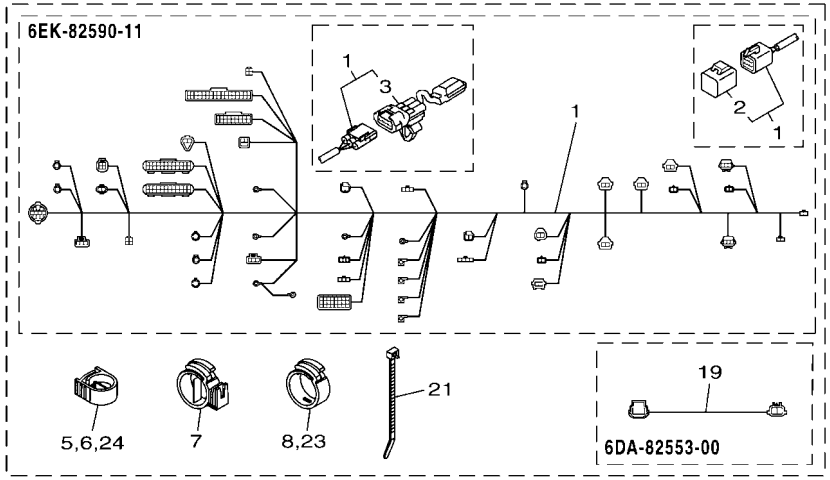

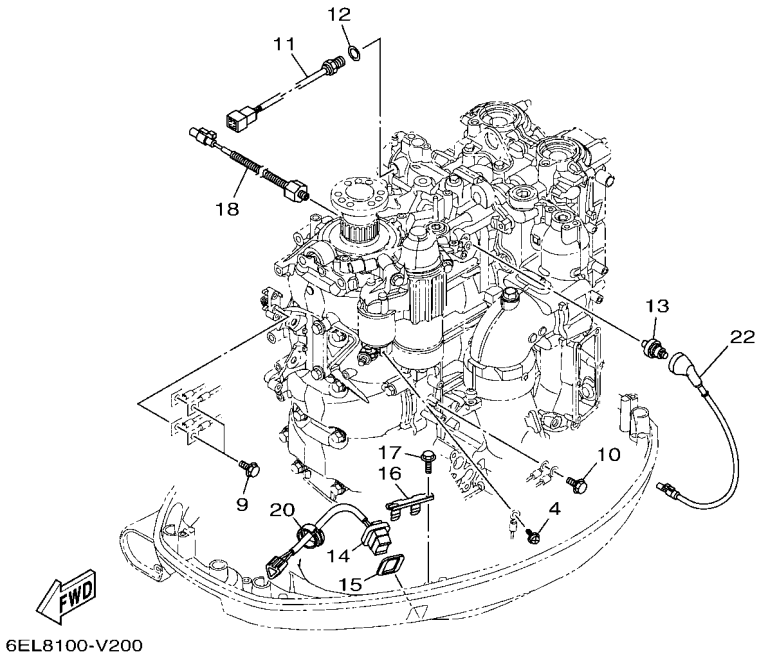

FIG. 20 ELECTRICAL 5

REF. NO.	PART NO.	DESCRIPTION	XB	XB2				REMARKS
1	6EK–82590–11	WIRE HARNESS ASSY	1	1				
2	6Y8–82582–11	.CAP 1 (4PIN)	1	1				
3	6EK–81980–01	.DIODE ASSY	1	1				
4	97985–04308	SCREW, WITH WASHER	1	1				
5	90464–18004	CLAMP	1	1				
6	90464–18004	CLAMP	1	1				
7	90464–22005	CLAMP	1	1				
8	90464–16001	CLAMP	1	1				
9	97E95–06516	BOLT, HEXAGON W/W DEEP RECESS	2	2				
10	97E95–06516	BOLT, HEXAGON W/W DEEP RECESS	1	1				
11	6CJ–85790–00	THERMOSENSOR ASSY	1	1				
12	90430–14115	GASKET	1	1				
13	68V–82504–00	OIL PRESSURE SWITCH ASSY	1	1				
14	69J–82563–01	TRIM & TILT SWITCH ASSY	1	1				
15	69J–82587–01	GASKET	1	1				
16	69J–83614–00	BRACKET	1	1				
17	90109–06M86	BOLT	2	2				
18	6CJ–85780–01	SENSOR, KNOCK	1	1				
19	6DA–82553–00	EXTENSION, WIRE LEAD	1	1				
20	90464–16001	CLAMP	1	1				
21	90465–13M18	CLAMP	1	1				
22	6EK–82553–11	EXTENSION, WIRE LEAD	1	1				
23	90464–16001	CLAMP	1	1				
24	90464–18004	CLAMP	1	1				

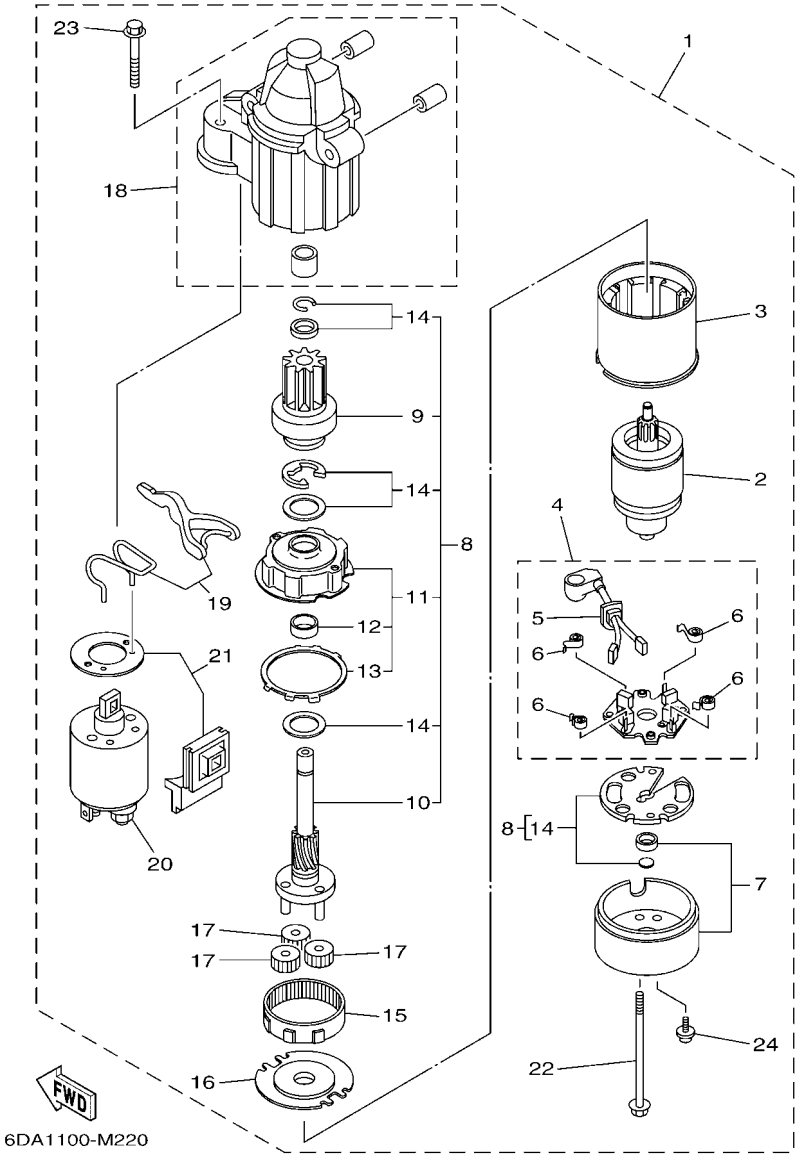

FIG. 21 STARTING MOTOR

REF. NO.	PART NO.	DESCRIPTION	XB	XB2				REMARKS
1	6EM–81800–01	STARTING MOTOR ASSY	1	1				
2	67F–81850–00	.ARMATURE ASSY	1	1				
3	67F–81810–00	.STATOR ASSY	1	1				
4	69J–81840–11	.BRUSH HOLDER ASSY	1	1				
5	69J–81801–11	..BRUSH SET	1	1				
6	67F–81813–00	..SPRING, BRUSH	4	4				
7	6CB–81820–00	.REAR BRACKET ASSY	1	1				
8	6CB–81807–00	.GEAR ASSY, STARTING MOTOR	1	1				
9	6CB–81832–00	..CLUTCH, OVER RUN	1	1				
10	6CB–81836–00	..SHAFT, PINION	1	1				
11	67F–81821–00	..BRACKET, CENTER 1	1	1				
12	67F–81841–00	...BEARING	1	1				
13	67F–8183R–00	...GASKET	1	1				
14	6CB–81809–00	..WASHER KIT	1	1				
15	67F–81891–00	.GEAR, RING	1	1				WITH 67F-8183R-00
16	67F–81830–00	.BRACKET, CENTER 2	1	1				
17	60V–8183T–00	.GEAR, IDLER	3	3				
18	6CB–81842–00	.COVER	1	1				
19	6C5–81839–00	.LEVER ASSY	1	1				
20	6EM–81941–00	.STARTER RELAY ASSY	1	1				
21	6C5–81869–00	.COVER, DUST	1	1				
22	6CB–81826–00	.BOLT	2	2				
23	69J–81828–00	.BOLT 2	2	2				
24	67F–81846–00	.SCREW	2	2				

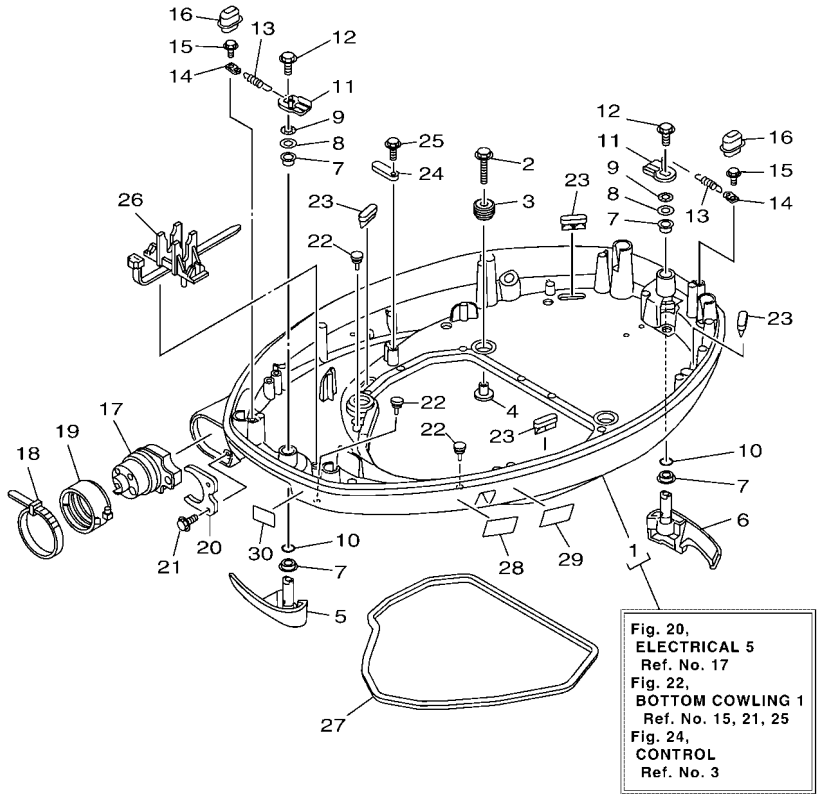

6EK7100-U220

FIG. 22 BOTTOM COWLING 1

REF. NO.	PART NO.	DESCRIPTION	XB	XB2				REMARKS
1	6EK–42710–01	BOTTOM COWLING ASSY	1					
	6EK–42710–01–CE	BOTTOM COWLING ASSY		1				WHITE
2	90119–08187	BOLT, WITH WASHER	4	4				
3	90480–22M15	GROMMET	4	4				
4	90387–08M37	COLLAR	4	4				
5	6EK–42815–01–8D	LEVER, CLAMP 1	1					GRAY
	6EK–42815–01–CE	LEVER, CLAMP 1		1				WHITE
6	6EK–42816–01–8D	LEVER, CLAMP 2	1					GRAY
	6EK–42816–01–CE	LEVER, CLAMP 2		1				WHITE
7	90386–15M73	BUSH	4	4				
8	90201–156J2	WASHER, PLATE	2	2				
9	90206–15M18	WASHER, WAVE	2	2				
10	93210–13M63	O-RING	2	2				
11	6CB–42818–00	LEVER, CLAMP 4	2	2				
12	95D95–08012	BOLT, FLANGE DEEP RECESS	2	2				
13	90506–22001	SPRING, TENSION	2	2				
14	66T–43144–00	HOOK, SPRING	2	2				
15	90109–06M86	BOLT	2	2				
16	6EK–42728–01	CAP	2	2				
17	6EK–42725–10	GROMMET	1	1				
18	90464–20258	CLAMP	1	1				AP
19	68F–42753–00	FASTNER	1	1				AP
20	6CB–42761–00	STOPPER	1	1				
21	90109–06316	BOLT	2	2				
22	6H4–42748–01	GROMMET	3	3				
23	67F–42717–00	RUBBER, SEAL 2	4	4				
24	6E5–82588–00	PLATE	1	1				

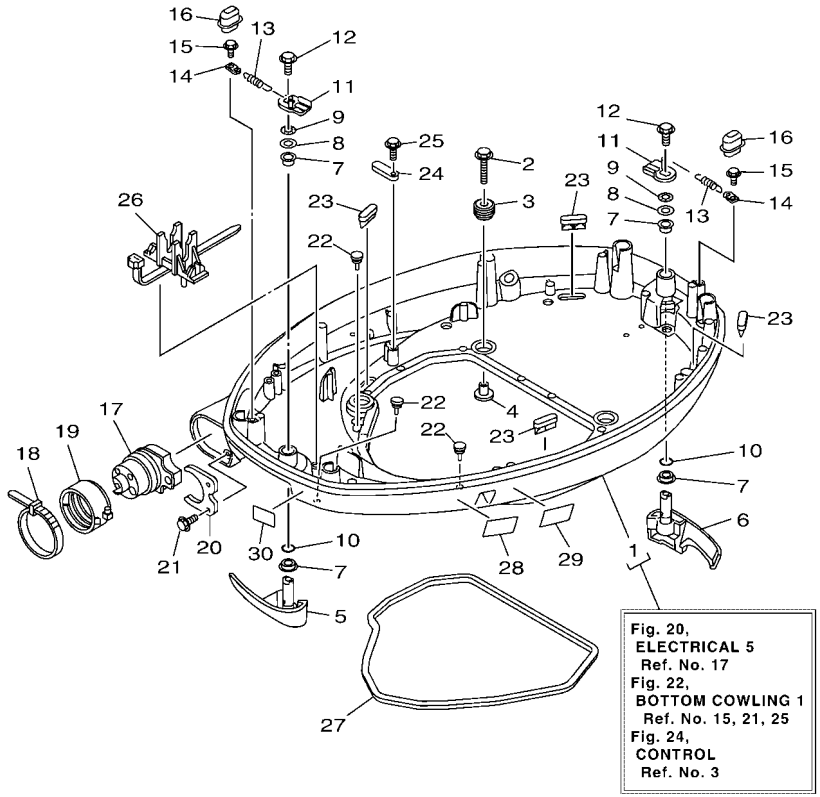

6EK7100-U220

FIG. 22 BOTTOM COWLING 1

REF. NO.	PART NO.	DESCRIPTION	XB	XB2				REMARKS
25	90109–06M81	BOLT	1	1				
26	68V–82594–00	CLAMP	1	1				
27	6EK–42716–01	RUBBER SEAL 1	1	1				
28	6EE–42794–40	LABEL, WARNING (GENERAL)	1	1				
29	6EE–42794–50	LABEL, WARNING (GENERAL)	1	1				
30	6AH–81996–00	MARK	1	1				

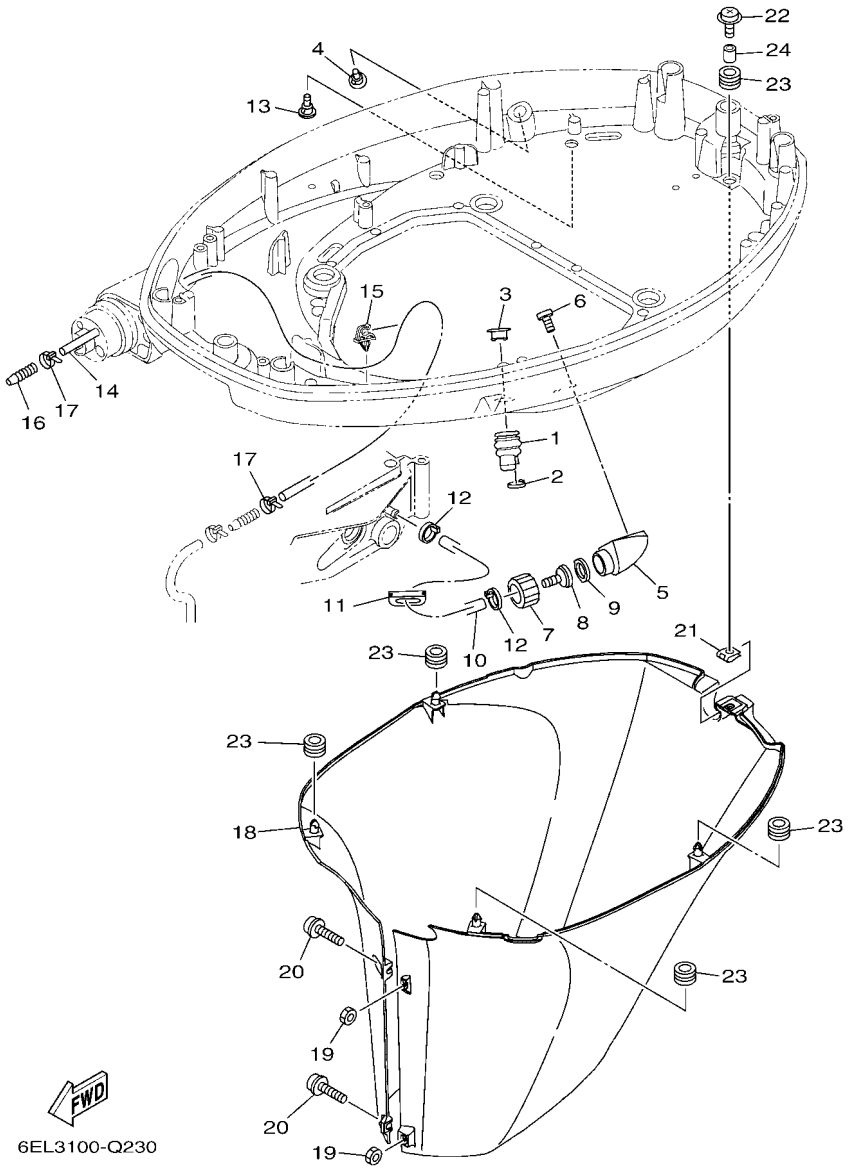

FIG. 23 BOTTOM COWLING 2

REF. NO.	PART NO.	DESCRIPTION	XB	XB2				REMARKS
1	6H1–42726–31	GROMMET	1	1				
2	90465–11M10	CLAMP	1	1				
3	6BG–42384–00	SEAL, CAP	1	1				
4	6P2–44391–00	NIPPLE, HOSE	1	1				
5	6AW–12572–00	ADAPTER	1	1				
6	97780–60520	SCREW, TAPPING	2	2				
7	6R3–12581–00	JOINT, HOSE 1	1	1				
8	6R3–12582–00	JOINT, HOSE 2	1	1				
9	6R3–12583–00	GASKET, HOSE JOINT	1	1				
10	6EK–42541–00	PIPE 1	1	1				
11	6AH–42726–01	GROMMET	1	1				
12	90465–11M10	CLAMP	2	2				
13	6P2–44391–00	NIPPLE, HOSE	1	1				
14	90445–073F9	HOSE (L1200)	1	1				
15	90464–07259	CLAMP	1	1				
16	6E5–83558–00	END, NIPPLE	1	1				
17	90465–11M10	CLAMP	2	2				
18	6EK–42741–00–8D	APRON	1					GRAY
	6EK–42741–00–CE	APRON		1				WHITE
19	95380–06600	NUT, HEXAGON	2	2				
20	90159–06M28	SCREW, WITH WASHER	2	2				
21	90183–061A8	NUT, SPRING	1	1				
22	90159–06053	SCREW, WITH WASHER	1	1				
23	90480–13M24	GROMMET	5	5				
24	90387–06M43	COLLAR	1	1				

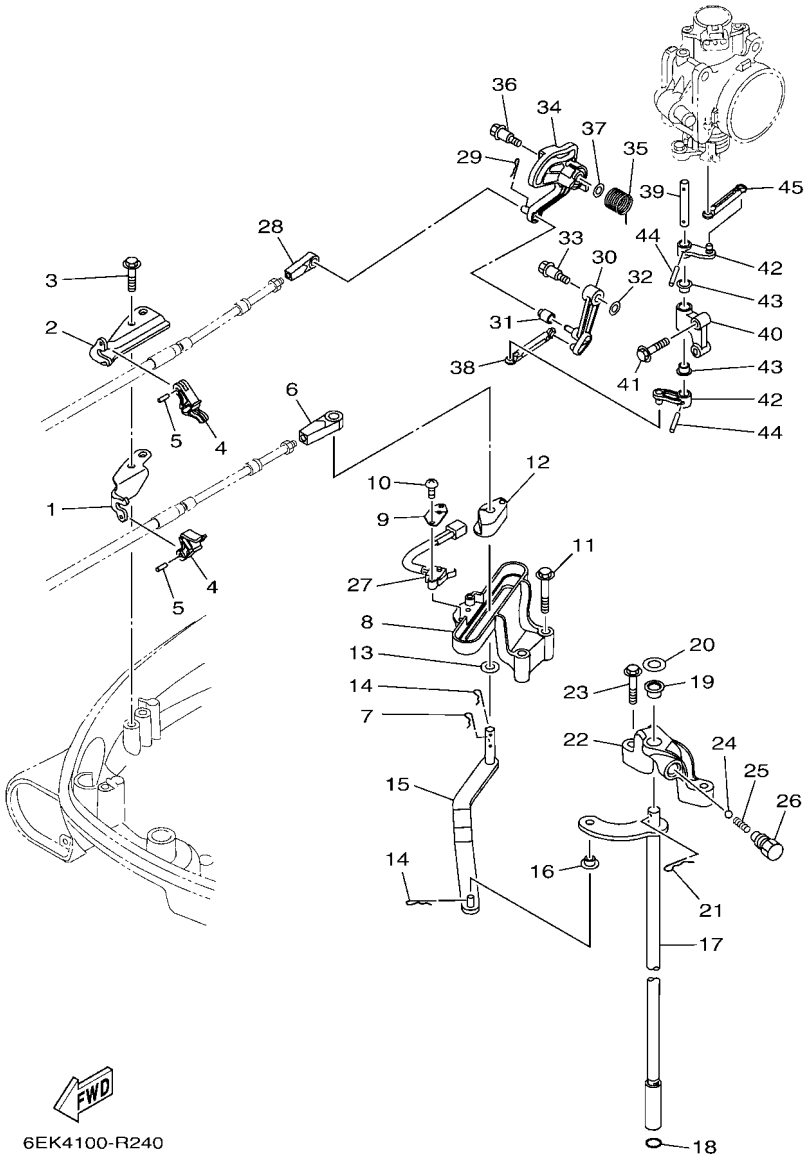

FIG. 24 CONTROL

REF. NO.	PART NO.	DESCRIPTION	XB	XB2				REMARKS
1	6EK–48531–01	BRACKET, REMOTE CONTROL 1	1	1				
2	6EK–48532–00	BRACKET, REMOTE CONTROL 2	1	1				
3	90109–06M81	BOLT	2	2				
4	6EK–48538–00	CLAMP, CABLE 1	2	2				
5	91690–30010	PIN, SPRING	2	2				
6	6E5–48344–00	CABLE END, REMOTE CONTROL	1	1				
7	90468–18008	CLIP	1	1				
8	6EK–44117–01	BRACKET	1	1				
9	61A–82588–01	PLATE	1	1				
10	97985–04116	SCREW, WITH WASHER	2	2				
11	95D75–06040	BOLT, FLANGE DEEP RECESS	2	2				
12	63P–44122–00	BUSHING, SHIFT ROD LEVER	1	1				
13	90202–08M20	WASHER, PLATE	1	1				
14	90468–18008	CLIP	2	2				
15	6EK–44121–00	LEVER, SHIFT ROD	1	1				
16	90386–06M12	BUSH	1	1				
17	6EK–44120–11	HANDLE GEAR SHIFT ASSY	1	1				X(25.3")
18	93210–09165	O-RING	1	1				
19	90386–10001	BUSH	1	1				
20	90201–11008	WASHER, PLATE	1	1				
21	90468–180A0	CLIP	1	1				
22	6EK–44118–00	BRACKET	1	1				
23	95D95–06030	BOLT, FLANGE DEEP RECESS	2	2				
24	93501–04M02	BALL	1	1				
25	90501–12082	SPRING, COMPRESSION	1	1				
26	648–42715–00	BUSHING 2	1	1				
27	60V–8259F–01	SWITCH ASSY	1	1				

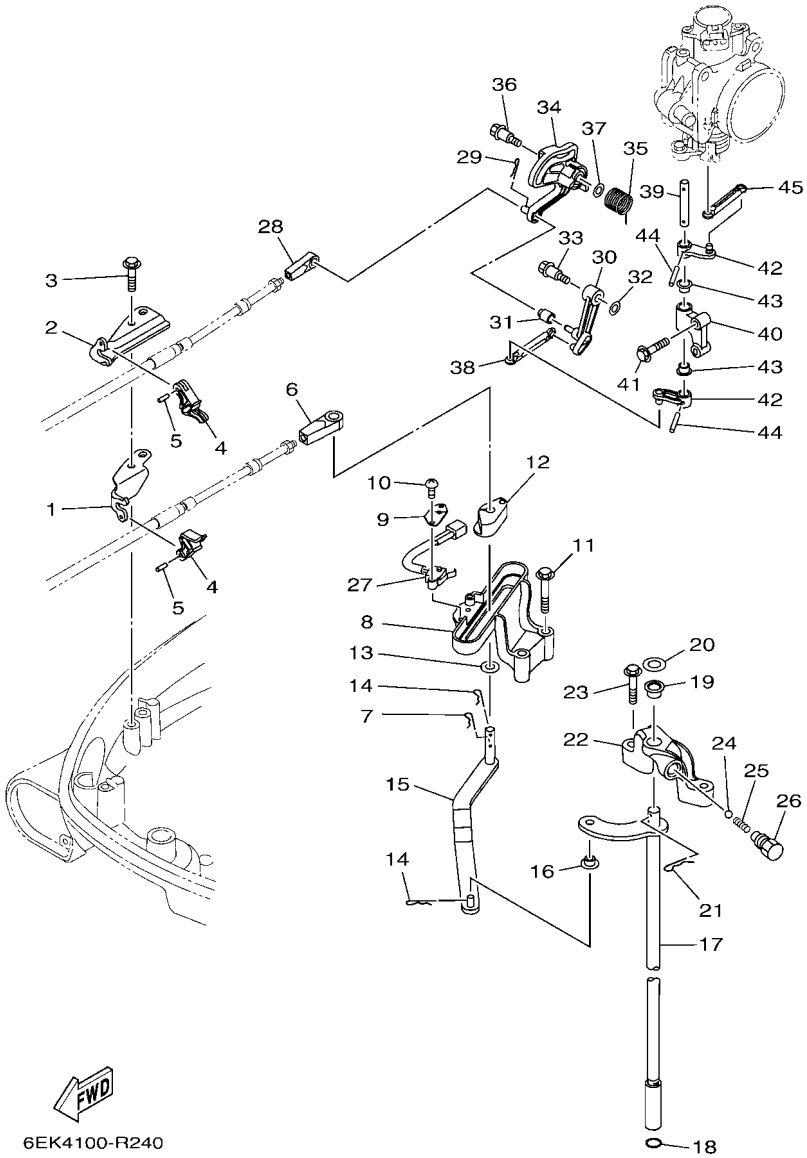

FIG. 24 CONTROL

REF. NO.	PART NO.	DESCRIPTION	XB	XB2				REMARKS
28	6E5–48344–00	CABLE END, REMOTE CONTROL	1	1				
29	90468–18008	CLIP	1	1				
30	6EK–42154–00	LEVER, THROTTLE CONTROL	1	1				
31	68V–42171–00	BUSHING	1	1				
32	90201–06M05	WASHER, PLATE	1	1				
33	90109–06288	BOLT	1	1				
34	6EK–41213–00	CAM, ACCEL.	1	1				
35	6EK–44135–00	SPRING	1	1				
36	90109–06288	BOLT	1	1				
37	90201–06M05	WASHER, PLATE	1	1				
38	6EK–41237–10	JOINT, LINK	1	1				
39	6EK–41635–00	SHAFT, LINK CONNECTING	1	1				
40	6EK–41662–00	BRACKET 2	1	1				
41	95D95–06030	BOLT, FLANGE DEEP RECESS	2	2				
42	6EK–42157–00	LEVER, THROTTLE	2	2				
43	90386–10001	BUSH	2	2				
44	91690–30018	PIN, SPRING	2	2				
45	6EK–41237–00	JOINT, LINK	1	1				

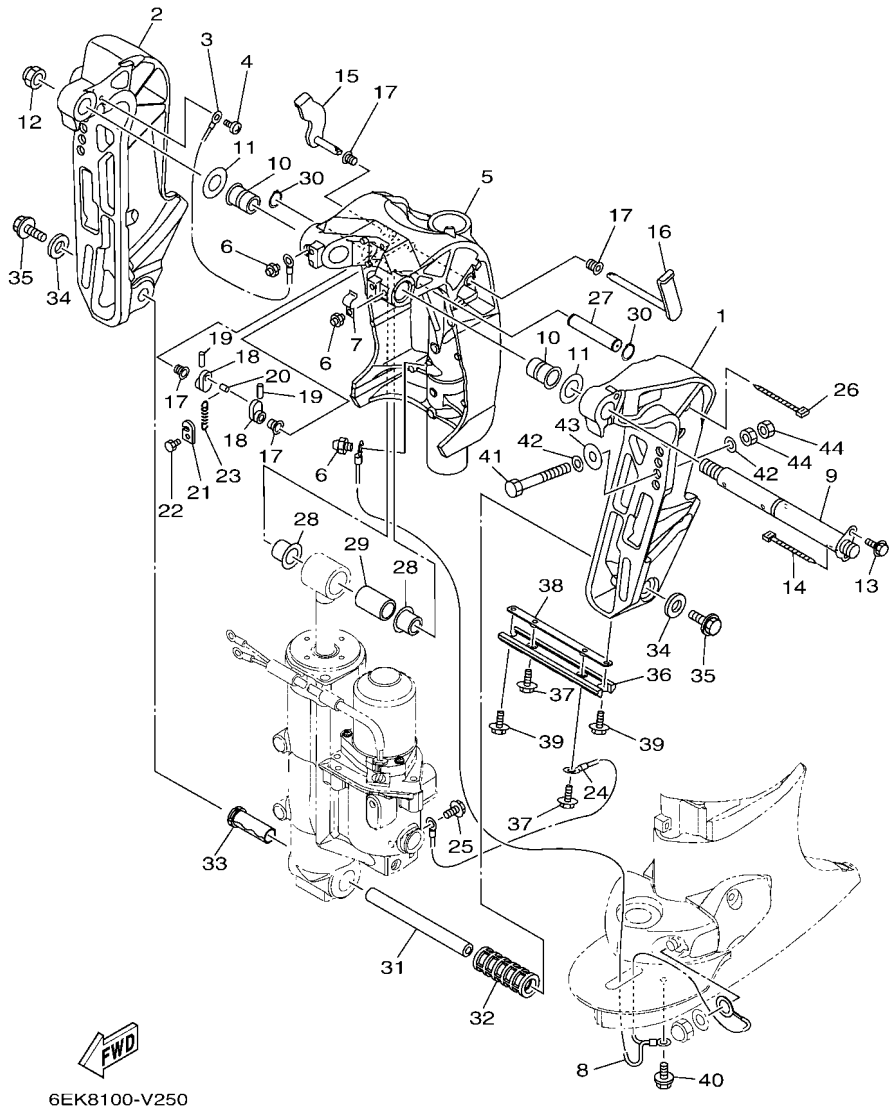

FIG. 25 BRACKET 1

REF. NO.	PART NO.	DESCRIPTION	XB	XB2				REMARKS
1	6EK–43111–00–8D	BRACKET, CLAMP 1	1					GRAY
	6EK–43111–00–CE	BRACKET, CLAMP 1		1				WHITE
2	6EK–43112–00–8D	BRACKET, CLAMP 2	1					GRAY
	6EK–43112–00–CE	BRACKET, CLAMP 2		1				WHITE
3	6E5–82148–00	WIRE, LEAD 4	1	1				
4	97880–06012	SCREW, PAN HEAD	1	1				
5	6EK–43311–10–8D	BRACKET, SWIVEL 1	1					GRAY, X(25.3")
	6EK–43311–10–CE	BRACKET, SWIVEL 1		1				WHITE, X(25.3")
6	93700–06002	NIPPLE, GREASE	3	3				
7	90465–08M63	CLAMP	1	1				
8	68V–82149–30	WIRE, LEAD 3	1	1				X(25.3")
9	64E–43131–30	BOLT, CLAMP BRACKET	1	1				
10	90386–25M31	BUSH	2	2				
11	90201–26M59	WASHER, PLATE	2	2				
12	90185–22M11	NUT, SELF-LOCKING	1	1				
13	97E95–08520	BOLT, HEXAGON W/W DEEP RECESS	1	1				
14	90465–11M10	CLAMP	1	1				
15	6EK–43181–00	LEVER, TILT STOP 1	1	1				
16	6EK–43185–00	LEVER, TILT STOP 2	1	1				
17	90386–10M16	BUSH	4	4				
18	6G5–43148–00	COLLAR, DISTANCE	2	2				
19	91690–30020	PIN, SPRING	2	2				
20	90249–06M19	PIN	1	1				
21	66T–43144–00	HOOK, SPRING	1	1				
22	97D95–06010	BOLT, HEXAGON DEEP RECESS	1	1				
23	90506–14M24	SPRING, TENSION	1	1				
24	6D8–82148–00	WIRE, LEAD 4	1	1				

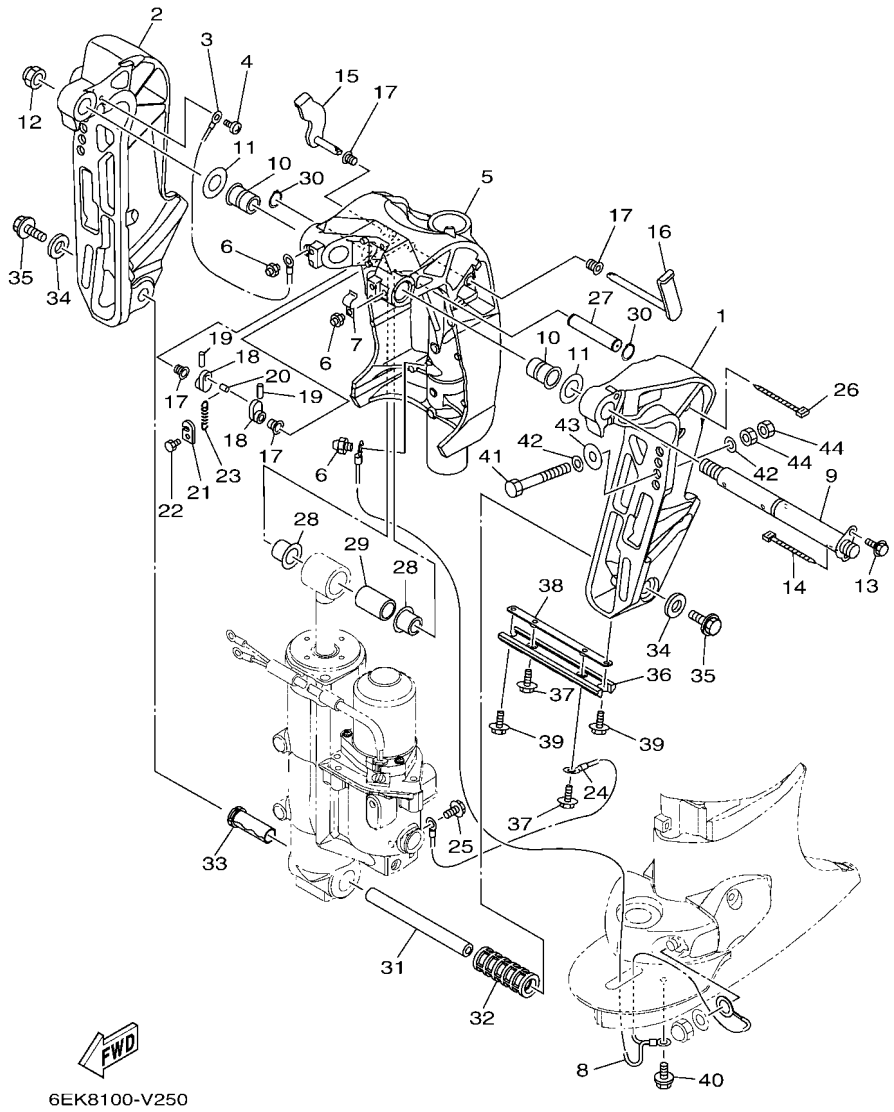

FIG. 25 BRACKET 1

REF. NO.	PART NO.	DESCRIPTION	XB	XB2				REMARKS
25	97E95–06510	BOLT, HEXAGON W/W DEEP RECESS	1	1				
26	90465–13M18	CLAMP	1	1				
27	6EK–43126–00	PIN, UPPER SHOCK MOUNT	1	1				
28	90386–18M35	BUSH	2	2				
29	90386–18001	BUSH	1	1				
30	93410–18M05	CIRCLIP	2	2				
31	6EK–43818–00	PIN, LOWER SHOCK MOUNT	1	1				
32	6H1–43834–10	PIPE	1	1				
33	90383–20001	BUSH, FORMED	1	1				
34	90201–10060	WASHER, PLATE	2	2				
35	90119–10054	BOLT, WITH WASHER	2	2				
36	6H1–45251–03	ANODE	1	1				
37	90119–06276	BOLT, WITH WASHER	2	2				
38	6EK–44536–00	PLATE 2	1	1				
39	97E95–06616	BOLT, HEXAGON W/W DEEP RECESS	2	2				
40	95D95–06010	BOLT, FLANGE DEEP RECESS	1	1				
41	90101–12065	BOLT (L:130MM)	2	2				UR
	90101–12066	BOLT (L:150MM)	2	2				UR
42	90201–13M01	WASHER, PLATE	8	8				
43	90201–12426	WASHER, PLATE	4	4				
44	95380–12600	NUT	8	8				

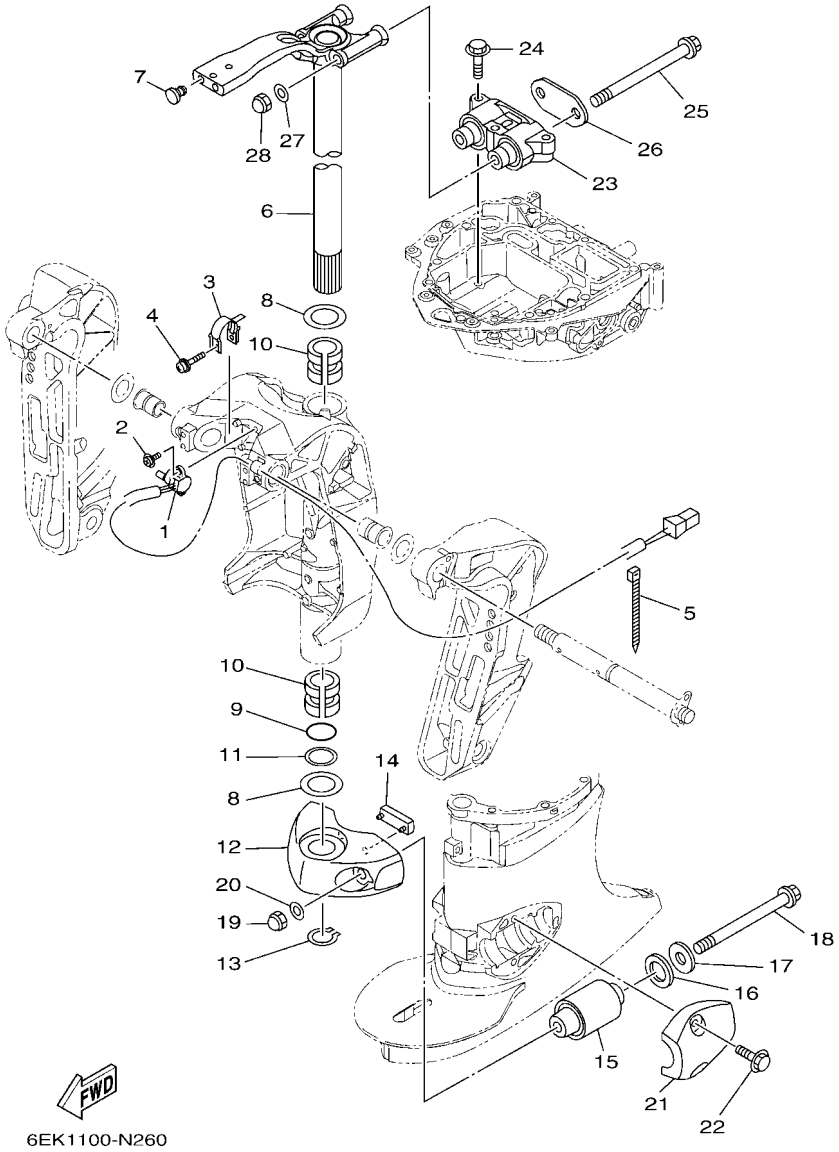

FIG. 26 BRACKET 2

REF. NO.	PART NO.	DESCRIPTION	XB	XB2				REMARKS
1	67H–83672–02	TRIM SENDER	1	1				
2	97985–06216	SCREW, WITH WASHER	2	2				
3	64E–43139–11	CAM, TRIM SENDER	1	1				
4	90159–05059	SCREW, WITH WASHER	1	1				
5	90465–11M10	CLAMP	2	2				
6	6EK–42510–10–8D	STEERING BRACKET ASSY	1					GRAY, X(25.3")
	6EK–42510–10–CE	STEERING BRACKET ASSY		1				WHITE, X(25.3")
7	90338–08174	PLUG	2	2				
8	90201–38M60	WASHER, PLATE	2	2				
9	93210–37MH7	O-RING	1	1				
10	90386–38M32	BUSH	2	2				
11	90202–40M47	WASHER, PLATE	1	1				
12	6EK–44551–00–8D	HOUSING, LOWER MOUNT RUBBER 1	1					GRAY
	6EK–44551–00–CE	HOUSING, LOWER MOUNT RUBBER 1		1				WHITE
13	93410–37M04	CIRCLIP	1	1				
14	61A–44575–01	DAMPER, LOWER MOUNT RUBBER	1	1				
15	63P–44555–00	MOUNT DAMPER, LOWER SIDE	2	2				
16	90202–32M19	WASHER, PLATE	2	2				
17	90201–16M55	WASHER, PLATE	2	2				
18	90105–14013	BOLT, FLANGE	2	2				
19	90176–14002	NUT, CROWN	2	2				
20	92995–14600	WASHER	2	2				
21	6EK–44553–00–8D	COVER, LOWER MOUNT	2					GRAY
	6EK–44553–00–CE	COVER, LOWER MOUNT		2				WHITE
22	90119–10058	BOLT, WITH WASHER	4	4				
23	6EK–44514–00	MOUNT DAMPER, UPPER SIDE	1	1				
24	95D75–10060	BOLT, FLANGE DEEP RECESS	3	3				

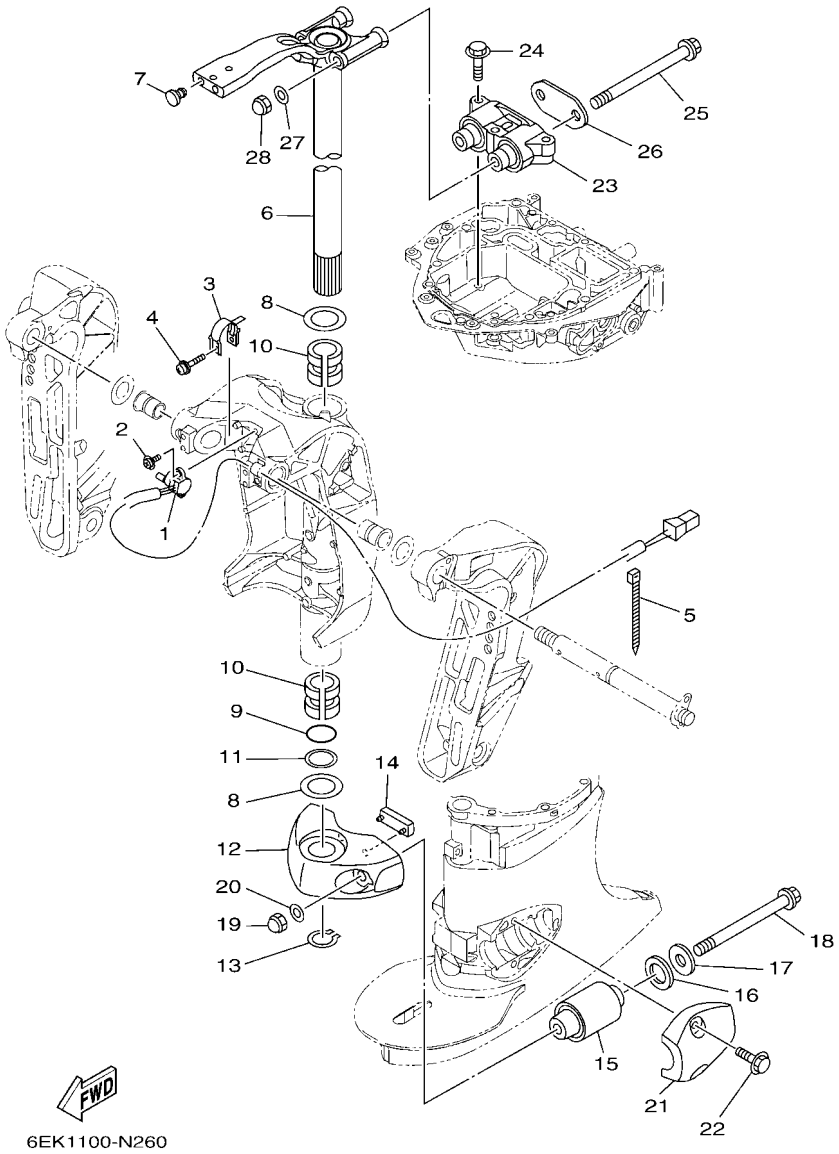

FIG. 26 BRACKET 2

REF. NO.	PART NO.	DESCRIPTION	XB	XB2				REMARKS
25	90105–14007	BOLT, FLANGE	2	2				
26	6EK–44526–00	PLATE	1	1				
27	92995–14600	WASHER	2	2				
28	90176–14002	NUT, CROWN	2	2				

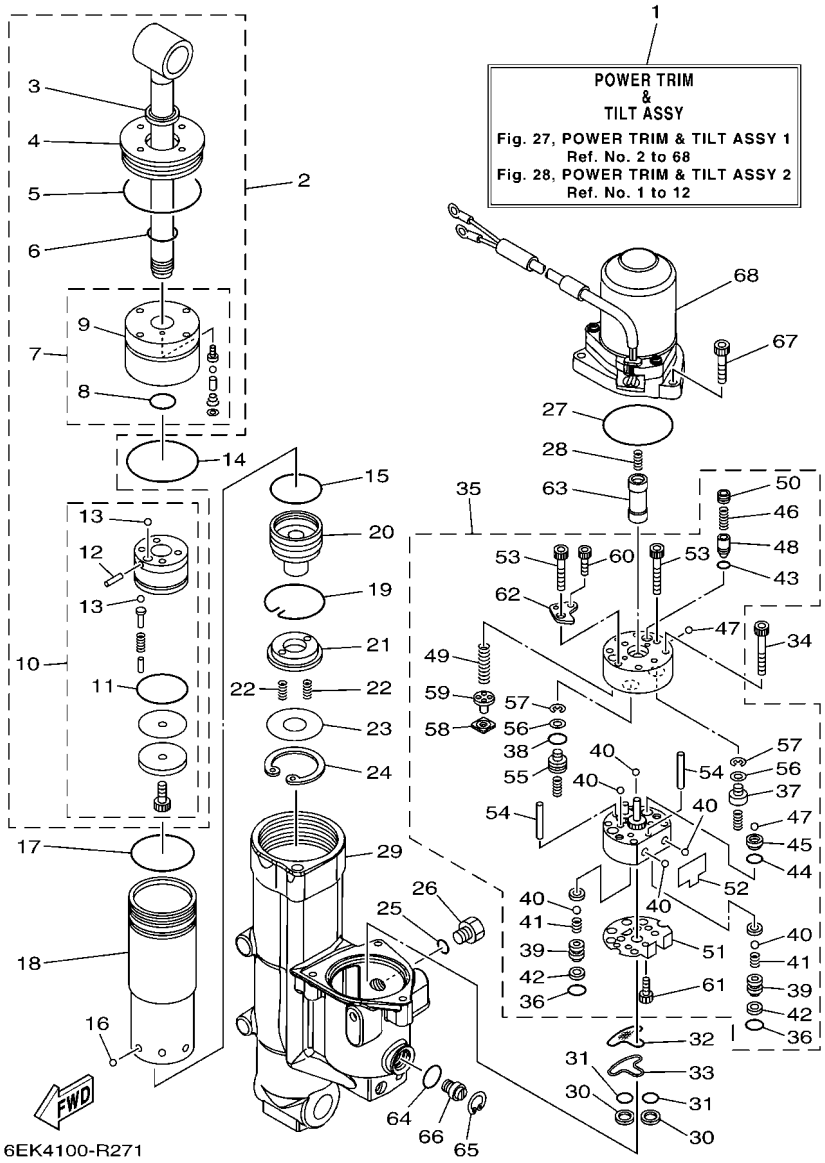

FIG. 27 POWER TRIM & TILT ASSY 1

REF. NO.	PART NO.	DESCRIPTION	XB	XB2				REMARKS
1	6EK–43800–04	POWER TRIM & TILT ASSY	1	1				
2	6EK–43810–00	TILT PISTON SUB ASSY	1	1				
3	6H1–43812–00	.SEAL, DUST	1	1				
4	6EK–43821–00	.SCREW, TRIM CYLINDER END	1	1				
5	6EK–43861–00	.O-RING	1	1				
6	6D8–43861–00	.O-RING	1	1				
7	6EK–4380R–00	.CYLINDER END SUB ASSY	1	1				
8	6D8–43861–00	..O-RING	1	1				
9	6EK–43811–00	..SCREW, CYLINDER END	1	1				
10	6EK–4380P–00	.PISTON SUB ASSY	1	1				
11	6H1–43862–00	..O-RING	1	1				
12	91609–16012	..PIN, SPRING	1	1				
13	93505–32038	..BALL	5	5				
14	67F–43865–00	O-RING	1	1				
15	6H1–43862–00	O-RING	1	1				
16	93503–16003	BALL	6	6				
17	7BB–G3861–00	O-RING	1	1				
18	6EK–22471–01	CYLINDER, SHOCK ABSORBER	1	1				
19	6EK–43875–00	RING, SNAP	1	1				
20	6EK–4381B–00	FREE PISTON SUB ASSY	1	1				
21	6EK–43899–00	PLATE STOPPER	1	1				
22	62X–4384H–00	SPRING	2	2				
23	6EK–22434–00	PLATE, VALVE 1	1	1				
24	99009–47500	CIRCLIP	1	1				
25	93210–09165	O-RING	1	1				
26	6EK–43829–00	PLUG, RESERVOIR	1	1				
27	93210–68N50	O-RING	1	1				

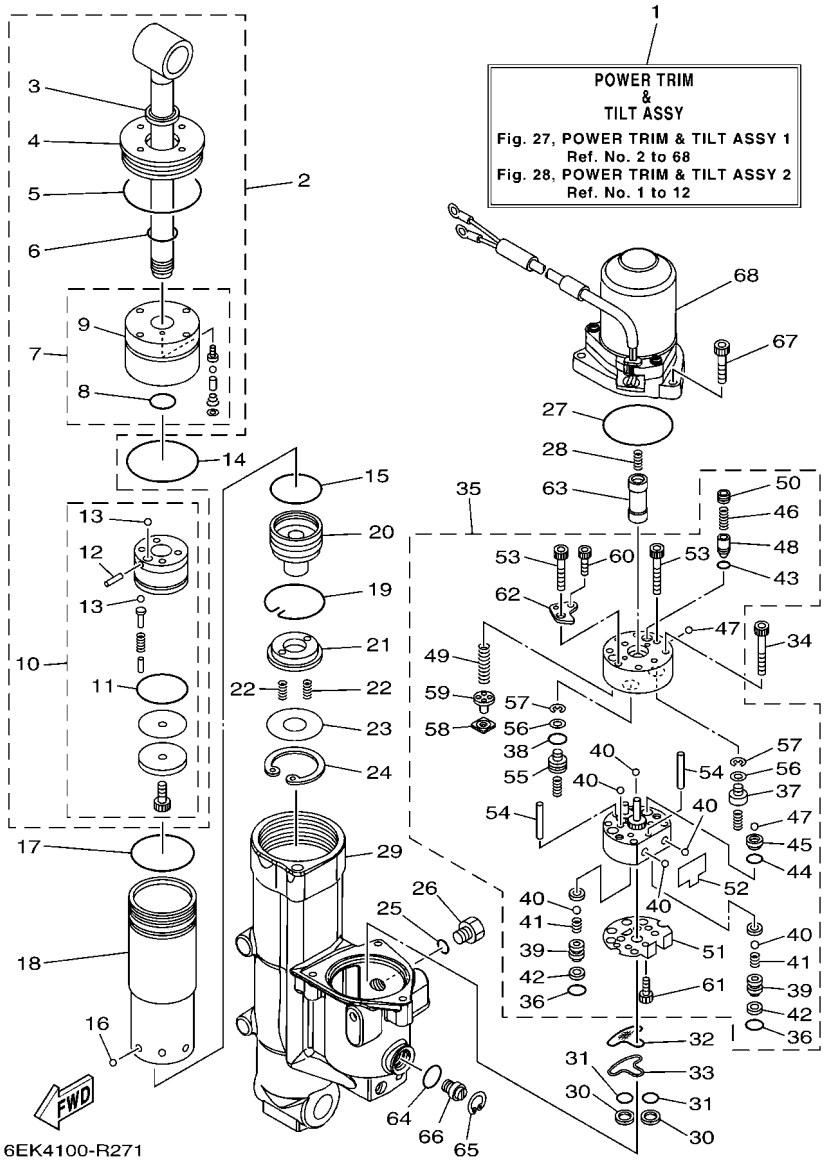

FIG. 27 POWER TRIM & TILT ASSY 1

REF. NO.	PART NO.	DESCRIPTION	XB	XB2				REMARKS
28	62X–4384H–00	SPRING	1	1				
29	6EK–4380K–04	CYLINDER, TILT SUB ASSY	1	1				
30	6C6–43817–00	FILTER 2	2	2				
31	69J–4389J–00	O-RING	2	2				
32	6C5–43816–00	FILTER 1	1	1				
33	6C5–4380G–00	PLATE	1	1				
34	91318–05045	BOLT	4	4				
35	6EK–43830–00	GEAR PUMP ASSY	1	1				
36	69J–4389J–00	.O-RING	2	2				
37	6D8–4384M–00	.PISTON, SHUTTLE 2	1	1				
38	6H1–43883–00	.O-RING	1	1				
39	6EK–4382E–00	.ADAPTOR 2	2	2				
40	93505–32038	.BALL	6	6				
41	6C6–43853–00	.SPRING, MAIN VALVE	2	2				
42	6C6–4387G–00	.WASHER	2	2				
43	93210–04N51	.O-RING	1	1				
44	93210–064A5	.O-RING	1	1				
45	6D8–43851–00	.SEAT, RELIEF VALVE	1	1				
46	6C5–43855–10	.SPRING, UP RELIEF	1	1				
47	93501–08001	.BALL	2	2				
48	6D8–43844–00	.PIN, VALVE SUPPORT	1	1				
49	6EK–43856–00	.SPRING, DOWN RELIEF	1	1				
50	6D8–43843–00	.SCREW, VALVE LOCK	1	1				
51	6C5–43895–00	.SEAT, RELIEF VALVE	1	1				
52	6C5–43854–00	.SPRING, MANUAL RELEASE	1	1				
53	91318–05030	.BOLT	2	2				
54	93604–26256	.PIN, DOWEL	2	2				

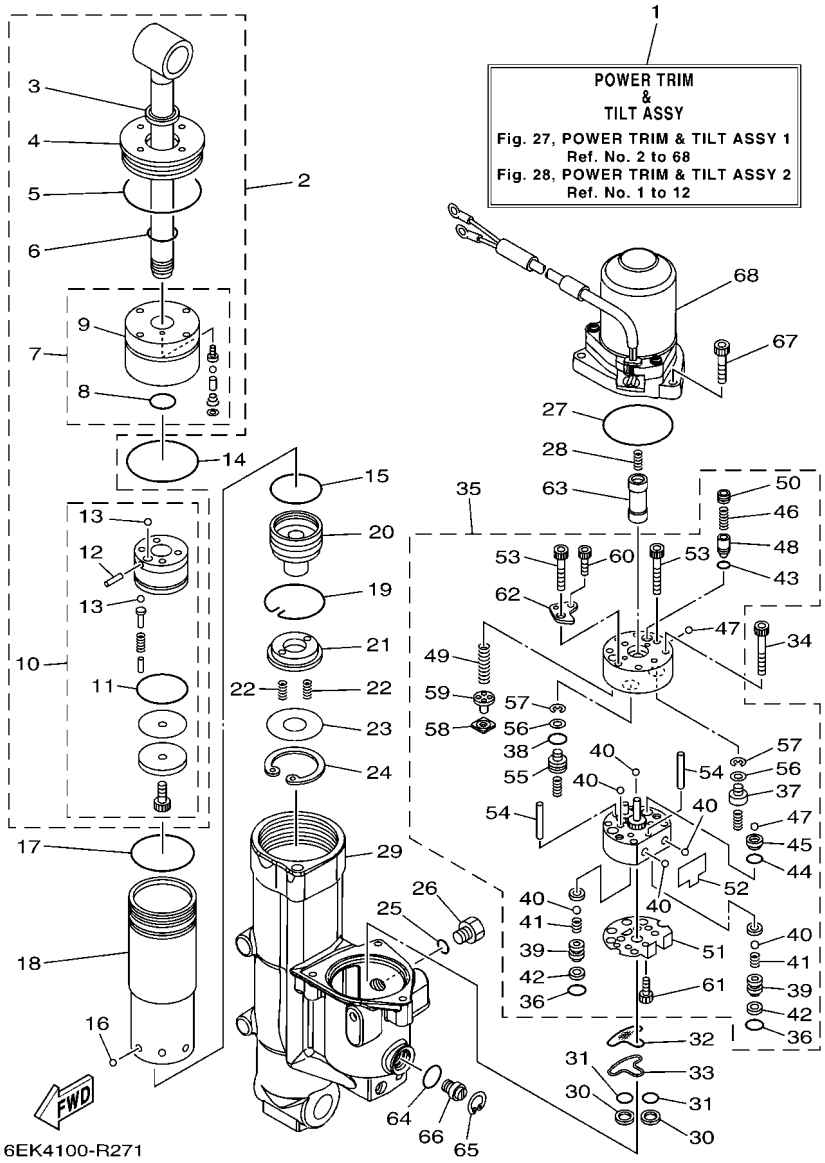

FIG. 27 POWER TRIM & TILT ASSY 1

REF. NO.	PART NO.	DESCRIPTION	XB	XB2				REMARKS
55	6D8–43841–00	.PISTON, SHUTTLE	1	1				
56	69A–4384F–00	.SEAL, MAIN VALVE	2	2				
57	99002–03600	.CIRCLIP	2	2				
58	6H1–4384G–11	.SEAL, RELIEF VALVE	1	1				
59	6H1–43844–10	.PIN, VALVE SUPPORT	1	1				
60	91318–03025	.BOLT	2	2				
61	91318–03005	.BOLT	1	1				
62	6D8–4382L–00	.CAP, RELIEF VALVE	1	1				
63	6EK–43831–00	CONNECTOR, SHAFT	1	1				
64	6D8–43863–00	O-RING	1	1				
65	6H1–43875–00	RING, SNAP	1	1				
66	6EK–43845–00	SCREW, MANUAL RELEASE	1	1				
67	91380–06025	BOLT	3	3				
68	6EK–43880–13	MOTOR ASSY	1	1				REFER TO FIG.28

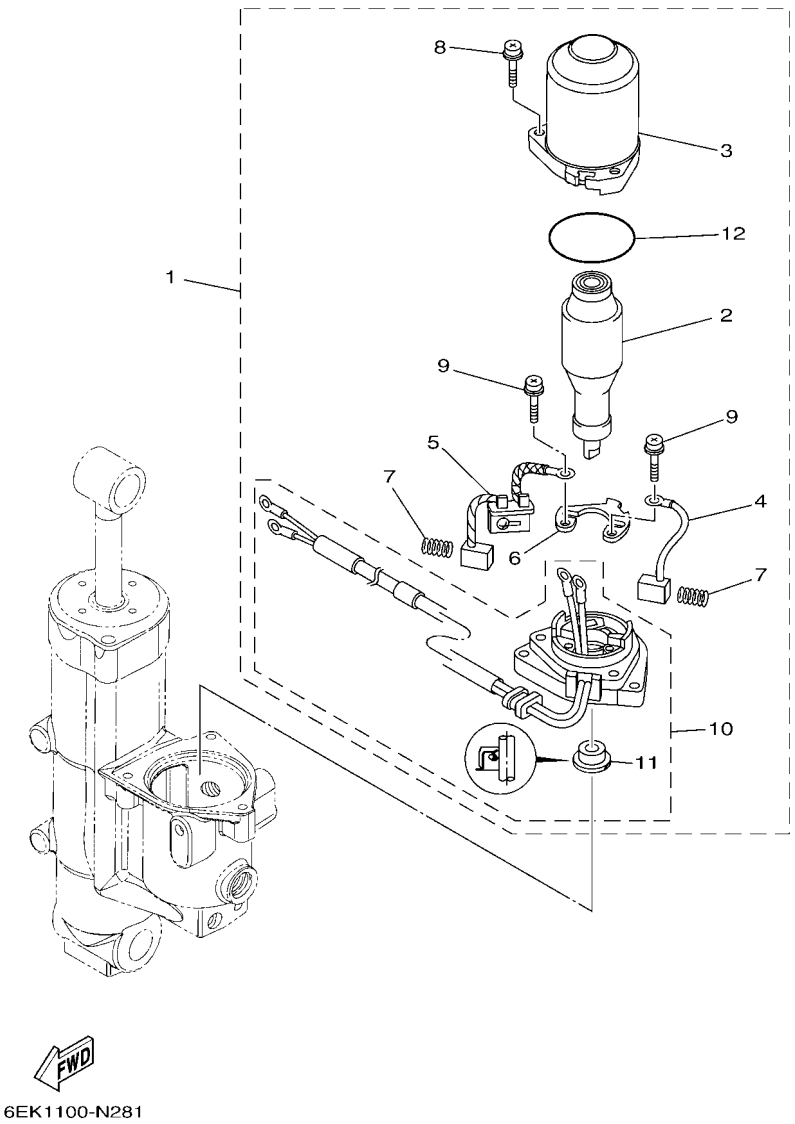

FIG. 28 POWER TRIM & TILT ASSY 2

REF. NO.	PART NO.	DESCRIPTION	XB	XB2				REMARKS
1	6EK–43880–13	MOTOR ASSY	1	1				
2	6EK–43805–01	.ARMATURE ASSY	1	1				
3	6EK–43804–11	.STATOR ASSY	1	1				
4	6EK–43892–00	.BRUSH 2	1	1				
5	6EK–82181–00	.CIRCUIT BREAKER COMP.	1	1				
6	6EK–4380F–00	.PLATE, BRUSH HOLDER	1	1				
7	62X–4386K–00	.SPRING, BRUSH	2	2				
8	63P–43879–10	.SCREW, WITH WASHER	3	3				
9	97602–04316	.SCREW, PAN HEAD WITH WASHER	2	2				
10	6EK–43881–13	.FRAME, END	1	1				
11	6EK–43882–00	..OIL SEAL	1	1				
12	6EK–43862–01	.O-RING	1	1				

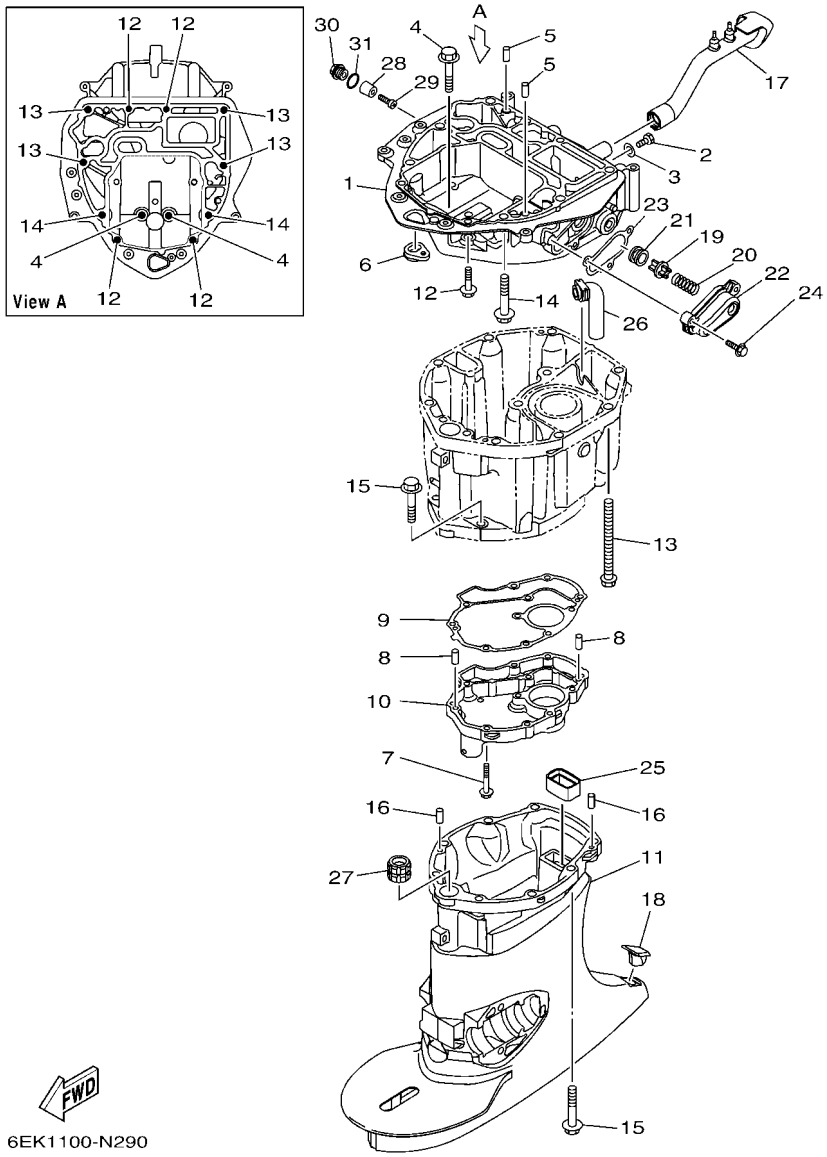

FIG. 29 UPPER CASING

REF. NO.	PART NO.	DESCRIPTION	XB	XB2				REMARKS
1	6EK–41137–01	GUIDE, EXHAUST	1	1				
2	97D95–08014	BOLT, HEXAGON DEEP RECESS	1	1				
3	90430–08143	GASKET	1	1				
4	97E75–10545	BOLT, HEXAGON W/W DEEP RECESS	2	2				
5	93608–12M05	PIN, DOWEL	2	2				
6	6EK–42727–01	GROMMET	1	1				
7	95D95–06030	BOLT, FLANGE DEEP RECESS	11	11				
8	93606–12019	PIN, DOWEL	2	2				
9	6EK–41134–00	GASKET, EXHAUST MANIFOLD	1	1				
10	6EK–45181–01	PLATE	1	1				
11	6EK–45111–10–8D	CASING, UPPER	1					GRAY, X(25.3")
	6EK–45111–10–CE	CASING, UPPER		1				WHITE, X(25.3")
12	97E75–08535	BOLT, HEXAGON W/W DEEP RECESS	4	4				
13	90119–10007	BOLT, WITH WASHER	4	4				
14	97E75–10545	BOLT, HEXAGON W/W DEEP RECESS	2	2				
15	97E75–10545	BOLT, HEXAGON W/W DEEP RECESS	8	8				
16	93606–12019	PIN, DOWEL	2	2				
17	6EK–42769–01	SEAL, RUBBER	1	1				
18	6C5–45155–01	CAP	1	1				
19	6G5–12416–00	VALVE, PRESSURE CONTROL	1	1				
20	90501–200A2	SPRING, COMPRESSION	1	1				
21	90480–20M05	GROMMET	1	1				
22	6EK–1246A–00–9S	COVER 1	1	1				
23	6EK–12435–A0	GASKET	1	1				
24	95D95–06025	BOLT, FLANGE DEEP RECESS	3	3				
25	67F–45127–00	SEAL	1	1				
26	6EK–45135–00	PIPE	1	1				

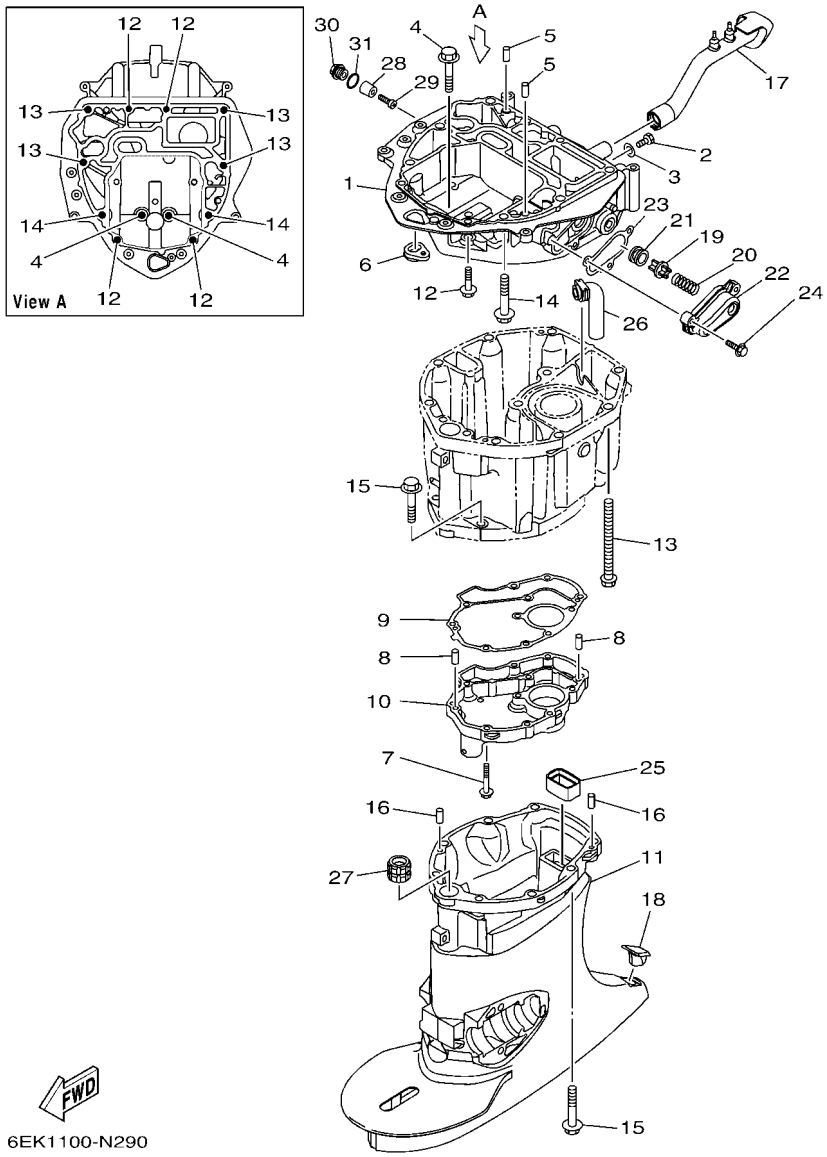

FIG. 29 UPPER CASING

REF. NO.	PART NO.	DESCRIPTION	XB	XB2				REMARKS
27	6EK–45318–00	BUSHING, DRIVE SHAFT	1	1				X(25.3")
28	6G8–11325–00	ANODE	1	1				
29	98980–05025	SCREW, BIND	1	1				
30	6G8–11197–A0	PLUG, BLIND	1	1				
31	93210–13M63	O-RING	1	1				

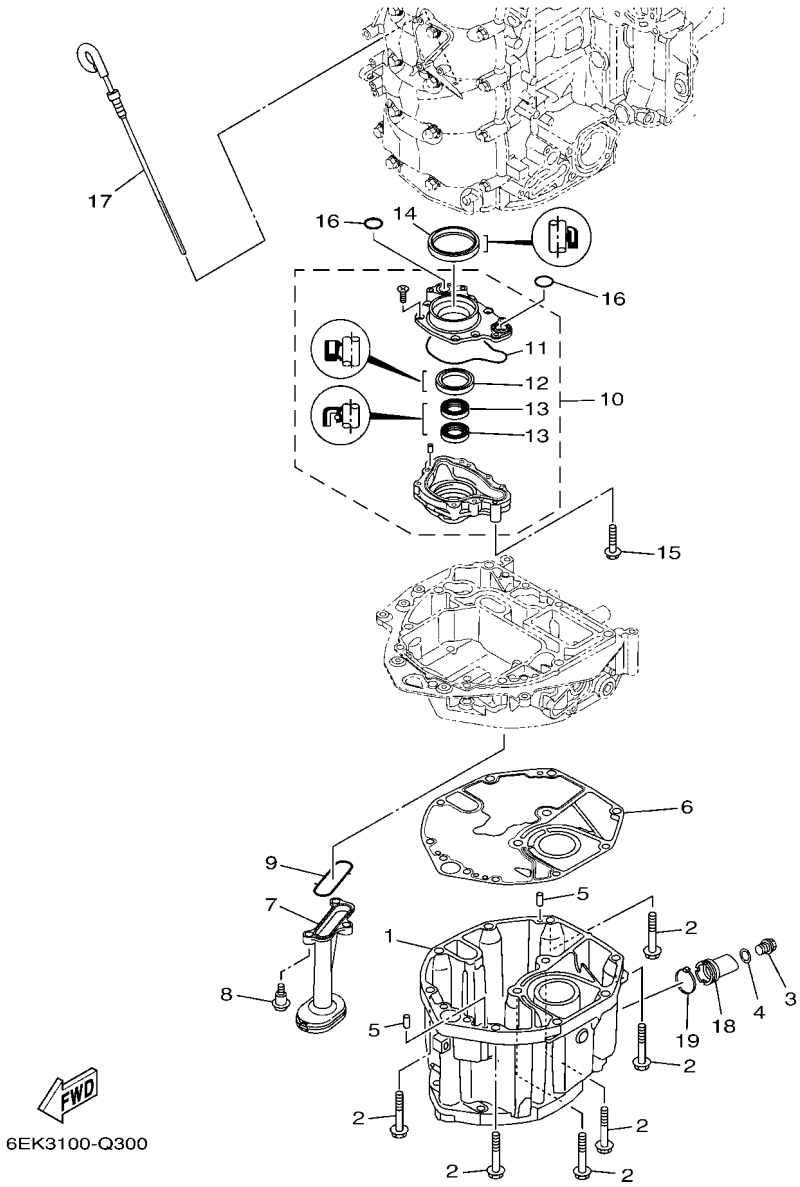

FIG. 30 OIL PAN

REF. NO.	PART NO.	DESCRIPTION	XB	XB2				REMARKS
1	6EK–15311–01	OIL PAN	1	1				
2	97E75–10545	BOLT, HEXAGON W/W DEEP RECESS	6	6				
3	90340–14M06	PLUG, STRAIGHT SCREW	1	1				
4	90430–14M09	GASKET	1	1				
5	93606–12019	PIN, DOWEL	2	2				
6	6EK–15312–00	GASKET, OIL PAN	1	1				
7	67F–13411–00	STRAINER, OIL	1	1				
8	90109–06292	BOLT	3	3				
9	67F–13415–00	SEAL, OIL STRAINER	1	1				
10	6EK–13300–00	OIL PUMP ASSY	1	1				
11	6EK–13329–00	.GASKET, PUMP COVER	1	1				
12	6AW–13119–00	.OIL SEAL	1	1				
13	69J–13631–00	.OIL SEAL	2	2				
14	69J–11355–00	SEAL, CYLINDER 1	1	1				
15	90105–06151	BOLT, FLANGE	4	4				
16	93210–19MJ1	O-RING	2	2				
17	6EK–15362–10	PLUG, OIL LEVEL	1	1				
18	6EK–15316–00	DAMPER 1	1	1				
19	90465–11M59	CLAMP	1	1				

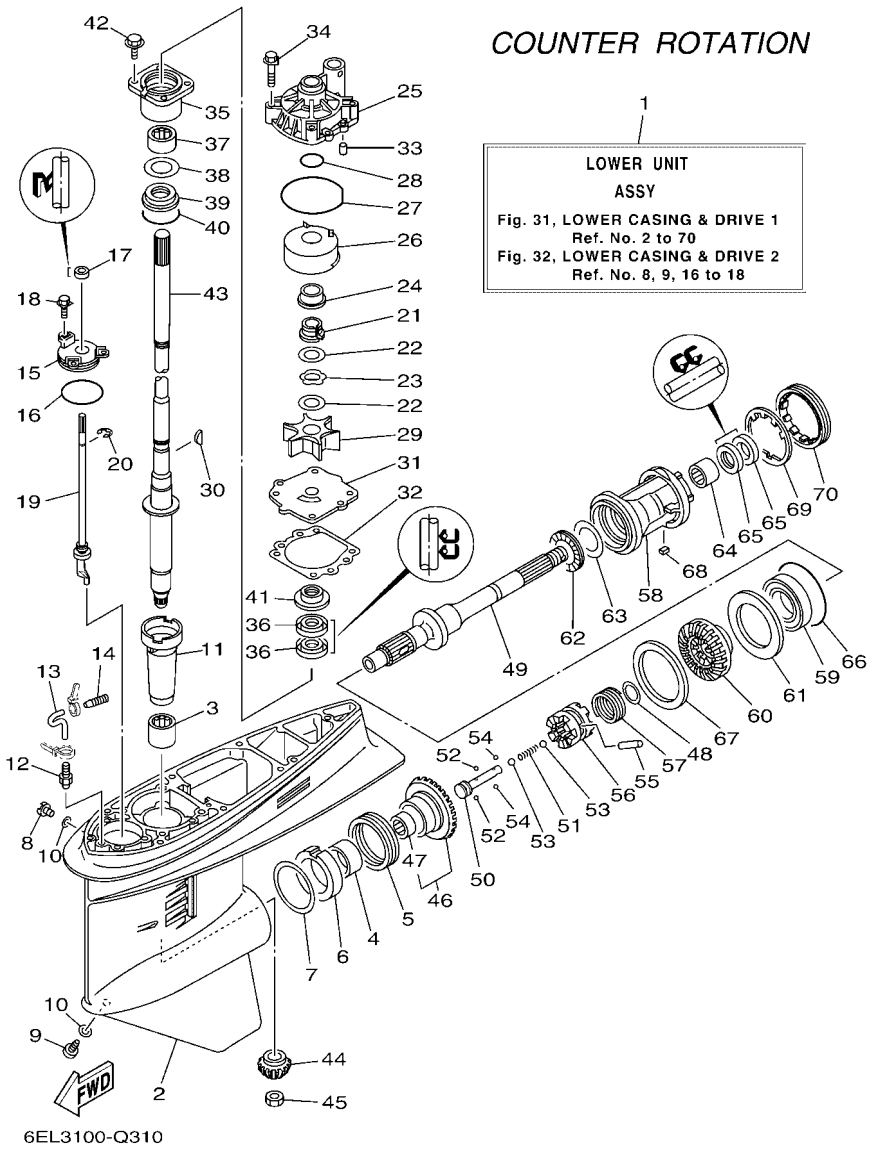

FIG. 31 LOWER CASING & DRIVE 1

REF. NO.	PART NO.	DESCRIPTION	XB	XB2				REMARKS
1	6EL–45300–13–8D	LOWER UNIT ASSY	1					GRAY, X(25.3"),LH
	6EL–45300–13–CE	LOWER UNIT ASSY		1				WHITE, X(25.3"),LH
2	6E5–45301–07–8D	CASING, LOWER	1					GRAY
	6E5–45301–07–CE	CASING, LOWER		1				WHITE
3	93315–628U9	BEARING	1	1				
4	93315–345W0	BEARING	1	1				
5	93341–360U8	BEARING	1	1				
6	6L6–45538–00	SPACER 1	1	1				
7	6E5–45567–01	SHIM (T:0.10MM)	1	1				UR
	6E5–45567–10	SHIM (T:0.12MM)	1	1				UR
	6E5–45567–20	SHIM (T:0.15MM)	1	1				UR
	6E5–45567–30	SHIM (T:0.18MM)	1	1				UR
	6E5–45567–40	SHIM (T:0.30MM)	1	1				UR
	6E5–45567–50	SHIM (T:0.40MM)	1	1				UR
	6E5–45567–60	SHIM (T:0.50MM)	1	1				UR
8	90340–08002	PLUG, STRAIGHT SCREW	1	1				
9	688–45341–10	PLUG, DRAIN	1	1				
10	90430–08003	GASKET	2	2				
11	6E5–45536–00	SLEEVE, DRIVE SHAFT	1	1				
12	6E5–45378–00	NIPPLE, HOSE	1	1				
13	90445–07ME9	HOSE (L120)	1	1				X(25.3")
14	6E5–83558–10	END, NIPPLE	1	1				
15	6E5–45321–00	PLATE	1	1				
16	93210–58144	O-RING	1	1				
17	93106–09014	OIL SEAL	1	1				
18	90119–06286	BOLT, WITH WASHER	3	3				
19	6L6–44150–02	SHIFT CAM ASSY	1	1				

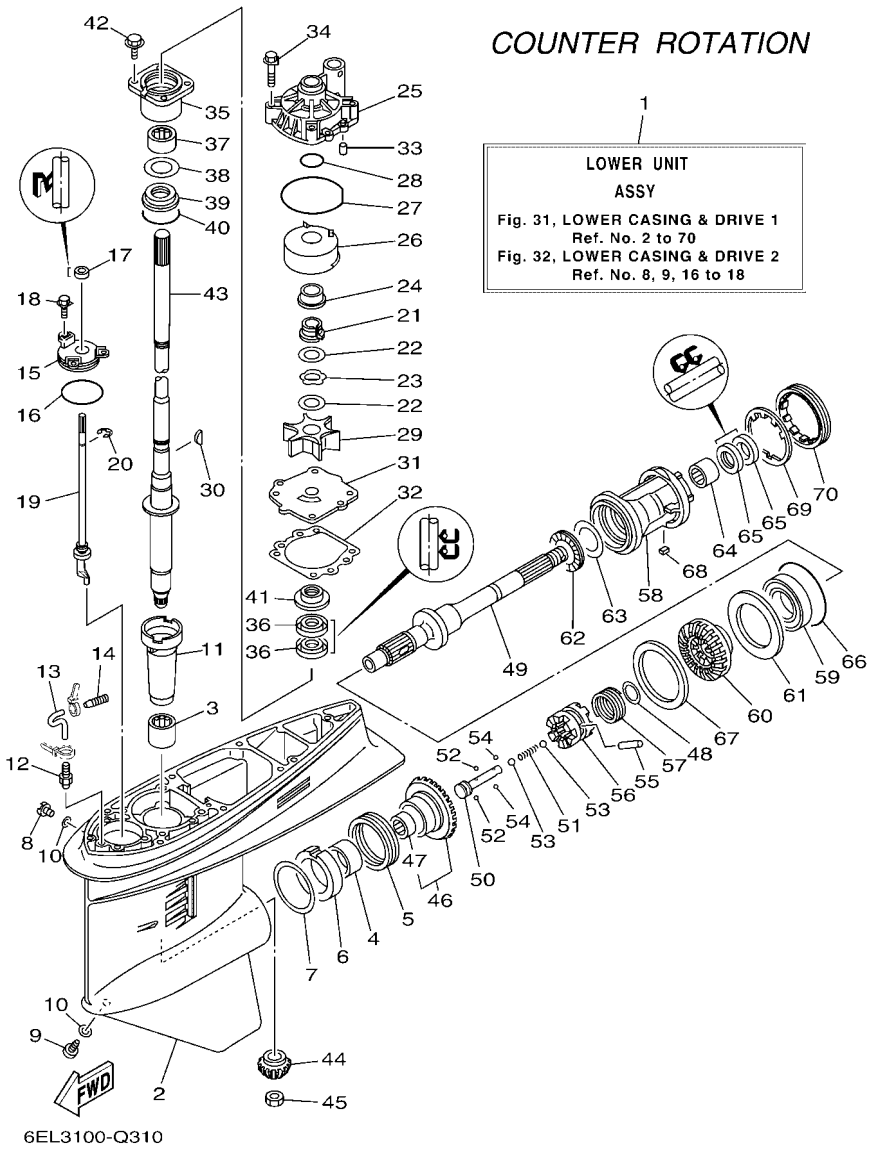

FIG. 31 LOWER CASING & DRIVE 1

REF. NO.	PART NO.	DESCRIPTION	XB	XB2				REMARKS
20	99001–08600	CIRCLIP	1	1				
21	61A–45538–00	SPACER 1	1	1				
22	90201–22M01	WASHER, PLATE	2	2				
23	90206–22M19	WASHER, WAVE	1	1				
24	61A–45527–00	COLLAR, DRIVE SHAFT	1	1				
25	61A–44311–01	HOUSING, WATER PUMP	1	1				
26	61A–44322–02	INSERT, CARTRIDGE	1	1				
27	93210–86M38	O-RING	1	1				
28	93210–37160	O-RING	1	1				
29	6E5–44352–01	IMPELLER	1	1				
30	90280–04M05	KEY, WOODRUFF	1	1				
31	6EK–44323–00	OUTER PLATE, CARTRIDGE	1	1				
32	6E5–44315–A0	GASKET, WATER PUMP	1	1				
33	93606–12019	PIN, DOWEL	2	2				
34	90119–08191	BOLT, WITH WASHER	4	4				
35	6E5–45331–00–9S	HOUSING, BEARING	1	1				
36	93101–28M16	OIL SEAL	2	2				
37	93317–330U2	BEARING	1	1				
38	6E5–45587–01	SHIM (T:0.10MM)	1	1				UR
	6E5–45587–10	SHIM (T:0.12MM)	1	1				UR
	6E5–45587–20	SHIM (T:0.15MM)	1	1				UR
	6E5–45587–30	SHIM (T:0.18MM)	1	1				UR
	6E5–45587–40	SHIM (T:0.30MM)	1	1				UR
	6E5–45587–50	SHIM (T:0.40MM)	1	1				UR
	6E5–45587–60	SHIM (T:0.50MM)	1	1				UR
39	93341–930V2	BEARING	1	1				
40	93210–55M14	O-RING	1	1				

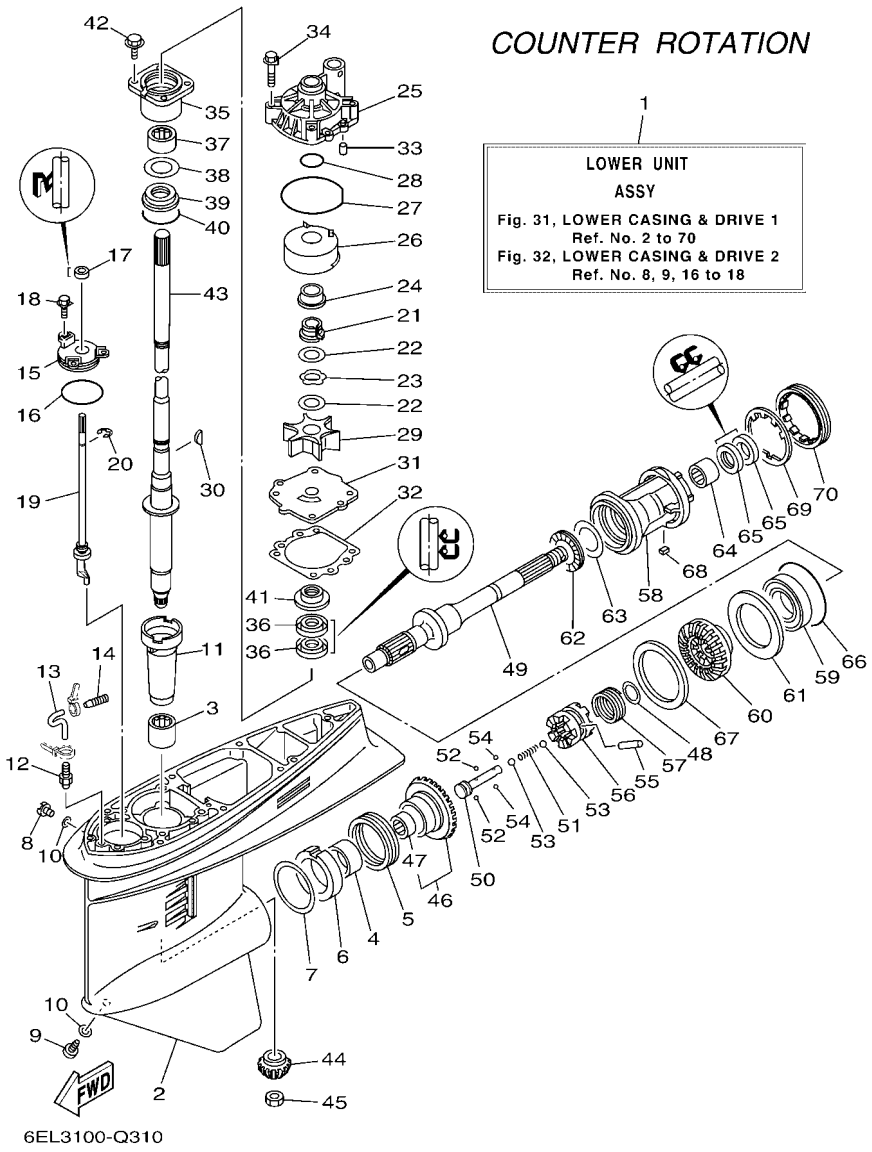

FIG. 31 LOWER CASING & DRIVE 1

REF. NO.	PART NO.	DESCRIPTION	XB	XB2				REMARKS
41	6E5–45344–00	COVER, OIL SEAL	1	1				
42	97E95–08525	BOLT, HEXAGON W/W DEEP RECESS	4	4				
43	6EK–45501–10	DRIVE SHAFT COMP.	1	1				X(25.3")
44	68V–45551–00	PINION (13T)	1	1				
45	90170–16M01	NUT	1	1				
46	68W–45560–00	GEAR 1 (28T)	1	1				
47	93315–425U7	.BEARING	1	1				
48	90201–26M00	WASHER, PLATE	1	1				
49	68W–45611–01	SHAFT, PROPELLER	1	1				
50	6E5–45634–02	SLIDE, SHIFT	1	1				
51	90501–16M37	SPRING, COMPRESSION	1	1				
52	93507–32009	BALL	2	2				
53	93511–32017	BALL	2	2				
54	93503–16003	BALL	2	2				
55	90250–08M07	PIN, STRAIGHT	1	1				
56	68V–45631–02	CLUTCH, DOG	1	1				
57	6E5–45633–01	RING, CROSS PIN	1	1				
58	6L6–45332–00–CA	HOUSING, BEARING	1	1				
59	93332–000V7	BEARING	1	1				
60	68W–45570–10	GEAR 2 (28T)	1	1				
61	6L6–45576–00	WASHER, THRUST 2	1	1				
62	93341–440U5	BEARING	1	1				
63	6K1–45578–01	SHIM (T:0.10MM)	1	1				UR
	6K1–45578–10	SHIM (T:0.12MM)	1	1				UR
	6K1–45578–20	SHIM (T:0.15MM)	1	1				UR
	6K1–45578–30	SHIM (T:0.18MM)	1	1				UR
	6K1–45578–40	SHIM (T:0.30MM)	1	1				UR

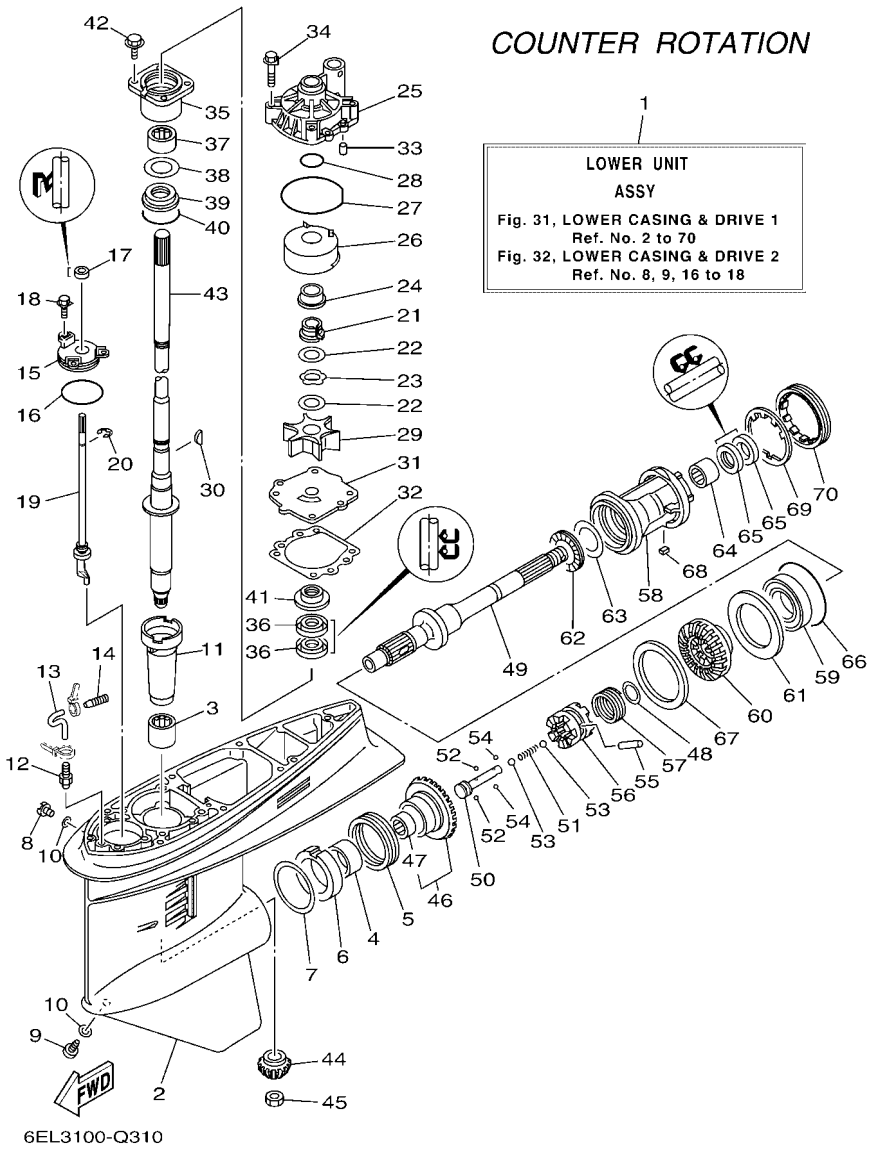

FIG. 31 LOWER CASING & DRIVE 1

REF. NO.	PART NO.	DESCRIPTION	XB	XB2				REMARKS
63	6K1–45578–50	SHIM (T:0.40MM)	1	1				UR
	6K1–45578–60	SHIM (T:0.50MM)	1	1				UR
64	93315–43061	BEARING	1	1				
65	93101–30M17	OIL SEAL	2	2				
66	93210–86M39	O-RING	1	1				
67	6L6–45577–00	SHIM (T:0.10MM)	1	1				UR
	6L6–45577–10	SHIM (T:0.12MM)	1	1				UR
	6L6–45577–20	SHIM (T:0.15MM)	1	1				UR
	6L6–45577–30	SHIM (T:0.18MM)	1	1				UR
	6L6–45577–40	SHIM (T:0.30MM)	1	1				UR
	6L6–45577–50	SHIM (T:0.40MM)	1	1				UR
	6L6–45577–60	SHIM (T:0.50MM)	1	1				UR
68	90282–04010	KEY, STRAIGHT	1	1				
69	688–45383–02	WASHER, CLAW	1	1				
70	688–45384–02	NUT	1	1				

FIG. 32 LOWER CASING & DRIVE 2

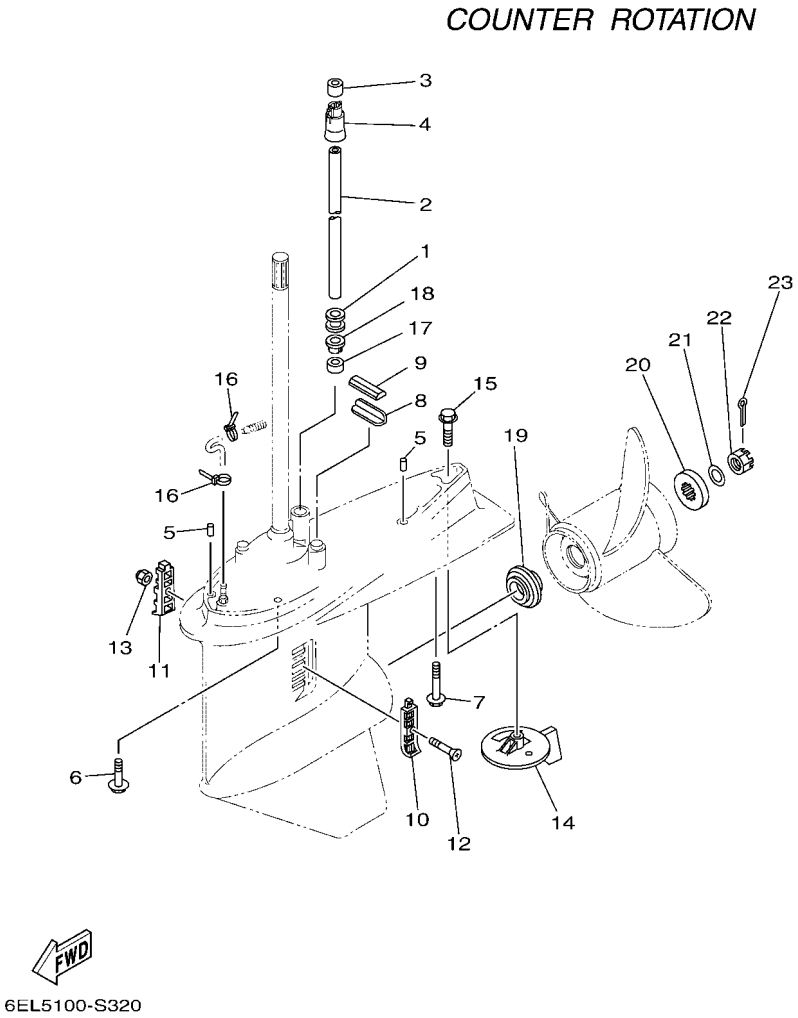

REF. NO.	PART NO.	DESCRIPTION	XB	XB2				REMARKS
1	6E5–44366–01	DAMPER, WATER SEAL 2	1	1				
2	90440–16002	PIPE (L294)	1	1				X(25.3")
3	6EK–44365–01	DAMPER, WATER SEAL 1	1	1				
4	6EK–44379–00	GUIDE, WATER TUBE	1	1				
5	93608–12M05	PIN, DOWEL	2	2				
6	97E95–10545	BOLT, HEXAGON W/W DEEP RECESS	6	6				
7	90119–10071	BOLT, WITH WASHER	1	1				
8	663–45376–00	GUIDE, SEAL DAMPER	1	1				
9	688–45375–00	DAMPER, SEAL	1	1				
10	688–45214–02	COVER, WATER INLET 1	1	1				
11	688–45215–02	COVER, WATER INLET 2	1	1				
12	90152–05M07	SCREW, COUNTERSUNK	1	1				
13	90185–05002	NUT, NYLON	1	1				
14	6L6–45371–00	TAB-TRIM	1	1				
15	90105–10M00	BOLT, FLANGE	1	1				
16	90465–11M10	CLAMP	2	2				
17	6E5–44365–01	DAMPER, WATER SEAL 1	1	1				
18	6E5–44312–00	COVER, WATER PUMP HOUSING	1	1				
19	63P–45987–00	SPACER 1	1	1				
20	688–45997–01	SPACER 2	1	1				
21	92990–18200	WASHER	1	1				
22	90171–18M04	NUT, CASTLE	1	1				
23	91490–40030	PIN. COTTER	1	1				

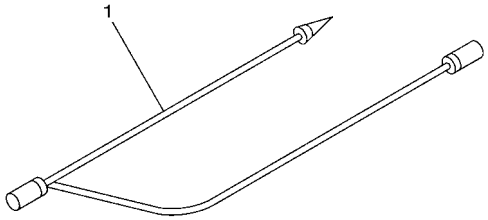

68WB110-L290

FIG. 33 OPTIONAL PARTS 1

REF. NO.	PART NO.	DESCRIPTION	XB	XB2				REMARKS
1	6H5–81315–00	LEAD WIRE ASSY	1	1				

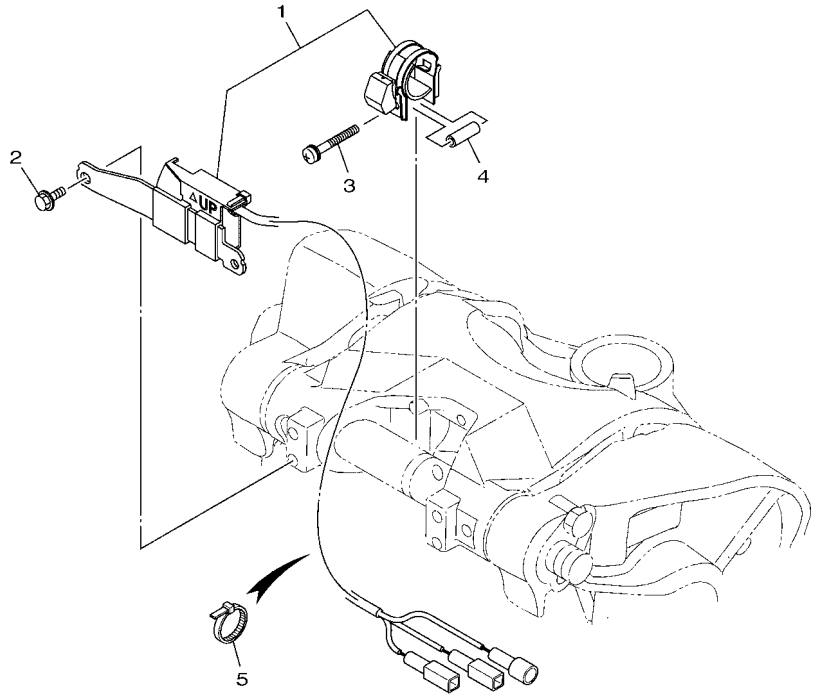

6EK3100-Q390

FIG. 34 OPTIONAL PARTS 2

REF. NO.	PART NO.	DESCRIPTION	XB	XB2				REMARKS
1	63P–825E0–02	TILT LIMIT SWITCH ASSY	1	1				
2	97E95–06516	BOLT, HEXAGON W/W DEEP RECESS	2	2				
3	90159–05059	SCREW, WITH WASHER	1	1				
4	90387–05004	COLLAR	1	1				
5	90465–11M10	CLAMP	5	5				

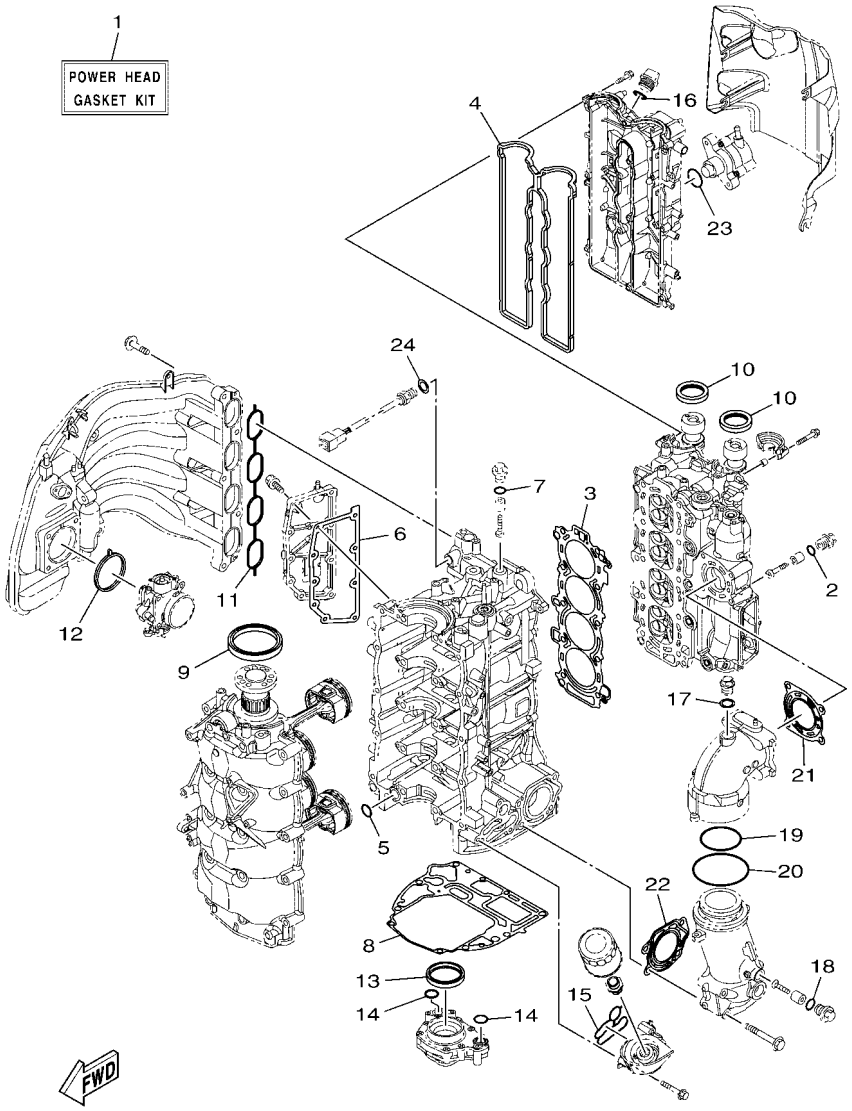

FIG. 35 REPAIR KIT 1

REF. NO.	PART NO.	DESCRIPTION	XB	XB2				REMARKS
1	6EK–W0001–01	POWER HEAD GASKET KIT	1	1				
2	93210–13M63	.O-RING	1	1				
3	6EK–11181–00	.GASKET, CYLINDER HEAD 1	1	1				
4	6EK–11193–00	.GASKET, HEAD COVER 1	1	1				
5	93210–19MJ1	.O-RING	1	1				
6	6EK–15353–01	.GASKET, DRAIN	1	1				
7	93210–13M63	.O-RING	1	1				
8	6EK–11351–00	.GASKET, CYLINDER	1	1				
9	93102–85008	.OIL SEAL	1	1				
10	93102–38008	.OIL SEAL	2	2				
11	6EK–13645–00	.GASKET, MANIFOLD 1	1	1				
12	6EK–13646–00	.GASKET, MANIFOLD 2	1	1				
13	69J–11355–00	.SEAL, CYLINDER 1	1	1				
14	93210–19MJ1	.O-RING	2	2				
15	6EK–13475–00	.GASKET	1	1				
16	93210–24M79	.O-RING	1	1				
17	90201–186F1	.WASHER, PLATE	1	1				
18	93210–13M63	.O-RING	1	1				
19	93210–64001	.O-RING	1	1				
20	93210–84001	.O-RING	1	1				
21	6EK–41114–00	.GASKET, EXHAUST OUTER COVER	1	1				
22	6EK–41124–00	.GASKET, EXHAUST OUTER COVER	1	1				
23	93210–30682	.O-RING	1	1				
24	90430–14115	.GASKET	1	1				

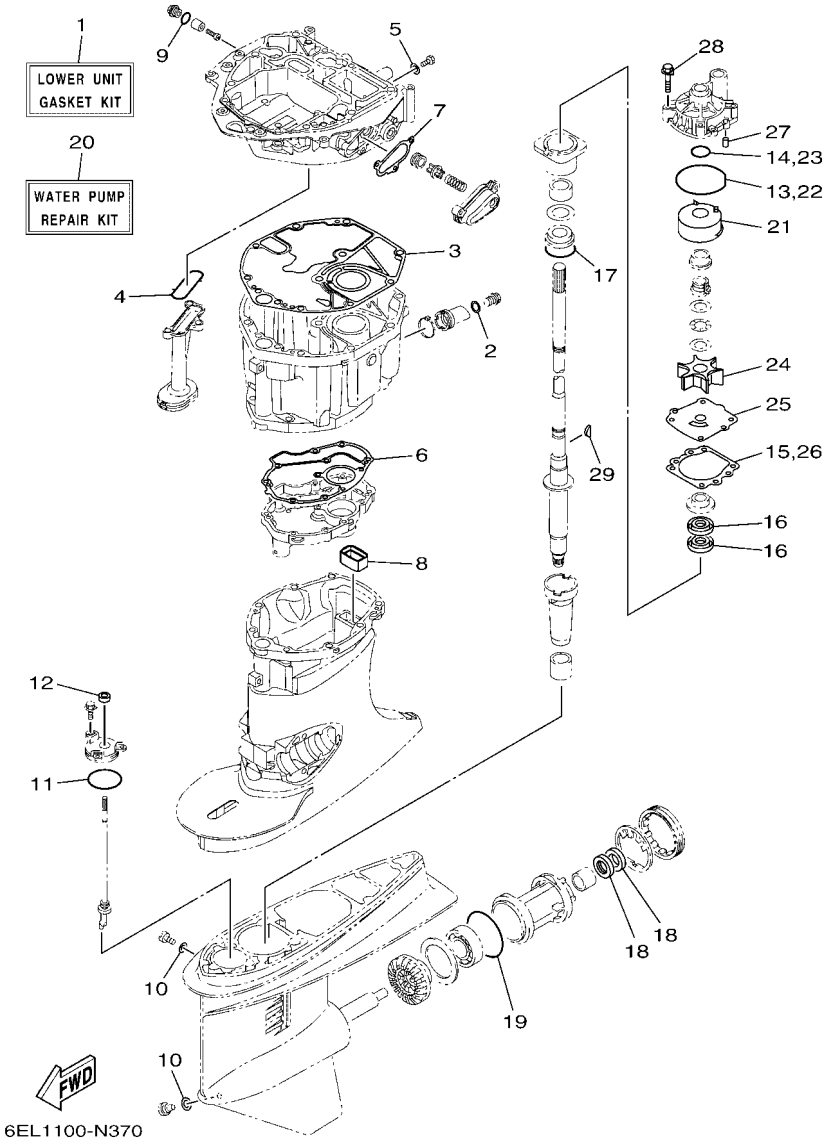

FIG. 36 REPAIR KIT 2

REF. NO.	PART NO.	DESCRIPTION	XB	XB2				REMARKS
1	6EK–W0001–20	LOWER UNIT GASKET KIT	1	1				
2	90430–14M09	.GASKET	1	1				
3	6EK–15312–00	.GASKET, OIL PAN	1	1				
4	67F–13415–00	.SEAL, OIL STRAINER	1	1				
5	90430–08143	.GASKET	1	1				
6	6EK–41134–00	.GASKET, EXHAUST MANIFOLD	1	1				
7	6EK–12435–A0	.GASKET	1	1				
8	67F–45127–00	.SEAL	1	1				
9	93210–13M63	.O-RING	1	1				
10	90430–08003	.GASKET	2	2				
11	93210–58144	.O-RING	1	1				
12	93106–09014	.OIL SEAL	1	1				
13	93210–86M38	.O-RING	1	1				
14	93210–37160	.O-RING	1	1				
15	6E5–44315–A0	.GASKET, WATER PUMP	1	1				
16	93101–28M16	.OIL SEAL	2	2				
17	93210–55M14	.O-RING	1	1				
18	93101–30M17	.OIL SEAL	2	2				
19	93210–86M39	.O-RING	1	1				
20	68V–W0078–01	WATER PUMP REPAIR KIT	1	1				
21	61A–44322–02	.INSERT, CARTRIDGE	1	1				
22	93210–86M38	.O-RING	1	1				
23	93210–37160	.O-RING	1	1				
24	6E5–44352–01	.IMPELLER	1	1				
25	6EK–44323–00	.OUTER PLATE, CARTRIDGE	1	1				
26	6E5–44315–A0	.GASKET, WATER PUMP	1	1				
27	93606–12019	.PIN, DOWEL	2	2				

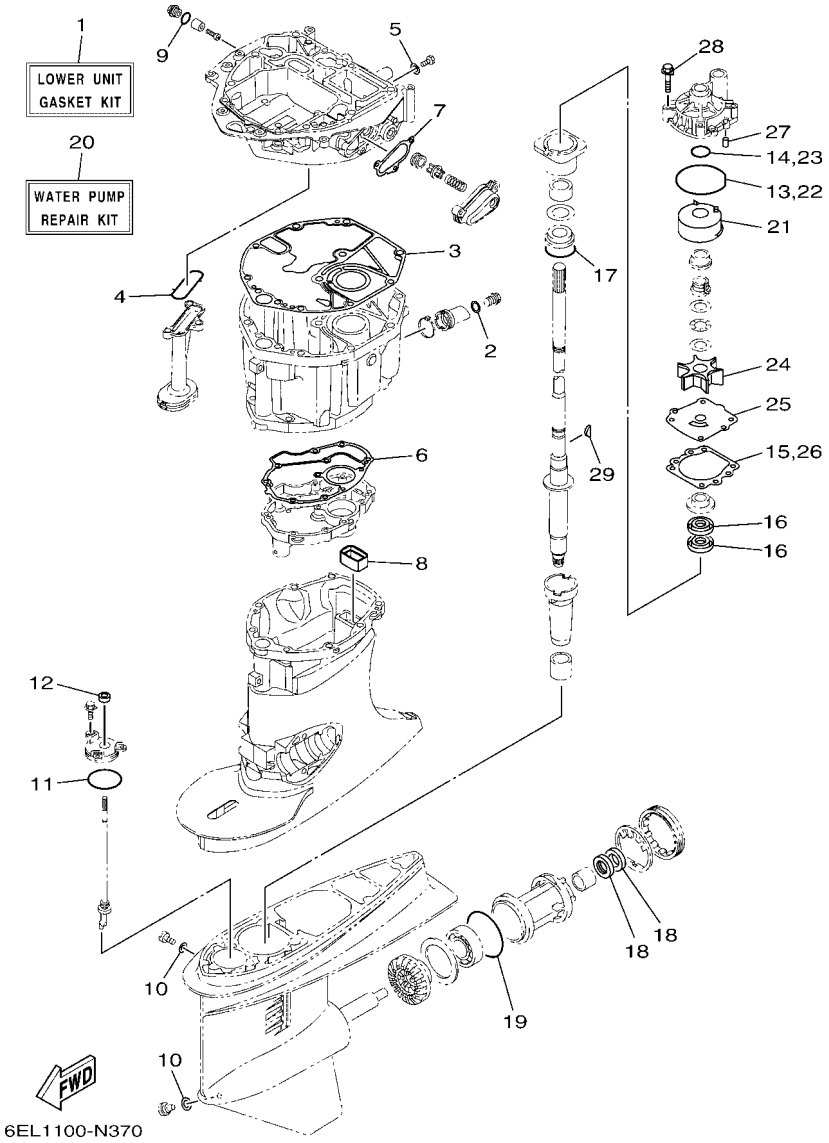

FIG. 36 REPAIR KIT 2

REF. NO.	PART NO.	DESCRIPTION	XB	XB2				REMARKS
28	90119–08191	.BOLT, WITH WASHER	4	4				
29	90280–04M05	.KEY, WOODRUFF	1	1				

PART NO.	REF. NO.
6EK–11110–00–9S	5 – 2
6EK–11119–00	5 – 32
6DA–11133–10	5 – 3
6EK–11168–00	5 – 26
6EK–11181–00	5 – 21
	35 – 3
6EK–11191–10	5 – 25
6EK–11192–01	5 – 30
6EK–11193–00	5 – 28
	35 – 4
6G8–11197–A0	3 – 15
	5 – 13
	12 – 9
	29 – 30
69J–11301–01	5 – 15
6EK–11313–00	3 – 4
6EK–11325–00	1 – 7
	12 – 8
6G8–11325–00	1 – 1
	1 – 4
	1 – 15
	3 – 13
	5 – 11
	29 – 28
63P–11325–01	1 – 2
	3 – 17
67F–11325–01	1 – 5
	5 – 16
67F–11328–01	5 – 17
6EK–11351–00	3 – 25
	35 – 8
69J–11355–00	30 – 14
	35 – 13
6CJ–11372–00	7 – 25
6EK–11410–01	4 – 1
6EK–11416–00	4 – 5
6EK–11416–10	4 – 5
6EK–11416–20	4 – 5
6EK–11416–30	4 – 5
6EK–11416–40	4 – 5
6EK–11417–00	4 – 6
6EK–11417–10	4 – 6
6EK–11417–20	4 – 6
6EK–11417–30	4 – 6
6EK–11417–40	4 – 6
6EK–11426–01	4 – 7
6EK–11427–00	4 – 8
6CB–11478–00	4 – 2

PART NO.	REF. NO.
6EK–11537–00	6 – 12
6EK–11567–00	6 – 13
6EK–11590–01	6 – 17
6EK–11603–01	4 – 12
6EK–11604–01	4 – 12
6EK–11631–02–94	4 – 11
6EK–11633–00	4 – 13
6EK–11635–02	4 – 11
6EK–11656–00	4 – 15
6EK–11656–10	4 – 15
6EK–11656–20	4 – 15
6EK–11656–30	4 – 15
6EK–11656–40	4 – 15
6EK–12111–00	6 – 1
30X–12114–00	6 – 4
62Y–12116–00	6 – 3
30X–12117–00	6 – 5
30X–12118–00	6 – 6
51Y–12119–00	6 – 7
6EK–12121–00	6 – 2
6D8–12153–00	6 – 8
6D8–12153–10	6 – 8
6D8–12153–20	6 – 8
6D8–12153–30	6 – 8
6D8–12153–40	6 – 8
6D8–12153–50	6 – 8
6D8–12153–60	6 – 8
6D8–12153–70	6 – 8
6D8–12153–80	6 – 8
6D8–12153–90	6 – 8
6D8–12153–A0	6 – 8
6D8–12153–B0	6 – 8
6D8–12153–C0	6 – 8
6D8–12153–D0	6 – 8
6D8–12153–E0	6 – 8
6D8–12153–F0	6 – 8
6D8–12153–G0	6 – 8
6D8–12153–H0	6 – 8
6D8–12153–J0	6 – 8
6D8–12153–K0	6 – 8
6D8–12153–L0	6 – 8
6D8–12153–M0	6 – 8
6D8–12153–N0	6 – 8
6D8–12153–P0	6 – 8
6D8–12153–R0	6 – 8
6D8–12153–S0	6 – 8
6D8–12153–T0	6 – 8
6D8–12153–U0	6 – 8

PART NO.	REF. NO.
6D8–12153–V0	6 – 8
6EK–12171–00	6 – 9
6EK–12181–00	6 – 10
6EK–12411–00	1 – 6
	3 – 19
6EK–12412–00	3 – 20
6EK–12413–00	3 – 21
6G5–12416–00	29 – 19
6EK–12435–A0	29 – 23
	36 – 7
6EK–1243A–00	3 – 23
6EK–1246A–00–9S	29 – 22
6EK–12483–00	3 – 26
6AW–12572–00	23 – 5
6EK–12576–00	9 – 8
6EK–12577–00	9 – 9
6R3–12581–00	23 – 7
6R3–12582–00	23 – 8
6R3–12583–00	23 – 9
6CB–13016–00	1 – 9
	10 – 5
6AW–13119–00	30 – 12
63P–13131–00	13 – 19
6AW–13132–00	10 – 21
6EK–13152–02	7 – 9
6EK–13160–01	8 – 3
6EK–13161–01	8 – 4
6EK–13300–00	30 – 10
6EK–13329–00	30 – 11
67F–13411–00	30 – 7
67F–13415–00	30 – 9
	36 – 4
6EK–13437–62	15 – 21
5GH–13440–71	1 – 3
	3 – 30
6EK–13446–00	3 – 32
6CB–13473–00	3 – 29
6EK–13475–00	3 – 33
	35 – 15
6EK–13490–00	3 – 28
6EK–13532–00	9 – 1
6EK–13543–00	7 – 27
6AW–13545–10	9 – 11
6EK–13546–00	9 – 16
6EK–13547–00	9 – 19
6EK–13548–01	9 – 22
6AW–13577–10	8 – 7
6CB–13593–00	10 – 18

PART NO.	REF. NO.
69J–13631–00	30 – 13
6EK–13641–01	7 – 12
6EK–13645–00	7 – 13
	35 – 11
6EK–13646–00	7 – 14
	35 – 12
6C5–13713–02	7 – 22
63P–13716–00	10 – 17
6EK–13751–00	7 – 1
6EK–13761–01	8 – 5
6AW–13781–00	10 – 25
6AW–13784–00	10 – 28
6EK–13843–00	7 – 28
6EK–13881–01	7 – 29
68V–13897–00	7 – 24
6CB–13906–01	10 – 8
68V–13907–22	10 – 19
63P–13915–00	1 – 10
	10 – 20
6AW–1410B–00	8 – 6
6DA–14146–00	10 – 10
6EK–14180–03	10 – 1
6EK–14181–00	10 – 11
6EK–14182–00	10 – 2
6P2–14191–00	10 – 12
6AW–14197–00	10 – 31
68V–14216–00	10 – 33
6CB–14216–00	10 – 6
6EK–14291–00	8 – 10
6P2–14386–00	10 – 27
6P2–1441J–01	7 – 19
6DA–14440–00	7 – 18
6CB–1447B–00	10 – 24
6CB–14546–00	10 – 23
6CB–14564–00	10 – 9
63P–14567–00	10 – 16
5PS–14568–00	9 – 2
6K8–14591–10	10 – 14
6EK–14615–10	12 – 1
6EK–14625–00	12 – 6
6EK–1475A–00	9 – 6
6EK–1475F–10	9 – 23
6EK–1475G–00	9 – 3
	9 – 25
6EK–1475H–00	10 – 34
6EK–1475J–00	10 – 35
6CB–14984–00	1 – 11
	10 – 26

PART NO.	REF. NO.
6CB–14985–00	10 – 22
6EK–14989–00	9 – 24
6EK–15109–02–9S	3 – 2
6EK–15311–01	30 – 1
6EK–15312–00	30 – 6
	36 – 3
6EK–15316–00	30 – 18
6EK–15353–01	3 – 11
	35 – 6
6EK–15362–10	30 – 17
6G8–15363–00	5 – 34
6EK–15373–10	7 – 16
6EK–15393–00	7 – 17
6EK–15414–00–9S	3 – 10
6EK–2134X–10	8 – 15
63D–21744–00	9 – 21
6E5–21744–00	9 – 20
6EK–22434–00	27 – 23
6EK–22471–01	27 – 18
68V–24149–00	13 – 27
6EK–2416A–10	9 – 5
6P2–24170–00	8 – 13
6FP–2419E–01	8 – 14
6CB–24217–00	10 – 7
6C5–24251–01	11 – 3
6EK–24311–00	13 – 15
6EK–24314–00	13 – 3
6EK–24330–01	11 – 2
6E5–24351–51	13 – 4
6YK–24360–73	14 – 1
68V–24374–00	13 – 22
6AW–24377–01	13 – 2
688–24378–00	9 – 14
68V–24379–10	10 – 32
6EK–24410–00	13 – 16
68V–24411–00	13 – 21
68V–24412–00	13 – 17
6EK–24413–00	13 – 23
6EK–24414–00	13 – 25
63P–24423–00	13 – 20
68V–24444–00	13 – 26
6EK–24452–00	10 – 13
4SV–24453–00	10 – 29
68V–24454–00	13 – 18
6D8–24469–00	13 – 9
68V–24471–10	13 – 24
6EK–24478–00	10 – 3
6EK–24481–00	10 – 4

PART NO.	REF. NO.
6CB–24482–00	10 – 15
6EK–2450B–01	11 – 1
6D8–24519–00	13 – 10
6EK–24560–00	13 – 5
6D8–24562–00	13 – 8
6D8–24563–00	1 – 12
	13 – 6
6D8–24564–00	1 – 13
	13 – 7
6EK–24566–00	13 – 12
6EK–24568–00	13 – 13
67F–28100–03	13 – 31
6CB–2812A–00	17 – 22
6EK–41114–00	12 – 14
	35 – 21
6EK–41124–00	12 – 15
	35 – 22
6EK–41134–00	29 – 9
	36 – 6
6EK–41137–01	29 – 1
6EK–41213–00	24 – 34
6EK–41237–00	24 – 45
6EK–41237–10	24 – 38
6EK–41635–00	24 – 39
6EK–41662–00	24 – 40
6EK–42154–00	24 – 30
6EK–42157–00	24 – 42
68V–42171–00	24 – 31
6BG–42384–00	23 – 3
6EK–42510–10–8D	26 – 6
6EK–42510–10–CE	26 – 6
6EK–42541–00	23 – 10
6EM–42542–00	12 – 18
6EK–42610–02	2 – 1
6EK–42610–31–CE	2 – 1
6EK–42615–01	2 – 14
6EK–42617–00	15 – 12
6EK–4261A–02	2 – 2
6EK–4261A–02–CE	2 – 2
6EK–42646–00	2 – 4
6EK–42647–00	2 – 5
6EK–42662–01	2 – 13
68F–42663–01	2 – 12
6EK–42675–00	2 – 18
6EK–42675–10	2 – 18
6EK–42676–00	2 – 20
6EK–42676–10	2 – 20
6EK–42677–00	2 – 16

PART NO.	REF. NO.
68V–42677–30	2 – 16
6EK–42678–00	2 – 17
68V–42678–41	2 – 17
6D6–42681–00	2 – 19
6EK–42681–00	2 – 19
6DA–42697–00	2 – 15
6EK–42710–01	22 – 1
6EK–42710–01–CE	22 – 1
648–42715–00	24 – 26
6EK–42716–01	22 – 27
67F–42717–00	22 – 23
6EK–42725–10	22 – 17
6AH–42726–01	23 – 11
6H1–42726–31	23 – 1
6EK–42727–01	29 – 6
6EK–42728–01	22 – 16
6EK–42741–00–8D	23 – 18
6EK–42741–00–CE	23 – 18
6H4–42748–01	22 – 22
68F–42753–00	22 – 19
6CB–42761–00	22 – 20
6EK–42769–01	29 – 17
6EE–42794–40	22 – 28
6EE–42794–50	22 – 29
6EK–42815–01–8D	22 – 5
6EK–42815–01–CE	22 – 5
6EK–42816–01–8D	22 – 6
6EK–42816–01–CE	22 – 6
6CB–42818–00	22 – 11
6EK–43111–00–8D	25 – 1
6EK–43111–00–CE	25 – 1
6EK–43112–00–8D	25 – 2
6EK–43112–00–CE	25 – 2
6EK–43126–00	25 – 27
64E–43131–30	25 – 9
64E–43139–11	26 – 3
66T–43144–00	22 – 14
	25 – 21
6G5–43148–00	25 – 18
6EK–43181–00	25 – 15
6EK–43185–00	25 – 16
6EK–43311–10–8D	25 – 5
6EK–43311–10–CE	25 – 5
6EK–43800–04	27 – 1
6EK–43804–11	28 – 3
6EK–43805–01	28 – 2
6EK–4380F–00	28 – 6
6C5–4380G–00	27 – 33
6EK–4380K–04	27 – 29
6EK–4380P–00	27 – 10
6EK–4380R–00	27 – 7
6EK–43810–00	27 – 2
6EK–43811–00	27 – 9
6H1–43812–00	27 – 3
6C5–43816–00	27 – 32
6C6–43817–00	27 – 30
6EK–43818–00	25 – 31
6EK–4381B–00	27 – 20
6EK–43821–00	27 – 4
6EK–43829–00	27 – 26
6EK–4382E–00	27 – 39
6D8–4382L–00	27 – 62
6EK–43830–00	27 – 35
6EK–43831–00	27 – 63
6H1–43834–10	25 – 32
6D8–43841–00	27 – 55
6D8–43843–00	27 – 50
6D8–43844–00	27 – 48
6H1–43844–10	27 – 59
6EK–43845–00	27 – 66
69A–4384F–00	27 – 56
6H1–4384G–11	27 – 58
62X–4384H–00	27 – 22
	27 – 28
6D8–4384M–00	27 – 37
6D8–43851–00	27 – 45
6C6–43853–00	27 – 41
6C5–43854–00	27 – 52
6C5–43855–10	27 – 46
6EK–43856–00	27 – 49
6D8–43861–00	27 – 6
	27 – 8
6EK–43861–00	27 – 5
6H1–43862–00	27 – 11
	27 – 15
6EK–43862–01	28 – 12
6D8–43863–00	27 – 64
67F–43865–00	27 – 14
62X–4386K–00	28 – 7
6EK–43875–00	27 – 19
6H1–43875–00	27 – 65
63P–43879–10	28 – 8
6C6–4387G–00	27 – 42
6EK–43880–13	27 – 68
	28 – 1
6EK–43881–13	28 – 10
6EK–43882–00	28 – 11
6H1–43883–00	27 – 38
6EK–43892–00	28 – 4
6C5–43895–00	27 – 51
6EK–43899–00	27 – 21
69J–4389J–00	27 – 31
	27 – 36
6EK–44117–01	24 – 8
6EK–44118–00	24 – 22
6EK–44120–11	24 – 17
6EK–44121–00	24 – 15
63P–44122–00	24 – 12
6EK–44135–00	24 – 35
6L6–44150–02	31 – 19
61A–44311–01	31 – 25
6E5–44312–00	32 – 18
6E5–44315–A0	31 – 32
	36 – 15
	36 – 26
61A–44322–02	31 – 26
	36 – 21
6EK–44323–00	31 – 31
	36 – 25
6E5–44352–01	31 – 29
	36 – 24
6E5–44365–01	32 – 17
6EK–44365–01	32 – 3
6E5–44366–01	32 – 1
6EK–44379–00	32 – 4
6P2–44391–00	23 – 4
	23 – 13
6EK–44514–00	26 – 23
6EK–44526–00	26 – 26
6EK–44536–00	25 – 38
6EK–44551–00–8D	26 – 12
6EK–44551–00–CE	26 – 12
6EK–44553–00–8D	26 – 21
6EK–44553–00–CE	26 – 21
63P–44555–00	26 – 15
61A–44575–01	26 – 14
6EK–45111–10–8D	29 – 11
6EK–45111–10–CE	29 – 11
67F–45127–00	29 – 25
	36 – 8
6EK–45135–00	29 – 26
6C5–45155–01	29 – 18
6EK–45181–01	29 – 10
688–45214–02	32 – 10
688–45215–02	32 – 11
6H1–45251–03	1 – 14
	25 – 36
6EL–45300–13–8D	31 – 1
6EL–45300–13–CE	31 – 1
6E5–45301–07–8D	31 – 2
6E5–45301–07–CE	31 – 2
6EK–45318–00	29 – 27
6E5–45321–00	31 – 15
6E5–45331–00–9S	31 – 35
6L6–45332–00–CA	31 – 58
688–45341–10	31 – 9
6E5–45344–00	31 – 41
6L6–45371–00	1 – 18
	32 – 14
688–45375–00	32 – 9
663–45376–00	32 – 8
6E5–45378–00	31 – 12
688–45383–02	31 – 69
688–45384–02	31 – 70
6EK–45501–10	31 – 43
61A–45527–00	31 – 24
6E5–45536–00	31 – 11
61A–45538–00	31 – 21
6L6–45538–00	31 – 6
68V–45551–00	31 – 44
68W–45560–00	31 – 46
6E5–45567–01	31 – 7
6E5–45567–10	31 – 7
6E5–45567–20	31 – 7
6E5–45567–30	31 – 7
6E5–45567–40	31 – 7
6E5–45567–50	31 – 7
6E5–45567–60	31 – 7
68W–45570–10	31 – 60
6L6–45576–00	31 – 61
6L6–45577–00	31 – 67
6L6–45577–10	31 – 67
6L6–45577–20	31 – 67
6L6–45577–30	31 – 67
6L6–45577–40	31 – 67
6L6–45577–50	31 – 67
6L6–45577–60	31 – 67
6K1–45578–01	31 – 63
6K1–45578–10	31 – 63
6K1–45578–20	31 – 63
6K1–45578–30	31 – 63
6K1–45578–40	31 – 63
6K1–45578–50	31 – 63
6K1–45578–60	31 – 63
6E5–45587–01	31 – 38
6E5–45587–10	31 – 38
6E5–45587–20	31 – 38
6E5–45587–30	31 – 38
6E5–45587–40	31 – 38
6E5–45587–50	31 – 38
6E5–45587–60	31 – 38
68W–45611–01	31 – 49
68V–45631–02	31 – 56
6E5–45633–01	31 – 57
6E5–45634–02	31 – 50
63P–45987–00	32 – 19
688–45997–01	32 – 20
6E5–48344–00	24 – 6
	24 – 28
6EK–48531–01	24 – 1
6EK–48532–00	24 – 2
6EK–48538–00	24 – 4
6C5–81145–00	7 – 2
6H5–81315–00	33 – 1
6EK–8132G–00	15 – 17
6EK–81337–01	15 – 11
6EK–81410–00	15 – 3
6EM–81800–01	21 – 1
69J–81801–11	21 – 5
6CB–81807–00	21 – 8
6CB–81809–00	21 – 14
67F–81810–00	21 – 3
67F–81813–00	21 – 6
6CB–81820–00	21 – 7
67F–81821–00	21 – 11
6EK–81822–01	18 – 4
6EK–81823–00	18 – 6
6CB–81826–00	21 – 22
69J–81828–00	21 – 23
6C5–8182L–00	7 – 3
67F–81830–00	21 – 16
6CB–81832–00	21 – 9
6CB–81836–00	21 – 10
6C5–81839–00	21 – 19
67F–8183R–00	21 – 13
60V–8183T–00	21 – 17
69J–81840–11	21 – 4
67F–81841–00	21 – 12
6CB–81842–00	21 – 18
67F–81846–00	21 – 24
67F–81850–00	21 – 2
6C5–81869–00	21 – 21
67F–81891–00	21 – 15
6EK–81919–11	17 – 25
60V–81925–00	18 – 2
6EM–81941–00	21 – 20
6EK–81942–10	17 – 10
6EK–81948–01	16 – 4
63P–81950–00	17 – 1
6EK–81952–10	17 – 5
6EK–81960–10	19 – 12
6EK–81975–01	19 – 13
6EK–81980–01	20 – 3
6EE–81994–40	15 – 22
6EE–81994–50	15 – 23
6AH–81996–00	22 – 30
68V–82105–02	18 – 9
6P2–82113–00	17 – 23
682–82119–01	17 – 2
6D8–82148–00	25 – 24
6E5–82148–00	25 – 3
68V–82149–30	25 – 8
6FP–82151–01	17 – 18
6CB–82151–20	17 – 19
6CB–82151–30	17 – 20
6FP–82170–01	17 – 17
6EK–82181–00	28 – 5
6EK–82310–00	19 – 1
6EK–82310–10	19 – 2
6A0–82317–01	15 – 14
67F–82361–00	19 – 8
67F–82362–00	19 – 10
6EK–82370–00	19 – 3
6EK–82388–00	19 – 5
6EK–82398–00	12 – 20
68V–82504–00	20 – 13
6EK–8253C–00	16 – 2
6DA–82553–00	20 – 19
6EK–82553–11	20 – 22
69J–82563–01	20 – 14
6C5–8257V–00	16 – 8
68F–82582–00	18 – 3
6Y8–82582–11	20 – 2
69J–82587–01	20 – 15
6E5–82588–00	22 – 24
61A–82588–01	24 – 9
6EK–82590–11	20 – 1
68V–82594–00	22 – 26

PART NO.	REF. NO.
60V–8259F–01	24 – 27
63P–825E0–02	34 – 1
6E5–83558–00	23 – 16
6E5–83558–10	31 – 14
69J–83614–00	20 – 16
6EK–83626–02	15 – 20
67H–83672–02	26 – 1
68F–83688–10	7 – 7
68F–85119–00	16 – 7
	17 – 8
6FP–85544–00	17 – 21
689–85547–01	13 – 1
6EK–85548–00	16 – 10
6EK–85561–00	15 – 5
60V–85564–00	16 – 5
	17 – 6
6CB–85580–00	15 – 4
6CJ–85780–01	20 – 18
6CJ–85790–00	20 – 11
6C5–85885–00	7 – 4
6EK–8591A–21	16 – 1
6C5–86120–00	8 – 1
K1C–A3275–00	4 – 10
7BB–G3861–00	27 – 17
6EK–W0001–01	35 – 1
6EK–W0001–20	36 – 1
68V–W0078–01	1 – 19
	36 – 20
6EK–W009A–02–9S	5 – 1
6EK–W009B–13–9S	3 – 1
6EK–W1165–00	4 – 9
6EK–W4624–00	6 – 16
6EK–W8145–01	15 – 1
6EK–W9010–00	15 – 2
90101–12065	25 – 41
90101–12066	25 – 41
90105–06037	3 – 12
	5 – 24
90105–06039	2 – 6
90105–06151	3 – 34
	30 – 15
90105–06208	13 – 30
90105–06M07	5 – 18
90105–06M08	8 – 8
90105–06M14	18 – 10
90105–08170	3 – 8
90105–08186	7 – 6
90105–08220	12 – 17
90105–08247	12 – 16
90105–08248	18 – 8
90105–08M87	8 – 12
90105–10M00	32 – 15
90105–14007	26 – 25
90105–14013	26 – 18
90109–06286	3 – 22
90109–06288	24 – 33
	24 – 36
90109–06292	30 – 8
90109–06316	22 – 21
90109–06M81	22 – 25
	24 – 3
90109–06M86	20 – 17
	22 – 15
90109–08240	18 – 5
90111–05037	7 – 8
90111–08078	2 – 7
90119–06275	19 – 11
90119–06276	25 – 37
90119–06286	31 – 18
90119–06299	8 – 9
90119–06309	8 – 18
90119–07234	5 – 8
90119–07235	5 – 6
90119–08022	7 – 11
90119–08187	22 – 2
90119–08191	31 – 34
	36 – 28
90119–10007	29 – 13
90119–10050	6 – 14
90119–10054	25 – 35
90119–10057	3 – 7
90119–10058	26 – 22
90119–10071	32 – 7
90149–10072	5 – 23
90151–06M02	3 – 18
90152–05M07	32 – 12
90159–05059	26 – 4
	34 – 3
90159–06053	23 – 22
90159–06M28	23 – 20
90169–05M00	17 – 11
90170–16M01	31 – 45
90171–18M04	32 – 22
90176–14002	26 – 19
	26 – 28
90179–08003	18 – 1
90183–061A8	23 – 21
90185–05002	32 – 13
90185–22M11	25 – 12
90201–06M05	24 – 32
	24 – 37
90201–10060	25 – 34
90201–11008	24 – 20
90201–12426	25 – 43
90201–13M01	25 – 42
90201–156J2	22 – 8
90201–16M55	26 – 17
90201–186F1	5 – 5
	12 – 3
	35 – 17
90201–22M01	31 – 22
90201–26M00	31 – 48
90201–26M59	25 – 11
90201–38M60	26 – 8
90202–08M20	24 – 13
90202–32M19	26 – 16
90202–40M47	26 – 11
90206–15M18	22 – 9
90206–22M19	31 – 23
90249–06M19	25 – 20
90250–08M07	31 – 55
90280–04M05	31 – 30
	36 – 29
90282–04010	31 – 68
90338–08174	26 – 7
90340–08002	31 – 8
90340–14M06	5 – 9
	30 – 3
90340–18M09	5 – 4
	12 – 2
90383–20001	25 – 33
90386–06M12	24 – 16
90386–10001	24 – 19
	24 – 43
90386–10M16	25 – 17
90386–15M73	22 – 7
90386–18001	25 – 29
90386–18M35	25 – 28
90386–25M31	25 – 10
90386–38M32	26 – 10
90387–05004	34 – 4
90387–06119	15 – 13
90387–06176	16 – 6
	17 – 7
90387–06289	8 – 17
90387–06M43	23 – 24
90387–07046	2 – 3
90387–08M37	22 – 4
90387–08M45	2 – 10
90387–10094	2 – 8
90401–20007	3 – 31
90430–06M03	5 – 19
90430–08003	1 – 17
	31 – 10
	36 – 10
90430–08143	12 – 5
	29 – 3
	36 – 5
90430–14115	5 – 10
	20 – 12
	35 – 24
90430–14M09	1 – 16
	30 – 4
	36 – 2
90440–16002	32 – 2
90445–073F9	23 – 14
90445–07ME9	31 – 13
90464–06001	19 – 6
90464–07209	8 – 19
90464–07259	23 – 15
90464–07M41	19 – 9
90464–08004	17 – 15
90464–09129	12 – 22
90464–10M32	17 – 14
90464–10M57	9 – 13
90464–11012	9 – 7
90464–12006	9 – 4
90464–12009	11 – 6
90464–12010	9 – 26
90464–12012	11 – 8
90464–12183	12 – 23
	17 – 16
90464–12224	11 – 7
90464–13227	19 – 7
90464–13249	15 – 10
90464–16001	9 – 18
	20 – 8
	20 – 20
	20 – 23
90464–18004	20 – 5
	20 – 6
	20 – 24
90464–20258	22 – 18
90464–21002	7 – 32
90464–22005	20 – 7
90464–99004	7 – 20
90465–08M63	25 – 7
90465–11M10	3 – 27
	9 – 10
	9 – 12
	9 – 15
	9 – 17
	11 – 4
	12 – 19
	13 – 11
	13 – 29
	23 – 2
	23 – 12
	23 – 17
	25 – 14
	26 – 5
	32 – 16
	34 – 5
90465–11M52	17 – 13
90465–11M59	3 – 24
	30 – 19
90465–12M56	17 – 26
90465–13M18	20 – 21
	25 – 26
90465–13M76	17 – 12
90465–13M97	15 – 7
90467–120A7	11 – 5
90468–18008	24 – 7
	24 – 14
	24 – 29
90468–180A0	24 – 21
90480–06M19	7 – 31
	15 – 19
90480–10M23	8 – 16
90480–12314	5 – 31
	15 – 16
90480–13M24	23 – 23
90480–20M05	29 – 21
90480–22M15	22 – 3
90501–12082	24 – 25
90501–16M37	31 – 51
90501–200A2	29 – 20
90506–14M24	25 – 23
90506–22001	22 – 13
91312–06035	15 – 9
91318–03005	27 – 61
91318–03025	27 – 60
91318–05030	27 – 53
91318–05045	27 – 34
91380–06025	27 – 67
91490–40030	32 – 23
91609–16012	27 – 12
91690–30010	24 – 5
91690–30018	24 – 44
91690–30020	25 – 19
91690–50014	7 – 15
	12 – 13
91809–08006	5 – 7
92903–08100	18 – 12
92990–08600	2 – 9
92990–18200	32 – 21
92995–14600	26 – 20
	26 – 27
93101–28M16	31 – 36
	36 – 16
93101–30M17	31 – 65
	36 – 18
93102–38008	6 – 15
	35 – 10
93102–85008	4 – 4
	35 – 9
93106–09014	31 – 17
	36 – 12
93210–04N51	27 – 43
93210–064A5	27 – 44
93210–09165	24 – 18
	27 – 25
93210–13M63	3 – 16
	5 – 14
	12 – 10
	22 – 10
	29 – 31
	35 – 2
	35 – 7
	35 – 18
	36 – 9
93210–19MJ1	3 – 9
	30 – 16
	35 – 5
	35 – 14
93210–207A0	3 – 5
93210–24M79	5 – 35
	35 – 16

PART NO.	REF. NO.
93210–30682	13 – 28
	35 – 23
93210–33003	7 – 26
93210–37160	31 – 28
	36 – 14
	36 – 23
93210–37MH7	26 – 9
93210–55M14	31 – 40
	36 – 17
93210–58144	31 – 16
	36 – 11
93210–64001	12 – 11
	35 – 19
93210–68N50	27 – 27
93210–84001	12 – 12
	35 – 20
93210–86M38	31 – 27
	36 – 13
	36 – 22
93210–86M39	31 – 66
	36 – 19
93315–345W0	31 – 4
93315–425U7	31 – 47
93315–43061	31 – 64
93315–628U9	31 – 3
93317–330U2	31 – 37
93332–000V7	31 – 59
93341–360U8	31 – 5
93341–440U5	31 – 62
93341–930V2	31 – 39
93410–18M05	25 – 30
93410–37M04	26 – 13
93450–19052	4 – 14
93501–04M02	24 – 24
93501–08001	27 – 47
93503–16003	27 – 16
	31 – 54
93505–32038	27 – 13
	27 – 40
93507–32009	31 – 52
93511–32017	31 – 53
93604–26256	27 – 54
93605–10108	6 – 11
93606–12019	3 – 6
	4 – 3
	29 – 8
	29 – 16
	30 – 5

PART NO.	REF. NO.
93606–12019	31 – 33
	36 – 27
93606–19M23	3 – 3
93608–12M05	29 – 5
	32 – 5
93700–06002	25 – 6
94702–00437	1 – 8
	5 – 36
95333–08600	18 – 11
95380–06600	8 – 2
	23 – 19
95380–12600	25 – 44
95780–08300	2 – 11
95812–08030	18 – 7
95D75–06025	7 – 10
	7 – 21
95D75–06040	24 – 11
95D75–08040	5 – 20
95D75–08060	7 – 5
95D75–10060	26 – 24
95D95–06010	16 – 3
	25 – 40
95D95–06012	12 – 21
95D95–06016	7 – 30
	13 – 14
	15 – 18
	17 – 9
95D95–06025	29 – 24
95D95–06030	5 – 29
	15 – 8
	15 – 15
	24 – 23
	24 – 41
	29 – 7
95D95–08012	22 – 12
95D95–08020	5 – 33
97595–05516	15 – 6
97602–04316	28 – 9
97607–04208	5 – 27
97780–50620	17 – 24
97780–60520	23 – 6
97780–60620	16 – 9
	16 – 11
97880–06012	25 – 4
97980–05214	7 – 23
97985–04116	24 – 10
97985–04308	20 – 4
97985–06216	26 – 2

PART NO.	REF. NO.
97D95–06010	25 – 22
97D95–08014	12 – 4
	29 – 2
97E75–08535	29 – 12
97E75–10545	29 – 4
	29 – 14
	29 – 15
	30 – 2
97E95–06510	25 – 25
97E95–06516	20 – 9
	20 – 10
	34 – 2
97E95–06520	17 – 4
97E95–06525	19 – 4
97E95–06530	19 – 14
97E95–06610	17 – 3
97E95–06616	25 – 39
97E95–08520	25 – 13
97E95–08525	31 – 42
97E95–10545	32 – 6
98507–04008	10 – 30
98780–05025	12 – 7
98980–05025	3 – 14
	5 – 12
	29 – 29
99001–08600	31 – 20
99002–03600	27 – 57
99009–47500	27 – 24
99530–14016	5 – 22
99590–10114	8 – 11