YAMAHA

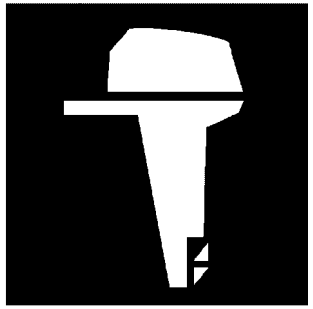

PARTS CATALOGUE
CATALOGUE DE PIECES DETACHEES

9.9FMH’23 (6MR1)
9.9GMH’23 (6MR2)
15FMH’23 (63WP)

YAMAHA GENUINE Parts & Accessories

1X6MR-300FA

( )

9.9FMH
9.9GMH/15FMH
PARTS CATALOGUE
©2023 by Yamaha Motor Co., Ltd.
1st edition, May 2023
All rights reserved.
Any reprinting or unauthorized use
without the written permission of
Yamaha Motor Co., Ltd.
is expressly prohibited.
Printed in Japan.

9.9FMH
9.9GMH/15FMH
CATALOGUE DE PIECES DETACHEES
©2023 par Yamaha Motor Co., Ltd.
1re édition, mai 2023
Tous droits réservés
Toute réimpression ou utilisation
non autorisée sans la permission écrite
de la Yamaha Motor Co., Ltd.
est formellement interdite.
Imprimé au Japon

FOREWORD

This Parts Catalogue is related to the parts for the model(s) on the cover page. When you are ordering replacement parts, please refer to this Parts Catalogue and quote both part numbers and part names correctly.

1. Modifications or additions which have been made after the issue of the Parts Catalogue will be announced in the Parts News.
   It is advisable that you make the necessary corrections to the Parts Catalogue according to the Parts News.

2. Abbreviations
   The following abbreviations are used in this Parts Catalogue.
   "UR" Use specified parts number.
   "UN" Use as many as needed.
   "AP" Alternate Parts
   "LM" Locally Made (Parts need to be ordered locally)
   "F#" Frame No. (Applicable machine No.)
   "O/S" Over Size

3. The number of components for assembly
   - Parts, which are to be supplied in an assembly, are listed with a dot (.) in front of the part name as shown below.
   - The numeral appearing to the right of each component part indicates the quantity of parts for each assembly unit.

PART NO.	DESCRIPTION	Q'TY	REMARKS
2F5–83310–60	FRONT FLASHER LIGHT ASSY	2	
115–83311–60	.BULB (6V–18W)	1	

4. Applicable colours of graphics are represented in the "REMARKS" as shown below.

PART NO.	DESCRIPTION	Q'TY	REMARKS
2N4–24110–00–X5	FUEL TANK COMP.	2	MXR
3J1–24240–10	.GRAPHIC, FUEL TANK	1	FOR MXR

5. Note that the illustrations for reference in finding parts numbers are not to be used for assembling. When assembling, please use the applicable service manual.

6. The asterisk (*) before a reference number indicates modified items after the first edition.

7. Applicable Serial No.
   Engine Serial No.

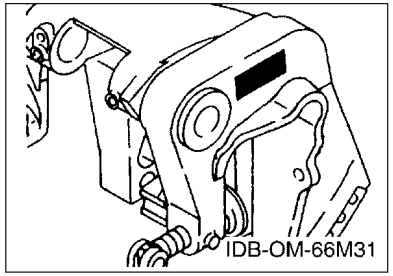

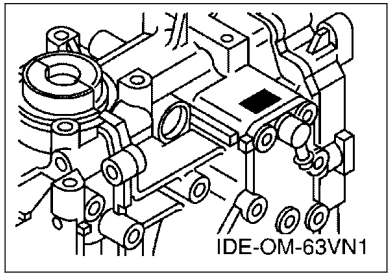

8. Applicable Engine Starting Serial No.

Model	Serial No.	Model	Serial No.
9.9F	682K-1063724	9.9G	63VK-1045314
15F	684K-1193084		

9. Applicable Colour Code

Abbreviation	Colour Name	Colour Code
DBN1	DARK BLUISH GRAY 1	008D

10. Quantity Column Information

Column No.	Name Of Q'ty Column	Applicable Model
1	6MR1	9.9FMH
2	6MR2	9.9GMH
3	63WP	15FMH

AVANT–PROPOS

Ce catalogue de pièces détachées concerne les pièces pour le(s) modèle(s) indiqué(s) sur la page de couverture. Lorsque vous commandez des pièces de rechange, veuillez vous référer à ce catalogue de pieces détachées et indiquer clairement les numéros et les noms des pièces détachées.

1. Les modifications ou ajouts ayant été effectués après la parution du catalogue de pièces détachées seront décrits dans les Bulletins d'information concernant les pièces détachées.
   Il est recommandé que vous apportiez les corrections nécessaires au catalogue des pièces détachées en vous référant aux Bulletins d'information.

2. Abréviations
   Dans ce catalogue, les abréviations suivantes sont utilisées:
   "UR" Utiliser le numéro de pièces spécifié.
   "UN" Utiliser autant que nécessaire.
   "AP" Pièces de substitution
   "LM" Fabrication locale (les pièces doivent être commandées localement.)
   "F#" N° de cadre (applicable au N° de série)
   "O/S" Surdimensionné

3. Nombre de pièces d'un assemblage
   - Les pièces fournies comme composants d'un assemblage sont précédées d'un point (.) de la manière indiquée ci–dessous.
   - Le chiffre apparaissant à la droite de chaque composant indique la quantité de pièces pour chaque unité d'assemblage.

N° PIECES	DESCRIPTION	QTE	REMARQUES
2F5–83310–60	ENS. CLIGNOTANT AVANT	2	
115–83311–60	.AMPOULE (6V–18W)	1	

4. Les couleurs concernant les graphiques sont indiquées dans la colonne "REMARQUES", comme indiqué ci–dessous.

N° PIECES	DESCRIPTION	QTE	REMARQUES
2N4–24110–00–X5	RESERVOIR A ESSENCE.	2	MXR
3J1–24240–10	.GRAPHIQUE	1	POUR MXR

5. Veuillez noter que les illustrations sont indiquées à titre de référence pour trouver les numéros de pièces, non pour être utilisées lors de l'assemblage. Lors de l'assemblage, veuillez utiliser le manuel d'entretien adéquat.

6. L'astérisque (*) placé devant un numéro de référence indique des éléments qui ont été modifiés après la première édition.

7. N° de série applicable
   N° de Série du moteur

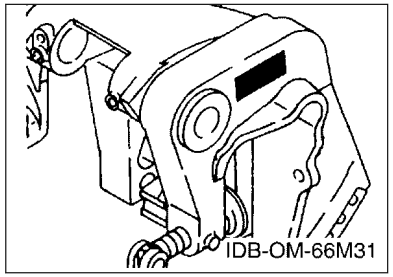

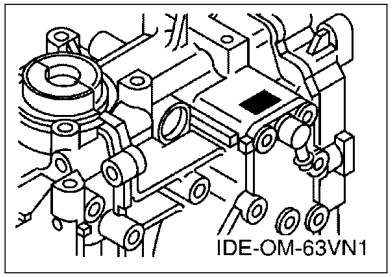

8. N° de série initial du moteur applicable

Modèle	N° de série	Modèle	N° de série
9.9F	682K-1063724	9.9G	63VK-1045314
15F	684K-1193084		

9. Code couleur applicable

Abréviation	Nom de la couleur	Code couleur
DBN1	DARK BLUISH GRAY 1	008D

10. Informations relatives à la colonne Quantité

N° de la colonne	Nom de la colonne Qté	Modèle applicable
1	6MR1	9.9FMH
2	6MR2	9.9GMH
3	63WP	15FMH

CONTENTS

SCHEDULED SERVICE PARTS.....1
TOP COWLING.....2
CYLINDER & CRANKCASE.....3
CRANKSHAFT & PISTON.....4
INTAKE.....6
CARBURETOR.....7
FUEL.....9
STARTER.....10
GENERATOR.....12
ELECTRICAL.....13
BOTTOM COWLING.....14
STEERING.....15
CONTROL.....17
REMO CON ATTACHMENT.....19
BRACKET 1.....20
BRACKET 2.....22
UPPER CASING.....23
LOWER CASING & DRIVE 1.....24
LOWER CASING & DRIVE 2.....27
FUEL TANK 1.....29
FUEL TANK 2.....30
OPTIONAL PARTS.....31
REPAIR KIT 1.....32
REPAIR KIT 2.....33

INDEX

NUMERICAL INDEX.....34

TABLE DES MATIERES

PIECES MAINTENANCE PERIODIQUE.....1
CAPOT SUPERIEUR..... 2
CYLINDRE & CARTER..... 3
VILEBREQUIN & PISTON.....4
ADMISSION.....6
CARBURATEUR..... 7
CARBURANT..... 9
DEMARREUR.....10
GENERATRICE.....12
ELECTRIQUE.....13
CAPOT INFERIEUR.....14
DIRECTION.....15
COMMANDE..... 17
COMMANDE A DISTANCE.....19
SUPPORT 1..... 20
SUPPORT 2..... 22
FOURREAU.....23
BOITIER D'HELICE TRANSMISSION1.....24
BOITIER D'HELICE TRANSMISSION2.....27
RESERVOIR A CARBURANT 1.....29
RESERVOIR A CARBURANT 2.....30
PIECES OPTIONNELLES.....31
KITS DE REPARATION 1..... 32
KITS DE REPARATION 2..... 33

INDEX

INDEX NUMERIQUE.....34

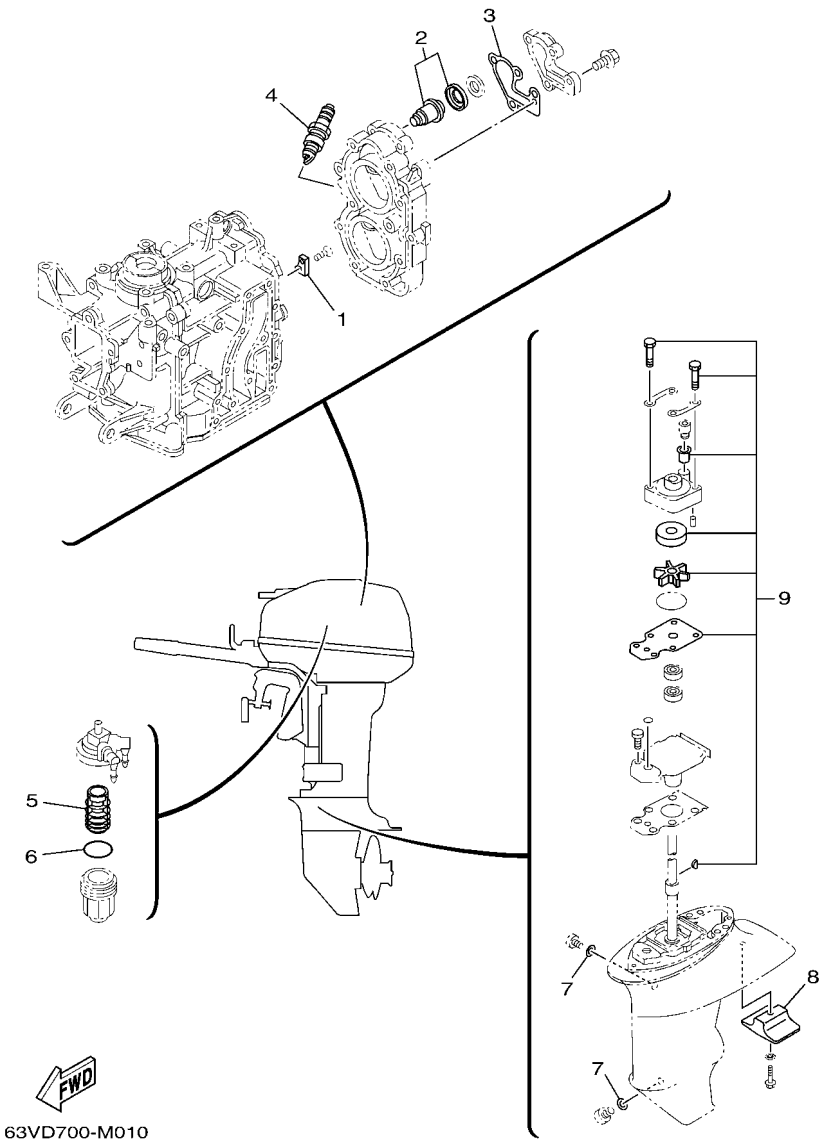

FIG. 1 SCHEDULED SERVICE PARTS — PIECES MAINTENANCE PERIODIQUE

REF. NO.	PART NO. N° PIECES	DESCRIPTION DESCRIPTION	6MR1	6MR2	63WP			REMARKS REMARQUES
1	682–11325–00	ANODE ANODE	1	1	1			
2	6E5–12411–30	THERMOSTAT THERMOSTAT	1	1	1			
3	682–12414–A1	GASKET, COVER JOINT, COUVERCLE	1	1	1			
4	94702–00217	PLUG, SPARK (NGK B7HS-10) BOUGIE D'ALLUMAGE(NGK B7HS-10)	2	2	2			UR UR
	94702–00271	PLUG, SPARK (NGK BR7HS-10) BOUGIE D'ALLUMAGE(NGK BR7HS-10	2	2	2			UR UR
5	61N–24563–00	ELEMENT, FILTER ELEMENT, FILTRE	1	1	1			
6	93210–32738	O-RING JOINT TORIQUE	1	1	1			
7	90430–08003	GASKET JOINT	2	2	2			
8	61N–45251–01	ANODE ANODE	1	1	1			
9	63V–W0078–04	WATER PUMP REPAIR KIT KIT DE REPARATION DE LA POMPE	1	1	1			

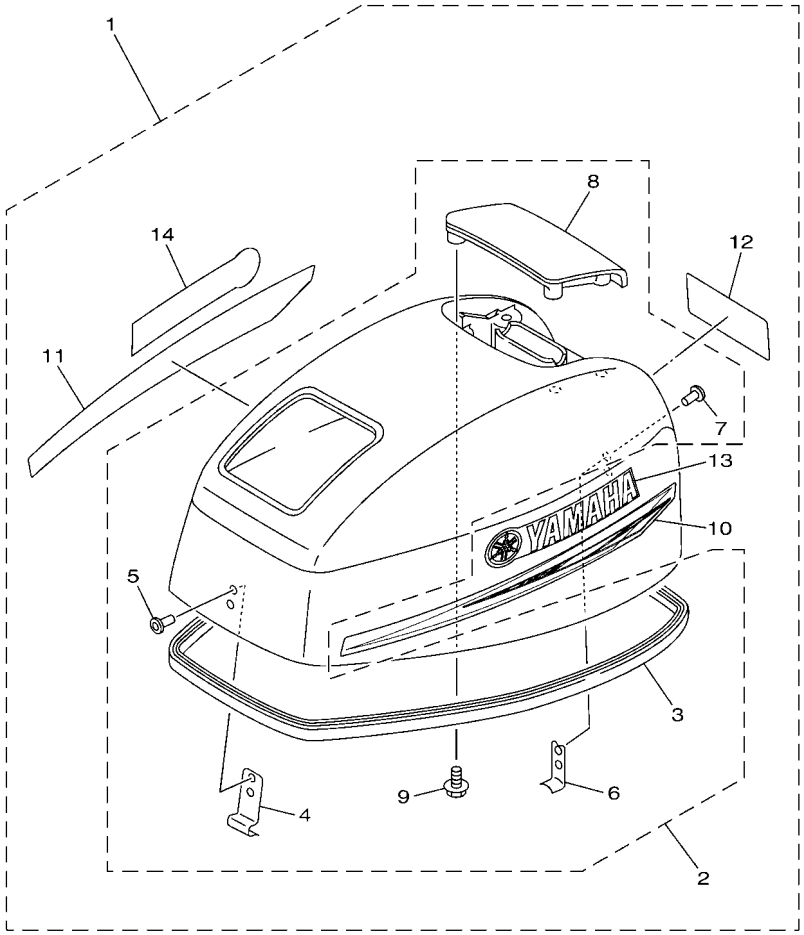

63VL300-R020

FIG. 2 TOP COWLING — CAPOT SUPERIEUR

REF. NO.	PART NO. N° PIECES	DESCRIPTION DESCRIPTION	6MR1	6MR2	63WP			REMARKS REMARQUES
1	63V–42610–03	TOP COWLING ASSY CAPOT (ENS.)	1	1				
	63W–42610–03	TOP COWLING ASSY CAPOT (ENS.)			1			
2	63V–4261A–01	.TOP COWLING W/O GRAPHICS .CAPOT SUPERIEUR SANS GRAPHIQUE	1	1	1			
3	63V–42615–00	..SEAL ..JOINT	1	1	1			
4	6G1–42651–02	..HOOK ..CROCHET	1	1	1			
5	90266–04M04	..RIVET ..RIVET	2	2	2			
6	6L2–42647–00	..HOLDER, CLAMP BAND ..SUPPORT, SANDOW DE SERRAGE	1	1	1			
7	90266–04M04	..RIVET ..RIVET	2	2	2			
8	63V–42613–A0–8D	..MOLDING, AIR DUCT ..MANCHON A AIR	1	1	1			
9	97E95–06516	..BOLT, HEXAGON W/W DEEP RECESS ..VIS HEXAGONAL AVC RONDELLE	4	4	4			
10	63V–42675–41	.GRAPHIC, SIDE 1 .EMBLEME	1	1	1			
11	63V–42676–41	.GRAPHIC, SIDE 2 .EMBLEME	1	1	1			
12	63V–42678–41	.GRAPHIC, REAR .ADHESIF, ARRIERE	1	1				
	63W–42678–40	.GRAPHIC, REAR .ADHESIF, ARRIERE			1			
13	6E0–42681–41	.MARK, COWLING .ADHESIF, CAPOT	1	1	1			
14	6E0–42681–41	.MARK, COWLING .ADHESIF, CAPOT	1	1	1			

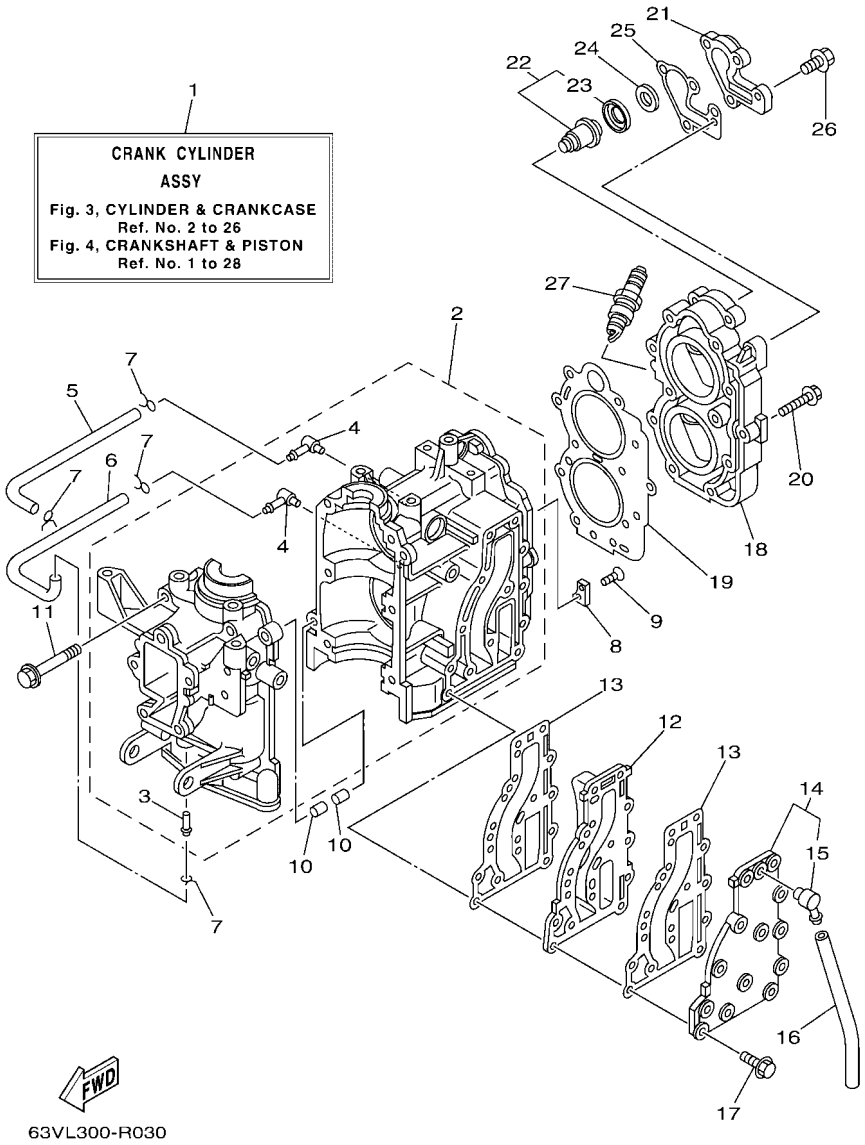

FIG. 3 CYLINDER & CRANKCASE — CYLINDRE & CARTER

REF. NO.	PART NO. N° PIECES	DESCRIPTION DESCRIPTION	6MR1	6MR2	63WP			REMARKS REMARQUES
1	63V–W0090–04–1S	CRANK CYLINDER ASSY EMBIELLAGE CYLINDRE (ENS.)	1	1	1			
2	63V–15100–03	CRANKCASE ASSY CARTER DE MOTEUR COMPLET	1	1	1			
3	624–14485–00	.PIPE, JOINT .DURITE	1	1	1			
4	650–14485–03	.PIPE, JOINT .DURITE	2	2	2			
5	90445–07M08	HOSE (L220) DURITE (L220)	1	1	1			
6	90445–07M08	HOSE (L220) DURITE (L220)	1	1	1			
7	90467–06016	CLIP JONC	4	4	4			
8	682–11325–00	ANODE ANODE	1	1	1			
9	98780–05015	SCREW, FLAT HEAD VIS A TETE FRAISEE	1	1	1			
10	93606–12019	PIN, DOWEL GOUPILLE	2	2	2			
11	90119–08M07	BOLT, WITH WASHER BOULON, AVEC RONDELLE	6	6	6			
12	63V–41111–00–1S	INNER COVER, EXHAUST PLAQUE, ECHAPPEMENT	1	1	1			
13	63V–41112–A0	GASKET, EXHAUST INNER COVER JOINT, PLAQUE D'ECHAPPEMENT	2	2	2			
14	63V–41113–00–1S	OUTER COVER, EXHAUST COUVERCLE, ECHAPPEMENT	1	1	1			
15	676–11372–00	.NIPPLE, HOSE .RACCORD, TUYAU	1	1	1			
16	90445–09104	HOSE (L300) DURITE (L300)	1	1	1			
17	90119–06MA4	BOLT, WITH WASHER BOULON, AVEC RONDELLE	13	13	13			
18	6E7–11111–01–1S	HEAD, CYLINDER 1 CULASSE, 1	1	1	1			
19	63V–11181–A2	GASKET, CYLINDER HEAD 1 JOINT, DE CULASSE 1	1	1	1			
20	90105–07M05	BOLT, FLANGE BOULON, A COLLERETTE	11	11	11			
21	682–12413–00–1S	COVER, THERMOSTAT COUVERCLE, THERMOSTAT	1	1	1			
22	6E5–12411–30	THERMOSTAT THERMOSTAT	1	1	1			
23	688–12412–00	.SEAL, THERMOSTAT .JOINT, THERMOSTAT	1	1	1			
24	90201–16M03	WASHER, PLATE RONDELLE, PLATE	1	1	1			
25	682–12414–A1	GASKET, COVER JOINT, COUVERCLE	1	1	1			
26	90119–06MA2	BOLT, WITH WASHER BOULON, AVEC RONDELLE	4	4	4			
27	94702–00271	PLUG, SPARK (NGK BR7HS-10) BOUGIE D'ALLUMAGE(NGK BR7HS-10	2	2	2			

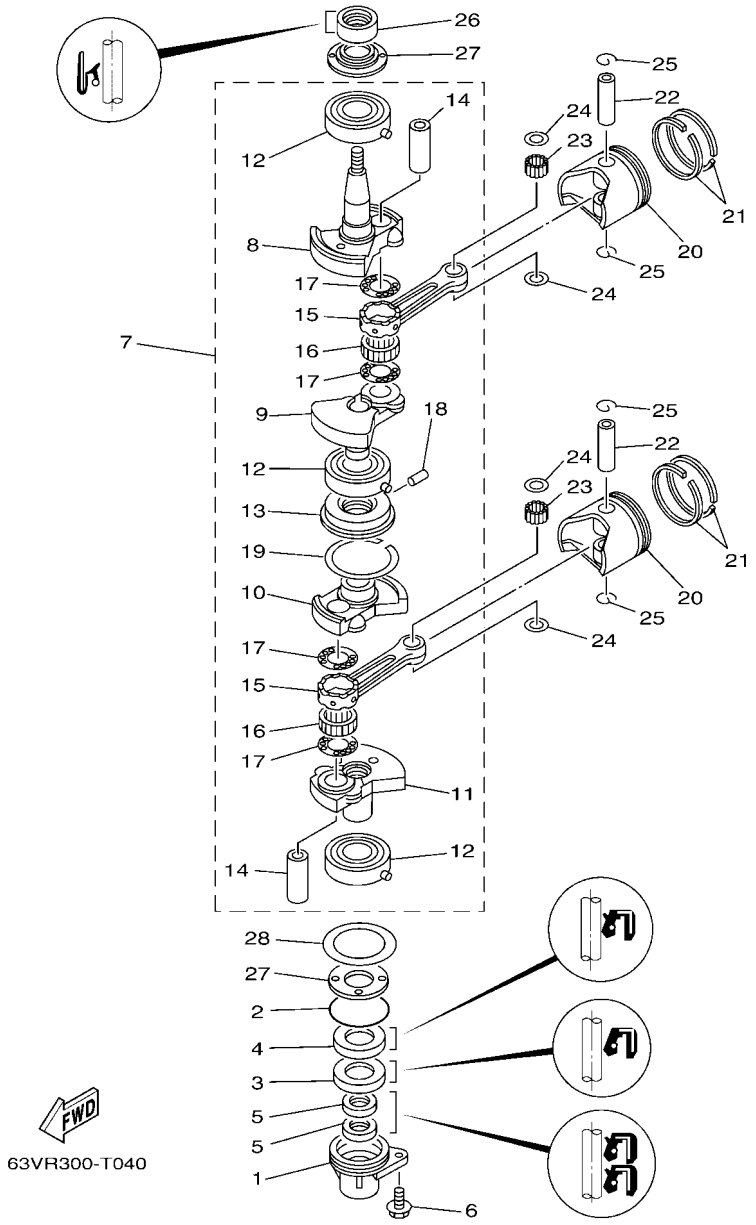

FIG. 4 CRANKSHAFT & PISTON — VILEBREQUIN & PISTON

REF. NO.	PART NO. N° PIECES	DESCRIPTION DESCRIPTION	6MR1	6MR2	63WP			REMARKS REMARQUES
1	63V–15396–01–CA	HOUSING, OIL SEAL LOGEMENT DE JOINT SPY	1	1	1			
2	93210–46M16	O-RING JOINT TORIQUE	1	1	1			
3	93101–25018	OIL SEAL JOINT SPY	1	1	1			
4	93102–25M48	OIL SEAL JOINT SPY	1	1	1			
5	93101–13018	OIL SEAL JOINT SPY	2	2	2			
6	97E95–06516	BOLT, HEXAGON W/W DEEP RECESS VIS HEXAGONAL AVC RONDELLE	1	1	1			
7	63V–11400–02	CRANKSHAFT ASSY VILEBREQUIN COMPLET	1	1	1			
8	63V–11412–01	.CRANK 1 .MASSOLOTTE DE VILEBREQUIN 1	1	1	1			
9	63V–11422–01	.CRANK 2 .MASSOLOTTE DE VILEBREQUIN 2	1	1	1			
10	63V–11432–01	.CRANK 3 .MASSOLOTTE DE VILEBREQUIN 3	1	1	1			
11	63V–11442–01	.CRANK 4 .MASSOLOTTE DE VILEBREQUIN 4	1	1	1			
12	93306–205U7	.BEARING .ROULEMENT	3	3	3			
13	63V–11515–02	.SEAL, LABYRINTH 1 .JOINT, LABYRINTHE 1	1	1	1			
14	682–11681–00	.PIN, CRANK 1 .MANETON, VILEBREQUIN 1	2	2	2			
15	6K4–11651–00	.ROD, CONNECTING .BIELLE NUE	2	2	2			
16	93310–620V5	.BEARING .ROULEMENT	2	2	2			
17	90209–20M23	.WASHER .RONDELLE	4	4	4			
18	91609–20008	.PIN, SPRING .AXE DE RESSORT	1	1	1			
19	93440–52009	.CIRCLIP .CIRCLIP	1	1	1			
20	6E7–11631–00–97	PISTON (STD) PISTON (STD)	2	2	2			
	6E7–11635–00	PISTON (0.25MM O/S) PISTON (0.25MM O/S)	2	2	2			AP AP
	6E7–11636–00	PISTON (0.50MM O/S) PISTON (0.50MM O/S)	2	2	2			AP AP
21	682–11610–01	PISTON RING SET (STD) JEU DE SEGMENTS (STD)	2	2	2			
	682–11610–11	PISTON RING SET (0.25MM O/S) JEU DE SEGMENTS (0.25MM O/S)	2	2	2			AP AP
	682–11610–21	PISTON RING SET (0.50MM O/S) JEU DE SEGMENTS (0.50MM O/S)	2	2	2			AP AP
22	634–11633–00	PIN, PISTON AXE, PISTON	2	2	2			
23	93602–14104	PIN, DOWEL GOUJON	50	50	50			

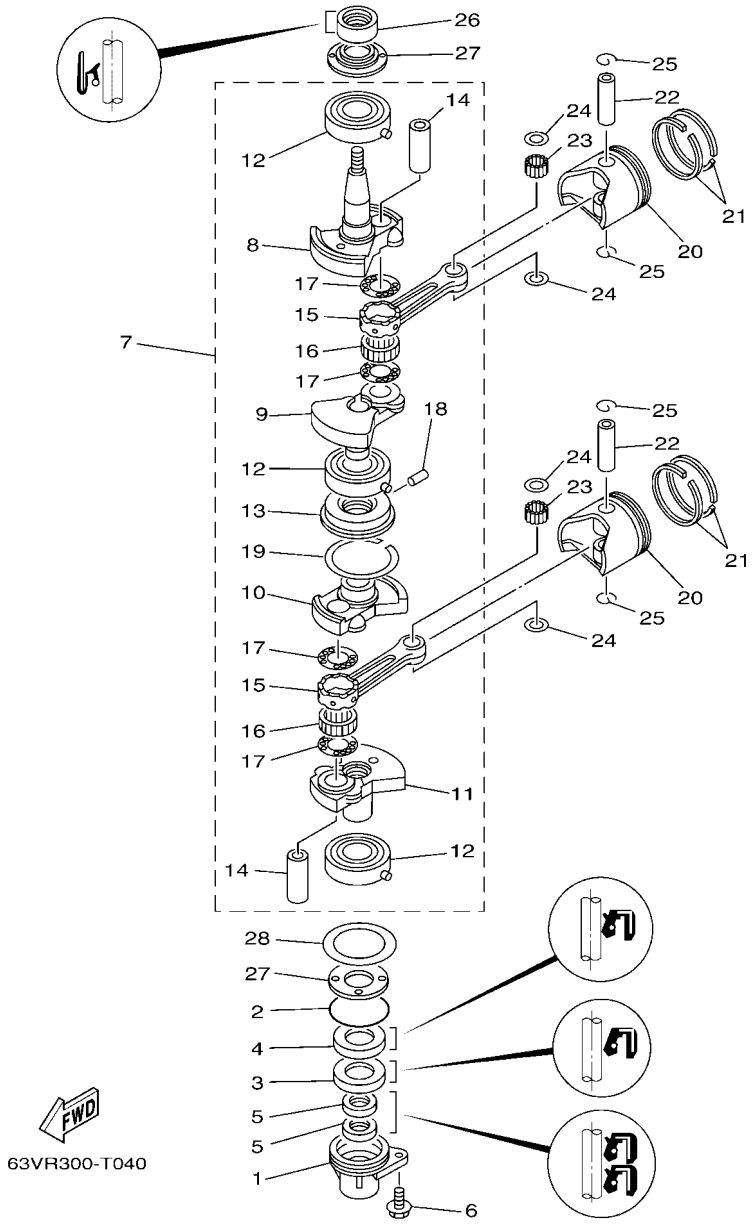

FIG. 4 CRANKSHAFT & PISTON — VILEBREQUIN & PISTON

REF. NO.	PART NO. N° PIECES	DESCRIPTION DESCRIPTION	6MR1	6MR2	63WP			REMARKS REMARQUES
24	90201–14377	WASHER, PLATE RONDELLE, PLATE	4	4	4			
25	93450–15023	CIRCLIP CIRCLIP	4	4	4			
26	93110–23M00	OIL SEAL JOINT SPY	1	1	1			
27	63V–11445–00	SPACER ENTRETOISE	2	2	2			
28	90201–46M29	WASHER, PLATE RONDELLE, PLATE	1	1	1			

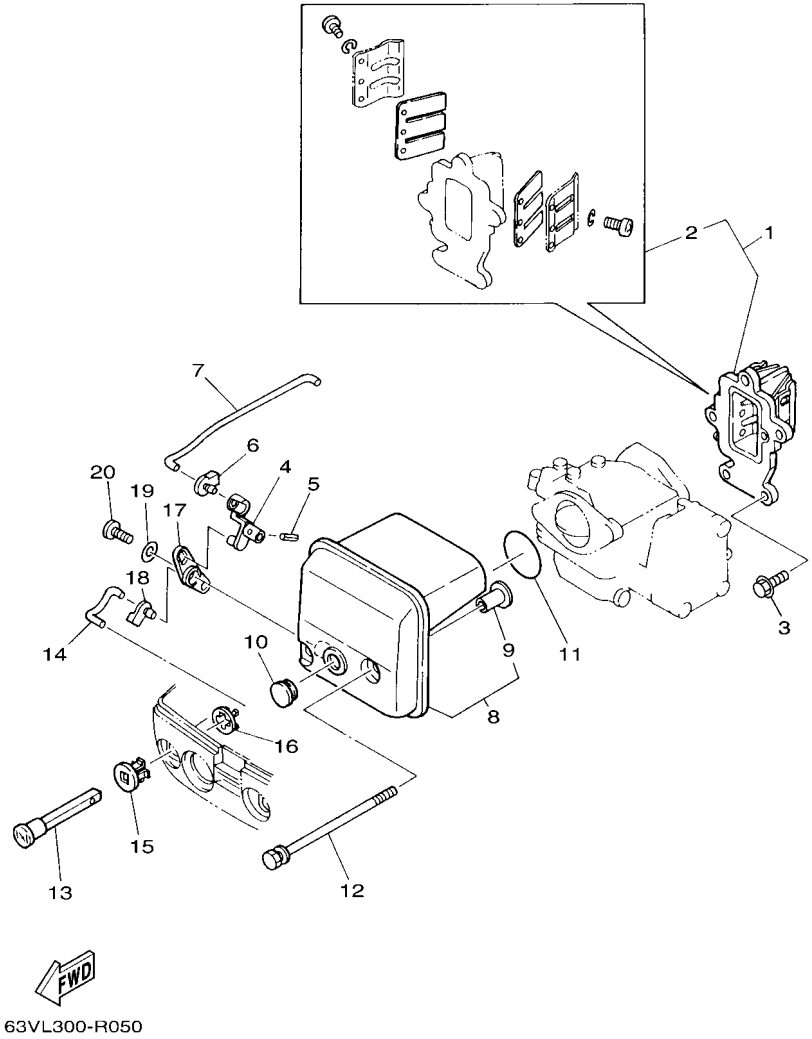

FIG. 5 INTAKE — ADMISSION

REF. NO.	PART NO. N° PIECES	DESCRIPTION DESCRIPTION	6MR1	6MR2	63WP			REMARKS REMARQUES
1	63V–13610–10	REED VALVE ASSY CLAPET COMPLET	1					
	63W–13610–00	REED VALVE ASSY CLAPET COMPLET		1	1			
2	682–W0004–00	.REED SET .JEU DE CLAPETS	1	1	1			
3	97E95–06520	BOLT, HEXAGON W/W DEEP RECESS VIS HEXAGONAL AVC RONDELLE	3	3	3			
4	63V–41253–00	LEVER, CHOKE LEVIER	1	1	1			
5	91690–20010	PIN, SPRING AGRAFFE	1	1	1			
6	63V–41262–00	JOINT, CHOKE LEVER RACCORD, LEVIER DE STARTER	1	1	1			
7	63V–41257–00	ROD, CHOKE 2 TRINGLE 2, STARTER	1	1	1			
8	63V–14440–A0	SILENCER ASSY, INTAKE SIENCIEUX D'ADMISSION	1	1	1			
9	90387–06M15	.COLLAR .COLLERETTE	2	2	2			
10	90480–12M25	GROMMET PASSE-FIL	1	1	1			
11	93210–35M86	O-RING JOINT TORIQUE	1	1	1			
12	90119–06308	BOLT, WITH WASHER BOULON, AVEC RONDELLE	2	2	2			
13	6H4–41271–02	KNOB, CHOKE BOUTON DE STARTER	1	1	1			
14	63V–41256–00	ROD, CHOKE 1 TRINGLE 1, STARTER	1	1	1			
15	689–41273–00	GROMMET PASSE-FIL	1	1	1			
16	6J8–41274–01	GROMMET 2 PASSE-FIL 2	1	1	1			
17	63V–41252–00	LEVER, CHOKE 1 LEVIER 1	1	1	1			
18	661–41262–02	JOINT, CHOKE LEVER RACCORD, LEVIER DE STARTER	1	1	1			
19	90201–05M09	WASHER, PLATE RONDELLE, PLATE	1	1	1			
20	90164–05M03	SCREW, TAPPING VIS, TETE FRAISEE	1	1	1			

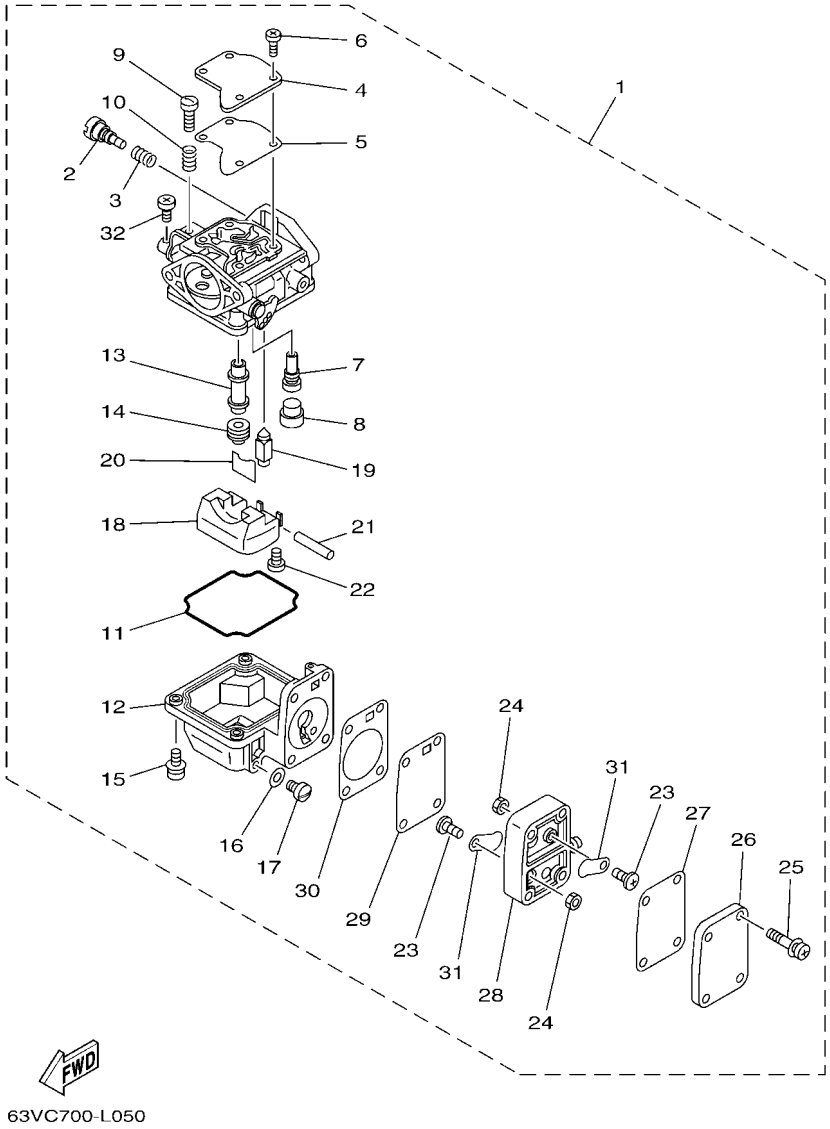

FIG. 6 CARBURETOR — CARBURATEUR

REF. NO.	PART NO. N° PIECES	DESCRIPTION DESCRIPTION	6MR1	6MR2	63WP			REMARKS REMARQUES
1	63V–14301–03	CARBURETOR ASSY 1 CARBURATEUR COMPLET 1	1	1	1			
2	679–14923–01	.SCREW, PILOT .VIS, RALENTI	1	1	1			
3	697–14555–00	.SPRING .RESSORT	1	1	1			
4	63V–14527–00	.PLATE .PLAQUE	1	1	1			
5	63V–14126–00	.GASKET .JOINT	1	1	1			
6	65L–14565–00	.SCREW .VIS	4	4	4			
7	6G1–14948–06	.JET (#48) .GICLEUR (#48)	1	1	1			
8	679–14966–00	.RUBBER CAP .CAPUCHON	1	1	1			
9	63V–14523–00	.SCREW, STOP .VIS, BUTEE	1	1	1			
10	90501–10326	.SPRING, COMPRESSION .RESSORT, COMPRESSION	1	1	1			
11	63V–14984–00	.GASKET, FLOAT CHAMBER .JOINT, CUVE DE FLOTTEUR	1	1	1			
12	63V–14980–02	.BODY, FLOAT CHAMBER .CORPS, CUVE DE FLOTTEUR	1	1	1			
13	63V–14947–00	.JET, NEEDLE .GICLEUR DE STARTER	1	1	1			
14	676–14943–29	.JET, MAIN (#110) .GICLEUR, PRINCIPAL (#110)	1	1	1			
15	97980–04114	.SCREW, WITH WASHER .VIS, AVEC RONDELLE	4	4	4			
16	65W–14398–00	.GASKET .JOINT	1	1	1			
17	65W–14992–09	.SCREW, DRAIN .BOUCHON, PURGE	1	1	1			
18	63V–14985–00	.FLOAT .FLOTTEUR	1	1	1			
19	6AH–14546–00	.VALVE, NEEDLE .POINTEAU	1	1	1			
20	633–14159–00	.CLIP .JONC	1	1	1			
21	6H4–14548–00	.PIN, FLOAT ARM .AXE, BRAS DE FLOTTEUR	1	1	1			
22	98580–04008	.SCREW, PAN HEAD .VIS	1	1	1			
23	98980–03006	.SCREW, BIND .VIS, DE PRESSION	2	2	2			
24	95380–03600	.NUT .ECROU	2	2	2			
25	97980–04123	.SCREW, WITH WASHER .VIS, AVEC RONDELLE	4	4	4			
26	6G1–24452–00	.COVER .COUVERCLE	1	1	1			
27	63V–24411–00	.DIAPHRAGM .DIAPHRAGME	1	1	1			

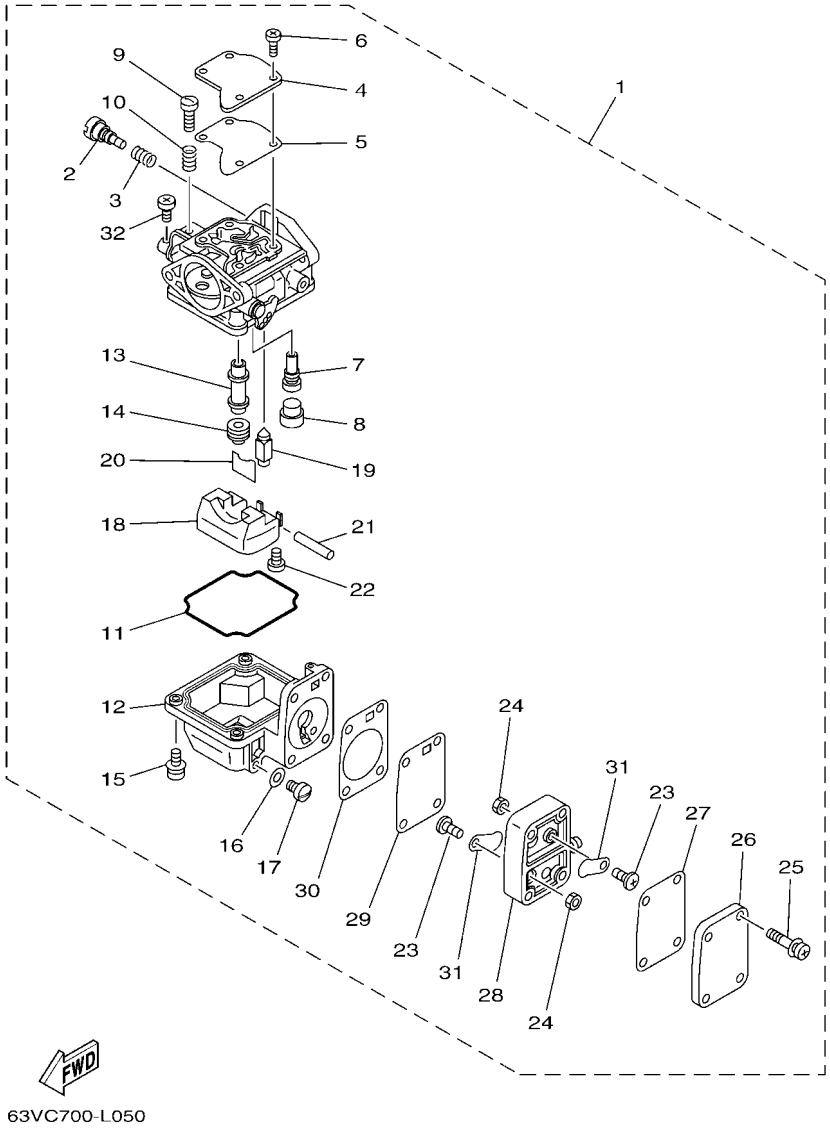

FIG. 6 CARBURETOR — CARBURATEUR

REF. NO.	PART NO. N° PIECES	DESCRIPTION DESCRIPTION	6MR1	6MR2	63WP			REMARKS REMARQUES
28	6G1–24412–01	.BODY 1 .CORPS 1	1	1	1			
29	6G1–24411–00	.DIAPHRAGM .DIAPHRAGME	1	1	1			
30	6G1–24431–01	.GASKET, FUEL PUMP 1 .JOINT 1 DE POMPE A ESSENCE	1	1	1			
31	6L5–24421–00	.VALVE, CHECK .SOUPAPE, RETENUE	2	2	2			
32	98580–04006	.SCREW, PAN HEAD .VIS	1	1	1			

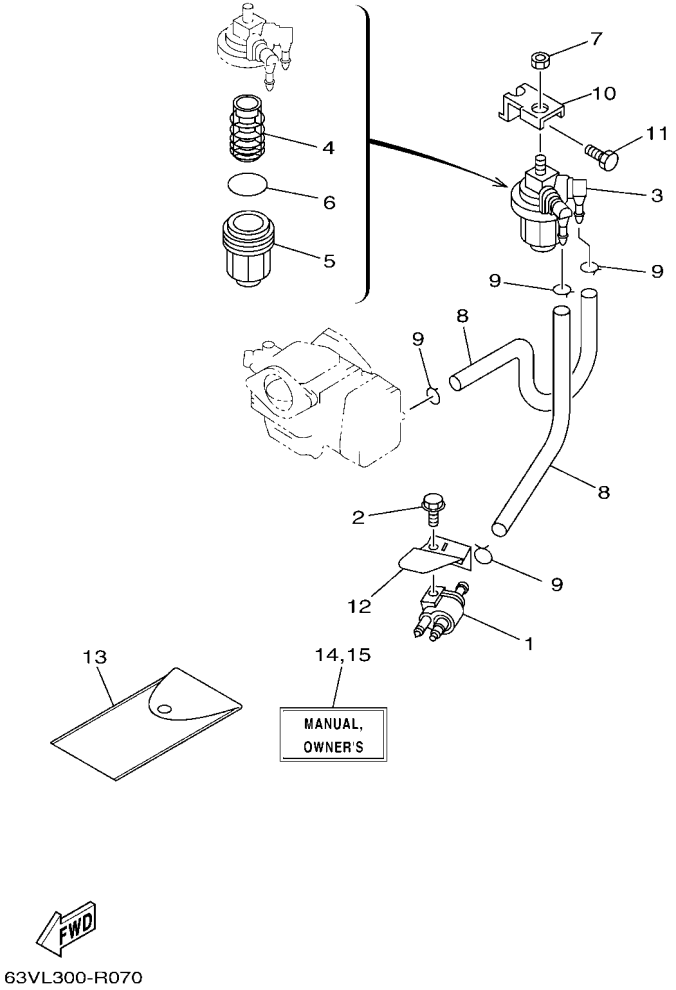

FIG. 7 FUEL — CARBURANT

REF. NO.	PART NO. N° PIECES	DESCRIPTION DESCRIPTION	6MR1	6MR2	63WP			REMARKS REMARQUES
1	6G1–24304–10	FUEL PIPE JOINT COMP. 1 DURITE RACCORDEMT. A ESSENCE	1	1	1			
2	97E95–06520	BOLT, HEXAGON W/W DEEP RECESS VIS HEXAGONAL AVC RONDELLE	1	1	1			
3	61N–24560–00	FILTER ASSY ENS FILTRE	1	1	1			
4	61N–24563–00	.ELEMENT, FILTER .ELEMENT, FILTRE	1	1	1			
5	61N–24521–00	.CUP, FILTER .CUVETTE, FILTRE	1	1	1			
6	93210–32738	.O-RING .JOINT TORIQUE	1	1	1			
7	95380–08600	NUT ECROU	1	1	1			
8	90445–09M00	HOSE (L180) DURITE (L180)	2	2	2			
9	90467–08004	CLIP JONC	4	4	4			
10	682–24566–01	BRACKET, FILTER SUPPORT, FILTRE	1	1	1			
11	97013–06010	BOLT BOULON	1	1	1			
12	63V–24396–01	PLATE PLAQUE	1	1	1			
13	656–W2810–03	TOOL KIT TROUSSE A OUTILS	1	1	1			AP AP
14	63V–28199–7M–E0	MANUAL,OWNER'S MANUEL D'UTILISATION	1		1			UR (E) UR (E)
	63V–28199–7M–F0	MANUAL,OWNER'S MANUEL D'UTILISATION	1		1			UR (F) UR (F)
	63V–28199–7M–S0	MANUAL,OWNER'S MANUEL D'UTILISATION	1		1			UR (ES) UR (ES)
	63V–28199–7M–G0	MANUAL,OWNER'S MANUEL D'UTILISATION	1		1			UR (D) UR (D)
	63V–28199–7M–D0	MANUAL,OWNER'S MANUEL D'UTILISATION	1		1			UR (NL) UR (NL)
	63V–28199–7M–H0	MANUAL,OWNER'S MANUEL D'UTILISATION	1		1			UR (I) UR (I)
15	63V–28199–8N–K0	MANUAL,OWNER'S MANUEL D'UTILISATION	1		1			UR (DK) UR (DK)
	63V–28199–8N–R0	MANUAL,OWNER'S MANUEL D'UTILISATION	1		1			UR (GR) UR (GR)
	63V–28199–8N–P0	MANUAL,OWNER'S MANUEL D'UTILISATION	1		1			UR (P) UR (P)
	63V–28199–8N–N0	MANUAL,OWNER'S MANUEL D'UTILISATION	1		1			UR (N) UR (N)
	63V–28199–8N–M0	MANUAL,OWNER'S MANUEL D'UTILISATION	1		1			UR (S) UR (S)
	63V–28199–8N–L0	MANUAL,OWNER'S MANUEL D'UTILISATION	1		1			UR (SF) UR (SF)

FIG. 8 STARTER DEMARREUR

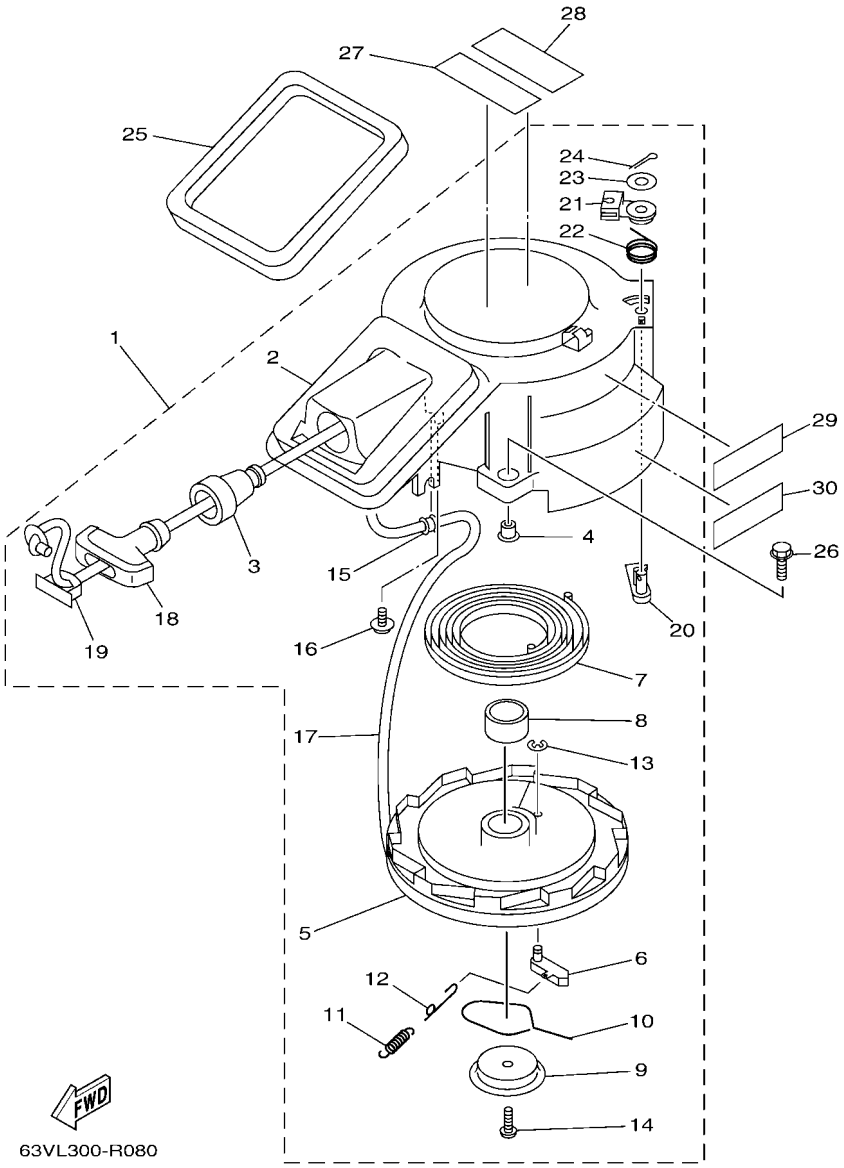

*1:CUT FROM 50M ROLLS,PART NO.90890-44373,CUTTING LENGTH 1.8M

*1:A PRELEVER SUR BOBINE 50M ,REFERENCE 90890-44373,
LONGUEUR DE COUPE 1.8M

REF. NO.	PART NO. N° PIECES	DESCRIPTION DESCRIPTION	6MR1	6MR2	63WP			REMARKS REMARQUES
1	63V–15710–21	STARTER ASSY DEMARREUR COMPLET	1	1	1			WITH SAFETY DEVICE WITH SAFETY DEVICE
2	63V–15711–10	.CASE, STARTER .CARTER DE DEMARREUR	1	1	1			
3	63V–15795–01	.GUIDE, ROPE .GUIDE DE CABLE	1	1	1			
4	90387–06M05	.COLLAR .COLLERETTE	3	3	3			
5	63V–15714–00	.DRUM, SHEAVE .TAMBOUR, POULIE	1	1	1			
6	63V–15741–00	.PAWL, DRIVE .CLIQUET, ENTRAINEMENT	1	1	1			
7	63V–15713–00	.SPRING, STARTER .RESSORT DE DEMARREUR	1	1	1			
8	63V–15753–00	.BUSH .CHARBON	1	1	1			
9	63V–15716–10	.PLATE, DRIVE .PLAQUE, ENTRAINEMENT	1	1	1			
10	63V–15705–10	.SPRING, DRIVE PAWL .RESSORT DE CLIQUET	1	1	1			
11	63V–15767–01	.SPRING .RESSORT	1	1	1			
12	68T–15784–00	.SPRING, RETURN .RESSORT, RAPPEL	1	1	1			
13	63V–15744–00	.CIRCLIP .CIRCLIP	1	1	1			
14	68T–15793–00	.SCREW .VIS	1	1	1			
15	63V–15764–00	.COLLAR 1 .COLLERETTE 1	1	1	1			
16	63V–15793–00	.SCREW .VIS	1	1	1			
17	*	.WIRE, STARTER (L:1800MM) .CABLE DE DEMARREUR (L:1800MM)	1	1	1			*1 *1
18	6G1–15755–00	.HANDLE, STARTER .POIGNEE, DE DEMARREUR	1	1	1			
19	6G1–15779–00	.COVER .COUVERCLE	1	1	1			
20	63V–15794–00	.STOPPER .BUTEE	1	1	1			
21	63V–15748–00	.PLUNGER, STARTER STOP .PLONGEUR, BOUTE DE DEMAR	1	1	1			
22	63V–15734–00	.SPRING, RETURN .RESSORT, RAPPEL	1	1	1			
23	63V–15726–00	.WASHER, FLAT .RONDELLE, PLATE	1	1	1			
24	91490–16018	.PIN. COTTER .GOUPILLE	1	1	1			
25	63V–15762–00	SEAL, RUBBER 2 JOINT CAOUTCHOUC 2	1	1	1			
26	97E95–06520	BOLT, HEXAGON W/W DEEP RECESS VIS HEXAGONAL AVC RONDELLE	3	3	3			
27	6EE–81995–40	LABEL, WARNING ETIQUETTE, AVERTISSEMENT	1	1	1			

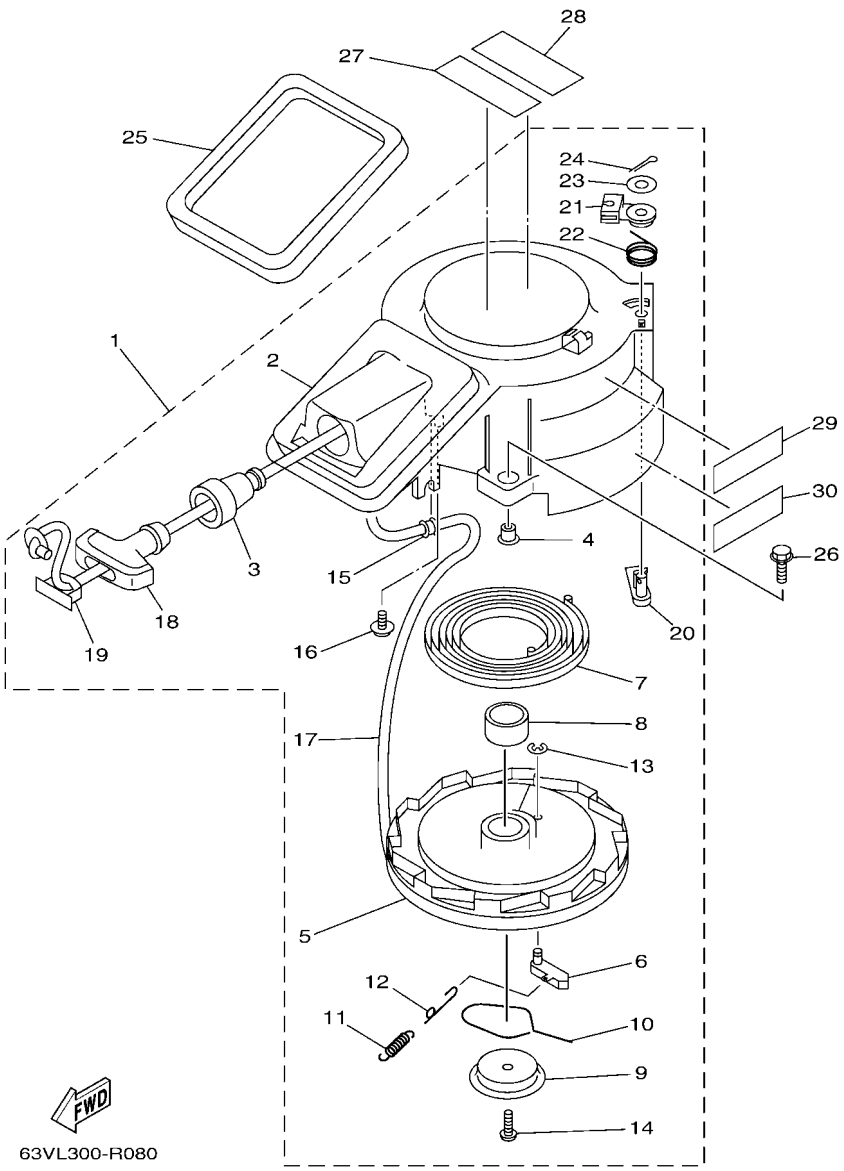

*1:CUT FROM 50M ROLLS,PART NO.90890-44373,CUTTING LENGTH 1.8M

*1:A PRELEVER SUR BOBINE 50M ,REFERENCE 90890-44373,
LONGUEUR DE COUPE 1.8M

FIG. 8 STARTER — DEMARREUR

REF. NO.	PART NO. N° PIECES	DESCRIPTION DESCRIPTION	6MR1	6MR2	63WP			REMARKS REMARQUES
28	6EE–81995–50	LABEL, WARNING ETIQUETTE, AVERTISSEMENT	1	1	1			
29	6EE–81994–40	LABEL, SAFETY ETIQUETTE, SECURITE	1	1	1			
30	6EE–81994–50	LABEL, SAFETY ETIQUETTE, SECURITE	1	1	1			

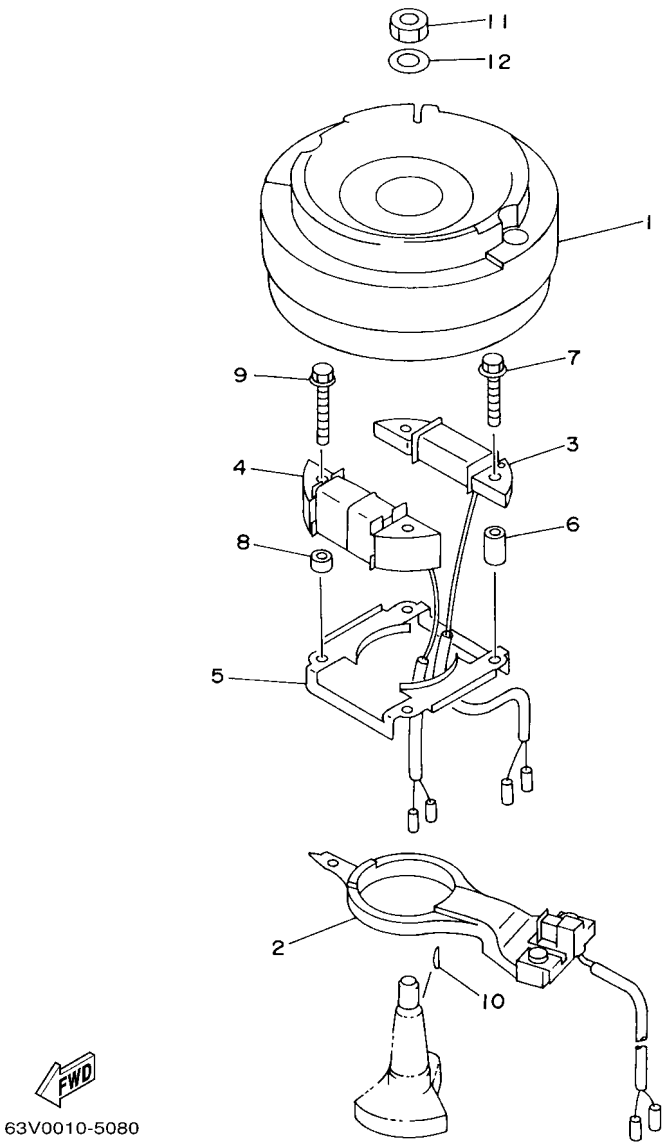

FIG. 9 GENERATOR — GENERATRICE

REF. NO.	PART NO. N° PIECES	DESCRIPTION DESCRIPTION	6MR1	6MR2	63WP			REMARKS REMARQUES
1	63V–85550–11	ROTOR ASSY ROTOR CPLT	1	1	1			
2	63V–85580–01	COIL, PULSER BOBINE, PULSEUR	1	1	1			
3	63V–85520–01	COIL, CHARGE BOBINE, CHARGE	1	1	1			
4	63V–85533–00	COIL, LIGHTING BOBINE, ECLAIRAGE	1	1	1			
5	63V–41611–00	RETAINER, MAGNETO BASE FLASQUE, PLATEAU D'AVANCE	1	1	1			
6	90387–06M53	COLLAR COLLERETTE	2	2	2			
7	90105–06M68	BOLT, FLANGE BOULON, A COLLERETTE	2	2	2			
8	90387–06M24	COLLAR COLLERETTE	2	2	2			
9	90105–06M69	BOLT, FLANGE BOULON, A COLLERETTE	2	2	2			
10	90280–05013	KEY, WOODRUFF CLAVETTE, DEMI-LUNE	1	1	1			
11	90170–12066	NUT ECROU	1	1	1			
12	90201–12472	WASHER, PLATE RONDELLE, PLATE	1	1	1			

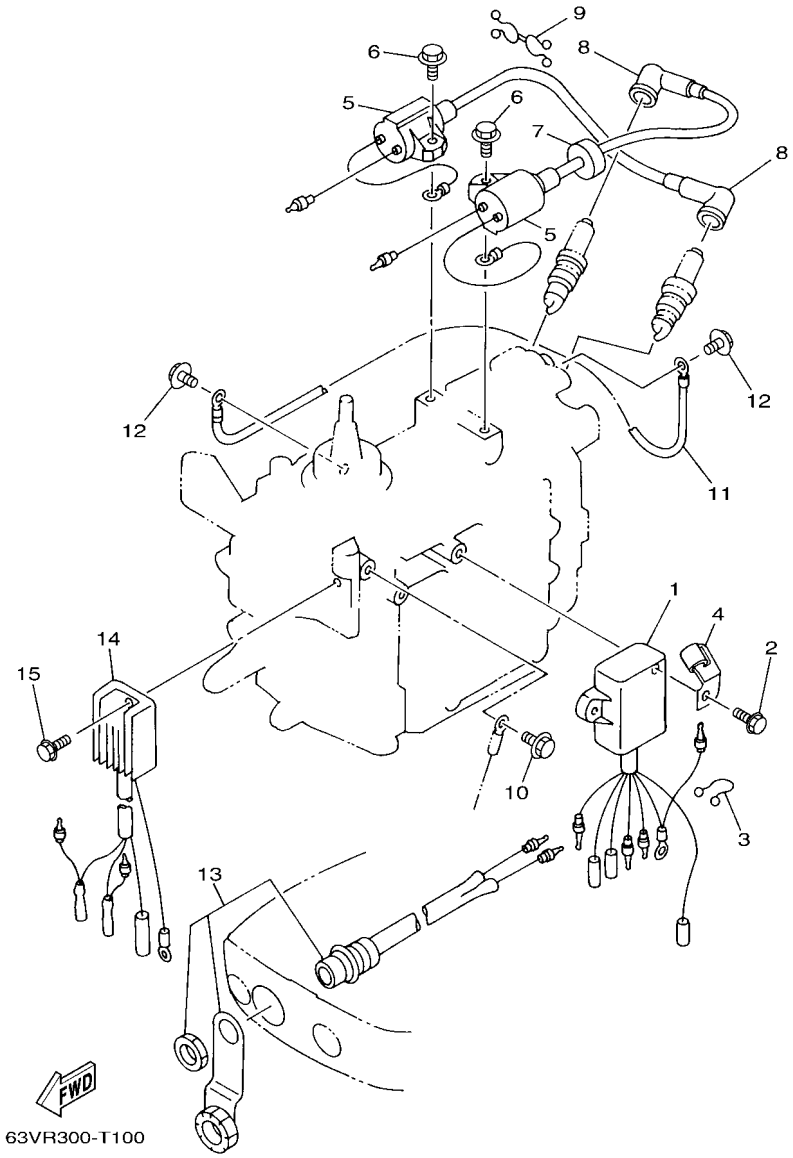

FIG. 10 ELECTRICAL ELECTRIQUE

REF. NO.	PART NO. N° PIECES	DESCRIPTION DESCRIPTION	6MR1	6MR2	63WP			REMARKS REMARQUES
1	63V–85540–03	C.D.I. UNIT ASSY BLOC C.D.I.	1	1	1			
2	97E95–06520	BOLT, HEXAGON W/W DEEP RECESS VIS HEXAGONAL AVC RONDELLE	2	2	2			
3	90464–15M11	CLAMP BRIDE	1	1	1			
4	90465–08M61	CLAMP BRIDE	1	1	1			
5	63V–85570–10	IGNITION COIL ASSY BOBINE D'ALLUMAGE (ENS.)	2	2	2			
6	97E95–06518	BOLT, HEXAGON W/W DEEP RECESS VIS HEXAGONAL AVC RONDELLE	2	2	2			
7	90480–25161	GROMMET PASSE-FIL	1	1	1			
8	6E3–82370–21	PLUG CAP ASSY ANTIPARASITE	2	2	2			
9	90464–08M02	CLAMP BRIDE	1	1	1			
10	97E95–06512	BOLT, HEXAGON W/W DEEP RECESS VIS HEXAGONAL AVC RONDELLE	1	1	1			
11	662–82519–00	WIRE, EARTH LEAD FIL, MASSE	1	1	1			
12	97E95–06512	BOLT, HEXAGON W/W DEEP RECESS VIS HEXAGONAL AVC RONDELLE	2	2	2			
13	682–84381–00	2P CONCENT RALLONGE 2 FILS	1	1	1			
14	6J8–81960–00	RECTIFIER & REGULATOR ASSY REDRESSEUR REGULATEUR CPLT	1	1	1			
15	97E95–06516	BOLT, HEXAGON W/W DEEP RECESS VIS HEXAGONAL AVC RONDELLE	1	1	1			

FIG. 11 BOTTOM COWLING — CAPOT INFERIEUR

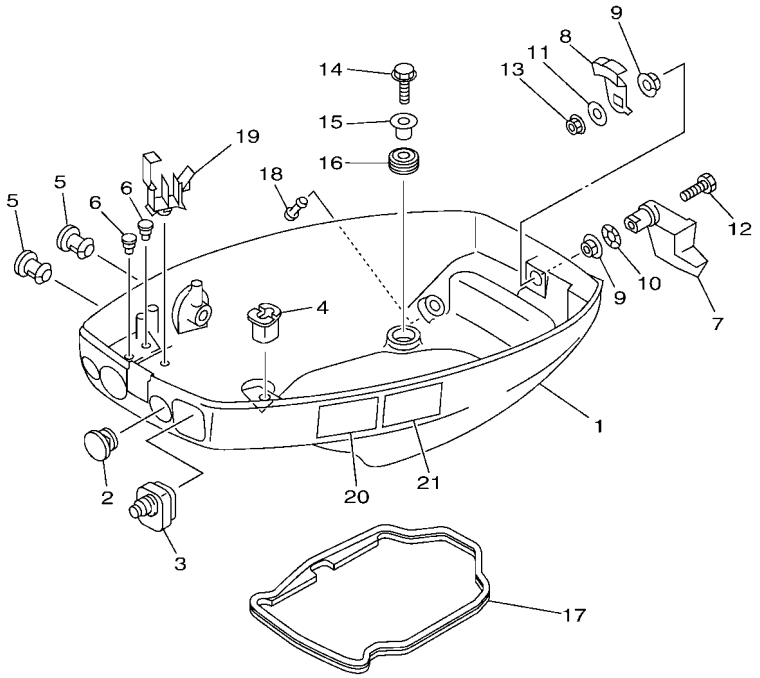

63VL300-R110

REF. NO.	PART NO. N° PIECES	DESCRIPTION DESCRIPTION	6MR1	6MR2	63WP			REMARKS REMARQUES
1	63V–42711–03–8D	COWLING, BOTTOM 1 CUVETTE 1	1	1	1			
2	682–42725–02	GROMMET PASSE-FIL	1	1	1			
3	63V–42726–01	GROMMET PASSE-FIL	1	1	1			
4	682–42727–01	GROMMET PASSE-FIL	1	1	1			
5	6G1–42748–01	GROMMET PASSE-FIL	2	2	2			
6	90480–06M19	GROMMET PASSE-FIL	2	2	2			
7	63V–42815–01–8D	LEVER, CLAMP 1 LEVIER, PRESSE 1	1	1	1			
8	6E7–42816–00	LEVER, CLAMP 2 LEVIER, PRESSE 2	1	1	1			
9	90386–12M45	BUSH DOUILLE	2	2	2			
10	90206–12052	WASHER, WAVE RONDELLE, ONDULEE	1	1	1			
11	90201–06068	WASHER, PLATE RONDELLE, PLATE	1	1	1			
12	97D95–06025	BOLT, HEXAGON DEEP RECESS VIS HEXAGONAL	1	1	1			
13	95380–06700	NUT ECROU	1	1	1			
14	97E95–06525	BOLT, HEXAGON W/W DEEP RECESS VIS HEXAGONAL AVC RONDELLE	4	4	4			
15	90387–06M52	COLLAR COLLERETTE	4	4	4			
16	90480–15M31	GROMMET PASSE-FIL	4	4	4			
17	63V–42716–02	RUBBER SEAL 1 JOINT EN CAOUTCHOUC 1	1	1	1			
18	6BL–44391–00	NIPPLE, HOSE RACCORD D'ESSENCE	1	1	1			
19	90465–25M57	CLAMP BRIDE	1	1	1			
20	6EE–42794–40	LABEL, WARNING (GENERAL) ETIQUETTE, AVERTISSEMENT	1	1	1			
21	6EE–42794–50	LABEL, WARNING (GENERAL) ETIQUETTE, AVERTISSEMENT	1	1	1			

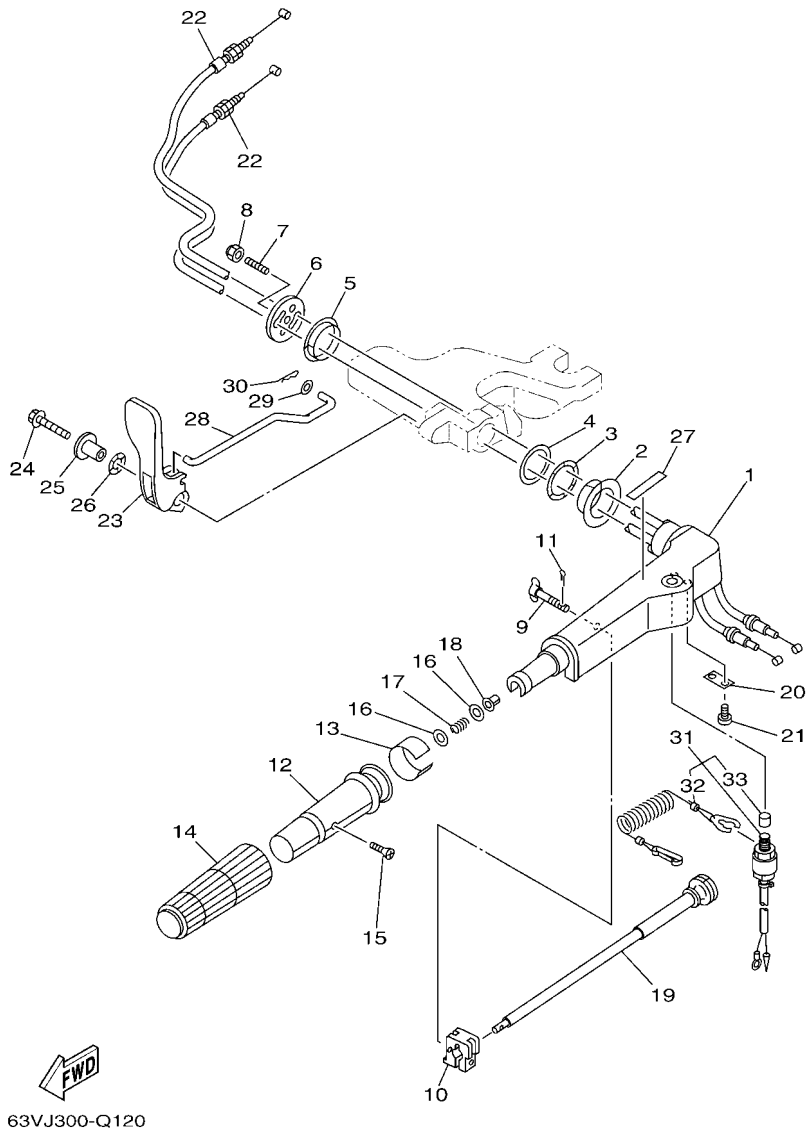

FIG. 12 STEERING — DIRECTION

REF. NO.	PART NO. N° PIECES	DESCRIPTION DESCRIPTION	6MR1	6MR2	63WP			REMARKS REMARQUES
1	63V–42111–01–8D	HANDLE, STEERING POIGNEE	1	1	1			
2	90386–34M97	BUSH DOUILLE	1	1	1			
3	90206–36M21	WASHER, WAVE RONDELLE, ONDULEE	1	1	1			
4	90202–36M55	WASHER, PLATE RONDELLE, PLATE	1	1	1			
5	90386–33M96	BUSH DOUILLE	1	1	1			
6	6G1–42131–02	COVER, HANDLE STEERING COUVERCLE	1	1	1			
7	90116–08016	BOLT, STUD GOUJON	1	1	1			
8	90185–08057	NUT, SELF-LOCKING ECROU,AUTO-BLOQUANT	1	1	1			
9	6G1–42125–01	BOLT, FRICTION ADJUSTING BOULON	1	1	1			
10	6G1–42126–00	FRICTION, STEERING HANDLE GRIP CUVETTE, POIGNEE DE DIRECTION	1	1	1			
11	91490–16010	PIN. COTTER GOUPILLE	1	1	1			
12	664–42119–00	GRIP, STEERING HANDLE POIGNEE, BARRE FRANCHE	1	1	1			
13	6H2–42137–10	INDICATOR, THROTTLE INDICATEUR, ACCELERATION	1	1	1			
14	6G1–42177–01	RUBBER, HANDLE CAOUTCHOUC, POIGNEE	1	1	1			
15	90152–05011	SCREW, COUNTERSUNK VIS, TETE NOYEE	1	1	1			
16	90201–10M02	WASHER, PLATE RONDELLE, PLATE	2	2	2			
17	90501–23215	SPRING, COMPRESSION RESSORT, COMPRESSION	1	1	1			
18	90386–08032	BUSH DOUILLE	1	1	1			
19	6G1–42138–01	LEVER, THROTTLE LEVIER, ACCELERATEUR	1	1	1			
20	6E0–42159–02	STAY SUPPORT	1	1	1			
21	97885–05012	SCREW, PAN HEAD VIS, A ENCOCHE	2	2	2			
22	6L2–26301–01	THROTTLE CABLE ASSY CABLE D'ACCELERATEUR	2	2	2			
23	63V–44111–02	HANDLE, GEAR SHIFT POIGNEE, LEVIER D'EMBRAYAGE	1	1	1			
24	90119–06M05	BOLT, WITH WASHER BOULON, AVEC RONDELLE	1	1	1			
25	90387–06M86	COLLAR COLLERETTE	1	1	1			
26	90206–15M18	WASHER, WAVE RONDELLE, ONDULEE	1	1	1			
27	6X3–44191–00	INDICATOR, SHIFT ETIQUETTE, EMBRAYAGE	1	1	1			

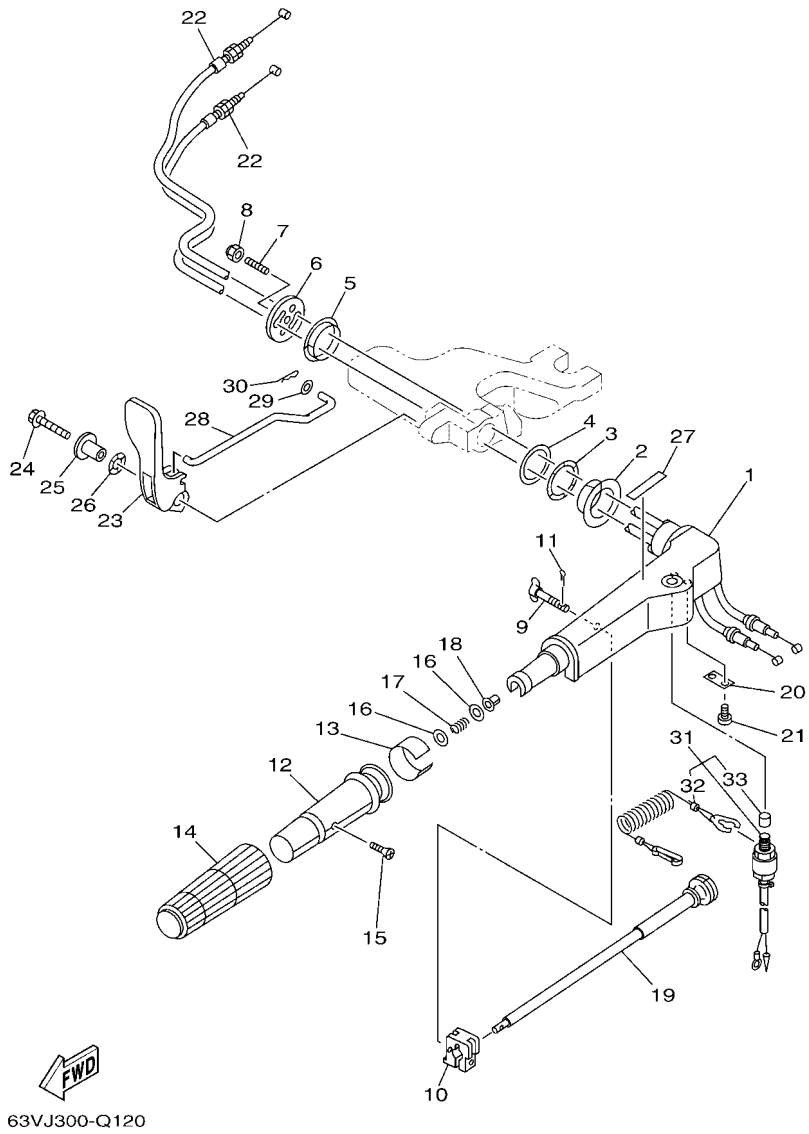

FIG. 12 STEERING

DIRECTION

REF. NO.	PART NO. N° PIECES	DESCRIPTION DESCRIPTION	6MR1	6MR2	63WP			REMARKS REMARQUES
28	63V–44124–02	LINK, SHIFT ROD BIELLETTE	1	1	1			
29	90202–06009	WASHER, PLATE RONDELLE, PLATE	1	1	1			
30	90468–18008	CLIP JONC	1	1	1			
31	65W–82575–01	ENGINE STOP SWITCH ASSY COUPE CIRCUIT CPLT	1	1	1			
32	682–82556–00	.LANYARD, STOP SWITCH .CORDON DU COUPE CIRCUIT	1	1	1			
33	689–8257Y–00	.CAP .COUVERCLE	1	1	1			

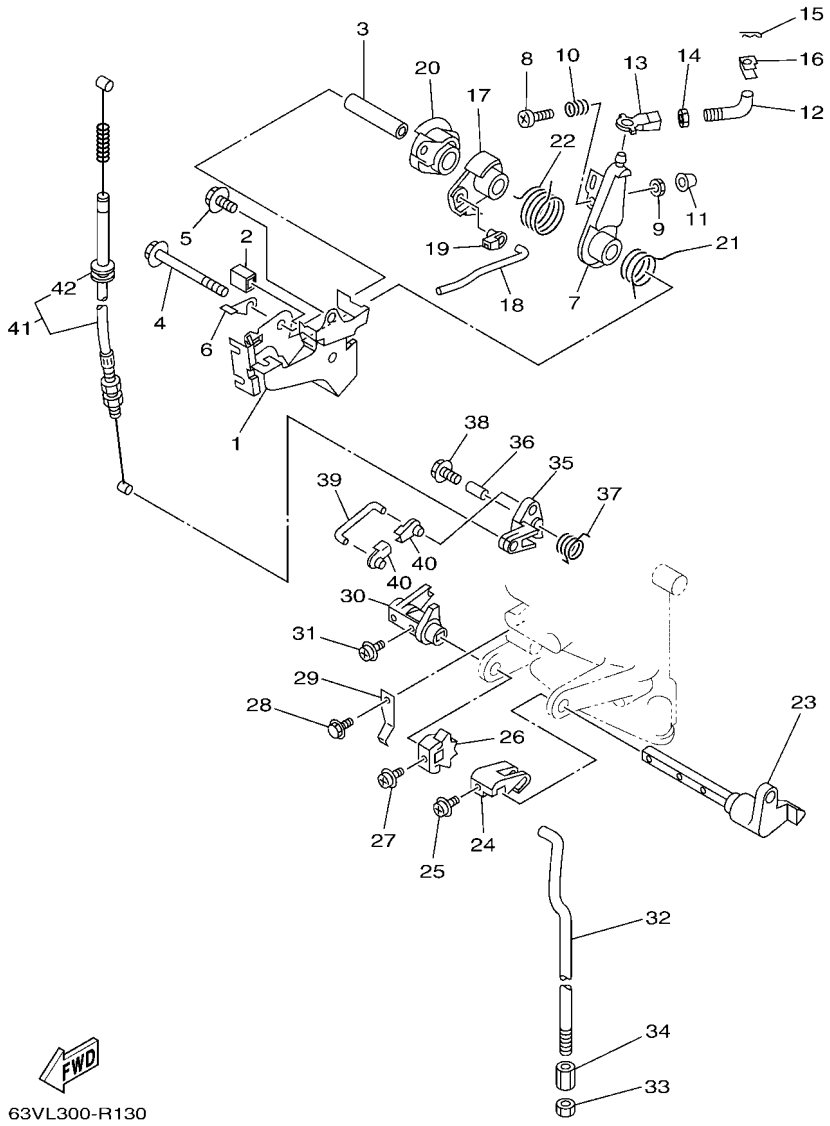

FIG. 13 CONTROL — COMMANDE

REF. NO.	PART NO. N° PIECES	DESCRIPTION DESCRIPTION	6MR1	6MR2	63WP			REMARKS REMARQUES
1	63V–14497–02	STAY, THROTTLE WIRE SUPPORT DE BOISSEAU	1	1	1			
2	689–44194–01	CAP CAPUCHON	1	1	1			
3	90387–06M50	COLLAR COLLERETTE	1	1	1			
4	95D95–06065	BOLT, FLANGE DEEP RECESS BOULON FIXATION	1	1	1			
5	97E95–06512	BOLT, HEXAGON W/W DEEP RECESS VIS HEXAGONAL AVC RONDELLE	1	1	1			
6	63V–41282–00	STOPPER, FREE ACCEL. LINK VERROU	1	1				
7	63V–41631–01	LEVER, MAGNETO CONTROL LEVIER, COMMANDE D'AVANCE	1	1	1			
8	97885–06030	SCREW, PAN HEAD VIS, A ENCOCHE	1	1	1			
9	95380–06600	NUT, HEXAGON ECROU	1	1	1			
10	90501–12M16	SPRING, COMPRESSION RESSORT, COMPRESSION	1	1	1			
11	688–44194–00	CAP CAPUCHON	1	1	1			
12	63V–41238–00	JOINT, LINK RACCORD	1	1	1			
13	6H4–41237–00	JOINT, LINK RACCORD	1	1	1			
14	95380–05700	NUT ECROU	1	1	1			
15	90468–10005	CLIP JONC	1	1	1			
16	63V–41223–00	WASHER, LOCK 1 RONDELLE, FREIN 1	1	1	1			
17	63V–41283–01	LEVER, FREE ACCEL. LEVIER	1	1	1			
18	63V–41211–00	LINK, ACCEL. BIELLETTE, ACCELERATION	1	1	1			
19	661–41262–02	JOINT, CHOKE LEVER RACCORD, LEVIER DE STARTER	1	1	1			
20	63V–41638–00	PULLEY POULIE	1	1	1			
21	90508–16M37	SPRING, TORSION RESSORT, TORSION	1	1	1			
22	90508–20M38	SPRING, TORSION RESSORT, TORSION	1	1	1			
23	63V–44123–02	ARM, SHIFT ROD BRAS, TIGE D'INVERSION	1	1	1			
24	63V–44121–01	LEVER, SHIFT ROD LEVIER, TIGE D'INVERSION	1	1	1			
25	90159–05M25	SCREW, WITH WASHER VIS, AVEC RONDELLE	1	1	1			
26	63V–44125–00	LEVER, SHIFT ROD LEVIER, TIGE D'INVERSION	1	1	1			
27	90159–05M25	SCREW, WITH WASHER VIS, AVEC RONDELLE	1	1	1			

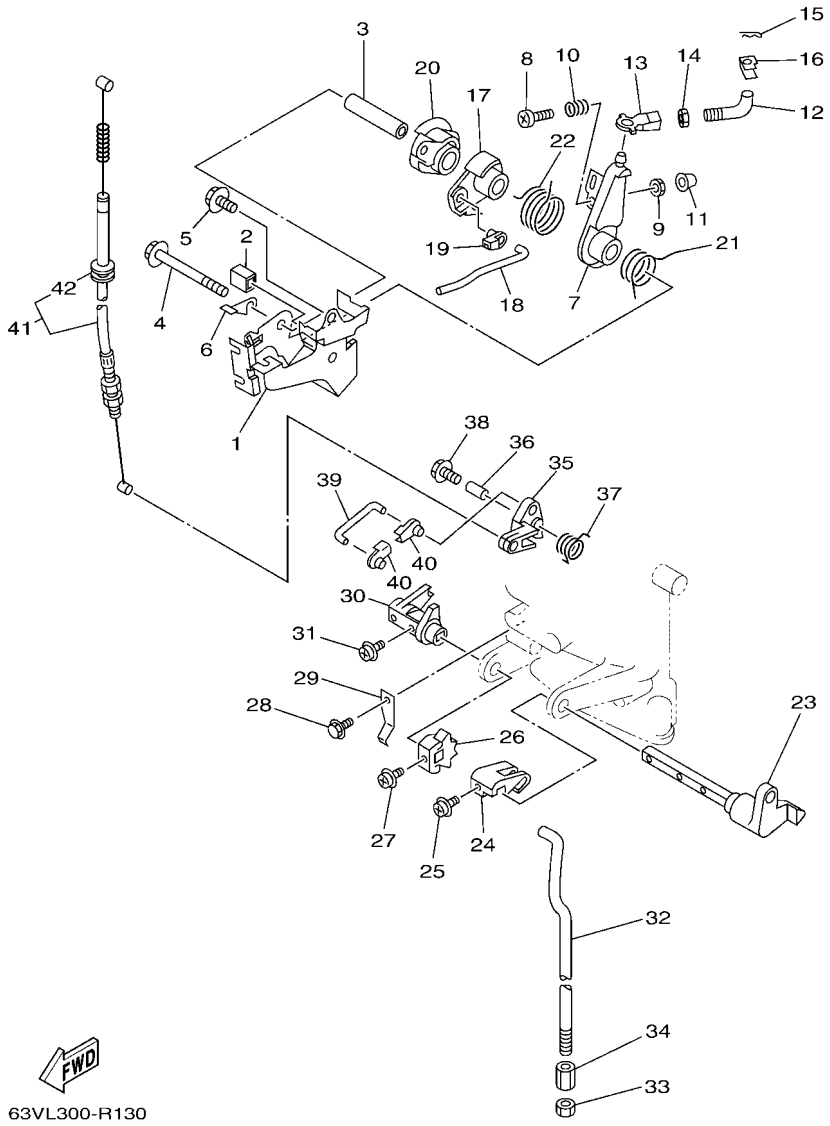

FIG. 13 CONTROL — COMMANDE

REF. NO.	PART NO. N° PIECES	DESCRIPTION DESCRIPTION	6MR1	6MR2	63WP			REMARKS REMARQUES
28	95D95–06012	BOLT, FLANGE DEEP RECESS BOULON FIXATION	1	1	1			
29	63V–44116–00	SPRING RESSORT	1	1	1			
30	63V–44122–01	BUSHING, SHIFT ROD LEVER DOUILLE, LEVIER D'EMBRAYAGE	1	1	1			
31	90159–05M25	SCREW, WITH WASHER VIS, AVEC RONDELLE	1	1	1			
32	63V–44143–01	ROD, SHIFT 1 TIGE D'EMBRAYAGE 1	1	1	1			
33	95380–06700	NUT ECROU	1	1	1			
34	61N–44146–00	CONNECTOR, SHIFT ROD 2 CONNECTEUR, TIGE D'INVERSION 2	1	1	1			
35	63V–15746–10	ARM BRAS	1	1	1			
36	90387–06M06	COLLAR COLLERETTE	1	1	1			
37	90508–08M39	SPRING, TORSION RESSORT, TORSION	1	1	1			
38	97E95–06520	BOLT, HEXAGON W/W DEEP RECESS VIS HEXAGONAL AVC RONDELLE	1	1	1			
39	6L2–15747–00	LINK BIELLETTE	1	1	1			
40	661–41262–02	JOINT, CHOKE LEVER RACCORD, LEVIER DE STARTER	2	2	2			
41	63V–15770–01	CABLE COMP., STARTER STOP CABLE, BUTEE DE DEMAR	1	1	1			
42	90480–10M16	.GROMMET .PASSE-FIL	1	1	1			

FIG. 14 REMO CON ATTACHMENT — COMMANDE A DISTANCE

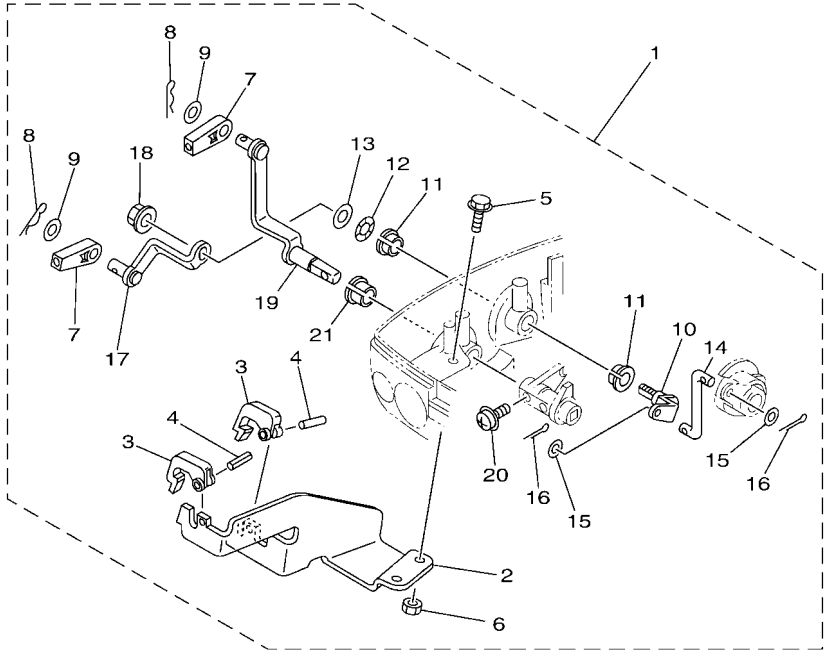

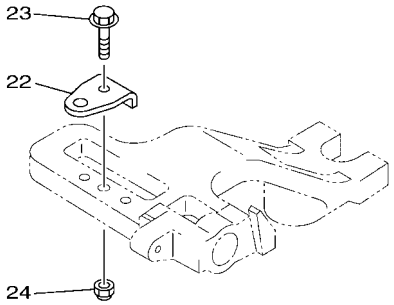

63VN300-S140

REF. NO.	PART NO. N° PIECES	DESCRIPTION DESCRIPTION	6MR1	6MR2	63WP			REMARKS REMARQUES
1	63V–48501–00	REMOTE CONT. ATTACHMENT ASSY. COMMANDE A DISTANCE (KIT)	1	1	1			AP AP
2	63V–48531–00	.BRACKET, REMOTE CONTROL 1 .ETRIER 1, COMMANDE A DISTANCE	1	1	1			
3	682–48538–50	.CLAMP, CABLE 1 .COLLIER	2	2	2			
4	91690–30012	.PIN, SPRING .AGRAFFE	2	2	2			
5	97595–06516	.BOLT, WITH WASHER .VIS HEXAGONAL AVC RONDELLE	2	2	2			
6	95380–06600	.NUT, HEXAGON .ECROU	2	2	2			
7	6FM–48344–00	.CABLE END, REMOTE CONTROL .CHAPE CABLE	2	2	2			
8	90468–18008	.CLIP .JONC	2	2	2			
9	90201–08M12	.WASHER, PLATE .RONDELLE, PLATE	2	2	2			
10	63V–42154–00	.LEVER, THROTTLE CONTROL .LEVIER DE COMMANDE D'AVANCE	1	1	1			
11	90386–10025	.BUSH .DOUILLE	2	2	2			
12	90206–10M04	.WASHER, WAVE .RONDELLE, ONDULEE	1	1	1			
13	90201–10M02	.WASHER, PLATE .RONDELLE, PLATE	1	1	1			
14	63V–42192–00	.ROD 2 .TRINGLE 2	1	1	1			
15	90201–04M06	.WASHER, PLATE .RONDELLE, PLATE	2	2	2			
16	91490–20010	.PIN. COTTER .GOUPILLE	2	2	2			
17	63V–48534–00	.THROTTLE LEVER, CONTROL .LEVIER D'ACCELERATION	1	1	1			
18	95780–08300	.NUT, FLANGE .ECROU	1	1	1			
19	63V–48544–00	.LEVER, SHIFTCONTROL .POIGNEE, INVERSION	1	1	1			
20	90159–05M25	.SCREW, WITH WASHER .VIS, AVEC RONDELLE	1	1	1			
21	90386–10009	.BUSH .DOUILLE	1	1	1			
22	63V–48511–01	HOOK, STEERING ATTACHE, DIRECTION	1	1	1			AP AP
23	97E75–08535	BOLT, HEXAGON W/W DEEP RECESS VIS HEXAGONAL AVC RONDELLE	1	1	1			AP AP
24	90185–08057	NUT, SELF-LOCKING ECROU,AUTO-BLOQUANT	1	1	1			AP AP

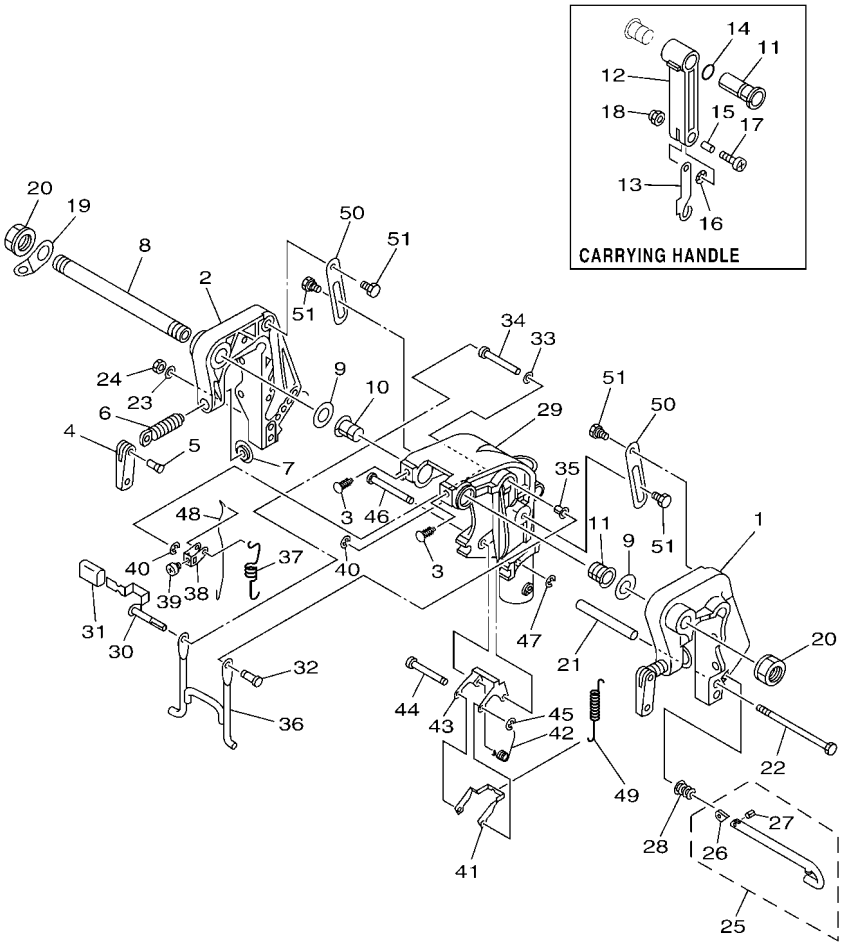

FIG. 15 BRACKET 1 SUPPORT 1

REF. NO.	PART NO. N° PIECES	DESCRIPTION DESCRIPTION	6MR1	6MR2	63WP			REMARKS REMARQUES
1	63V–43111–07–8D	BRACKET, CLAMP 1 PRESSE 1	1	1	1			
2	63V–43112–08–8D	BRACKET, CLAMP 2 PRESSE 2	1	1	1			
3	90269–07015	RIVET RIVET	2	2	2			
4	6E0–43118–01	HANDLE, TRANSOM CLAMP POIGNEE DE VIS DE PRESSE	2	2	2			
5	90243–04M01	PIN GOUPILLE	2	2	2			
6	6E7–43116–00	SCREW, TRANSOM CLAMP VIS DE PRESSE	2	2	2			
7	648–43114–01	PAD, TRANSOM CLAMP RONDELLE D'APPUI	2	2	2			
8	69A–43131–00	BOLT, CLAMP BRACKET BOULON, PRESSE	1	1	1			FOR RIDE GUIDE FOR RIDE GUIDE
9	90202–22M54	WASHER, PLATE RONDELLE, PLATE	2	2	2			
10	90386–22M94	BUSH DOUILLE	1	1	1			
11	90386–22M94	BUSH DOUILLE	1		1			
	90386–22M69	BUSH DOUILLE		1	1			CARRYING HANDLE CARRYING HANDLE
12	63V–42731–00–8D	CARRYING HANDLE POIGNEE DE PORTAGE		1	1			CARRYING HANDLE CARRYING HANDLE
13	63V–43676–01	HOOK CROCHET		1	1			CARRYING HANDLE CARRYING HANDLE
14	93210–20M65	O-RING JOINT TORIQUE		1	1			CARRYING HANDLE CARRYING HANDLE
15	90387–06M75	COLLAR COLLERETTE		1	1			CARRYING HANDLE CARRYING HANDLE
16	90206–08010	WASHER, WAVE RONDELLE, ONDULEE		1	1			CARRYING HANDLE CARRYING HANDLE
17	97885–06025	SCREW, PAN HEAD VIS, A ENCOCHE		1	1			CARRYING HANDLE CARRYING HANDLE
18	95780–06300	NUT, FLANGE ECROU		1	1			CARRYING HANDLE CARRYING HANDLE
19	6J8–43113–01	PLATE, CLAMP BRACKET PLAQUETTE, PRESSE	1	1	1			
20	90185–22043	NUT, SELF-LOCKING ECROU,AUTO-BLOQUANT	2	2	2			
21	90387–06M13	COLLAR COLLERETTE	1	1	1			
22	90101–06M29	BOLT BOULON	1	1	1			
23	92995–06600	WASHER RONDELLE	1	1	1			
24	95380–06700	NUT ECROU	1	1	1			
25	689–43160–00	TILT ROD ASSY BROCHE D'INCLINAISON (ENS.)	1	1	1			
26	689–43165–00	.PLATE, TILT LOCK .TAQUET, BROCHE INCLINAISON	1	1	1			

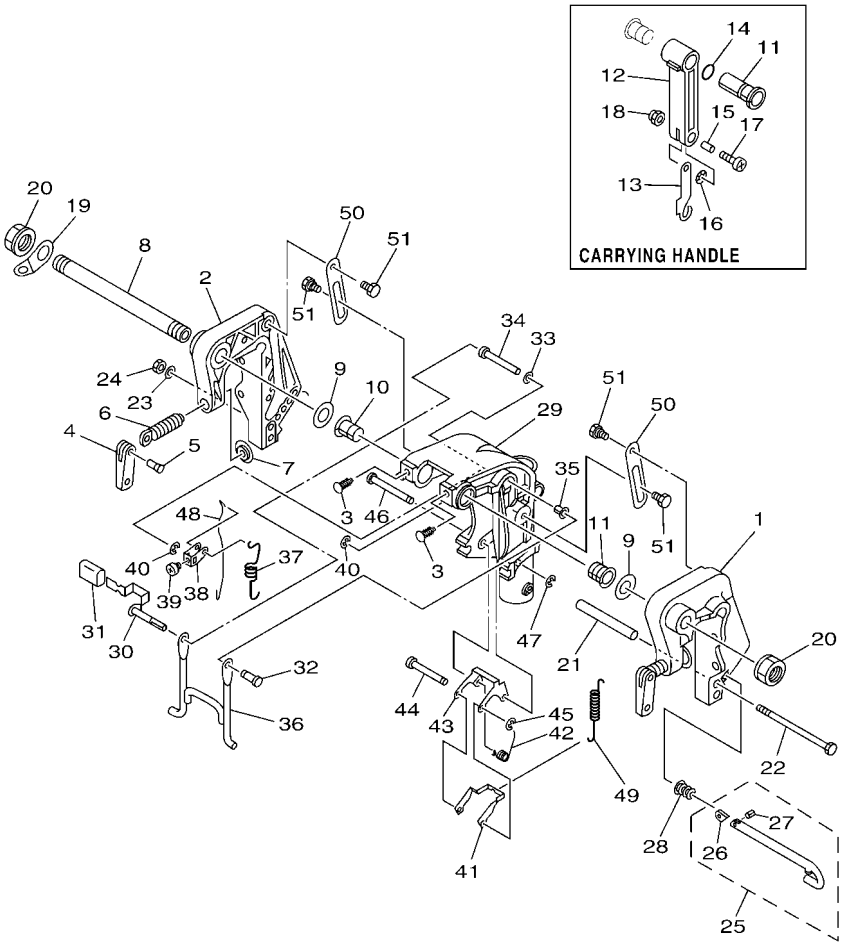

FIG. 15 BRACKET 1 SUPPORT 1

REF. NO.	PART NO. N° PIECES	DESCRIPTION DESCRIPTION	6MR1	6MR2	63WP			REMARKS REMARQUES
27	91690–30008	.PIN, SPRING .AGRAFFE	1	1	1			
28	90502–10M07	SPRING, CONICAL RESSORT, CONIQUE	1	1	1			
29	63V–43311–03–8D	BRACKET, SWIVEL 1 SUPPORT, PIVOT 1	1	1	1			
30	66M–43630–01	TILT LEVER ASSY LEVIER D'INCLINAISON	1	1	1			
31	682–43318–01	COVER CAPUCHON	1	1	1			
32	63V–43191–00	SHAFT, STOPPER AXE, BUTEE	1	1	1			
33	90202–07M60	WASHER, PLATE RONDELLE, PLATE	1	1	1			
34	90387–07M07	COLLAR COLLERETTE	1	1	1			
35	90386–07M95	BUSH DOUILLE	1	1	1			
36	66M–43350–01	RECEIVER ASSY RECEIVER ASSY	1	1	1			
37	90507–20M00	SPRING, TENSION RESSORT, TENSION	1	1	1			
38	63V–43641–01	LEVER, TILT LEVIER, INCLINAISON	1	1	1			
39	90157–05014	SCREW, PAN HEAD VIS, TETE TRONCONIQUE	1	1	1			
40	99080–05600	CIRCLIP CIRCLIP	2	2	2			
41	63V–43614–10	PLATE, TILT LOCK ETRIER, VERROUILLAGE MARCHE AR	1	1	1			
42	90508–18M41	SPRING, TORSION RESSORT, TORSION	1	1	1			
43	66R–43615–00	PLATE, TILT LOCK ETRIER, VERROUILLAGE MARCHE AR	1	1	1			
44	66R–43611–00	SHAFT, TILT LOCK AXE, VERROUILLAGE MARCHE AR	1	1	1			
45	93430–04M03	CIRCLIP CLIPS	1	1	1			
46	63V–43659–00	SHAFT, REVERSE LOCK AXE, VERROUILLAGE MARCHE AR	1	1	1			
47	99080–05600	CIRCLIP CIRCLIP	1	1	1			
48	66R–43617–00	ROD, TILT LOCK TIGE	1	1	1			
49	63V–43656–00	SPRING, REVERSE LOCK 1 RESSORT	1	1	1			
50	63V–43181–00	LEVER, TILT STOP 1 LEVIER VERROUILLAGE RELEVAGE 1	2	2	2			
51	90109–06M84	BOLT BOULON	4	4	4			

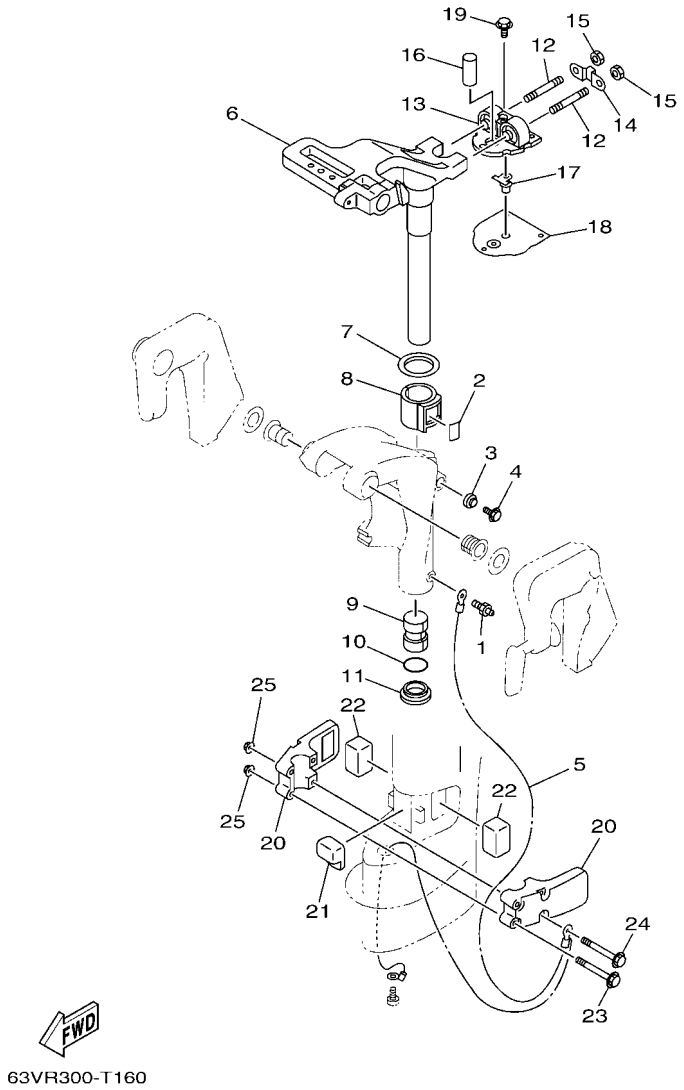

63VR300-T160

FIG. 16 BRACKET 2 — SUPPORT 2

REF. NO.	PART NO. N° PIECES	DESCRIPTION DESCRIPTION	6MR1	6MR2	63WP			REMARKS REMARQUES
1	93700–06M03	NIPPLE, GREASE PION	1	1	1			
2	63V–42528–00	PLATE, FRICTION PLAQUE, FRICTION	1	1	1			
3	689–43373–02	SEAL, DAMPER JOINT	1	1	1			
4	90105–06M07	BOLT, FLANGE BOULON, A COLLERETTE	1	1	1			
5	63V–82127–00	WIRE, LEAD 2 FIL 2	1	1	1			
6	63V–42511–04–8D	BRACKET, STEERING CADRE, DIRECTION	1	1	1			
7	90209–40008	WASHER RONDELLE	1	1	1			
8	65F–42537–00	BUSHING, PIVOT SHAFT COUSSINET	1	1	1			
9	90386–30048	BUSH DOUILLE	1	1	1			
10	93210–29M94	O-RING JOINT TORIQUE	1	1	1			
11	90386–30M60	BUSH DOUILLE	1	1	1			
12	90116–08M54	BOLT, STUD GOUJON	2	2	2			
13	63V–44514–01–CA	MOUNT DAMPER, UPPER SIDE SILENT-BLOC, SUPERIEUR LATERAL	1	1	1			
14	63V–44526–00	PLATE PLAQUE	1	1	1			
15	95380–08600	NUT ECROU	2	2	2			
16	90387–16002	COLLAR COLLERETTE	1	1	1			
17	63V–44366–02	DAMPER, WATER SEAL 2 JOINT, TUBE D'EAU 2	1	1	1			
18	63V–45114–A1	GASKET, UPPER CASING JOINT, TUBE D'ARBRE	1	1	1			
19	97E95–06518	BOLT, HEXAGON W/W DEEP RECESS VIS HEXAGONAL AVC RONDELLE	3	3	3			
20	63V–44551–01–8D	HOUSING, LOWER MOUNT RUBBER 1 BOITIER, SILENT-BLOC INFERIEUR	2	2	2			
21	63V–44557–01	MOUNT DAMPER, LOWER FRONT SILENT-BLOC, INFERIEUR AVANT	1	1	1			
22	682–44555–00	MOUNT DAMPER, LOWER SIDE SILENT-BLOC, INFERIEUR LATERAL	2	2	2			
23	97E75–06555	BOLT, HEXAGON W/W DEEP RECESS VIS HEXAGONAL AVC RONDELLE	2	2	2			
24	97E75–06575	BOLT, HEXAGON W/W DEEP RECESS VIS HEXAGONAL AVC RONDELLE	2	2	2			
25	90179–06M28	NUT ECROU	4	4	4			

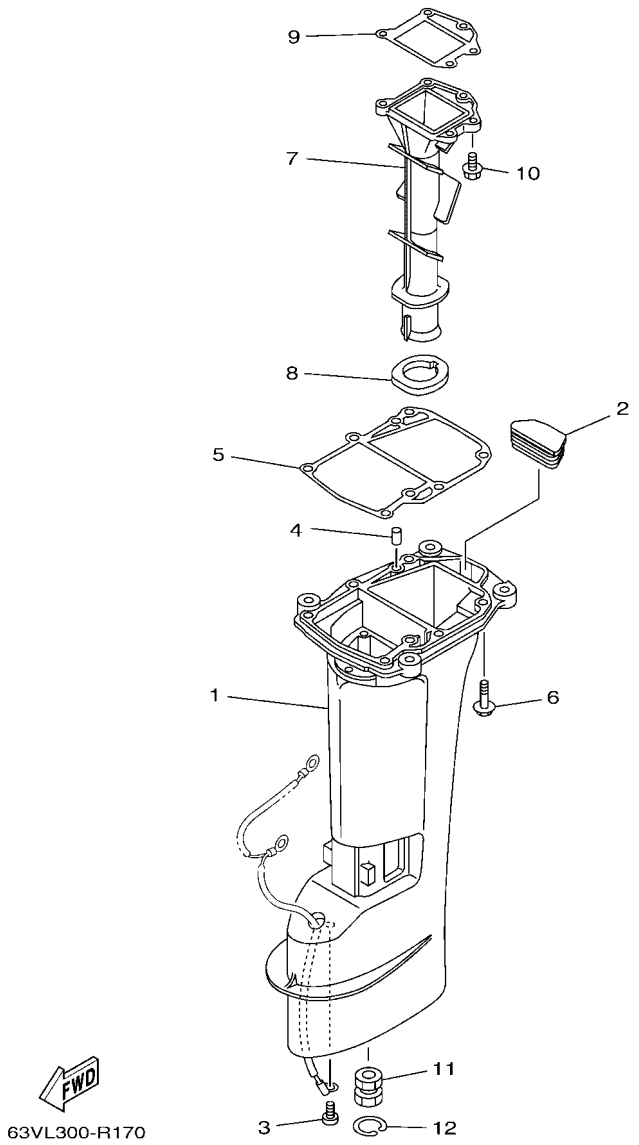

FIG. 17 UPPER CASING — FOURREAU

REF. NO.	PART NO. N° PIECES	DESCRIPTION DESCRIPTION	6MR1	6MR2	63WP			REMARKS REMARQUES
1	63V–45111–05–8D	CASING, UPPER FOURREAU	1	1	1			S(17.3") S(17.3")
	63V–45111–15–8D	CASING, UPPER FOURREAU			1			L(22.3") L(22.3")
2	63V–45126–01	PLATE, SEAL DAMPER PLAQUETTE	1	1	1			
3	90157–06M06	SCREW, PAN HEAD VIS, TETE TRONCONIQUE	1	1	1			
4	93606–12019	PIN, DOWEL GOUPILLE	2	2	2			
5	63V–45113–A1	GASKET, UPPER CASING JOINT, TUBE D'ARBRE	1	1	1			
6	97E75–08530	BOLT, HEXAGON W/W DEEP RECESS VIS HEXAGONAL AVC RONDELLE	6	6	6			
7	65F–41131–00–CA	MANIFOLD, EXT. 1 PIPE D'ECHAPPEMENT	1	1	1			
8	63V–41135–01	GASKET, EXHAUST MANIFOLD JOINT, PIPE D'ECHAPPEMENT	1	1	1			
9	63V–41133–A1	GASKET, EXHAUST MANIFOLD 1 JOINT, PIPE D'ECHAPPEMENT	1	1	1			
10	97E95–06520	BOLT, HEXAGON W/W DEEP RECESS VIS HEXAGONAL AVC RONDELLE	5	5	5			
11	682–45318–00	BUSHING, DRIVE SHAFT DOUILLE, ARBRE MOTEUR			1			L(22.3") L(22.3")
12	93420–30042	CIRCLIP CIRCLIP, TYPE S			1			L(22.3") L(22.3")

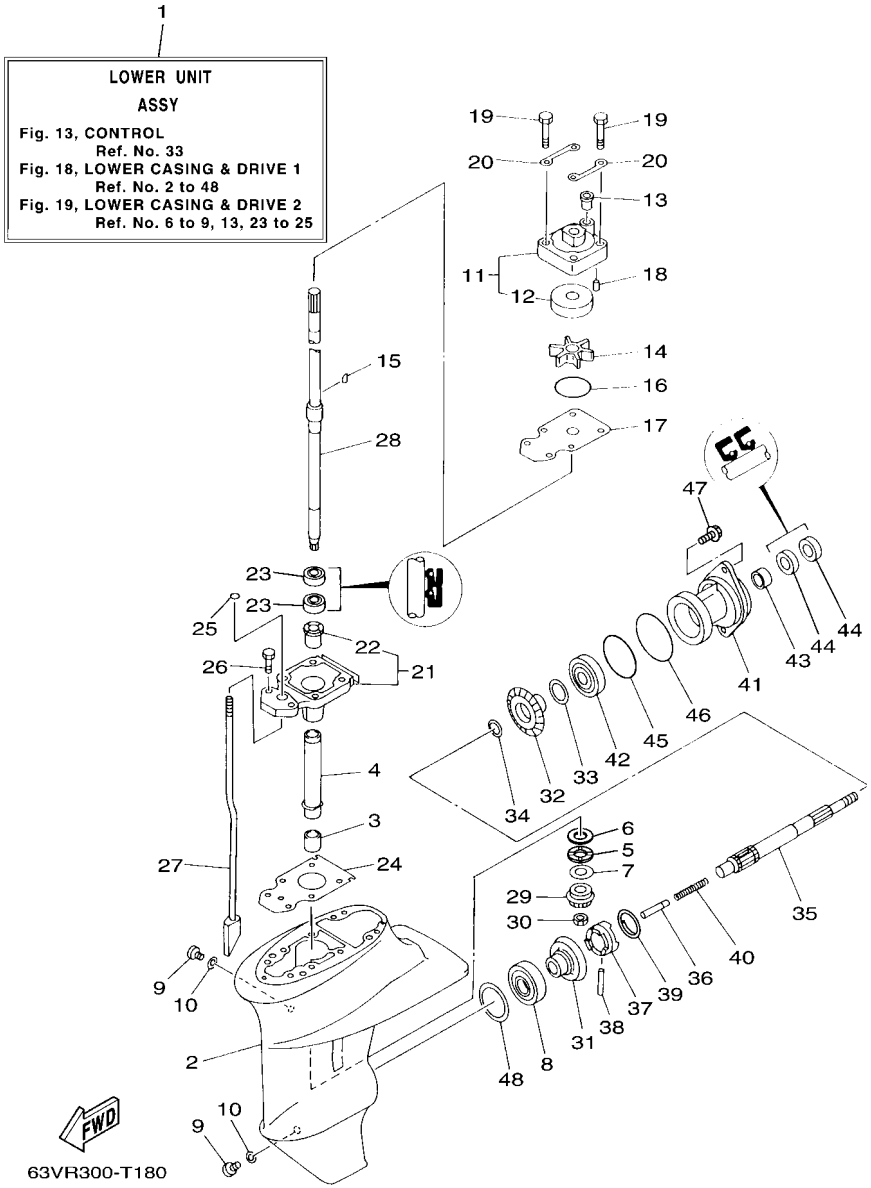

FIG. 18 LOWER CASING & DRIVE 1 — BOITIER D'HELICE TRANSMISSION1

REF. NO.	PART NO. N° PIECES	DESCRIPTION DESCRIPTION	6MR1	6MR2	63WP			REMARKS REMARQUES
1	63V–45300–05–8D	LOWER UNIT ASSY UNITE INFERIEURE (ENS.)	1	1	1			S(17.3") S(17.3")
	63V–45300–15–8D	LOWER UNIT ASSY UNITE INFERIEURE (ENS.)			1			L(22.3") L(22.3")
2	63V–45311–01–8D	CASING, LOWER BOITIER D'HELICE	1	1	1			
3	93315–314V8	BEARING ROULEMENT	1	1	1			
4	63V–45536–00	SLEEVE, DRIVE SHAFT MANCHON, ARBRE MOTEUR	1	1	1			
5	90209–14011	WASHER RONDELLE	1	1	1			
6	90201–15017	WASHER, PLATE RONDELLE, PLATE	1	1	1			
7	6E8–45587–10	SHIM (T:1.13MM) CALE (T:1.13MM)	1	1	1			UR UR
	6E8–45587–30	SHIM (T:1.20MM) CALE (T:1.20MM)	1	1	1			UR UR
8	93332–00005	BEARING ROULEMENT	1	1	1			
9	90340–08002	PLUG, STRAIGHT SCREW PLOT, FILETE DROIT	2	2	2			
10	90430–08003	GASKET JOINT	2	2	2			
11	63V–44301–00	WATER PUMP HOUSING COMP. CARTER, POMPE A EAU (ENS)	1	1	1			
12	63V–44322–00	.INSERT, CARTRIDGE .CUVETTE	1	1	1			
13	647–44366–01	DAMPER, WATER SEAL 2 JOINT, TUBE D'EAU 2	1	1	1			
14	63V–44352–01	IMPELLER TURBINE	1	1	1			
15	63V–44338–00	KEY, WOODRUFF CLAVETTE, VOLANT	1	1	1			
16	93210–44398	O-RING JOINT TORIQUE	1	1	1			
17	63V–44323–00	OUTER PLATE, CARTRIDGE PLAQUE EXTERIEURE	1	1	1			
18	93604–12M07	PIN, DOWEL CLAVETTE	2	2	2			
19	97D95–08045	BOLT, HEXAGON DEEP RECESS VIS HEXAGONAL	4	4	4			
20	63V–44328–01	PLATE PLAQUETTE	2	2	2			
21	63V–45331–00–CA	HOUSING, BEARING FLASQUE, ROULEMENT	1	1	1			
22	626–45316–09	.BUSHING, DRIVE SHAFT .DOUILLE, ARBRE MOTEUR	1	1	1			
23	93101–20048	OIL SEAL JOINT SPY	2	2	2			
24	63V–45315–A0	PACKING, LOWER CASING JOINT, BOITIER D'HELICE	1	1	1			
25	93210–06ME6	O-RING JOINT TORIQUE	1	1	1			

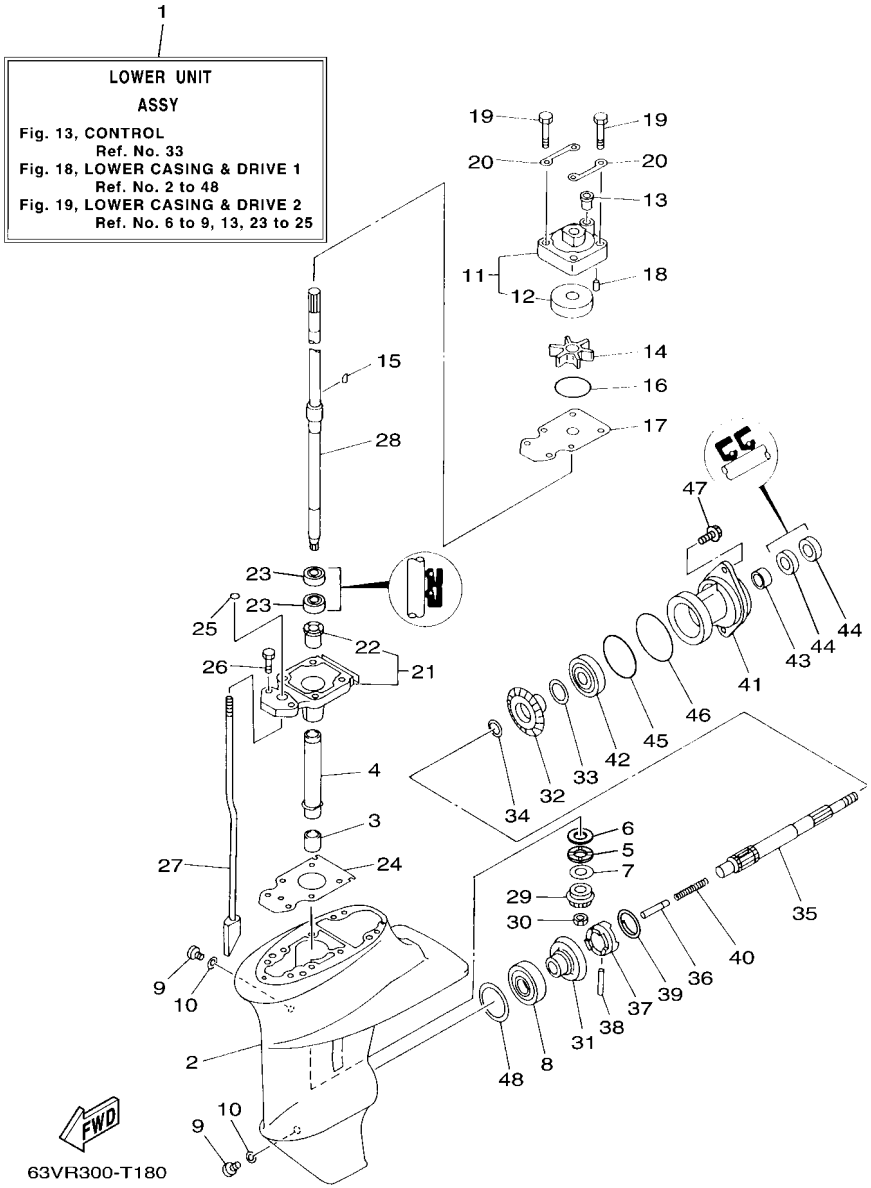

FIG. 18 LOWER CASING & DRIVE 1 — BOITIER D'HELICE TRANSMISSION1

REF. NO.	PART NO. N° PIECES	DESCRIPTION DESCRIPTION	6MR1	6MR2	63WP			REMARKS REMARQUES
26	97080–08025	BOLT BOULON	2	2	2			
27	63V–44150–00	SHIFT CAM ASSY CAME D'INVERSION	1	1	1			S(17.3") S(17.3")
	63V–44150–10	SHIFT CAM ASSY CAME D'INVERSION			1			L(22.3") L(22.3")
28	63V–45510–01	DRIVE SHAFT ASSY ARBRE MOTEUR (ENS.)	1	1	1			S(17.3") S(17.3")
	63V–45510–11	DRIVE SHAFT ASSY ARBRE MOTEUR (ENS.)			1			L(22.3") L(22.3")
29	63V–45551–00	PINION (13T) PIGNON D'ATTAQUE (13D)	1	1	1			
30	90179–08M06	NUT ECROU	1	1	1			
31	6E7–45560–01	GEAR 1 (27T) PIGNON 1 (27T)	1	1	1			
32	6E7–45571–00	GEAR 2 (27T) PIGNON 2 (27T)	1	1	1			
33	626–45577–00	SHIM (T:0.10MM) CALE (T:0.10MM)	1	1	1			UR UR
	626–45577–10	SHIM (T:0.20MM) CALE (T:0.20MM)	1	1	1			UR UR
	626–45577–20	SHIM (T:0.30MM) CALE (T:0.30MM)	1	1	1			UR UR
	626–45577–30	SHIM (T:0.40MM) CALE (T:0.40MM)	1	1	1			UR UR
	626–45577–40	SHIM (T:0.50MM) CALE (T:0.50MM)	1	1	1			UR UR
34	90201–17682	WASHER, PLATE RONDELLE, PLATE	1	1	1			
35	683–45611–00	SHAFT, PROPELLER ARBRE, HELICE	1	1	1			
36	650–45635–00	PLUNGER, SHIFT POUSSOIR D'EMBRAYAGE	1	1	1			
37	682–45631–00	CLUTCH, DOG CRABOT	1	1	1			
38	90250–05010	PIN, STRAIGHT GOUPILLE, DROITE	1	1	1			
39	648–45633–11	RING, CROSS PIN JONC, GOUPILLE CRABOT	1	1	1			
40	90501–14M06	SPRING, COMPRESSION RESSORT, COMPRESSION	1	1	1			
41	683–45361–02–8D	CAP, LOWER CASING COUVERCLE, BOITIER D'HELICE	1	1	1			
42	93306–00501	BEARING ROULEMENT	1	1	1			
43	93315–317U2	BEARING ROULEMENT	1	1	1			
44	93101–17054	OIL SEAL JOINT SPY	2	2	2			
45	93210–57M09	O-RING JOINT TORIQUE	1	1	1			
46	93210–56M80	O-RING JOINT TORIQUE	1	1	1			

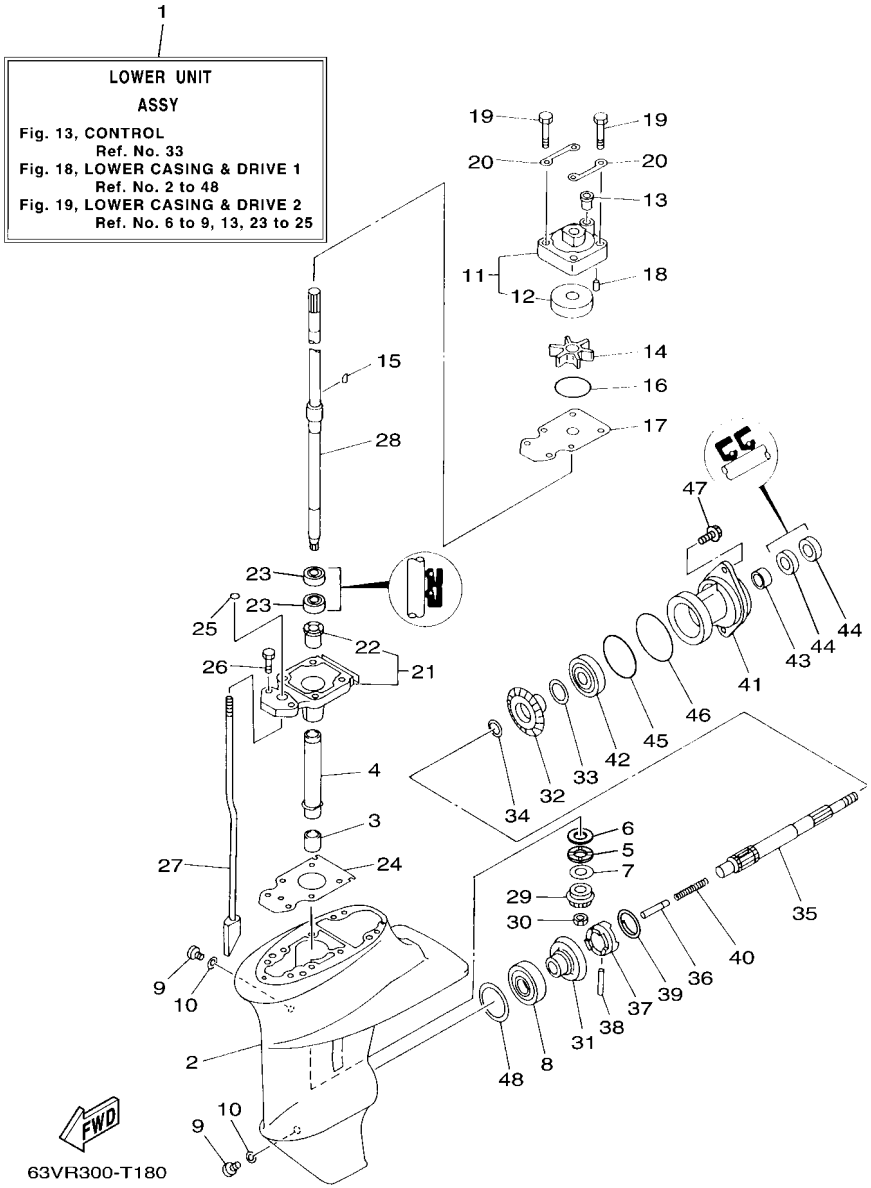

FIG. 18 LOWER CASING & DRIVE 1 — BOITIER D'HELICE TRANSMISSION1

REF. NO.	PART NO. N° PIECES	DESCRIPTION DESCRIPTION	6MR1	6MR2	63WP			REMARKS REMARQUES
47	97E95–06520	BOLT, HEXAGON W/W DEEP RECESS VIS HEXAGONAL AVC RONDELLE	2	2	2			
48	664–45567–01	SHIM (T:0.10MM) CALE (T:0.10MM)	1	1	1			UR UR
	664–45567–10	SHIM (T:0.12MM) CALE (T:0.12MM)	1	1	1			UR UR
	664–45567–20	SHIM (T:0.15MM) CALE (T:0.15MM)	1	1	1			UR UR
	664–45567–30	SHIM (T:0.18MM) CALE (T:0.18MM)	1	1	1			UR UR
	664–45567–40	SHIM (T:0.30MM) CALE (T:0.30MM)	1	1	1			UR UR
	664–45567–50	SHIM (T:0.40MM) CALE (T:0.40MM)	1	1	1			UR UR
	664–45567–60	SHIM (T:0.50MM) CALE (T:0.50MM)	1	1	1			UR UR

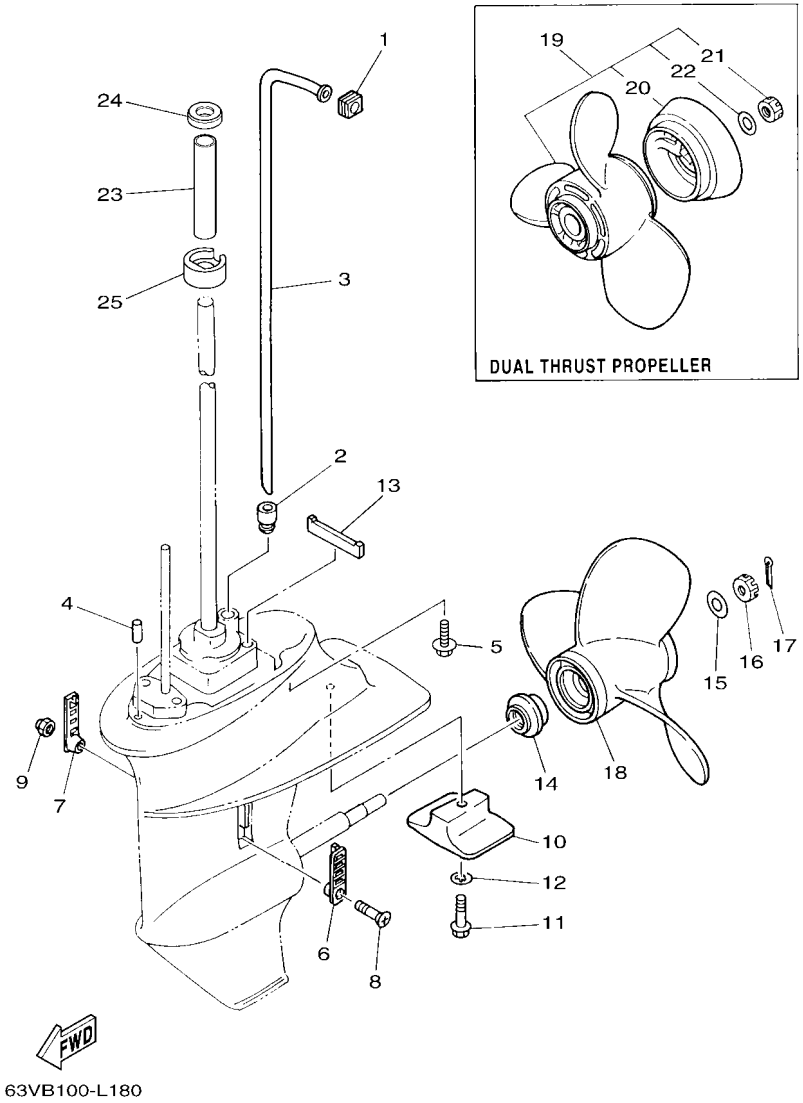

FIG. 19 LOWER CASING & DRIVE 2 — BOITIER D'HELICE TRANSMISSION2

REF. NO.	PART NO. N° PIECES	DESCRIPTION DESCRIPTION	6MR1	6MR2	63WP			REMARKS REMARQUES
1	63V–44365–11	DAMPER, WATER SEAL 1 JOINT, TUBE D'EAU 1	1	1	1			
2	63V–44368–01	RUBBER, WATER SEAL 4 CAOUTCHOUC EAU JUNTA 4	1	1	1			
3	63V–44361–01	TUBE, WATER 1 TUBE D'EAU 1	1	1	1			S(17.3") S(17.3")
	63V–44361–11	TUBE, WATER 1 TUBE D'EAU 1			1			L(22.3") L(22.3")
4	93604–12M07	PIN, DOWEL CLAVETTE	2	2	2			
5	97E75–08530	BOLT, HEXAGON W/W DEEP RECESS VIS HEXAGONAL AVC RONDELLE	4	4	4			
6	6G1–45214–00	COVER, WATER INLET 1 GRILLE, ENTREE D'EAU 1	1	1	1			
7	63V–45215–00	COVER, WATER INLET 2 GRILLE, ENTREE D'EAU 2	1	1	1			
8	90152–05011	SCREW, COUNTERSUNK VIS, TETE NOYEE	1	1	1			
9	90185–05002	NUT, NYLON ECROU,AUTO-BLOQUANT	1	1	1			
10	61N–45251–01	ANODE ANODE	1	1	1			
11	95D95–06030	BOLT, FLANGE DEEP RECESS BOULON FIXATION	1	1	1			
12	92990–06300	WASHER, INTERNAL TOOTH RONDELLE, DENTURE INTERNE	1	1	1			
13	63V–45375–00	DAMPER, SEAL BOURRELET, CAOUTCHOUC	1	1	1			
14	6E7–45987–01	SPACER 1 ENTRETOISE 1	1	1	1			
15	90201–10M01	WASHER, PLATE RONDELLE, PLATE	1	1	1			
16	90171–10M01	NUT, CASTLE ECROU, CRENELE	1	1	1			
17	91490–30025	PIN. COTTER GOUPILLE	1	1	1			
18	683–45949–00	PROPELLER (3X9-1/2"X6-1/2"-J) HELICE (3X9-1/2"X6-1/2"-J)	1	1	1			UR UR
	683–45947–00	PROPELLER (3X9-1/4"X8"-J) HELICE (3X9-1/4"X8"-J)	1	1	1			UR UR
	63V–45947–00	PROPELLER (3X9-1/4"X8"-J) HELICE (3X9-1/4"X8"-J)	1	1	1			UR UR
	63V–45945–10	PROPELLER (3X9-1/4"X9"-J1) HELICE (3X9-1/4"X9"-J1)	1	1	1			UR UR
	683–45945–00	PROPELLER (3X9-1/4"X9"-J) HELICE (3X9-1/4"X9"-J)	1	1	1			UR UR
	683–45952–00	PROPELLER (3X9-1/4"X9-3/4"-J) HELICE (3X9-1/4"X9-3/4"-J)	1	1	1			UR UR
	63V–45952–10	PROPELLER (3X9-1/4"X10"-J1) HELICE (3X9-1/4"X10"-J1)	1	1	1			UR UR
	683–45943–00	PROPELLER (3X9-1/4"X10-1/2"-J) HELICE (3X9-1/4"X10-1/2"-J)	1	1	1			UR UR
	63V–45943–10	PROPELLER (3X9-1/4"X11"-J1) HELICE (3X9-1/4"X11"-J1)	1	1	1			UR UR

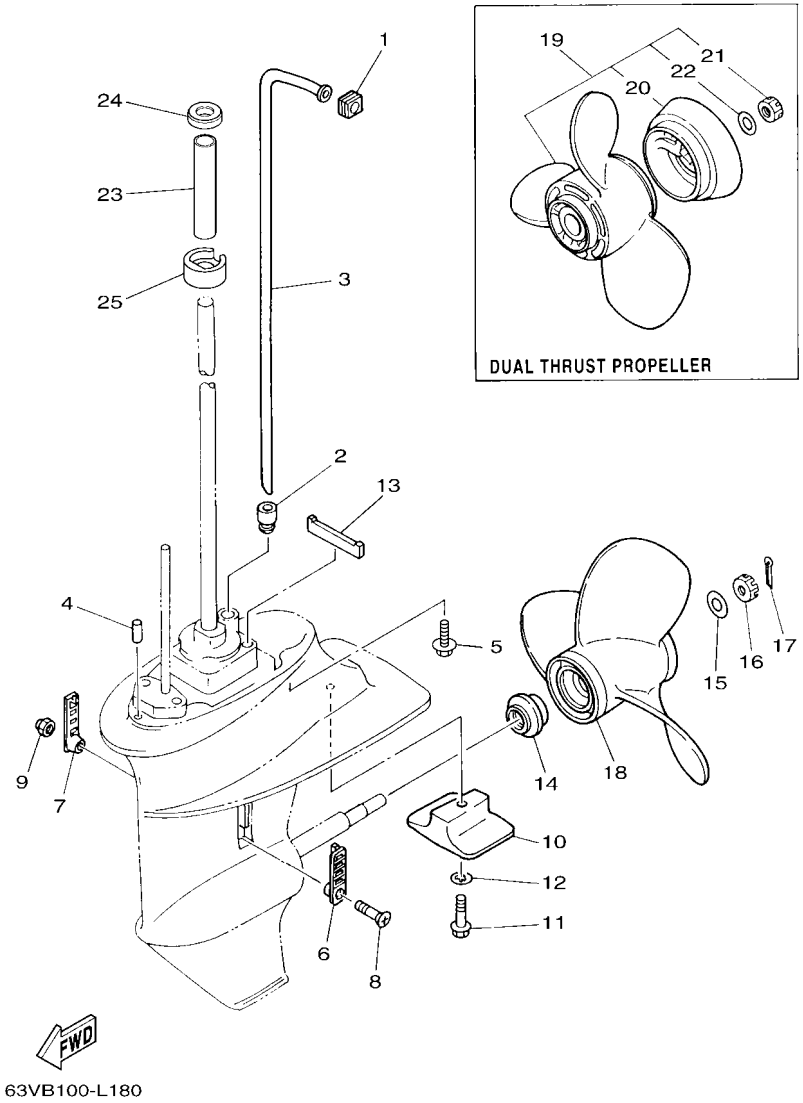

FIG. 19 LOWER CASING & DRIVE 2 — BOITIER D'HELICE TRANSMISSION2

REF. NO.	PART NO. N° PIECES	DESCRIPTION DESCRIPTION	6MR1	6MR2	63WP			REMARKS REMARQUES
18	683–45941–00	PROPELLER (3X9-1/4"X12"-J) HELICE (3X9-1/4"X12"-J)	1	1	1			UR UR
19	683–W4592–02	PROPELLER (3X9-3/4"X6-1/2"-J) HELICE (3X9-3/4"X6-1/2"-J)	1	1	1			UR UR
	683–W4591–02	PROPELLER (3X9-3/4"X8"-J) HELICE (3X9-3/4"X8"-J)	1	1	1			UR UR
20	6E7–45986–00	.RING, DEFLECTOR .DEFLECTEUR DE CERCLE	1	1	1			
21	90171–10M07	.NUT, CASTLE .ECROU, CRENELE	1	1	1			
22	90201–10M02	.WASHER, PLATE .RONDELLE, PLATE	1	1	1			
23	63V–44362–00	TUBE, WATER 2 TUBE D'EAU 2			1			L(22.3") L(22.3")
24	63V–44375–01	GROMMET, WATER TUBE 1 PASSE-FIL, TUBE D'EAU 1			1			L(22.3") L(22.3")
25	63V–44376–01	GROMMET, WATER TUBE 2 PASSE-FIL, TUBE D'EAU 2			1			L(22.3") L(22.3")

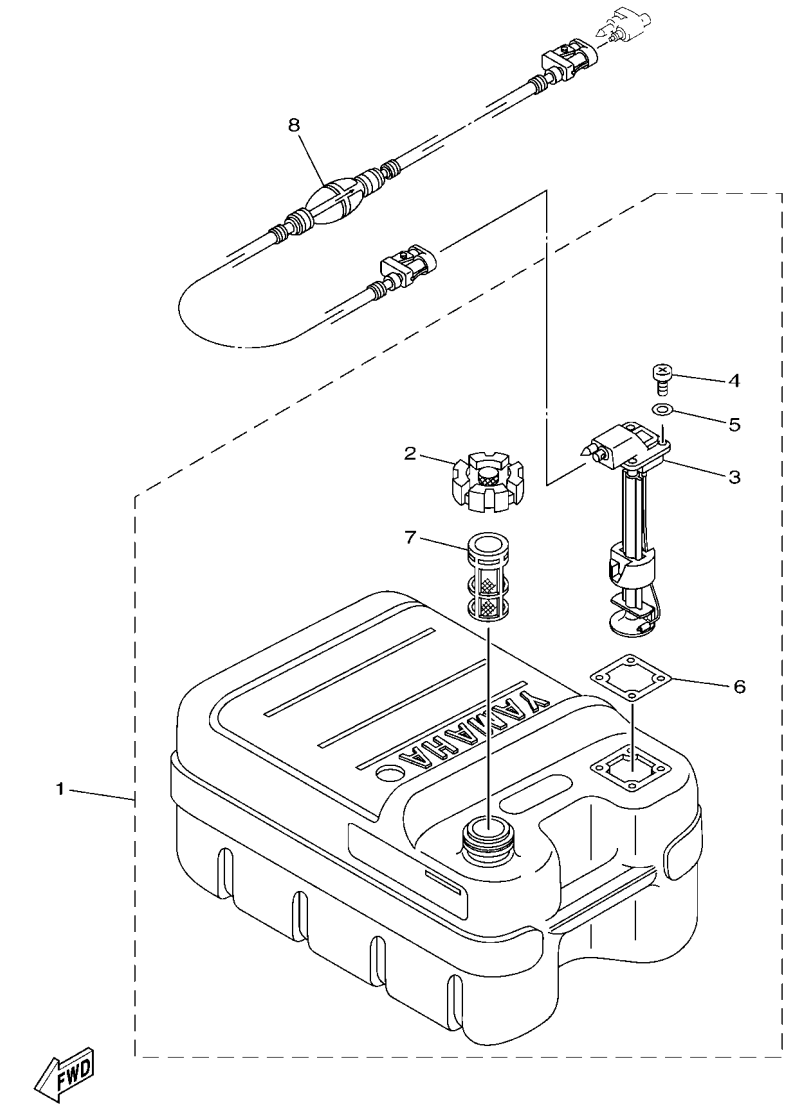

6CAD300-U280

FIG. 20 FUEL TANK 1 — RESERVOIR A CARBURANT 1

REF. NO.	PART NO. N° PIECES	DESCRIPTION DESCRIPTION	6MR1	6MR2	63WP			REMARKS REMARQUES
1	6YJ–24201–31	FUEL TANK ASSY (24L) RESERVOIR A ESSENCE (ENS.):24L	1		1			AP EXCEPT FOR RUS AP EXCEPT FOR RUS
2	6YJ–24610–01	.CAP ASSY .BOUCHON	1		1			
3	6Y1–24260–30	.FUEL METER ASSY .INDICATEUR DE CARBURANT	1		1			WITH INDICATOR WITH INDICATOR
4	90157–05M19	.SCREW, PAN HEAD .VIS, TETE TRONCONIQUE	4		4			
5	6Y1–24329–00	.SEAL .JOINT	4		4			
6	6Y1–24268–01	.GASKET, FUEL METER .JOINT, JAUGE A CARBURANT	1		1			
7	6YJ–24167–00	.STRAINER .FILTRE	1		1			
8	6YL–24306–54	FUEL PIPE COMP. 1 DURITE A ESSENCE 1	1		1			AP EXCEPT FOR RUS AP EXCEPT FOR RUS

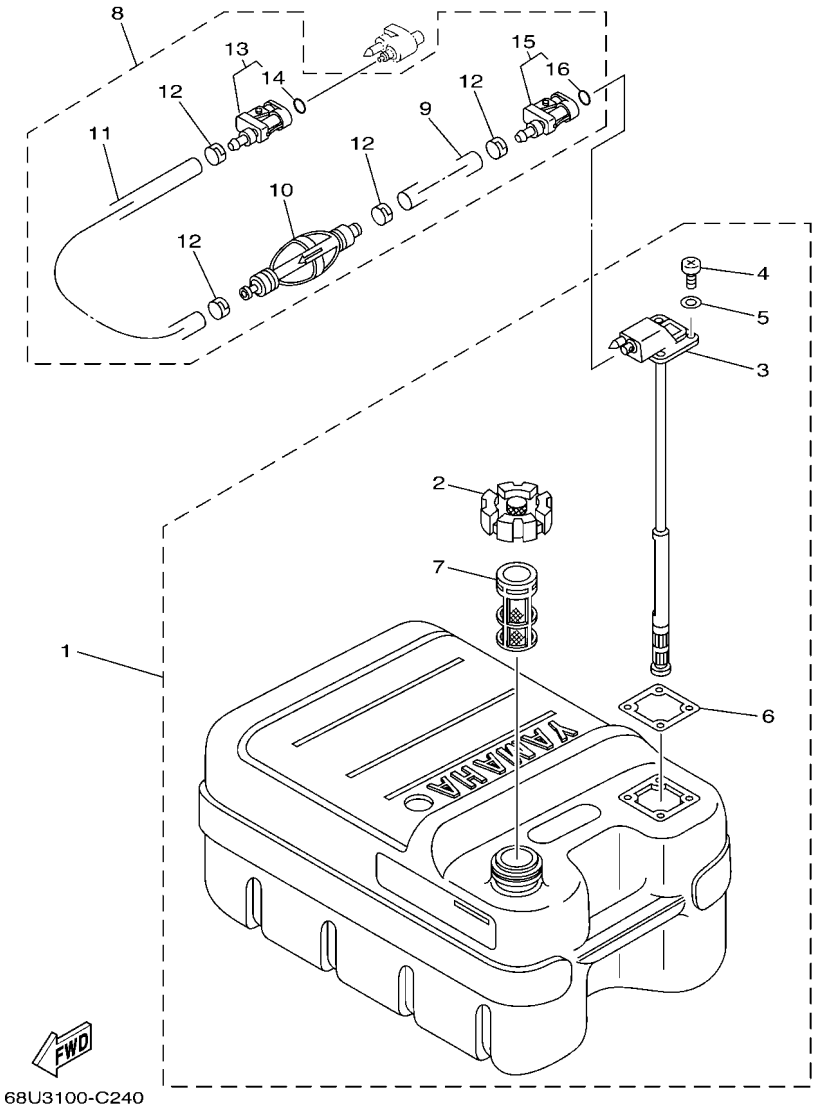

FIG. 21 FUEL TANK 2 — RESERVOIR A CARBURANT 2

REF. NO.	PART NO. N° PIECES	DESCRIPTION DESCRIPTION	6MR1	6MR2	63WP			REMARKS REMARQUES
1	6YJ–24201–21	FUEL TANK ASSY (24L) RESERVOIR A ESSENCE (ENS.):24L		1	1			AP FOR RUS AP FOR RUS
2	6YJ–24610–01	.CAP ASSY .BOUCHON		1	1			
3	6YJ–24260–11	.FUEL METER ASSY .INDICATEUR DE CARBURANT		1	1			
4	90157–05M19	.SCREW, PAN HEAD .VIS, TETE TRONCONIQUE		4	4			
5	6Y1–24329–00	.SEAL .JOINT		4	4			
6	6Y1–24268–01	.GASKET, FUEL METER .JOINT, JAUGE A CARBURANT		1	1			
7	6YJ–24167–00	.STRAINER .FILTRE		1	1			
8	61J–24306–04	FUEL PIPE COMP. 1 DURITE A ESSENCE 1		1	1			AP FOR RUS AP FOR RUS
9	90445–11M06	.HOSE (L2050) .DURITE (L2050)		1	1			
10	61J–24360–00	.PRIMER PUMP ASSY .POMPE D'AMORCAGE		1	1			
11	90445–11M05	.HOSE (L850) .DURITE (L850)		1	1			
12	650–24351–51	.BAND 1 .COLLIER 1		4	4			
13	6G1–24305–05	.FUEL PIPE JOINT COMP. 2 .DURITE RACCORDEMT. A ESSENCE		1	1			
14	93210–08287	..O-RING ..JOINT TORIQUE		1	1			
15	6Y1–24305–06	.FUEL PIPE JOINT COMP. 2 .DURITE RACCORDEMT. A ESSENCE		1	1			
16	93210–08287	..O-RING ..JOINT TORIQUE		1	1			

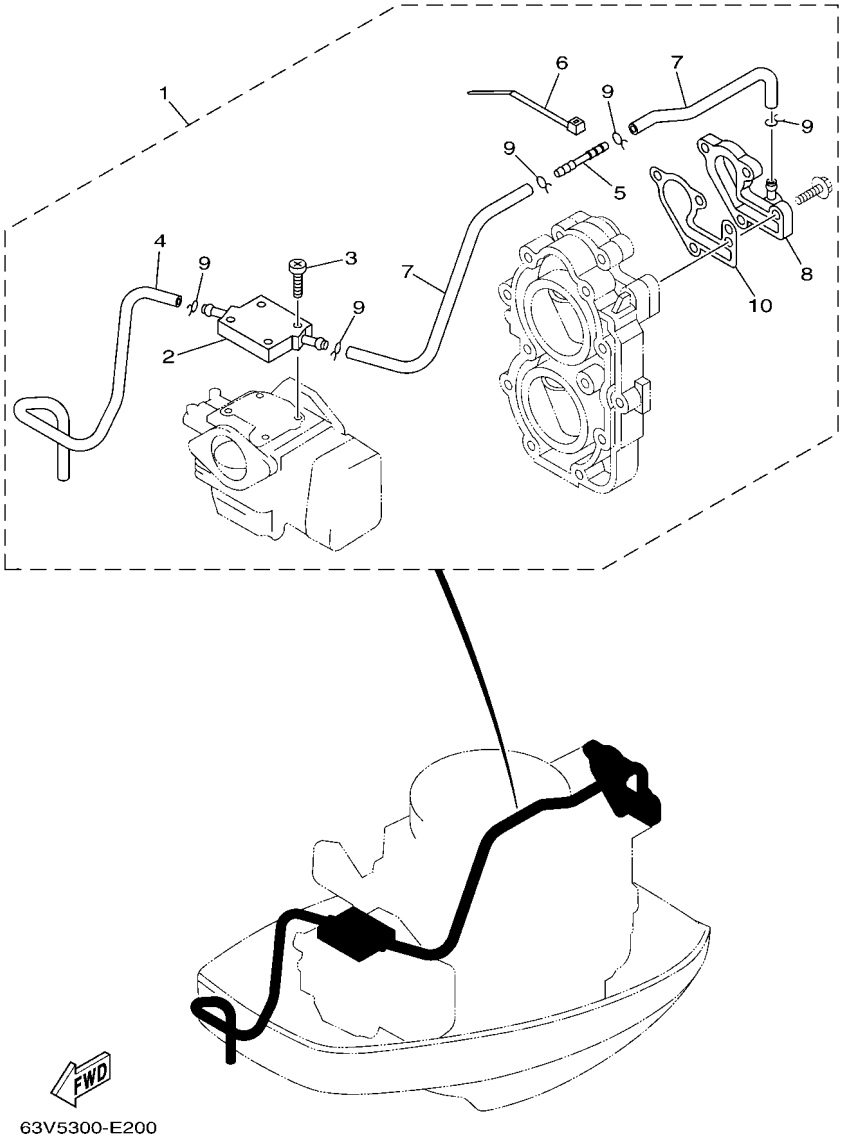

FIG. 22 OPTIONAL PARTS — PIECES OPTIONNELLES

REF. NO.	PART NO. N° PIECES	DESCRIPTION DESCRIPTION	6MR1	6MR2	63WP			REMARKS REMARQUES
1	63V–12440–51	HEAT EXCHANGER ASSY ECHANGEUR DE CHALEUR	1	1	1			
2	63V–12466–50	.EXCHANGER, HEAT .ECHANGEUR DE CHALEUR	1	1	1			
3	97885–04020	.SCREW, PAN HEAD .VIS, A ENCOCHE	4	4	4			
4	90445–09M08	.HOSE (L550) .DURITE (L550)	1	1	1			
5	6E5–83558–10	.END, NIPPLE .RACCORD DE NIPPLE	1	1	1			
6	90465–11M10	.CLAMP .BRIDE	1	1	1			
7	90445–09M54	.HOSE (L225) .DURITE (L225)	2	2	2			
8	63V–12413–50	.COVER, THERMOSTAT .COUVERCLE, THERMOSTAT	1	1	1			
9	90467–08M10	.CLIP .JONC	5	5	5			
10	682–12414–A1	.GASKET, COVER .JOINT, COUVERCLE	1	1	1			

FIG. 23 REPAIR KIT 1 — KITS DE REPARATION 1

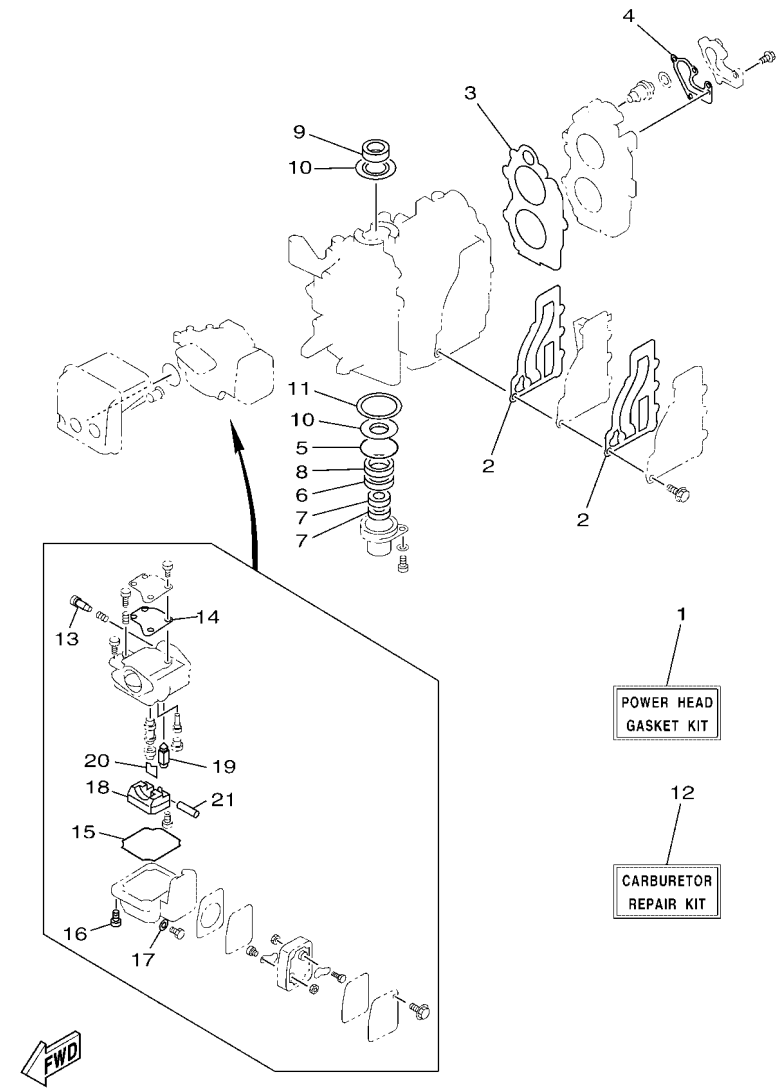

63VD700-M220

REF. NO.	PART NO. N° PIECES	DESCRIPTION DESCRIPTION	6MR1	6MR2	63WP			REMARKS REMARQUES
1	63V–W0001–02	POWER HEAD GASKET KIT POCHETTE DE JINTS TETE MOTRICE	1	1	1			
2	63V–41112–A0	.GASKET, EXHAUST INNER COVER .JOINT, PLAQUE D'ECHAPPEMENT	2	2	2			
3	63V–11181–A2	.GASKET, CYLINDER HEAD 1 .JOINT, DE CULASSE 1	1	1	1			
4	682–12414–A1	.GASKET, COVER .JOINT, COUVERCLE	1	1	1			
5	93210–46M16	.O-RING .JOINT TORIQUE	1	1	1			
6	93101–25018	.OIL SEAL .JOINT SPY	1	1	1			
7	93101–13018	.OIL SEAL .JOINT SPY	2	2	2			
8	93102–25M48	.OIL SEAL .JOINT SPY	1	1	1			
9	93110–23M00	.OIL SEAL .JOINT SPY	1	1	1			
10	63V–11445–00	.SPACER .ENTRETOISE	2	2	2			
11	90201–46M29	.WASHER, PLATE .RONDELLE, PLATE	1	1	1			
12	63V–W0093–02	CARBURETOR REPAIR KIT KIT DE REPARATION CARBURATEUR	1	1	1			
13	679–14923–01	.SCREW, PILOT .VIS, RALENTI	1	1	1			
14	63V–14126–00	.GASKET .JOINT	1	1	1			
15	63V–14984–00	.GASKET, FLOAT CHAMBER .JOINT, CUVE DE FLOTTEUR	1	1	1			
16	97980–04114	.SCREW, WITH WASHER .VIS, AVEC RONDELLE	4	4	4			
17	65W–14398–00	.GASKET .JOINT	1	1	1			
18	63V–14985–00	.FLOAT .FLOTTEUR	1	1	1			
19	6AH–14546–00	.VALVE, NEEDLE .POINTEAU	1	1	1			
20	633–14159–00	.CLIP .JONC	1	1	1			
21	6H4–14548–00	.PIN, FLOAT ARM .AXE, BRAS DE FLOTTEUR	1	1	1			

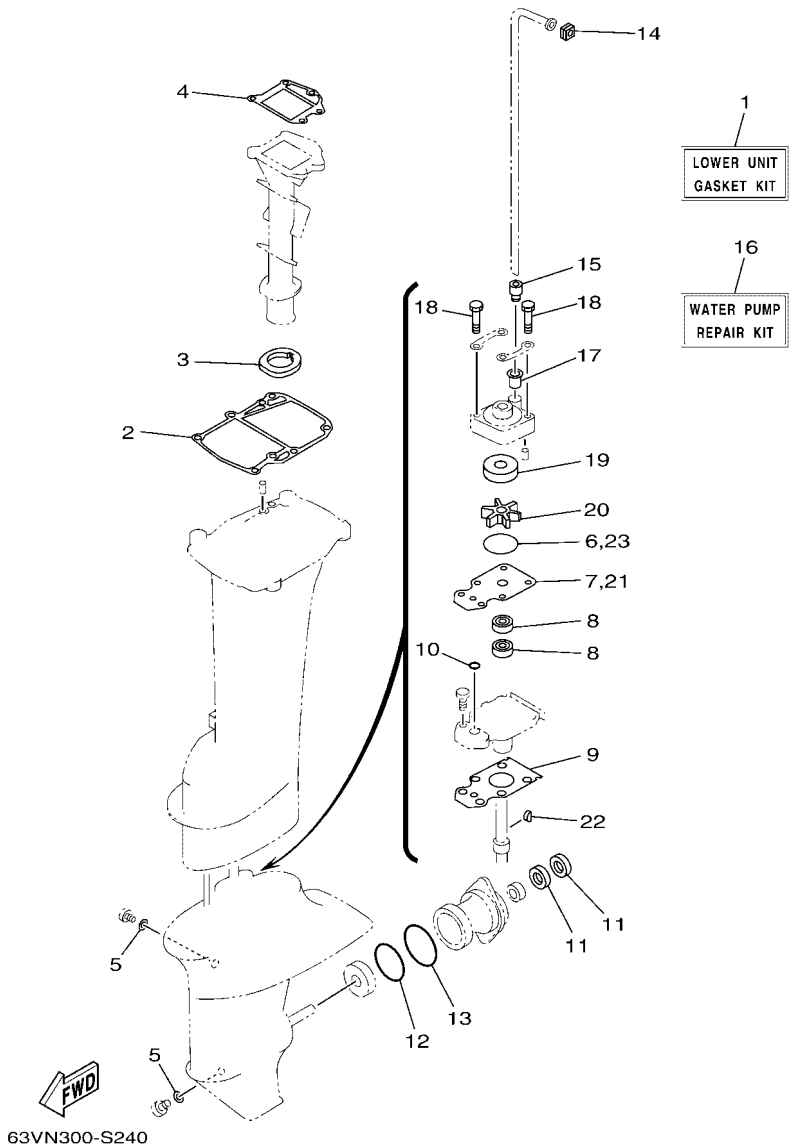

FIG. 24 REPAIR KIT 2 — KITS DE REPARATION 2

REF. NO.	PART NO. N° PIECES	DESCRIPTION DESCRIPTION	6MR1	6MR2	63WP			REMARKS REMARQUES
1	63V–W0001–23	LOWER UNIT GASKET KIT POCHETTE DE JOINTS EMBASE	1	1	1			
2	63V–45113–A1	.GASKET, UPPER CASING .JOINT, TUBE D'ARBRE	1	1	1			
3	63V–41135–01	.GASKET, EXHAUST MANIFOLD .JOINT, PIPE D'ECHAPPEMENT	1	1	1			
4	63V–41133–A1	.GASKET, EXHAUST MANIFOLD 1 .JOINT, PIPE D'ECHAPPEMENT	1	1	1			
5	90430–08003	.GASKET .JOINT	2	2	2			
6	93210–44398	.O-RING .JOINT TORIQUE	1	1	1			
7	63V–44323–00	.OUTER PLATE, CARTRIDGE .PLAQUE EXTERIEURE	1	1	1			
8	93101–20048	.OIL SEAL .JOINT SPY	2	2	2			
9	63V–45315–A0	.PACKING, LOWER CASING .JOINT, BOITIER D'HELICE	1	1	1			
10	93210–06ME6	.O-RING .JOINT TORIQUE	1	1	1			
11	93101–17054	.OIL SEAL .JOINT SPY	2	2	2			
12	93210–57M09	.O-RING .JOINT TORIQUE	1	1	1			
13	93210–56M80	.O-RING .JOINT TORIQUE	1	1	1			
14	63V–44365–11	.DAMPER, WATER SEAL 1 .JOINT, TUBE D'EAU 1	1	1	1			
15	63V–44368–01	.RUBBER, WATER SEAL 4 .CAOUTCHOUC EAU JUNTA 4	1	1	1			
16	63V–W0078–04	WATER PUMP REPAIR KIT KIT DE REPARATION DE LA POMPE	1	1	1			
17	647–44366–01	.DAMPER, WATER SEAL 2 .JOINT, TUBE D'EAU 2	1	1	1			
18	97D95–08045	.BOLT, HEXAGON DEEP RECESS .VIS HEXAGONAL	4	4	4			
19	63V–44322–00	.INSERT, CARTRIDGE .CUVETTE	1	1	1			
20	63V–44352–01	.IMPELLER .TURBINE	1	1	1			
21	63V–44323–00	.OUTER PLATE, CARTRIDGE .PLAQUE EXTERIEURE	1	1	1			
22	63V–44338–00	.KEY, WOODRUFF .CLAVETTE, VOLANT	1	1	1			
23	93210–44398	.O-RING .JOINT TORIQUE	1	1	1			

NUMERICAL INDEX
INDEX NUMERIQUE

PART NO. N° PIECES	REF. NO.
6E7–11111–01–1S	3 – 18
63V–11181–A2	3 – 19
	23 – 3
682–11325–00	1 – 1
	3 – 8
676–11372–00	3 – 15
63V–11400–02	4 – 7
63V–11412–01	4 – 8
63V–11422–01	4 – 9
63V–11432–01	4 – 10
63V–11442–01	4 – 11
63V–11445–00	4 – 27
	23 – 10
63V–11515–02	4 – 13
682–11610–01	4 – 21
682–11610–11	4 – 21
682–11610–21	4 – 21
6E7–11631–00–97	4 – 20
634–11633–00	4 – 22
6E7–11635–00	4 – 20
6E7–11636–00	4 – 20
6K4–11651–00	4 – 15
682–11681–00	4 – 14
6E5–12411–30	1 – 2
	3 – 22
688–12412–00	3 – 23
682–12413–00–1S	3 – 21
63V–12413–50	22 – 8
682–12414–A1	1 – 3
	3 – 25
	22 – 10
	23 – 4
63V–12440–51	22 – 1
63V–12466–50	22 – 2
63W–13610–00	5 – 1
63V–13610–10	5 – 1
63V–14126–00	6 – 5
	23 – 14
633–14159–00	6 – 20
	23 – 20
63V–14301–03	6 – 1
65W–14398–00	6 – 16
	23 – 17
63V–14440–A0	5 – 8
624–14485–00	3 – 3
650–14485–03	3 – 4
63V–14497–02	13 – 1
63V–14523–00	6 – 9

PART NO. N° PIECES	REF. NO.
63V–14527–00	6 – 4
6AH–14546–00	6 – 19
	23 – 19
6H4–14548–00	6 – 21
	23 – 21
697–14555–00	6 – 3
65L–14565–00	6 – 6
679–14923–01	6 – 2
	23 – 13
676–14943–29	6 – 14
63V–14947–00	6 – 13
6G1–14948–06	6 – 7
679–14966–00	6 – 8
63V–14980–02	6 – 12
63V–14984–00	6 – 11
	23 – 15
63V–14985–00	6 – 18
	23 – 18
65W–14992–09	6 – 17
63V–15100–03	3 – 2
63V–15396–01–CA	4 – 1
63V–15705–10	8 – 10
63V–15710–21	8 – 1
63V–15711–10	8 – 2
63V–15713–00	8 – 7
63V–15714–00	8 – 5
63V–15716–10	8 – 9
63V–15726–00	8 – 23
63V–15734–00	8 – 22
63V–15741–00	8 – 6
63V–15744–00	8 – 13
63V–15746–10	13 – 35
6L2–15747–00	13 – 39
63V–15748–00	8 – 21
63V–15753–00	8 – 8
6G1–15755–00	8 – 18
63V–15762–00	8 – 25
63V–15764–00	8 – 15
63V–15767–01	8 – 11
63V–15770–01	13 – 41
6G1–15779–00	8 – 19
68T–15784–00	8 – 12
63V–15793–00	8 – 16
68T–15793–00	8 – 14
63V–15794–00	8 – 20
63V–15795–01	8 – 3
6YJ–24167–00	20 – 7
	21 – 7

PART NO. N° PIECES	REF. NO.
6YJ–24201–21	21 – 1
6YJ–24201–31	20 – 1
6YJ–24260–11	21 – 3
6Y1–24260–30	20 – 3
6Y1–24268–01	20 – 6
	21 – 6
6G1–24304–10	7 – 1
6G1–24305–05	21 – 13
6Y1–24305–06	21 – 15
61J–24306–04	21 – 8
6YL–24306–54	20 – 8
6Y1–24329–00	20 – 5
	21 – 5
650–24351–51	21 – 12
61J–24360–00	21 – 10
63V–24396–01	7 – 12
63V–24411–00	6 – 27
6G1–24411–00	6 – 29
6G1–24412–01	6 – 28
6L5–24421–00	6 – 31
6G1–24431–01	6 – 30
6G1–24452–00	6 – 26
61N–24521–00	7 – 5
61N–24560–00	7 – 3
61N–24563–00	1 – 5
	7 – 4
682–24566–01	7 – 10
6YJ–24610–01	20 – 2
	21 – 2
6L2–26301–01	12 – 22
63V–28199–7M–D0	7 – 14
63V–28199–7M–E0	7 – 14
63V–28199–7M–F0	7 – 14
63V–28199–7M–G0	7 – 14
63V–28199–7M–H0	7 – 14
63V–28199–7M–S0	7 – 14
63V–28199–8N–K0	7 – 15
63V–28199–8N–L0	7 – 15
63V–28199–8N–M0	7 – 15
63V–28199–8N–N0	7 – 15
63V–28199–8N–P0	7 – 15
63V–28199–8N–R0	7 – 15
63V–41111–00–1S	3 – 12
63V–41112–A0	3 – 13
	23 – 2
63V–41113–00–1S	3 – 14
65F–41131–00–CA	17 – 7
63V–41133–A1	17 – 9

PART NO. N° PIECES	REF. NO.
63V–41133–A1	24 – 4
63V–41135–01	17 – 8
	24 – 3
63V–41211–00	13 – 18
63V–41223–00	13 – 16
6H4–41237–00	13 – 13
63V–41238–00	13 – 12
63V–41252–00	5 – 17
63V–41253–00	5 – 4
63V–41256–00	5 – 14
63V–41257–00	5 – 7
63V–41262–00	5 – 6
661–41262–02	5 – 18
	13 – 19
	13 – 40
6H4–41271–02	5 – 13
689–41273–00	5 – 15
6J8–41274–01	5 – 16
63V–41282–00	13 – 6
63V–41283–01	13 – 17
63V–41611–00	9 – 5
63V–41631–01	13 – 7
63V–41638–00	13 – 20
63V–42111–01–8D	12 – 1
664–42119–00	12 – 12
6G1–42125–01	12 – 9
6G1–42126–00	12 – 10
6G1–42131–02	12 – 6
6H2–42137–10	12 – 13
6G1–42138–01	12 – 19
63V–42154–00	14 – 10
6E0–42159–02	12 – 20
6G1–42177–01	12 – 14
63V–42192–00	14 – 14
63V–42511–04–8D	16 – 6
63V–42528–00	16 – 2
65F–42537–00	16 – 8
63V–42610–03	2 – 1
63W–42610–03	2 – 1
63V–42613–A0–8D	2 – 8
63V–42615–00	2 – 3
63V–4261A–01	2 – 2
6L2–42647–00	2 – 6
6G1–42651–02	2 – 4
63V–42675–41	2 – 10
63V–42676–41	2 – 11
63W–42678–40	2 – 12
63V–42678–41	2 – 12

PART NO. N° PIECES	REF. NO.
6E0–42681–41	2 – 13
	2 – 14
63V–42711–03–8D	11 – 1
63V–42716–02	11 – 17
682–42725–02	11 – 2
63V–42726–01	11 – 3
682–42727–01	11 – 4
63V–42731–00–8D	15 – 12
6G1–42748–01	11 – 5
6EE–42794–40	11 – 20
6EE–42794–50	11 – 21
63V–42815–01–8D	11 – 7
6E7–42816–00	11 – 8
63V–43111–07–8D	15 – 1
63V–43112–08–8D	15 – 2
6J8–43113–01	15 – 19
648–43114–01	15 – 7
6E7–43116–00	15 – 6
6E0–43118–01	15 – 4
69A–43131–00	15 – 8
689–43160–00	15 – 25
689–43165–00	15 – 26
63V–43181–00	15 – 50
63V–43191–00	15 – 32
63V–43311–03–8D	15 – 29
682–43318–01	15 – 31
66M–43350–01	15 – 36
689–43373–02	16 – 3
66R–43611–00	15 – 44
63V–43614–10	15 – 41
66R–43615–00	15 – 43
66R–43617–00	15 – 48
66M–43630–01	15 – 30
63V–43641–01	15 – 38
63V–43656–00	15 – 49
63V–43659–00	15 – 46
63V–43676–01	15 – 13
63V–44111–02	12 – 23
63V–44116–00	13 – 29
63V–44121–01	13 – 24
63V–44122–01	13 – 30
63V–44123–02	13 – 23
63V–44124–02	12 – 28
63V–44125–00	13 – 26
63V–44143–01	13 – 32
61N–44146–00	13 – 34
63V–44150–00	18 – 27
63V–44150–10	18 – 27

PART NO. N° PIECES	REF. NO.
6X3–44191–00	12 – 27
688–44194–00	13 – 11
689–44194–01	13 – 2
63V–44301–00	18 – 11
63V–44322–00	18 – 12
	24 – 19
63V–44323–00	18 – 17
	24 – 7
	24 – 21
63V–44328–01	18 – 20
63V–44338–00	18 – 15
	24 – 22
63V–44352–01	18 – 14
	24 – 20
63V–44361–01	19 – 3
63V–44361–11	19 – 3
63V–44362–00	19 – 23
63V–44365–11	19 – 1
	24 – 14
647–44366–01	18 – 13
	24 – 17
63V–44366–02	16 – 17
63V–44368–01	19 – 2
	24 – 15
63V–44375–01	19 – 24
63V–44376–01	19 – 25
6BL–44391–00	11 – 18
63V–44514–01–CA	16 – 13
63V–44526–00	16 – 14
63V–44551–01–8D	16 – 20
682–44555–00	16 – 22
63V–44557–01	16 – 21
63V–45111–05–8D	17 – 1
63V–45111–15–8D	17 – 1
63V–45113–A1	17 – 5
	24 – 2
63V–45114–A1	16 – 18
63V–45126–01	17 – 2
6G1–45214–00	19 – 6
63V–45215–00	19 – 7
61N–45251–01	1 – 8
	19 – 10
63V–45300–05–8D	18 – 1
63V–45300–15–8D	18 – 1
63V–45311–01–8D	18 – 2
63V–45315–A0	18 – 24
	24 – 9
626–45316–09	18 – 22

NUMERICAL INDEX
INDEX NUMERIQUE

PART NO. N° PIECES	REF. NO.
682–45318–00	17 – 11
63V–45331–00–CA	18 – 21
683–45361–02–8D	18 – 41
63V–45375–00	19 – 13
63V–45510–01	18 – 28
63V–45510–11	18 – 28
63V–45536–00	18 – 4
63V–45551–00	18 – 29
6E7–45560–01	18 – 31
664–45567–01	18 – 48
664–45567–10	18 – 48
664–45567–20	18 – 48
664–45567–30	18 – 48
664–45567–40	18 – 48
664–45567–50	18 – 48
664–45567–60	18 – 48
6E7–45571–00	18 – 32
626–45577–00	18 – 33
626–45577–10	18 – 33
626–45577–20	18 – 33
626–45577–30	18 – 33
626–45577–40	18 – 33
6E8–45587–10	18 – 7
6E8–45587–30	18 – 7
683–45611–00	18 – 35
682–45631–00	18 – 37
648–45633–11	18 – 39
650–45635–00	18 – 36
683–45941–00	19 – 18
683–45943–00	19 – 18
63V–45943–10	19 – 18
683–45945–00	19 – 18
63V–45945–10	19 – 18
63V–45947–00	19 – 18
683–45947–00	19 – 18
683–45949–00	19 – 18
683–45952–00	19 – 18
63V–45952–10	19 – 18
6E7–45986–00	19 – 20
6E7–45987–01	19 – 14
6FM–48344–00	14 – 7
63V–48501–00	14 – 1
63V–48511–01	14 – 22
63V–48531–00	14 – 2
63V–48534–00	14 – 17
682–48538–50	14 – 3
63V–48544–00	14 – 19
6J8–81960–00	10 – 14
6EE–81994–40	8 – 29
6EE–81994–50	8 – 30
6EE–81995–40	8 – 27
6EE–81995–50	8 – 28
63V–82127–00	16 – 5
6E3–82370–21	10 – 8
662–82519–00	10 – 11
682–82556–00	12 – 32
65W–82575–01	12 – 31
689–8257Y–00	12 – 33
6E5–83558–10	22 – 5
682–84381–00	10 – 13
63V–85520–01	9 – 3
63V–85533–00	9 – 4
63V–85540–03	10 – 1
63V–85550–11	9 – 1
63V–85570–10	10 – 5
63V–85580–01	9 – 2
63V–W0001–02	23 – 1
63V–W0001–23	24 – 1
682–W0004–00	5 – 2
63V–W0078–04	1 – 9
	24 – 16
63V–W0090–04–1S	3 – 1
63V–W0093–02	23 – 12
656–W2810–03	7 – 13
683–W4591–02	19 – 19
683–W4592–02	19 – 19
90101–06M29	15 – 22
90105–06M07	16 – 4
90105–06M68	9 – 7
90105–06M69	9 – 9
90105–07M05	3 – 20
90109–06M84	15 – 51
90116–08016	12 – 7
90116–08M54	16 – 12
90119–06308	5 – 12
90119–06M05	12 – 24
90119–06MA2	3 – 26
90119–06MA4	3 – 17
90119–08M07	3 – 11
90152–05011	12 – 15
	19 – 8
90157–05014	15 – 39
90157–05M19	20 – 4
	21 – 4
90157–06M06	17 – 3
90159–05M25	13 – 25
90159–05M25	13 – 27
	13 – 31
	14 – 20
90164–05M03	5 – 20
90170–12066	9 – 11
90171–10M01	19 – 16
90171–10M07	19 – 21
90179–06M28	16 – 25
90179–08M06	18 – 30
90185–05002	19 – 9
90185–08057	12 – 8
	14 – 24
90185–22043	15 – 20
90201–04M06	14 – 15
90201–05M09	5 – 19
90201–06068	11 – 11
90201–08M12	14 – 9
90201–10M01	19 – 15
90201–10M02	12 – 16
	14 – 13
	19 – 22
90201–12472	9 – 12
90201–14377	4 – 24
90201–15017	18 – 6
90201–16M03	3 – 24
90201–17682	18 – 34
90201–46M29	4 – 28
	23 – 11
90202–06009	12 – 29
90202–07M60	15 – 33
90202–22M54	15 – 9
90202–36M55	12 – 4
90206–08010	15 – 16
90206–10M04	14 – 12
90206–12052	11 – 10
90206–15M18	12 – 26
90206–36M21	12 – 3
90209–14011	18 – 5
90209–20M23	4 – 17
90209–40008	16 – 7
90243–04M01	15 – 5
90250–05010	18 – 38
90266–04M04	2 – 5
	2 – 7
90269–07015	15 – 3
90280–05013	9 – 10
90340–08002	18 – 9
90386–07M95	15 – 35
90386–08032	12 – 18
90386–10009	14 – 21
90386–10025	14 – 11
90386–12M45	11 – 9
90386–22M69	15 – 11
90386–22M94	15 – 10
	15 – 11
90386–30048	16 – 9
90386–30M60	16 – 11
90386–33M96	12 – 5
90386–34M97	12 – 2
90387–06M05	8 – 4
90387–06M06	13 – 36
90387–06M13	15 – 21
90387–06M15	5 – 9
90387–06M24	9 – 8
90387–06M50	13 – 3
90387–06M52	11 – 15
90387–06M53	9 – 6
90387–06M75	15 – 15
90387–06M86	12 – 25
90387–07M07	15 – 34
90387–16002	16 – 16
90430–08003	1 – 7
	18 – 10
	24 – 5
90445–07M08	3 – 5
	3 – 6
90445–09104	3 – 16
90445–09M00	7 – 8
90445–09M08	22 – 4
90445–09M54	22 – 7
90445–11M05	21 – 11
90445–11M06	21 – 9
90464–08M02	10 – 9
90464–15M11	10 – 3
90465–08M61	10 – 4
90465–11M10	22 – 6
90465–25M57	11 – 19
90467–06016	3 – 7
90467–08004	7 – 9
90467–08M10	22 – 9
90468–10005	13 – 15
90468–18008	12 – 30
	14 – 8
90480–06M19	11 – 6
90480–10M16	13 – 42
90480–12M25	5 – 10
90480–15M31	11 – 16
90480–25161	10 – 7
90501–10326	6 – 10
90501–12M16	13 – 10
90501–14M06	18 – 40
90501–23215	12 – 17
90502–10M07	15 – 28
90507–20M00	15 – 37
90508–08M39	13 – 37
90508–16M37	13 – 21
90508–18M41	15 – 42
90508–20M38	13 – 22
91490–16010	12 – 11
91490–16018	8 – 24
91490–20010	14 – 16
91490–30025	19 – 17
91609–20008	4 – 18
91690–20010	5 – 5
91690–30008	15 – 27
91690–30012	14 – 4
92990–06300	19 – 12
92995–06600	15 – 23
93101–13018	4 – 5
	23 – 7
93101–17054	18 – 44
	24 – 11
93101–20048	18 – 23
	24 – 8
93101–25018	4 – 3
	23 – 6
93102–25M48	4 – 4
	23 – 8
93110–23M00	4 – 26
	23 – 9
93210–06ME6	18 – 25
	24 – 10
93210–08287	21 – 14
	21 – 16
93210–20M65	15 – 14
93210–29M94	16 – 10
93210–32738	1 – 6
	7 – 6
93210–35M86	5 – 11
93210–44398	18 – 16
	24 – 6
	24 – 23
93210–46M16	4 – 2
	23 – 5
93210–56M80	18 – 46
	24 – 13
93210–57M09	18 – 45
	24 – 12
93306–00501	18 – 42
93306–205U7	4 – 12
93310–620V5	4 – 16
93315–314V8	18 – 3
93315–317U2	18 – 43
93332–00005	18 – 8
93420–30042	17 – 12
93430–04M03	15 – 45
93440–52009	4 – 19
93450–15023	4 – 25
93602–14104	4 – 23
93604–12M07	18 – 18
	19 – 4
93606–12019	3 – 10
	17 – 4
93700–06M03	16 – 1
94702–00217	1 – 4
94702–00271	1 – 4
	3 – 27
95380–03600	6 – 24
95380–05700	13 – 14
95380–06600	13 – 9
	14 – 6
95380–06700	11 – 13
	13 – 33
	15 – 24
95380–08600	7 – 7
	16 – 15
95780–06300	15 – 18
95780–08300	14 – 18
95D95–06012	13 – 28
95D95–06030	19 – 11
95D95–06065	13 – 4
97013–06010	7 – 11
97080–08025	18 – 26
97595–06516	14 – 5
97885–04020	22 – 3
97885–05012	12 – 21
97885–06025	15 – 17
97885–06030	13 – 8
97980–04114	6 – 15
	23 – 16
97980–04123	6 – 25
97D95–06025	11 – 12

PART NO. N° PIECES	REF. NO.
97D95–08045	18 – 19
	24 – 18
97E75–06555	16 – 23
97E75–06575	16 – 24
97E75–08530	17 – 6
	19 – 5
97E75–08535	14 – 23
97E95–06512	10 – 10
	10 – 12
	13 – 5
97E95–06516	2 – 9
	4 – 6
	10 – 15
97E95–06518	10 – 6
	16 – 19
97E95–06520	5 – 3
	7 – 2
	8 – 26
	10 – 2
	13 – 38
	17 – 10
	18 – 47
97E95–06525	11 – 14
98580–04006	6 – 32
98580–04008	6 – 22
98780–05015	3 – 9
98980–03006	6 – 23
99080–05600	15 – 40
	15 – 47