YAMAHA

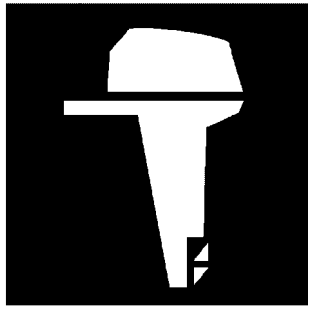

PARTS CATALOGUE
CATALOGUE DE PIECES DETACHEES

F40H'23 (6AKK)
F50H'23 (6C1L)
F60F'23 (6C5L)

YAMAHA
GENUINE
Parts & Accessories

1X6C1-300FA

( )

F40H
F50H/F60F
PARTS CATALOGUE
©2023 by Yamaha Motor Co., Ltd.
1st edition, April 2023
All rights reserved.
Any reprinting or unauthorized use
without the written permission of
Yamaha Motor Co., Ltd.
is expressly prohibited.
Printed in Japan.

F40H
F50H/F60F
CATALOGUE DE PIECES DETACHEES
©2023 par Yamaha Motor Co., Ltd.
1re édition, avril 2023
Tous droits réservés
Toute réimpression ou utilisation
non autorisée sans la permission écrite
de la Yamaha Motor Co., Ltd.
est formellement interdite.
Imprimé au Japon

FOREWORD

This Parts Catalogue is related to the parts for the model(s) on the cover page. When you are ordering replacement parts, please refer to this Parts Catalogue and quote both part numbers and part names correctly.

1. Modifications or additions which have been made after the issue of the Parts Catalogue will be announced in the Parts News.
   It is advisable that you make the necessary corrections to the Parts Catalogue according to the Parts News.

2. Abbreviations
   The following abbreviations are used in this Parts Catalogue.
   "UR" Use specified parts number.
   "UN" Use as many as needed.
   "AP" Alternate Parts
   "LM" Locally Made (Parts need to be ordered locally)
   "F#" Frame No. (Applicable machine No.)
   "O/S" Over Size

3. The number of components for assembly
   - Parts, which are to be supplied in an assembly, are listed with a dot (.) in front of the part name as shown below.
   - The numeral appearing to the right of each component part indicates the quantity of parts for each assembly unit.

PART NO.	DESCRIPTION	Q'TY	REMARKS
2F5–83310–60	FRONT FLASHER LIGHT ASSY	2	
115–83311–60	.BULB (6V–18W)	1	

4. Applicable colours of graphics are represented in the "REMARKS" as shown below.

PART NO.	DESCRIPTION	Q'TY	REMARKS
2N4–24110–00–X5	FUEL TANK COMP.	2	MXR
3J1–24240–10	.GRAPHIC, FUEL TANK	1	FOR MXR

5. Note that the illustrations for reference in finding parts numbers are not to be used for assembling. When assembling, please use the applicable service manual.

6. The asterisk (*) before a reference number indicates modified items after the first edition.

7. Applicable Serial No.
   Engine Serial No.

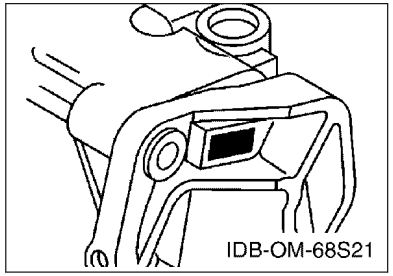

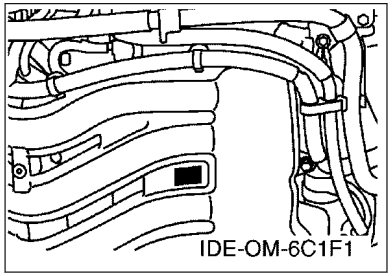

8. Applicable Engine Starting Serial No.

Model	Serial No.	Model	Serial No.
F40H	6AK-1023195	F50H	6C1-1105886
F60F	6C5-1112950		

9. Applicable Colour Code

Abbreviation	Colour Name	Colour Code
DBN1	DARK BLUISH GRAY 1	008D

10. Quantity Column Information

Column No.	Name Of Q'ty Column	Applicable Model
1	ED	F50HED
2	ET	F40HET,F50HET,F60FET

AVANT–PROPOS

Ce catalogue de pièces détachées concerne les pièces pour le(s) modèle(s) indiqué(s) sur la page de couverture. Lorsque vous commandez des pièces de rechange, veuillez vous référer à ce catalogue de pieces détachées et indiquer clairement les numéros et les noms des pièces détachées.

1. Les modifications ou ajouts ayant été effectués après la parution du catalogue de pièces détachées seront décrits dans les Bulletins d'information concernant les pièces détachées.
   Il est recommandé que vous apportiez les corrections nécessaires au catalogue des pièces détachées en vous référant aux Bulletins d'information.

2. Abréviations
   Dans ce catalogue, les abréviations suivantes sont utilisées:
   "UR" Utiliser le numéro de pièces spécifié.
   "UN" Utiliser autant que nécessaire.
   "AP" Pièces de substitution
   "LM" Fabrication locale (les pièces doivent être commandées localement.)
   "F#" N° de cadre (applicable au N° de série)
   "O/S" Surdimensionné

3. Nombre de pièces d'un assemblage
   - Les pièces fournies comme composants d'un assemblage sont précédées d'un point (.) de la manière indiquée ci–dessous.
   - Le chiffre apparaissant à la droite de chaque composant indique la quantité de pièces pour chaque unité d'assemblage.

N° PIECES	DESCRIPTION	QTE	REMARQUES
2F5–83310–60	ENS. CLIGNOTANT AVANT	2	
115–83311–60	.AMPOULE (6V–18W)	1	

4. Les couleurs concernant les graphiques sont indiquées dans la colonne "REMARQUES", comme indiqué ci–dessous.

N° PIECES	DESCRIPTION	QTE	REMARQUES
2N4–24110–00–X5	RESERVOIR A ESSENCE.	2	MXR
3J1–24240–10	.GRAPHIQUE	1	POUR MXR

5. Veuillez noter que les illustrations sont indiquées à titre de référence pour trouver les numéros de pièces, non pour être utilisées lors de l'assemblage. Lors de l'assemblage, veuillez utiliser le manuel d'entretien adéquat.

6. L'astérisque (*) placé devant un numéro de référence indique des éléments qui ont été modifiés après la première édition.

7. N° de série applicable
   N° de Série du moteur

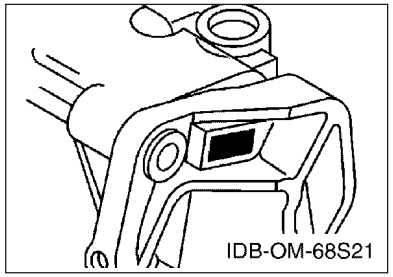

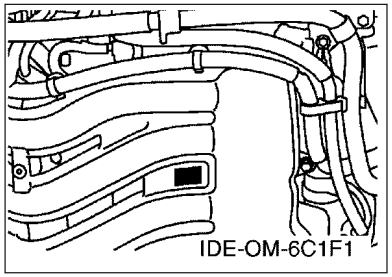

8. N° de série initial du moteur applicable

Modèle	N° de série	Modèle	N° de série
F40H	6AK-1023195	F50H	6C1-1105886
F60F	6C5-1112950		

9. Code couleur applicable

Abréviation	Nom de la couleur	Code couleur
DBN1	DARK BLUISH GRAY 1	008D

10. Informations relatives à la colonne Quantité

N° de la colonne	Nom de la colonne Qté	Modèle applicable
1	ED	F50HED
2	ET	F40HET,F50HET,F60FET

CONTENTS

SCHEDULED SERVICE PARTS.....1
TOP COWLING.....2
CYLINDER & CRANKCASE 1.....3
CRANKSHAFT & PISTON.....5
CYLINDER & CRANKCASE 2.....6
VALVE.....8
INTAKE 1.....9
INTAKE 2.....10
FUEL INJECTION PUMP 1.....11
FUEL INJECTION PUMP 2.....12
OIL PUMP.....13
FUEL.....14
GENERATOR.....16
ELECTRICAL 1.....17
ELECTRICAL 2.....18
ELECTRICAL 3.....20
ELECTRICAL 4.....22
STARTING MOTOR.....23
BOTTOM COWLING 1.....24
BOTTOM COWLING 2.....26
CONTROL.....27
BRACKET 1.....29
BRACKET 2.....31
BRACKET 3.....33
POWER TRIM & TILT ASSY 1.....35
POWER TRIM & TILT ASSY 2.....38
UPPER CASING.....39
OIL PAN.....40
LOWER CASING & DRIVE 1.....41
LOWER CASING & DRIVE 2.....44
FUEL TANK.....45
STEERING GUIDE.....46
OPTIONAL PARTS 1.....47
OPTIONAL PARTS 2.....48
REPAIR KIT 1.....49
REPAIR KIT 2.....50

INDEX

NUMERICAL INDEX.....52

TABLE DES MATIERES

PIECES MAINTENANCE PERIODIQUE.....1
CAPOT SUPERIEUR..... 2
CYLINDRE & CARTER 1..... 3
VILEBREQUIN & PISTON.....5
CYLINDRE & CARTER 2..... 6
SOUPAPE..... 8
ADMISSION 1.....9
ADMISSION 2.....10
POMPE A INJECTEUR 1..... 11
POMPE A INJECTEUR 2..... 12
POMPE A HUILE.....13
CARBURANT..... 14
GENERATRICE.....16
PARTIE ELECTRIQUE 1.....17
PARTIE ELECTRIQUE 2.....18
PARTIE ELECTRIQUE 3.....20
PARTIE ELECTRIQUE 4.....22
DEMARREUR ELECTRIQUE.....23
CAPOT INFERIEUR 1.....24
CAPOT INFERIEUR 2.....26
COMMANDE..... 27
SUPPORT 1..... 29
SUPPORT 2..... 31
SUPPORT 3..... 33
PUISSANCE PARER ET INCLINER 1..... 35
PUISSANCE PARER ET INCLINER 2..... 38
FOURREAU.....39
VENTILATEUR D'HUILE..... 40
BOITIER D'HELICE TRANSMISSION1.....41
BOITIER D'HELICE TRANSMISSION2.....44
RESERVOIR A CARBURANT.....45
FIXATION DE DIRECTION..... 46
PIECES OPTIONNELLES 1.....47
PIECES OPTIONNELLES 2.....48
KITS DE REPARATION 1..... 49
KITS DE REPARATION 2..... 50

INDEX

INDEX NUMERIQUE.....52

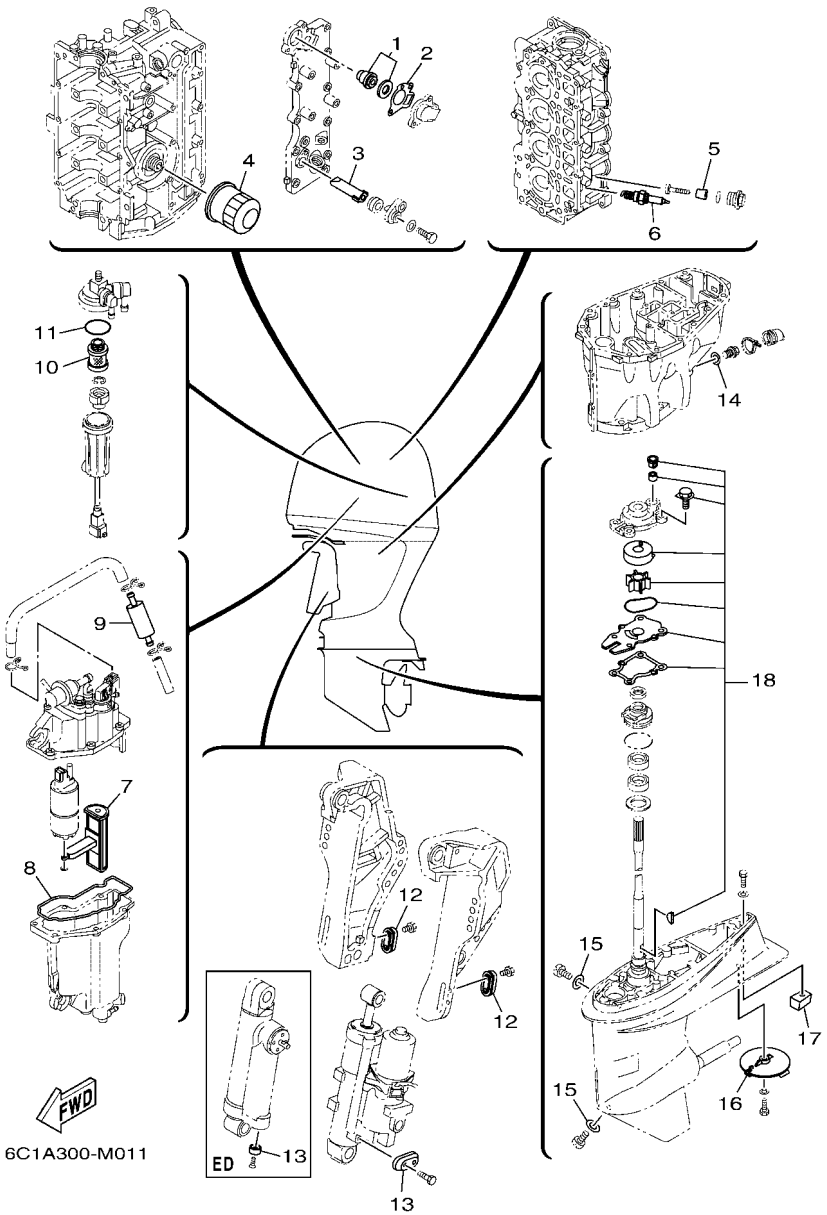

FIG. 1 SCHEDULED SERVICE PARTS — PIECES MAINTENANCE PERIODIQUE

REF. NO.	PART NO. N° PIECES	DESCRIPTION DESCRIPTION	ED	ET				REMARKS REMARQUES
1	6G8–12411–03	THERMOSTAT THERMOSTAT	1	1				
2	62Y–12414–00	GASKET, COVER JOINT, COUVERCLE	1	1				
3	62Y–11325–00	ANODE ANODE	1	1				
4	5GH–13440–80	ELEMENT ASSY, OIL CLEANER ELEMENT, FILTRE A HUILE	1	1				
5	6G8–11325–00	ANODE ANODE	4	4				
6	94702–00418	PLUG, SPARK (NGK DPR6EB-9) BOUGIE D,ALLUMAGE (NGK DPR6EB-	4	4				
7	6C5–13915–00	FILTER FILTRE	1	1				
8	6C5–14984–10	GASKET, FLOAT CHAMBER JOINT, CUVE DE FLOTTEUR	1	1				
9	6C5–24251–00	STRAINER 1 FILTRE 1	1	1				
10	6D8–24563–00	ELEMENT, FILTER ELEMENT, FILTRE	1	1				
11	6D8–24564–00	GASKET JOINT	1	1				
12	65W–45251–00	ANODE ANODE	2	2				
13	663–45251–00	ANODE ANODE	1					
	65W–45251–00	ANODE ANODE		1				
14	90430–14M09	GASKET JOINT	1	1				
15	90430–08003	GASKET JOINT	2	2				
16	67C–45371–00	TAB-TRIM ANODE DERIVE	1	1				
17	67C–45251–00	ANODE ANODE	1	1				
18	63D–W0078–03	WATER PUMP REPAIR KIT KIT DE REPARATION DE LA POMPE	1	1				

FIG. 2 TOP COWLING — CAPOT SUPERIEUR

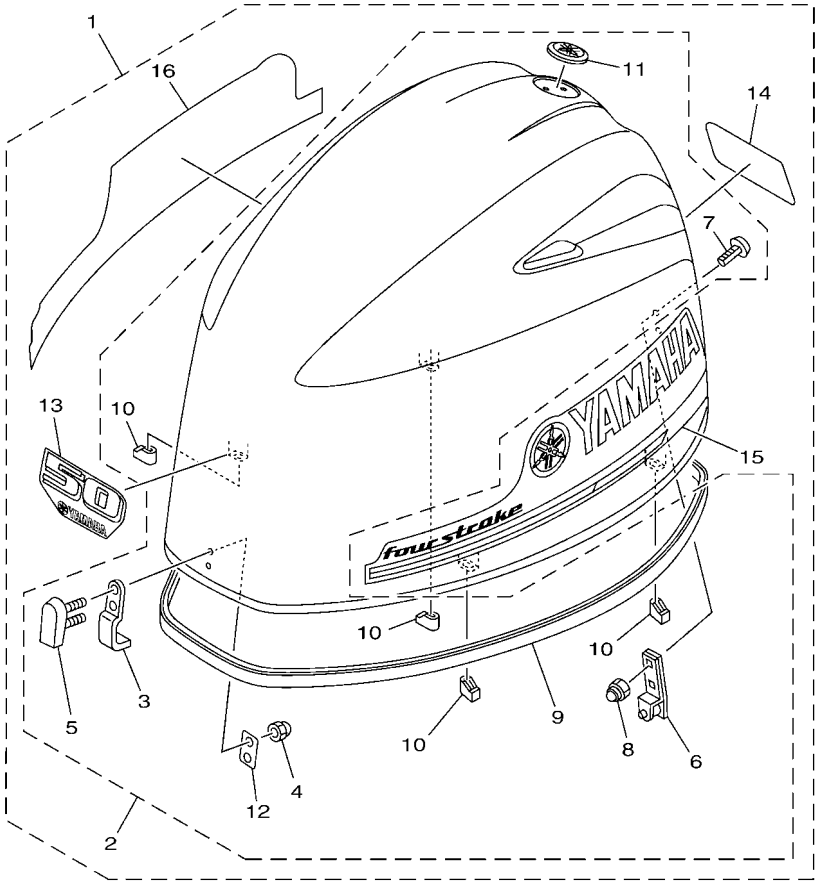

6C1E100-R020

REF. NO.	PART NO. N° PIECES	DESCRIPTION DESCRIPTION	ED	ET				REMARKS REMARQUES
1	6C1–42610–32	TOP COWLING ASSY CAPOT (ENS.)	1	1				F50H F50H
	6C5–42610–52	TOP COWLING ASSY CAPOT (ENS.)		1				F60F F60F
	6CY–42610–03	TOP COWLING ASSY CAPOT (ENS.)		1				F40H F40H
2	6CJ–4261A–01	.TOP COWLING W/O GRAPHICS .CAPOT SUPERIEUR SANS GRAPHIQUE	1	1				
3	6BG–42651–00	..HOOK ..CROCHET	1	1				
4	95380–05800	..NUT ..ECROU	2	2				
5	6BG–42851–00	..COVER, CLAMP ..COUVERCLE, BRIDE	1	1				
6	6BG–42652–00	..HOOK ..CROCHET	1	1				
7	90109–06047	..BOLT ..BOULON	2	2				
8	90185–06M05	..NUT, SELF-LOCKING ..ECROU,AUTO-BLOQUANT	2	2				
9	6CJ–42615–00	..SEAL ..JOINT	1	1				
10	6BG–42662–01	..DAMPER ..AMORTISSEUR	4	4				
11	6AH–42697–10	..TUNING FORK MARK ..MARQUE, YAMAHA	1	1				
12	6BG–42649–00	..HOLDER, CLAMP BAND ..SUPPORT, SANDOW DE SERRAGE	1	1				
13	60A–42677–00	.GRAPHIC, FRONT .ADHESIF, AVANT	1	1				F50H F50H
	6C5–42677–10	.GRAPHIC, FRONT .ADHESIF, AVANT		1				F60F F60F
	6BG–42677–00	.GRAPHIC, FRONT .ADHESIF, AVANT		1				F40H F40H
14	60A–42678–10	.GRAPHIC, REAR .ADHESIF, ARRIERE	1	1				F50H F50H
	6C5–42678–50	.GRAPHIC, REAR .ADHESIF, ARRIERE		1				F60F F60F
	6BG–42678–20	.GRAPHIC, REAR .ADHESIF, ARRIERE		1				F40H F40H
15	6CJ–42675–00	.GRAPHIC, SIDE 1 .EMBLEME	1	1				
16	6CJ–42676–00	.GRAPHIC, SIDE 2 .EMBLEME	1	1				

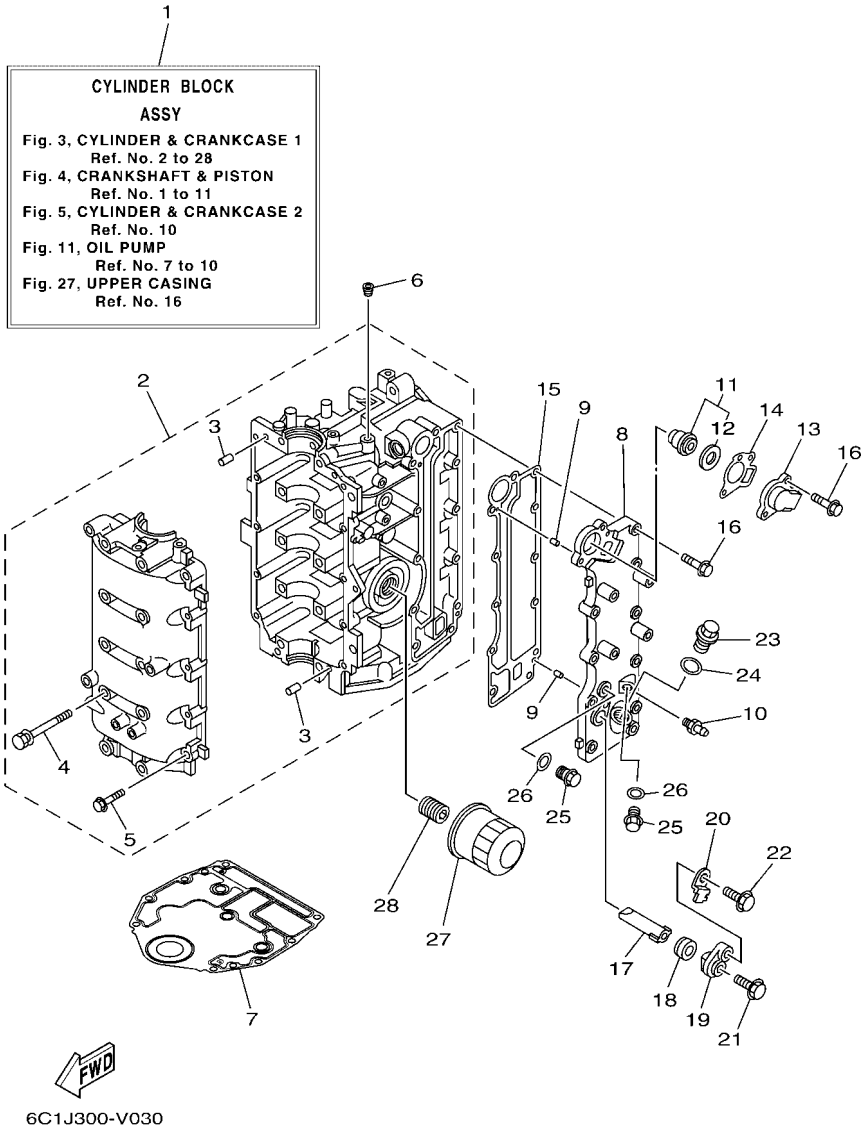

FIG. 3 CYLINDER & CRANKCASE 1 — CYLINDRE & CARTER 1

REF. NO.	PART NO. N° PIECES	DESCRIPTION DESCRIPTION	ED	ET				REMARKS REMARQUES
1	6C5–W009B–07–9S	CYLINDER BLOCK ASSY CYLINDRE GROUPE (ENS.)	1	1				
2	6C5–15100–12	CRANKCASE ASSY CARTER DE MOTEUR COMPLET	1	1				
3	93606–12019	.PIN, DOWEL .GOUPILLE	4	4				
4	90119–08154	.BOLT, WITH WASHER .BOULON, AVEC RONDELLE	10	10				
5	97513–06535	.BOLT, WITH WASHER .VIS HEXAGONAL AVC RONDELLE	10	10				
6	90344–51003	PLUG, TAPER SCREW PLOT, FILETE CONIQUE	1	1				
7	6BG–11351–01	GASKET, CYLINDER JOINT, D'EMBASE	1	1				
8	6C5–41113–11–9S	OUTER COVER, EXHAUST COUVERCLE, ECHAPPEMENT	1	1				
9	93604–10M03	PIN, DOWEL CLAVETTE	2	2				
10	62Y–12481–10	PIPE 1 DURITE 1	1	1				
11	6G8–12411–03	THERMOSTAT THERMOSTAT	1	1				
12	688–12412–00	.SEAL, THERMOSTAT .JOINT, THERMOSTAT	1	1				
13	6C5–12413–00–9S	COVER, THERMOSTAT COUVERCLE, THERMOSTAT	1	1				
14	62Y–12414–00	GASKET, COVER JOINT, COUVERCLE	1	1				
15	6C5–41114–10	GASKET, EXHAUST OUTER COVER JOINT, COUVERCLE D'ECHAPPEMENT	1	1				
16	90119–06MA5	BOLT, WITH WASHER BOULON, AVEC RONDELLE	12	12				
17	62Y–11325–00	ANODE ANODE	1	1				
18	66M–11328–01	GROMMET, ANODE PASSE-FIL	1	1				
19	66M–11327–00–94	COVER, ANODE COUVERCLE ANODE	1	1				
20	66M–12535–00	PLATE PLAQUE	1	1				
21	97595–05512	BOLT, WITH WASHER VIS HEXAGONAL AVC RONDELLE	1	1				
22	97E95–06520	BOLT, HEXAGON W/W DEEP RECESS VIS HEXAGONAL AVC RONDELLE	1	1				
23	90340–18M09	PLUG, STRAIGHT SCREW PLOT, FILETE DROIT	1	1				
24	90201–186F1	WASHER, PLATE RONDELLE, PLATE	1	1				
25	90340–14M06	PLUG, STRAIGHT SCREW PLOT, FILETE DROIT	2	2				
26	90430–14115	GASKET JOINT	2	2				
27	5GH–13440–80	ELEMENT ASSY, OIL CLEANER ELEMENT, FILTRE A HUILE	1	1				

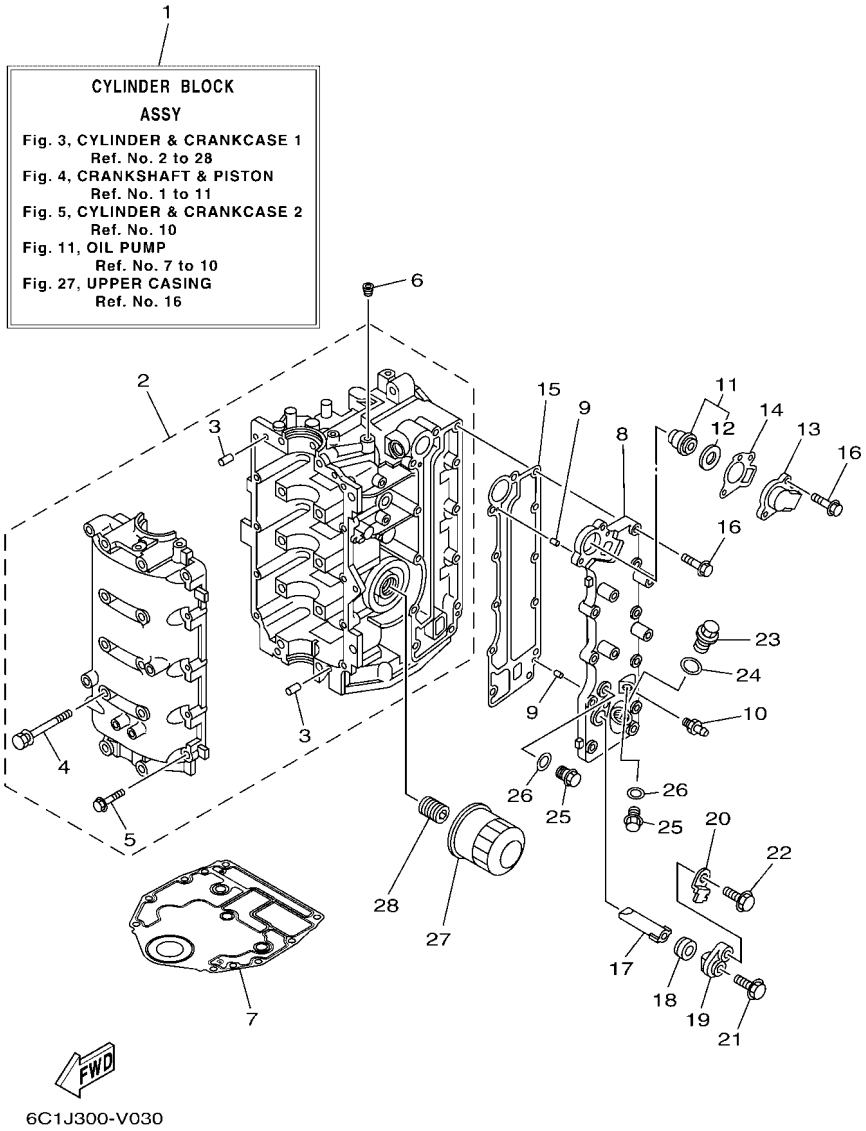

FIG. 3 CYLINDER & CRANKCASE 1 — CYLINDRE & CARTER 1

REF. NO.	PART NO. N° PIECES	DESCRIPTION DESCRIPTION	ED	ET				REMARKS REMARQUES
28	6C5–12858–A0	BOLT, UNION BOULON, RACCORD	1	1				

FIG. 4 CRANKSHAFT & PISTON — VILEBREQUIN & PISTON

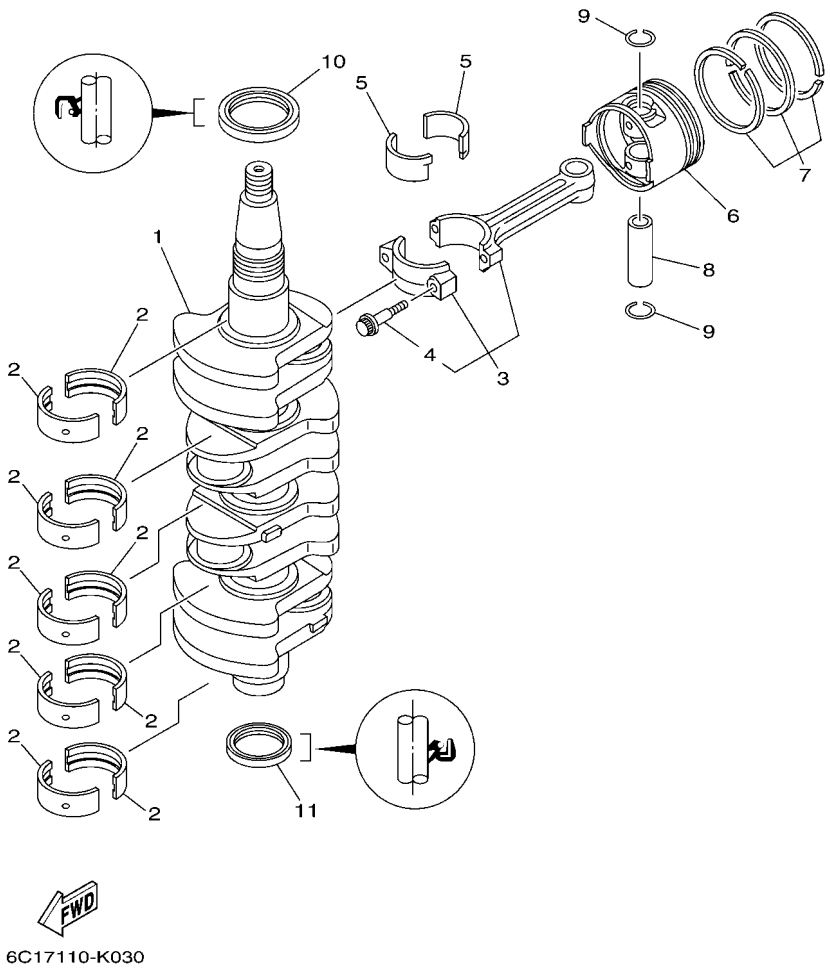

REF. NO.	PART NO. N° PIECES	DESCRIPTION DESCRIPTION	ED	ET				REMARKS REMARQUES
1	6C5–11411–10	CRANKSHAFT VILEBREQUIN COMPLET	1	1				
2	6BG–11416–00	PLANE BEARING, CRANKSHAFT 1 COUSSINET DE VILEBREQUIN 1	10	10				UR YELLOW UR YELLOW
	6BG–11416–10	PLANE BEARING, CRANKSHAFT 1 COUSSINET DE VILEBREQUIN 1	10	10				UR RED UR RED
	6BG–11416–20	PLANE BEARING, CRANKSHAFT 1 COUSSINET DE VILEBREQUIN 1	10	10				UR PINK UR PINK
	6BG–11416–30	PLANE BEARING, CRANKSHAFT 1 COUSSINET DE VILEBREQUIN 1	10	10				UR GREEN UR GREEN
3	6C5–11650–10	CONNECTING ROD ASSY BIELLE COMPLETTE	4	4				
4	6C5–11654–00	.BOLT, CONNECTING ROD .BOULON, BIELLE	2	2				
5	6CJ–11656–00	PLANE BEARING, CONNECTING ROD ROULEMENT DE BIELLE	8	8				UR YELLOW UR YELLOW
	6CJ–11656–10	PLANE BEARING, CONNECTING ROD ROULEMENT DE BIELLE	8	8				UR RED UR RED
	6CJ–11656–20	PLANE BEARING, CONNECTING ROD ROULEMENT DE BIELLE	8	8				UR PINK UR PINK
	6CJ–11656–30	PLANE BEARING, CONNECTING ROD ROULEMENT DE BIELLE	8	8				UR GREEN UR GREEN
6	69W–11631–01–97	PISTON (STD) PISTON (STD)	4	4				
	69W–11635–01	PISTON (0.25MM O/S) PISTON (0.25MM O/S)	4	4				AP AP
	69W–11636–01	PISTON (0.50MM O/S) PISTON (0.50MM O/S)	4	4				AP AP
7	67C–11603–01	PISTON RING SET (STD) JEU DE SEGMENTS (STD)	4	4				
	67C–11604–01	PISTON RING SET (0.25MM O/S) JEU DE SEGMENTS (0.25MM O/S)	4	4				AP AP
	67C–11605–01	PISTON RING SET (0.50MM O/S) JEU DE SEGMENTS (0.50MM O/S)	4	4				AP AP
8	62Y–11633–00	PIN, PISTON AXE, PISTON	4	4				
9	93450–17129	CIRCLIP CIRCLIP	8	8				
10	93102–43M42	OIL SEAL JOINT SPY	1	1				
11	93101–35002	OIL SEAL JOINT SPY	1	1				

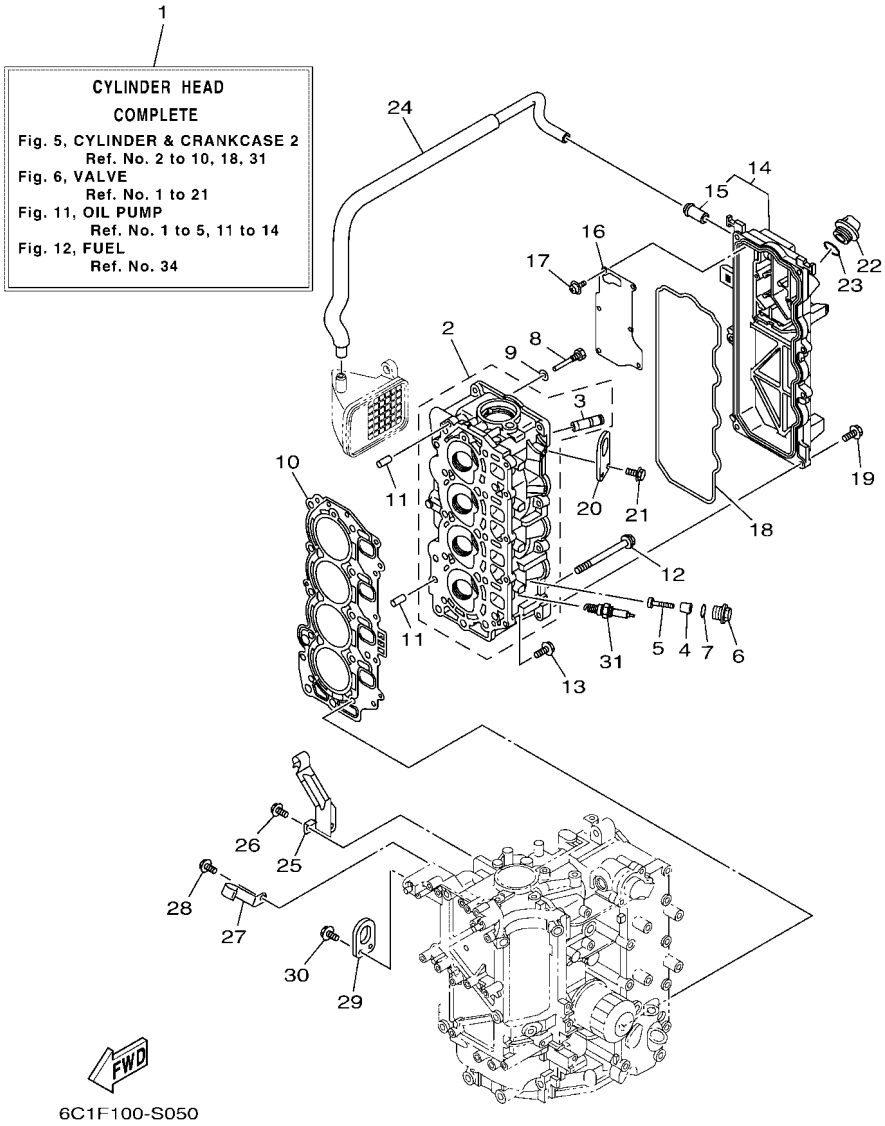

FIG. 5 CYLINDER & CRANKCASE 2 — CYLINDRE & CARTER 2

REF. NO.	PART NO. N° PIECES	DESCRIPTION DESCRIPTION	ED	ET				REMARKS REMARQUES
1	6C5–W009A–13–9S	CYLINDER HEAD COMPLETE CULASSE (ENS.)	1	1				
2	6C5–11111–20–9S	HEAD, CYLINDER 1 CULASSE, 1	1	1				
3	62Y–11133–31	.GUIDE, VALVE 1 .GUIDE, SOUPAPE 1	8	8				
4	6G8–11325–00	ANODE ANODE	4	4				
5	98980–05025	SCREW, BIND VIS, DE PRESSION	4	4				
6	6G8–11197–A0	PLUG, BLIND PLOT, BORGNE	4	4				
7	93210–13M63	O-RING JOINT TORIQUE	4	4				
8	90109–06M65	BOLT BOULON	1	1				
9	90430–06014	GASKET JOINT	1	1				
10	6C5–11181–01	GASKET, CYLINDER HEAD 1 JOINT, DE CULASSE 1	1	1				
11	99530–08012	PIN, DOWEL GOUJON, D'ASSEMBLAGE	2	2				
12	90105–09009	BOLT, FLANGE BOULON, A COLLERETTE	10	10				
13	90119–06MA3	BOLT, WITH WASHER BOULON, AVEC RONDELLE	5	5				
14	6C5–11191–02–9S	COVER, CYLINDER HEAD 1 COUVERCLE, CULASSE 1	1	1				
15	62Y–14485–00	.PIPE, JOINT .DURITE	1	1				
16	6C5–11168–00	COVER, BREATHER COUVERCLE, RENIFLARD	1	1				
17	97607–04210	SCREW, WITH WASHER VIS, AVEC RONDELLE	6	6				
18	62Y–11356–00	SEAL, CYLINDER 2 JOINT, SPY CYLINDRE	1	1				
19	97E95–06520	BOLT, HEXAGON W/W DEEP RECESS VIS HEXAGONAL AVC RONDELLE	7	7				
20	6CJ–11119–00	HANGER, ENGINE ANNEAU, LEVAGE	1	1				
21	97E95–06520	BOLT, HEXAGON W/W DEEP RECESS VIS HEXAGONAL AVC RONDELLE	2	2				
22	6G8–15363–00	PLUG, OIL PLOT, HUILE	1	1				
23	93210–24M79	O-RING JOINT TORIQUE	1	1				
24	6C5–1531A–10	HOSE, BREATHER 1 DURITE DE RENIFLARD 1	1	1				
25	6C5–15378–00	HOLDER SUPPORT	1	1				
26	97E95–06514	BOLT, HEXAGON W/W DEEP RECESS VIS HEXAGONAL AVC RONDELLE	1	1				
27	6C5–15378–11	HOLDER SUPPORT	1	1				

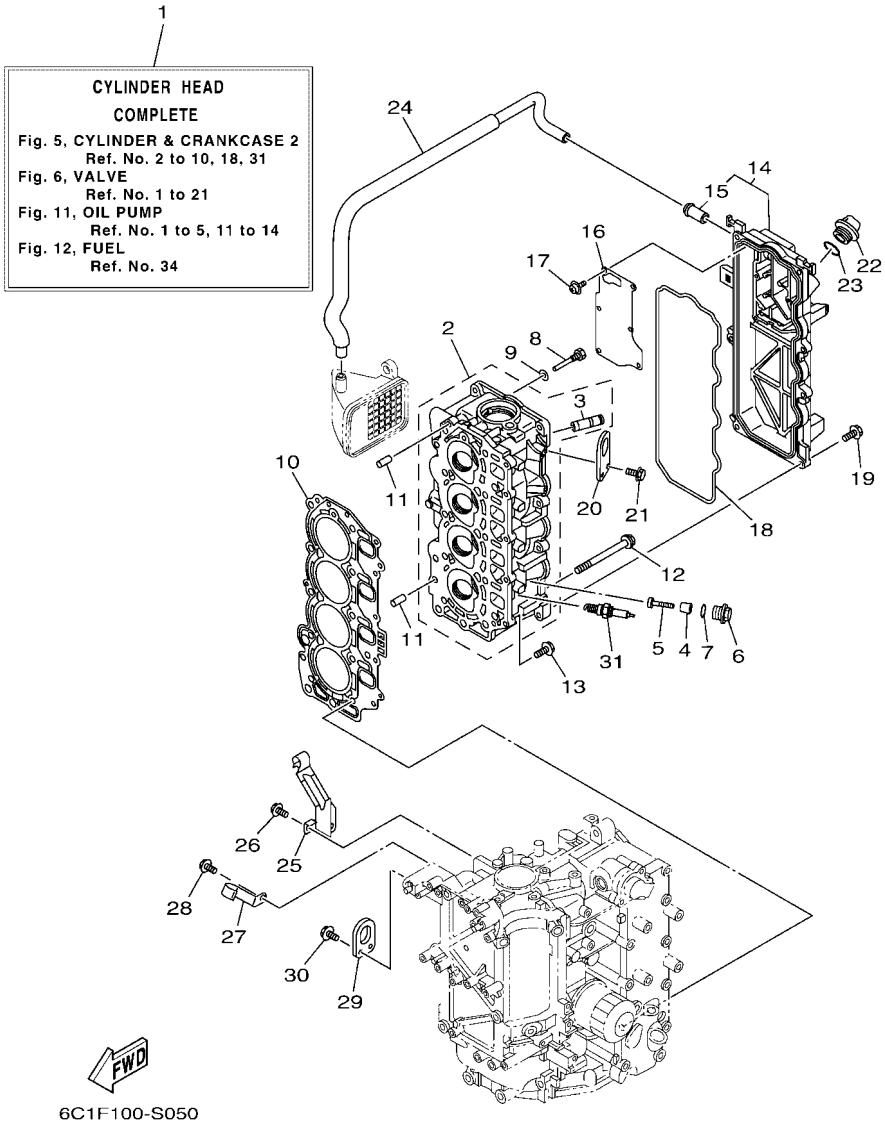

FIG. 5 CYLINDER & CRANKCASE 2 — CYLINDRE & CARTER 2

REF. NO.	PART NO. N° PIECES	DESCRIPTION DESCRIPTION	ED	ET				REMARKS REMARQUES
28	97E95–06514	BOLT, HEXAGON W/W DEEP RECESS VIS HEXAGONAL AVC RONDELLE	1	1				
29	62Y–11119–00	HANGER, ENGINE ANNEAU, LEVAGE	1	1				
30	97E95–06520	BOLT, HEXAGON W/W DEEP RECESS VIS HEXAGONAL AVC RONDELLE	2	2				
31	94702–00418	PLUG, SPARK (NGK DPR6EB-9) BOUGIE D,ALLUMAGE (NGK DPR6EB-	4	4				

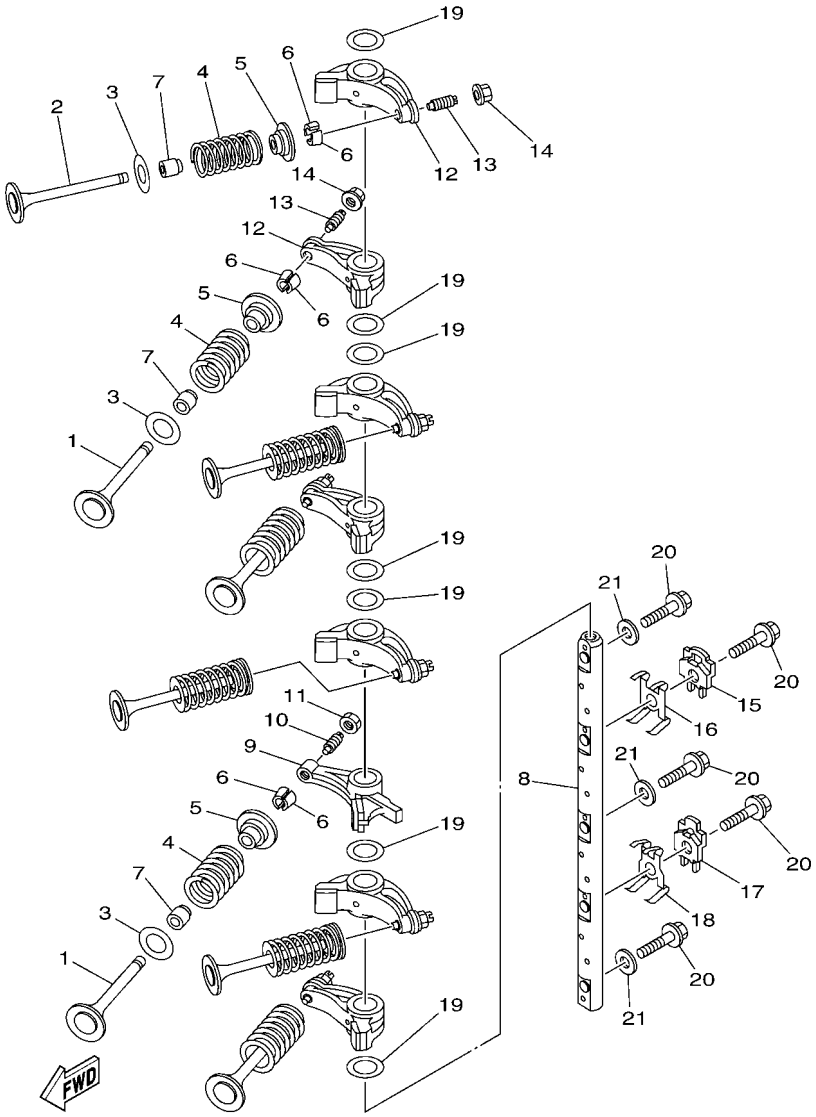

6C12100-E050

FIG. 6 VALVE SOUPAPE

REF. NO.	PART NO. N° PIECES	DESCRIPTION DESCRIPTION	ED	ET				REMARKS REMARQUES
1	69W–12111–00	VALVE, INTAKE SOUPAPE, ADMISSION	4	4				
2	69W–12121–10	VALVE, EXHAUST SOUPAPE, ECHAPPEMENT	4	4				
3	62Y–12116–00	SEAT, VALVE SPRING SIEGE, RESSORT DE SOUPAPE	8	8				
4	51Y–12114–00	SPRING, VALVE OUTER RESSORT DE SOUPAPE, EXTERNE	8	8				
5	30X–12117–00	RETAINER, VALVE SPRING BUTEE DE RESSORT DE SOUPAPE	8	8				
6	30X–12118–00	LOCK, VALVE SPRING RETAINER FRAISE, SOUPAPE	16	16				
7	51Y–12119–00	SEAL, VALVE STEM JOINT, QUEUE DE SOUPAPE	8	8				
8	6C5–12146–00	SHAFT, ROCKER AXE, CULBUTEUR	1	1				
9	62Y–12151–00	ARM, VALVE ROCKER CULBUTEUR	1	1				
10	64J–12159–00	SCREW, VALVE ADJUSTING VIS, REGLAGE DE SOUPAPE	1	1				
11	62Y–12158–00	NUT, LOCK CONTRE-ECROU	1	1				
12	6C5–12151–00	ARM, VALVE ROCKER CULBUTEUR	7	7				
13	6C5–12159–00	SCREW, VALVE ADJUSTING VIS, REGLAGE DE SOUPAPE	7	7				
14	6C5–12158–00	NUT, LOCK CONTRE-ECROU	7	7				
15	6C5–12231–00	GUIDE, STOPPER 1 GUIDE, BUTEE 1	1	1				
16	6C5–12233–00	PLATE, GUIDE STOPPER 1 PLAQUE, GUIDE BUTEE 1	1	1				
17	6C5–12241–00	GUIDE, STOPPER 2 GUIDE, BUTEE 2	1	1				
18	6C5–12243–00	PLATE, GUIDE STOPPER 2 PLAQUE, GUIDE BUTEE 2	1	1				
19	90201–16014	WASHER, PLATE RONDELLE, PLATE	7	7				
20	90105–08060	BOLT, FLANGE BOULON, A COLLERETTE	5	5				
21	92990–08200	WASHER, PLAIN RONDELLE, PLATE	3	3				

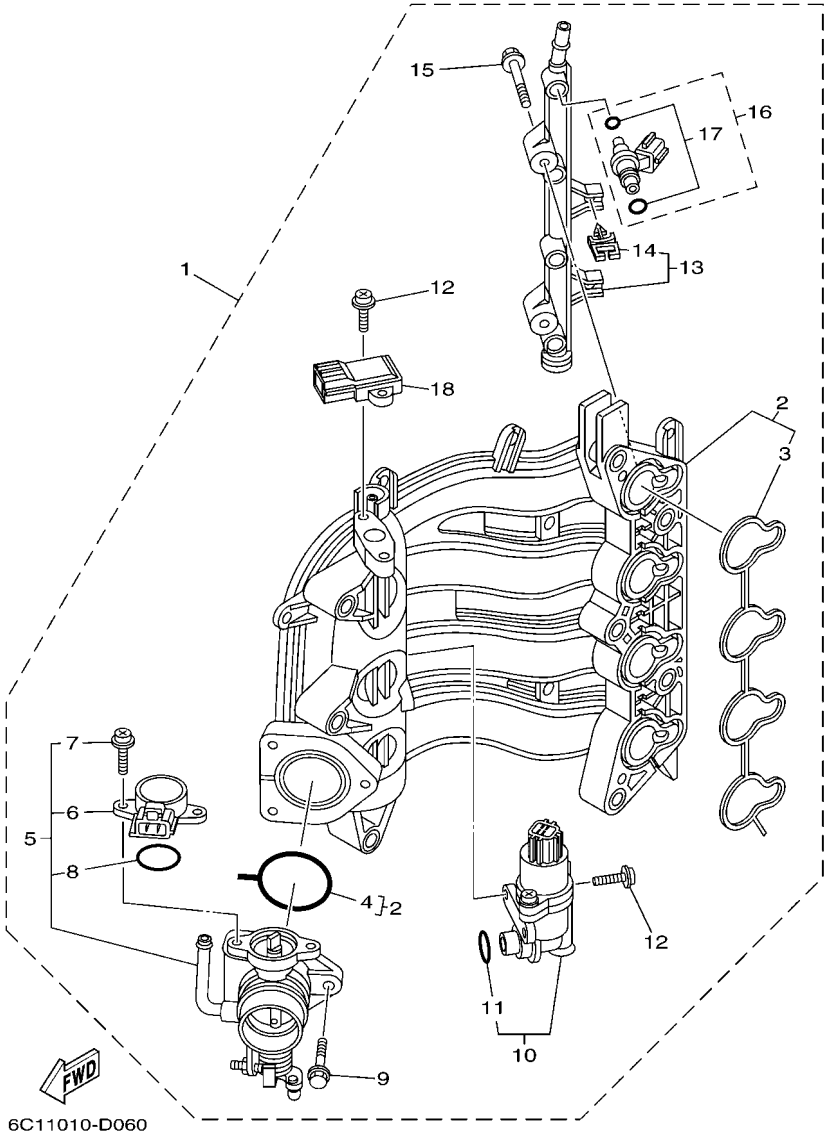

FIG. 7 INTAKE 1 — ADMISSION 1

REF. NO.	PART NO. N° PIECES	DESCRIPTION DESCRIPTION	ED	ET				REMARKS REMARQUES
1	6C5–14200–03	INTAKE ASSY ADMISSION (ENS.)	1	1				
2	6C5–13641–01	.MANIFOLD, INTAKE 1 .TUBULURE, ADMISSION 1	1	1				
3	6C5–13645–00	..GASKET, MANIFOLD 1 ..JOINT, TUBULURE 1	1	1				
4	6C5–13557–00	..GASKET ..JOINT	1	1				
5	6C5–13750–00	.THROTTLE BODY ASSY .CARTER D'ACCELERATEUR COMPLET	1	1				
6	6C5–85885–00	..THROTTLE SENSOR ASSY ..SENSITOMETRE (ENS.)	1	1				
7	6C5–81145–00	..SCREW 1 ..VIS 1	2	2				
8	6C5–8182L–00	..O-RING 1 ..JOINT TORIQUE 1	1	1				
9	6C5–14496–00	.BOLT .BOULON	3	3				
10	6C5–13105–03	.CONTROL VALVE ASSY .SOUPAPE DE CONTROLE COMPLET	1	1				
11	6C5–1319C–00	..O-RING ..JOINT TORIQUE	1	1				
12	6C5–81146–10	.SCREW 2 .VIS 2	4	4				
13	6C5–13161–00	.PIPE, DELIVERY 1 .DURITE REFOULEMENT 1	1	1				
14	90464–07M56	..CLAMP ..BRIDE	2	2				
15	6C5–14446–00	.BOLT .BOULON	2	2				
16	6C5–13761–00	.INJECTOR .INJECTEUR	4	4				
17	6C5–1410B–00	..PACKING KIT ..POCHETTE DE JOINTS	1	1				
18	68F–83688–00	.SENSOR ASSY .SONDE (ENS.)	1	1				

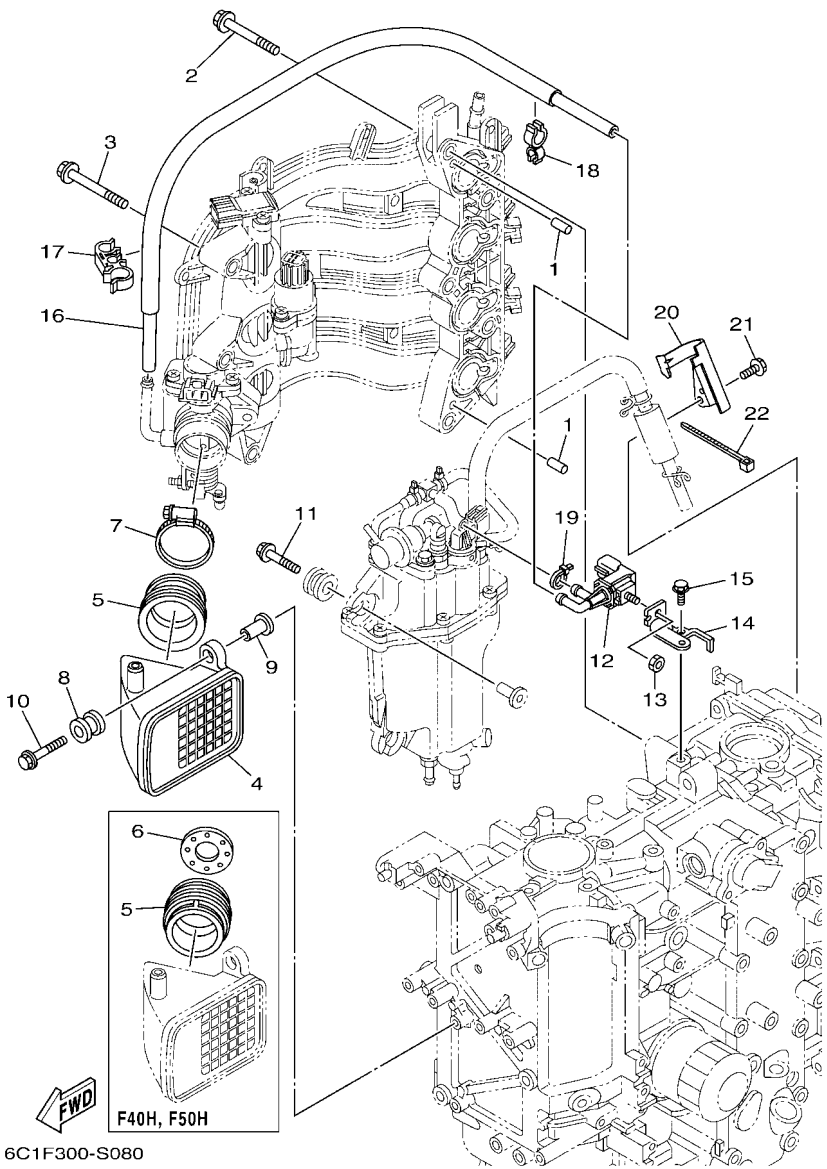

6C1F300-S080

FIG. 8 INTAKE 2 — ADMISSION 2

REF. NO.	PART NO. N° PIECES	DESCRIPTION DESCRIPTION	ED	ET				REMARKS REMARQUES
1	93608–12M05	PIN, DOWEL AXE	2	2				
2	90119–08190	BOLT, WITH WASHER BOULON, AVEC RONDELLE	5	5				
3	90119–06304	BOLT, WITH WASHER BOULON, AVEC RONDELLE	3	3				
4	6C5–14440–10	SILENCER ASSY, INTAKE SIENCIEUX D'ADMISSION	1	1				
5	6C1–14453–02	JOINT, AIR CLEANER 1 RACCORD, FILTRE A AIR 1	1	1				F40H,F50H F40H,F50H
	6C5–14453–02	JOINT, AIR CLEANER 1 RACCORD, FILTRE A AIR 1		1				F60F F60F
6	6C1–14477–00	PLATE PLAQUE	1	1				F50H F50H
	6AK–14477–01	PLATE PLAQUE		1				F40H F40H
7	90450–50001	HOSE CLAMP ASSY BRIDE, DE DURITE	1	1				
8	6A0–82317–01	DAMPER, IGNITION COIL AMORTISSEUR, BOBINE D'ALLUM	2	2				
9	90387–06119	COLLAR COLLERETTE	2	2				
10	90119–06297	BOLT, WITH WASHER BOULON, AVEC RONDELLE	2	2				
11	90119–06291	BOLT, WITH WASHER BOULON, AVEC RONDELLE	3	3				
12	6C5–86120–00	SOLENOID VALVE ASSY SOLENOIDE	1	1				
13	95380–06600	NUT, HEXAGON ECROU	1	1				
14	6BG–86112–10	STAY, SOLENOID SUPPORT, SOLENOIDE	1	1				
15	97E95–06516	BOLT, HEXAGON W/W DEEP RECESS VIS HEXAGONAL AVC RONDELLE	1	1				
16	6C5–12576–00	HOSE 1 TUYAU 1	1	1				
17	90464–15008	CLAMP BRIDE	1	1				
18	90464–12006	CLAMP BRIDE	1	1				
19	90465–11M10	CLAMP BRIDE	1	1				
20	6C5–13428–01	BRACKET, STRAINER 1 SUPPORT, FILTRE 1	1	1				
21	97E95–06516	BOLT, HEXAGON W/W DEEP RECESS VIS HEXAGONAL AVC RONDELLE	1	1				
22	90465–13M18	CLAMP BRIDE	1	1				

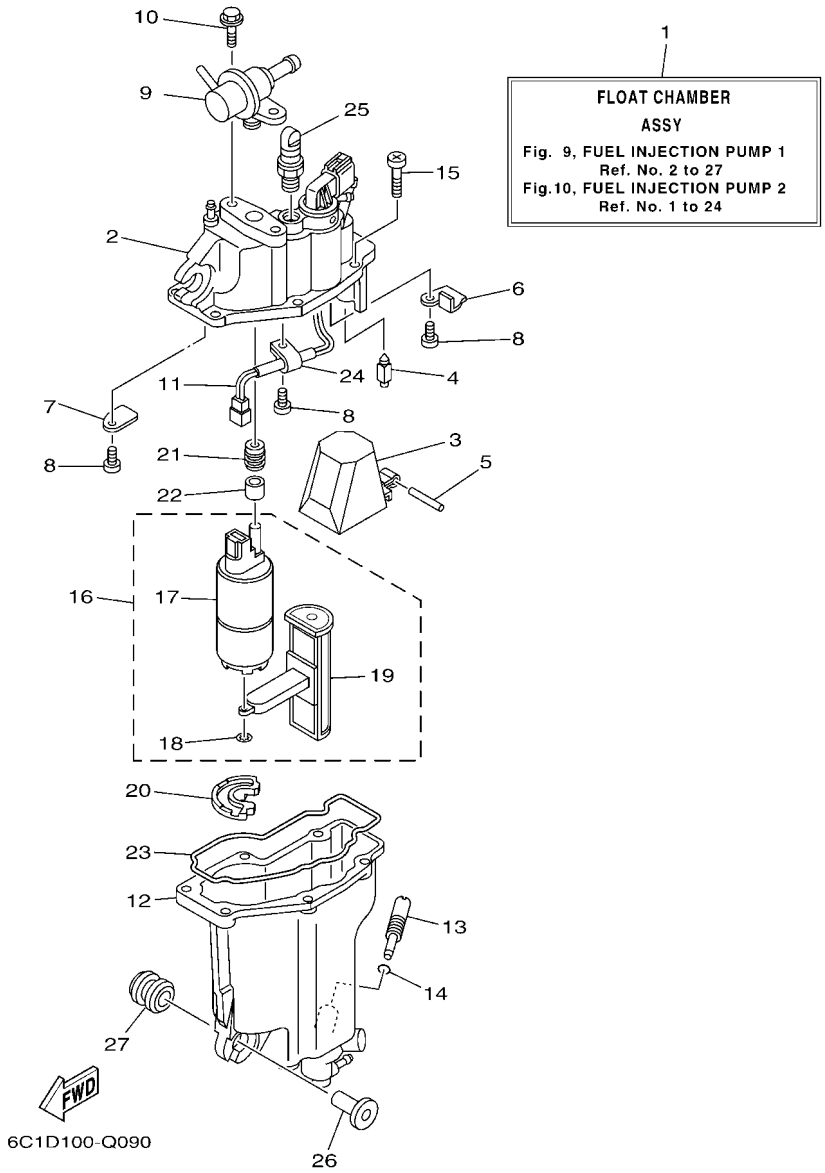

FIG. 9 FUEL INJECTION PUMP 1 POMPE A INJECTEUR 1

REF. NO.	PART NO. N° PIECES	DESCRIPTION DESCRIPTION	ED	ET				REMARKS REMARQUES
1	6C5–14180–04	FLOAT CHAMBER ASSY CUVE DE FLOTTEUR	1	1				
2	6C5–14182–20	COVER, FLOAT CHAMBER COUVERCLE, CUVE DE FLOTTEUR	1	1				
3	6C5–14985–00	FLOAT FLOTTEUR	1	1				
4	6C5–14546–10	VALVE, NEEDLE POINTEAU	1	1				
5	6C5–14386–00	PIN, FLOAT AXE, FLOTTEUR	1	1				
6	6C5–2441R–10	PLATE, BAFFLE 1 SEPARATEUR 1	1	1				
7	6C5–2441T–10	PLATE, BAFFLE 2 SEPARATEUR 2	1	1				
8	6C5–24453–00	SCREW VIS	3	3				
9	6C5–13906–02	REGULATOR, PRESSURE REGULATEUR DE PRESSION	1	1				
10	6C5–24592–00	BOLT BOLTE	2	2				
11	6C5–87226–00	WIRE HARNESS ASSY ENS. FAISCEAU ELECTRIQUE	1	1				
12	6C5–14960–20	BODY ASSY CARTER (ENS.)	1	1				
13	6C5–14191–00	PLUG, DRAIN PLOT, VIDANGE	1	1				
14	6C5–14397–00	O-RING JOINT TORIQUE	1	1				
15	6C5–14567–00	SCREW VIS	6	6				
16	6C5–13910–10	FUEL PUMP ASSY POMPE A ESSENCE COMPLET	1	1				
17	6C5–13907–00	.FUEL PUMP COMP. .POMPE A CARBURANT COMP.	1	1				
18	6C5–14127–10	.CLIP .JONC	1	1				
19	6C5–13915–00	.FILTER .FILTRE	1	1				
20	6C5–13593–01	DAMPER AMORTISSEUR	1	1				
21	6C5–13781–00	DAMPER, PUMP AMORTISSEUR, POMPE	1	1				
22	6C5–13716–00	COLLAR COLLERETTE	1	1				
23	6C5–14984–10	GASKET, FLOAT CHAMBER JOINT, CUVE DE FLOTTEUR	1	1				
24	6C5–21337–10	CLAMP, CABLE COLLIER, CABLE	1	1				
25	6C5–14225–00	CAP COUVERCLE	1	1				
26	90387–06M69	COLLAR COLLERETTE	3	3				
27	90480–09M12	GROMMET PASSE-FIL	3	3				

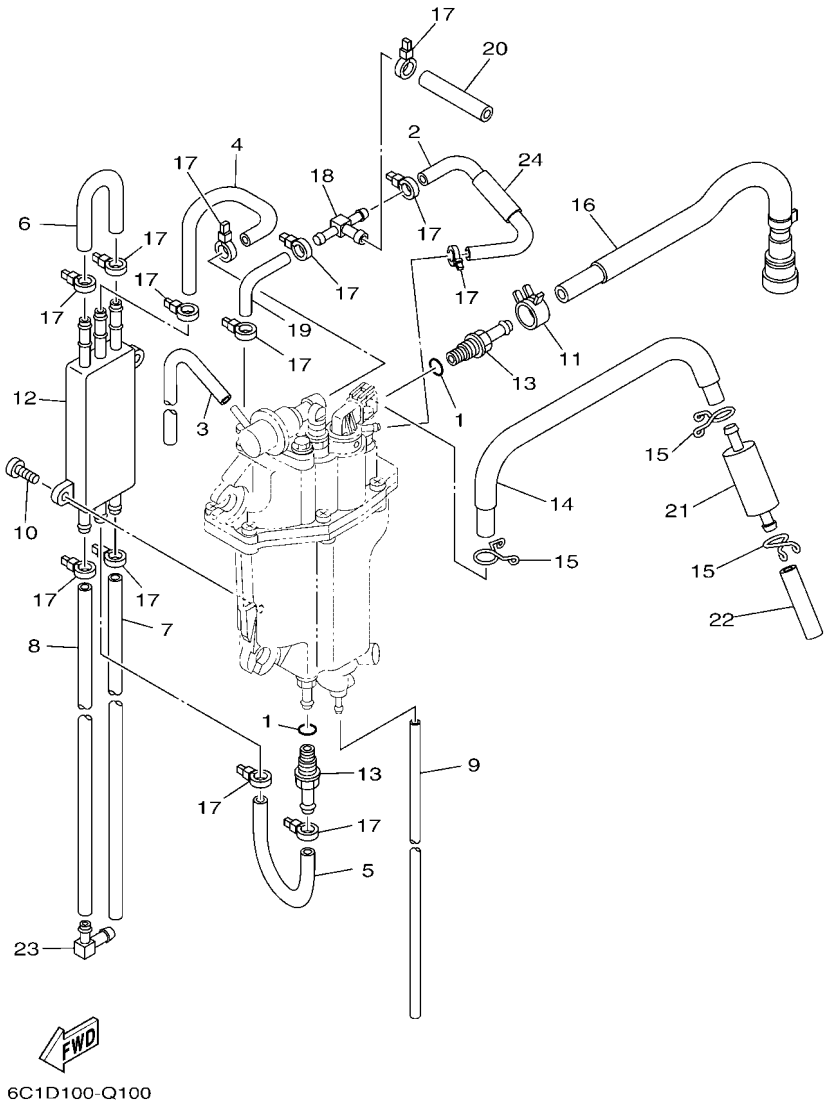

FIG. 10 FUEL INJECTION PUMP 2 — POMPE A INJECTEUR 2

REF. NO.	PART NO. N° PIECES	DESCRIPTION DESCRIPTION	ED	ET				REMARKS REMARQUES
1	6C5–13739–00	O-RING JOINT TORIQUE	2	2				
2	6C5–13546–00	HOSE 2 DURITE 2	1	1				
3	6C5–13542–00	HOSE, VACUUM SENSING 1 DURITE, SOUS VIDE DETECTION 1	1	1				
4	6C5–24321–00	PIPE 10 DURITE 10	1	1				
5	6C5–24322–00	PIPE 11 DURITE 11	1	1				
6	6BG–24323–00	PIPE 12 DURITE 12	1	1				
7	6CJ–24324–00	PIPE 13 DURITE 13	1	1				
8	6CJ–24325–00	PIPE 14 DURITE 14	1	1				
9	6BG–14149–00	PIPE DURITE	1	1				
10	6C5–24444–00	SCREW VIS	2	2				
11	6C5–13577–00	CLIP AGRAFE	1	1				
12	6C5–21841–01	COOLER RADIATEUR	1	1				
13	6C5–14251–00	NIPPLE RACCORD	2	2				
14	6C5–14148–00	PIPE DURITE	1	1				
15	6C5–24387–00	CLIP SANDOW	3	3				
16	6C5–13974–00	PIPE, FUEL 4 TUBE 4, CARBURANT	1	1				
17	90465–11M10	CLAMP BRIDE	13	13				
18	6C5–24379–00	PIPE, JOINT 4 DURITE RACCORDEMENT 4	1	1				
19	6C5–13545–00	HOSE 1 DURITE 1	1	1				
20	6C5–13547–00	HOSE 3 DURITE 3	1	1				
21	6C5–24251–01	STRAINER 1 FILTRE 1	1	1				
22	6C5–2451B–00	HOSE, FUEL INLET DURITE	1	1				
23	6C5–1410F–00	NIPPLE, 1 RACCORD, 1	1	1				
24	6C5–13548–00	HOSE, AIR 4 DURITE, A AIR 4	1	1				

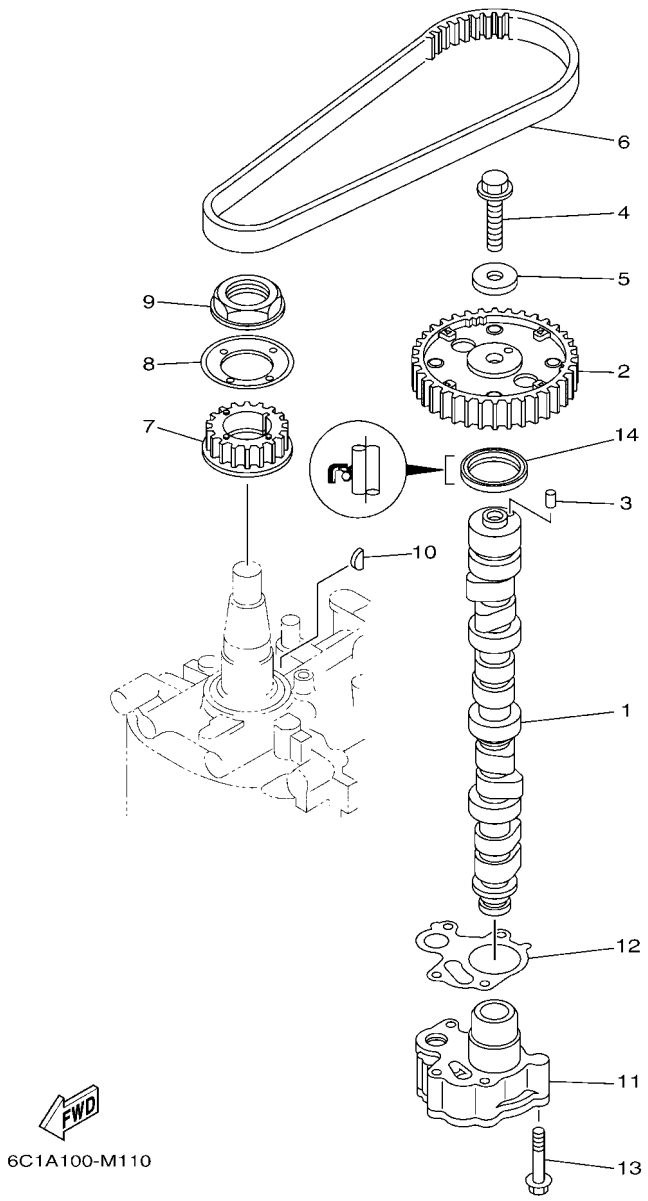

FIG. 11 OIL PUMP — POMPE A HUILE

REF. NO.	PART NO. N° PIECES	DESCRIPTION DESCRIPTION	ED	ET				REMARKS REMARQUES
1	6C5–12171–00	CAMSHAFT 1 ARBRE A CAMES 1	1	1				
2	6C5–11537–10	GEAR, DRIVEN PIGNON SECONDAIRE	1	1				
3	93605–17002	PIN, DOWEL AXE	1	1				
4	95817–10035	BOLT, FLANGE BOULON, A COLLERETTE	1	1				
5	90201–10144	WASHER, PLATE RONDELLE, PLATE	1	1				
6	6C5–46241–00	BELT COURROIE TRAPEZOIDALE	1	1				
7	6C5–11536–00	GEAR, DRIVE ENGRENAGE, MENANT	1	1				
8	62Y–11557–00	WASHER 1 RONDELLE 1	1	1				
9	90179–35001	NUT ECROU	1	1				
10	90280–03017	KEY, WOODRUFF CLAVETTE, DEMI-LUNE	1	1				
11	6C5–13300–01	OIL PUMP ASSY POMPE A HUILE COMPLETE	1	1				
12	6C5–13329–00	GASKET, PUMP COVER JOINT, COUVERCLE DE POMPE	1	1				
13	90119–06025	BOLT, WITH WASHER BOULON, AVEC RONDELLE	4	4				
14	93102–37M40	OIL SEAL JOINT SPY	1	1				

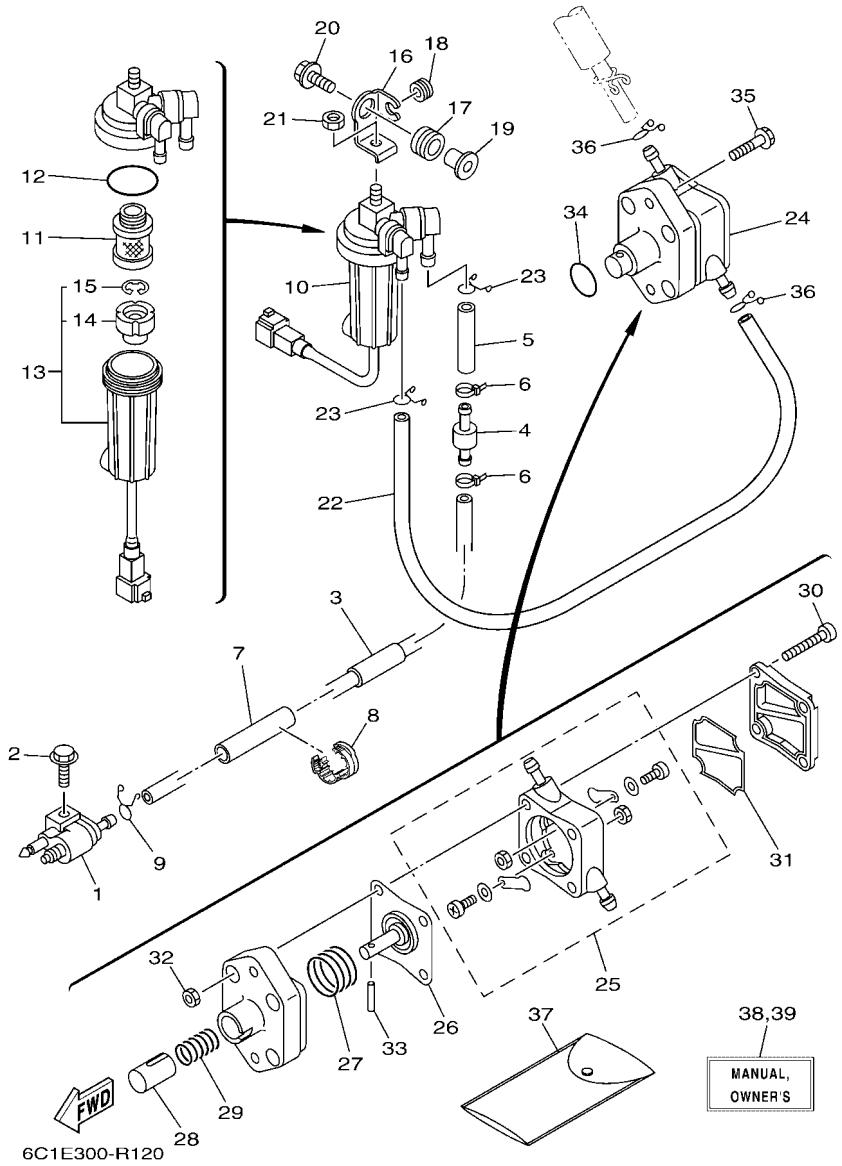

FIG. 12 FUEL — CARBURANT

REF. NO.	PART NO. N° PIECES	DESCRIPTION DESCRIPTION	ED	ET				REMARKS REMARQUES
1	6G1–24304–10	FUEL PIPE JOINT COMP. 1 DURITE RACCORDEMT. A ESSENCE	1	1				
2	97E95–06525	BOLT, HEXAGON W/W DEEP RECESS VIS HEXAGONAL AVC RONDELLE	1	1				
3	6C5–24313–10	PIPE 3 DURITE 3	1	1				
4	67F–24377–00	PIPE, JOINT 2 DURITE RACCORDEMENT 2	1	1				
5	90445–13M02	HOSE (L40) DURITE (L40)	1	1				
6	90465–11M10	CLAMP BRIDE	2	2				
7	90446–13M11	HOSE (L65) DURITE (L65)	1	1				
8	90464–13227	CLAMP BRIDE	1	1				
9	90467–09M17	CLIP JONC	1	1				
10	6D8–24560–01	FILTER ASSY ENS FILTRE	1	1				
11	6D8–24563–00	.ELEMENT, FILTER .ELEMENT, FILTRE	1	1				
12	6D8–24564–00	.GASKET .JOINT	1	1				
13	6D8–24562–00	.CUP, FILTER .CUVETTE, FILTRE	1	1				
14	6D8–24469–00	..FLOAT, WATER LEVEL ..FLOTTEUR	1	1				
15	6D8–24519–00	..CLIP ..JONC	1	1				
16	6C5–24566–11	BRACKET, FILTER SUPPORT, FILTRE	1	1				
17	90480–16013	GROMMET PASSE-FIL	1	1				
18	90480–10M58	GROMMET PASSE-FIL	1	1				
19	90387–08095	COLLAR COLLERETTE	1	1				
20	90119–08148	BOLT, WITH WASHER BOULON, AVEC RONDELLE	1	1				
21	95380–08600	NUT ECROU	1	1				
22	90445–13M36	HOSE (L350) DURITE (L350)	1	1				
23	90467–10M04	CLIP JONC	2	2				
24	6C5–24410–01	FUEL PUMP ASSY POMPE A ESSENCE	1	1				
25	6C5–24415–00	.BODY 4 .CORPS 4	1	1				
26	62Y–24411–03	.DIAPHRAGM .DIAPHRAGME	1	1				
27	62Y–24423–00	.SPRING, DIAPHRAGM .RESSORT, DIAPHRAGME	1	1				

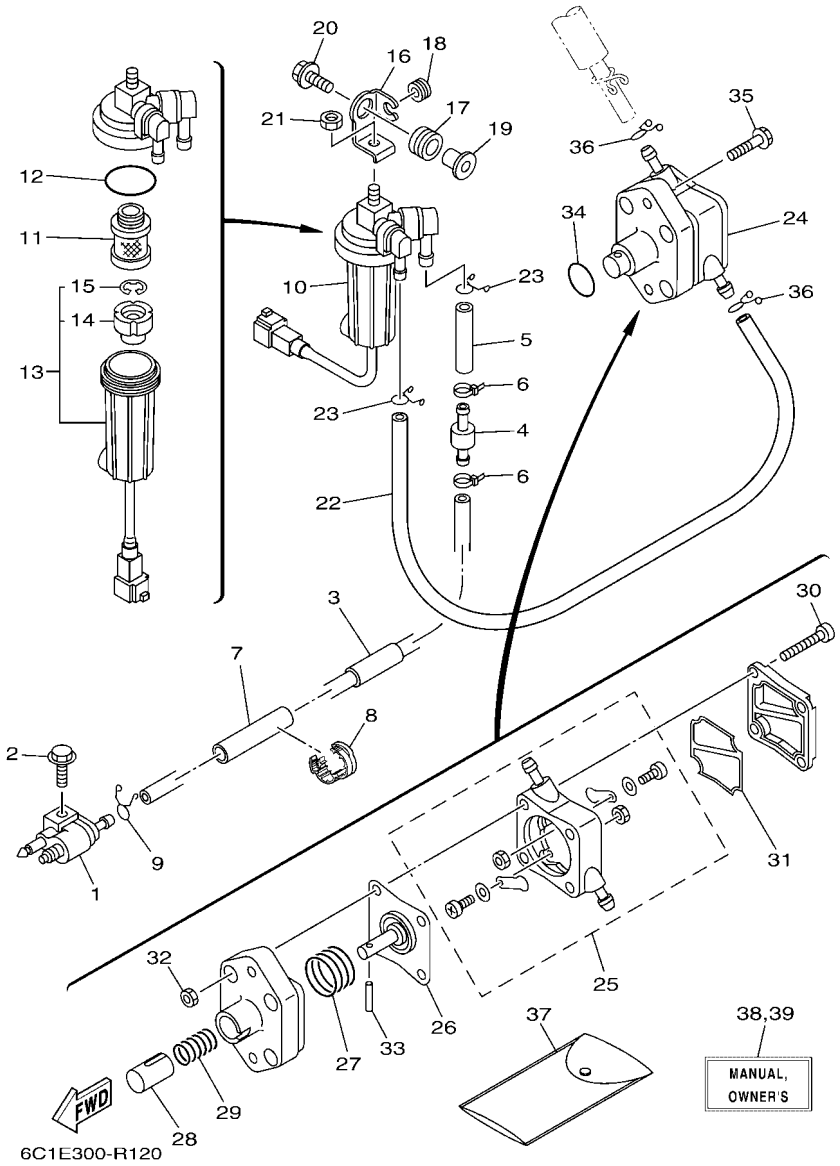

FIG. 12 FUEL CARBURANT

REF. NO.	PART NO. N° PIECES	DESCRIPTION DESCRIPTION	ED	ET				REMARKS REMARQUES
28	62Y–13131–00	.PLUNGER .PLONGEUR	1	1				
29	62Y–24454–00	.SPRING .RESSORT	1	1				
30	62Y–24444–01	.SCREW .VIS	4	4				
31	6C5–24471–01	.DIAPHRAGM .DIAPHRAGME	1	1				
32	95380–05600	.NUT .ECROU	4	4				
33	62Y–24374–01	.PIN .PIN	1	1				
34	93210–24M79	O-RING JOINT TORIQUE	1	1				
35	97E95–06530	BOLT, HEXAGON W/W DEEP RECESS VIS HEXAGONAL AVC RONDELLE	2	2				
36	90467–10M04	CLIP JONC	2	2				
37	6C5–28100–01	TOOL KIT TROUSSE A OUTILS	1	1				AP AP
38	6C1–28199–7M–E0	MANUAL,OWNER'S MANUEL D'UTILISATION	1	1				UR (E) UR (E)
	6C1–28199–7M–F0	MANUAL,OWNER'S MANUEL D'UTILISATION	1	1				UR (F) UR (F)
	6C1–28199–7M–S0	MANUAL,OWNER'S MANUEL D'UTILISATION	1	1				UR (ES) UR (ES)
	6C1–28199–7M–G0	MANUAL,OWNER'S MANUEL D'UTILISATION	1	1				UR (D) UR (D)
	6C1–28199–7M–D0	MANUAL,OWNER'S MANUEL D'UTILISATION	1	1				UR (NL) UR (NL)
	6C1–28199–7M–H0	MANUAL,OWNER'S MANUEL D'UTILISATION	1	1				UR (I) UR (I)
39	6C1–28199–8M–K0	MANUAL,OWNER'S MANUEL D'UTILISATION	1	1				UR (DK) UR (DK)
	6C1–28199–8M–R0	MANUAL,OWNER'S MANUEL D'UTILISATION	1	1				UR (GR) UR (GR)
	6C1–28199–8M–P0	MANUAL,OWNER'S MANUEL D'UTILISATION	1	1				UR (P) UR (P)
	6C1–28199–8M–N0	MANUAL,OWNER'S MANUEL D'UTILISATION	1	1				UR (N) UR (N)
	6C1–28199–8M–M0	MANUAL,OWNER'S MANUEL D'UTILISATION	1	1				UR (S) UR (S)
	6C1–28199–8M–L0	MANUAL,OWNER'S MANUEL D'UTILISATION	1	1				UR (SF) UR (SF)

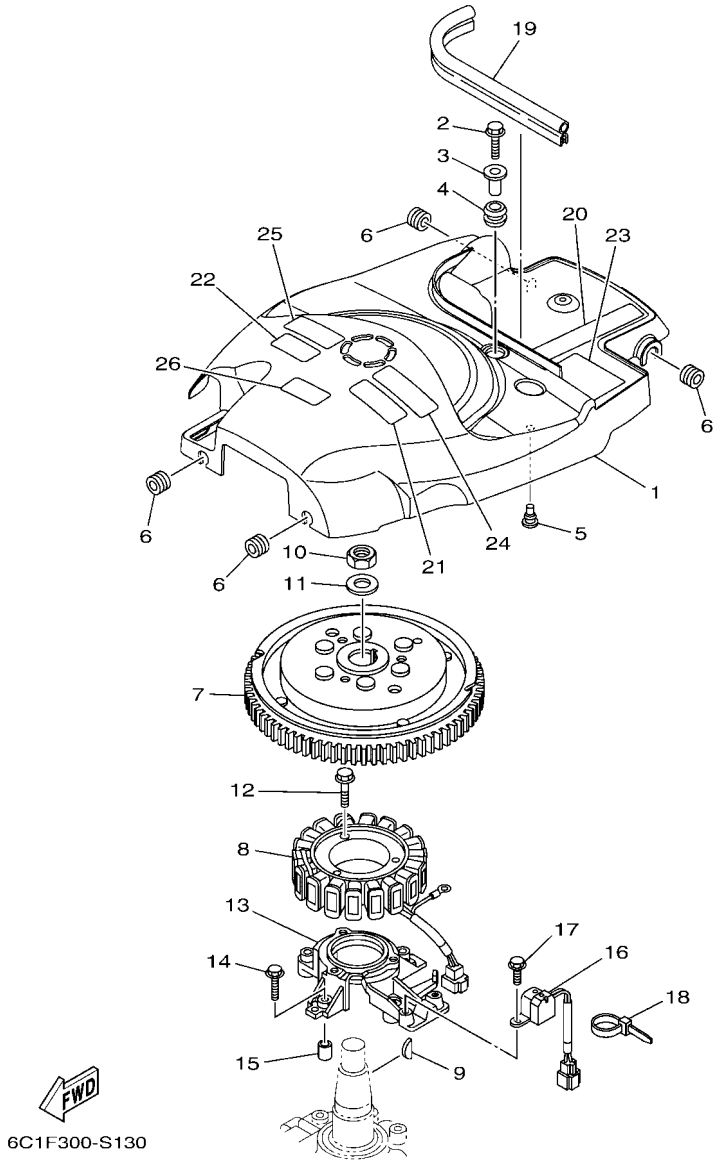

FIG. 13 GENERATOR — GENERATRICE

REF. NO.	PART NO. N° PIECES	DESCRIPTION DESCRIPTION	ED	ET				REMARKS REMARQUES
1	6C5–81337–11	COVER, FLYWHEEL COUVERCLE, VOLANT	1	1				
2	95D95–06020	BOLT, FLANGE DEEP RECESS BOULON FIXATION	1	1				
3	90387–06285	COLLAR COLLERETTE	1	1				
4	90480–15M31	GROMMET PASSE-FIL	1	1				
5	90480–06M19	GROMMET PASSE-FIL	1	1				
6	90480–12314	GROMMET PASSE-FIL	4	4				
7	6C5–81450–00	ROTOR ASSY ROTOR COMPLET	1	1				
8	6C5–81410–01	STATOR ASSY STATOR COMPLET	1	1				
9	6H4–11545–00	KEY, WOODRUFF CLAVETTE, DEMI-LUNE	1	1				
10	90170–20137	NUT ECROU	1	1				
11	90201–21M18	WASHER, PLATE RONDELLE, PLATE	1	1				
12	95023–06030	BOLT BOULON, A COLLERETTE	3	3				
13	6C5–85561–00	BASE, MAGNETO BASE, MAGNETO	1	1				
14	95023–06030	BOLT BOULON, A COLLERETTE	4	4				
15	99530–08012	PIN, DOWEL GOUJON, D'ASSEMBLAGE	2	2				
16	62Y–85580–00	COIL, PULSER BOBINE, PULSEUR	1	1				
17	97595–05512	BOLT, WITH WASHER VIS HEXAGONAL AVC RONDELLE	2	2				
18	90465–13M97	CLAMP BRIDE	1	1				
19	6CB–42617–00	DAMPER, FORM BOURRELET, CAOUTCHOUC	1	1				
20	6C5–13437–64	MARK, CAUTION MAKER	1	1				
21	6EE–81995–40	LABEL, WARNING ETIQUETTE, AVERTISSEMENT	1	1				
22	6EE–81995–50	LABEL, WARNING ETIQUETTE, AVERTISSEMENT	1	1				
23	62Y–83626–00	MARK 6 MARK 6	1	1				
24	6EE–81994–40	LABEL, SAFETY ETIQUETTE, SECURITE	1	1				
25	6EE–81994–50	LABEL, SAFETY ETIQUETTE, SECURITE	1	1				
26	6AG–81996–00	MARK MARQUE	1	1				

FIG. 14 ELECTRICAL 1 — PARTIE ELECTRIQUE 1

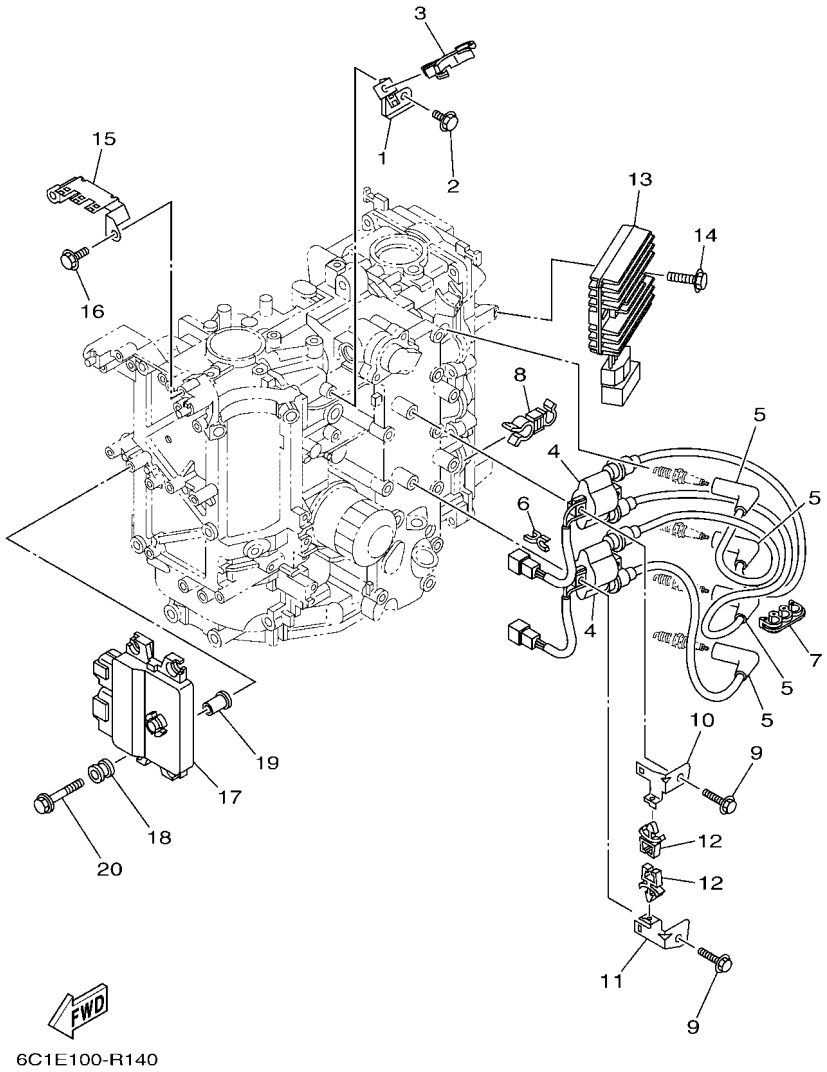

REF. NO.	PART NO. N° PIECES	DESCRIPTION DESCRIPTION	ED	ET				REMARKS REMARQUES
1	6C5–85525–00	PLATE PLAQUE	1	1				
2	97E95–06514	BOLT, HEXAGON W/W DEEP RECESS VIS HEXAGONAL AVC RONDELLE	1	1				
3	90464–18246	CLAMP BRIDE	1	1				
4	63P–82310–01	IGNITION COIL ASSY BOBINE D'ALLUMAGE	2	2				
5	6CJ–82340–00	HIGH TENSION CORD ASSY 1 CABLE HAUTE TENSION 1	4	4				
6	90464–07M41	CLAMP BRIDE	1	1				
7	90464–07M05	CLAMP BRIDE	1	1				
8	90464–13013	CLAMP BRIDE	1	1				
9	97E95–06525	BOLT, HEXAGON W/W DEEP RECESS VIS HEXAGONAL AVC RONDELLE	4	4				
10	6C5–82316–01	BRACKET, IGNITION COIL SUPPORT, BOBINE D'ALLUMAGE	1	1				
11	6C5–82316–11	BRACKET, IGNITION COIL SUPPORT, BOBINE D'ALLUMAGE	1	1				
12	90464–06001	CLAMP BRIDE	2	2				
13	68V–81960–10	RECTIFIER & REGULATOR ASSY REDRESSEUR REGULATEUR CPLT	1	1				
14	97E95–06525	BOLT, HEXAGON W/W DEEP RECESS VIS HEXAGONAL AVC RONDELLE	2	2				
15	6C5–82171–00	STAY, FUSE BOX SUPPORT, BOITE A FUSIBLES	1	1				
16	97E95–06514	BOLT, HEXAGON W/W DEEP RECESS VIS HEXAGONAL AVC RONDELLE	2	2				
17	6C1–8591A–25	ENGINE CONTROL UNIT ASSY BLOC DE CONTROL	1	1				F50H F50H
	6C5–8591A–25	ENGINE CONTROL UNIT ASSY BLOC DE CONTROL		1				F60F F60F
	6AK–8591A–05	ENGINE CONTROL UNIT ASSY BLOC DE CONTROL		1				F40H F40H
18	6C5–82317–01	DAMPER, IGNITION COIL AMORTISSEUR, BOBINE D'ALLUM	4	4				
19	90387–06119	COLLAR COLLERETTE	4	4				
20	90119–06289	BOLT, WITH WASHER BOULON, AVEC RONDELLE	4	4				

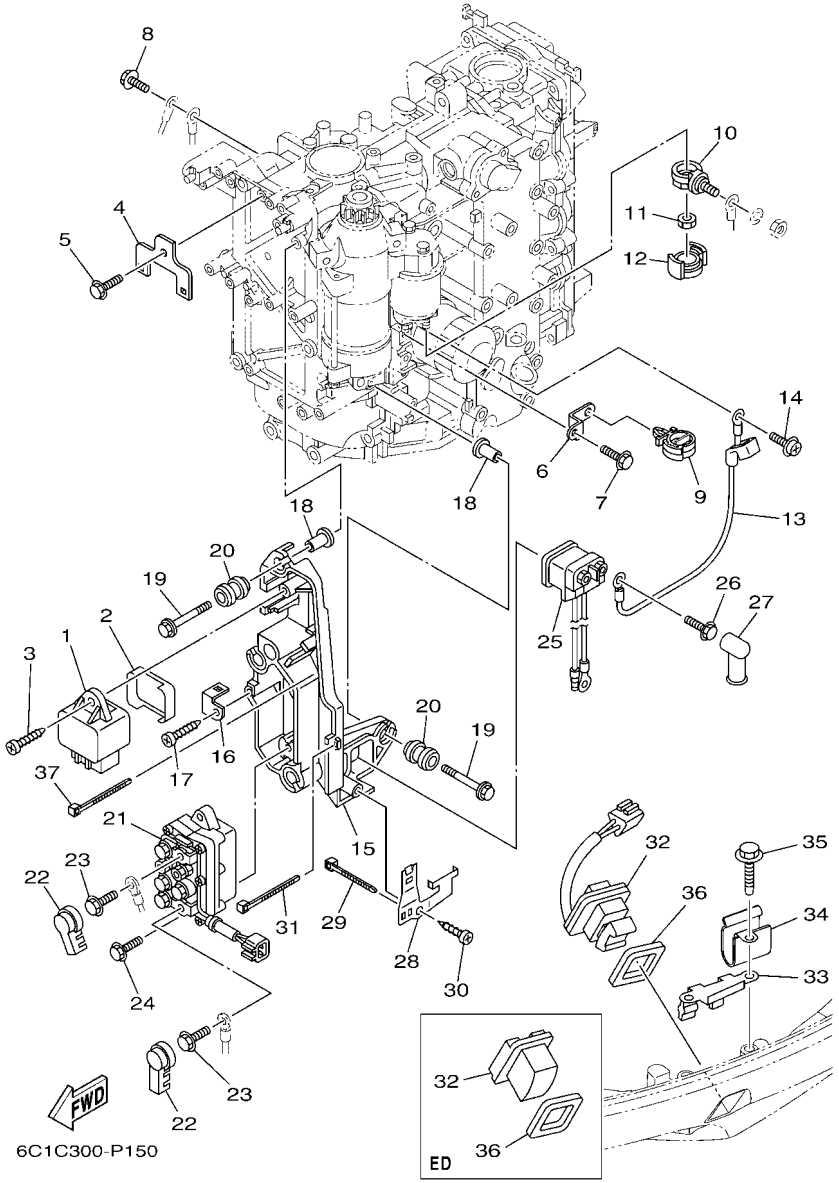

FIG. 15 ELECTRICAL 2 — PARTIE ELECTRIQUE 2

REF. NO.	PART NO. N° PIECES	DESCRIPTION DESCRIPTION	ED	ET				REMARKS REMARQUES
1	60E–81950–00	RELAY ASSY RELAIS COMPLET	1	1				
2	6C5–81336–01	GROMMET OEILLET CAOUTCHOUC	1	1				
3	97780–60620	SCREW, TAPPING VIS, TETE BOMBEE	1	1				
4	6C5–8257V–00	PLATE, CONNECTOR PLAQUE, CONNECTEUR	1	1				
5	97E95–06514	BOLT, HEXAGON W/W DEEP RECESS VIS HEXAGONAL AVC RONDELLE	1	1				
6	6C5–85525–10	PLATE PLAQUE	1	1				
7	97E95–06620	BOLT, HEXAGON W/W DEEP RECESS VIS HEXAGONAL AVC RONDELLE	3	3				
8	97E95–06620	BOLT, HEXAGON W/W DEEP RECESS VIS HEXAGONAL AVC RONDELLE	1	1				
9	90464–12183	CLAMP BRIDE	1	1				
10	60V–81925–00	TERMINAL BORNE	1	1				
11	90179–08003	NUT ECROU	1	1				
12	68F–82582–00	CAP,1 COUVERCLE 1	1	1				
13	6C5–81815–00	CORD, STARTER MOTOR FIL, DEMARREUR ELECTRIQUE	1	1				
14	90159–04005	SCREW, WITH WASHER VIS, AVEC RONDELLE	1	1				
15	6C5–81948–00	BRACKET SUPPORT	1	1				
16	6C5–85548–01	HOLDER SUPPORT	1	1				
17	97780–60620	SCREW, TAPPING VIS, TETE BOMBEE	1	1				
18	90387–06119	COLLAR COLLERETTE	4	4				
19	90119–06289	BOLT, WITH WASHER BOULON, AVEC RONDELLE	4	4				
20	6A0–82317–01	DAMPER, IGNITION COIL AMORTISSEUR, BOBINE D'ALLUM	4	4				
21	63P–81950–00	RELAY ASSY RELAIS COMPLET		1				
22	6P2–8183X–00	CAP, TERMINAL COUVERCLE, BORNE		2				
23	97E95–06610	BOLT, HEXAGON W/W DEEP RECESS VIS HEXAGONAL AVC RONDELLE		2				
24	97E95–06520	BOLT, HEXAGON W/W DEEP RECESS VIS HEXAGONAL AVC RONDELLE		2				
25	68V–8194A–00	RELAY RELAIS	1	1				
26	97E95–06610	BOLT, HEXAGON W/W DEEP RECESS VIS HEXAGONAL AVC RONDELLE	2	2				
27	6G5–82119–00	COVER, LEAD WIRE GARNITURE, FIL	2	2				

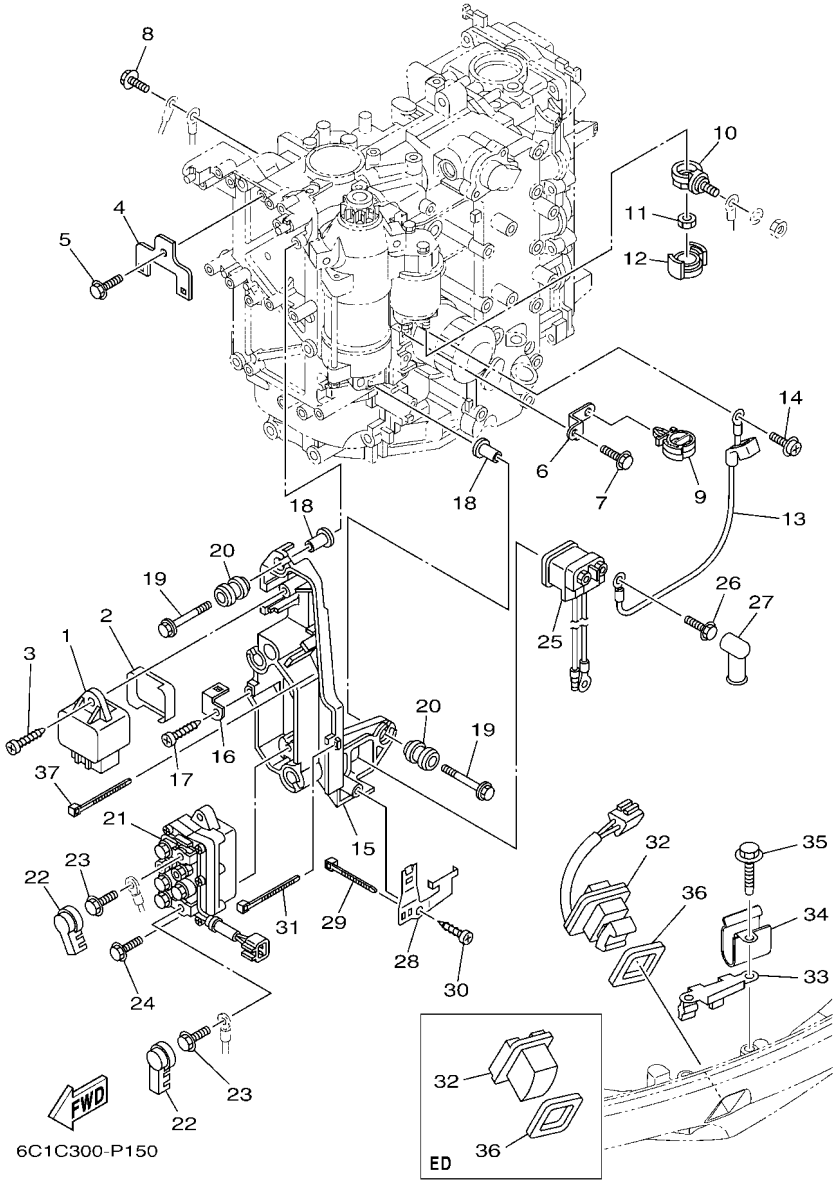

FIG. 15 ELECTRICAL 2 — PARTIE ELECTRIQUE 2

REF. NO.	PART NO. N° PIECES	DESCRIPTION DESCRIPTION	ED	ET				REMARKS REMARQUES
28	6C5–81953–00	STAY, RELAY SUPPORT, RELAIS	1	1				
29	90465–11M10	CLAMP BRIDE	1	1				
30	97780–60620	SCREW, TAPPING VIS, TETE BOMBEE	1	1				
31	90465–13M97	CLAMP BRIDE	1	1				
32	69J–42723–01	COVER, BOTTOM COUVERCLE	1					
	69J–82563–01	TRIM & TILT SWITCH ASSY INCLINER ET PARER COMMUTATEUR		1				
33	6BG–83614–00	BRACKET SUPPORT	1	1				
34	90465–08M89	CLAMP BRIDE	1	1				
35	90109–06M86	BOLT BOULON	2	2				
36	69J–82587–01	GASKET JOINT	1	1				
37	90465–13M97	CLAMP BRIDE	2	2				

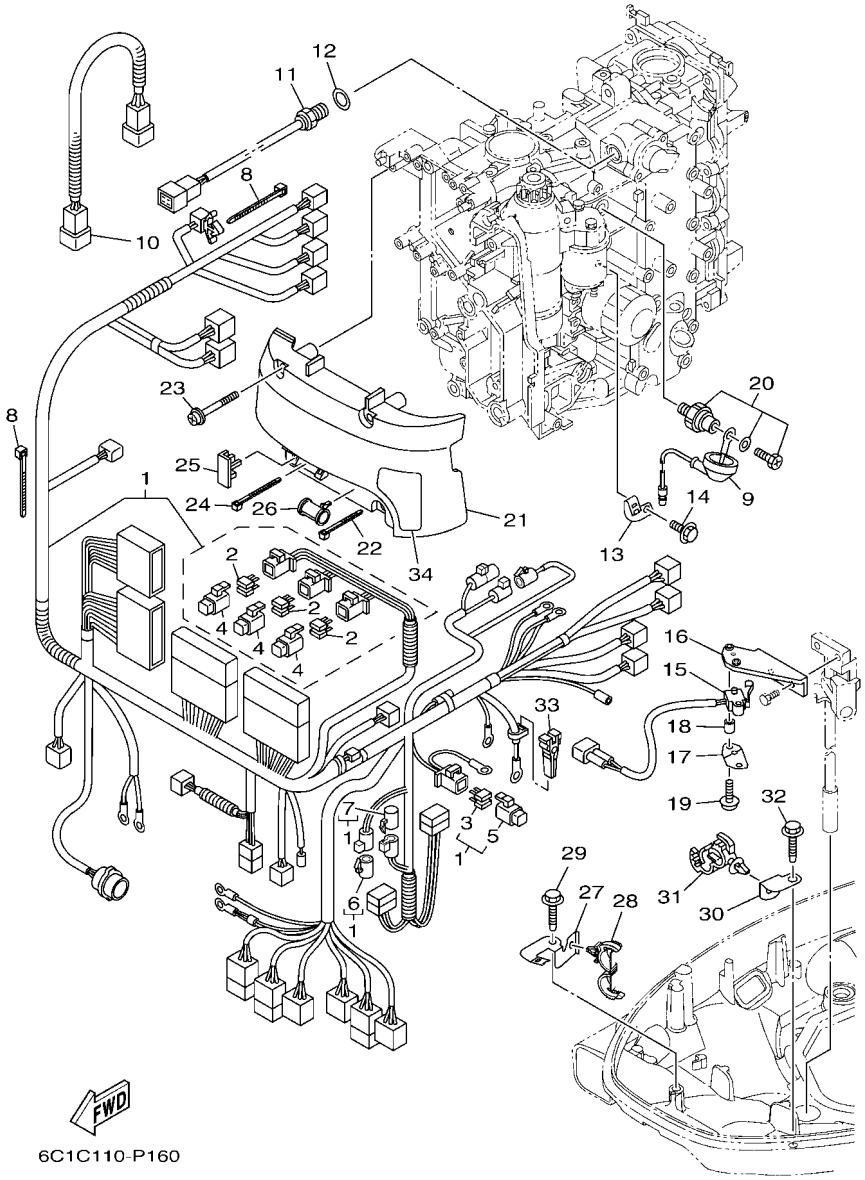

FIG. 16 ELECTRICAL 3 — PARTIE ELECTRIQUE 3

REF. NO.	PART NO. N° PIECES	DESCRIPTION DESCRIPTION	ED	ET				REMARKS REMARQUES
1	6C5–82590–B0	WIRE HARNESS ASSY FAISCEAU DE FILS COMPLET	1					
	6C5–82590–D2	WIRE HARNESS ASSY FAISCEAU DE FILS COMPLET		1				FOR TILT LIMIT FOR TILT LIMIT
2	67F–82151–00	.FUSE (20A) .FUSIBLE (20A)	6	6				
3	67F–82151–10	.FUSE (30A) .FUSIBLE (30A)	2	2				
4	67F–8215B–10	.CAP (YELLOW) .BOUCHON (YELLOW)	3	3				
5	67F–8215B–20	.CAP (GREEN) .BOUCHON (GREEN)	1	1				
6	6DA–82582–00	.CAP 1 (FEMALE) .BOUCHON 1 (FEMME)		1				FOR 6C5-82590-D2 FOR 6C5-82590-D2
7	6DA–82582–10	.CAP 1 (MALE) .BOUCHON 1 (MALE)		1				FOR 6C5-82590-D2 FOR 6C5-82590-D2
8	90465–13M11	CLAMP BRIDE	2	2				
9	68V–81315–01	LEAD WIRE ASSY FIL	1	1				
10	6C5–82553–00	EXTENSION, WIRE LEAD EXTENSION, FAISCEAU	1	1				
11	6CJ–85790–00	THERMOSENSOR ASSY SENSITOMETRE	1	1				
12	90430–14115	GASKET JOINT	1	1				
13	6C5–82388–10	PLATE PLAQUETTE	1	1				
14	97E95–06514	BOLT, HEXAGON W/W DEEP RECESS VIS HEXAGONAL AVC RONDELLE	1	1				
15	60V–8259F–01	SWITCH ASSY COMMUTATEUR	1	1				
16	6CJ–82554–00	STAY, NEUTRAL SWITCH SUPPORT, CONT DE POINT-MORT	1	1				
17	61A–82588–01	PLATE PLAQUE	1	1				
18	90387–04001	COLLAR COLLERETTE	1	1				
19	97985–04116	SCREW, WITH WASHER VIS, AVEC RONDELLE	2	2				
20	64J–82504–00	OIL PRESSURE SWITCH ASSY CONTACTEUR DE PRESSION D'HUILE	1	1				
21	6C5–81942–00	COVER COUVERCLE	1	1				
22	90465–13M39	CLAMP BRIDE	1	1				
23	90159–06M14	SCREW, WITH WASHER VIS, AVEC RONDELLE	4	4				
24	90465–13M24	CLAMP BRIDE	1	1				
25	6C5–82176–01	DAMPER AMORTISSEUR	2	2				
26	6C5–8252R–00	DAMPER AMORTISSEUR	1	1				

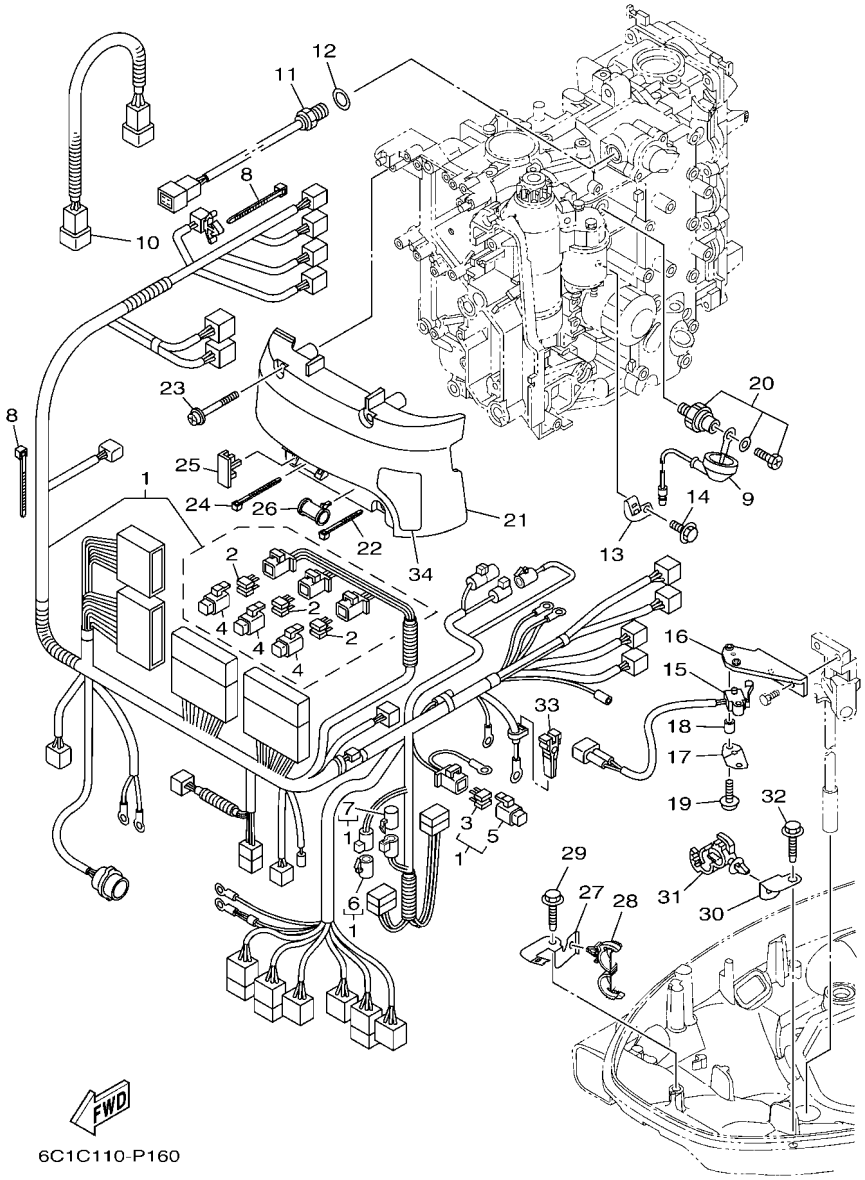

FIG. 16 ELECTRICAL 3 — PARTIE ELECTRIQUE 3

REF. NO.	PART NO. N° PIECES	DESCRIPTION DESCRIPTION	ED	ET				REMARKS REMARQUES
27	6BG–42811–01	STAY SUPPORT	1	1				
28	90464–18205	CLAMP BRIDE	1	1				
29	90109–06M86	BOLT BOULON	1	1				
30	63P–42756–00	STAY, CLAMP SUPPORT, COLLIER	1	1				
31	90464–12183	CLAMP BRIDE	1	1				
32	90109–06M86	BOLT BOULON	1	1				
33	67F–2812A–00	PULLER, FUSE TENDEUR, FUSIBLE	1	1				
34	6C5–81919–00	GRAPHIC, REGULATOR ADHESIF, REGULATEUR	1	1				

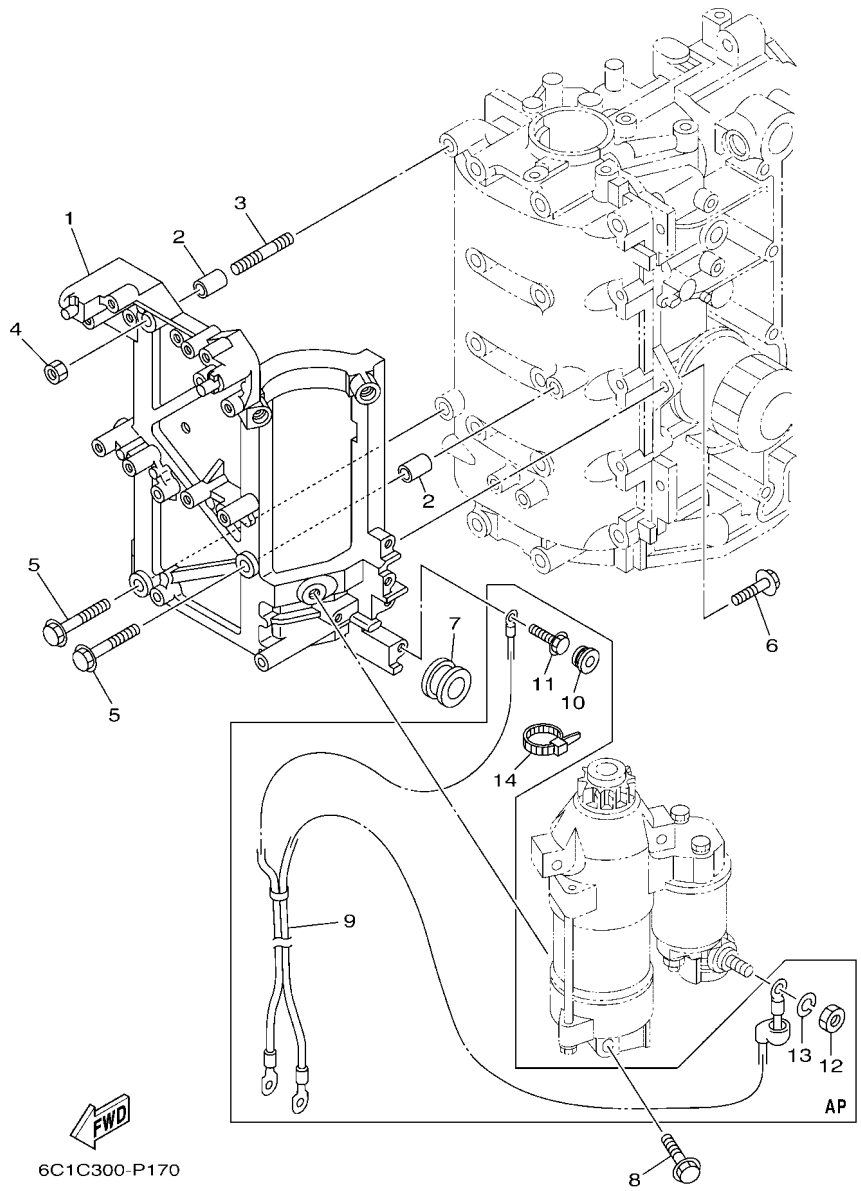

FIG. 17 ELECTRICAL 4 — PARTIE ELECTRIQUE 4

REF. NO.	PART NO. N° PIECES	DESCRIPTION DESCRIPTION	ED	ET				REMARKS REMARQUES
1	6C5–81822–00	BRACKET, STARTING MOTOR SUPPORT, DEMARREUR ELECTRIQUE	1	1				
2	99530–10114	PIN, DOWEL GOUJON, D'ASSEMBLAGE	2	2				
3	95680–08330	BOLT, STUD GOUJON	1	1				
4	95380–08600	NUT ECROU	1	1				
5	97E95–08535	BOLT, HEXAGON W/W DEEP RECESS VIS HEXAGONAL AVC RONDELLE	2	2				
6	97E95–08525	BOLT, HEXAGON W/W DEEP RECESS VIS HEXAGONAL AVC RONDELLE	2	2				
7	90480–24003	GROMMET PASSE-FIL	1	1				
8	97513–08545	BOLT, WITH WASHER VIS HEXAGONAL AVC RONDELLE	3	3				
9	6C5–82105–02	BATTERY CABLE CABLE DE BATTERIE	1	1				AP AP
10	90480–12072	GROMMET PASSE-FIL	1	1				AP AP
11	97E95–06620	BOLT, HEXAGON W/W DEEP RECESS VIS HEXAGONAL AVC RONDELLE	1	1				AP AP
12	95333–08600	NUT ECROU	1	1				AP AP
13	92903–08100	WASHER, SPRING RONDELLE, GROWER	1	1				AP AP
14	90465–13M18	CLAMP BRIDE	1	1				AP AP

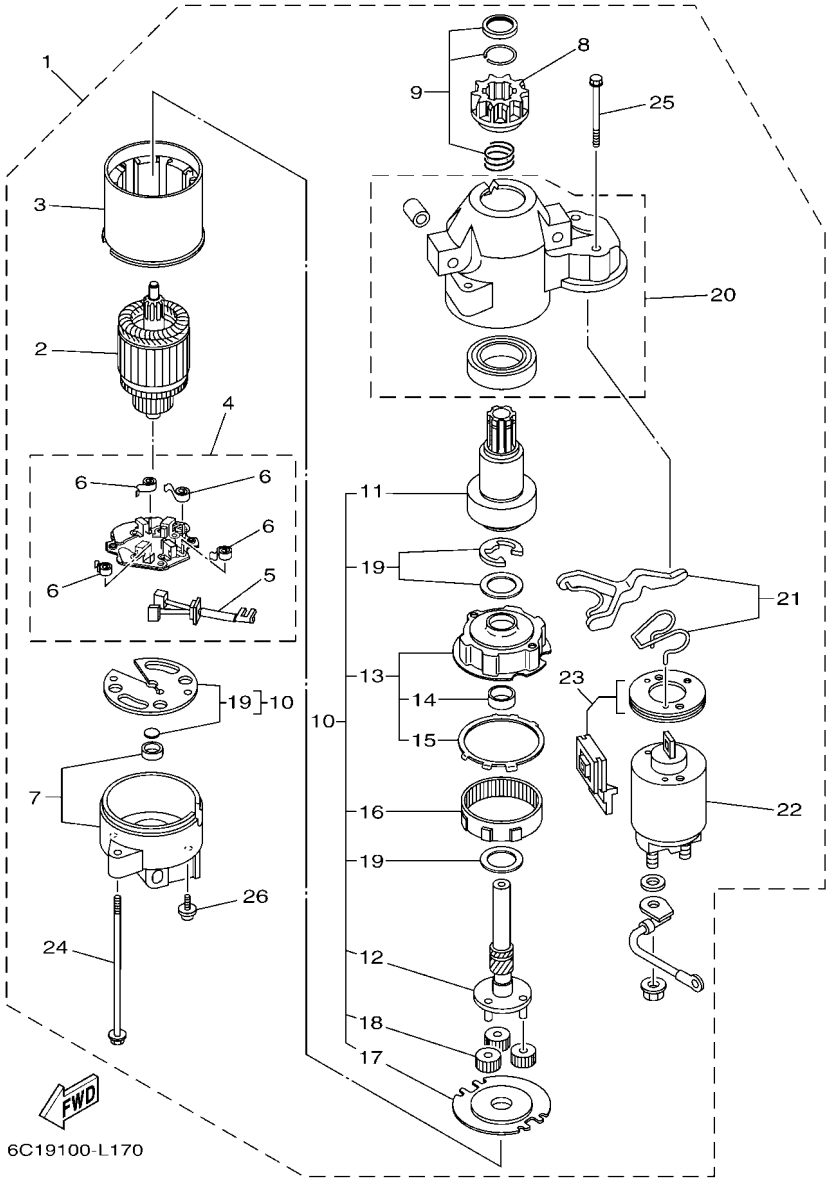

FIG. 18 STARTING MOTOR — DEMARREUR ELECTRIQUE

REF. NO.	PART NO. N° PIECES	DESCRIPTION DESCRIPTION	ED	ET				REMARKS REMARQUES
1	6CJ–81800–01	STARTING MOTOR ASSY DEMARREUR ELECTRIQUE COMPLET	1	1				
2	67F–81850–00	.ARMATURE ASSY .INDUIT	1	1				
3	67F–81810–00	.STATOR ASSY .STATOR COMPLET	1	1				
4	69J–81840–11	.BRUSH HOLDER ASSY .SUPPORT DE CHARBON	1	1				
5	69J–81801–11	..BRUSH SET ..JEU DE BROSSE	1	1				
6	67F–81813–00	..SPRING, BRUSH ..RESSORT, DE CHARBON	4	4				
7	68F–81820–00	.REAR BRACKET ASSY .SUPPORT ARRIERE COMPLET	1	1				
8	67F–81808–00	.PINION ASSY .PIGNON	1	1				
9	67F–81857–00	.PINION STOPPER SET .BUTEE PIGNON	1	1				
10	67F–81807–00	.GEAR ASSY, STARTING MOTOR .PIGNON, DEMARREUR ELECTRIQUE	1	1				
11	67F–81832–00	..CLUTCH, OVER RUN ..EMBRAYAGE, ROUE LIBRE	1	1				
12	67F–81836–00	..SHAFT, PINION ..AXE, PIGNON	1	1				
13	67F–81821–00	..BRACKET, CENTER 1 ..SUPPORT, CENTRE 1	1	1				
14	67F–81841–00	...BEARING ...ROULEMENT	1	1				
15	67F–8183R–00	...GASKET ...JOINT	1	1				
16	67F–81891–00	..GEAR, RING ..ROUE DENTEE	1	1				WITH 67F-8183R-00 WITH 67F-8183R-00
17	67F–81830–00	..BRACKET, CENTER 2 ..SUPPORT, CENTRE 2	1	1				
18	60V–8183T–00	..GEAR, IDLER ..PIGNON, INTERMEDIAIRE	3	3				
19	67F–81809–00	..WASHER KIT ..JEU DE RONDELLES	1	1				
20	60X–81842–00	.COVER .COUVERCLE	1	1				
21	6C5–81839–00	.LEVER ASSY .LEVIER COMPLET	1	1				
22	6C5–81941–00	.STARTER RELAY ASSY .LANCEUR RELAIS (ENS.)	1	1				
23	6C5–81869–00	.COVER, DUST .COUVERCLE, POUSSIERE	1	1				
24	6K7–81826–11	.BOLT .BOULON	2	2				
25	69J–81828–00	.BOLT 2 .BOULON 2	2	2				
26	67F–81846–00	.SCREW .VIS	2	2				

FIG. 19 BOTTOM COWLING 1 — CAPOT INFERIEUR 1

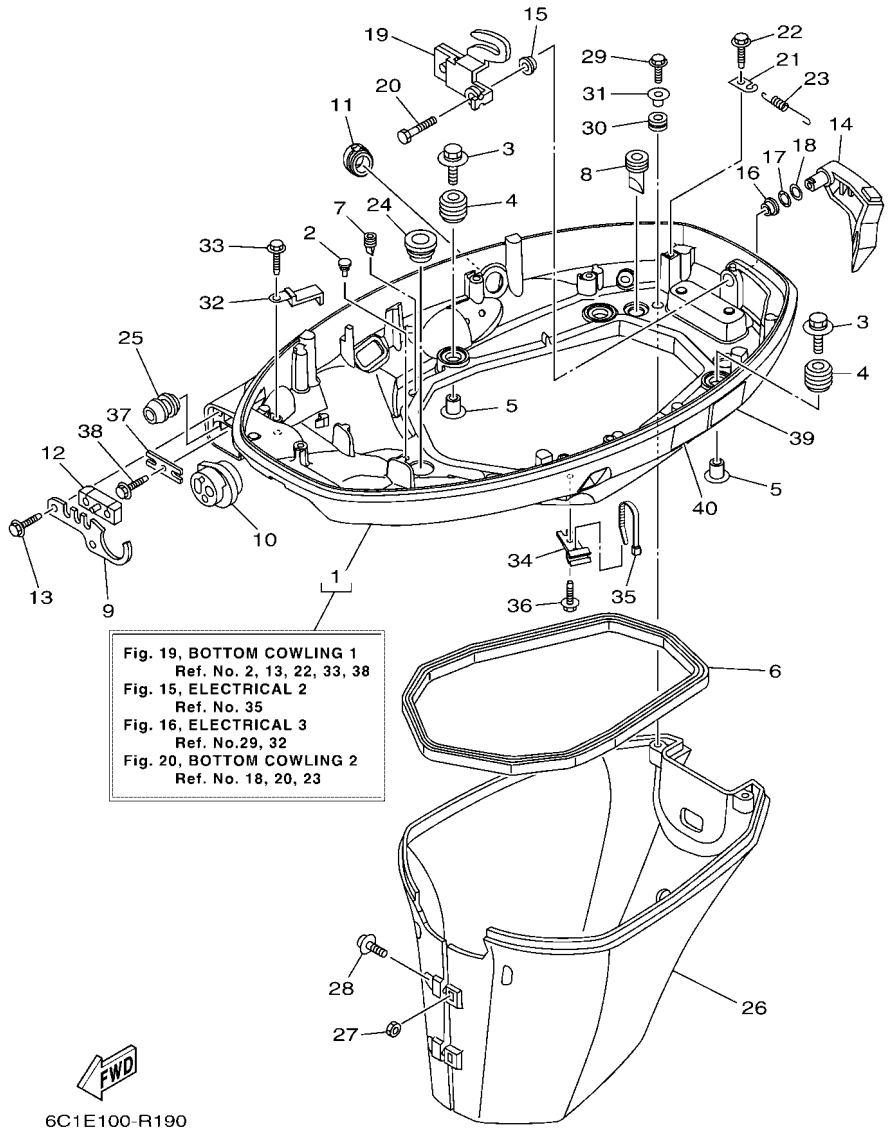

REF. NO.	PART NO. N° PIECES	DESCRIPTION DESCRIPTION	ED	ET				REMARKS REMARQUES
1	6CJ–42710–02–8D	BOTTOM COWLING ASSY ENS. EMBASE	1	1				
2	6H4–42748–01	GROMMET PASSE-FIL	3	3				
3	90119–06291	BOLT, WITH WASHER BOULON, AVEC RONDELLE	4	4				
4	6BG–42748–01	GROMMET PASSE-FIL	4	4				
5	90387–06M69	COLLAR COLLERETTE	4	4				
6	62Y–42716–01	RUBBER SEAL 1 JOINT EN CAOUTCHOUC 1	1	1				
7	65W–42717–00	RUBBER, SEAL 2 JOINT EN CAOUTCHOUC 2	2	2				
8	61A–42717–00	RUBBER, SEAL 2 JOINT EN CAOUTCHOUC 2	2	2				
9	6BG–42761–00	STOPPER PLAQUETTE	1	1				
10	6CJ–42725–01	GROMMET PASSE-FIL	1	1				
11	6CJ–42726–10	GROMMET PASSE-FIL	1	1				
12	6BG–42727–01	GROMMET PASSE-FIL	1	1				
13	90109–06M86	BOLT BOULON	2	2				
14	6BG–42815–00–8D	LEVER, CLAMP 1 LEVIER, PRESSE 1	1	1				
15	90386–12M37	BUSH DOUILLE	1	1				
16	90386–12MA2	BUSH DOUILLE	1	1				
17	90206–12052	WASHER, WAVE RONDELLE, ONDULEE	1	1				
18	90201–12M07	WASHER, PLATE RONDELLE, PLATE	1	1				
19	6BG–42816–00	LEVER, CLAMP 2 LEVIER, PRESSE 2	1	1				
20	97D95–06014	BOLT, HEXAGON DEEP RECESS VIS HEXAGONAL	1	1				
21	66T–43144–00	HOOK, SPRING CROCHET	1	1				
22	90109–06M86	BOLT BOULON	1	1				
23	90506–18023	SPRING, TENSION RESSORT, TENSION	1	1				
24	68U–42727–01	GROMMET PASSE-FIL	1	1				
25	6BG–24329–01	SEAL JOINT	1	1				
26	6BG–42741–10–8D	APRON CAPOT LATERAL	1	1				
27	95380–06600	NUT, HEXAGON ECROU	2	2				

FIG. 19 BOTTOM COWLING 1 — CAPOT INFERIEUR 1

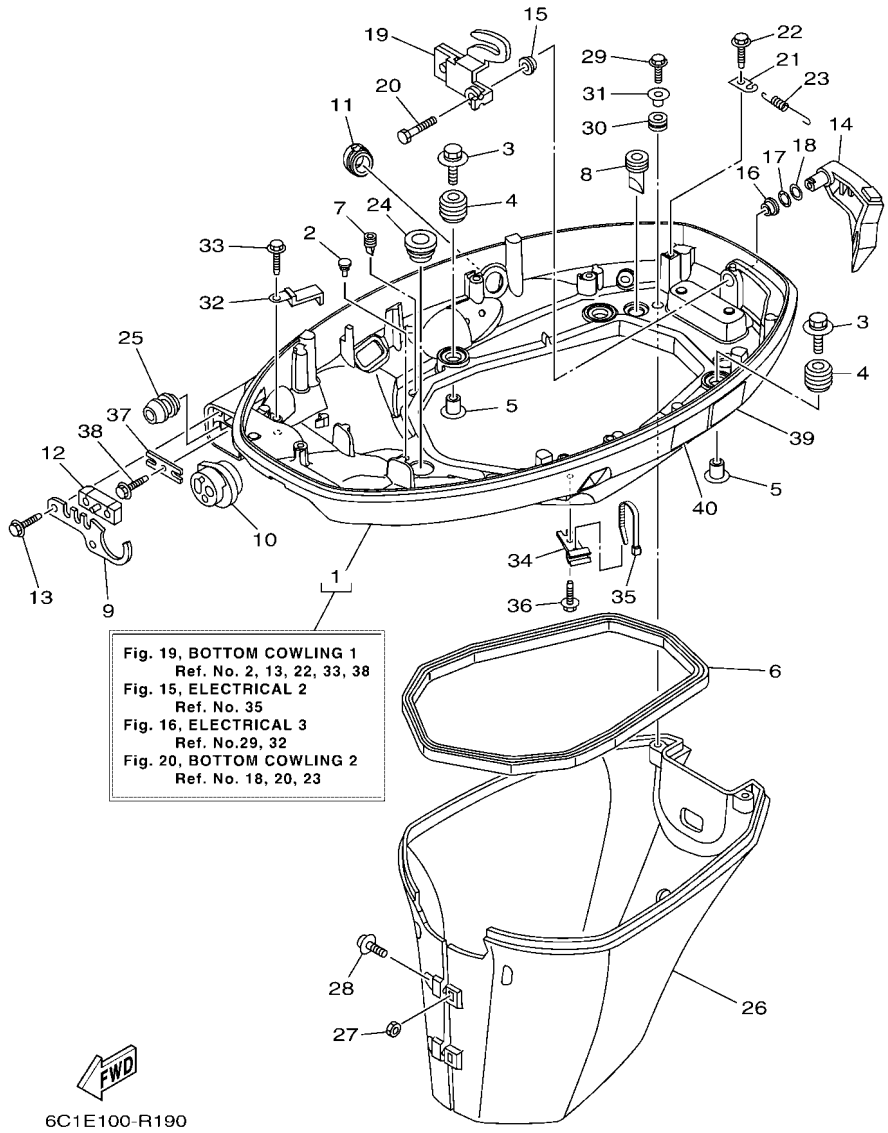

REF. NO.	PART NO. N° PIECES	DESCRIPTION DESCRIPTION	ED	ET				REMARKS REMARQUES
28	97980–06325	SCREW, WITH WASHER VIS, AVEC RONDELLE	2	2				
29	90109–06M80	BOLT BOULON	2	2				
30	90480–13M24	GROMMET PASSE-FIL	2	2				
31	90387–06M43	COLLAR COLLERETTE	2	2				
32	90462–20005	CLAMP BRIDE	1	1				
33	90109–06M86	BOLT BOULON	1	1				
34	90464–09M49	CLAMP BRIDE	1	1				
35	90465–11M10	CLAMP BRIDE	1	1				
36	90109–06M86	BOLT BOULON	1	1				
37	6BG–48538–00	CLAMP, CABLE 1 COLLIER	1	1				
38	90109–06M86	BOLT BOULON	1	1				
39	6EE–42794–40	LABEL, WARNING (GENERAL) ETIQUETTE, AVERTISSEMENT	1	1				
40	6EE–42794–50	LABEL, WARNING (GENERAL) ETIQUETTE, AVERTISSEMENT	1	1				

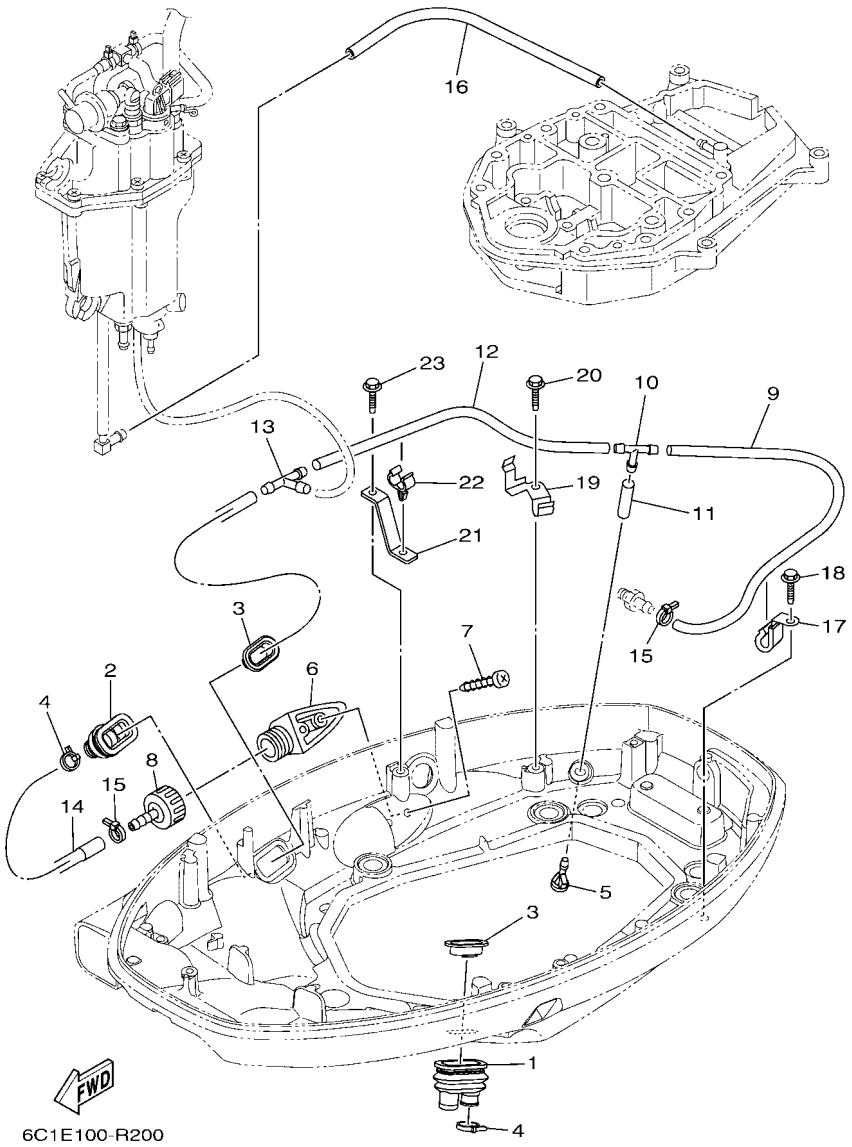

FIG. 20 BOTTOM COWLING 2 — CAPOT INFERIEUR 2

REF. NO.	PART NO. N° PIECES	DESCRIPTION DESCRIPTION	ED	ET				REMARKS REMARQUES
1	6H1–42726–31	GROMMET PASSE-FIL	1	1				
2	6BG–42724–01	GROMMET PASSE-FIL	1	1				
3	6BG–42384–00	SEAL, CAP JOINT, CAPUCHON	2	2				
4	90465–11M10	CLAMP BRIDE	2	2				
5	6BL–44391–00	NIPPLE, HOSE RACCORD D'ESSENCE	1	1				
6	6AW–12572–00	ADAPTER ADAPTATEUR	1	1				
7	97780–60520	SCREW, TAPPING VIS, TETE BOMBEE	2	2				
8	6R3–12580–00	JOINT ASSY ARTICULER (ENS.)	1	1				
9	90445–09036	HOSE (L400) DURITE (L400)	1	1				
10	688–24378–00	PIPE, JOINT 3 DURITE RACCORDEMENT 3	1	1				
11	90445–09220	HOSE (L30) DURITE (L30)	1	1				
12	90445–096H2	HOSE (L280) DURITE (L280)	1	1				
13	688–24378–00	PIPE, JOINT 3 DURITE RACCORDEMENT 3	1	1				
14	6BG–12481–00	PIPE 1 DURITE 1	1	1				
15	90465–11M10	CLAMP BRIDE	2	2				
16	90445–09304	HOSE (L310) DURITE (L310)	1	1				
17	90462–08067	CLAMP BRIDE	1	1				
18	90109–06M86	BOLT BOULON	1	1				
19	6BG–24136–01	CLAMP 2 COLLIER 2	1	1				
20	90109–06M86	BOLT BOULON	1	1				
21	6CJ–24135–00	CLAMP 1 COLLIER 1	1	1				
22	90464–09130	CLAMP BRIDE	1	1				
23	90109–06M86	BOLT BOULON	1	1				

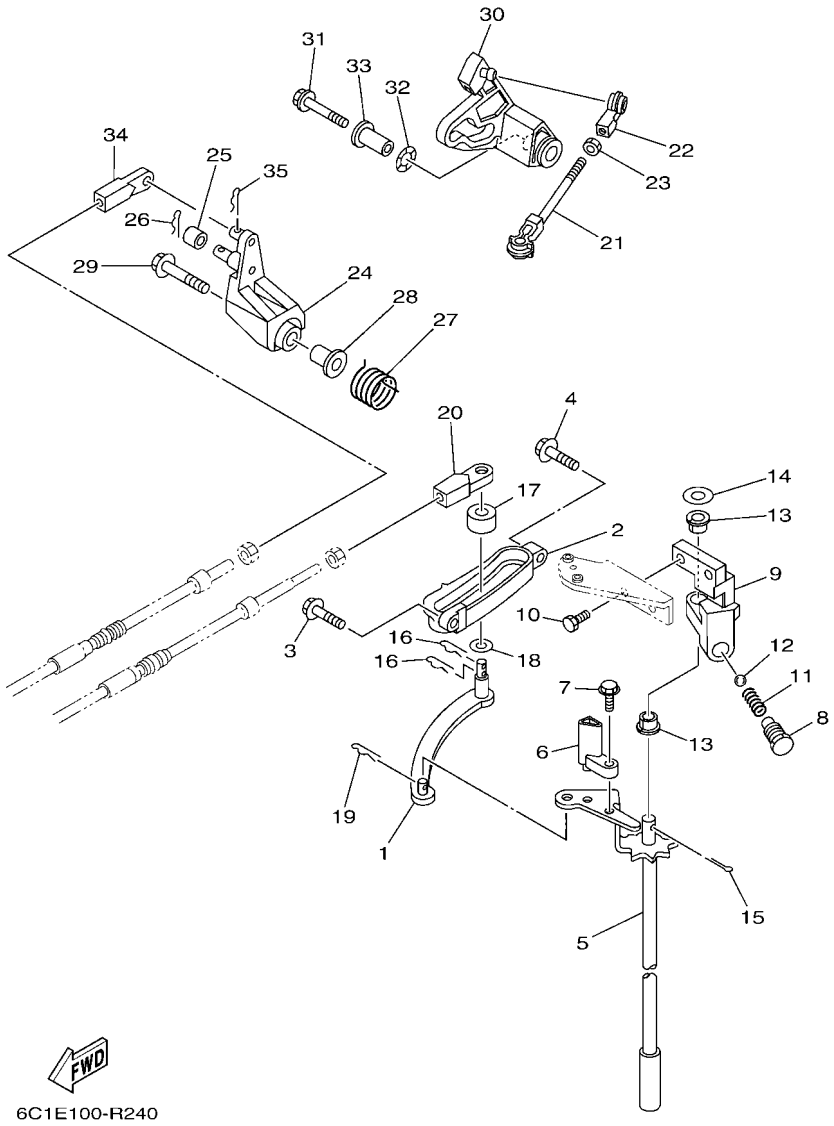

FIG. 21 CONTROL — COMMANDE

REF. NO.	PART NO. N° PIECES	DESCRIPTION DESCRIPTION	ED	ET				REMARKS REMARQUES
1	69W–44121–00	LEVER, SHIFT ROD LEVIER, TIGE D'INVERSION	1	1				
2	62Y–44117–01	BRACKET SUPPORT	1	1				
3	97E95–06520	BOLT, HEXAGON W/W DEEP RECESS VIS HEXAGONAL AVC RONDELLE	1	1				
4	97E95–06525	BOLT, HEXAGON W/W DEEP RECESS VIS HEXAGONAL AVC RONDELLE	1	1				
5	6C5–44120–03	HANDLE GEAR SHIFT ASSY LEVIER D'EMBRAYAGE	1	1				L(20.7") L(20.7")
6	6C5–44122–00	BUSHING, SHIFT ROD LEVER DOUILLE, LEVIER D'EMBRAYAGE	1	1				
7	97595–05514	BOLT, WITH WASHER VIS HEXAGONAL AVC RONDELLE	1	1				
8	62Y–42715–01	BUSHING 2 COUSSINET 2	1	1				
9	62Y–44118–00–94	BRACKET SUPPORT	1	1				
10	90101–06063	BOLT BOULON	2	2				
11	90501–12082	SPRING, COMPRESSION RESSORT, COMPRESSION	1	1				
12	93501–04M02	BALL BILLE	1	1				
13	90386–90M90	BUSH DOUILLE	2	2				
14	90201–10M20	WASHER, PLATE RONDELLE, PLATE	1	1				
15	91490–20015	PIN. COTTER GOUPILLE	1	1				
16	90468–18008	CLIP JONC	2	2				
17	688–44122–00	BUSHING, SHIFT ROD LEVER DOUILLE, LEVIER D'EMBRAYAGE	1	1				
18	90202–07M07	WASHER, PLATE RONDELLE, PLATE	1	1				
19	90468–18008	CLIP JONC	1	1				
20	69W–48344–00	CABLE END, REMOTE CONTROL CHAPE CABLE	1	1				
21	688–41211–01	LINK, ACCEL. BIELLETTE, ACCELERATION	1	1				
22	6H4–41237–00	JOINT, LINK RACCORD	1	1				
23	95380–05700	NUT ECROU	1	1				
24	62Y–42154–A0	LEVER, THROTTLE CONTROL LEVIER DE COMMANDE D'AVANCE	1	1				
25	6C5–42171–00	BUSHING COUSSINET	1	1				
26	91490–16010	PIN. COTTER GOUPILLE	1	1				
27	62Y–44135–00	SPRING RESSORT	1	1				

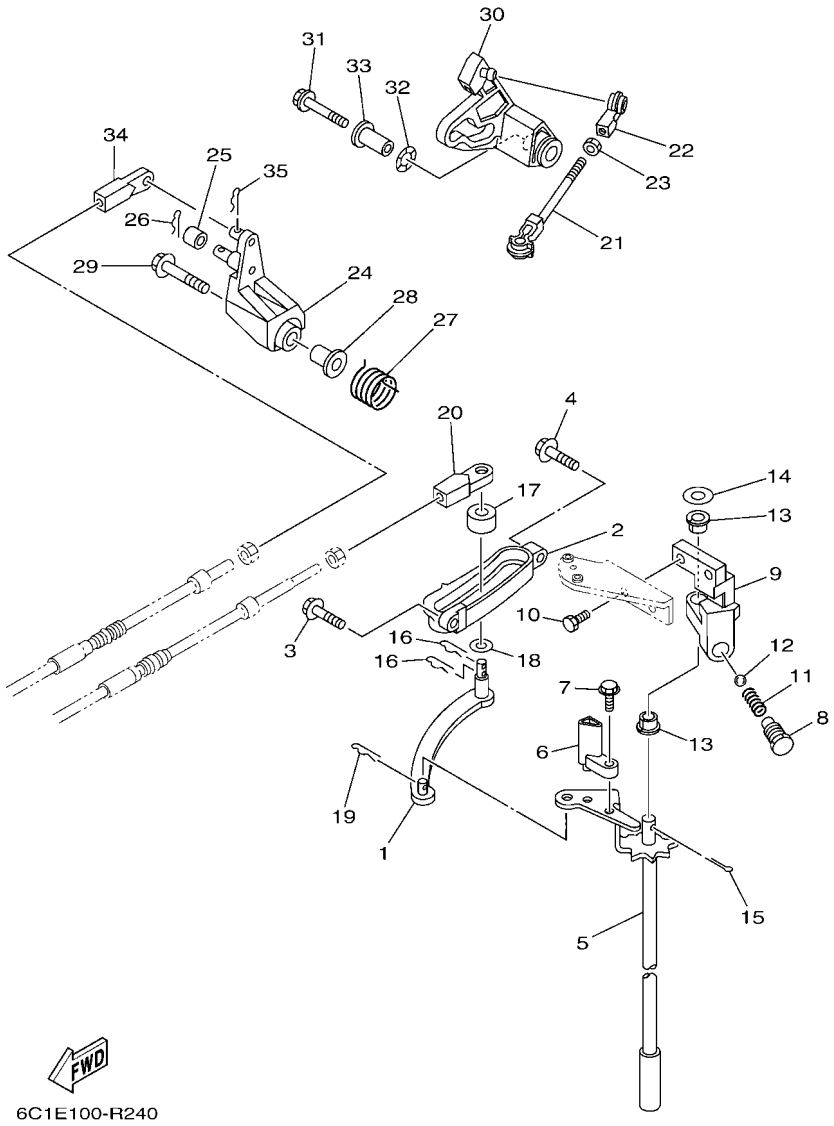

FIG. 21 CONTROL — COMMANDE

REF. NO.	PART NO. N° PIECES	DESCRIPTION DESCRIPTION	ED	ET				REMARKS REMARQUES
28	90387–06M45	COLLAR COLLERETTE	1	1				
29	90119–06297	BOLT, WITH WASHER BOULON, AVEC RONDELLE	1	1				
30	6C5–42335–00	LEVER, ACCEL. CONTROL LEVIER, ACCELERATION	1	1				
31	95D95–06035	BOLT, FLANGE DEEP RECESS BOULON FIXATION	1	1				
32	90206–10M04	WASHER, WAVE RONDELLE, ONDULEE	1	1				
33	90387–06M82	COLLAR COLLERETTE	1	1				
34	69W–48344–00	CABLE END, REMOTE CONTROL CHAPE CABLE	1	1				
35	90468–18008	CLIP JONC	1	1				

FIG. 22 BRACKET 1 SUPPORT 1

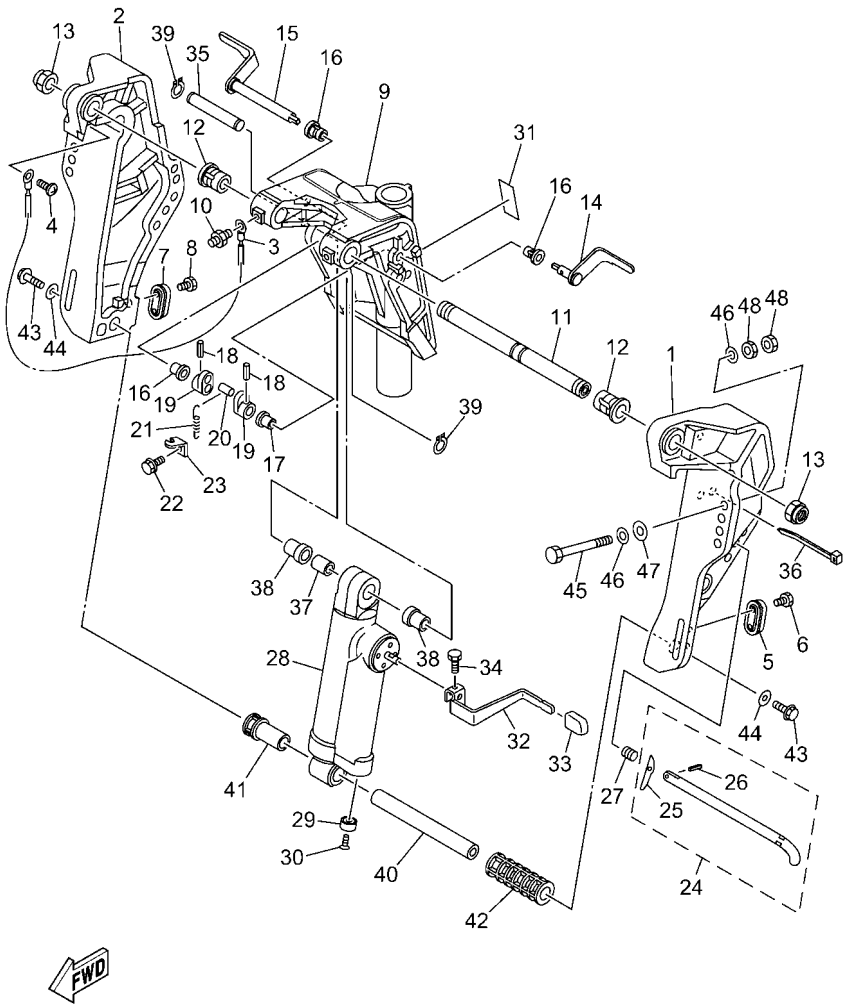

6C1L300-X220

REF. NO.	PART NO. N° PIECES	DESCRIPTION DESCRIPTION	ED	ET				REMARKS REMARQUES
1	6C1–43111–00–8D	BRACKET, CLAMP 1 PRESSE 1	1					
2	6C1–43112–00–8D	BRACKET, CLAMP 2 PRESSE 2	1					
3	6E5–82148–00	WIRE, LEAD 4 FIL 4	1					
4	97885–06008	SCREW, PAN HEAD VIS, A ENCOCHE	1					
5	65W–45251–00	ANODE ANODE	1					
6	90101–06020	BOLT BOULON	2					
7	65W–45251–00	ANODE ANODE	1					
8	90101–06020	BOLT BOULON	2					
9	6C5–43311–01–8D	BRACKET, SWIVEL 1 SUPPORT, PIVOT 1	1					
10	93700–06002	NIPPLE, GREASE PION	3					
11	63D–43131–01	BOLT, CLAMP BRACKET BOULON, PRESSE	1					
12	90386–22MA4	BUSH DOUILLE	2					
13	90185–22M11	NUT, SELF-LOCKING ECROU,AUTO-BLOQUANT	2					
14	6C5–43181–00	LEVER, TILT STOP 1 LEVIER VERROUILLAGE RELEVAGE 1	1					
15	6C5–43185–00	LEVER, TILT STOP 2 LEVIER VERROUILLAGE RELEVAGE 2	1					
16	90386–10M16	BUSH DOUILLE	3					
17	90386–10025	BUSH DOUILLE	1					
18	91690–30020	PIN, SPRING AGRAFFE	2					
19	6G5–43148–00	COLLAR, DISTANCE ENTRETOISE	2					
20	90249–06M19	PIN GOUPILLE	1					
21	90506–14M24	SPRING, TENSION RESSORT, TENSION	1					
22	97E95–06512	BOLT, HEXAGON W/W DEEP RECESS VIS HEXAGONAL AVC RONDELLE	1					
23	6G5–43144–00	HOOK, SPRING CROCHET	1					
24	688–43160–01	TILT ROD ASSY BROCHE D'INCLINAISON (ENS.)	1					
25	688–43165–00	.PLATE, TILT LOCK .TAQUET, BROCHE INCLINAISON	1					
26	91690–30012	.PIN, SPRING .AGRAFFE	1					
27	90502–16M02	SPRING, CONICAL RESSORT, CONIQUE	1					

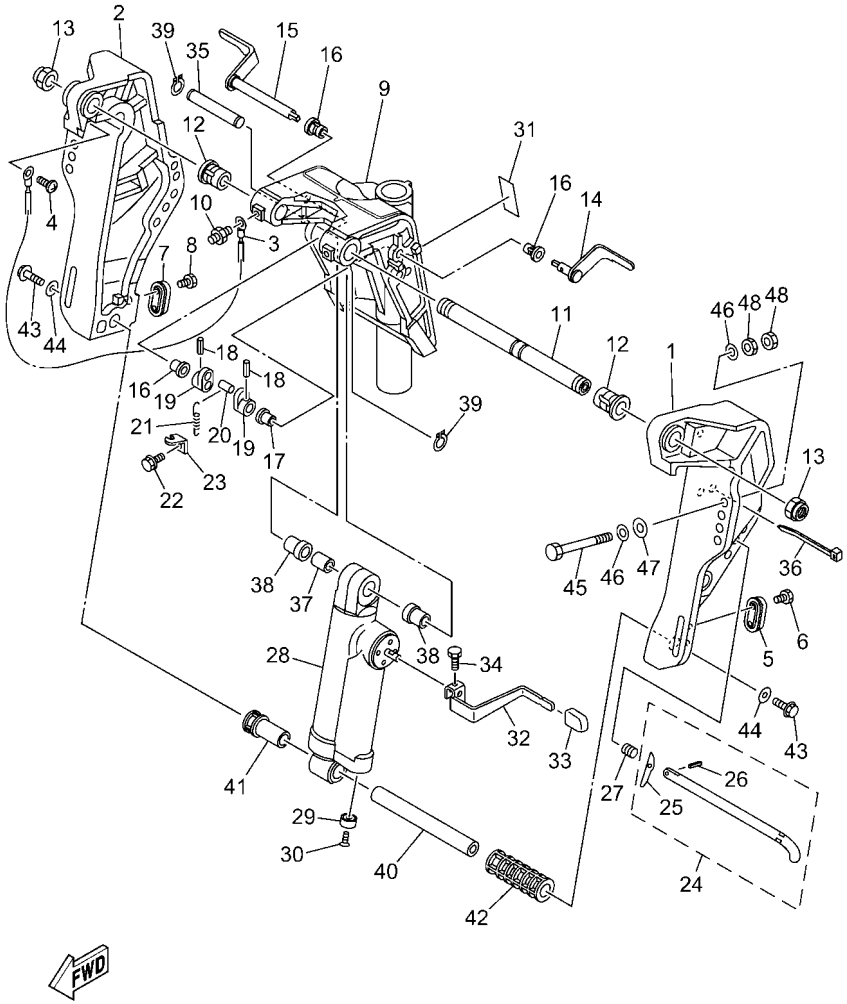

6C1L300-X220

FIG. 22 BRACKET 1 — SUPPORT 1

REF. NO.	PART NO. N° PIECES	DESCRIPTION DESCRIPTION	ED	ET				REMARKS REMARQUES
28	64J–43107–02–8D	SHOCK ABSORBER SUB-ASSY AMORTISSEUR (ENS.)	1					
29	663–45251–00	ANODE ANODE	1					
30	90152–06M01	SCREW, COUNTERSUNK VIS, TETE NOYEE	1					
31	63D–43691–00	INDICATOR, TILT ETIQUETTE, RELEVAGE	1					
32	6C1–43631–00	LEVER, TILT LEVIER, INCLINAISON	1					
33	682–43318–01	COVER CAPUCHON	1					
34	97D95–06010	BOLT, HEXAGON DEEP RECESS VIS HEXAGONAL	1					
35	69D–43126–01	PIN, UPPER SHOCK MOUNT AXE, SUPERIEUR AMORTISSEUR	1					
36	90464–99004	CLAMP BRIDE	1					
37	90387–16003	COLLAR COLLERETTE	1					
38	90387–16004	COLLAR COLLERETTE	2					
39	93410–16097	CIRCLIP CIRCLIP	2					
40	6CJ–43818–00	PIN, LOWER SHOCK MOUNT AXE, INFERIEUR AMORTISSEUR	1					
41	6C5–43833–00	PIPE TUYAU	1					
42	6C5–43834–00	PIPE TUYAU	1					
43	90119–10054	BOLT, WITH WASHER BOULON, AVEC RONDELLE	2					
44	90201–10060	WASHER, PLATE RONDELLE, PLATE	2					
45	90101–12063	BOLT (L:105MM) BOULON (L:105MM)	4					
46	90201–12062	WASHER, PLATE RONDELLE, PLATE	8					
47	90201–12426	WASHER, PLATE RONDELLE, PLATE	4					
48	95380–12600	NUT ECROU	8					

FIG. 23 BRACKET 2 SUPPORT 2

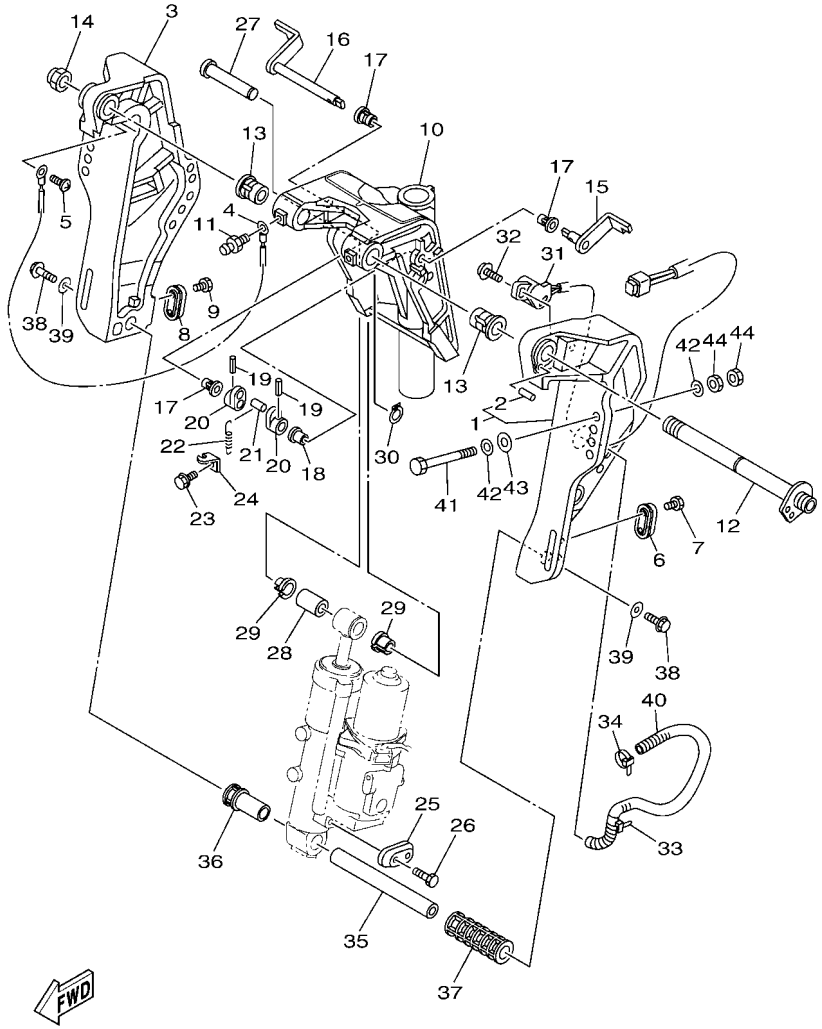

6C1L110-X220

REF. NO.	PART NO. N° PIECES	DESCRIPTION DESCRIPTION	ED	ET				REMARKS REMARQUES
1	6C5–43111–10–8D	BRACKET, CLAMP 1 PRESSE 1		1				FOR TILT LIMIT FOR TILT LIMIT
2	93606–19002	.PIN, DOWEL .GOUPILLE		1				
3	6C5–43112–01–8D	BRACKET, CLAMP 2 PRESSE 2		1				
4	6E5–82148–00	WIRE, LEAD 4 FIL 4		1				
5	97885–06008	SCREW, PAN HEAD VIS, A ENCOCHE		1				
6	65W–45251–00	ANODE ANODE		1				
7	90101–06020	BOLT BOULON		2				
8	65W–45251–00	ANODE ANODE		1				
9	90101–06020	BOLT BOULON		2				
10	6C5–43311–01–8D	BRACKET, SWIVEL 1 SUPPORT, PIVOT 1		1				
11	93700–06002	NIPPLE, GREASE PION		3				
12	6C5–43131–00	BOLT, CLAMP BRACKET BOULON, PRESSE		1				FOR TILT LIMIT FOR TILT LIMIT
13	90386–22MA4	BUSH DOUILLE		2				
14	90185–22M11	NUT, SELF-LOCKING ECROU,AUTO-BLOQUANT		1				FOR TILT LIMIT FOR TILT LIMIT
15	6C5–43181–00	LEVER, TILT STOP 1 LEVIER VERROUILLAGE RELEVAGE 1		1				
16	6C5–43185–00	LEVER, TILT STOP 2 LEVIER VERROUILLAGE RELEVAGE 2		1				
17	90386–10M16	BUSH DOUILLE		3				
18	90386–10025	BUSH DOUILLE		1				
19	91690–30020	PIN, SPRING AGRAFFE		2				
20	6G5–43148–00	COLLAR, DISTANCE ENTRETOISE		2				
21	90249–06M19	PIN GOUPILLE		1				
22	90506–14M24	SPRING, TENSION RESSORT, TENSION		1				
23	97E95–06512	BOLT, HEXAGON W/W DEEP RECESS VIS HEXAGONAL AVC RONDELLE		1				
24	6G5–43144–00	HOOK, SPRING CROCHET		1				
25	65W–45251–00	ANODE ANODE		1				
26	90101–06020	BOLT BOULON		2				
27	6E5–43126–02	PIN, UPPER SHOCK MOUNT AXE, SUPERIEUR AMORTISSEUR		1				

FIG. 23 BRACKET 2 SUPPORT 2

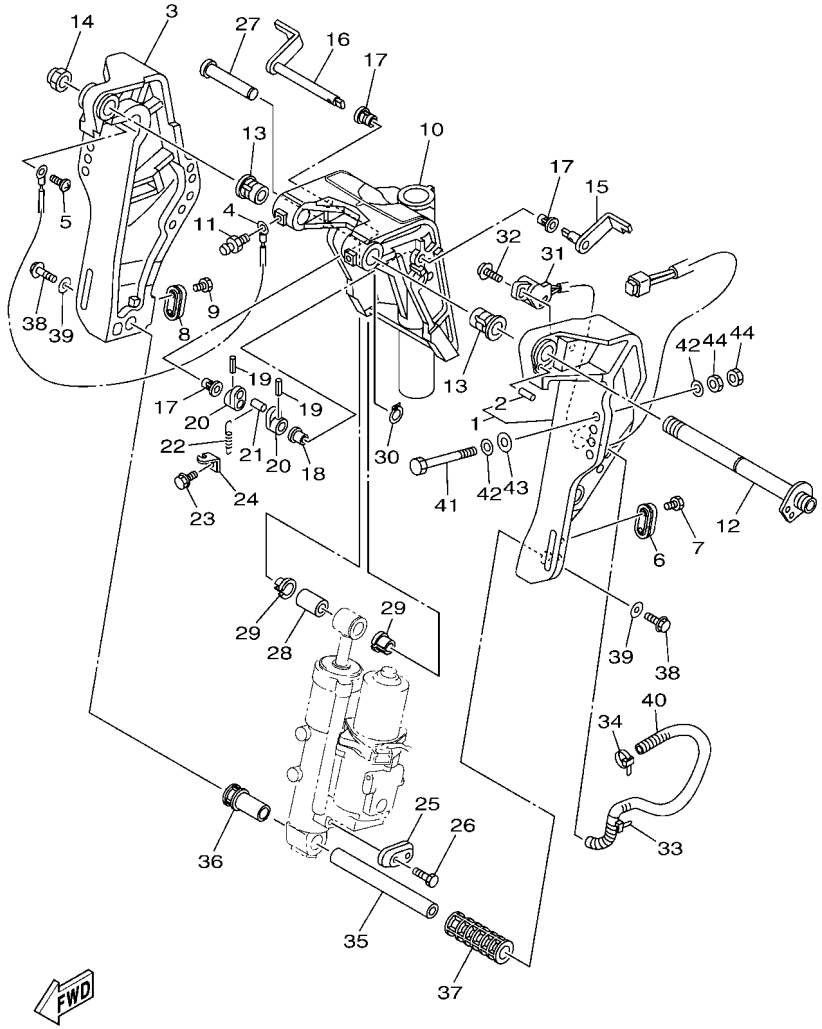

REF. NO.	PART NO. N° PIECES	DESCRIPTION DESCRIPTION	ED	ET				REMARKS REMARQUES
28	90386–18M92	BUSH DOUILLE		1				
29	90386–18M35	BUSH DOUILLE		2				
30	93410–18M05	CIRCLIP CIRCLIP		1				
31	63D–83672–11	TRIM SENDER INCLINER RACCORD		1				
32	97985–06216	SCREW, WITH WASHER VIS, AVEC RONDELLE		2				
33	90464–99004	CLAMP BRIDE		1				
34	90465–11M10	CLAMP BRIDE		1				
35	6CJ–43818–00	PIN, LOWER SHOCK MOUNT AXE, INFERIEUR AMORTISSEUR		1				
36	6C5–43833–00	PIPE TUYAU		1				
37	6C5–43834–00	PIPE TUYAU		1				
38	90119–10054	BOLT, WITH WASHER BOULON, AVEC RONDELLE		2				
39	90201–10060	WASHER, PLATE RONDELLE, PLATE		2				
40	90447–19009	TUBE DURITE		1				
41	90101–12063	BOLT (L:105MM) BOULON (L:105MM)		4				
42	90201–12062	WASHER, PLATE RONDELLE, PLATE		8				
43	90201–12426	WASHER, PLATE RONDELLE, PLATE		4				
44	95380–12600	NUT ECROU		8				

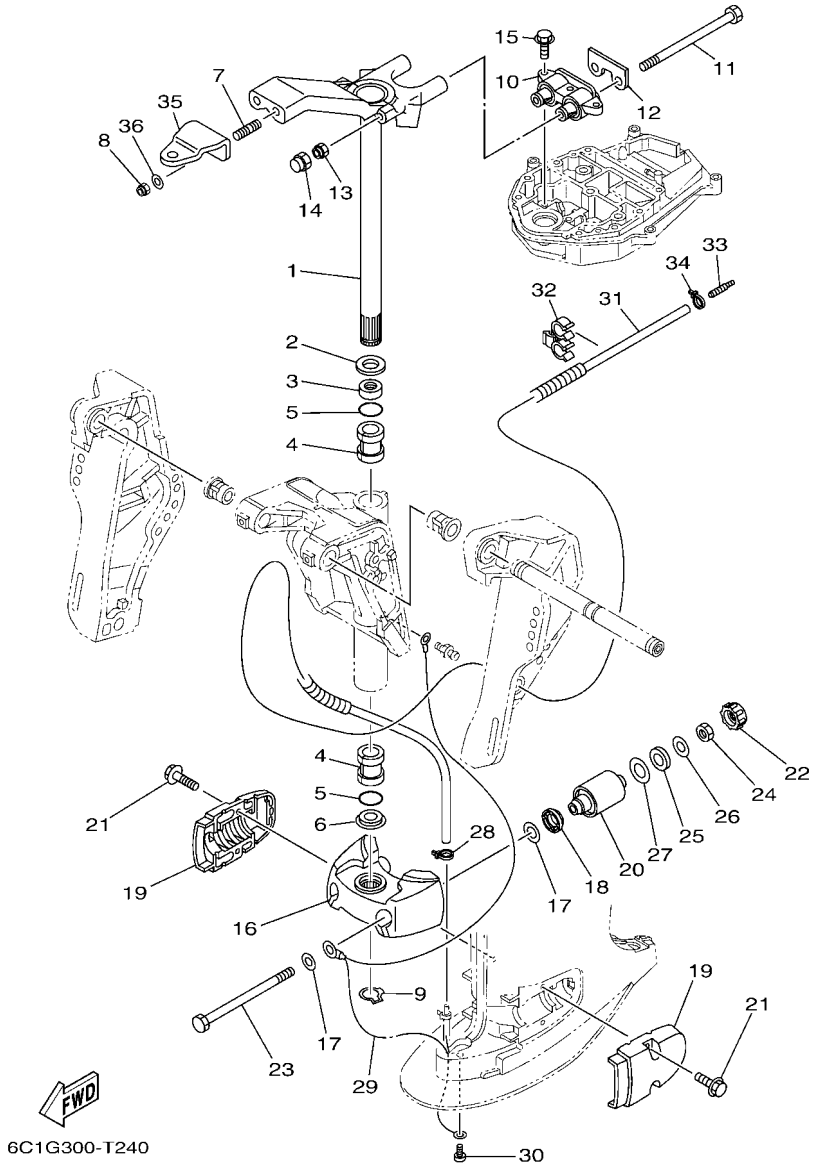

FIG. 24 BRACKET 3 SUPPORT 3

REF. NO.	PART NO. N° PIECES	DESCRIPTION DESCRIPTION	ED	ET				REMARKS REMARQUES
1	69W–42510–01–8D	STEERING BRACKET ASSY DIRECTION SUPPORT (ENS.)	1	1				
2	90201–30M00	WASHER, PLATE RONDELLE, PLATE	1	1				
3	90386–30M78	BUSH DOUILLE	1	1				
4	90386–30M77	BUSH DOUILLE	2	2				
5	93210–29M94	O-RING JOINT TORIQUE	2	2				
6	90386–30M60	BUSH DOUILLE	1	1				
7	90116–10063	BOLT, STUD GOUJON	2	2				
8	90185–10027	NUT, SELF-LOCKING ECROU,AUTO-BLOQUANT	2	2				
9	93410–28M06	CIRCLIP CIRCLIP	1	1				
10	69W–44514–00	MOUNT DAMPER, UPPER SIDE SILENT-BLOC, SUPERIEUR LATERAL	1	1				L(20.7") L(20.7")
11	90109–08229	BOLT BOULON	2	2				
12	69W–44526–01	PLATE PLAQUE	1	1				
13	90185–08018	NUT, SELF-LOCKING ECROU,AUTO-BLOQUANT	2	2				
14	6C5–44194–00	CAP CAPUCHON	2	2				
15	97E75–08530	BOLT, HEXAGON W/W DEEP RECESS VIS HEXAGONAL AVC RONDELLE	3	3				
16	6C5–44551–00–8D	HOUSING, LOWER MOUNT RUBBER 1 BOITIER, SILENT-BLOC INFERIEUR	1	1				
17	90201–12M16	WASHER, PLATE RONDELLE, PLATE	4	4				
18	6C5–43885–01	GROMMET PASSE-FIL	2	2				
19	6C5–44552–00–8D	HOUSING, LOWER MOUNT RUBBER 2 BOITIER, SILENT-BLOC INFERIEUR	2	2				
20	69W–44555–00	MOUNT DAMPER, LOWER SIDE SILENT-BLOC, INFERIEUR LATERAL	2	2				
21	90119–08094	BOLT, WITH WASHER BOULON, AVEC RONDELLE	4	4				
22	6C5–44575–00	DAMPER, LOWER MOUNT RUBBER SILENT-BLOC, INFERIEUR	2	2				
23	90109–12MA3	BOLT BOULON	2	2				
24	95380–12700	NUT ECROU	2	2				
25	90202–21100	WASHER, PLATE RONDELLE, PLATE	2	2				
26	90201–13M19	WASHER, PLATE RONDELLE, PLATE	2	2				
27	90201–22M05	WASHER, PLATE RONDELLE, PLATE	2	2				

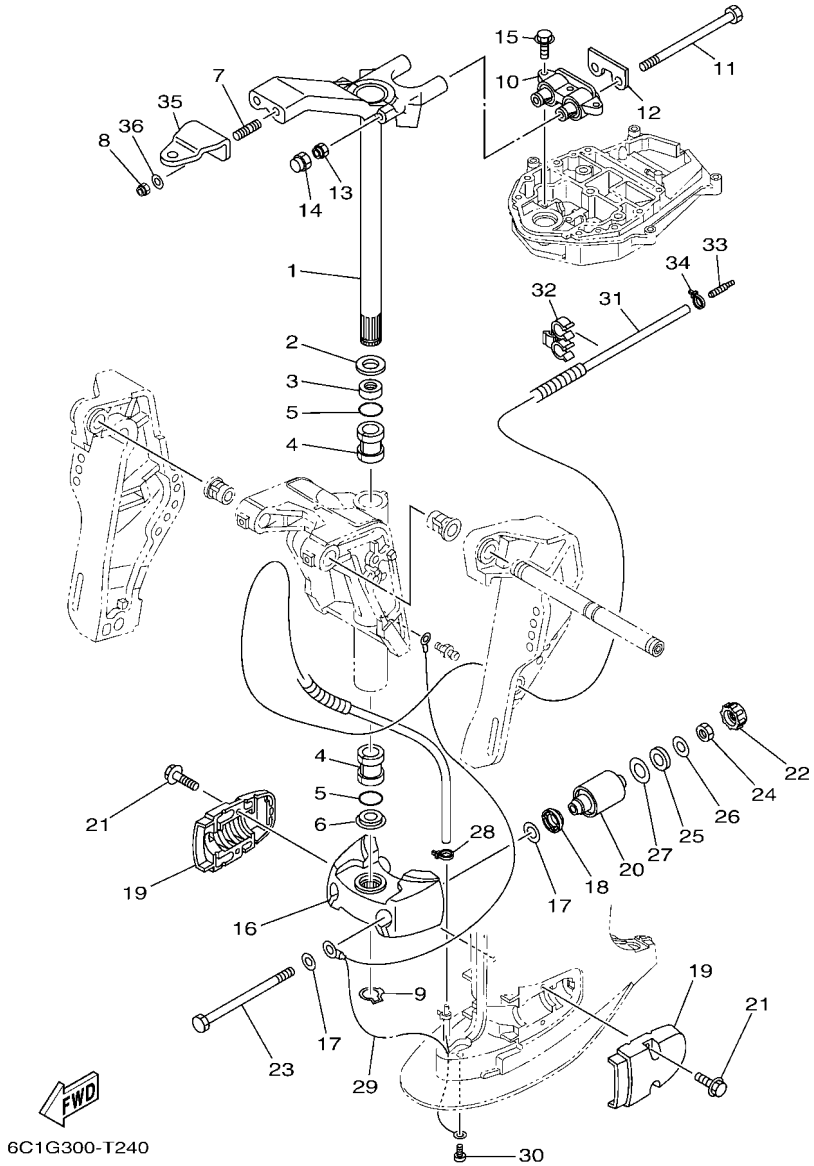

FIG. 24 BRACKET 3 — SUPPORT 3

REF. NO.	PART NO. N° PIECES	DESCRIPTION DESCRIPTION	ED	ET				REMARKS REMARQUES
28	90465–11M10	CLAMP BRIDE	1	1				
29	67C–82127–10	WIRE, LEAD 2 FIL 2	1	1				
30	97885–06008	SCREW, PAN HEAD VIS, A ENCOCHE	1	1				
31	6CJ–44385–00	HOSE, WATER 1 TUBE D'EAU 1	1	1				
32	90464–10006	CLAMP BRIDE	1	1				
33	6E5–83558–00	END, NIPPLE RACCORD DE NIPPLE	1	1				
34	90465–11M10	CLAMP BRIDE	1	1				
35	65W–48511–01	HOOK, STEERING ATTACHE, DIRECTION	1	1				
36	90201–10049	WASHER, PLATE RONDELLE, PLATE	2	2				

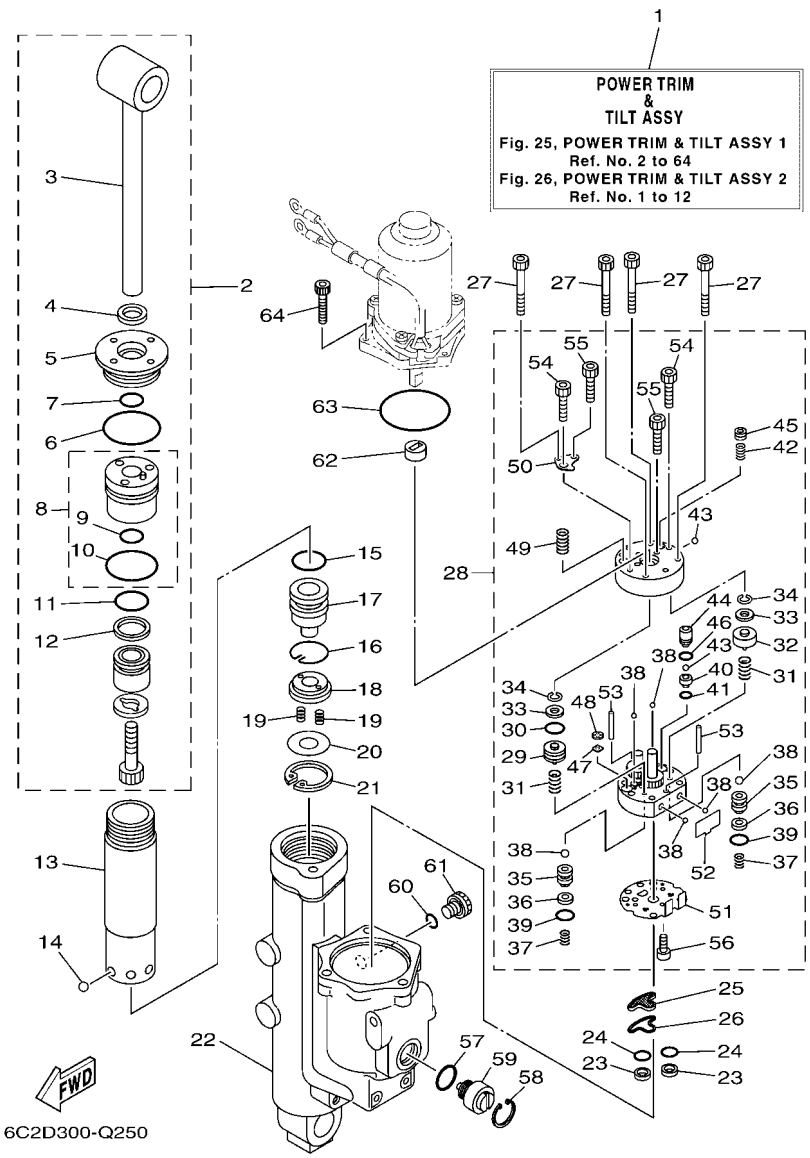

FIG. 25 POWER TRIM & TILT ASSY 1 — PUISSANCE PARER ET INCLINER 1

REF. NO.	PART NO. N° PIECES	DESCRIPTION DESCRIPTION	ED	ET				REMARKS REMARQUES
1	6C5–43800–13	POWER TRIM & TILT ASSY PUISSANCE PARER ET INCLINER (E		1				
2	6CJ–43810–10	TILT PISTON SUB ASSY INCLINER PISTON AUXILIAIRE(ENS		1				
3	6CJ–43801–10	.ROD .TIGE		1				
4	62Y–43822–00	.SEAL, TRIM DUST .JOINT		1				
5	6CJ–43821–10	.SCREW, TRIM CYLINDER END .VIS		1				
6	93210–49001	.O-RING .JOINT TORIQUE		1				
7	6CJ–43863–00	.O-RING .JOINT TORIQUE		1				
8	6CJ–4380R–10	.CYLINDER END SUB ASSY .CYLINDRE RACCORD (ENS.)		1				
9	6CJ–43863–00	..O-RING ..JOINT TORIQUE		1				
10	93210–44006	..O-RING ..JOINT TORIQUE		1				
11	6C5–43861–00	.O-RING .JOINT TORIQUE		1				
12	6C5–43871–00	.RING, BACK UP .SEGMENT		1				
13	6CJ–22471–10	CYLINDER, SHOCK ABSORBER CYLINDRE, AMORTISSEUR		1				
14	93503–16003	BALL BILLES		6				
15	6C5–43861–00	O-RING JOINT TORIQUE		1				
16	6C5–43875–00	RING, SNAP RESSORT		1				
17	6CJ–4381B–10	FREE PISTON SUB ASSY PISTON AUXILIAIRE (ENS.)		1				
18	6C5–43899–00	PLATE STOPPER PLAQUETTE		1				
19	62X–4384H–00	SPRING RESSORT		2				
20	6C5–22435–00	PLATE, VALVE 2 PLAQUE, CLAPET 2		1				
21	99009–32500	CIRCLIP CIRCLIP		1				
22	6C5–4380K–12	CYLINDER, TILT SUB ASSY CYLINDRE		1				
23	6C5–43817–10	FILTER 2 FILTRE 2		2				
24	69J–4389J–00	O-RING JOINT TORIQUE		2				
25	6C5–43816–00	FILTER 1 FILTRE 1		1				
26	6C5–4380G–00	PLATE PLAQUE		1				
27	91318–05045	BOLT BOULON		4				

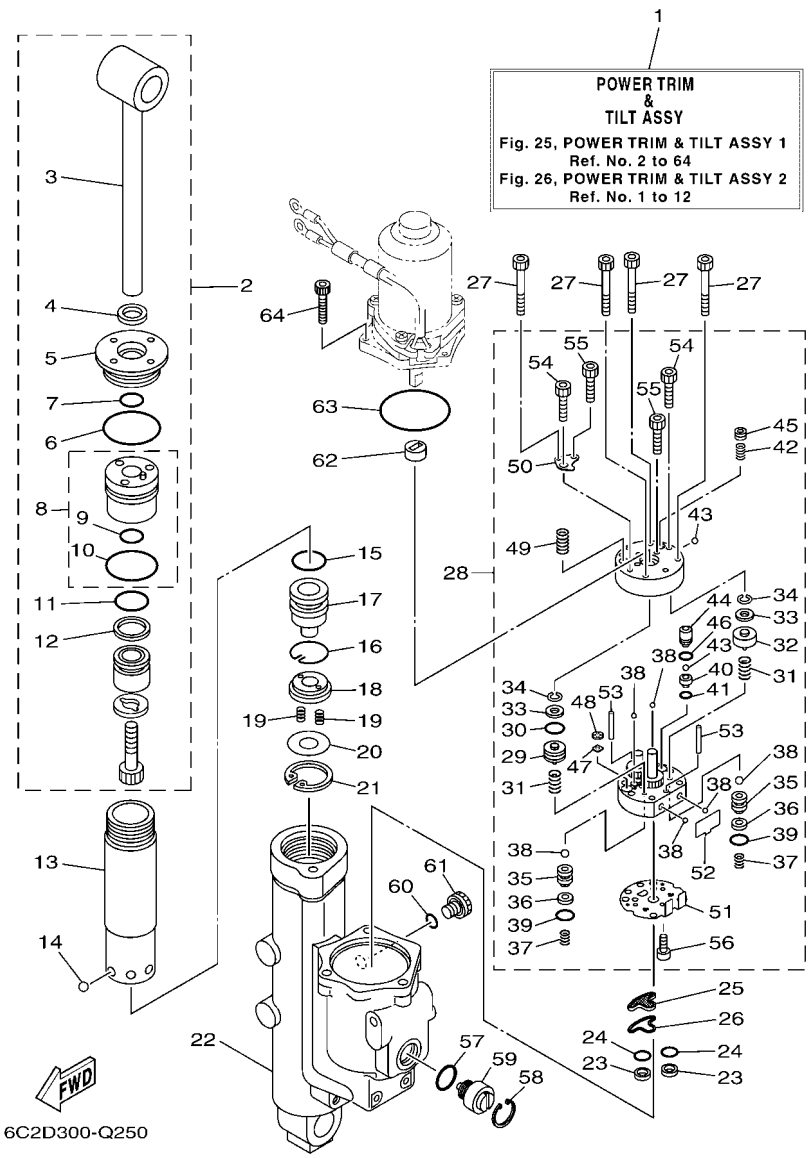

FIG. 25 POWER TRIM & TILT ASSY 1 — PUISSANCE PARER ET INCLINER 1

REF. NO.	PART NO. N° PIECES	DESCRIPTION DESCRIPTION	ED	ET				REMARKS REMARQUES
28	6C5–43830–10	GEAR PUMP ASSY POMPE A PIGNON (ENS.)		1				
29	6D8–43841–00	.PISTON, SHUTTLE .PISTON		1				
30	6H1–43883–00	.O-RING .JOINT TORIQUE		1				
31	69J–43894–00	.SPRING, SHUTTLE RETURN .RESSORT		2				
32	6D8–4384M–00	.PISTON, SHUTTLE 2 .PISTON 2		1				
33	69A–4384F–00	.SEAL, MAIN VALVE .JOINT		2				
34	99002–03600	.CIRCLIP .CIRCLIP		2				
35	6EK–4382E–00	.ADAPTOR 2 .ADAPTEUR 2		2				
36	6C6–4387G–00	.WASHER .RONDELLE		2				
37	6C6–43853–00	.SPRING, MAIN VALVE .RESSORT		2				
38	93505–32038	.BALL .BILLE		6				
39	69J–4389J–00	.O-RING .JOINT TORIQUE		2				
40	6D8–43851–00	.SEAT, RELIEF VALVE .SIEGE		1				
41	93210–064A5	.O-RING .JOINT TORIQUE		1				
42	6C5–43855–10	.SPRING, UP RELIEF .RESSORT		1				
43	93501–08001	.BALL .BILLE		2				
44	6D8–43844–00	.PIN, VALVE SUPPORT .GOUPILLE		1				
45	6D8–43843–00	.SCREW, VALVE LOCK .VIS		1				
46	93210–04N51	.O-RING .JOINT TORIQUE		1				
47	6H1–4384G–11	.SEAL, RELIEF VALVE .JOINT		1				
48	6H1–43844–10	.PIN, VALVE SUPPORT .GOUPILLE		1				
49	6C5–43856–10	.SPRING, DOWN RELIEF .RESSORT		1				
50	6D8–4382L–00	.CAP, RELIEF VALVE .CAPUCHON		1				
51	6C5–43895–00	.SEAT, RELIEF VALVE .SIEGE		1				
52	6C5–43854–00	.SPRING, MANUAL RELEASE .RESSORT		1				
53	93604–26256	.PIN, DOWEL .CLAVETTE		2				
54	91318–05030	.BOLT .BOULON		2				

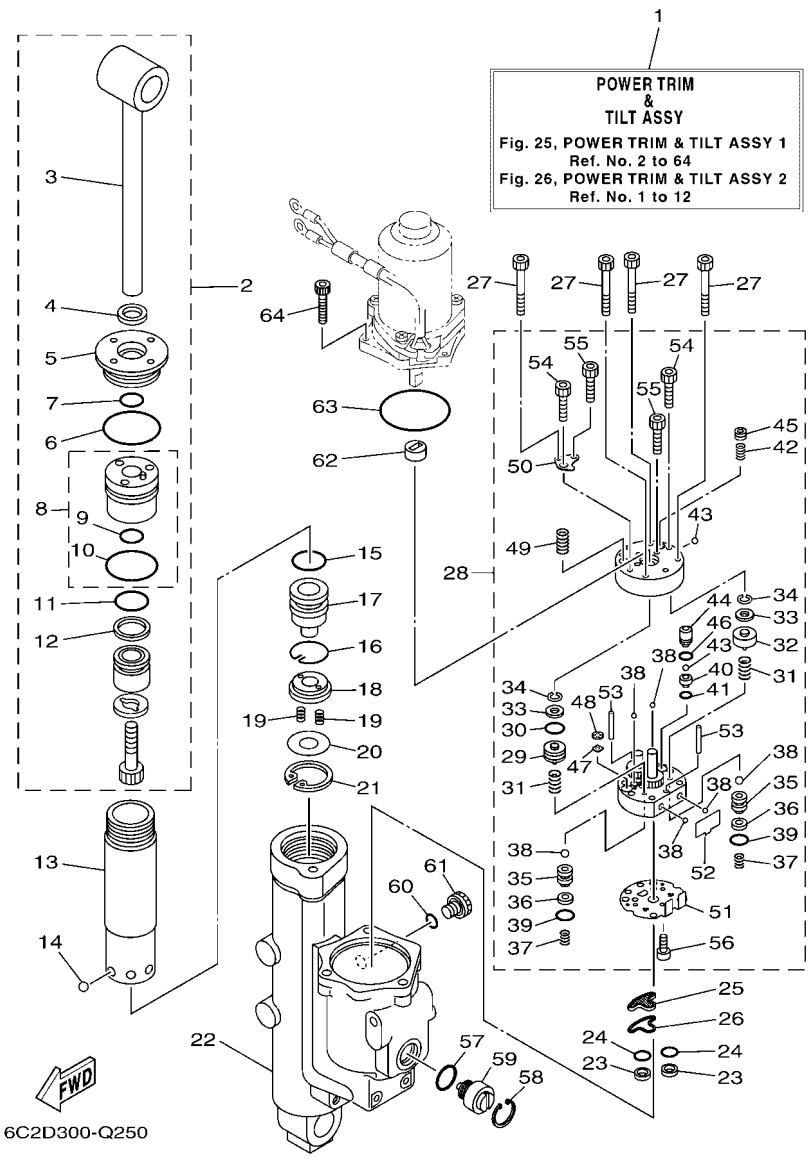

FIG. 25 POWER TRIM & TILT ASSY 1 — PUISSANCE PARER ET INCLINER 1

REF. NO.	PART NO. N° PIECES	DESCRIPTION DESCRIPTION	ED	ET				REMARKS REMARQUES
55	91318–03025	.BOLT .BOULON		2				
56	91318–03005	.BOLT .BOULON		1				
57	6D8–43863–00	O-RING JOINT TORIQUE		1				
58	6H1–43875–00	RING, SNAP RESSORT		1				
59	6CJ–43845–10	SCREW, MANUAL RELEASE VIS		1				
60	6CJ–43861–10	O-RING JOINT TORIQUE		1				
61	6CJ–43829–10	PLUG, RESERVOIR BOUCHON		1				
62	6C5–43831–00	CONNECTOR, SHAFT RACCORD		1				
63	93210–64488	O-RING JOINT TORIQUE		1				
64	91380–05020	BOLT BOULON		3				

FIG. 26 POWER TRIM & TILT ASSY 2 — PUISSANCE PARER ET INCLINER 2

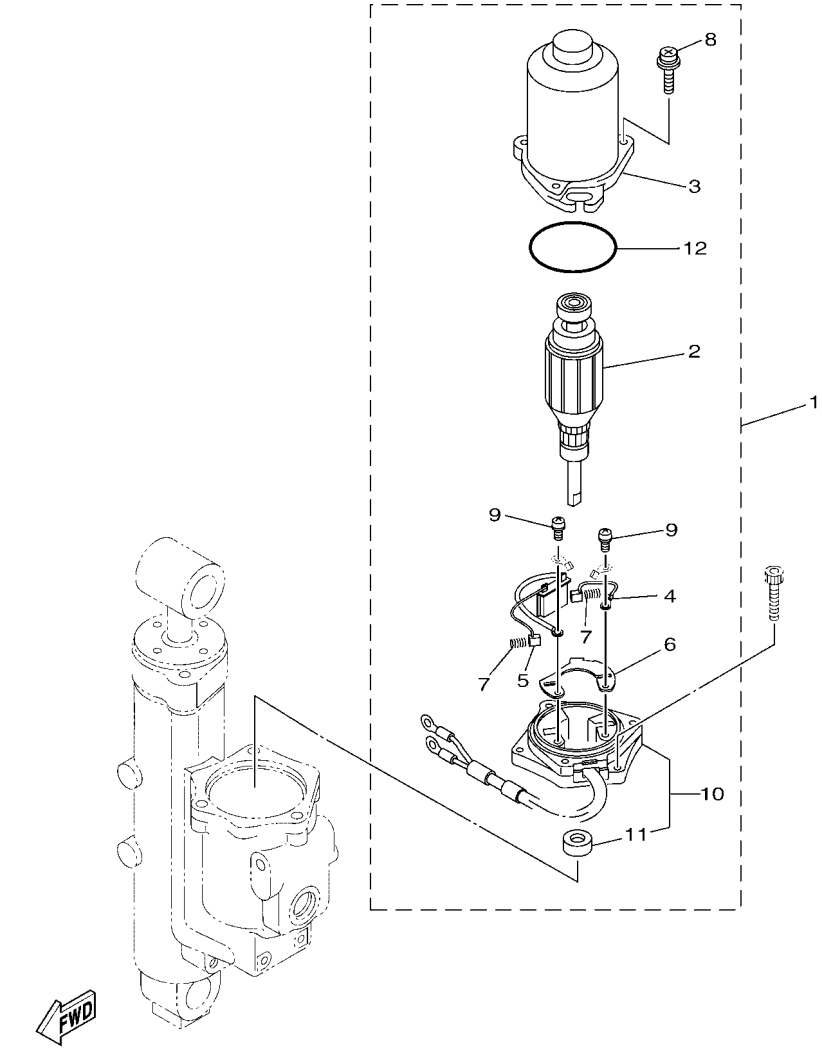

REF. NO.	PART NO. N° PIECES	DESCRIPTION DESCRIPTION	ED	ET				REMARKS REMARQUES
1	6CJ–43880–13	MOTOR ASSY MOTEUR (ENS.)		1				
2	6CJ–43805–11	.ARMATURE ASSY .INDUIT (ENS.)		1				
3	6CJ–43804–11	.STATOR ASSY .STATOR (ENS.)		1				
4	6EK–43892–00	.BRUSH 2 .BALAI 2		1				
5	6CJ–82181–10	.CIRCUIT BREAKER COMP. .RUPTEUR COMPLET		1				
6	6EK–4380F–00	.PLATE, BRUSH HOLDER .PLAQUE		1				
7	62X–4386K–00	.SPRING, BRUSH .RESSORT, BALAI		2				
8	6CJ–43879–10	.SCREW, WITH WASHER .VIS, AVEC RONDELLE		3				
9	97602–04316	.SCREW, PAN HEAD WITH WASHER .VIS, AVEC RONDELLE		2				
10	6CJ–43881–10	.FRAME, END .BATI		1				
11	6EK–43882–00	..OIL SEAL ..JOINT SPI		1				
12	6CJ–43862–11	.O-RING .JOINT TORIQUE		1				

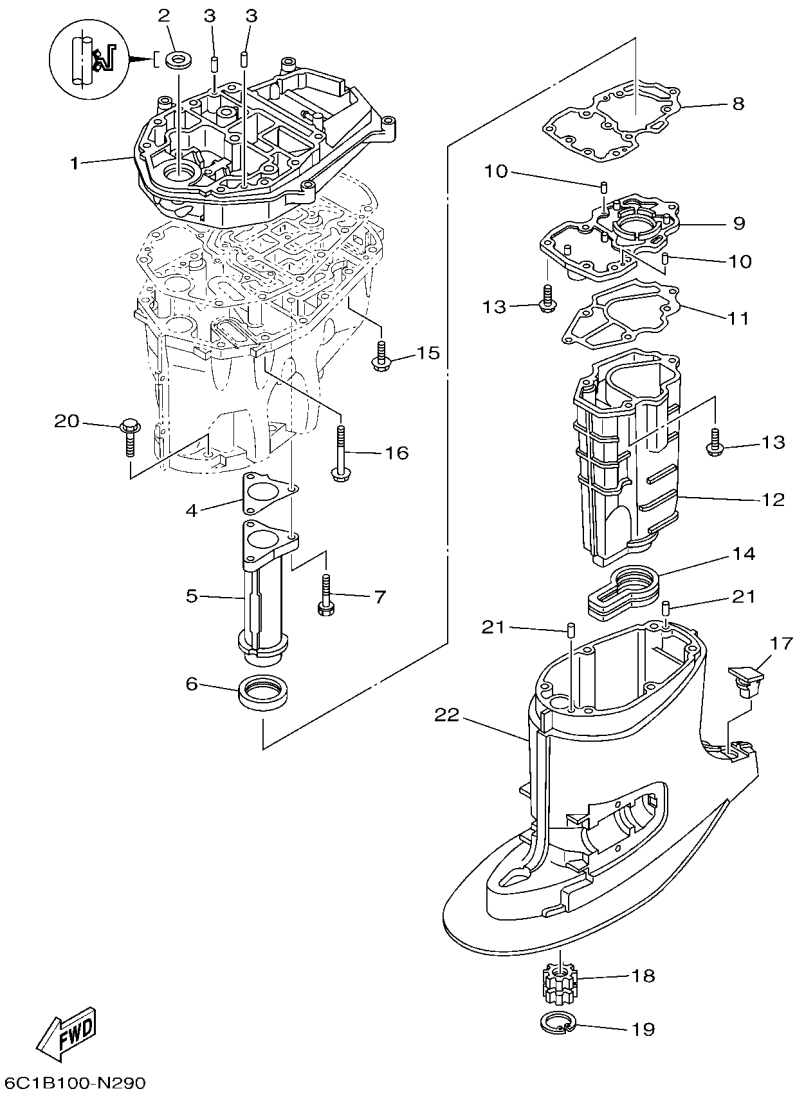

FIG. 27 UPPER CASING — FOURREAU

REF. NO.	PART NO. N° PIECES	DESCRIPTION DESCRIPTION	ED	ET				REMARKS REMARQUES
1	6C5–41137–03	GUIDE, EXHAUST COLLECTEUR D'ECHAPPEMENT	1	1				
2	93103–18011	OIL SEAL JOINT SPY	1	1				
3	93608–12M05	PIN, DOWEL AXE	2	2				
4	6C5–41133–00	GASKET, EXHAUST MANIFOLD 1 JOINT, PIPE D'ECHAPPEMENT	1	1				
5	6C5–41131–00–CA	MANIFOLD, EXT. 1 PIPE D'ECHAPPEMENT	1	1				
6	6C5–46132–00	GASKET 1 JOINT 1	1	1				
7	90119–06261	BOLT, WITH WASHER BOULON, AVEC RONDELLE	3	3				
8	6C5–41134–00	GASKET, EXHAUST MANIFOLD JOINT, PIPE D'ECHAPPEMENT	1	1				
9	6C5–45181–00–CA	PLATE PLAQUETTE	1	1				
10	93604–10M03	PIN, DOWEL CLAVETTE	2	2				
11	6C5–41135–00	GASKET, EXHAUST MANIFOLD JOINT, PIPE D'ECHAPPEMENT	1	1				
12	6C5–14711–00–CA	MUFFLER 1 POT D'ECHAPPEMENT 1	1	1				
13	97E75–06525	BOLT, HEXAGON W/W DEEP RECESS VIS HEXAGONAL AVC RONDELLE	6	6				
14	6C5–45123–00	GASKET, MUFFLER JOINT, POT DE DETENTE	1	1				
15	90119–08182	BOLT, WITH WASHER BOULON, AVEC RONDELLE	4	4				
16	90119–08202	BOLT, WITH WASHER BOULON, AVEC RONDELLE	8	8				
17	6C5–45155–01	CAP CAPUCHON	1	1				
18	69W–45318–00	BUSHING, DRIVE SHAFT DOUILLE, ARBRE MOTEUR	1	1				
19	93420–36M01	CIRCLIP CIRCLIP, TYPE S	1	1				
20	97E75–10545	BOLT, HEXAGON W/W DEEP RECESS VIS HEXAGONAL AVC RONDELLE	6	6				
21	93606–12019	PIN, DOWEL GOUPILLE	2	2				
22	6C5–45111–00–8D	CASING, UPPER FOURREAU	1	1				

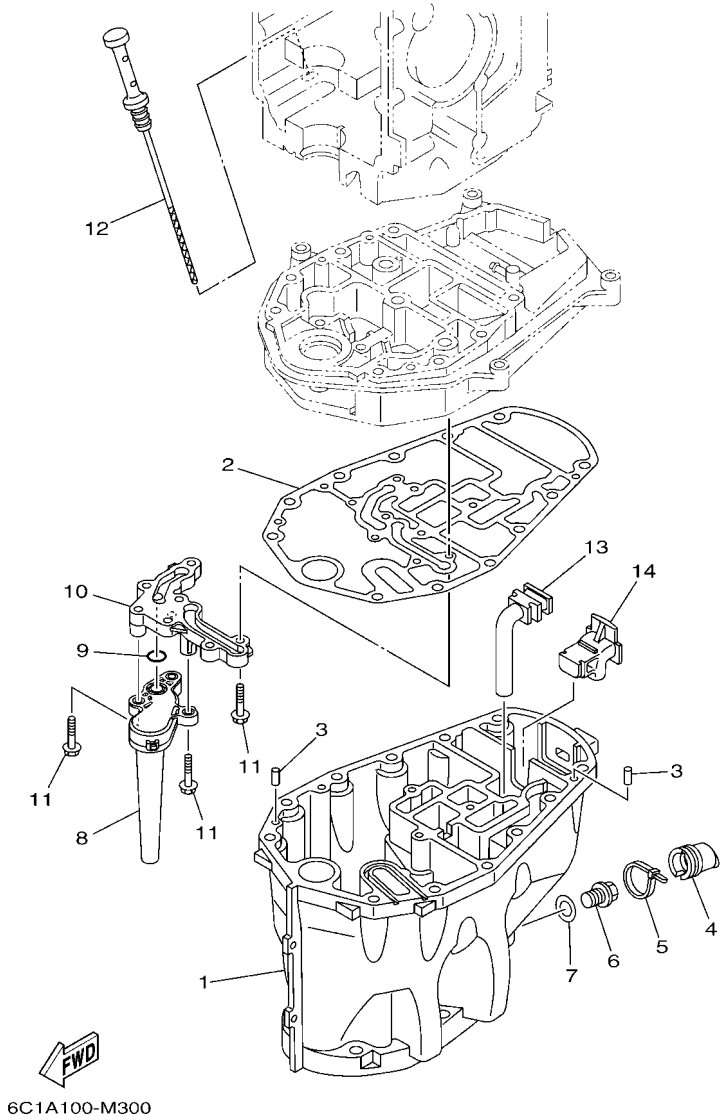

FIG. 28 OIL PAN — VENTILATEUR D'HUILE

REF. NO.	PART NO. N° PIECES	DESCRIPTION DESCRIPTION	ED	ET				REMARKS REMARQUES
1	6C5–15311–02	OIL PAN VENTILATEUR D'HUILE	1	1				
2	6C5–15312–01	GASKET, OIL PAN JOINT DE VENTILATEUR D'HUILE	1	1				
3	93606–12019	PIN, DOWEL GOUPILLE	2	2				
4	6CJ–15316–01	DAMPER 1 AMORTISSEUR 1	1	1				
5	90465–11M59	CLAMP BRIDE	1	1				
6	90340–14M06	PLUG, STRAIGHT SCREW PLOT, FILETE DROIT	1	1				
7	90430–14M09	GASKET JOINT	1	1				
8	6CJ–13411–10	STRAINER, OIL FILTRE, HUILE	1	1				
9	93210–12790	O-RING JOINT TORIQUE	1	1				
10	6CJ–15333–10	COVER COUVERCLE	1	1				
11	95812–06025	BOLT, FLANGE BOULON	9	9				
12	6C5–15362–00	PLUG, OIL LEVEL PLOT, NIVEAU D'HUILE	1	1				
13	6C5–45135–10	PIPE TUYAU	1	1				
14	6C5–45136–10	PIPE DURITE	1	1				

FIG. 29 LOWER CASING & DRIVE 1 — BOITIER D'HELICE TRANSMISSION1

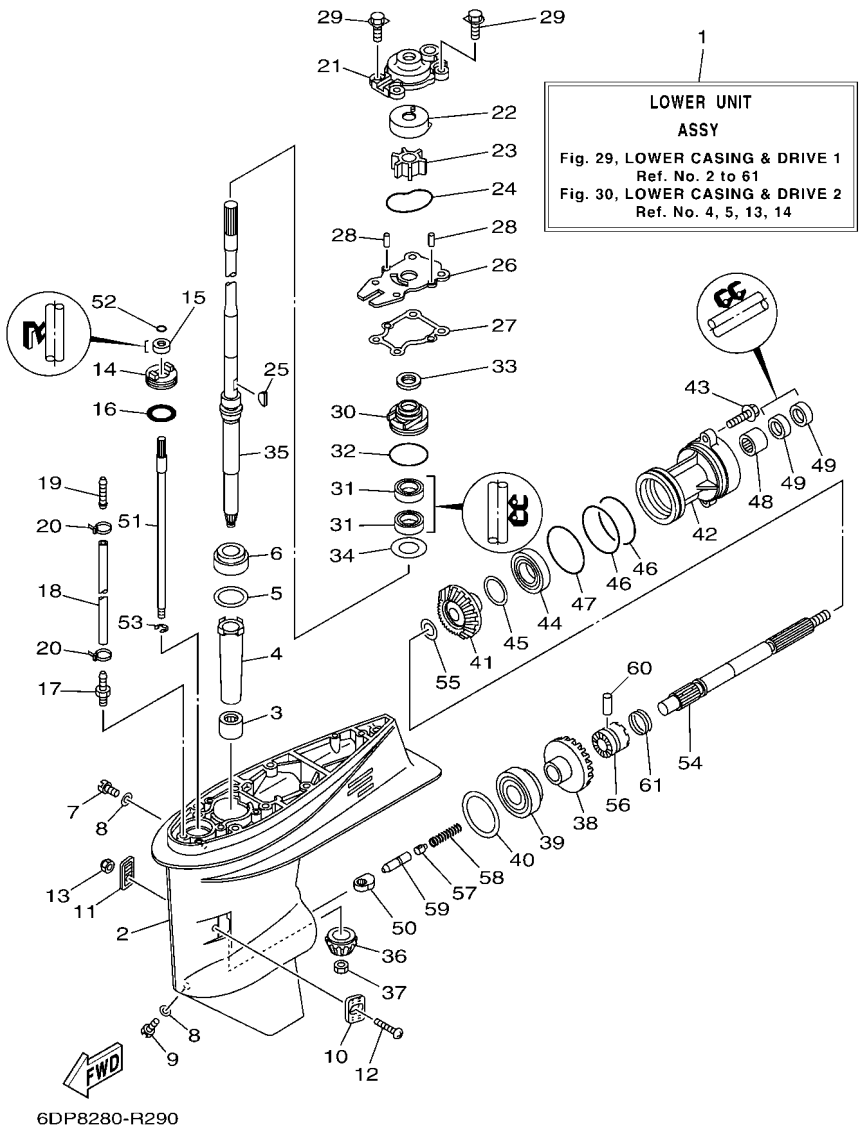

REF. NO.	PART NO. N° PIECES	DESCRIPTION DESCRIPTION	ED	ET				REMARKS REMARQUES
1	69W–45300–03–8D	LOWER UNIT ASSY UNITE INFERIEURE (ENS.)	1	1				L(20.7") L(20.7")
2	69W–45301–00–8D	CASING, LOWER BEQUILLE	1	1				
3	93315–32224	BEARING ROULEMENT	1	1				
4	6H4–45536–00	SLEEVE, DRIVE SHAFT MANCHON, ARBRE MOTEUR	1	1				
5	663–45587–01	SHIM (T:0.10MM) CALE (T:0.10MM)	1	1				UR UR
	663–45587–10	SHIM (T:0.12MM) CALE (T:0.12MM)	1	1				UR UR
	663–45587–20	SHIM (T:0.15MM) CALE (T:0.15MM)	1	1				UR UR
	663–45587–30	SHIM (T:0.18MM) CALE (T:0.18MM)	1	1				UR UR
	663–45587–40	SHIM (T:0.30MM) CALE (T:0.30MM)	1	1				UR UR
	663–45587–50	SHIM (T:0.40MM) CALE (T:0.40MM)	1	1				UR UR
	663–45587–60	SHIM (T:0.50MM) CALE (T:0.50MM)	1	1				UR UR
6	93332–00001	BEARING ROULEMENT	1	1				
7	90340–08002	PLUG, STRAIGHT SCREW PLOT, FILETE DROIT	1	1				
8	90430–08003	GASKET JOINT	2	2				
9	688–45341–10	PLUG, DRAIN BOUCHON DE VIDANGE	1	1				
10	63D–45214–00	COVER, WATER INLET 1 GRILLE, ENTREE D'EAU 1	1	1				
11	63D–45215–00	COVER, WATER INLET 2 GRILLE, ENTREE D'EAU 2	1	1				
12	90152–05010	SCREW, COUNTERSUNK VIS, TETE NOYEE	1	1				
13	95380–05600	NUT ECROU	1	1				
14	63D–45321–00	PLATE PLAQUETTE	1	1				
15	93106–09014	OIL SEAL JOINT SPY	1	1				
16	93210–33MG4	O-RING JOINT TORIQUE	1	1				
17	6E5–45378–00	NIPPLE, HOSE RACCORD, TUYAU	1	1				
18	90445–07ME8	HOSE (L80) DURITE (L80)	1	1				L(20.7") L(20.7")
19	6E5–83558–10	END, NIPPLE RACCORD DE NIPPLE	1	1				
20	90465–11M10	CLAMP BRIDE	2	2				
21	63D–44311–00	HOUSING, WATER PUMP CORPS, POMPE A EAU	1	1				

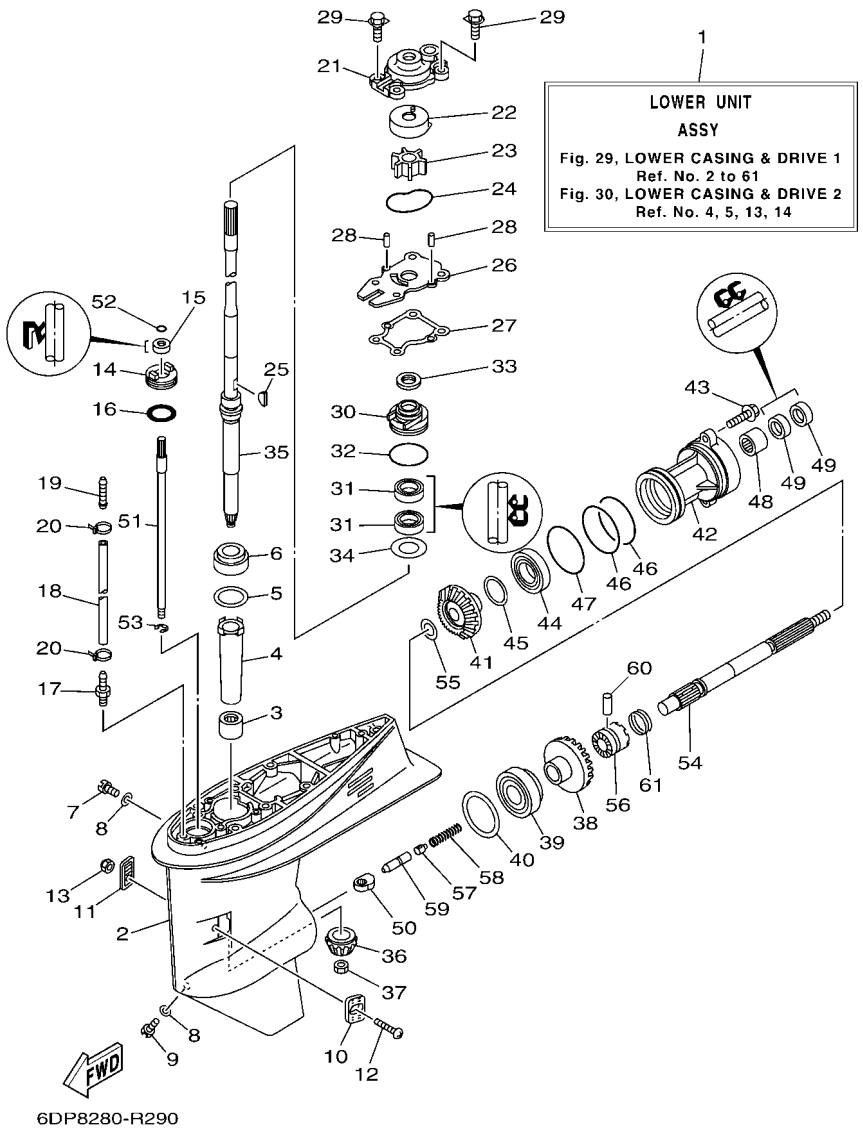

FIG. 29 LOWER CASING & DRIVE 1 — BOITIER D'HELICE TRANSMISSION1

REF. NO.	PART NO. N° PIECES	DESCRIPTION DESCRIPTION	ED	ET				REMARKS REMARQUES
22	63D–44322–00	INSERT, CARTRIDGE CUVETTE	1	1				
23	6H3–44352–00	IMPELLER TURBINE	1	1				
24	93210–59MG7	O-RING JOINT TORIQUE	1	1				
25	90280–03024	KEY, WOODRUFF CLAVETTE, DEMI-LUNE	1	1				
26	63D–44323–00	OUTER PLATE, CARTRIDGE PLAQUE EXTERIEURE	1	1				
27	63D–44316–00	GASKET, WATER PUMP JOINT, POMPE A EAU	1	1				
28	93604–08062	PIN, DOWEL CLAVETTE	2	2				
29	90119–08185	BOLT, WITH WASHER BOULON, AVEC RONDELLE	4	4				
30	6BG–44341–00	HOUSING, WATER PUMP CORPS, POMPE A EAU	1	1				
31	93101–25M57	OIL SEAL JOINT SPY	2	2				
32	93210–48001	O-RING JOINT TORIQUE	1	1				
33	63D–45344–01	COVER, OIL SEAL FLASQE, JOINT D'HUILE	1	1				
34	90201–27M00	WASHER, PLATE RONDELLE, PLATE	1	1				
35	69W–45501–00	DRIVE SHAFT COMP. ARBRE MOTEUR COMP.	1	1				L(20.7") L(20.7")
36	69W–45551–00	PINION (13T) PIGNON D'ATTAQUE (13D)	1	1				
37	90170–12138	NUT ECROU	1	1				
38	69W–45560–00	GEAR 1 (24T) PIGNON 1 (24T)	1	1				
39	93332–00092	BEARING ROULEMENT	1	1				
40	663–45567–01	SHIM (T:0.10MM) CALE (T:0.10MM)	1	1				UR UR
	663–45567–10	SHIM (T:0.12MM) CALE (T:0.12MM)	1	1				UR UR
	663–45567–20	SHIM (T:0.15MM) CALE (T:0.15MM)	1	1				UR UR
	663–45567–30	SHIM (T:0.18MM) CALE (T:0.18MM)	1	1				UR UR
	663–45567–40	SHIM (T:0.30MM) CALE (T:0.30MM)	1	1				UR UR
	663–45567–50	SHIM (T:0.40MM) CALE (T:0.40MM)	1	1				UR UR
	663–45567–60	SHIM (T:0.50MM) CALE (T:0.50MM)	1	1				UR UR
41	62Y–45571–00	GEAR 2 (24T) PIGNON 2 (24T)	1	1				
42	63D–45361–02–8D	CAP, LOWER CASING COUVERCLE, BOITIER D'HELICE	1	1				

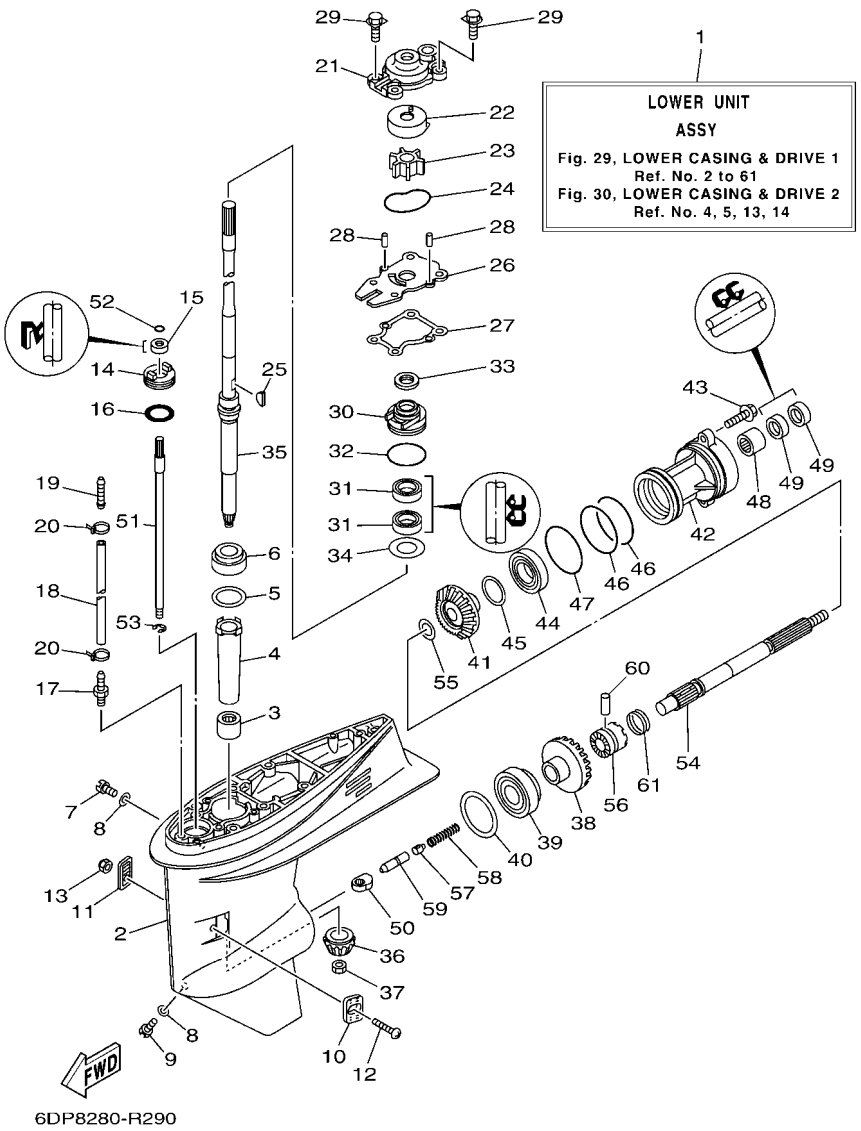

FIG. 29 LOWER CASING & DRIVE 1 — BOITIER D'HELICE TRANSMISSION1

REF. NO.	PART NO. N° PIECES	DESCRIPTION DESCRIPTION	ED	ET				REMARKS REMARQUES
43	90105–08M61	BOLT, FLANGE BOULON, A COLLERETTE	2	2				
44	93306–001U1	BEARING ROULEMENT	1	1				
45	63D–45577–00	SHIM (T:0.10MM) CALE (T:0.10MM)	1	1				UR UR
	63D–45577–10	SHIM (T:0.12MM) CALE (T:0.12MM)	1	1				UR UR
	63D–45577–20	SHIM (T:0.15MM) CALE (T:0.15MM)	1	1				UR UR
	63D–45577–30	SHIM (T:0.18MM) CALE (T:0.18MM)	1	1				UR UR
	63D–45577–40	SHIM (T:0.30MM) CALE (T:0.30MM)	1	1				UR UR
	63D–45577–50	SHIM (T:0.40MM) CALE (T:0.40MM)	1	1				UR UR
	63D–45577–60	SHIM (T:0.50MM) CALE (T:0.50MM)	1	1				UR UR
46	93210–74MG5	O-RING JOINT TORIQUE	2	2				
47	93210–69MG6	O-RING JOINT TORIQUE	1	1				
48	93317–22204	BEARING ROULEMENT	1	1				
49	93101–22M00	OIL SEAL JOINT SPY	2	2				
50	62Y–44151–00	CAM, SHIFT CAME, INVERSION	1	1				
51	63D–44144–00	ROD, SHIFT 2 TIGE D'EMBRAYAGE 2	1	1				
52	93210–07003	O-RING JOINT TORIQUE	1	1				
53	99001–08600	CIRCLIP CIRCLIP	1	1				
54	63D–45611–00	SHAFT, PROPELLER ARBRE, HELICE	1	1				
55	90201–22008	WASHER, PLATE RONDELLE, PLATE	1	1				
56	62Y–45631–00	CLUTCH, DOG CRABOT	1	1				
57	663–45634–00	SLIDE, SHIFT CONTRE-POUSSOIR	1	1				
58	90501–18001	SPRING, COMPRESSION RESSORT, COMPRESSION	1	1				
59	63D–45635–00	PLUNGER, SHIFT POUSSOIR D'EMBRAYAGE	1	1				
60	90250–06023	PIN, STRAIGHT GOUPILLE, DROITE	1	1				
61	67C–45633–01	RING, CROSS PIN JONC, GOUPILLE CRABOT	1	1				

FIG. 30 LOWER CASING & DRIVE 2 — BOITIER D'HELICE TRANSMISSION2

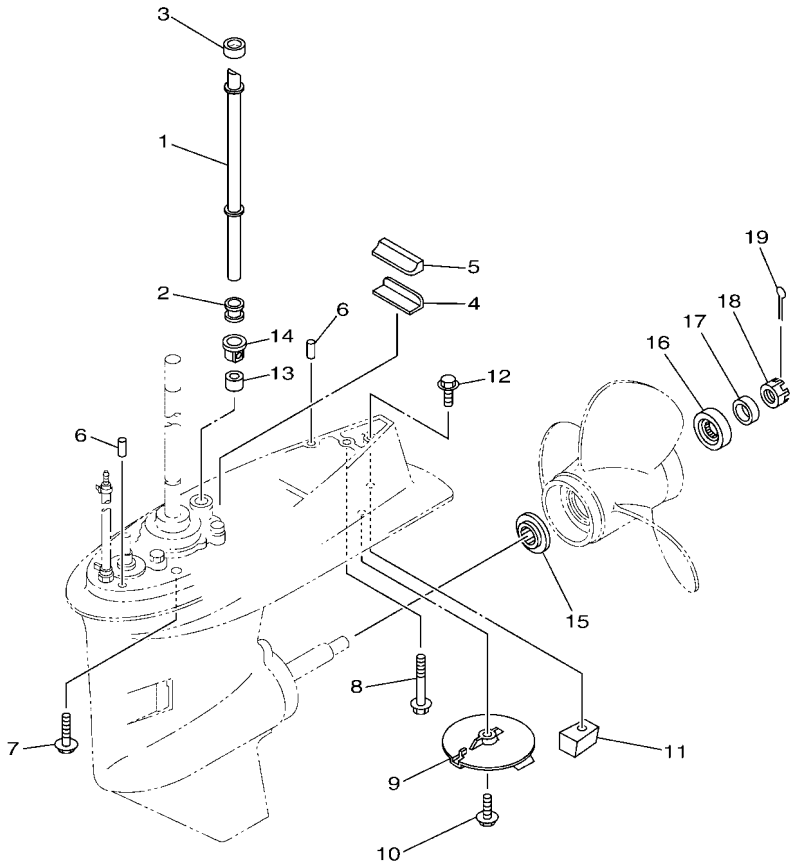

6C1F100-S320

REF. NO.	PART NO. N° PIECES	DESCRIPTION DESCRIPTION	ED	ET				REMARKS REMARQUES
1	6C5–44361–00	TUBE, WATER 1 TUBE D'EAU 1	1	1				L(20.7") L(20.7")
2	663–44367–01	DAMPER, WATER SEAL 3 JOINT TUBE D'EAU 3	1	1				
3	663–44366–01	DAMPER, WATER SEAL 2 JOINT, TUBE D'EAU 2	1	1				
4	663–45376–00	GUIDE, SEAL DAMPER BUTEE, JOINT CAOUTCHOUC	1	1				
5	63D–45375–00	DAMPER, SEAL BOURRELET, CAOUTCHOUC	1	1				
6	93606–12019	PIN, DOWEL GOUPILLE	2	2				
7	90119–10068	BOLT, WITH WASHER BOULON, AVEC RONDELLE	4	4				L(20.7") L(20.7")
8	90119–08195	BOLT, WITH WASHER BOULON, AVEC RONDELLE	1	1				L(20.7") L(20.7")
9	67C–45371–00	TAB-TRIM ANODE DERIVE	1	1				
10	97E95–08525	BOLT, HEXAGON W/W DEEP RECESS VIS HEXAGONAL AVC RONDELLE	1	1				
11	67C–45251–00	ANODE ANODE	1	1				
12	97E95–08535	BOLT, HEXAGON W/W DEEP RECESS VIS HEXAGONAL AVC RONDELLE	1	1				
13	663–44366–01	DAMPER, WATER SEAL 2 JOINT, TUBE D'EAU 2	1	1				
14	63D–44312–00	COVER, WATER PUMP HOUSING COUVERCLE	1	1				
15	663–45987–02	SPACER 1 ENTRETOISE 1	1	1				
16	66T–45997–00	SPACER 2 ENTRETOISE 2	1	1				
17	90389–22M01	BUSH DOUILLE	1	1				
18	90171–16011	NUT, CASTLE ECROU, CRENELE	1	1				
19	91490–30025	PIN. COTTER GOUPILLE	1	1				

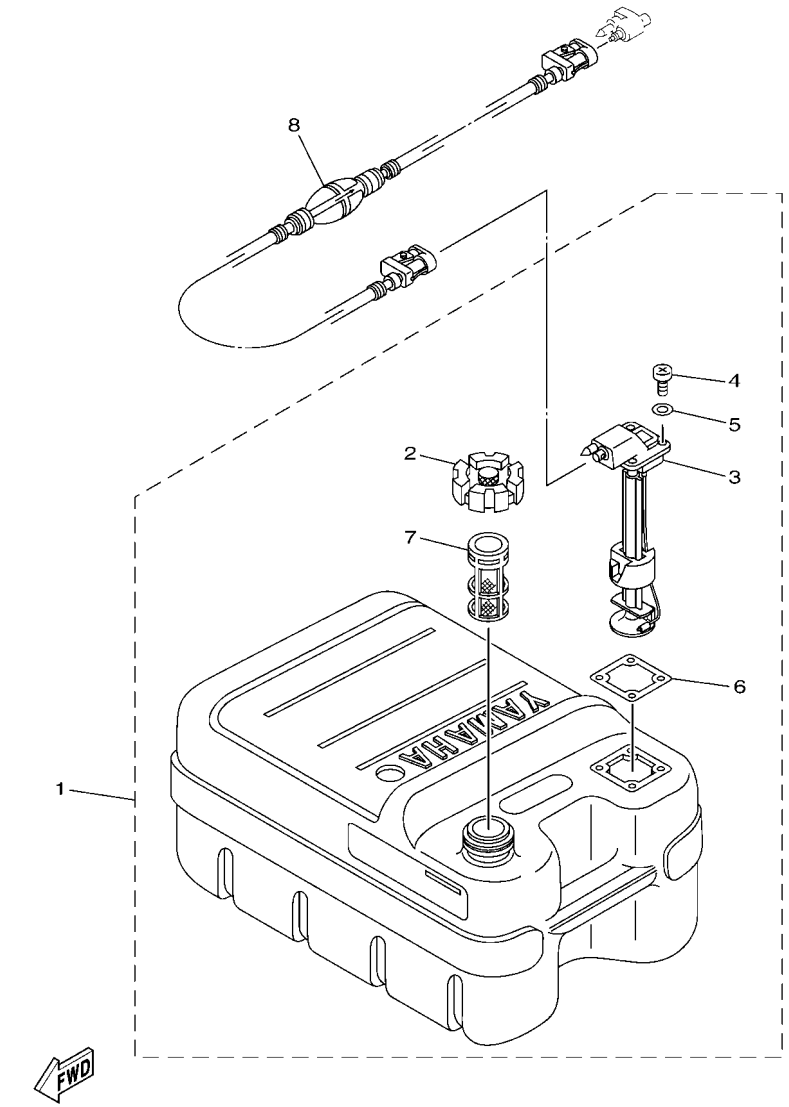

6CAD300-U280

FIG. 31 FUEL TANK — RESERVOIR A CARBURANT

REF. NO.	PART NO. N° PIECES	DESCRIPTION DESCRIPTION	ED	ET				REMARKS REMARQUES
1	6YJ–24201–31	FUEL TANK ASSY (24L) RESERVOIR A ESSENCE (ENS.):24L	1	1				AP AP
2	6YJ–24610–01	.CAP ASSY .BOUCHON	1	1				
3	6Y1–24260–30	.FUEL METER ASSY .INDICATEUR DE CARBURANT	1	1				WITH INDICATOR WITH INDICATOR
4	90157–05M19	.SCREW, PAN HEAD .VIS, TETE TRONCONIQUE	4	4				
5	6Y1–24329–00	.SEAL .JOINT	4	4				
6	6Y1–24268–01	.GASKET, FUEL METER .JOINT, JAUGE A CARBURANT	1	1				
7	6YJ–24167–00	.STRAINER .FILTRE	1	1				
8	6YL–24306–54	FUEL PIPE COMP. 1 DURITE A ESSENCE 1	1	1				AP AP

FIG. 32 STEERING GUIDE — FIXATION DE DIRECTION

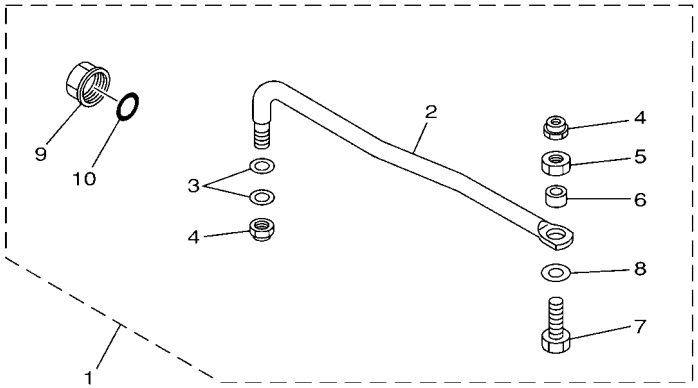

65W0010-8210

REF. NO.	PART NO. N° PIECES	DESCRIPTION DESCRIPTION	ED	ET				REMARKS REMARQUES
1	65W–61350–00	STEERING GUIDE ATTACHMENT KIT FIXATIONS DE DIRECTION	1	1				AP AP
2	65W–61351–00	.ROD, STEERING LINK .RENVOI DE DIRECTION	1	1				
3	90201–10M20	.WASHER, PLATE .RONDELLE, PLATE	2	2				
4	90185–09M01	.NUT, SELF-LOCKING .ECROU,AUTO-BLOQUANT	2	2				
5	90170–09M03	.NUT .ECROU	1	1				
6	90387–10M42	.COLLAR .COLLERETTE	1	1				
7	90101–09M01	.BOLT .BOULON	1	1				
8	90201–10081	.WASHER, PLATE .RONDELLE, PLATE	1	1				
9	6E5–43145–01	.CAP, CLAMP BRACKET .CAPUCHON, PRESSE	1	1				
10	93210–16275	.O-RING .JOINT TORIQUE	1	1				

FIG. 33 OPTIONAL PARTS 1 — PIECES OPTIONNELLES 1

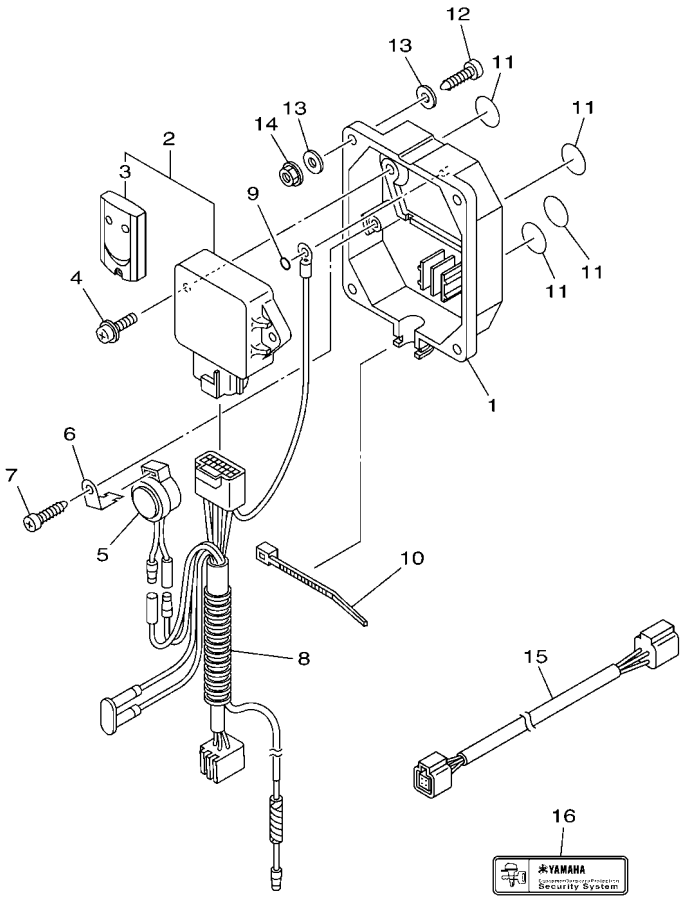

6CJ1100-K370

REF. NO.	PART NO. N° PIECES	DESCRIPTION DESCRIPTION	ED	ET				REMARKS REMARQUES
1	6Y8–86267–00	CASE COMPLETE 1 CARTER (ENS.) 1	1	1				
2	6Y8–86260–03	REMOTE CONTROL UNIT ASSY UNITE DE TELECOMMANDE (ENS.)	1	1				
3	6AA–86261–01	.XMTR. COMP. .XMTR. COMP.	2	2				
4	97980–06216	SCREW, WITH WASHER VIS, AVEC RONDELLE	2	2				
5	6X4–83383–00	BUZZER RONFLEUR	1	1				
6	6X4–83386–00	STAY, BUZZER SUPPOR, RONFLEUR	1	1				
7	97780–60620	SCREW, TAPPING VIS, TETE BOMBEE	1	1				
8	6Y8–82509–10	WIRE, SUB LEAD FIL, SECONDAIRE	1	1				
9	93210–04279	O-RING JOINT TORIQUE	1	1				
10	90465–11M10	CLAMP BRIDE	1	1				
11	6Y8–8454G–00	PATCH 1 TAMPON 1	4	4				
12	90167–06M00	SCREW, TAPPING VIS, TETE FRAISEE	4	4				UR UR
	97880–06035	SCREW, PAN HEAD VIS, TETE TRONCONIQUE	4	4				UR UR
13	90201–06M30	WASHER, PLATE RONDELLE, PLATE	8	8				
14	95780–06300	NUT, FLANGE ECROU	4	4				
15	6Y8–82521–11	2FT PIGTAIL BUS FAISCEAU (L: 2FT.)	1	1				
16	6Y8–48277–00	STICKER 1 ETIQUETTE 1	4	4				

FIG. 34 OPTIONAL PARTS 2 — PIECES OPTIONNELLES 2

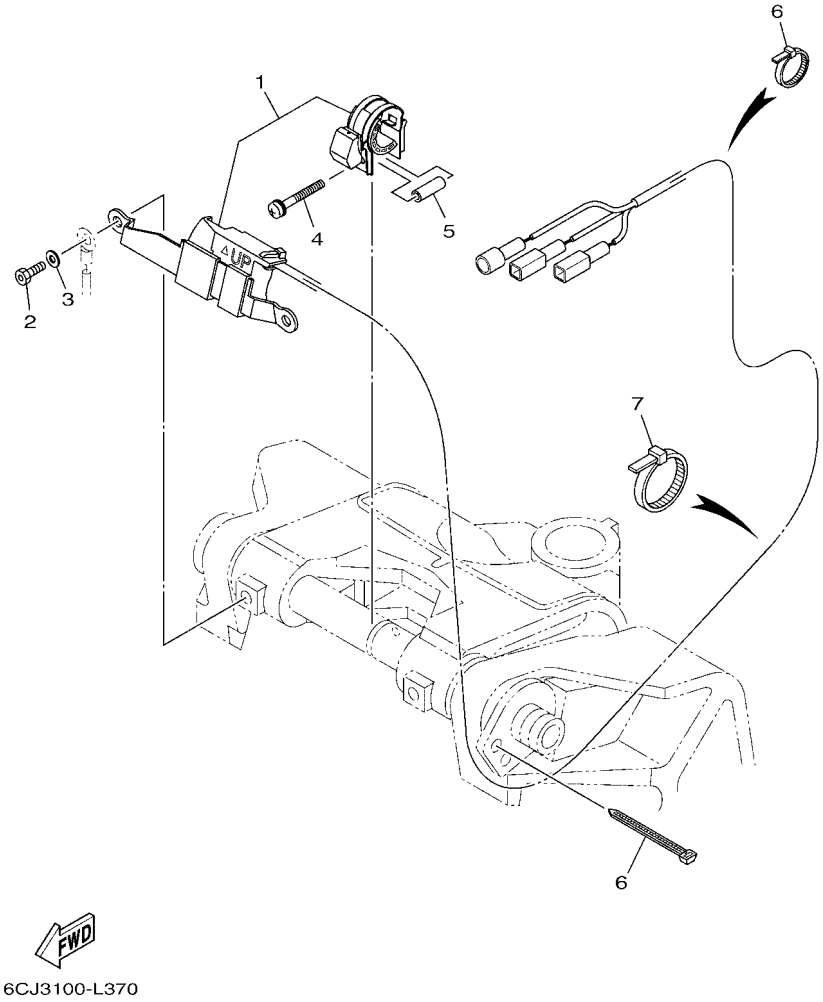

REF. NO.	PART NO. N° PIECES	DESCRIPTION DESCRIPTION	ED	ET				REMARKS REMARQUES
1	6C5–825E0–01	TILT LIMIT SWITCH ASSY COMMUTATEUR, LIMIT INCLINAISON		1				
2	90109–06M88	BOLT BOULON		2				
3	92990–06100	WASHER, SPRING RONDELLE, GROWER		2				
4	90159–05059	SCREW, WITH WASHER VIS, AVEC RONDELLE		1				
5	90387–05004	COLLAR COLLERETTE		1				
6	90465–11M10	CLAMP BRIDE		5				
7	90465–13M18	CLAMP BRIDE		3				

FIG. 35 REPAIR KIT 1 — KITS DE REPARATION 1

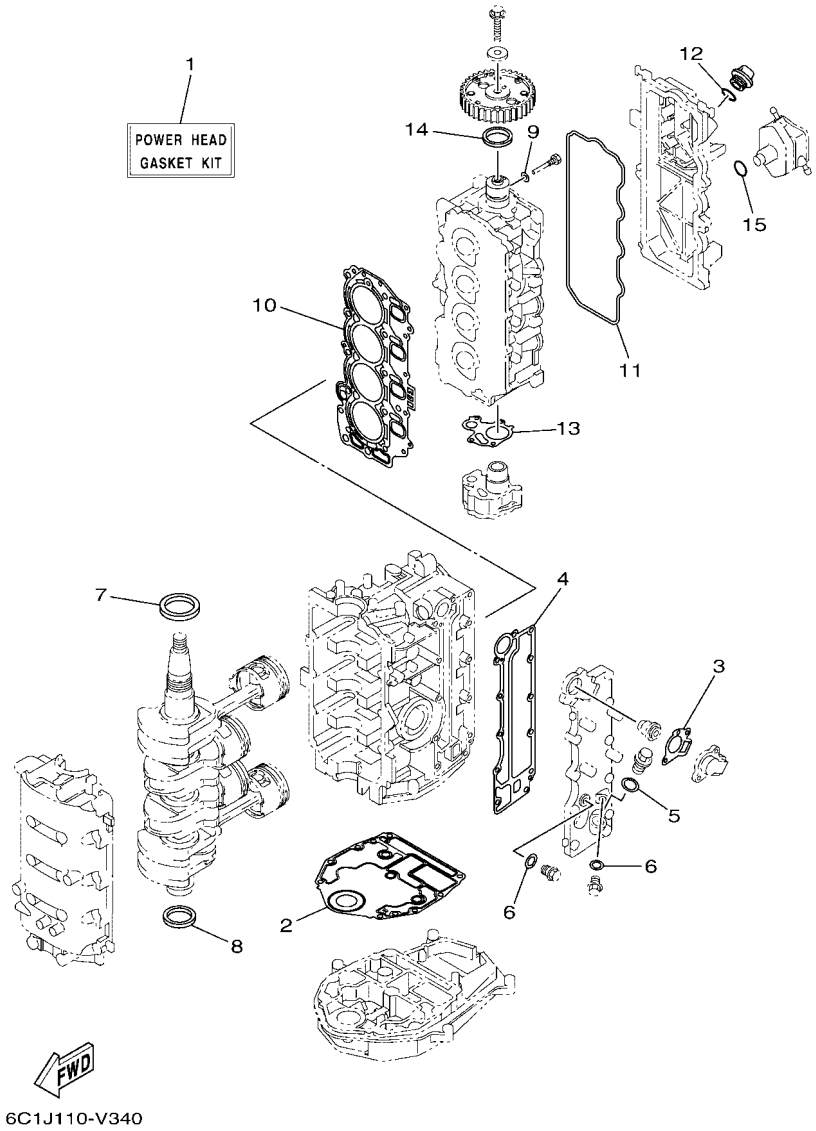

REF. NO.	PART NO. N° PIECES	DESCRIPTION DESCRIPTION	ED	ET				REMARKS REMARQUES
1	6C5–W0001–04	POWER HEAD GASKET KIT POCHETTE DE JINTS TETE MOTRICE	1	1				
2	6BG–11351–01	.GASKET, CYLINDER .JOINT, D'EMBASE	1	1				
3	62Y–12414–00	.GASKET, COVER .JOINT, COUVERCLE	1	1				
4	6C5–41114–10	.GASKET, EXHAUST OUTER COVER .JOINT, COUVERCLE D'ECHAPPEMENT	1	1				
5	90201–186F1	.WASHER, PLATE .RONDELLE, PLATE	1	1				
6	90430–14115	.GASKET .JOINT	2	2				
7	93102–43M42	.OIL SEAL .JOINT SPY	1	1				
8	93101–35002	.OIL SEAL .JOINT SPY	1	1				
9	90430–06014	.GASKET .JOINT	1	1				
10	6C5–11181–01	.GASKET, CYLINDER HEAD 1 .JOINT, DE CULASSE 1	1	1				
11	62Y–11356–00	.SEAL, CYLINDER 2 .JOINT, SPY CYLINDRE	1	1				
12	93210–24M79	.O-RING .JOINT TORIQUE	1	1				
13	6C5–13329–00	.GASKET, PUMP COVER .JOINT, COUVERCLE DE POMPE	1	1				
14	93102–37M40	.OIL SEAL .JOINT SPY	1	1				
15	93210–24M79	.O-RING .JOINT TORIQUE	1	1				

FIG. 36 REPAIR KIT 2 — KITS DE REPARATION 2

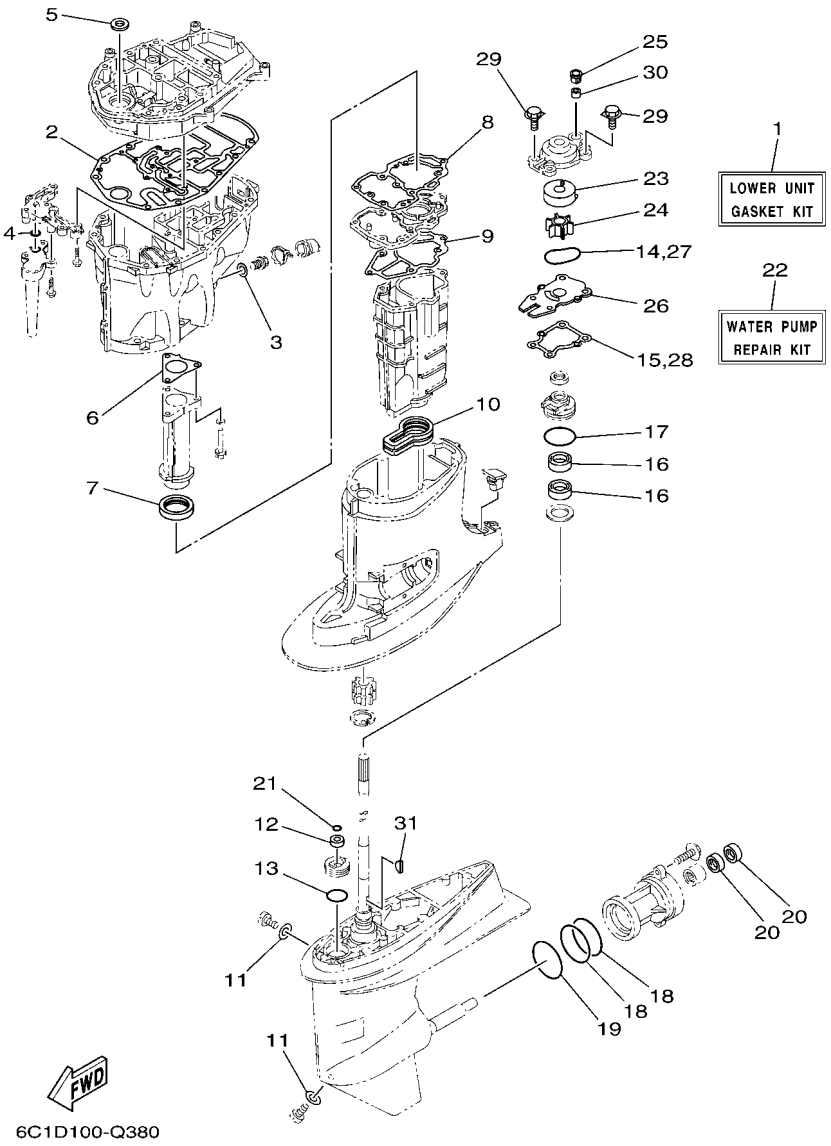

REF. NO.	PART NO. N° PIECES	DESCRIPTION DESCRIPTION	ED	ET				REMARKS REMARQUES
1	6C5–W0001–22	LOWER UNIT GASKET KIT POCHETTE DE JOINTS EMBASE	1	1				
2	6C5–15312–01	.GASKET, OIL PAN .JOINT DE VENTILATEUR D'HUILE	1	1				
3	90430–14M09	.GASKET .JOINT	1	1				
4	93210–12790	.O-RING .JOINT TORIQUE	1	1				
5	93103–18011	.OIL SEAL .JOINT SPY	1	1				
6	6C5–41133–00	.GASKET, EXHAUST MANIFOLD 1 .JOINT, PIPE D'ECHAPPEMENT	1	1				
7	6C5–46132–00	.GASKET 1 .JOINT 1	1	1				
8	6C5–41134–00	.GASKET, EXHAUST MANIFOLD .JOINT, PIPE D'ECHAPPEMENT	1	1				
9	6C5–41135–00	.GASKET, EXHAUST MANIFOLD .JOINT, PIPE D'ECHAPPEMENT	1	1				
10	6C5–45123–00	.GASKET, MUFFLER .JOINT, POT DE DETENTE	1	1				
11	90430–08003	.GASKET .JOINT	2	2				
12	93106–09014	.OIL SEAL .JOINT SPY	1	1				
13	93210–33MG4	.O-RING .JOINT TORIQUE	1	1				
14	93210–59MG7	.O-RING .JOINT TORIQUE	1	1				
15	63D–44316–00	.GASKET, WATER PUMP .JOINT, POMPE A EAU	1	1				
16	93101–25M57	.OIL SEAL .JOINT SPY	2	2				
17	93210–48001	.O-RING .JOINT TORIQUE	1	1				
18	93210–74MG5	.O-RING .JOINT TORIQUE	2	2				
19	93210–69MG6	.O-RING .JOINT TORIQUE	1	1				
20	93101–22M00	.OIL SEAL .JOINT SPY	2	2				
21	93210–07003	.O-RING .JOINT TORIQUE	1	1				
22	63D–W0078–03	WATER PUMP REPAIR KIT KIT DE REPARATION DE LA POMPE	1	1				
23	63D–44322–00	.INSERT, CARTRIDGE .CUVETTE	1	1				
24	6H3–44352–00	.IMPELLER .TURBINE	1	1				
25	63D–44312–00	.COVER, WATER PUMP HOUSING .COUVERCLE	1	1				
26	63D–44323–00	.OUTER PLATE, CARTRIDGE .PLAQUE EXTERIEURE	1	1				
27	93210–59MG7	.O-RING .JOINT TORIQUE	1	1				

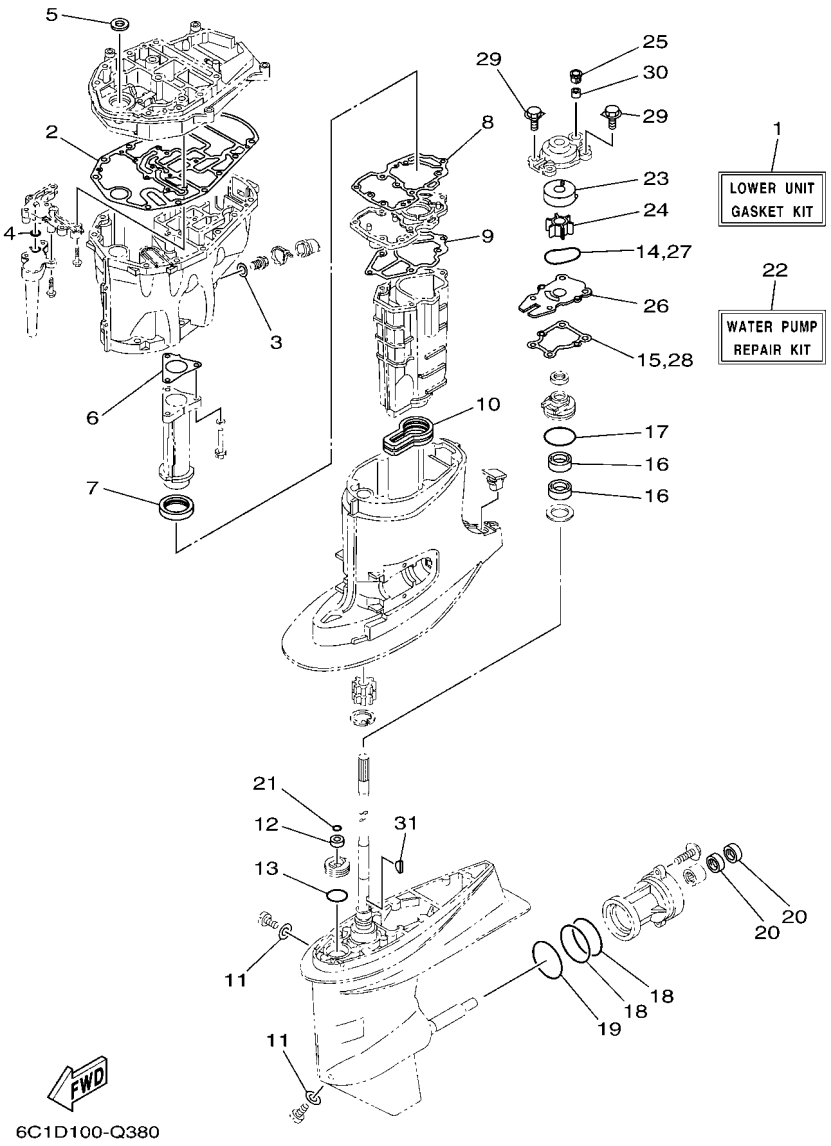

FIG. 36 REPAIR KIT 2 — KITS DE REPARATION 2

REF. NO.	PART NO. N° PIECES	DESCRIPTION DESCRIPTION	ED	ET				REMARKS REMARQUES
28	63D–44316–00	.GASKET, WATER PUMP .JOINT, POMPE A EAU	1	1				
29	90119–08185	.BOLT, WITH WASHER .BOULON, AVEC RONDELLE	4	4				
30	663–44366–01	.DAMPER, WATER SEAL 2 .JOINT, TUBE D'EAU 2	1	1				
31	90280–03024	.KEY, WOODRUFF .CLAVETTE, DEMI-LUNE	1	1				

NUMERICAL INDEX
INDEX NUMERIQUE

PART NO. N° PIECES	REF. NO.
6C5–11111–20–9S	5 – 2
62Y–11119–00	5 – 29
6CJ–11119–00	5 – 20
62Y–11133–31	5 – 3
6C5–11168–00	5 – 16
6C5–11181–01	5 – 10
	35 – 10
6C5–11191–02–9S	5 – 14
6G8–11197–A0	5 – 6
62Y–11325–00	1 – 3
	3 – 17
6G8–11325–00	1 – 5
	5 – 4
66M–11327–00–94	3 – 19
66M–11328–01	3 – 18
6BG–11351–01	3 – 7
	35 – 2
62Y–11356–00	5 – 18
	35 – 11
6C5–11411–10	4 – 1
6BG–11416–00	4 – 2
6BG–11416–10	4 – 2
6BG–11416–20	4 – 2
6BG–11416–30	4 – 2
6C5–11536–00	11 – 7
6C5–11537–10	11 – 2
6H4–11545–00	13 – 9
62Y–11557–00	11 – 8
67C–11603–01	4 – 7
67C–11604–01	4 – 7
67C–11605–01	4 – 7
69W–11631–01–97	4 – 6
62Y–11633–00	4 – 8
69W–11635–01	4 – 6
69W–11636–01	4 – 6
6C5–11650–10	4 – 3
6C5–11654–00	4 – 4
6CJ–11656–00	4 – 5
6CJ–11656–10	4 – 5
6CJ–11656–20	4 – 5
6CJ–11656–30	4 – 5
69W–12111–00	6 – 1
51Y–12114–00	6 – 4
62Y–12116–00	6 – 3
30X–12117–00	6 – 5
30X–12118–00	6 – 6
51Y–12119–00	6 – 7
69W–12121–10	6 – 2

PART NO. N° PIECES	REF. NO.
6C5–12146–00	6 – 8
62Y–12151–00	6 – 9
6C5–12151–00	6 – 12
62Y–12158–00	6 – 11
6C5–12158–00	6 – 14
64J–12159–00	6 – 10
6C5–12159–00	6 – 13
6C5–12171–00	11 – 1
6C5–12231–00	6 – 15
6C5–12233–00	6 – 16
6C5–12241–00	6 – 17
6C5–12243–00	6 – 18
6G8–12411–03	1 – 1
	3 – 11
688–12412–00	3 – 12
6C5–12413–00–9S	3 – 13
62Y–12414–00	1 – 2
	3 – 14
	35 – 3
6BG–12481–00	20 – 14
62Y–12481–10	3 – 10
66M–12535–00	3 – 20
6AW–12572–00	20 – 6
6C5–12576–00	8 – 16
6R3–12580–00	20 – 8
6C5–12858–A0	3 – 28
6C5–13105–03	7 – 10
62Y–13131–00	12 – 28
6C5–13161–00	7 – 13
6C5–1319C–00	7 – 11
6C5–13300–01	11 – 11
6C5–13329–00	11 – 12
	35 – 13
6CJ–13411–10	28 – 8
6C5–13428–01	8 – 20
6C5–13437–64	13 – 20
5GH–13440–80	1 – 4
	3 – 27
6C5–13542–00	10 – 3
6C5–13545–00	10 – 19
6C5–13546–00	10 – 2
6C5–13547–00	10 – 20
6C5–13548–00	10 – 24
6C5–13557–00	7 – 4
6C5–13577–00	10 – 11
6C5–13593–01	9 – 20
6C5–13641–01	7 – 2
6C5–13645–00	7 – 3

PART NO. N° PIECES	REF. NO.
6C5–13716–00	9 – 22
6C5–13739–00	10 – 1
6C5–13750–00	7 – 5
6C5–13761–00	7 – 16
6C5–13781–00	9 – 21
6C5–13906–02	9 – 9
6C5–13907–00	9 – 17
6C5–13910–10	9 – 16
6C5–13915–00	1 – 7
	9 – 19
6C5–13974–00	10 – 16
6C5–1410B–00	7 – 17
6C5–1410F–00	10 – 23
6C5–14127–10	9 – 18
6C5–14148–00	10 – 14
6BG–14149–00	10 – 9
6C5–14180–04	9 – 1
6C5–14182–20	9 – 2
6C5–14191–00	9 – 13
6C5–14200–03	7 – 1
6C5–14225–00	9 – 25
6C5–14251–00	10 – 13
6C5–14386–00	9 – 5
6C5–14397–00	9 – 14
6C5–14440–10	8 – 4
6C5–14446–00	7 – 15
6C1–14453–02	8 – 5
6C5–14453–02	8 – 5
6C1–14477–00	8 – 6
6AK–14477–01	8 – 6
62Y–14485–00	5 – 15
6C5–14496–00	7 – 9
6C5–14546–10	9 – 4
6C5–14567–00	9 – 15
6C5–14711–00–CA	27 – 12
6C5–14960–20	9 – 12
6C5–14984–10	1 – 8
	9 – 23
6C5–14985–00	9 – 3
6C5–15100–12	3 – 2
6C5–15311–02	28 – 1
6C5–15312–01	28 – 2
	36 – 2
6CJ–15316–01	28 – 4
6C5–1531A–10	5 – 24
6CJ–15333–10	28 – 10
6C5–15362–00	28 – 12
6G8–15363–00	5 – 22

PART NO. N° PIECES	REF. NO.
6C5–15378–00	5 – 25
6C5–15378–11	5 – 27
6C5–21337–10	9 – 24
6C5–21841–01	10 – 12
6C5–22435–00	25 – 20
6CJ–22471–10	25 – 13
6CJ–24135–00	20 – 21
6BG–24136–01	20 – 19
6YJ–24167–00	31 – 7
6YJ–24201–31	31 – 1
6C5–24251–00	1 – 9
6C5–24251–01	10 – 21
6Y1–24260–30	31 – 3
6Y1–24268–01	31 – 6
6G1–24304–10	12 – 1
6YL–24306–54	31 – 8
6C5–24313–10	12 – 3
6C5–24321–00	10 – 4
6C5–24322–00	10 – 5
6BG–24323–00	10 – 6
6CJ–24324–00	10 – 7
6CJ–24325–00	10 – 8
6Y1–24329–00	31 – 5
6BG–24329–01	19 – 25
62Y–24374–01	12 – 33
67F–24377–00	12 – 4
688–24378–00	20 – 10
	20 – 13
6C5–24379–00	10 – 18
6C5–24387–00	10 – 15
6C5–24410–01	12 – 24
62Y–24411–03	12 – 26
6C5–24415–00	12 – 25
6C5–2441R–10	9 – 6
6C5–2441T–10	9 – 7
62Y–24423–00	12 – 27
6C5–24444–00	10 – 10
62Y–24444–01	12 – 30
6C5–24453–00	9 – 8
62Y–24454–00	12 – 29
6D8–24469–00	12 – 14
6C5–24471–01	12 – 31
6D8–24519–00	12 – 15
6C5–2451B–00	10 – 22
6D8–24560–01	12 – 10
6D8–24562–00	12 – 13
6D8–24563–00	1 – 10
	12 – 11

PART NO. N° PIECES	REF. NO.
6D8–24564–00	1 – 11
	12 – 12
6C5–24566–11	12 – 16
6C5–24592–00	9 – 10
6YJ–24610–01	31 – 2
6C5–28100–01	12 – 37
67F–2812A–00	16 – 33
6C1–28199–7M–D0	12 – 38
6C1–28199–7M–E0	12 – 38
6C1–28199–7M–F0	12 – 38
6C1–28199–7M–G0	12 – 38
6C1–28199–7M–H0	12 – 38
6C1–28199–7M–S0	12 – 38
6C1–28199–8M–K0	12 – 39
6C1–28199–8M–L0	12 – 39
6C1–28199–8M–M0	12 – 39
6C1–28199–8M–N0	12 – 39
6C1–28199–8M–P0	12 – 39
6C1–28199–8M–R0	12 – 39
6C5–41113–11–9S	3 – 8
6C5–41114–10	3 – 15
	35 – 4
6C5–41131–00–CA	27 – 5
6C5–41133–00	27 – 4
	36 – 6
6C5–41134–00	27 – 8
	36 – 8
6C5–41135–00	27 – 11
	36 – 9
6C5–41137–03	27 – 1
688–41211–01	21 – 21
6H4–41237–00	21 – 22
62Y–42154–A0	21 – 24
6C5–42171–00	21 – 25
6C5–42335–00	21 – 30
6BG–42384–00	20 – 3
69W–42510–01–8D	24 – 1
6CY–42610–03	2 – 1
6C1–42610–32	2 – 1
6C5–42610–52	2 – 1
6CJ–42615–00	2 – 9
6CB–42617–00	13 – 19
6CJ–4261A–01	2 – 2
6BG–42649–00	2 – 12
6BG–42651–00	2 – 3
6BG–42652–00	2 – 6
6BG–42662–01	2 – 10
6CJ–42675–00	2 – 15

PART NO. N° PIECES	REF. NO.
6CJ–42676–00	2 – 16
60A–42677–00	2 – 13
6BG–42677–00	2 – 13
6C5–42677–10	2 – 13
60A–42678–10	2 – 14
6BG–42678–20	2 – 14
6C5–42678–50	2 – 14
6AH–42697–10	2 – 11
6CJ–42710–02–8D	19 – 1
62Y–42715–01	21 – 8
62Y–42716–01	19 – 6
61A–42717–00	19 – 8
65W–42717–00	19 – 7
69J–42723–01	15 – 32
6BG–42724–01	20 – 2
6CJ–42725–01	19 – 10
6CJ–42726–10	19 – 11
6H1–42726–31	20 – 1
68U–42727–01	19 – 24
6BG–42727–01	19 – 12
6BG–42741–10–8D	19 – 26
6BG–42748–01	19 – 4
6H4–42748–01	19 – 2
63P–42756–00	16 – 30
6BG–42761–00	19 – 9
6EE–42794–40	19 – 39
6EE–42794–50	19 – 40
6BG–42811–01	16 – 27
6BG–42815–00–8D	19 – 14
6BG–42816–00	19 – 19
6BG–42851–00	2 – 5
64J–43107–02–8D	22 – 28
6C1–43111–00–8D	22 – 1
6C5–43111–10–8D	23 – 1
6C1–43112–00–8D	22 – 2
6C5–43112–01–8D	23 – 3
69D–43126–01	22 – 35
6E5–43126–02	23 – 27
6C5–43131–00	23 – 12
63D–43131–01	22 – 11
66T–43144–00	19 – 21
6G5–43144–00	22 – 23
	23 – 24
6E5–43145–01	32 – 9
6G5–43148–00	22 – 19
	23 – 20
688–43160–01	22 – 24
688–43165–00	22 – 25

NUMERICAL INDEX
INDEX NUMERIQUE

PART NO. N° PIECES	REF. NO.
6C5–43181–00	22 – 14
	23 – 15
6C5–43185–00	22 – 15
	23 – 16
6C5–43311–01–8D	22 – 9
	23 – 10
682–43318–01	22 – 33
6C1–43631–00	22 – 32
63D–43691–00	22 – 31
6C5–43800–13	25 – 1
6CJ–43801–10	25 – 3
6CJ–43804–11	26 – 3
6CJ–43805–11	26 – 2
6EK–4380F–00	26 – 6
6C5–4380G–00	25 – 26
6C5–4380K–12	25 – 22
6CJ–4380R–10	25 – 8
6CJ–43810–10	25 – 2
6C5–43816–00	25 – 25
6C5–43817–10	25 – 23
6CJ–43818–00	22 – 40
	23 – 35
6CJ–4381B–10	25 – 17
6CJ–43821–10	25 – 5
62Y–43822–00	25 – 4
6CJ–43829–10	25 – 61
6EK–4382E–00	25 – 35
6D8–4382L–00	25 – 50
6C5–43830–10	25 – 28
6C5–43831–00	25 – 62
6C5–43833–00	22 – 41
	23 – 36
6C5–43834–00	22 – 42
	23 – 37
6D8–43841–00	25 – 29
6D8–43843–00	25 – 45
6D8–43844–00	25 – 44
6H1–43844–10	25 – 48
6CJ–43845–10	25 – 59
69A–4384F–00	25 – 33
6H1–4384G–11	25 – 47
62X–4384H–00	25 – 19
6D8–4384M–00	25 – 32
6D8–43851–00	25 – 40
6C6–43853–00	25 – 37
6C5–43854–00	25 – 52
6C5–43855–10	25 – 42
6C5–43856–10	25 – 49

PART NO. N° PIECES	REF. NO.
6C5–43861–00	25 – 11
	25 – 15
6CJ–43861–10	25 – 60
6CJ–43862–11	26 – 12
6CJ–43863–00	25 – 7
	25 – 9
6D8–43863–00	25 – 57
62X–4386K–00	26 – 7
6C5–43871–00	25 – 12
6C5–43875–00	25 – 16
6H1–43875–00	25 – 58
6CJ–43879–10	26 – 8
6C6–4387G–00	25 – 36
6CJ–43880–13	26 – 1
6CJ–43881–10	26 – 10
6EK–43882–00	26 – 11
6H1–43883–00	25 – 30
6C5–43885–01	24 – 18
6EK–43892–00	26 – 4
69J–43894–00	25 – 31
6C5–43895–00	25 – 51
6C5–43899–00	25 – 18
69J–4389J–00	25 – 24
	25 – 39
62Y–44117–01	21 – 2
62Y–44118–00–94	21 – 9
6C5–44120–03	21 – 5
69W–44121–00	21 – 1
688–44122–00	21 – 17
6C5–44122–00	21 – 6
62Y–44135–00	21 – 27
63D–44144–00	29 – 51
62Y–44151–00	29 – 50
6C5–44194–00	24 – 14
63D–44311–00	29 – 21
63D–44312–00	30 – 14
	36 – 25
63D–44316–00	29 – 27
	36 – 15
	36 – 28
63D–44322–00	29 – 22
	36 – 23
63D–44323–00	29 – 26
	36 – 26
6BG–44341–00	29 – 30
6H3–44352–00	29 – 23
	36 – 24
6C5–44361–00	30 – 1

PART NO. N° PIECES	REF. NO.
663–44366–01	30 – 3
	30 – 13
	36 – 30
663–44367–01	30 – 2
6CJ–44385–00	24 – 31
6BL–44391–00	20 – 5
69W–44514–00	24 – 10
69W–44526–01	24 – 12
6C5–44551–00–8D	24 – 16
6C5–44552–00–8D	24 – 19
69W–44555–00	24 – 20
6C5–44575–00	24 – 22
6C5–45111–00–8D	27 – 22
6C5–45123–00	27 – 14
	36 – 10
6C5–45135–10	28 – 13
6C5–45136–10	28 – 14
6C5–45155–01	27 – 17
6C5–45181–00–CA	27 – 9
63D–45214–00	29 – 10
63D–45215–00	29 – 11
65W–45251–00	1 – 12
	1 – 13
	22 – 5
	22 – 7
	23 – 6
	23 – 8
	23 – 25
663–45251–00	1 – 13
	22 – 29
67C–45251–00	1 – 17
	30 – 11
69W–45300–03–8D	29 – 1
69W–45301–00–8D	29 – 2
69W–45318–00	27 – 18
63D–45321–00	29 – 14
688–45341–10	29 – 9
63D–45344–01	29 – 33
63D–45361–02–8D	29 – 42
67C–45371–00	1 – 16
	30 – 9
63D–45375–00	30 – 5
663–45376–00	30 – 4
6E5–45378–00	29 – 17
69W–45501–00	29 – 35
6H4–45536–00	29 – 4
69W–45551–00	29 – 36
69W–45560–00	29 – 38

PART NO. N° PIECES	REF. NO.
663–45567–01	29 – 40
663–45567–10	29 – 40
663–45567–20	29 – 40
663–45567–30	29 – 40
663–45567–40	29 – 40
663–45567–50	29 – 40
663–45567–60	29 – 40
62Y–45571–00	29 – 41
63D–45577–00	29 – 45
63D–45577–10	29 – 45
63D–45577–20	29 – 45
63D–45577–30	29 – 45
63D–45577–40	29 – 45
63D–45577–50	29 – 45
63D–45577–60	29 – 45
663–45587–01	29 – 5
663–45587–10	29 – 5
663–45587–20	29 – 5
663–45587–30	29 – 5
663–45587–40	29 – 5
663–45587–50	29 – 5
663–45587–60	29 – 5
63D–45611–00	29 – 54
62Y–45631–00	29 – 56
67C–45633–01	29 – 61
663–45634–00	29 – 57
63D–45635–00	29 – 59
663–45987–02	30 – 15
66T–45997–00	30 – 16
6C5–46132–00	27 – 6
	36 – 7
6C5–46241–00	11 – 6
6Y8–48277–00	33 – 16
69W–48344–00	21 – 20
	21 – 34
65W–48511–01	24 – 35
6BG–48538–00	19 – 37
65W–61350–00	32 – 1
65W–61351–00	32 – 2
6C5–81145–00	7 – 7
6C5–81146–10	7 – 12
68V–81315–01	16 – 9
6C5–81336–01	15 – 2
6C5–81337–11	13 – 1
6C5–81410–01	13 – 8
6C5–81450–00	13 – 7
6CJ–81800–01	18 – 1
69J–81801–11	18 – 5

PART NO. N° PIECES	REF. NO.
67F–81807–00	18 – 10
67F–81808–00	18 – 8
67F–81809–00	18 – 19
67F–81810–00	18 – 3
67F–81813–00	18 – 6
6C5–81815–00	15 – 13
68F–81820–00	18 – 7
67F–81821–00	18 – 13
6C5–81822–00	17 – 1
6K7–81826–11	18 – 24
69J–81828–00	18 – 25
6C5–8182L–00	7 – 8
67F–81830–00	18 – 17
67F–81832–00	18 – 11
67F–81836–00	18 – 12
6C5–81839–00	18 – 21
67F–8183R–00	18 – 15
60V–8183T–00	18 – 18
6P2–8183X–00	15 – 22
69J–81840–11	18 – 4
67F–81841–00	18 – 14
60X–81842–00	18 – 20
67F–81846–00	18 – 26
67F–81850–00	18 – 2
67F–81857–00	18 – 9
6C5–81869–00	18 – 23
67F–81891–00	18 – 16
6C5–81919–00	16 – 34
60V–81925–00	15 – 10
6C5–81941–00	18 – 22
6C5–81942–00	16 – 21
6C5–81948–00	15 – 15
68V–8194A–00	15 – 25
60E–81950–00	15 – 1
63P–81950–00	15 – 21
6C5–81953–00	15 – 28
68V–81960–10	14 – 13
6EE–81994–40	13 – 24
6EE–81994–50	13 – 25
6EE–81995–40	13 – 21
6EE–81995–50	13 – 22
6AG–81996–00	13 – 26
6C5–82105–02	17 – 9
6G5–82119–00	15 – 27
67C–82127–10	24 – 29
6E5–82148–00	22 – 3
	23 – 4
67F–82151–00	16 – 2

PART NO. N° PIECES	REF. NO.
67F–82151–10	16 – 3
67F–8215B–10	16 – 4
67F–8215B–20	16 – 5
6C5–82171–00	14 – 15
6C5–82176–01	16 – 25
6CJ–82181–10	26 – 5
63P–82310–01	14 – 4
6C5–82316–01	14 – 10
6C5–82316–11	14 – 11
6A0–82317–01	8 – 8
	15 – 20
6C5–82317–01	14 – 18
6CJ–82340–00	14 – 5
6C5–82388–10	16 – 13
64J–82504–00	16 – 20
6Y8–82509–10	33 – 8
6Y8–82521–11	33 – 15
6C5–8252R–00	16 – 26
6C5–82553–00	16 – 10
6CJ–82554–00	16 – 16
69J–82563–01	15 – 32
6C5–8257V–00	15 – 4
68F–82582–00	15 – 12
6DA–82582–00	16 – 6
6DA–82582–10	16 – 7
69J–82587–01	15 – 36
61A–82588–01	16 – 17
6C5–82590–B0	16 – 1
6C5–82590–D2	16 – 1
60V–8259F–01	16 – 15
6C5–825E0–01	34 – 1
6X4–83383–00	33 – 5
6X4–83386–00	33 – 6
6E5–83558–00	24 – 33
6E5–83558–10	29 – 19
6BG–83614–00	15 – 33
62Y–83626–00	13 – 23
63D–83672–11	23 – 31
68F–83688–00	7 – 18
6Y8–8454G–00	33 – 11
6C5–85525–00	14 – 1
6C5–85525–10	15 – 6
6C5–85548–01	15 – 16
6C5–85561–00	13 – 13
62Y–85580–00	13 – 16
6CJ–85790–00	16 – 11
6C5–85885–00	7 – 6
6AK–8591A–05	14 – 17

NUMERICAL INDEX
INDEX NUMERIQUE

PART NO. N° PIECES	REF. NO.
6C1–8591A–25	14 – 17
6C5–8591A–25	14 – 17
6BG–86112–10	8 – 14
6C5–86120–00	8 – 12
6Y8–86260–03	33 – 2
6AA–86261–01	33 – 3
6Y8–86267–00	33 – 1
6C5–87226–00	9 – 11
6C5–W0001–04	35 – 1
6C5–W0001–22	36 – 1
63D–W0078–03	1 – 18
	36 – 22
6C5–W009A–13–9S	5 – 1
6C5–W009B–07–9S	3 – 1
90101–06020	22 – 6
	22 – 8
	23 – 7
	23 – 9
	23 – 26
90101–06063	21 – 10
90101–09M01	32 – 7
90101–12063	22 – 45
	23 – 41
90105–08060	6 – 20
90105–08M61	29 – 43
90105–09009	5 – 12
90109–06047	2 – 7
90109–06M65	5 – 8
90109–06M80	19 – 29
90109–06M86	15 – 35
	16 – 29
	16 – 32
	19 – 13
	19 – 22
	19 – 33
	19 – 36
	19 – 38
	20 – 18
	20 – 20
	20 – 23
90109–06M88	34 – 2
90109–08229	24 – 11
90109–12MA3	24 – 23
90116–10063	24 – 7
90119–06025	11 – 13
90119–06261	27 – 7
90119–06289	14 – 20
	15 – 19

PART NO. N° PIECES	REF. NO.
90119–06291	8 – 11
	19 – 3
90119–06297	8 – 10
	21 – 29
90119–06304	8 – 3
90119–06MA3	5 – 13
90119–06MA5	3 – 16
90119–08094	24 – 21
90119–08148	12 – 20
90119–08154	3 – 4
90119–08182	27 – 15
90119–08185	29 – 29
	36 – 29
90119–08190	8 – 2
90119–08195	30 – 8
90119–08202	27 – 16
90119–10054	22 – 43
	23 – 38
90119–10068	30 – 7
90152–05010	29 – 12
90152–06M01	22 – 30
90157–05M19	31 – 4
90159–04005	15 – 14
90159–05059	34 – 4
90159–06M14	16 – 23
90167–06M00	33 – 12
90170–09M03	32 – 5
90170–12138	29 – 37
90170–20137	13 – 10
90171–16011	30 – 18
90179–08003	15 – 11
90179–35001	11 – 9
90185–06M05	2 – 8
90185–08018	24 – 13
90185–09M01	32 – 4
90185–10027	24 – 8
90185–22M11	22 – 13
	23 – 14
90201–06M30	33 – 13
90201–10049	24 – 36
90201–10060	22 – 44
	23 – 39
90201–10081	32 – 8
90201–10144	11 – 5
90201–10M20	21 – 14
	32 – 3
90201–12062	22 – 46
	23 – 42

PART NO. N° PIECES	REF. NO.
90201–12426	22 – 47
	23 – 43
90201–12M07	19 – 18
90201–12M16	24 – 17
90201–13M19	24 – 26
90201–16014	6 – 19
90201–186F1	3 – 24
	35 – 5
90201–21M18	13 – 11
90201–22008	29 – 55
90201–22M05	24 – 27
90201–27M00	29 – 34
90201–30M00	24 – 2
90202–07M07	21 – 18
90202–21100	24 – 25
90206–10M04	21 – 32
90206–12052	19 – 17
90249–06M19	22 – 20
	23 – 21
90250–06023	29 – 60
90280–03017	11 – 10
90280–03024	29 – 25
	36 – 31
90340–08002	29 – 7
90340–14M06	3 – 25
	28 – 6
90340–18M09	3 – 23
90344–51003	3 – 6
90386–10025	22 – 17
	23 – 18
90386–10M16	22 – 16
	23 – 17
90386–12M37	19 – 15
90386–12MA2	19 – 16
90386–18M35	23 – 29
90386–18M92	23 – 28
90386–22MA4	22 – 12
	23 – 13
90386–30M60	24 – 6
90386–30M77	24 – 4
90386–30M78	24 – 3
90386–90M90	21 – 13
90387–04001	16 – 18
90387–05004	34 – 5
90387–06119	8 – 9
	14 – 19
	15 – 18
90387–06285	13 – 3

PART NO. N° PIECES	REF. NO.
90387–06M43	19 – 31
90387–06M45	21 – 28
90387–06M69	9 – 26
	19 – 5
90387–06M82	21 – 33
90387–08095	12 – 19
90387–10M42	32 – 6
90387–16003	22 – 37
90387–16004	22 – 38
90389–22M01	30 – 17
90430–06014	5 – 9
	35 – 9
90430–08003	1 – 15
	29 – 8
	36 – 11
90430–14115	3 – 26
	16 – 12
	35 – 6
90430–14M09	1 – 14
	28 – 7
	36 – 3
90445–07ME8	29 – 18
90445–09036	20 – 9
90445–09220	20 – 11
90445–09304	20 – 16
90445–096H2	20 – 12
90445–13M02	12 – 5
90445–13M36	12 – 22
90446–13M11	12 – 7
90447–19009	23 – 40
90450–50001	8 – 7
90462–08067	20 – 17
90462–20005	19 – 32
90464–06001	14 – 12
90464–07M05	14 – 7
90464–07M41	14 – 6
90464–07M56	7 – 14
90464–09130	20 – 22
90464–09M49	19 – 34
90464–10006	24 – 32
90464–12006	8 – 18
90464–12183	15 – 9
	16 – 31
90464–13013	14 – 8
90464–13227	12 – 8
90464–15008	8 – 17
90464–18205	16 – 28
90464–18246	14 – 3

PART NO. N° PIECES	REF. NO.
90464–99004	22 – 36
	23 – 33
90465–08M89	15 – 34
90465–11M10	8 – 19
	10 – 17
	12 – 6
	15 – 29
	19 – 35
	20 – 4
	20 – 15
	23 – 34
	24 – 28
	24 – 34
	29 – 20
	33 – 10
	34 – 6
90465–11M59	28 – 5
90465–13M11	16 – 8
90465–13M18	8 – 22
	17 – 14
	34 – 7
90465–13M24	16 – 24
90465–13M39	16 – 22
90465–13M97	13 – 18
	15 – 31
	15 – 37
90467–09M17	12 – 9
90467–10M04	12 – 23
	12 – 36
90468–18008	21 – 16
	21 – 19
	21 – 35
90480–06M19	13 – 5
90480–09M12	9 – 27
90480–10M58	12 – 18
90480–12072	17 – 10
90480–12314	13 – 6
90480–13M24	19 – 30
90480–15M31	13 – 4
90480–16013	12 – 17
90480–24003	17 – 7
90501–12082	21 – 11
90501–18001	29 – 58
90502–16M02	22 – 27
90506–14M24	22 – 21
	23 – 22
90506–18023	19 – 23
91318–03005	25 – 56

PART NO. N° PIECES	REF. NO.
91318–03025	25 – 55
91318–05030	25 – 54
91318–05045	25 – 27
91380–05020	25 – 64
91490–16010	21 – 26
91490–20015	21 – 15
91490–30025	30 – 19
91690–30012	22 – 26
91690–30020	22 – 18
	23 – 19
92903–08100	17 – 13
92990–06100	34 – 3
92990–08200	6 – 21
93101–22M00	29 – 49
	36 – 20
93101–25M57	29 – 31
	36 – 16
93101–35002	4 – 11
	35 – 8
93102–37M40	11 – 14
	35 – 14
93102–43M42	4 – 10
	35 – 7
93103–18011	27 – 2
	36 – 5
93106–09014	29 – 15
	36 – 12
93210–04279	33 – 9
93210–04N51	25 – 46
93210–064A5	25 – 41
93210–07003	29 – 52
	36 – 21
93210–12790	28 – 9
	36 – 4
93210–13M63	5 – 7
93210–16275	32 – 10
93210–24M79	5 – 23
	12 – 34
	35 – 12
	35 – 15
93210–29M94	24 – 5
93210–33MG4	29 – 16
	36 – 13
93210–44006	25 – 10
93210–48001	29 – 32
	36 – 17
93210–49001	25 – 6
93210–59MG7	29 – 24

NUMERICAL INDEX
INDEX NUMERIQUE

PART NO. N° PIECES	REF. NO.
93210–59MG7	36 – 14
	36 – 27
93210–64488	25 – 63
93210–69MG6	29 – 47
	36 – 19
93210–74MG5	29 – 46
	36 – 18
93306–001U1	29 – 44
93315–32224	29 – 3
93317–22204	29 – 48
93332–00001	29 – 6
93332–00092	29 – 39
93410–16097	22 – 39
93410–18M05	23 – 30
93410–28M06	24 – 9
93420–36M01	27 – 19
93450–17129	4 – 9
93501–04M02	21 – 12
93501–08001	25 – 43
93503–16003	25 – 14
93505–32038	25 – 38
93604–08062	29 – 28
93604–10M03	3 – 9
	27 – 10
93604–26256	25 – 53
93605–17002	11 – 3
93606–12019	3 – 3
	27 – 21
	28 – 3
	30 – 6
93606–19002	23 – 2
93608–12M05	8 – 1
	27 – 3
93700–06002	22 – 10
	23 – 11
94702–00418	1 – 6
	5 – 31
95023–06030	13 – 12
	13 – 14
95333–08600	17 – 12
95380–05600	12 – 32
	29 – 13
95380–05700	21 – 23
95380–05800	2 – 4
95380–06600	8 – 13
	19 – 27
95380–08600	12 – 21
	17 – 4

PART NO. N° PIECES	REF. NO.
95380–12600	22 – 48
	23 – 44
95380–12700	24 – 24
95680–08330	17 – 3
95780–06300	33 – 14
95812–06025	28 – 11
95817–10035	11 – 4
95D95–06020	13 – 2
95D95–06035	21 – 31
97513–06535	3 – 5
97513–08545	17 – 8
97595–05512	3 – 21
	13 – 17
97595–05514	21 – 7
97602–04316	26 – 9
97607–04210	5 – 17
97780–60520	20 – 7
97780–60620	15 – 3
	15 – 17
	15 – 30
	33 – 7
97880–06035	33 – 12
97885–06008	22 – 4
	23 – 5
	24 – 30
97980–06216	33 – 4
97980–06325	19 – 28
97985–04116	16 – 19
97985–06216	23 – 32
97D95–06010	22 – 34
97D95–06014	19 – 20
97E75–06525	27 – 13
97E75–08530	24 – 15
97E75–10545	27 – 20
97E95–06512	22 – 22
	23 – 23
97E95–06514	5 – 26
	5 – 28
	14 – 2
	14 – 16
	15 – 5
	16 – 14
97E95–06516	8 – 15
	8 – 21
97E95–06520	3 – 22
	5 – 19
	5 – 21
	5 – 30

PART NO. N° PIECES	REF. NO.
97E95–06520	15 – 24
	21 – 3
97E95–06525	12 – 2
	14 – 9
	14 – 14
	21 – 4
97E95–06530	12 – 35
97E95–06610	15 – 23
	15 – 26
97E95–06620	15 – 7
	15 – 8
	17 – 11
97E95–08525	17 – 6
	30 – 10
97E95–08535	17 – 5
	30 – 12
98980–05025	5 – 5
99001–08600	29 – 53
99002–03600	25 – 34
99009–32500	25 – 21
99530–08012	5 – 11
	13 – 15
99530–10114	17 – 2

PART NO. N° PIECES	REF. NO.

PART NO. N° PIECES	REF. NO.

PART NO. N° PIECES	REF. NO.