YAMAHA

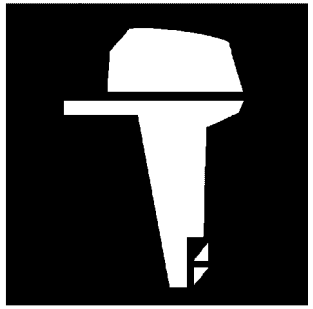

PARTS CATALOGUE
CATALOGUE DE PIECES DETACHEES

E60HMHD'24 (69DS)

YAMAHA
GENUINE
Parts & Accessories

1Y69D-300FA

( )

E60HMHD
PARTS CATALOGUE
©2024 by Yamaha Motor Co., Ltd.
1st edition, July 2024
All rights reserved.
Any reprinting or unauthorized use
without the written permission of
Yamaha Motor Co., Ltd.
is expressly prohibited.
Printed in Japan.

E60HMHD
CATALOGUE DE PIECES DETACHEES
©2024 par Yamaha Motor Co., Ltd.
1re édition, juillet 2024
Tous droits réservés
Toute réimpression ou utilisation
non autorisée sans la permission écrite
de Yamaha Motor Co., Ltd.
est formellement interdite.
Imprimé au Japon

FOREWORD

This Parts Catalogue is related to the parts for the model(s) on the cover page. When you are ordering replacement parts, please refer to this Parts Catalogue and quote both part numbers and part names correctly.

1. Modifications or additions which have been made after the issue of the Parts Catalogue will be announced in the Parts News.
   It is advisable that you make the necessary corrections to the Parts Catalogue according to the Parts News.

2. Abbreviations
   The following abbreviations are used in this Parts Catalogue.
   "UR" Use specified parts number.
   "UN" Use as many as needed.
   "AP" Alternate Parts
   "LM" Locally Made (Parts need to be ordered locally)
   "F#" Frame No. (Applicable machine No.)
   "O/S" Over Size

3. The number of components for assembly
   - Parts, which are to be supplied in an assembly, are listed with a dot (.) in front of the part name as shown below.
   - The numeral appearing to the right of each component part indicates the quantity of parts for each assembly unit.

PART NO.	DESCRIPTION	Q'TY	REMARKS
2F5–83310–60	FRONT FLASHER LIGHT ASSY	2	
115–83311–60	.BULB (6V–18W)	1	

4. Applicable colours of graphics are represented in the "REMARKS" as shown below.

PART NO.	DESCRIPTION	Q'TY	REMARKS
2N4–24110–00–X5	FUEL TANK COMP.	2	MXR
3J1–24240–10	.GRAPHIC, FUEL TANK	1	FOR MXR

5. Note that the illustrations for reference in finding parts numbers are not to be used for assembling. When assembling, please use the applicable service manual.

6. The asterisk (*) before a reference number indicates modified items after the first edition.

7. Applicable Serial No.
   Engine Serial No.

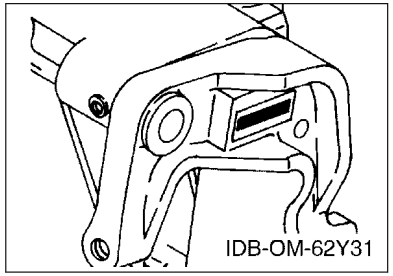

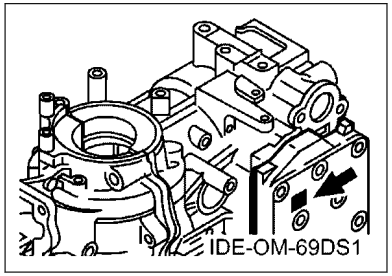

8. Applicable Engine Starting Serial No.

Model	Serial No.	Model	Serial No.
E60H	6K5K-1098724		

9. Applicable Colour Code

Abbreviation	Colour Name	Colour Code
DBN1	DARK BLUISH GRAY 1	008D

10. Quantity Column Information

Column No.	Name Of Q'ty Column	Applicable Model
1	69DS	E60HMHD

AVANT–PROPOS

Ce catalogue de pièces détachées concerne les pièces pour le(s) modèle(s) indiqué(s) sur la page de couverture. Lorsque vous commandez des pièces de rechange, veuillez vous référer à ce catalogue de pieces détachées et indiquer clairement les numéros et les noms des pièces détachées.

1. Les modifications ou ajouts ayant été effectués après la parution du catalogue de pièces détachées seront décrits dans les Bulletins d'information concernant les pièces détachées.
   Il est recommandé que vous apportiez les corrections nécessaires au catalogue des pièces détachées en vous référant aux Bulletins d'information.

2. Abréviations
   Dans ce catalogue, les abréviations suivantes sont utilisées:
   "UR" Utiliser le numéro de pièces spécifié.
   "UN" Utiliser autant que nécessaire.
   "AP" Pièces de substitution
   "LM" Fabrication locale (les pièces doivent être commandées localement.)
   "F#" N° de cadre (applicable au N° de série)
   "O/S" Surdimensionné

3. Nombre de pièces d'un assemblage
   - Les pièces fournies comme composants d'un assemblage sont précédées d'un point (.) de la manière indiquée ci–dessous.
   - Le chiffre apparaissant à la droite de chaque composant indique la quantité de pièces pour chaque unité d'assemblage.

N° PIECES	DESCRIPTION	QTE	REMARQUES
2F5–83310–60	ENS. CLIGNOTANT AVANT	2	
115–83311–60	.AMPOULE (6V–18W)	1	

4. Les couleurs concernant les graphiques sont indiquées dans la colonne "REMARQUES", comme indiqué ci–dessous.

N° PIECES	DESCRIPTION	QTE	REMARQUES
2N4–24110–00–X5	RESERVOIR A ESSENCE.	2	MXR
3J1–24240–10	.GRAPHIQUE	1	POUR MXR

5. Veuillez noter que les illustrations sont indiquées à titre de référence pour trouver les numéros de pièces, non pour être utilisées lors de l'assemblage. Lors de l'assemblage, veuillez utiliser le manuel d'entretien adéquat.

6. L'astérisque (*) placé devant un numéro de référence indique des éléments qui ont été modifiés après la première édition.

7. N° de série applicable
   N° de Série du moteur

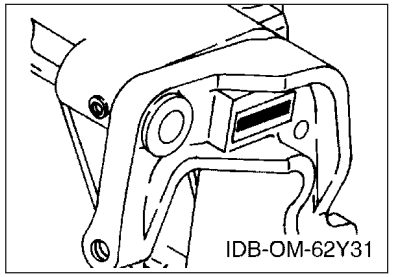

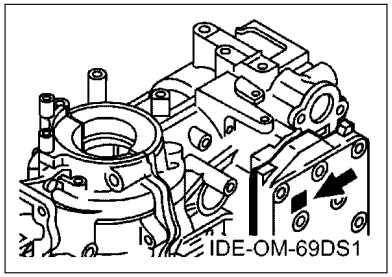

8. N° de série initial du moteur applicable

Modèle	N° de série	Modèle	N° de série
E60H	6K5K-1098724		

9. Code couleur applicable

Abréviation	Nom de la couleur	Code couleur
DBN1	DARK BLUISH GRAY 1	008D

10. Informations relatives à la colonne Quantité

N° de la colonne	Nom de la colonne Qté	Modèle applicable
1	69DS	E60HMHD

CONTENTS

SCHEDULED SERVICE PARTS.....1
TOP COWLING.....2
CYLINDER & CRANKCASE.....3
CRANKSHAFT & PISTON.....5
INTAKE.....6
CARBURETOR.....7
FUEL.....9
STARTER.....11
GENERATOR.....14
ELECTRICAL.....15
BOTTOM COWLING.....16
STEERING.....18
CONTROL.....20
BRACKET 1.....22
BRACKET 2.....24
UPPER CASING.....26
LOWER CASING & DRIVE 1.....27
LOWER CASING & DRIVE 2.....31
FUEL TANK.....33
REPAIR KIT 1.....34
REPAIR KIT 2.....36

INDEX

NUMERICAL INDEX.....37

TABLE DES MATIERES

PIECES MAINTENANCE PERIODIQUE.....1
CAPOT SUPERIEUR..... 2
CYLINDRE & CARTER..... 3
VILEBREQUIN & PISTON.....5
ADMISSION.....6
CARBURATEUR..... 7
CARBURANT..... 9
DEMARREUR.....11
GENERATRICE.....14
ELECTRIQUE.....15
CAPOT INFERIEUR.....16
DIRECTION.....18
COMMANDE..... 20
SUPPORT 1..... 22
SUPPORT 2..... 24
FOURREAU.....26
BOITIER D'HELICE TRANSMISSION1.....27
BOITIER D'HELICE TRANSMISSION2.....31
RESERVOIR A CARBURANT.....33
KITS DE REPARATION 1..... 34
KITS DE REPARATION 2..... 36

INDEX

INDEX NUMERIQUE.....37

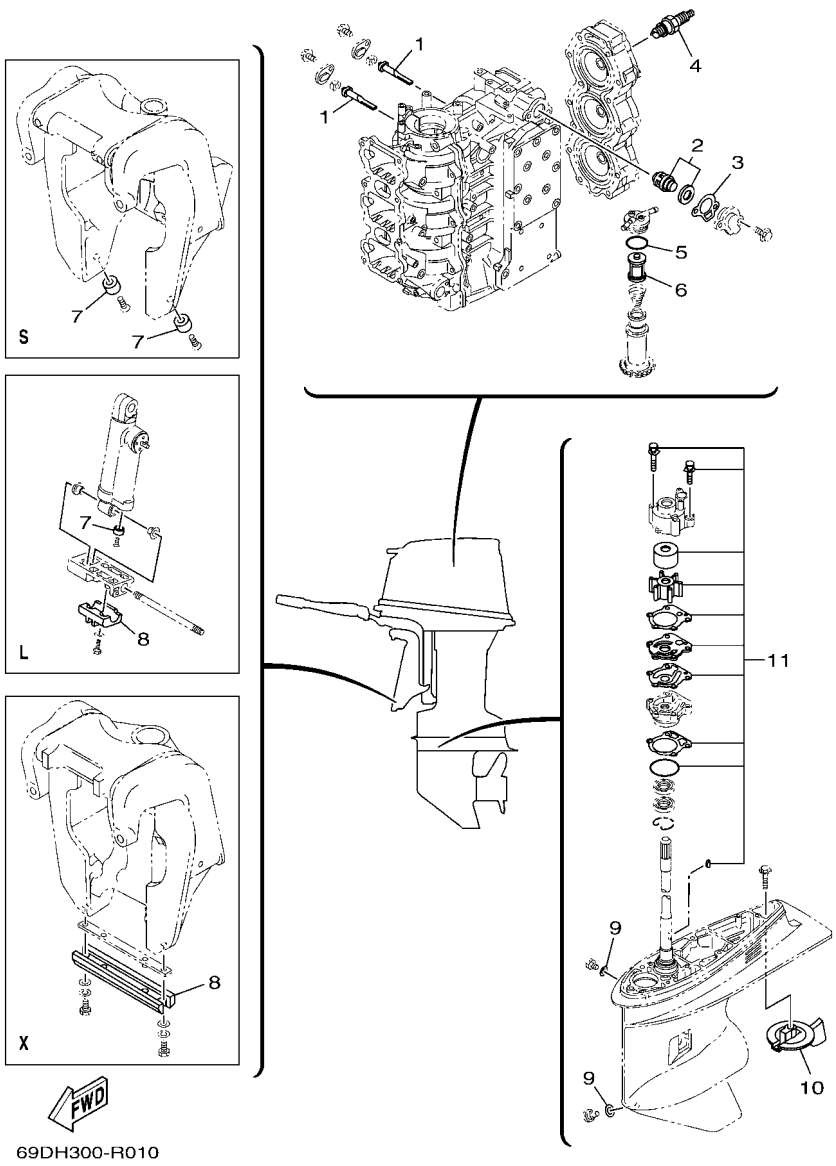

FIG. 1 SCHEDULED SERVICE PARTS — PIECES MAINTENANCE PERIODIQUE

REF. NO.	PART NO. N° PIECES	DESCRIPTION DESCRIPTION	69G9					REMARKS REMARQUES
1	6H3–11325–01	ANODE ANODE	2					
2	6H3–12411–11	THERMOSTAT THERMOSTAT	1					
3	62Y–12414–01	GASKET, COVER JOINT, COUVERCLE	1					
4	94702–00160	PLUG, SPARK (NGK B8HS-10) BOUGIE D'ALLUMAGE(NGK B8HS-10)	3					UR UR
	94702–00247	PLUG, SPARK (NGK BR8HS-10) BOUGIE D'ALLUMAGE(NGK BR8HS-10	3					UR UR
5	61A–24564–01	O-RING JOINT TORIQUE	1					
6	61A–24563–02	ELEMENT, FILTER ELEMENT, FILTRE	1					
7	663–45251–00	ANODE ANODE	1					UN UN
8	63D–45251–01	ANODE ANODE	1					UR L(22.5") UR L(22.5")
	6H1–45251–03	ANODE ANODE	1					UR X(25.5") UR X(25.5")
9	90430–08003	GASKET JOINT	2					
10	67F–45371–00	TAB-TRIM ANODE DERIVE	1					
11	69D–W0078–00	WATER PUMP REPAIR KIT KIT DE REPARATION DE LA POMPE	1					

FIG. 2 TOP COWLING — CAPOT SUPERIEUR

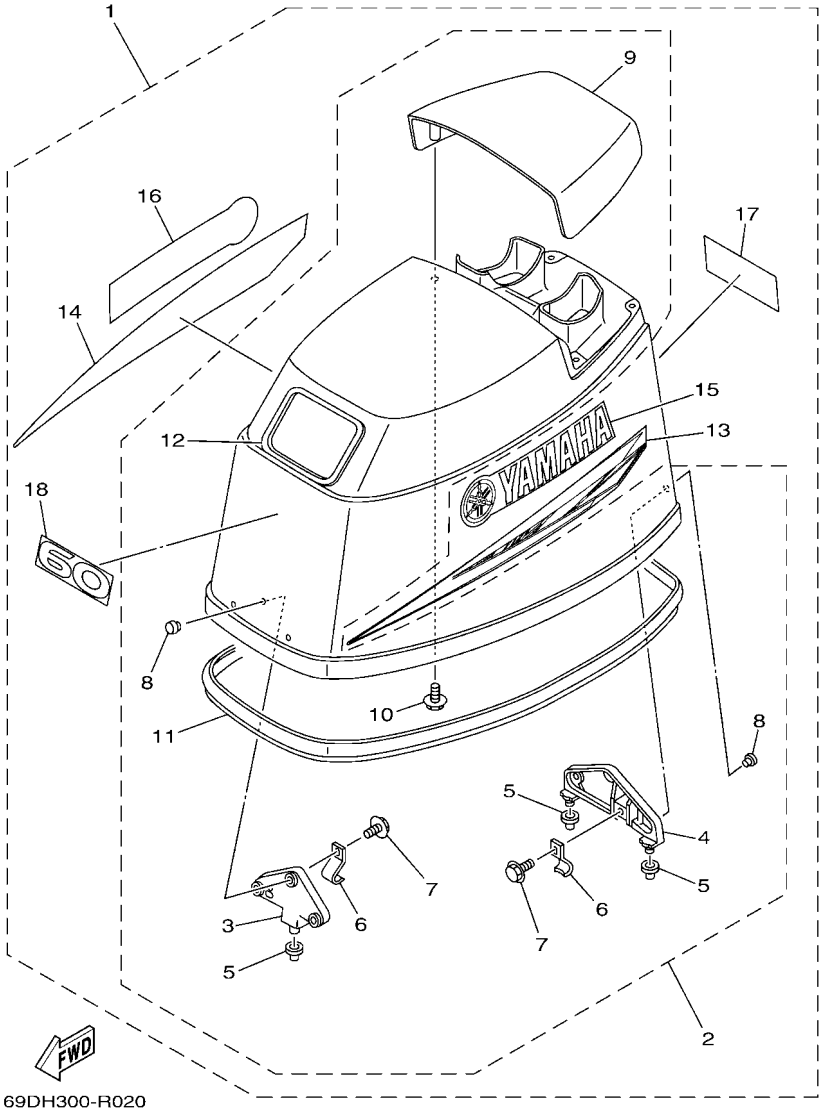

REF. NO.	PART NO. N° PIECES	DESCRIPTION DESCRIPTION	69G					REMARKS REMARQUES
1	69D–42610–32	TOP COWLING ASSY CAPOT (ENS.)	1					
2	6K5–4261A–02	.TOP COWLING W/O GRAPHICS .CAPOT SUPERIEUR SANS GRAPHIQUE	1					
3	6H3–42647–00	..HOLDER, CLAMP BAND ..SUPPORT, SANDOW DE SERRAGE	1					
4	6H3–42649–00	..HOLDER, CLAMP BAND ..SUPPORT, SANDOW DE SERRAGE	1					
5	663–42662–01	..DAMPER ..AMORTISSEUR	3					
6	6H3–42652–00	..HOOK ..CROCHET	2					
7	97E95–06616	..BOLT, HEXAGON W/W DEEP RECESS ..VIS HEXAGONAL AVC RONDELLE	2					
8	90266–06009	..RIVET ..RIVET	6					
9	6H3–42613–01–8D	..MOLDING, AIR DUCT ..MANCHON A AIR	1					
10	97E95–06516	..BOLT, HEXAGON W/W DEEP RECESS ..VIS HEXAGONAL AVC RONDELLE	4					
11	6H3–42615–01	..SEAL ..JOINT	1					
12	6K5–15761–00	..SEAL, RUBBER 1 ..JOINT CAOUTCHOUC 1	1					
13	688–42675–51	.GRAPHIC, SIDE 1 .EMBLEME	1					
14	688–42676–51	.GRAPHIC, SIDE 2 .EMBLEME	1					
15	63D–42681–41	.MARK, COWLING .ADHESIF, CAPOT	1					
16	63D–42681–41	.MARK, COWLING .ADHESIF, CAPOT	1					
17	6H2–42678–11	.GRAPHIC, REAR .ADHESIF, ARRIERE	1					
18	6H2–42678–11	.GRAPHIC, REAR .ADHESIF, ARRIERE	1					

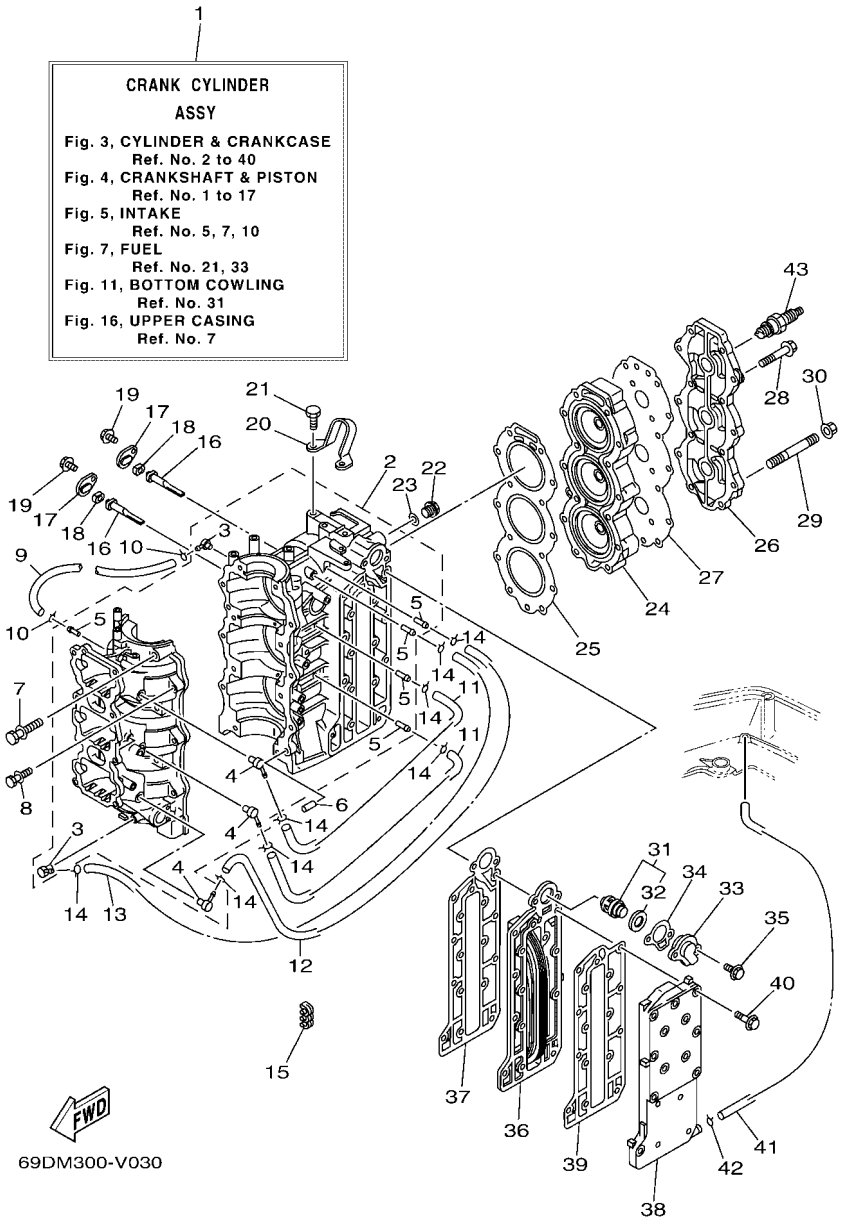

FIG. 3 CYLINDER & CRANKCASE — CYLINDRE & CARTER

REF. NO.	PART NO. N° PIECES	DESCRIPTION DESCRIPTION	69DS					REMARKS REMARQUES
1	69D–W0090–04–1S	CRANK CYLINDER ASSY EMBIELLAGE CYLINDRE (ENS.)	1					
2	69D–15100–00	CRANKCASE ASSY CARTER DE MOTEUR COMPLET	1					
3	688–11370–01	.CHECK VALVE ASSY .CLAPET (ENS.)	2					
4	650–11370–01	.CHECK VALVE ASSY .CLAPET (ENS.)	3					
5	624–14485–00	.PIPE, JOINT .DURITE	5					
6	93608–12063	PIN, DOWEL AXE	2					
7	90119–10005	BOLT, WITH WASHER BOULON, AVEC RONDELLE	8					
8	90119–08M64	BOLT, WITH WASHER BOULON, AVEC RONDELLE	6					
9	90445–07M44	HOSE (L250) DURITE (L250)	1					
10	90467–06016	CLIP JONC	2					
11	90445–07M02	HOSE (L167) DURITE (L167)	2					
12	90445–07M45	HOSE (L340) DURITE (L340)	1					
13	90445–07M82	HOSE (L440) DURITE (L440)	1					
14	90467–06016	CLIP JONC	8					
15	90464–07M05	CLAMP BRIDE	1					
16	6H3–11325–01	ANODE ANODE	2					
17	6H3–11327–00–94	COVER, ANODE COUVERCLE ANODE	2					
18	6H3–11328–01	GROMMET, ANODE PASSE-FIL	2					
19	90119–06023	BOLT, WITH WASHER BOULON, AVEC RONDELLE	2					
20	6K5–11119–01	HANGER, ENGINE ANNEAU, LEVAGE	1					
21	90101–08002	BOLT BOULON	2					
22	90340–14M06	PLUG, STRAIGHT SCREW PLOT, FILETE DROIT	1					
23	90430–14115	GASKET JOINT	1					
24	6H3–11111–01–1S	HEAD, CYLINDER 1 CULASSE, 1	1					
25	6H3–11181–A2	GASKET, CYLINDER HEAD 1 JOINT, DE CULASSE 1	1					
26	6H3–11191–00–1S	COVER, CYLINDER HEAD 1 COUVERCLE, CULASSE 1	1					
27	6H3–11193–A1	GASKET, HEAD COVER 1 JOINT, COUVERCLE DE CULASSE 1	1					

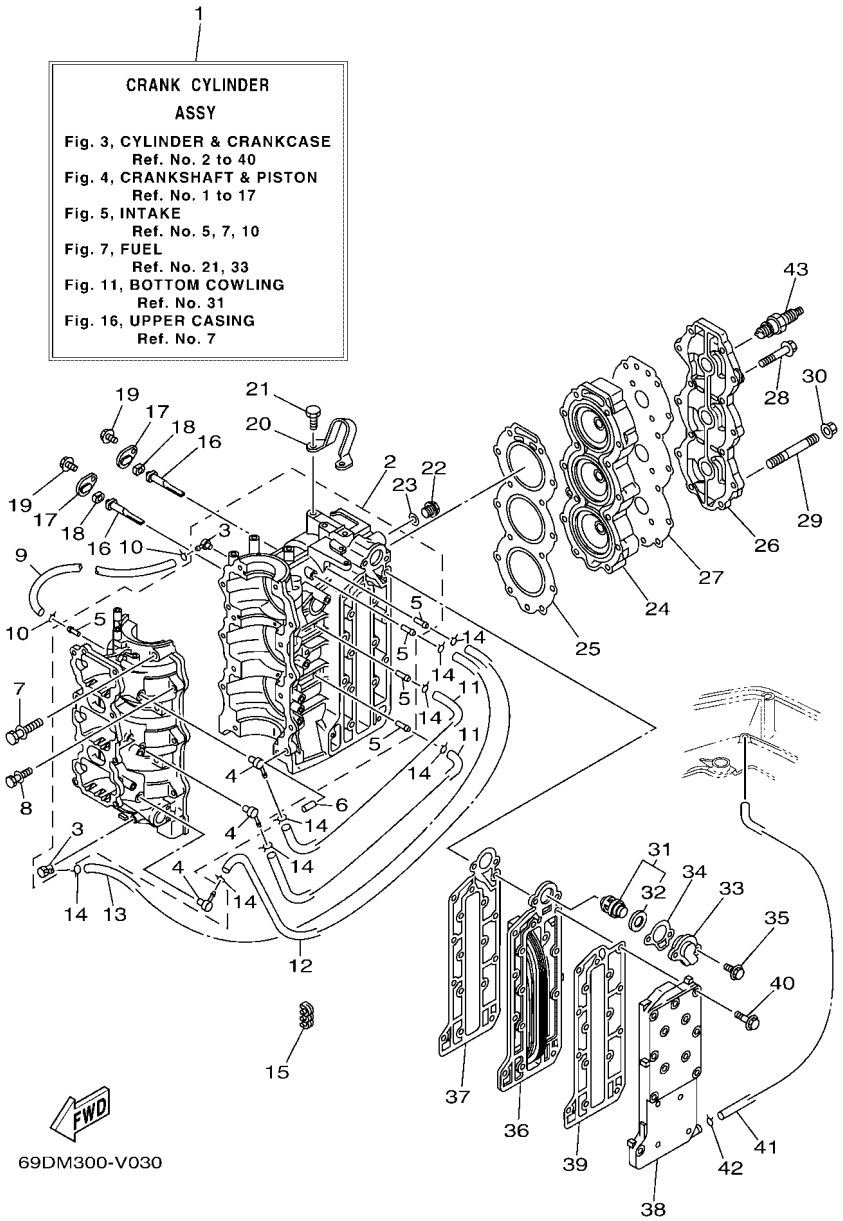

FIG. 3 CYLINDER & CRANKCASE — CYLINDRE & CARTER

REF. NO.	PART NO. N° PIECES	DESCRIPTION DESCRIPTION	69D9					REMARKS REMARQUES
28	90119–08MA5	BOLT, WITH WASHER BOULON, AVEC RONDELLE	13					
29	90116–08M69	BOLT, STUD GOUJON	1					
30	90179–08M34	NUT ECROU	1					
31	6H3–12411–11	THERMOSTAT THERMOSTAT	1					
32	688–12412–00	.SEAL, THERMOSTAT .JOINT, THERMOSTAT	1					
33	6H3–12413–00–1S	COVER, THERMOSTAT COUVERCLE, THERMOSTAT	1					
34	62Y–12414–01	GASKET, COVER JOINT, COUVERCLE	1					
35	90119–06MA3	BOLT, WITH WASHER BOULON, AVEC RONDELLE	2					
36	6H3–41111–01–1S	INNER COVER, EXHAUST PLAQUE, ECHAPPEMENT	1					
37	6H3–41112–A0	GASKET, EXHAUST INNER COVER JOINT, PLAQUE D'ECHAPPEMENT	1					
38	6H3–41113–02–1S	OUTER COVER, EXHAUST COUVERCLE, ECHAPPEMENT	1					
39	6H3–41114–A0	GASKET, EXHAUST OUTER COVER JOINT, COUVERCLE D'ECHAPPEMENT	1					
40	90119–06MA5	BOLT, WITH WASHER BOULON, AVEC RONDELLE	16					
41	663–24312–01	PIPE 2 DURITE 2	1					
42	90467–08004	CLIP JONC	1					
43	94702–00247	PLUG, SPARK (NGK BR8HS-10) BOUGIE D'ALLUMAGE(NGK BR8HS-10	3					

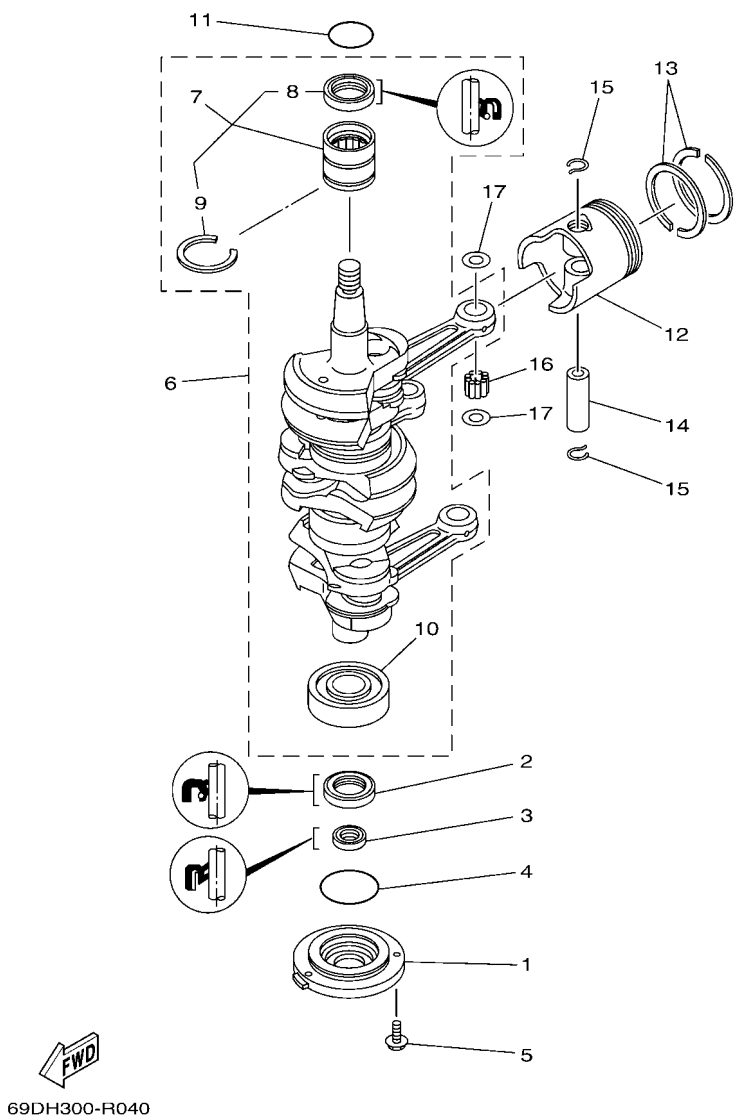

FIG. 4 CRANKSHAFT & PISTON — VILEBREQUIN & PISTON

REF. NO.	PART NO. N° PIECES	DESCRIPTION DESCRIPTION	69DS					REMARKS REMARQUES
1	6H3–15359–00–94	HOUSING, OIL SEAL LOGEMENT, BAGUE D'ETANCHEITE	1					
2	93102–30009	OIL SEAL JOINT SPY	1					
3	93106–18001	OIL SEAL JOINT SPY	1					
4	93210–65M50	O-RING JOINT TORIQUE	1					
5	97E95–06520	BOLT, HEXAGON W/W DEEP RECESS VIS HEXAGONAL AVC RONDELLE	3					
6	69D–W1140–01	CRANKSHAFT ASSY VILEBREQUIN COMPLET	1					
7	93311–636U6	.BEARING .ROULEMENT	1					
8	93102–36M24	..OIL SEAL ..JOINT SPY	1					
9	93440–49M04	..CIRCLIP ..CIRCLIP	1					
10	93306–306V1	.BEARING .ROULEMENT	1					
11	93210–46M16	O-RING JOINT TORIQUE	1					
12	6K5–11631–03–95	PISTON (STD) PISTON (STD)	3					
	6K5–11635–03	PISTON (0.25MM O/S) PISTON (0.25MM O/S)	3					AP AP
	6K5–11636–03	PISTON (0.50MM O/S) PISTON (0.50MM O/S)	3					AP AP
13	6K5–11601–02	PISTON RING SET (STD) JEU DE SEGMENTS (STD)	3					
	6K5–11601–12	PISTON RING SET (0.25MM O/S) JEU DE SEGMENTS (0.25MM O/S)	3					AP AP
	6K5–11601–22	PISTON RING SET (0.50MM O/S) JEU DE SEGMENTS (0.50MM O/S)	3					AP AP
14	6H3–11633–00	PIN, PISTON AXE, PISTON	3					
15	688–11634–10	CLIP, PISTON PIN AGRAFE, AXE DE PISTON	6					
16	93603–18M09	PIN, DOWEL CLAVETTE	84					
17	90201–20417	WASHER, PLATE RONDELLE, PLATE	6					

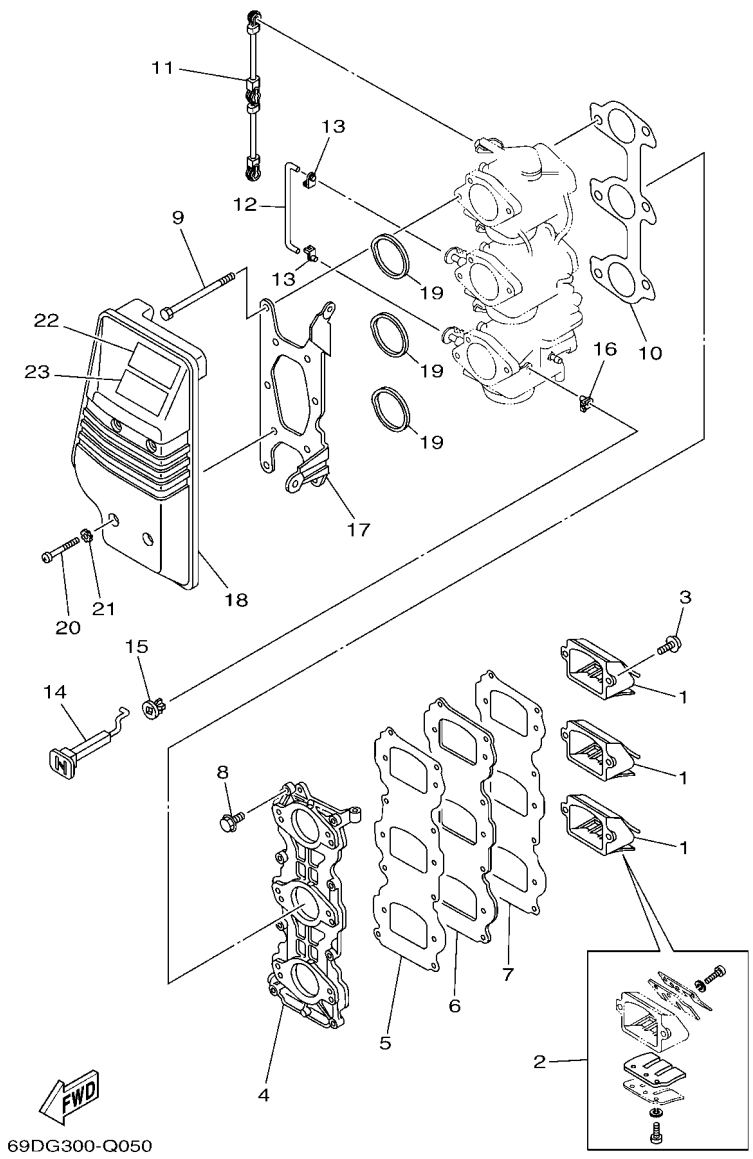

FIG. 5 INTAKE — ADMISSION

REF. NO.	PART NO. N° PIECES	DESCRIPTION DESCRIPTION	69DG					REMARKS REMARQUES
1	6H2–13610–00	REED VALVE ASSY CLAPET COMPLET	3					
2	688–W0004–00	.REED SET .JEU DE CLAPETS	1					
3	97980–05216	SCREW, WITH WASHER VIS, AVEC RONDELLE	6					
4	6H3–13641–04	MANIFOLD, INTAKE 1 TUBULURE, ADMISSION 1	1					
5	6H3–13621–A1	GASKET, VALVE SEAT JOINT, SIEGE DE CLAPET	1					
6	6H3–13624–00	PLATE,REED VALVE PLAQUE DE CLAPET	1					
7	6H3–13622–A1	GASKET, VALVE SEAT JOINT, SIEGE DE CLAPET	1					
8	90119–06MA3	BOLT, WITH WASHER BOULON, AVEC RONDELLE	8					
9	97D95–06095	BOLT, HEXAGON DEEP RECESS VIS HEXAGONAL	6					
10	6H3–14198–A1	GASKET JOINT	1					
11	6H3–41217–00	ROD, ACCEL. LEVER TIGE, LEVIER ACCELERATION	1					
12	6H3–41257–00	ROD, CHOKE 2 TRINGLE 2, STARTER	2					
13	661–41262–02	JOINT, CHOKE LEVER RACCORD, LEVIER DE STARTER	4					
14	6H3–41271–01	KNOB, CHOKE BOUTON DE STARTER	1					
15	689–41273–00	GROMMET PASSE-FIL	1					
16	661–41262–02	JOINT, CHOKE LEVER RACCORD, LEVIER DE STARTER	1					
17	6H3–14413–12	STAY SUPPORT	1					
18	6H3–14440–02	SILENCER ASSY, INTAKE SIENCIEUX D'ADMISSION	1					
19	6H3–14457–02	SEAL JOINT	3					
20	97885–06045	SCREW, PAN HEAD VIS, A ENCOCHE	4					
21	90209–06M05	WASHER RONDELLE	4					
22	6EE–81994–40	LABEL, SAFETY ETIQUETTE, SECURITE	1					
23	6EE–81994–50	LABEL, SAFETY ETIQUETTE, SECURITE	1					

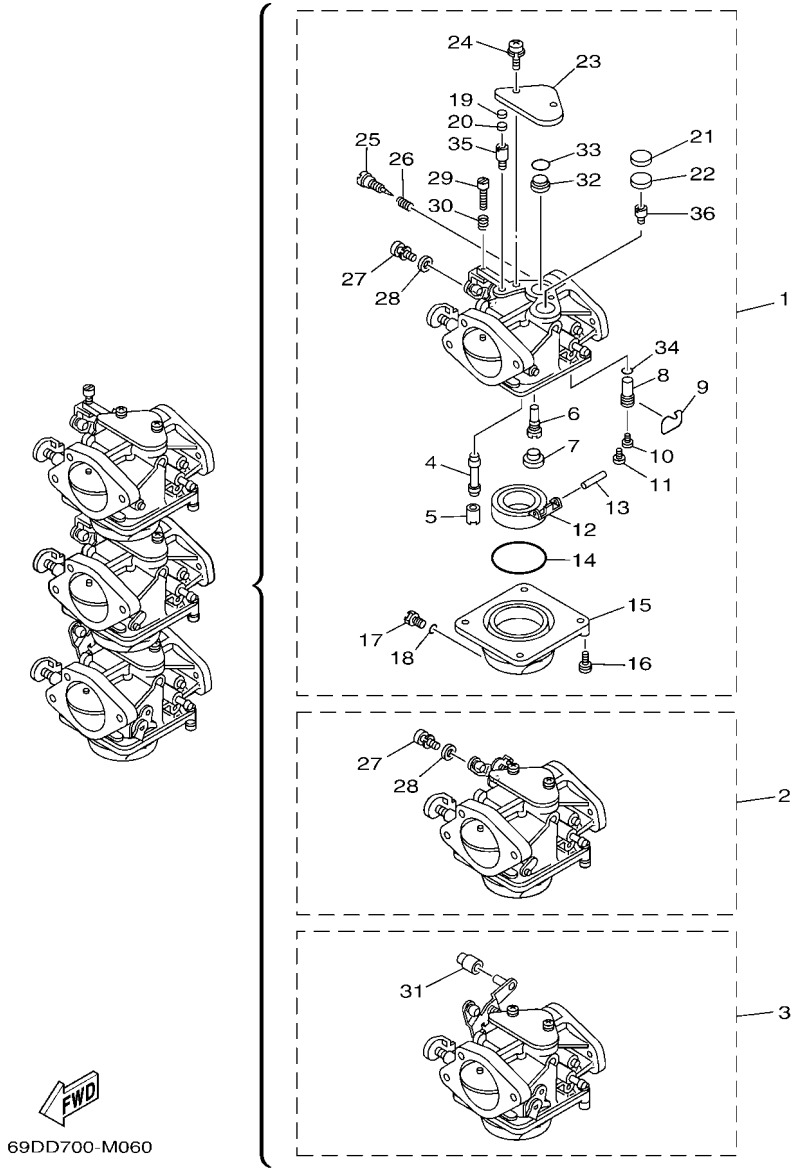

FIG. 6 CARBURETOR — CARBURATEUR

REF. NO.	PART NO. N° PIECES	DESCRIPTION DESCRIPTION	69G9					REMARKS REMARQUES
1	6K5–14301–12	CARBURETOR ASSY 1 CARBURATEUR COMPLET 1	1					
2	6K5–14302–12	CARBURETOR ASSY 2 CARBURATEUR COMPLET 2	1					
3	6K5–14303–12	CARBURETOR ASSY 3 CARBURATEUR COMPLET 3	1					
4	6H2–14947–02	.NOZZLE, MAIN .PUITS D'AIGUILLE	3					
5	676–14943–34	.JET, MAIN (#135) .GICLEUR, PRINCIPAL (#135)	3					
6	6H4–14948–15	.JET, SLOW (#70) .GICLEUR (#70)	3					
7	679–14966–00	.RUBBER CAP .CAPUCHON	3					
8	6H3–14590–02	.NEEDLE VALVE ASSY .POINTEAU	3					
9	633–14159–00	.CLIP .JONC	3					
10	676–14186–00	.PIN, FLOAT .AXE, FLOTTEUR	3					
11	98580–04008	.SCREW, PAN HEAD .VIS	3					
12	6G1–14985–00	.FLOAT .FLOTTEUR	3					
13	688–14548–00	.PIN, FLOAT ARM .AXE, BRAS DE FLOTTEUR	3					
14	6G1–14984–00	.O-RING .JOINT TORIQUE	3					
15	6H2–14980–00	.BODY, FLOAT CHAMBER .CORPS, CUVE DE FLOTTEUR	3					
16	97980–04114	.SCREW, WITH WASHER .VIS, AVEC RONDELLE	12					
17	6H3–14992–01	.SCREW, DRAIN .BOUCHON, PURGE	3					
18	93210–04230	.O-RING .JOINT TORIQUE	3					
19	663–14126–00	.GASKET .JOINT	3					
20	663–14527–00	.PLATE .PLAQUE	3					
21	688–14126–00	.GASKET .JOINT	3					
22	688–14527–00	.PLATE .PLAQUE	3					
23	6H2–14527–01	.PLATE .PLAQUE	3					
24	97980–05310	.SCREW, WITH WASHER .VIS, AVEC RONDELLE	6					
25	692–14923–00	.SCREW, PILOT .VIS, RALENTI	3					
26	697–14555–00	.SPRING .RESSORT	3					
27	6K5–14592–00	.SCREW .VIS	2					#1,2 #1,2

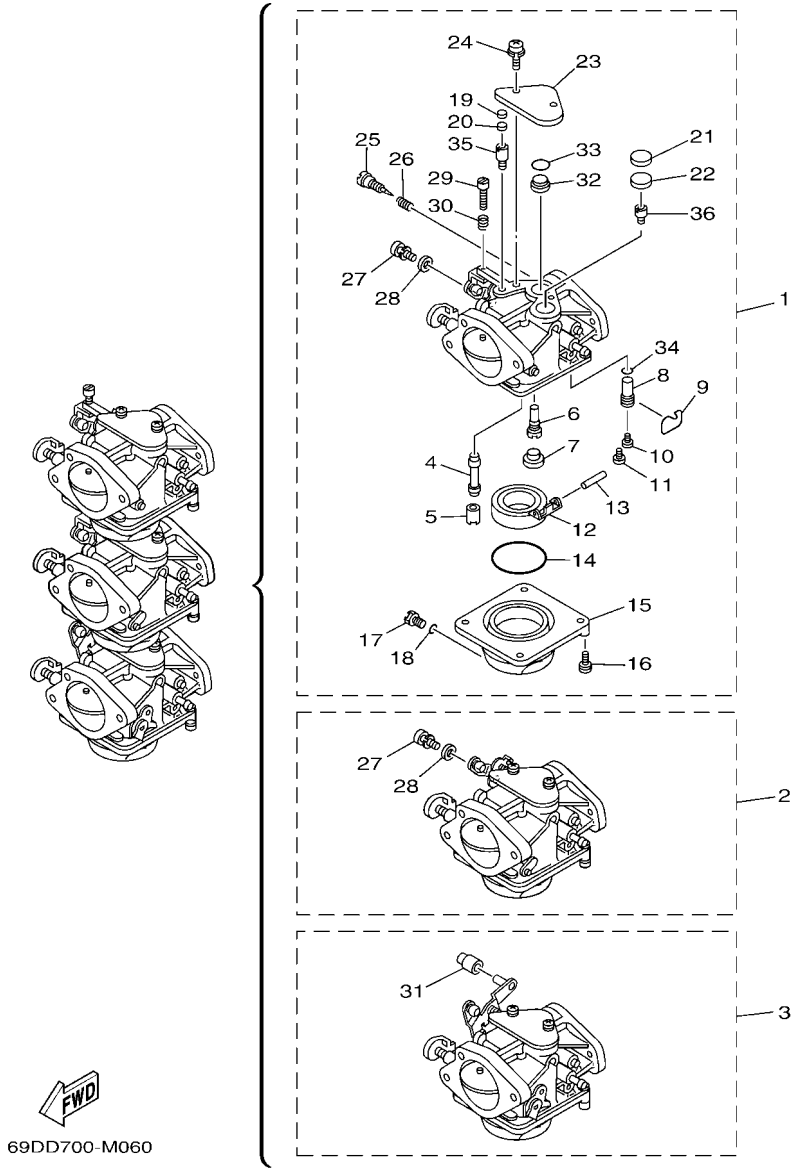

FIG. 6 CARBURETOR — CARBURATEUR

REF. NO.	PART NO. N° PIECES	DESCRIPTION DESCRIPTION	69DS					REMARKS REMARQUES
28	90201–05552	.WASHER, PLATE .RONDELLE, PLATE	2					#1,2 #1,2
29	63V–14523–00	.SCREW, STOP .VIS, BUTEE	1					#1 #1
30	90501–10326	.SPRING, COMPRESSION .RESSORT, COMPRESSION	1					#1 #1
31	6H2–14578–00	.COLLAR .COLLERETTE	1					#3 #3
32	6H3–14578–00	.PLATE .PLAQUE	3					
33	93210–15M52	.O-RING .JOINT TORIQUE	3					
34	93210–04228	.O-RING .JOINT TORIQUE	3					
35	6K5–14945–36	.JET, AIR MAIN (#145) .GICLEUR (#145)	3					
36	6K5–14950–21	.JET, AIR SLOW (#85) .GICLEUR (#85)	3					

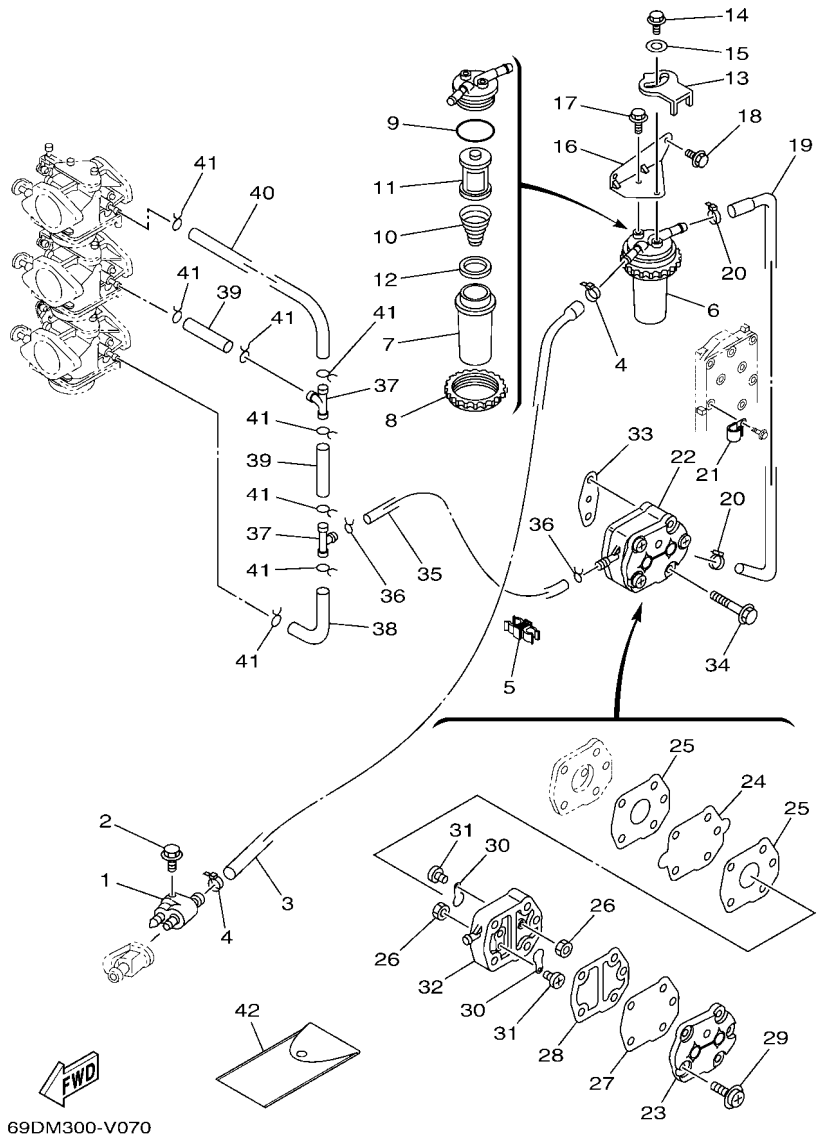

FIG. 7 FUEL — CARBURANT

REF. NO.	PART NO. N° PIECES	DESCRIPTION DESCRIPTION	69G9					REMARKS REMARQUES
1	6G1–24304–10	FUEL PIPE JOINT COMP. 1 DURITE RACCORDEMT. A ESSENCE	1					
2	97E95–06525	BOLT, HEXAGON W/W DEEP RECESS VIS HEXAGONAL AVC RONDELLE	1					
3	69D–24311–00	PIPE, FUEL 1 DURITE A ESSENCE	1					
4	90465–11M10	CLAMP BRIDE	2					
5	90464–10M59	CLAMP BRIDE	1					
6	61A–24560–05	FILTER ASSY ENS FILTRE	1					
7	61A–24521–00	.CUP, FILTER .CUVETTE, FILTRE	1					
8	65L–24531–01	.NUT .ECROU	1					
9	61A–24564–01	.O-RING .JOINT TORIQUE	1					
10	61A–24577–01	.SPRING .RESSORT	1					
11	61A–24563–02	.ELEMENT, FILTER .ELEMENT, FILTRE	1					
12	61A–24469–00	.FLOAT, WATER LEVEL .FLOTTEUR	1					
13	60H–24558–00	HOLDER, FILTER SUPPORT, FILTRE	1					
14	97E95–06416	BOLT, HEXAGON W/W DEEP RECESS VIS HEXAGONAL AVC RONDELLE	1					
15	90201–06068	WASHER, PLATE RONDELLE, PLATE	1					
16	69D–24566–01	BRACKET, FILTER SUPPORT, FILTRE	1					
17	97E95–06514	BOLT, HEXAGON W/W DEEP RECESS VIS HEXAGONAL AVC RONDELLE	1					
18	97E95–06516	BOLT, HEXAGON W/W DEEP RECESS VIS HEXAGONAL AVC RONDELLE	2					
19	69D–24312–00	PIPE 2 DURITE 2	1					
20	90465–11M10	CLAMP BRIDE	2					
21	90465–08M83	CLAMP BRIDE	1					
22	692–24410–01	FUEL PUMP ASSY POMPE A ESSENCE	1					
23	6A0–24413–00	.BODY 2 .CORPS 2	1					
24	692–24411–00	.DIAPHRAGM .DIAPHRAGME	1					
25	648–24434–01	.GASKET, BODY .JOINT, CORPS	2					
26	95380–03600	.NUT .ECROU	2					
27	663–24411–00	.DIAPHRAGM .DIAPHRAGME	1					

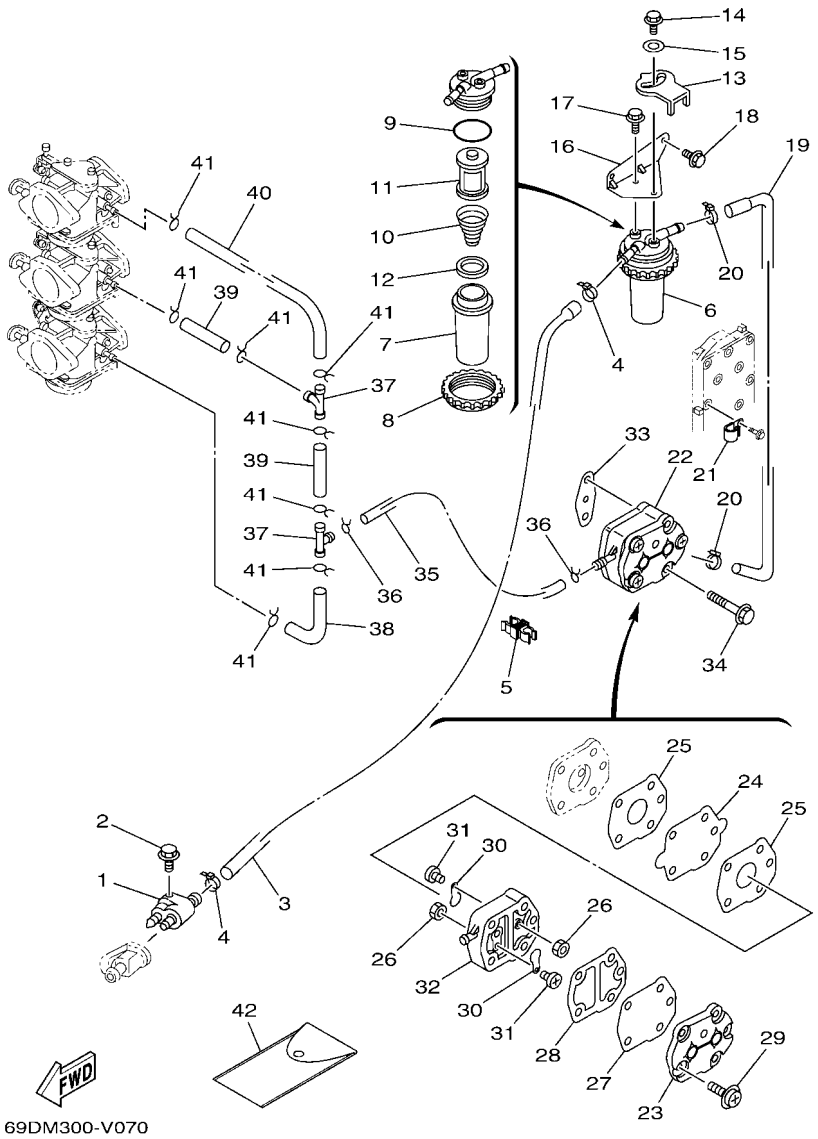

FIG. 7 FUEL — CARBURANT

REF. NO.	PART NO. N° PIECES	DESCRIPTION DESCRIPTION	69DS					REMARKS REMARQUES
28	648–24435–03	.GASKET, BODY 2 .JOINT, CORPS 2	1					
29	97980–05128	.SCREW, WITH WASHER .VIS, AVEC RONDELLE	3					
30	6A0–24421–01	.VALVE, CHECK .SOUPAPE, RETENUE	2					
31	6A0–14325–00	.SCREW, PAN HEAD .VIS TETE CONIQUE	2					
32	6A0–24412–02	.BODY 1 .CORPS 1	1					
33	650–24431–A0	GASKET, FUEL PUMP 1 JOINT 1 DE POMPE A ESSENCE	1					
34	97E95–06540	BOLT, HEXAGON W/W DEEP RECESS VIS HEXAGONAL AVC RONDELLE	2					
35	90445–09072	HOSE (L120) DURITE (L120)	1					
36	90467–08004	CLIP JONC	2					
37	688–24378–00	PIPE, JOINT 3 DURITE RACCORDEMENT 3	2					
38	6H3–24313–00	PIPE 3 DURITE 3	1					
39	90445–09220	HOSE (L30) DURITE (L30)	2					
40	6H3–24314–00	PIPE 4 DURITE 4	1					
41	90467–08004	CLIP JONC	8					
42	656–W2810–03	TOOL KIT TROUSSE A OUTILS	1					AP AP

FIG. 8 STARTER DEMARREUR

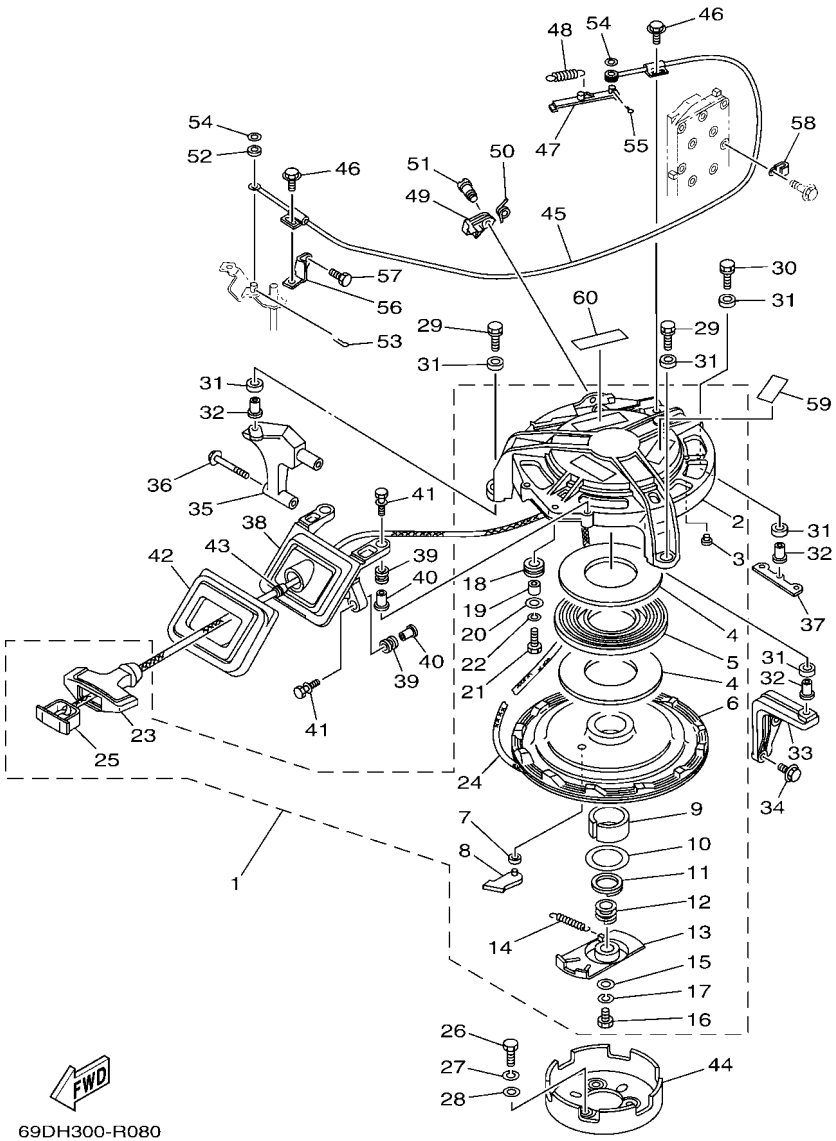

*1:CUT FROM 50M ROLLS,PART NO.90890-44374,CUTTING LENGTH 2.2M

*1:A PRELEVER SUR BOBINE 50M ,REFERENCE 90890-44374, LONGUEUR DE COUPE 2.2M

REF. NO.	PART NO. N° PIECES	DESCRIPTION DESCRIPTION	SGD9					REMARKS REMARQUES
1	692–W1571–04	STARTER ASSY DEMARREUR COMPLET	1					
2	692–15711–01	.CASE, STARTER .CARTER DE DEMARREUR	1					
3	648–15773–00	.STAY 3 .SUPPORT 3	5					
4	663–15739–00	.WASHER, THRUST .RONDELLE, DE BUTEE	2					
5	663–15713–00	.SPRING, STARTER .RESSORT DE DEMARREUR	1					
6	663–15714–02	.DRUM, SHEAVE .TAMBOUR, POULIE	1					
7	663–15764–00	.COLLAR 1 .COLLERETTE 1	1					
8	663–15741–02	.PAWL, DRIVE .CLIQUET, ENTRAINEMENT	1					
9	663–15754–00	.BUSH 2 .BAGUE 2	1					
10	663–15726–01	.WASHER, FLAT .RONDELLE, PLATE	1					
11	663–15744–00	.CIRCLIP .CIRCLIP	1					
12	663–15715–00	.SPRING, FRICTION .RESSORT, PLAQUE D'ENTRAINEMT	1					
13	696–15716–00	.PLATE, DRIVE .PLAQUE, ENTRAINEMENT	1					
14	696–15734–00	.SPRING, RETURN .RESSORT, RAPPEL	1					
15	663–15719–00	.WASHER, THRUST .RONDELLE, DE BUTEE	1					
16	97095–06016	.BOLT .BOULON	1					
17	92995–06100	.WASHER, SPRING .RONDELLE, GROWER	1					
18	663–15752–00	.ROLLER, WIRE .GALET, CABLE	1					
19	6F5–15753–00	.BUSH .CHARBON	1					
20	6F5–15791–00	.WASHER, LOCK .RONDELLE-FREIN	1					
21	97017–06025	.BOLT .BOULON	1					
22	92995–06100	.WASHER, SPRING .RONDELLE, GROWER	1					
23	689–15755–02	.HANDLE, STARTER .POIGNEE, DE DEMARREUR	1					
24	*	.WIRE (L:2200MM) .FIL (L:2200MM)	1					*1 *1
25	6F5–15779–02	.COVER .COUVERCLE	1					
26	97013–08012	BOLT BOULON	3					
27	92903–08100	WASHER, SPRING RONDELLE, GROWER	3					

FIG. 8 STARTER DEMARREUR

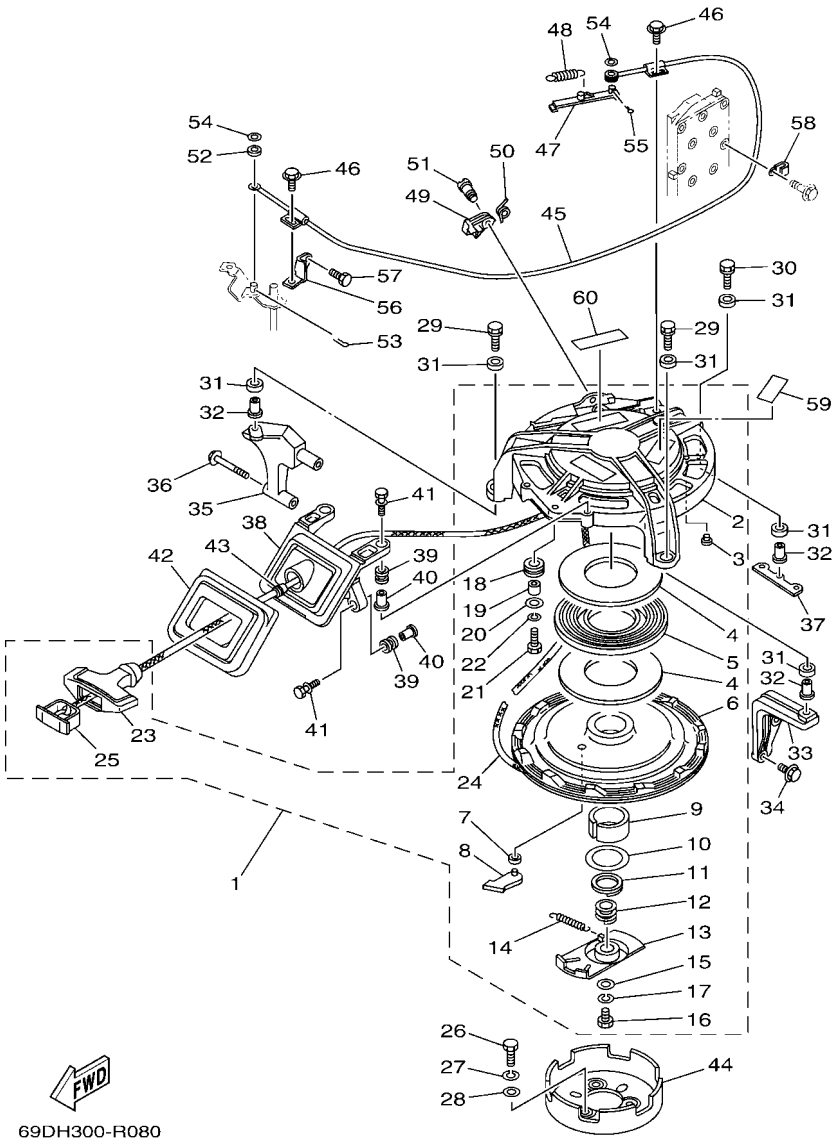

*1:CUT FROM 50M ROLLS,PART NO.90890-44374,CUTTING LENGTH 2.2M

*1:A PRELEVER SUR BOBINE 50M ,REFERENCE 90890-44374, LONGUEUR DE COUPE 2.2M

REF. NO.	PART NO. N° PIECES	DESCRIPTION DESCRIPTION	69G9					REMARKS REMARQUES
28	92903–08600	WASHER, PLATE RONDELLE, PLATE	3					
29	90119–08087	BOLT, WITH WASHER BOULON, AVEC RONDELLE	2					
30	90119–08180	BOLT, WITH WASHER BOULON, AVEC RONDELLE	1					
31	90385–12M04	BUSH DOUILLE	6					
32	90387–08M05	COLLAR COLLERETTE	3					
33	6K5–15771–00–94	STAY 1 SUPPORT 1	1					
34	97513–06525	BOLT, WITH WASHER VIS HEXAGONAL AVC RONDELLE	2					
35	6K5–15772–00–94	STAY 2 SUPPORT 2	1					
36	97513–06555	BOLT, WITH WASHER VIS HEXAGONAL AVC RONDELLE	2					
37	6K5–15773–01	STAY 3 SUPPORT 3	1					
38	6K5–15758–01–94	GUIDE, WIRE GUIDE DE FIL	1					
39	6A0–82317–01	DAMPER, IGNITION COIL AMORTISSEUR, BOBINE D'ALLUM	4					
40	90387–06119	COLLAR COLLERETTE	4					
41	90119–06290	BOLT, WITH WASHER BOULON, AVEC RONDELLE	4					
42	6K5–15762–00	SEAL, RUBBER 2 JOINT CAOUTCHOUC 2	1					
43	697–15789–01	DAMPER AMORTISSEUR	1					
44	6K5–15723–00	PULLEY, STARTER POULIE DE DEMARREUR	1					
45	6K5–15770–01	CABLE COMP., STARTER STOP CABLE, BUTEE DE DEMAR	1					
46	97E95–06512	BOLT, HEXAGON W/W DEEP RECESS VIS HEXAGONAL AVC RONDELLE	2					
47	663–15735–01	GUIDE, CAM COULISSEAU	1					
48	90506–08M23	SPRING, TENSION RESSORT, TENSION	1					
49	663–15794–00	STOPPER BUTEE	1					
50	90508–12015	SPRING, TORSION RESSORT, TORSION	1					
51	90149–05095	SCREW VIS	1					
52	663–15736–01	RING, RETAINING 1 CIRCLIP 1	1					
53	90468–18008	CLIP JONC	1					
54	92903–06200	WASHER, PLAIN RONDELLE, PLATE	2					

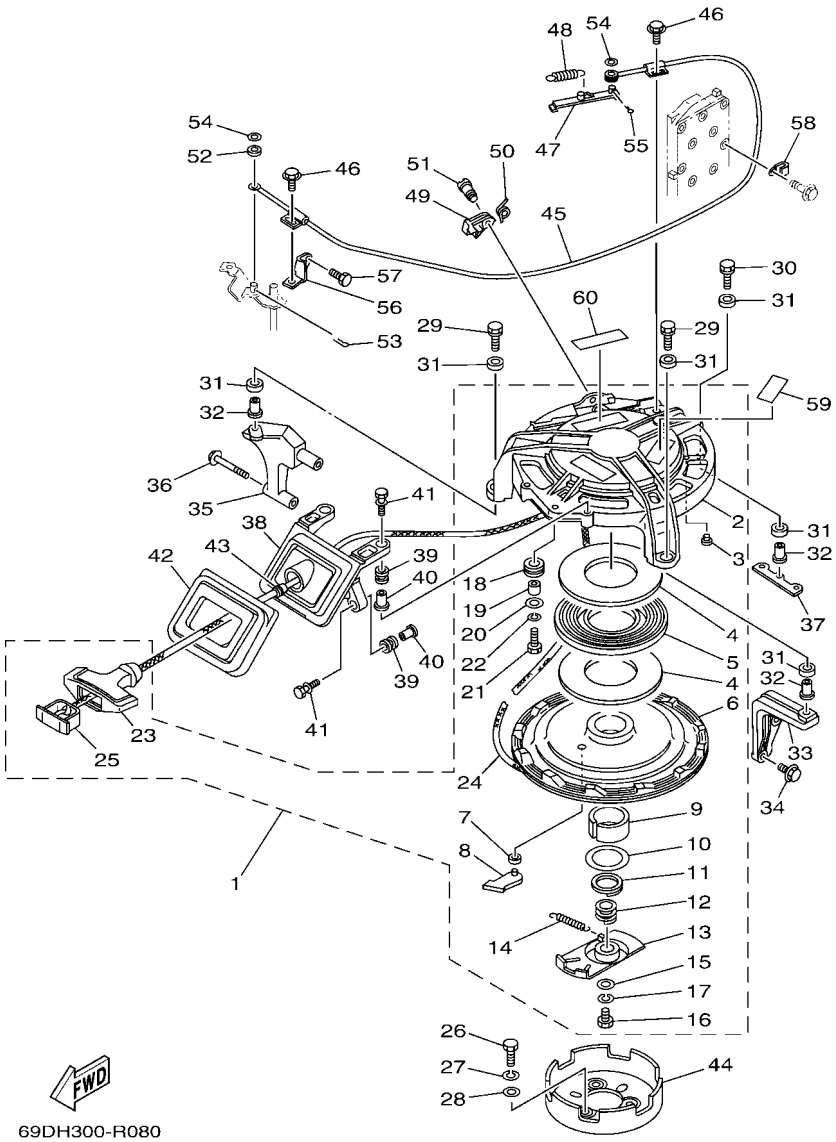

*1:CUT FROM 50M ROLLS,PART NO.90890-44374,CUTTING LENGTH 2.2M

*1:A PRELEVER SUR BOBINE 50M ,REFERENCE 90890-44374,
LONGUEUR DE COUPE 2.2M

FIG. 8 STARTER DEMARREUR

REF. NO.	PART NO. N° PIECES	DESCRIPTION DESCRIPTION	SG69					REMARKS REMARQUES
55	91490–16012	PIN. COTTER GOUPILLE	1					
56	6K5–15774–00	STAY 4 SUPPORT 4	1					
57	97013–06012	BOLT BOULON	1					
58	90465–06M90	CLAMP BRIDE	1					
59	6EE–81995–40	LABEL, WARNING ETIQUETTE, AVERTISSEMENT	1					
60	6EE–81995–50	LABEL, WARNING ETIQUETTE, AVERTISSEMENT	1					

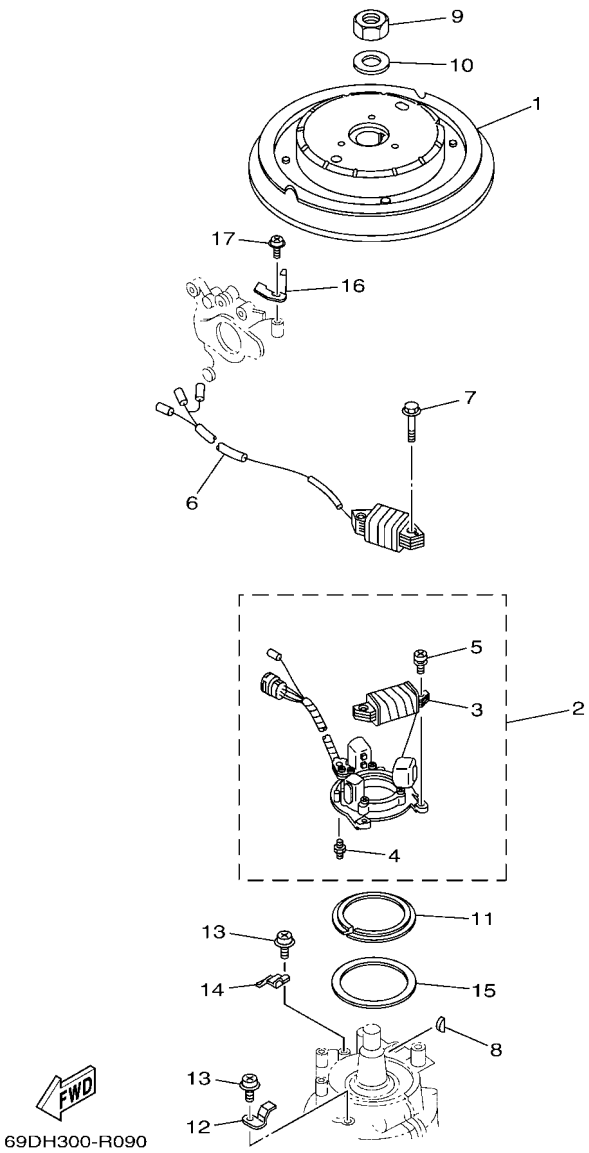

FIG. 9 GENERATOR GENERATRICE

REF. NO.	PART NO. N° PIECES	DESCRIPTION DESCRIPTION	69G					REMARKS REMARQUES
1	6K5–85550–11	ROTOR ASSY ROTOR CPLT	1					
2	6H3–85510–A1	STATOR ASSY STATOR CPLT	1					
3	6H3–85520–00	.COIL, CHARGE .BOBINE, CHARGE	1					
4	663–85518–00	.JOINT, BALL .JOINT SPHERIQUE	1					
5	97902–05125	.SCREW, WITH WASHER .VIS, AVEC RONDELLE	2					
6	6H3–85533–A0	COIL, LIGHTING BOBINE, ECLAIRAGE	1					
7	97513–06530	BOLT, WITH WASHER VIS HEXAGONAL AVC RONDELLE	2					
8	90280–05015	KEY, WOODRUFF CLAVETTE, DEMI-LUNE	1					
9	90170–20137	NUT ECROU	1					
10	90201–21M18	WASHER, PLATE RONDELLE, PLATE	1					
11	6H4–41611–00	RETAINER, MAGNETO BASE FLASQUE, PLATEAU D'AVANCE	1					
12	6H3–41612–00	RETAINER, MAGNETO BASE FLASQUE, PLATEAU D'AVANCE	2					
13	97985–06212	SCREW, WITH WASHER VIS, AVEC RONDELLE	3					
14	6H3–41612–10	RETAINER, MAGNETO BASE FLASQUE, PLATEAU D'AVANCE	1					
15	6K5–41618–01	WASHER, MAGNETO RONDELLE, MAGNETO	1					
16	6K5–81332–60	PLATE, TIMING PLATEAU, ALLUMAGE	1					
17	97985–06210	SCREW, WITH WASHER VIS, AVEC RONDELLE	1					

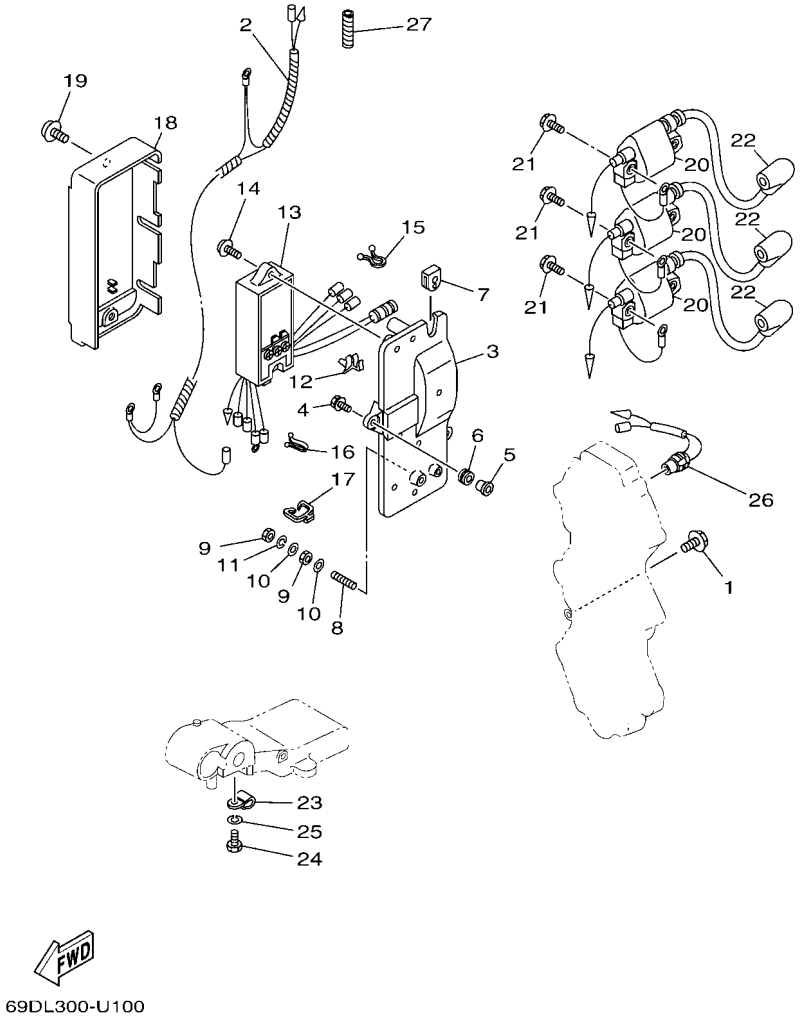

FIG. 10 ELECTRICAL — ELECTRIQUE

REF. NO.	PART NO. N° PIECES	DESCRIPTION DESCRIPTION	69DS					REMARKS REMARQUES
1	97513–06512	BOLT, WITH WASHER VIS HEXAGONAL AVC RONDELLE	1					
2	69D–82531–00	WIRE, LEAD FIL	1					
3	6H3–85542–00	BRACKET SUPPORT	1					
4	90105–06M14	BOLT FLANGE BOULON, A COLLERETTE	3					
5	90387–06M43	COLLAR COLLERETTE	3					
6	90480–13M24	GROMMET PASSE-FIL	3					
7	6H3–81922–01	GROMMET OEILLET CAOUTCHOUC	1					
8	90116–06M07	BOLT, STUD GOUJON	1					
9	95380–06700	NUT ECROU	2					
10	92990–06200	WASHER, PLAIN RONDELLE, PLATE	2					
11	92990–06100	WASHER, SPRING RONDELLE, GROWER	1					
12	90464–04M12	CLAMP BRIDE	1					
13	6H3–85540–13	C.D.I. UNIT ASSY BLOC C.D.I.	1					
14	97980–06225	SCREW, WITH WASHER VIS, AVEC RONDELLE	2					
15	90464–08M07	CLAMP BRIDE	1					
16	90464–12M17	CLAMP BRIDE	1					
17	90464–07M10	CLAMP BRIDE	1					
18	6H3–81916–00	COVER, TERMINAL COUVERCLE, BORNE	1					
19	97985–06212	SCREW, WITH WASHER VIS, AVEC RONDELLE	2					
20	6H3–85570–11	IGNITION COIL ASSY BOBINE D'ALLUMAGE (ENS.)	3					
21	97513–06525	BOLT, WITH WASHER VIS HEXAGONAL AVC RONDELLE	6					
22	6G1–82370–21	PLUG CAP ASSY ANTIPARASITE	3					
23	90465–06M90	CLAMP BRIDE	1					
24	97013–06012	BOLT BOULON	1					
25	92903–06100	WASHER, SPRING RONDELLE, GROWER	1					
26	688–82560–10	THERMO SWITCH ASSY THERMO-CONTACT COMPLET	1					
27	90446–10M02	HOSE DURITE	1					

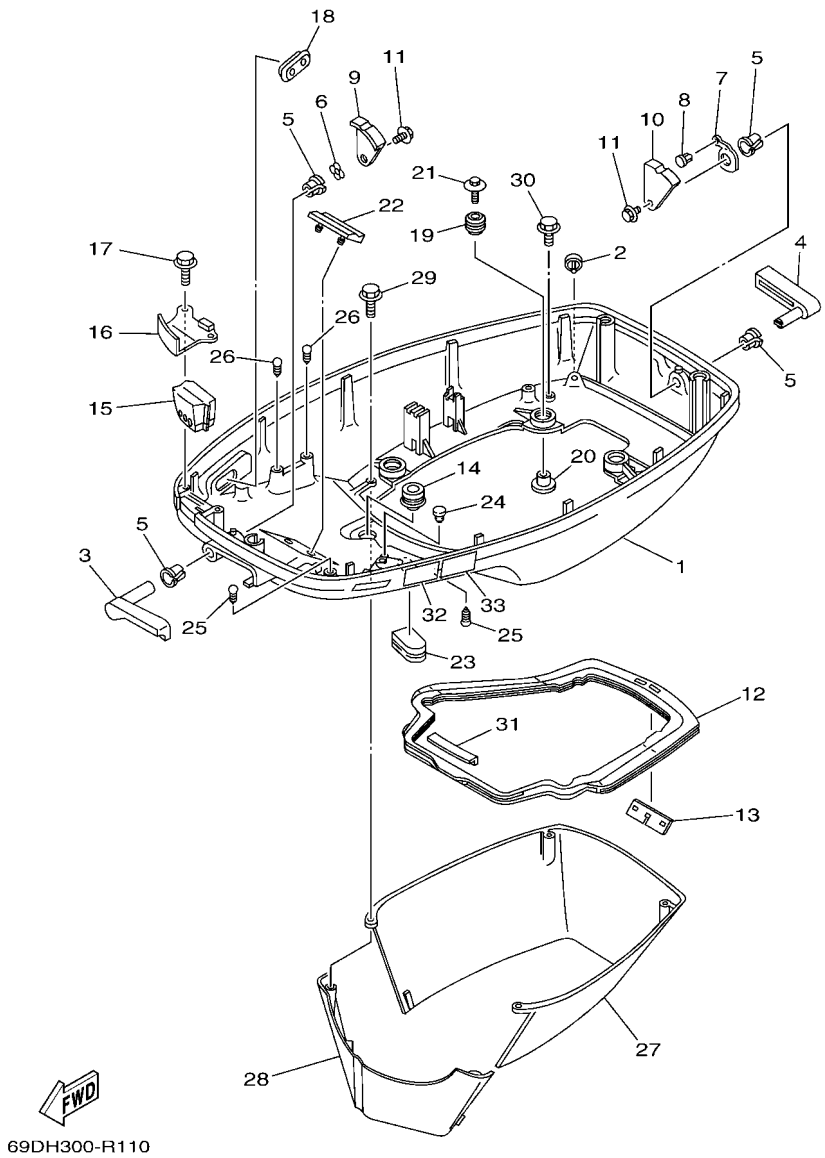

FIG. 11 BOTTOM COWLING — CAPOT INFERIEUR

REF. NO.	PART NO. N° PIECES	DESCRIPTION DESCRIPTION	69G9					REMARKS REMARQUES
1	6H3–42711–06–8D	COWLING, BOTTOM 1 CUVETTE 1	1					
2	69D–44391–00	NIPPLE, HOSE RACCORD D'ESSENCE	1					
3	6H3–42815–01–8D	LEVER, CLAMP 1 LEVIER, PRESSE 1	1					
4	6H3–42817–01–8D	LEVER, CLAMP 3 LEVIER, PRESSE 3	1					
5	90386–13M38	BUSH DOUILLE	4					
6	90206–13M10	WASHER, WAVE RONDELLE, ONDULEE	1					
7	6H3–42813–00	SPRING, CLAMP LEVER RESSORT	1					
8	90269–04M03	RIVET RIVET	1					
9	6H3–42816–00	LEVER, CLAMP 2 LEVIER, PRESSE 2	1					
10	6H3–42818–00	LEVER, CLAMP 4 LEVIER, PRESSE 4	1					
11	90119–06275	BOLT, WITH WASHER BOULON, AVEC RONDELLE	2					
12	6H3–42716–02	RUBBER SEAL 1 JOINT EN CAOUTCHOUC 1	1					
13	6K5–42717–01	RUBBER, SEAL 2 JOINT EN CAOUTCHOUC 2	1					
14	6E5–42724–01	GROMMET PASSE-FIL	1					
15	6K5–42725–01	GROMMET PASSE-FIL	1					
16	6H3–42738–01–CA	PLATE, FITTING ETRIER	1					
17	97E95–06516	BOLT, HEXAGON W/W DEEP RECESS VIS HEXAGONAL AVC RONDELLE	2					
18	6H3–42727–01	GROMMET PASSE-FIL	1					
19	6BG–42748–01	GROMMET PASSE-FIL	4					
20	90387–06M69	COLLAR COLLERETTE	4					
21	90119–06291	BOLT, WITH WASHER BOULON, AVEC RONDELLE	4					
22	6H3–42768–01	DAMPER AMORTISSEUR	1					
23	6H4–42726–01	GROMMET PASSE-FIL	1					
24	703–82119–01	COVER, LEAD WIRE GARNITURE, FIL	2					
25	90338–05M03	PLUG PLOT	2					
26	90338–05M03	PLUG PLOT	2					
27	6H3–42741–01–8D	APRON CAPOT LATERAL	1					

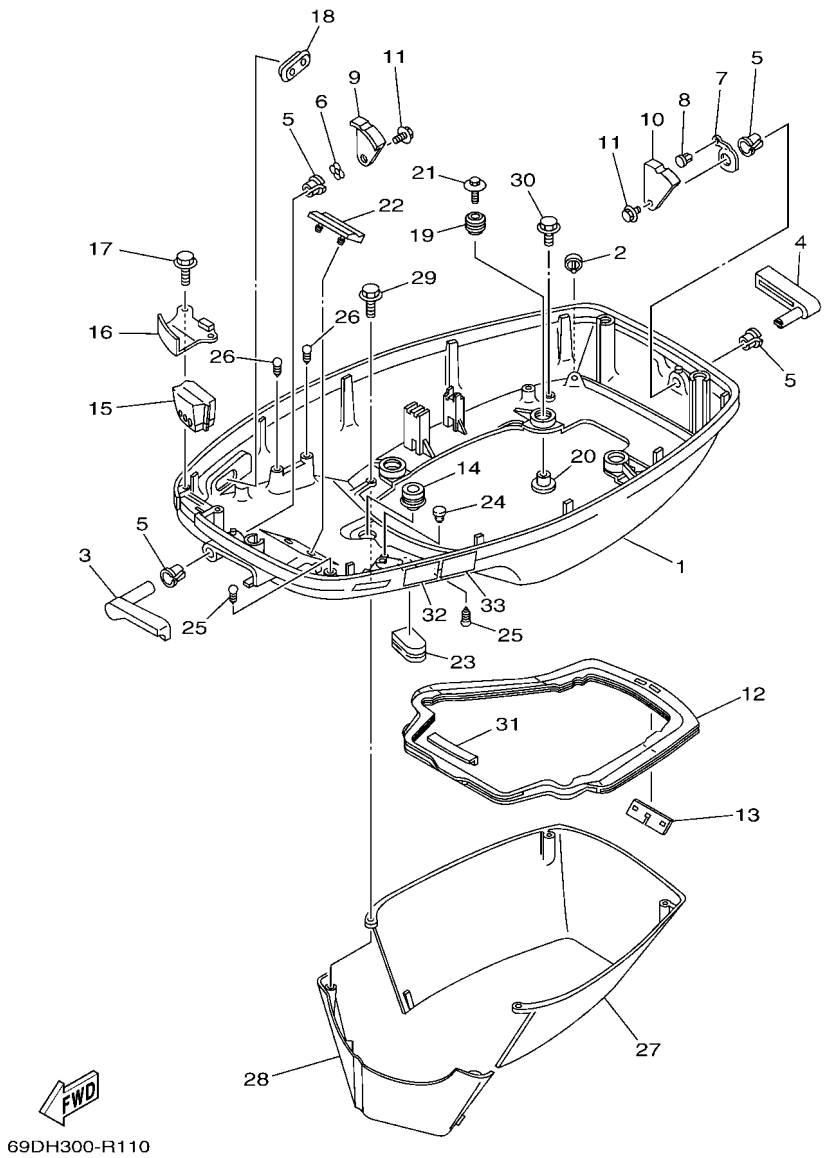

FIG. 11 BOTTOM COWLING — CAPOT INFERIEUR

REF. NO.	PART NO. N° PIECES	DESCRIPTION DESCRIPTION	69G9					REMARKS REMARQUES
28	6H3–42771–01–8D	APRON CAPOT LATERAL	1					
29	97E95–06525	BOLT, HEXAGON W/W DEEP RECESS VIS HEXAGONAL AVC RONDELLE	2					
30	97E95–06520	BOLT, HEXAGON W/W DEEP RECESS VIS HEXAGONAL AVC RONDELLE	2					
31	6H3–42718–01	RUBBER, SEAL 3 JOINT	1					
32	6EE–42794–40	LABEL, WARNING (GENERAL) ETIQUETTE, AVERTISSEMENT	1					
33	6EE–42794–50	LABEL, WARNING (GENERAL) ETIQUETTE, AVERTISSEMENT	1					

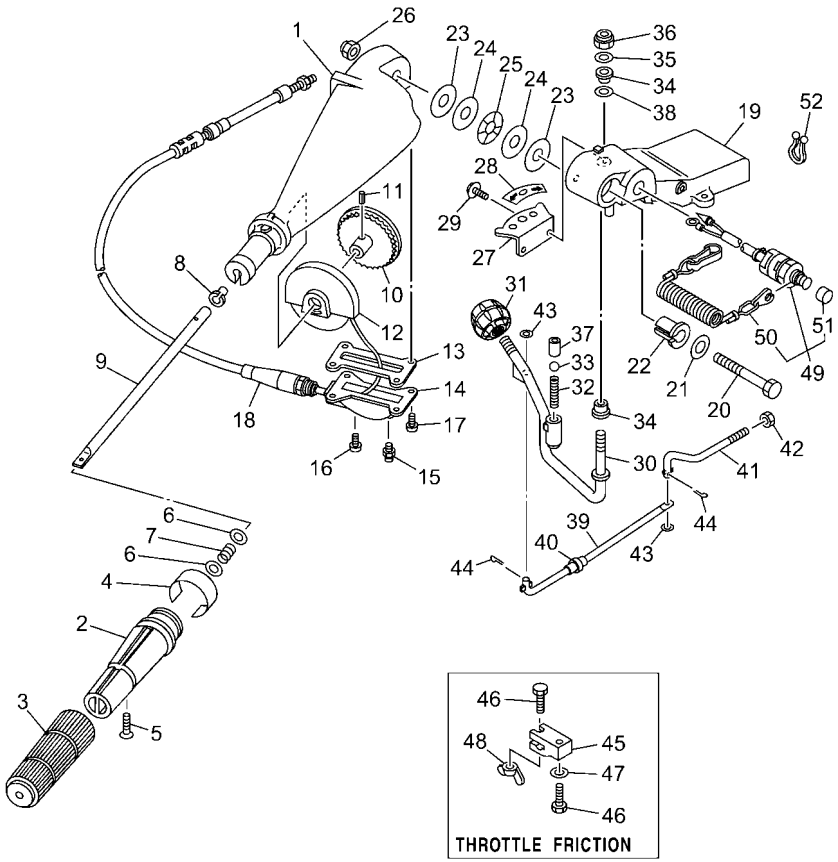

69DP300-X120

FIG. 12 STEERING — DIRECTION

REF. NO.	PART NO. N° PIECES	DESCRIPTION DESCRIPTION	69DS					REMARKS REMARQUES
1	663–42111–02–8D	HANDLE, STEERING POIGNEE	1					
2	664–42119–00	GRIP, STEERING HANDLE POIGNEE, BARRE FRANCHE	1					
3	6G1–42177–01	RUBBER, HANDLE CAOUTCHOUC, POIGNEE	1					
4	61U–42137–00	INDICATOR, THROTTLE INDICATEUR, ACCELERATION	1					
5	90152–05011	SCREW, COUNTERSUNK VIS, TETE NOYEE	1					
6	90201–10M02	WASHER, PLATE RONDELLE, PLATE	2					
7	90501–23215	SPRING, COMPRESSION RESSORT, COMPRESSION	1					
8	90386–08032	BUSH DOUILLE	1					
9	663–42115–00	SHAFT, STEERING HANDLE AXE, BARRE FRANCHE	1					
10	663–42138–00	LEVER, THROTTLE LEVIER, ACCELERATEUR	1					
11	90254–03003	PIN, SPRING RIVET, TETE TRONCONIQUE	1					
12	663–42135–01	HOUSING, THROTTLE LEVER BOITIER, CREMAILLERE	1					
13	663–42133–01	GASKET JOINT	1					
14	663–42134–03–94	COVER, THROTTLE LEVER CAPOT, CREMAILLERE	1					
15	93700–06002	NIPPLE, GREASE PION	1					
16	97885–06008	SCREW, PAN HEAD VIS, A ENCOCHE	1					
17	97885–05012	SCREW, PAN HEAD VIS, A ENCOCHE	4					
18	692–26301–03	THROTTLE CABLE ASSY CABLE D'ACCELERATEUR	1					
19	692–42121–02–8D	BRACKET SUPPORT	1					
20	90101–12075	BOLT BOULON	1					
21	92990–12200	WASHER, PLAIN RONDELLE, PLATE	1					
22	90386–12089	BUSH DOUILLE	1					
23	90202–12092	WASHER, PLATE RONDELLE, PLATE	2					
24	90201–12537	WASHER, PLATE RONDELLE, PLATE	2					
25	90206–12054	WASHER, WAVE RONDELLE, ONDULEE	1					
26	90185–12058	NUT, SELF-LOCKING ECROU,AUTO-BLOQUANT	1					
27	697–44113–00	CAM PLATE, HANDLE CAME, VERROUILLAGE	1					

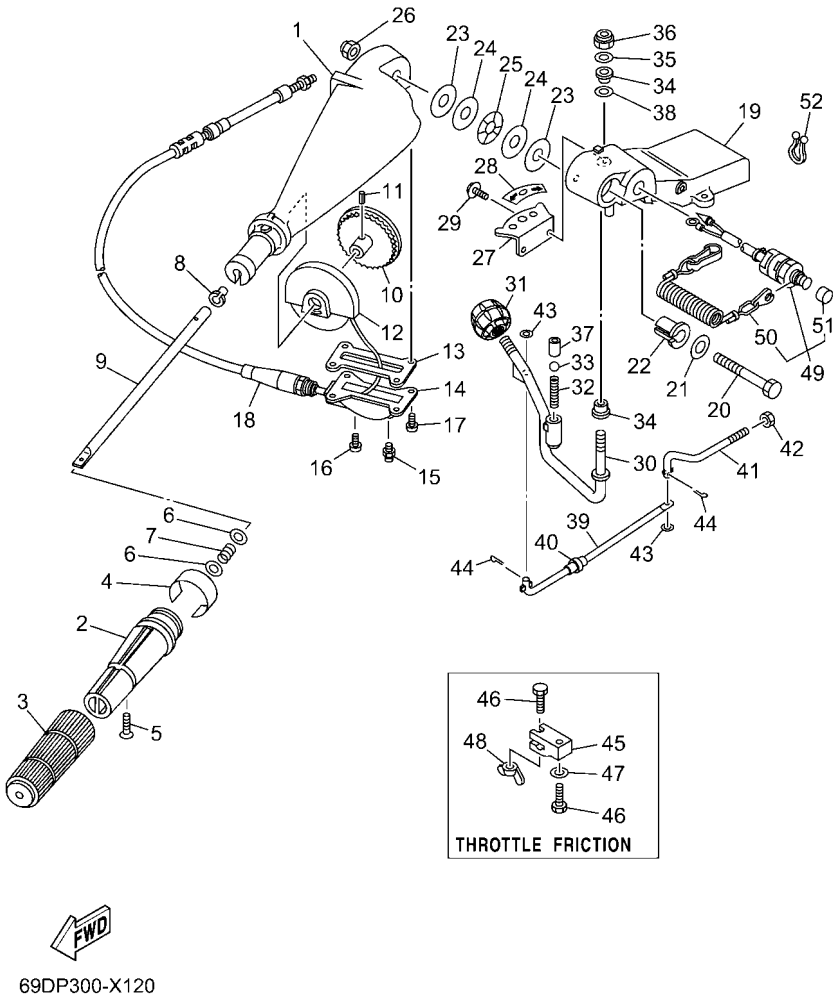

69DP300-X120

FIG. 12 STEERING — DIRECTION

REF. NO.	PART NO. N° PIECES	DESCRIPTION DESCRIPTION	69DS					REMARKS REMARQUES
28	6K5–44191–00	INDICATOR, SHIFT ETIQUETTE, EMBRAYAGE	1					
29	97513–06516	BOLT, WITH WASHER VIS HEXAGONAL AVC RONDELLE	2					
30	692–44159–01	HANDLE, GEAR SHIFT POIGNEE, LEVIER D'EMBRAYAGE	1					
31	663–44173–01	LEVER, SHIFT CONTROL POIGNEE, INVERSION	1					
32	90501–16M17	SPRING, COMPRESSION RESSORT, COMPRESSION	1					
33	93515–32M01	BALL BILLE	1					
34	90386–10009	BUSH DOUILLE	2					
35	90201–10120	WASHER, PLATE RONDELLE, PLATE	1					
36	90185–10027	NUT, SELF-LOCKING ECROU,AUTO-BLOQUANT	1					
37	90387–12M30	COLLAR COLLERETTE	1					
38	90201–12M34	WASHER, PLATE RONDELLE, PLATE	1					
39	6H3–42191–01	ROD 1 TRINGLE 2	1					
40	90386–06088	BUSH DOUILLE	1					
41	6H3–42192–00	ROD 2 TRINGLE 2	1					
42	700–48339–00	NUT, CABLE END ECROU, CABLE COMMANDE DISTANCE	1					
43	92990–06600	WASHER, PLATE RONDELLE, PLATE	2					
44	91490–25012	PIN. COTTER GOUPILLE	2					
45	663–42126–01	FRICTION, STEERING HANDLE GRIP CUVETTE, POIGNEE DE DIRECTION	1					
46	90101–06M27	BOLT BOULON	2					
47	92990–06600	WASHER, PLATE RONDELLE, PLATE	1					
48	90175–06003	NUT, WING ECROU, A OREILLES	1					
49	6K5–82575–03	ENGINE STOP SWITCH ASSY COUPE CIRCUIT CPLT	1					
50	682–82556–00	.LANYARD, STOP SWITCH .CORDON DU COUPE CIRCUIT	1					
51	689–8257Y–00	.CAP .COUVERCLE	1					
52	90464–08M07	CLAMP BRIDE	1					

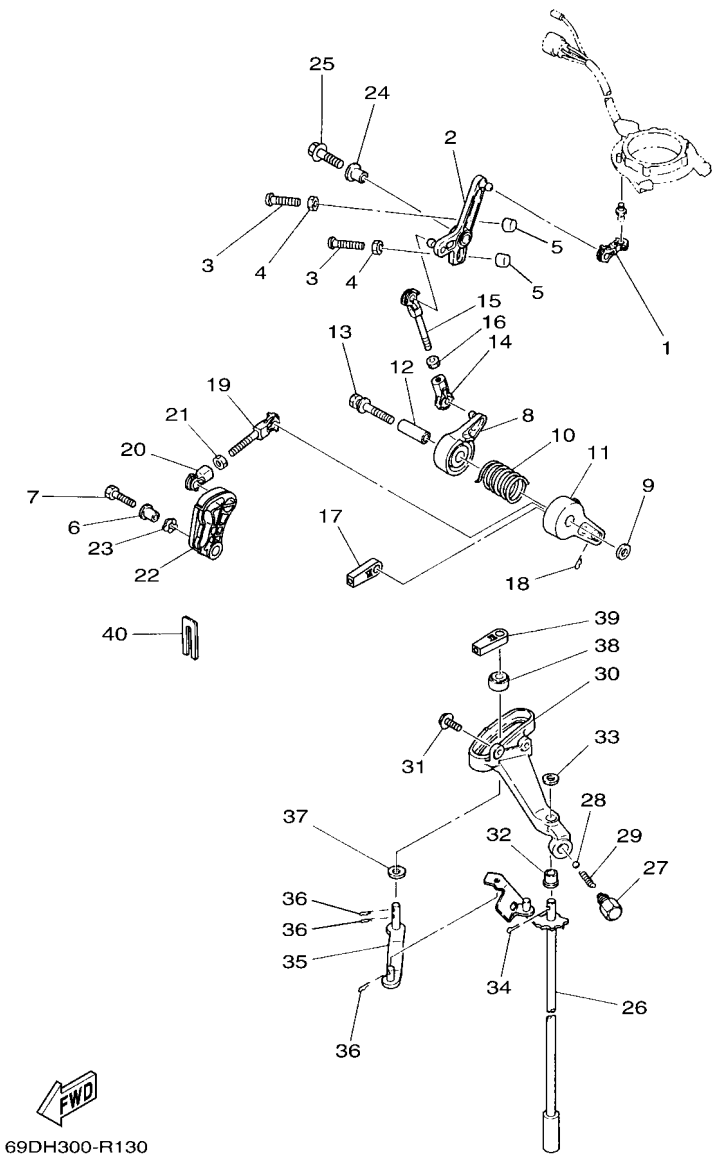

FIG. 13 CONTROL — COMMANDE

REF. NO.	PART NO. N° PIECES	DESCRIPTION DESCRIPTION	69DS					REMARKS REMARQUES
1	6H3–41238–00	JOINT, LINK RACCORD	1					
2	6H3–41631–00	LEVER, MAGNETO CONTROL LEVIER, COMMANDE D'AVANCE	1					
3	90157–06M13	SCREW, PAN HEAD VIS, TETE TRONCONIQUE	2					
4	95380–06600	NUT, HEXAGON ECROU	2					
5	688–44194–00	CAP CAPUCHON	2					
6	90387–06289	COLLAR COLLERETTE	1					
7	97D95–06025	BOLT, HEXAGON DEEP RECESS VIS HEXAGONAL	1					
8	6H3–41632–00	LEVER, MAGNETO CONTROL LEVIER, COMMANDE D'AVANCE	1					
9	90201–06M31	WASHER, PLATE RONDELLE, PLATE	1					
10	90508–29051	SPRING, TORSION RESSORT, TORSION	1					
11	6H3–41633–00	LEVER, MAGNETO CONTROL LEVIER, COMMANDE D'AVANCE	1					
12	90387–06M59	COLLAR COLLERETTE	1					
13	90119–06305	BOLT, WITH WASHER BOULON, AVEC RONDELLE	1					
14	662–41237–01	JOINT, LINK RACCORD	1					
15	679–41636–00	ROD, MAGNETO CONTROL BIELLETTE, COMMANDE D'AVANCE	1					
16	95380–05600	NUT ECROU	1					
17	6FM–48344–00	CABLE END, REMOTE CONTROL CHAPE CABLE	1					
18	90468–18008	CLIP JONC	1					
19	682–41237–50	JOINT, LINK RACCORD	1					
20	662–41237–01	JOINT, LINK RACCORD	1					
21	95380–05600	NUT ECROU	1					
22	6H3–41213–20	CAM, ACCEL. CAME, ACCELERATION	1					
23	90206–10M04	WASHER, WAVE RONDELLE, ONDULEE	1					
24	90387–06289	COLLAR COLLERETTE	1					
25	90119–06309	BOLT, WITH WASHER BOULON, AVEC RONDELLE	1					
26	6K5–44120–13	HANDLE GEAR SHIFT ASSY LEVIER D'EMBRAYAGE	1					L(22.5") L(22.5")
27	648–42715–00	BUSHING 2 COUSSINET 2	1					

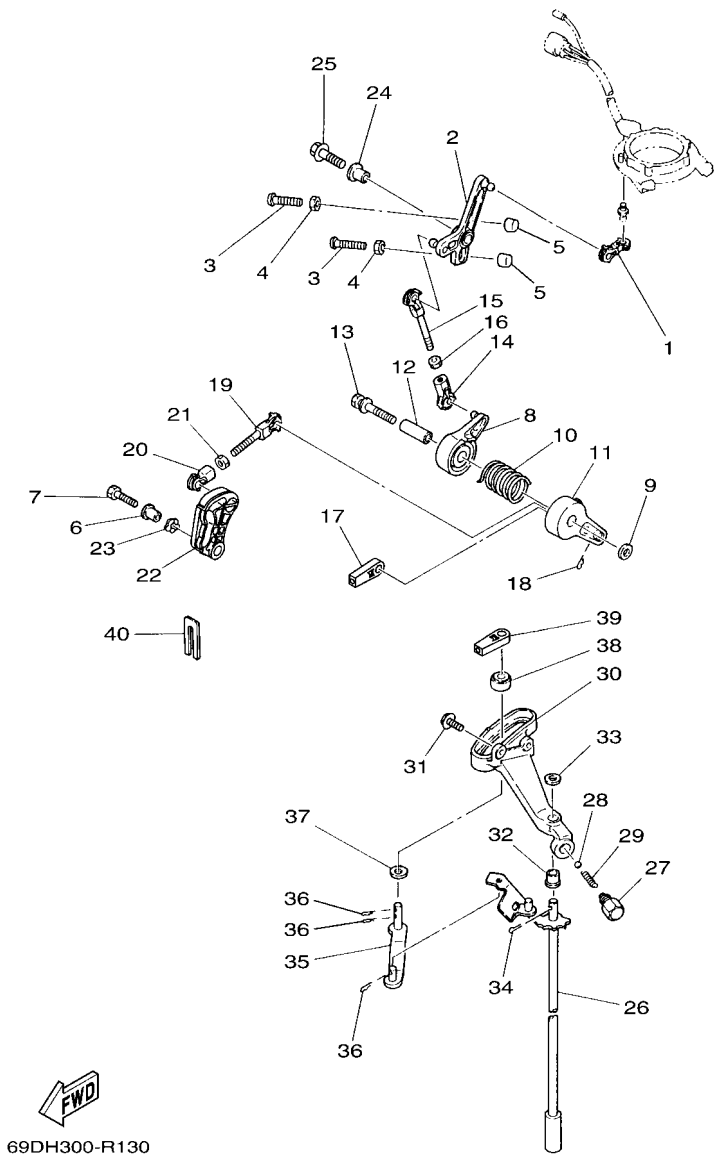

FIG. 13 CONTROL — COMMANDE

REF. NO.	PART NO. N° PIECES	DESCRIPTION DESCRIPTION	69G					REMARKS REMARQUES
28	93501–04M02	BALL BILLE	1					
29	90501–12082	SPRING, COMPRESSION RESSORT, COMPRESSION	1					
30	6H3–44117–00–94	BRACKET SUPPORT	1					
31	97513–06520	BOLT, WITH WASHER VIS HEXAGONAL AVC RONDELLE	2					
32	90386–07M58	BUSH DOUILLE	1					
33	92990–08200	WASHER, PLAIN RONDELLE, PLATE	1					
34	91490–20012	PIN. COTTER GOUPILLE	1					
35	6H3–44121–01	LEVER, SHIFT ROD LEVIER, TIGE D'INVERSION	1					
36	90468–18008	CLIP JONC	3					
37	90202–07M07	WASHER, PLATE RONDELLE, PLATE	1					
38	688–44122–00	BUSHING, SHIFT ROD LEVER DOUILLE, LEVIER D'EMBRAYAGE	1					
39	6FM–48344–00	CABLE END, REMOTE CONTROL CHAPE CABLE	1					
40	6H3–48538–00	CLAMP, CABLE 1 COLLIER	1					

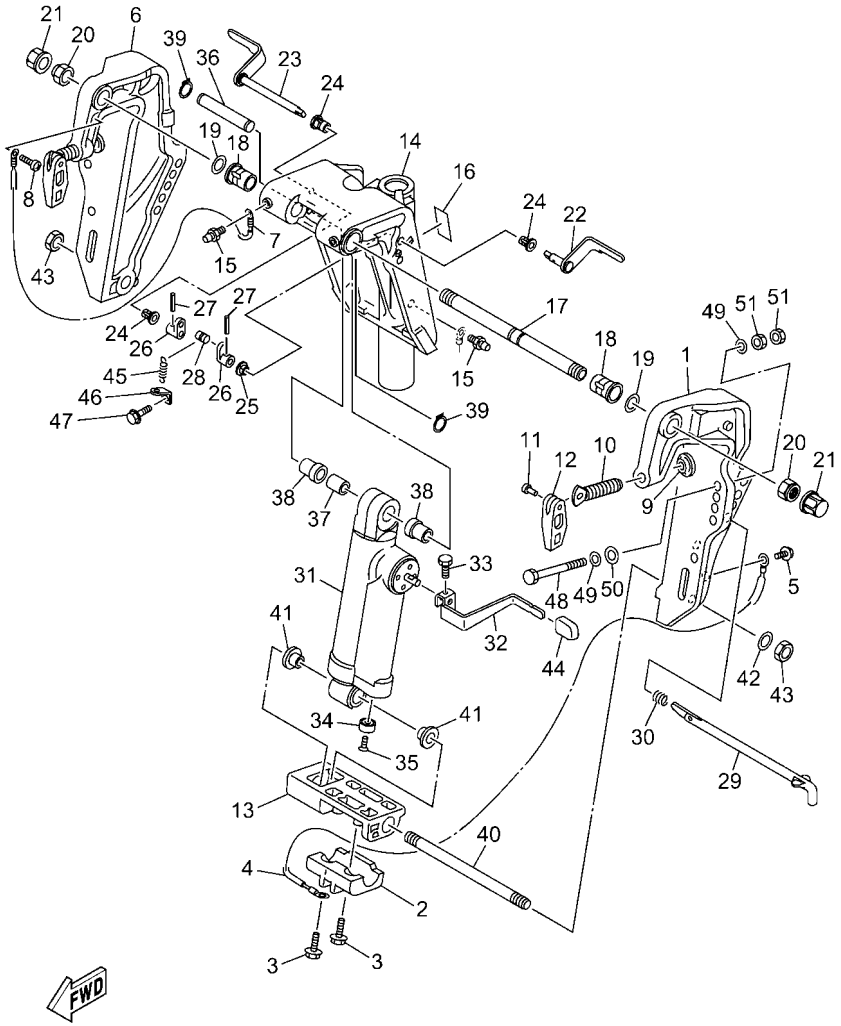

69DS300-Y140

FIG. 14 BRACKET 1 — SUPPORT 1

REF. NO.	PART NO. N° PIECES	DESCRIPTION DESCRIPTION	69DS					REMARKS REMARQUES
1	63D–43111–01–8D	BRACKET, CLAMP 1 PRESSE 1	1					
2	63D–45251–01	ANODE ANODE	1					
3	97E95–06525	BOLT, HEXAGON W/W DEEP RECESS VIS HEXAGONAL AVC RONDELLE	2					
4	6H1–82148–00	WIRE, LEAD 4 FIL 4	1					
5	97E95–06510	BOLT, HEXAGON W/W DEEP RECESS VIS HEXAGONAL AVC RONDELLE	1					
6	63D–43112–01–8D	BRACKET, CLAMP 2 PRESSE 2	1					
7	63D–82148–00	WIRE, LEAD 4 FIL 4	1					
8	97885–06008	SCREW, PAN HEAD VIS, A ENCOCHE	1					
9	648–43114–01	PAD, TRANSOM CLAMP RONDELLE D'APPUI	2					
10	663–43116–01	SCREW, TRANSOM CLAMP VIS DE PRESSE	2					
11	90243–04007	PIN GOUPILLE	2					
12	663–43118–01–8D	HANDLE, TRANSOM CLAMP POIGNEE DE VIS DE PRESSE	2					
13	63D–43128–01–8D	SPACER, CLAMP BRACKET ENTRETOISE	1					
14	69D–43311–11–8D	BRACKET, SWIVEL 1 SUPPORT, PIVOT 1	1					
15	93700–06004	NIPPLE, GREASE PION	3					
16	63D–43691–00	INDICATOR, TILT ETIQUETTE, RELEVAGE	1					
17	63D–43131–01	BOLT, CLAMP BRACKET BOULON, PRESSE	1					
18	90386–22M15	BUSH DOUILLE	2					
19	90201–22M03	WASHER, PLATE RONDELLE, PLATE	2					
20	90185–22043	NUT, SELF-LOCKING ECROU,AUTO-BLOQUANT	2					
21	6G5–43145–01	CAP, CLAMP BRACKET CAPUCHON, PRESSE	2					
22	6H5–43181–03	LEVER, TILT STOP 1 LEVIER VERROUILLAGE RELEVAGE 1	1					
23	6H5–43185–03	LEVER, TILT STOP 2 LEVIER VERROUILLAGE RELEVAGE 2	1					
24	90386–10M16	BUSH DOUILLE	3					
25	90386–10025	BUSH DOUILLE	1					
26	6G5–43148–00	COLLAR, DISTANCE ENTRETOISE	2					
27	91690–30020	PIN, SPRING AGRAFFE	2					

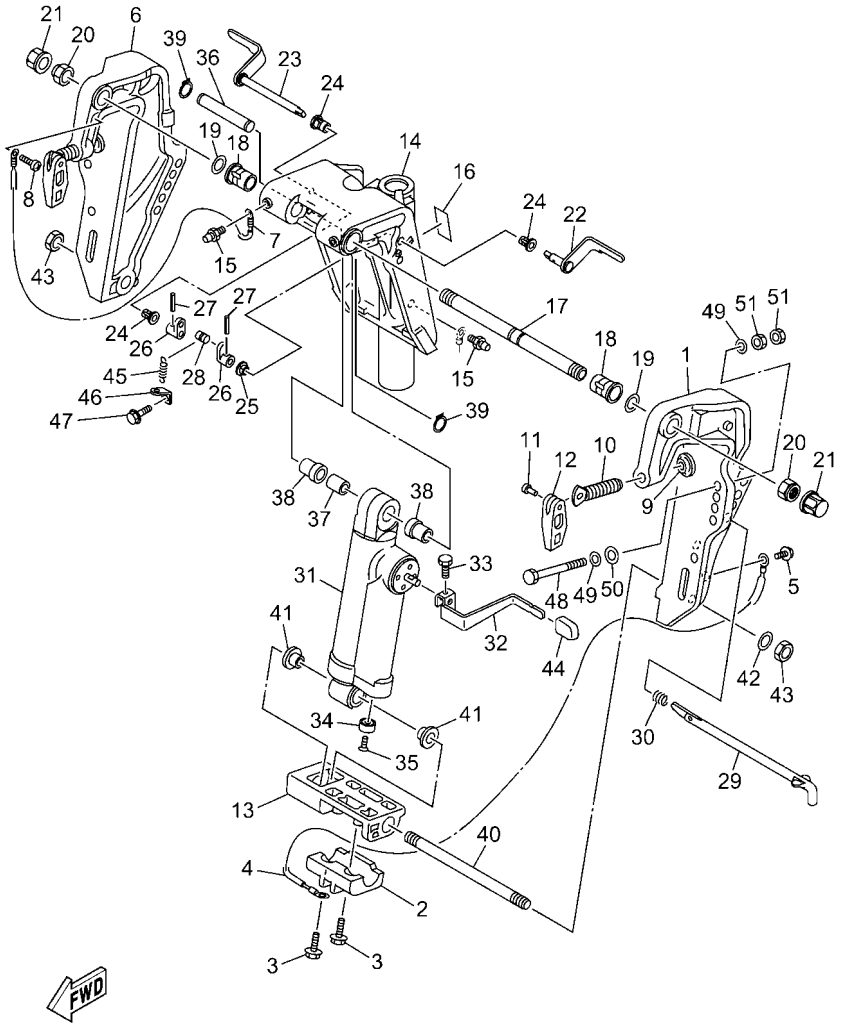

69DS300-Y140

FIG. 14 BRACKET 1 — SUPPORT 1

REF. NO.	PART NO. N° PIECES	DESCRIPTION DESCRIPTION	69DS					REMARKS REMARQUES
28	90249–06M19	PIN GOUPILLE	1					
29	688–43160–01	TILT ROD ASSY BROCHE D'INCLINAISON (ENS.)	1					
30	90502–16M02	SPRING, CONICAL RESSORT, CONIQUE	1					
31	69D–43107–12–8D	SHOCK ABSORBER SUB-ASSY AMORTISSEUR (ENS.)	1					
32	69D–43631–00	LEVER, TILT LEVIER, INCLINAISON	1					
33	97D95–06010	BOLT, HEXAGON DEEP RECESS VIS HEXAGONAL	1					
34	663–45251–00	ANODE ANODE	1					
35	90152–06M01	SCREW, COUNTERSUNK VIS, TETE NOYEE	1					
36	69D–43126–01	PIN, UPPER SHOCK MOUNT AXE, SUPERIEUR AMORTISSEUR	1					
37	90387–16003	COLLAR COLLERETTE	1					
38	90387–16004	COLLAR COLLERETTE	2					
39	93410–16097	CIRCLIP CIRCLIP	2					
40	90116–18M52	BOLT, STUD GOUJON	1					
41	90386–18M44	BUSH DOUILLE	2					
42	92995–18600	WASHER RONDELLE	1					
43	90170–18M10	NUT ECROU	2					
44	682–43318–01	COVER CAPUCHON	1					
45	90506–14M24	SPRING, TENSION RESSORT, TENSION	1					
46	6G5–43144–00	HOOK, SPRING CROCHET	1					
47	97E95–06512	BOLT, HEXAGON W/W DEEP RECESS VIS HEXAGONAL AVC RONDELLE	1					
48	90101–12063	BOLT (L:105MM) BOULON (L:105MM)	4					
49	90201–12062	WASHER, PLATE RONDELLE, PLATE	8					
50	90201–12426	WASHER, PLATE RONDELLE, PLATE	4					
51	95380–12600	NUT ECROU	8					

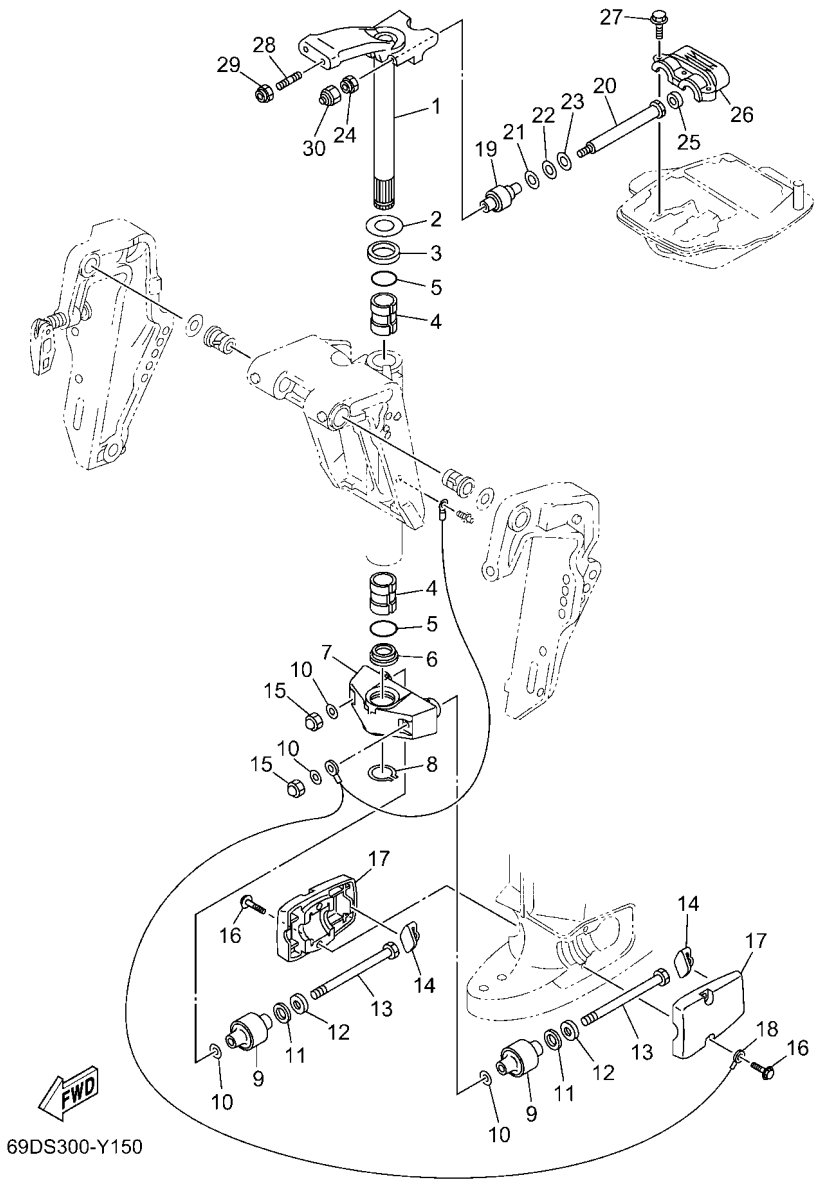

69DS300-Y150

FIG. 15 BRACKET 2 — SUPPORT 2

REF. NO.	PART NO. N° PIECES	DESCRIPTION DESCRIPTION	69DS					REMARKS REMARQUES
1	69D–42510–11–8D	STEERING BRACKET ASSY DIRECTION SUPPORT (ENS.)	1					L(22.5") L(22.5")
2	90201–30M00	WASHER, PLATE RONDELLE, PLATE	1					
3	90386–30M78	BUSH DOUILLE	1					
4	90386–30M77	BUSH DOUILLE	2					
5	93210–29M94	O-RING JOINT TORIQUE	2					
6	90386–30M60	BUSH DOUILLE	1					
7	69D–44551–11–8D	HOUSING, LOWER MOUNT RUBBER 1 BOITIER, SILENT-BLOC INFERIEUR	1					L(22.5") L(22.5")
8	93410–28M06	CIRCLIP CIRCLIP	1					
9	687–44555–00	MOUNT DAMPER, LOWER SIDE SILENT-BLOC, INFERIEUR LATERAL	2					L(22.5") L(22.5")
10	90201–12M16	WASHER, PLATE RONDELLE, PLATE	4					
11	90202–25M04	WASHER, PLATE RONDELLE, PLATE	2					
12	90201–13M19	WASHER, PLATE RONDELLE, PLATE	2					
13	90109–12M21	BOLT BOULON	2					
14	688–44575–01	DAMPER, LOWER MOUNT RUBBER SILENT-BLOC, INFERIEUR	2					
15	95380–12800	NUT, CROWN ECROU, BORGNE	2					
16	97E75–08540	BOLT, HEXAGON W/W DEEP RECESS VIS HEXAGONAL AVC RONDELLE	4					
17	6H3–44553–10–8D	COVER, LOWER MOUNT COUVERCLE, SUSPENSION INFERIEU	2					
18	69D–82127–00	WIRE, LEAD 2 FIL 2	1					L(22.5") L(22.5")
19	688–44514–00	MOUNT DAMPER, UPPER SIDE SILENT-BLOC, SUPERIEUR LATERAL	2					
20	90101–10041	BOLT BOULON	2					
21	90201–20M21	WASHER, PLATE RONDELLE, PLATE	2					
22	90202–20M06	WASHER, PLATE RONDELLE, PLATE	2					
23	90201–11M22	WASHER, PLATE RONDELLE, PLATE	2					
24	90185–10027	NUT, SELF-LOCKING ECROU,AUTO-BLOQUANT	2					
25	663–44575–01	DAMPER, LOWER MOUNT RUBBER SILENT-BLOC, INFERIEUR	2					
26	688–44511–00	COVER, UPPER MOUNT COUVERCLE, SUSPENSION SUPERIEU	1					
27	97E75–08535	BOLT, HEXAGON W/W DEEP RECESS VIS HEXAGONAL AVC RONDELLE	3					

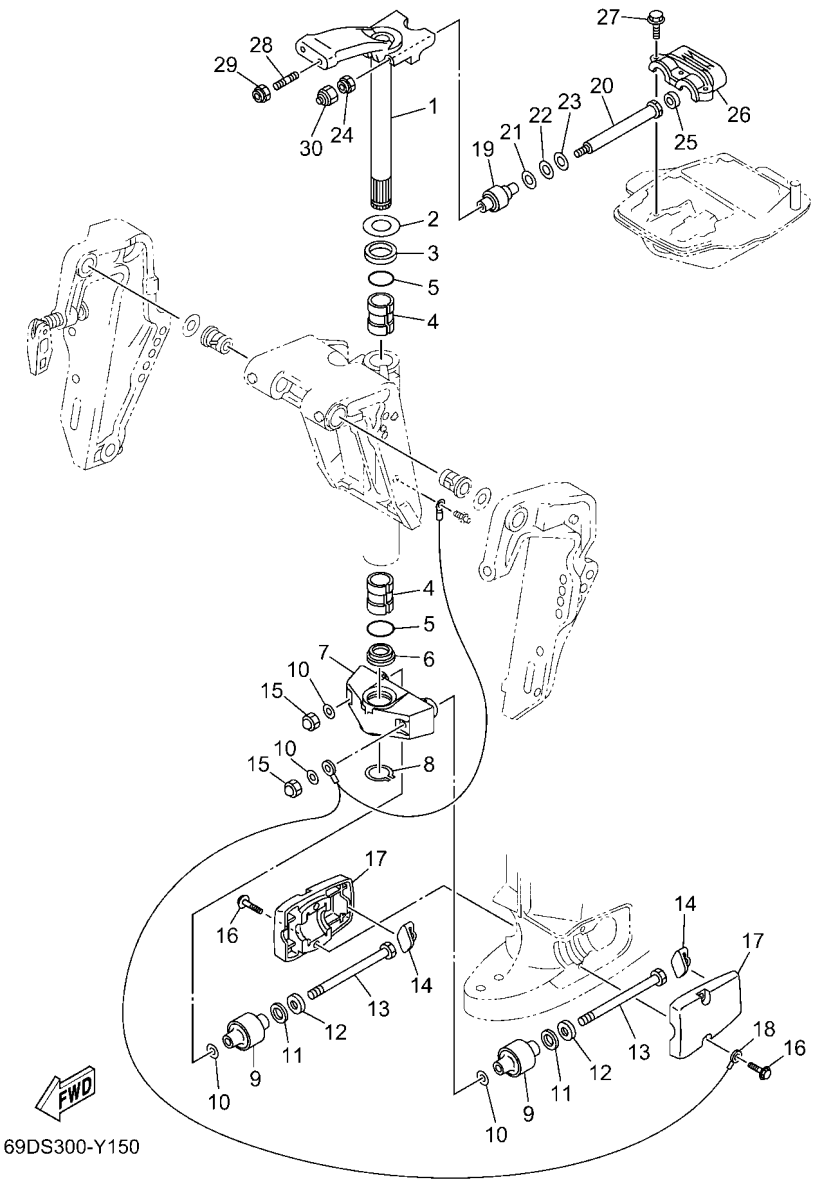

FIG. 15 BRACKET 2 — SUPPORT 2

REF. NO.	PART NO. N° PIECES	DESCRIPTION DESCRIPTION	69DS					REMARKS REMARQUES
28	90116–10063	BOLT, STUD GOUJON	2					
29	90185–10027	NUT, SELF-LOCKING ECROU,AUTO-BLOQUANT	2					
30	69D–44194–10	CAP CAPUCHON	2					

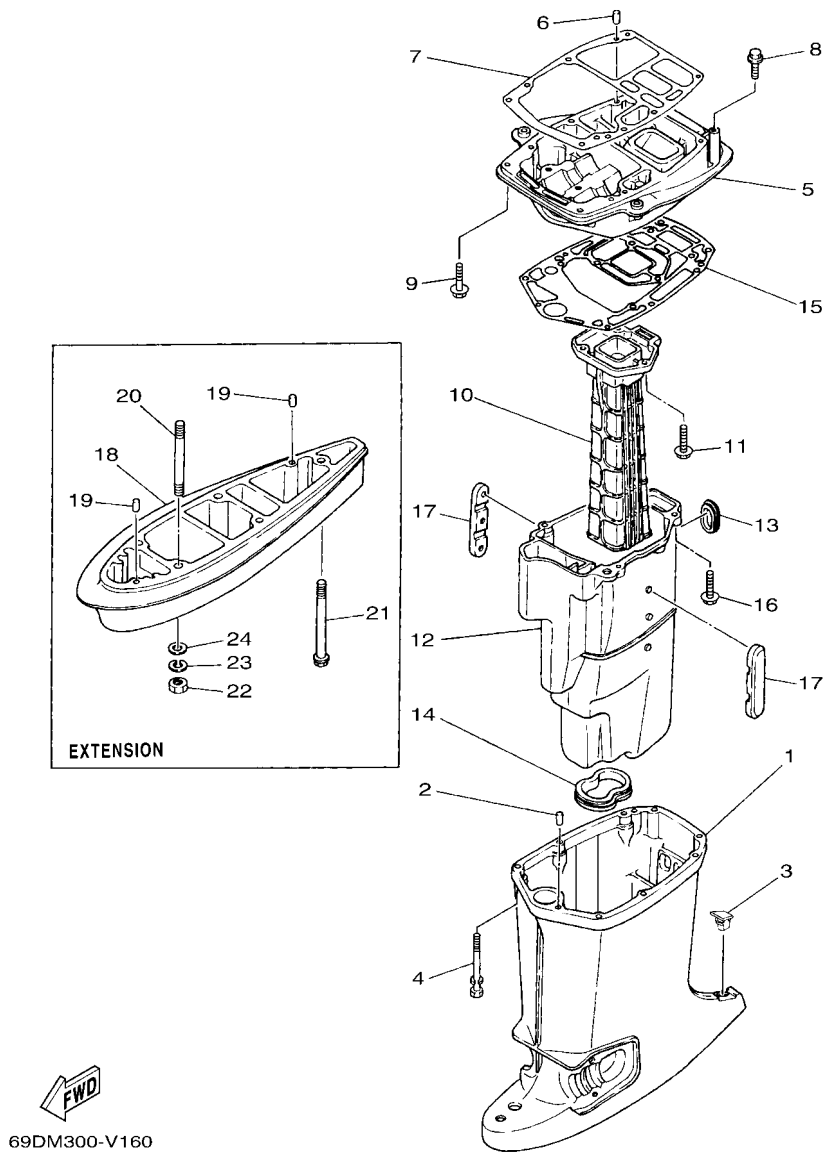

FIG. 16 UPPER CASING FOURREAU

REF. NO.	PART NO. N° PIECES	DESCRIPTION DESCRIPTION	69DS					REMARKS REMARQUES
1	6H3–45111–13–8D	CASING, UPPER FOURREAU	1					L(22.5") L(22.5")
2	93606–12019	PIN, DOWEL GOUPILLE	2					
3	6C5–45155–02	CAP CAPUCHON	1					
4	90119–08M81	BOLT, WITH WASHER BOULON, AVEC RONDELLE	6					
5	6H3–41137–01–CA	GUIDE, EXHAUST COLLECTEUR D'ECHAPPEMENT	1					
6	93606–12019	PIN, DOWEL GOUPILLE	2					
7	6H3–45113–A0	GASKET, UPPER CASING JOINT, TUBE D'ARBRE	1					
8	97E75–08530	BOLT, HEXAGON W/W DEEP RECESS VIS HEXAGONAL AVC RONDELLE	2					
9	97E75–08535	BOLT, HEXAGON W/W DEEP RECESS VIS HEXAGONAL AVC RONDELLE	2					
10	6H2–41131–01–CA	MANIFOLD, EXT. 1 PIPE D'ECHAPPEMENT	1					
11	97E75–08530	BOLT, HEXAGON W/W DEEP RECESS VIS HEXAGONAL AVC RONDELLE	3					
12	6H3–14711–11–CA	MUFFLER 1 POT D'ECHAPPEMENT 1	1					L(22.5") L(22.5")
13	6H3–45127–01	SEAL JOINT	1					
14	6H3–45123–00	GASKET, MUFFLER JOINT, POT DE DETENTE	1					
15	6H3–45114–A1	GASKET, UPPER CASING JOINT, TUBE D'ARBRE	1					
16	97E75–08530	BOLT, HEXAGON W/W DEEP RECESS VIS HEXAGONAL AVC RONDELLE	4					
17	6H3–14737–11	DAMPER, MUFFLER AMORTISSEUR DE POT D'ECHAPPT	2					L(22.5") L(22.5")
18	696–45211–01–8D	EXTENSION EXTENSION	1					
19	93606–12019	PIN, DOWEL GOUPILLE	2					
20	90116–10M31	BOLT, STUD GOUJON	4					
21	90119–08155	BOLT, WITH WASHER BOULON, AVEC RONDELLE	1					
22	95380–10600	NUT ECROU	4					
23	92990–10100	WASHER, SPRING RONDELLE, GROWER	4					
24	92995–10600	WASHER RONDELLE	4					

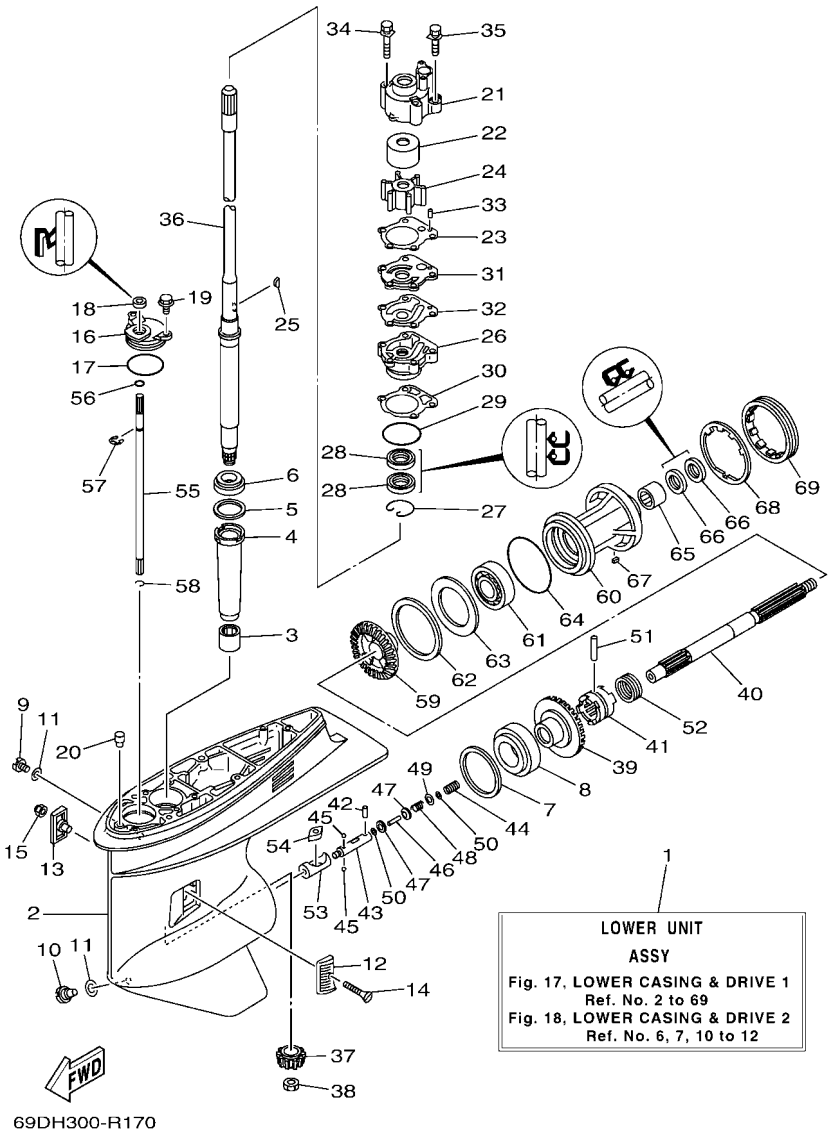

FIG. 17 LOWER CASING & DRIVE 1 — BOITIER D'HELICE TRANSMISSION1

REF. NO.	PART NO. N° PIECES	DESCRIPTION DESCRIPTION	69G9					REMARKS REMARQUES
1	69D–45300–13–8D	LOWER UNIT ASSY UNITE INFERIEURE (ENS.)	1					L(22.5") L(22.5")
2	6H1–45301–03–8D	CASING, LOWER BEQUILLE	1					
3	93315–325V1	BEARING ROULEMENT	1					
4	688–45536–01	SLEEVE, DRIVE SHAFT MANCHON, ARBRE MOTEUR	1					
5	688–45587–01	SHIM (T:0.10MM) CALE (T:0.10MM)	1					UR UR
	688–45587–10	SHIM (T:0.12MM) CALE (T:0.12MM)	1					UR UR
	688–45587–20	SHIM (T:0.15MM) CALE (T:0.15MM)	1					UR UR
	688–45587–30	SHIM (T:0.18MM) CALE (T:0.18MM)	1					UR UR
	688–45587–40	SHIM (T:0.30MM) CALE (T:0.30MM)	1					UR UR
	688–45587–50	SHIM (T:0.40MM) CALE (T:0.40MM)	1					UR UR
	688–45587–60	SHIM (T:0.50MM) CALE (T:0.50MM)	1					UR UR
6	93332–000U3	BEARING ROULEMENT	1					
7	688–45567–01	SHIM (T:0.10MM) CALE (T:0.10MM)	1					UR UR
	688–45567–10	SHIM (T:0.12MM) CALE (T:0.12MM)	1					UR UR
	688–45567–20	SHIM (T:0.15MM) CALE (T:0.15MM)	1					UR UR
	688–45567–30	SHIM (T:0.18MM) CALE (T:0.18MM)	1					UR UR
	688–45567–40	SHIM (T:0.30MM) CALE (T:0.30MM)	1					UR UR
	688–45567–50	SHIM (T:0.40MM) CALE (T:0.40MM)	1					UR UR
	688–45567–60	SHIM (T:0.50MM) CALE (T:0.50MM)	1					UR UR
8	93332–000W7	BEARING ROULEMENT	1					
9	90340–08002	PLUG, STRAIGHT SCREW PLOT, FILETE DROIT	1					
10	688–45341–10	PLUG, DRAIN BOUCHON DE VIDANGE	1					
11	90430–08003	GASKET JOINT	2					
12	6H1–45214–00	COVER, WATER INLET 1 GRILLE, ENTREE D'EAU 1	1					
13	6H1–45215–00	COVER, WATER INLET 2 GRILLE, ENTREE D'EAU 2	1					
14	90151–05M00	SCREW, COUNTERSUNK VIS, TETE NOYEE	1					
15	90185–05002	NUT, NYLON ECROU,AUTO-BLOQUANT	1					

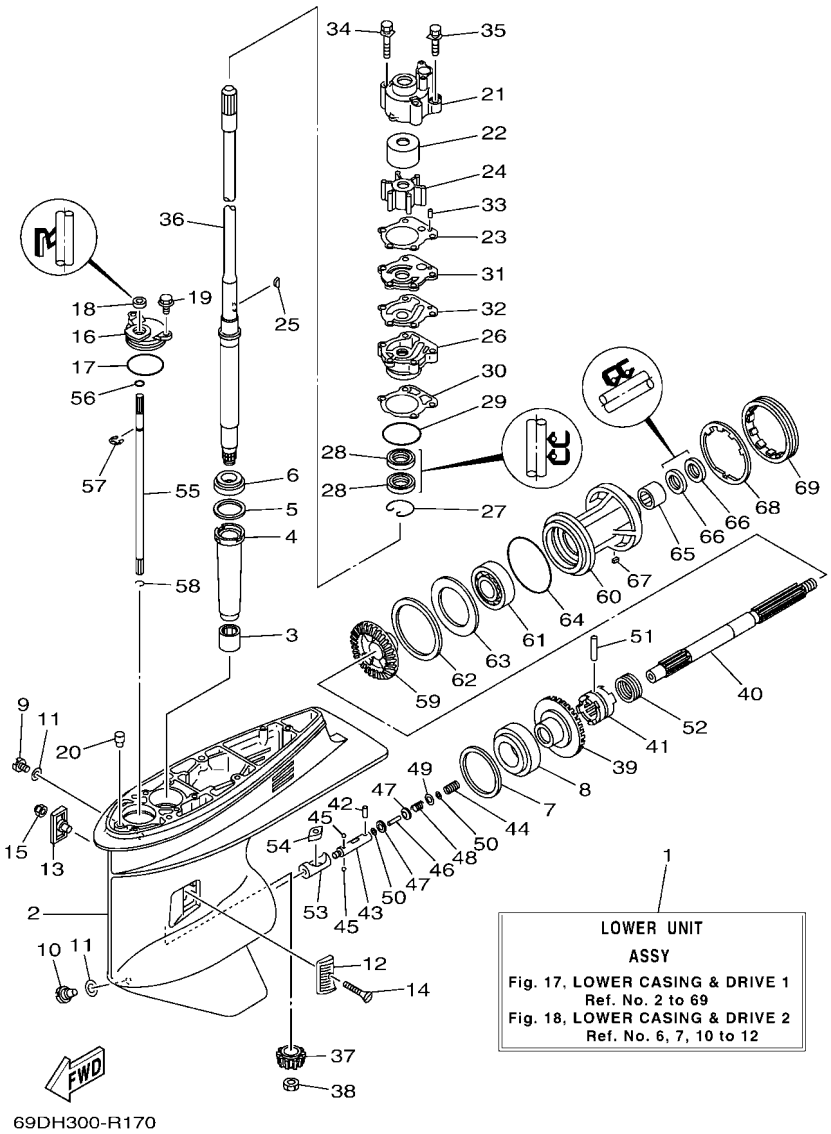

FIG. 17 LOWER CASING & DRIVE 1 — BOITIER D'HELICE TRANSMISSION1

REF. NO.	PART NO. N° PIECES	DESCRIPTION DESCRIPTION	69G9					REMARKS REMARQUES
16	688–45321–00	PLATE PLAQUETTE	1					
17	93210–49046	O-RING JOINT TORIQUE	1					
18	93106–09014	OIL SEAL JOINT SPY	1					
19	97E95–06516	BOLT, HEXAGON W/W DEEP RECESS VIS HEXAGONAL AVC RONDELLE	2					
20	6J8–45378–00	NIPPLE, HOSE (PLUG) RACCORD, TUYAU (PLOT)	1					
21	688–44311–01	HOUSING, WATER PUMP CORPS, POMPE A EAU	1					
22	69D–44322–00	INSERT, CARTRIDGE CUVETTE	1					
23	688–44315–A0	GASKET, WATER PUMP JOINT, POMPE A EAU	1					
24	688–44352–03	IMPELLER TURBINE	1					
25	90280–04M04	KEY, WOODRUFF CLAVETTE, DEMI-LUNE	1					
26	6D8–44341–01–CA	HOUSING, WATER PUMP CORPS, POMPE A EAU	1					
27	93450–44166	CIRCLIP CIRCLIP	1					
28	93101–25M03	OIL SEAL JOINT SPY	2					
29	93210–46044	O-RING JOINT TORIQUE	1					
30	688–44316–A0	GASKET, WATER PUMP JOINT, POMPE A EAU	1					
31	688–44323–40	OUTER PLATE, CARTRIDGE PLAQUE EXTERIEURE	1					
32	688–44324–A0	GASKET, CARTRIDGE JOINT	1					
33	93604–10M03	PIN, DOWEL CLAVETTE	2					
34	90119–08196	BOLT, WITH WASHER BOULON, AVEC RONDELLE	2					
35	90119–08192	BOLT, WITH WASHER BOULON, AVEC RONDELLE	2					
36	69D–45501–10	DRIVE SHAFT COMP. ARBRE MOTEUR COMP.	1					L(22.5") L(22.5")
37	6K5–45551–00	PINION (12T) PIGNON D'ATTAQUE (12D)	1					
38	90170–16M01	NUT ECROU	1					
39	6K5–45560–00	GEAR 1 (28T) PIGNON 1 (28T)	1					
40	6H1–45611–01	SHAFT, PROPELLER ARBRE, HELICE	1					
41	6H1–45631–01	CLUTCH, DOG CRABOT	1					
42	93603–12M11	PIN, DOWEL CLAVETTE	1					

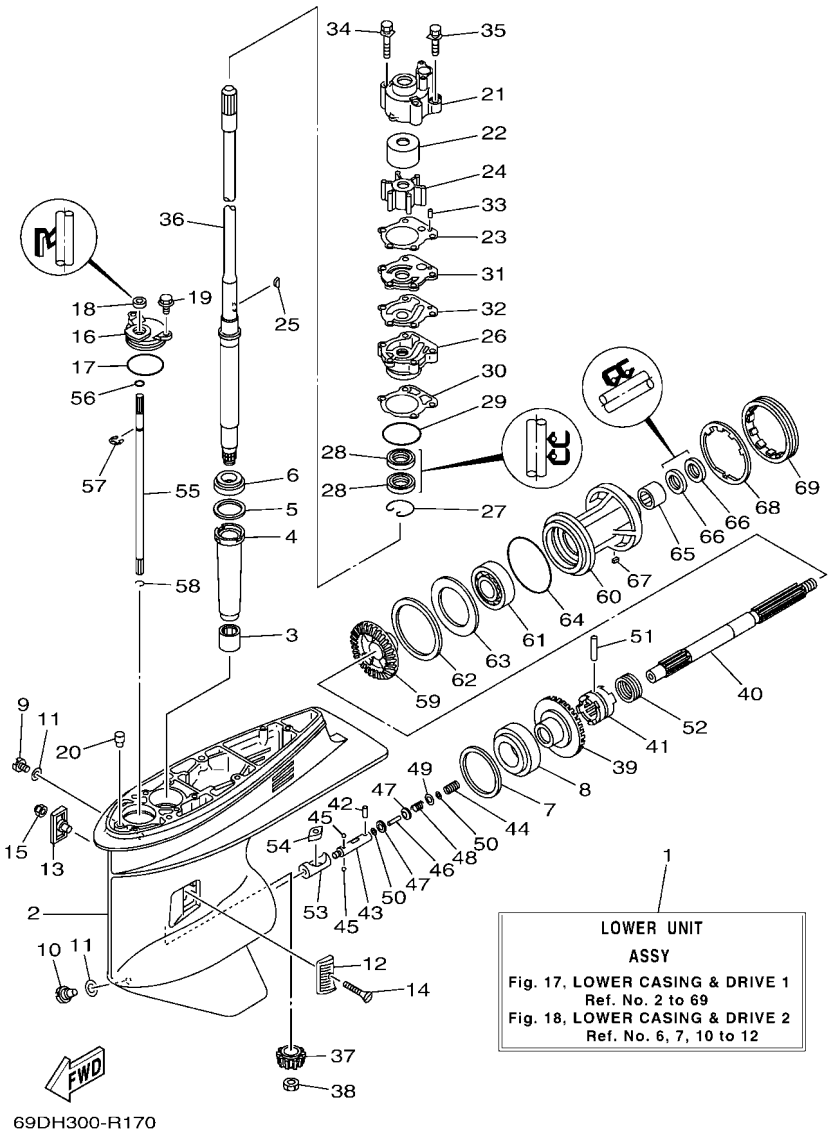

FIG. 17 LOWER CASING & DRIVE 1 — BOITIER D'HELICE TRANSMISSION1

REF. NO.	PART NO. N° PIECES	DESCRIPTION DESCRIPTION	69G					REMARKS REMARQUES
43	6H1–45634–02	SLIDE, SHIFT CONTRE-POUSSOIR	1					
44	90501–16M65	SPRING, COMPRESSION RESSORT, COMPRESSION	1					
45	93503–16003	BALL BILLES	2					
46	6H1–45668–00	SHAFT, FREE 1 AXE 1	1					
47	6H1–45635–00	PLUNGER, SHIFT POUSSOIR D'EMBRAYAGE	2					
48	90501–12M48	SPRING, COMPRESSION RESSORT, COMPRESSION	1					
49	90201–03313	WASHER, PLATE RONDELLE, PLATE	1					
50	90183–02M03	NUT, SPRING ECROU, RESSORT	2					
51	90250–07M02	PIN, STRAIGHT GOUPILLE, DROITE	1					
52	688–45633–00	RING, CROSS PIN JONC, GOUPILLE CRABOT	1					
53	6H1–45641–01	SHIFTER EMBRAYAGE	1					
54	6H1–44151–00	CAM, SHIFT CAME, INVERSION	1					
55	6H1–44144–00	ROD, SHIFT 2 TIGE D'EMBRAYAGE 2	1					
56	93210–07003	O-RING JOINT TORIQUE	1					
57	99001–08600	CIRCLIP CIRCLIP	1					
58	93450–07M00	CIRCLIP CIRCLIP	1					
59	6H3–45571–00	GEAR (28T) PIGNON (28D)	1					
60	688–45331–00–CA	HOUSING, BEARING FLASQUE, ROULEMENT	1					
61	93306–207U0	BEARING ROULEMENT	1					
62	688–45577–01	SHIM (T:0.10MM) CALE (T:0.10MM)	1					UR UR
	688–45577–10	SHIM (T:0.12MM) CALE (T:0.12MM)	1					UR UR
	688–45577–20	SHIM (T:0.15MM) CALE (T:0.15MM)	1					UR UR
	688–45577–30	SHIM (T:0.18MM) CALE (T:0.18MM)	1					UR UR
	688–45577–40	SHIM (T:0.30MM) CALE (T:0.30MM)	1					UR UR
	688–45577–50	SHIM (T:0.40MM) CALE (T:0.40MM)	1					UR UR
	688–45577–60	SHIM (T:0.50MM) CALE (T:0.50MM)	1					UR UR
63	688–45576–00	WASHER, THRUST 2 RONDELLE DE CALAGE 2	1					

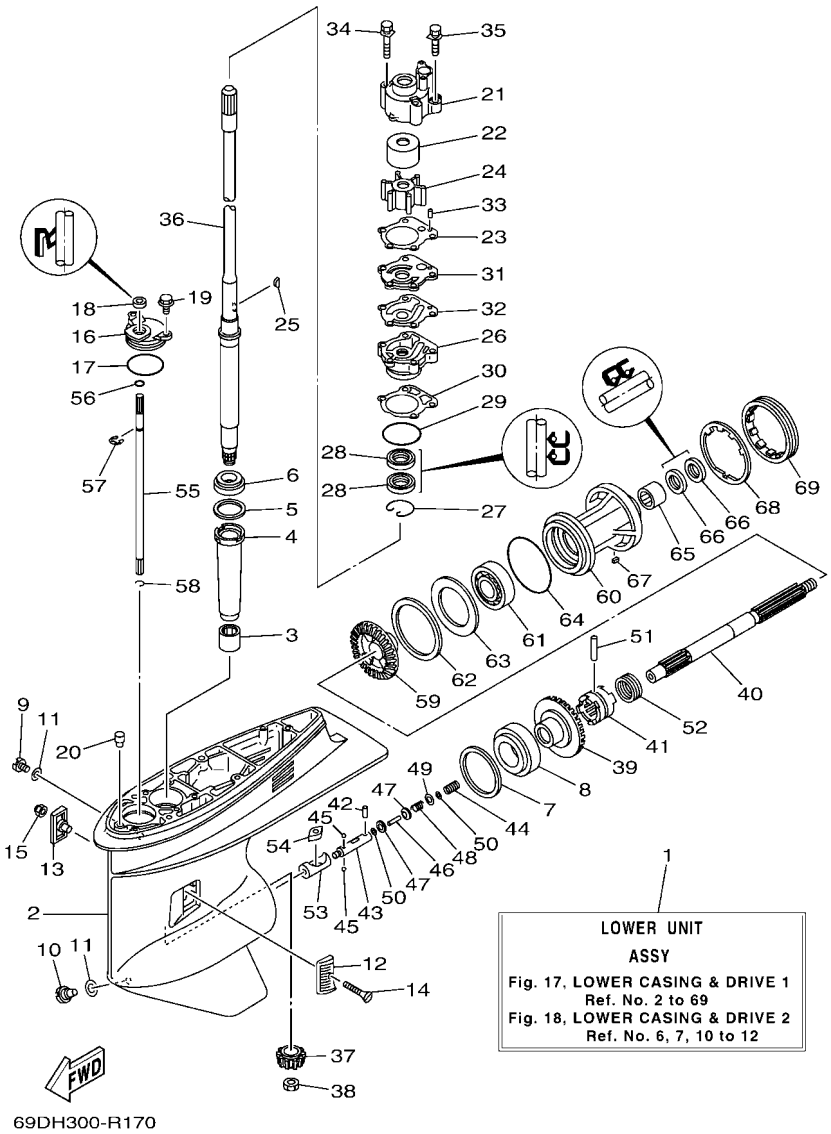

FIG. 17 LOWER CASING & DRIVE 1 — BOITIER D'HELICE TRANSMISSION1

REF. NO.	PART NO. N° PIECES	DESCRIPTION DESCRIPTION	69DS					REMARKS REMARQUES
64	93210–85M97	O-RING JOINT TORIQUE	1					
65	93317–325U0	BEARING ROULEMENT	1					
66	93101–25M03	OIL SEAL JOINT SPY	2					
67	90282–04010	KEY, STRAIGHT CLAVETTE, DROITE	1					
68	688–45383–02	WASHER, CLAW FREIN D'ECROU	1					
69	688–45384–02	NUT ECROU	1					

FIG. 18 LOWER CASING & DRIVE 2 — BOITIER D'HELICE TRANSMISSION2

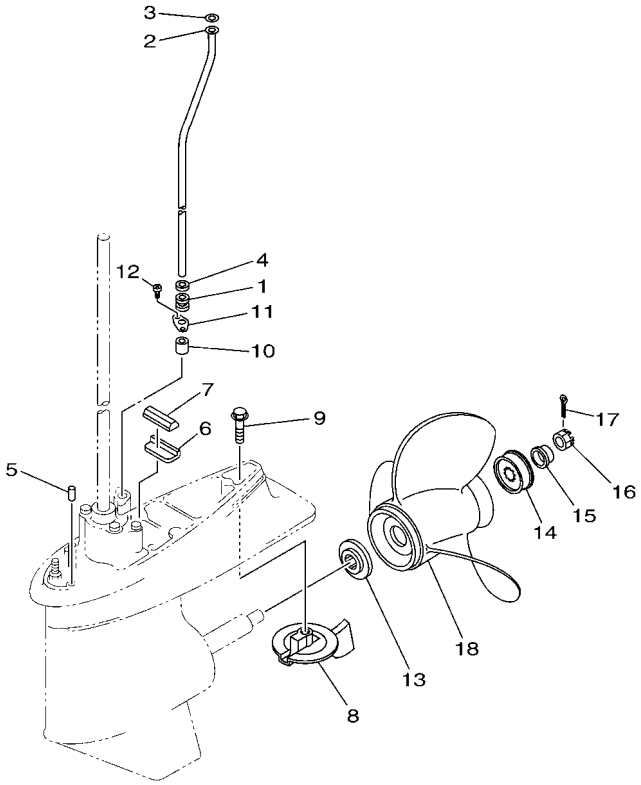

69DD700-M180

REF. NO.	PART NO. N° PIECES	DESCRIPTION DESCRIPTION	69DS					REMARKS REMARQUES
1	663–44367–01	DAMPER, WATER SEAL 3 JOINT TUBE D'EAU 3	1					
2	69D–44361–10	TUBE, WATER 1 TUBE D'EAU 1	1					L(22.5") L(22.5")
3	90202–12060	WASHER, PLATE RONDELLE, PLATE	1					
4	90430–12072	GASKET JOINT	1					
5	93606–12019	PIN, DOWEL GOUPILLE	2					
6	663–45376–00	GUIDE, SEAL DAMPER BUTEE, JOINT CAOUTCHOUC	1					
7	688–45375–00	DAMPER, SEAL BOURRELET, CAOUTCHOUC	1					
8	67F–45371–00	TAB-TRIM ANODE DERIVE	1					
9	90105–10M67	BOLT, FLANGE BOULON, A COLLERETTE	1					
10	663–44366–01	DAMPER, WATER SEAL 2 JOINT, TUBE D'EAU 2	1					
11	90480–19M06	GROMMET PASSE-FIL	1					
12	90160–04006	SCREW, ROUND TAPPING VIS, TETE RONDE FRAISEE	2					
13	688–45987–01	SPACER 1 ENTRETOISE 1	1					
14	67F–45997–00	SPACER 2 ENTRETOISE 2	1					
15	90389–25M00	BUSH DOUILLE	1					
16	90171–16011	NUT, CASTLE ECROU, CRENELE	1					
17	91490–30025	PIN. COTTER GOUPILLE	1					
18	6E5–45954–00	PROPELLER (3X14"X11"-K) HELICE (3X14"X11"-K)	1					UR UR
	6E5–45949–00	PROPELLER (3X13-5/8"X13"-K) HELICE (3X13-5/8"X13"-K)	1					UR UR
	688–45932–60	PROPELLER (3X13-1/2"X14"-K) HELICE (3X13-1/2"X14"-K)	1					UR UR
	6E5–45947–00	PROPELLER (3X13-1/2"X15"-K) HELICE (3X13-1/2"X15"-K)	1					UR UR
	688–45978–60	PROPELLER (3X13-1/2"X16"-K) HELICE (3X13-1/2"X16"-K)	1					UR UR
	688–45930–02	PROPELLER (3X13"X17"-K2) HELICE (3X13"X17"-K2)	1					UR UR
	6E5–45945–01	PROPELLER (3X13-1/4"X17"-K) HELICE (3X13-1/4"X17"-K)	1					UR UR
	6E5–45941–00	PROPELLER (3X13"X19"-K) HELICE (3X13"X19"-K)	1					UR UR
	688–45970–03	PROPELLER (3X13"X19"-K) HELICE (3X13"X19"-K)	1					UR UR
	6E5–45943–00	PROPELLER (3X12-5/8"X21"-K) HELICE (3X12-5/8"X21"-K)	1					UR UR

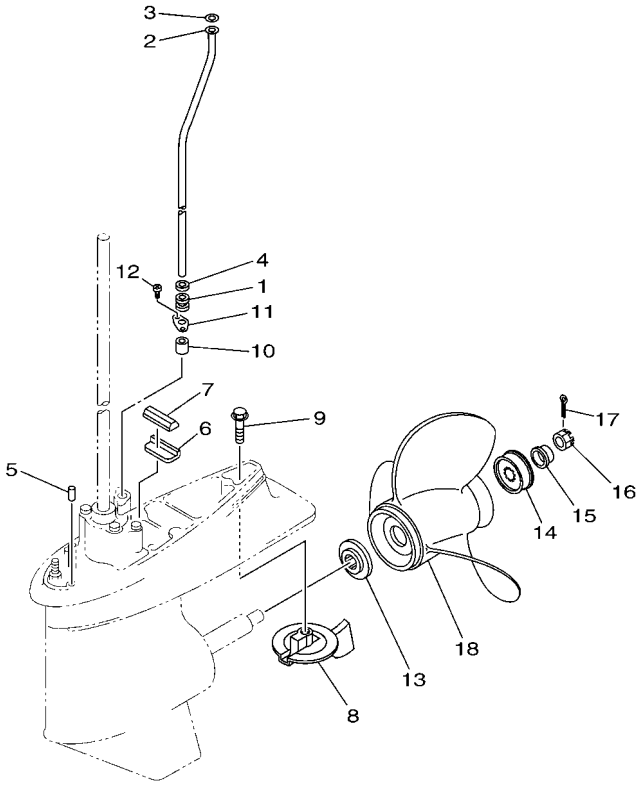

69DD700-M180

FIG. 18 LOWER CASING & DRIVE 2 — BOITIER D'HELICE TRANSMISSION2

REF. NO.	PART NO. N° PIECES	DESCRIPTION DESCRIPTION	69G					REMARKS REMARQUES
18	688–45972–02	PROPELLER (3X13"X21"-K) HELICE (3X13"X21"-K)	1					UR UR
	6E5–45952–00	PROPELLER (3X13"X23"-K) HELICE (3X13"X23"-K)	1					UR UR
	688–45974–02	PROPELLER (3X13"X23"-K) HELICE (3X13"X23"-K)	1					UR UR
	6E5–45956–00	PROPELLER (3X13"X25"-K) HELICE (3X13"X25"-K)	1					UR UR
	688–45976–01	PROPELLER (3X13"X25"-K) HELICE (3X13"X25"-K)	1					UR UR

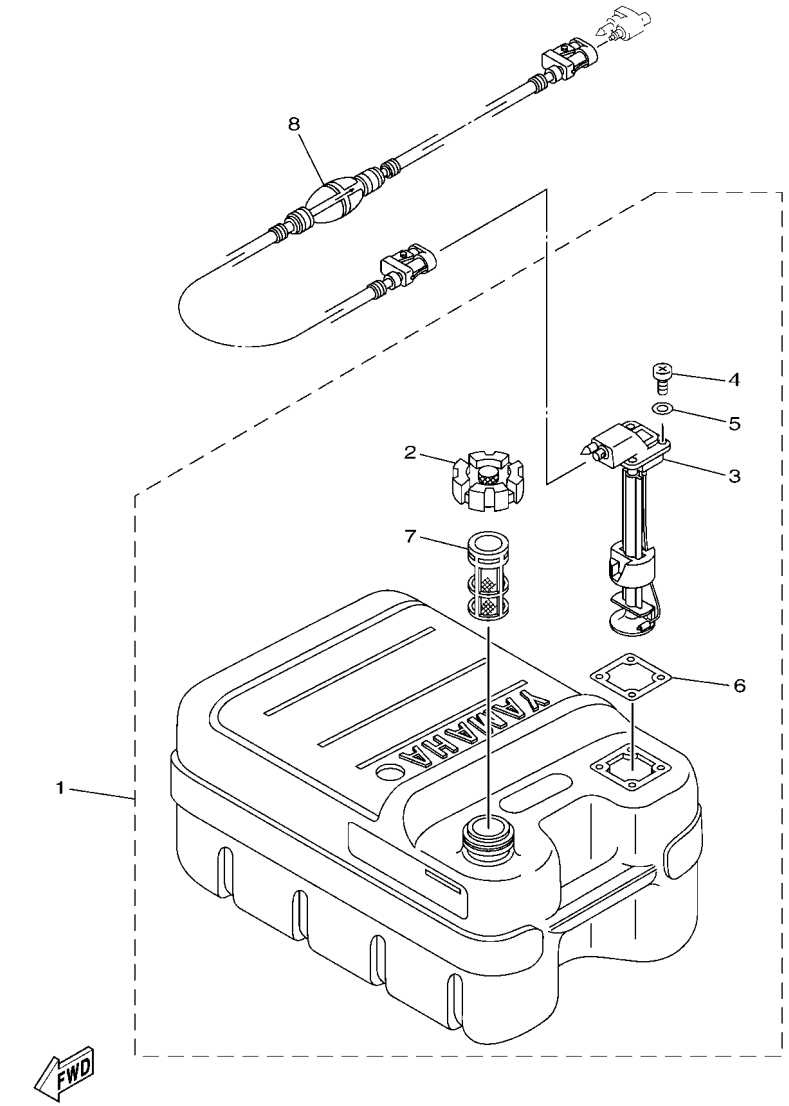

6CAD300-U280

FIG. 19 FUEL TANK — RESERVOIR A CARBURANT

REF. NO.	PART NO. N° PIECES	DESCRIPTION DESCRIPTION	6GD9					REMARKS REMARQUES
1	6YJ–24201–31	FUEL TANK ASSY (24L) RESERVOIR A ESSENCE (ENS.):24L	1					AP AP
2	6YJ–24610–01	.CAP ASSY .BOUCHON	1					
3	6Y1–24260–30	.FUEL METER ASSY .INDICATEUR DE CARBURANT	1					WITH INDICATOR WITH INDICATOR
4	90157–05M19	.SCREW, PAN HEAD .VIS, TETE TRONCONIQUE	4					
5	6Y1–24329–00	.SEAL .JOINT	4					
6	6Y1–24268–01	.GASKET, FUEL METER .JOINT, JAUGE A CARBURANT	1					
7	6YJ–24167–00	.STRAINER .FILTRE	1					
8	6YL–24306–54	FUEL PIPE COMP. 1 DURITE A ESSENCE 1	1					AP AP

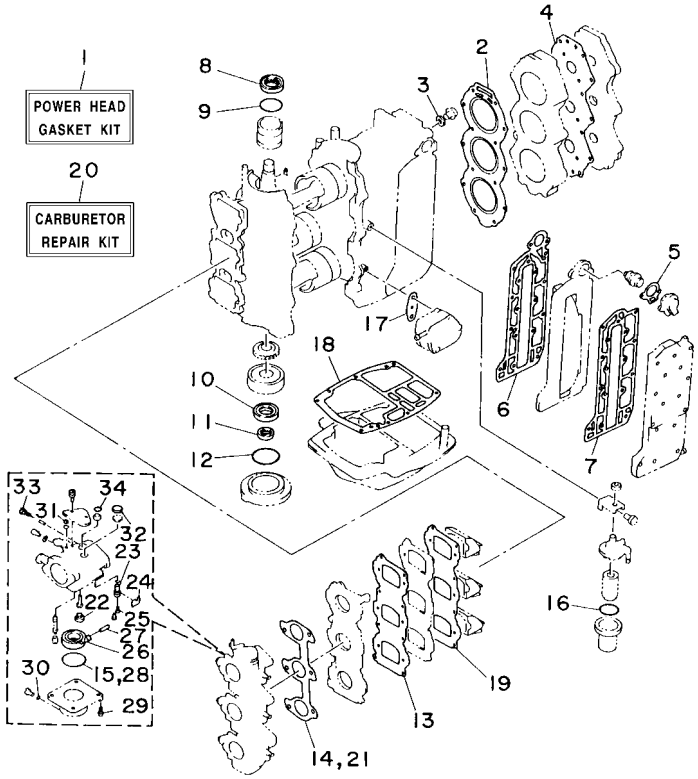

FIG. 20 REPAIR KIT 1 — KITS DE REPARATION 1

REF. NO.	PART NO. N° PIECES	DESCRIPTION DESCRIPTION	69D9					REMARKS REMARQUES
1	69D–W0001–01	POWER HEAD GASKET KIT KIT DE JOINTS TETE MOTRICE	1					
2	6H3–11181–A2	.GASKET, CYLINDER HEAD 1 .JOINT, DE CULASSE 1	1					
3	90430–14115	.GASKET .JOINT	1					
4	6H3–11193–A1	.GASKET, HEAD COVER 1 .JOINT, COUVERCLE DE CULASSE 1	1					
5	62Y–12414–01	.GASKET, COVER .JOINT, COUVERCLE	1					
6	6H3–41112–A0	.GASKET, EXHAUST INNER COVER .JOINT, PLAQUE D'ECHAPPEMENT	1					
7	6H3–41114–A0	.GASKET, EXHAUST OUTER COVER .JOINT, COUVERCLE D'ECHAPPEMENT	1					
8	93102–36M24	.OIL SEAL .JOINT SPY	1					
9	93210–46M16	.O-RING .JOINT TORIQUE	1					
10	93102–30009	.OIL SEAL .JOINT SPY	1					
11	93106–18001	.OIL SEAL .JOINT SPY	1					
12	93210–65M50	.O-RING .JOINT TORIQUE	1					
13	6H3–13621–A1	.GASKET, VALVE SEAT .JOINT, SIEGE DE CLAPET	1					
14	6H3–14198–A1	.GASKET .JOINT	1					
15	6G1–14984–00	.O-RING .JOINT TORIQUE	3					
16	61A–24564–01	.O-RING .JOINT TORIQUE	1					
17	650–24431–A0	.GASKET, FUEL PUMP 1 .JOINT 1 DE POMPE A ESSENCE	1					
18	6H3–45113–A0	.GASKET, UPPER CASING .JOINT, TUBE D'ARBRE	1					
19	6H3–13622–A1	.GASKET, VALVE SEAT .JOINT, SIEGE DE CLAPET	1					
20	6H3–W0093–03	CARBURETOR REPAIR KIT KIT DE REPARATION CARBURATEUR	1					
21	6H3–14198–A1	.GASKET .JOINT	1					
22	679–14966–00	.RUBBER CAP .CAPUCHON	3					
23	6H3–14590–02	.NEEDLE VALVE ASSY .POINTEAU	3					
24	633–14159–00	.CLIP .JONC	3					
25	676–14186–00	.PIN, FLOAT .AXE, FLOTTEUR	3					
26	6G1–14985–00	.FLOAT .FLOTTEUR	3					
27	688–14548–00	.PIN, FLOAT ARM .AXE, BRAS DE FLOTTEUR	3					

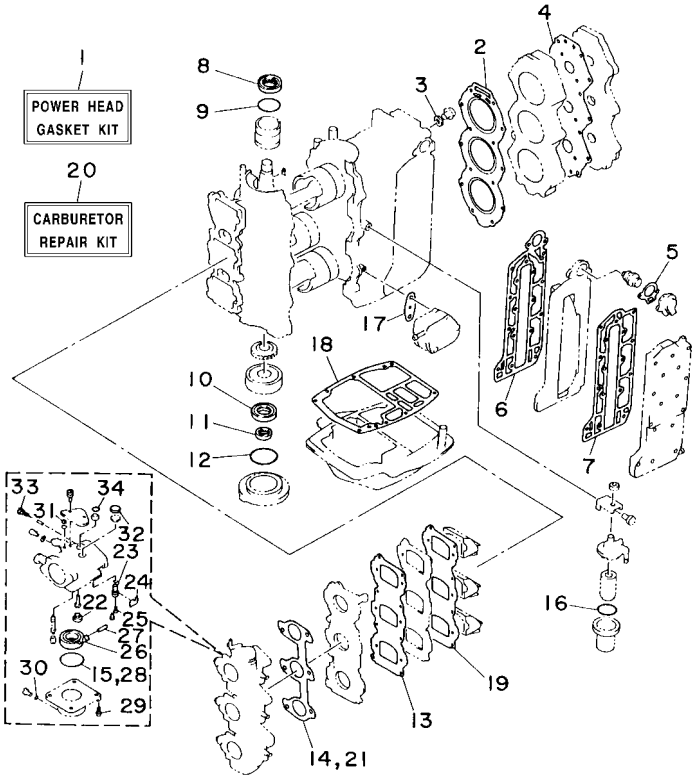

6H20010-4180

FIG. 20 REPAIR KIT 1 — KITS DE REPARATION 1

REF. NO.	PART NO. N° PIECES	DESCRIPTION DESCRIPTION	69DS					REMARKS REMARQUES
28	6G1–14984–00	.O-RING .JOINT TORIQUE	3					
29	97980–04114	.SCREW, WITH WASHER .VIS, AVEC RONDELLE	3					
30	93210–04230	.O-RING .JOINT TORIQUE	3					
31	663–14126–00	.GASKET .JOINT	3					
32	688–14126–00	.GASKET .JOINT	3					
33	692–14923–00	.SCREW, PILOT .VIS, RALENTI	3					
34	93210–15M52	.O-RING .JOINT TORIQUE	3					

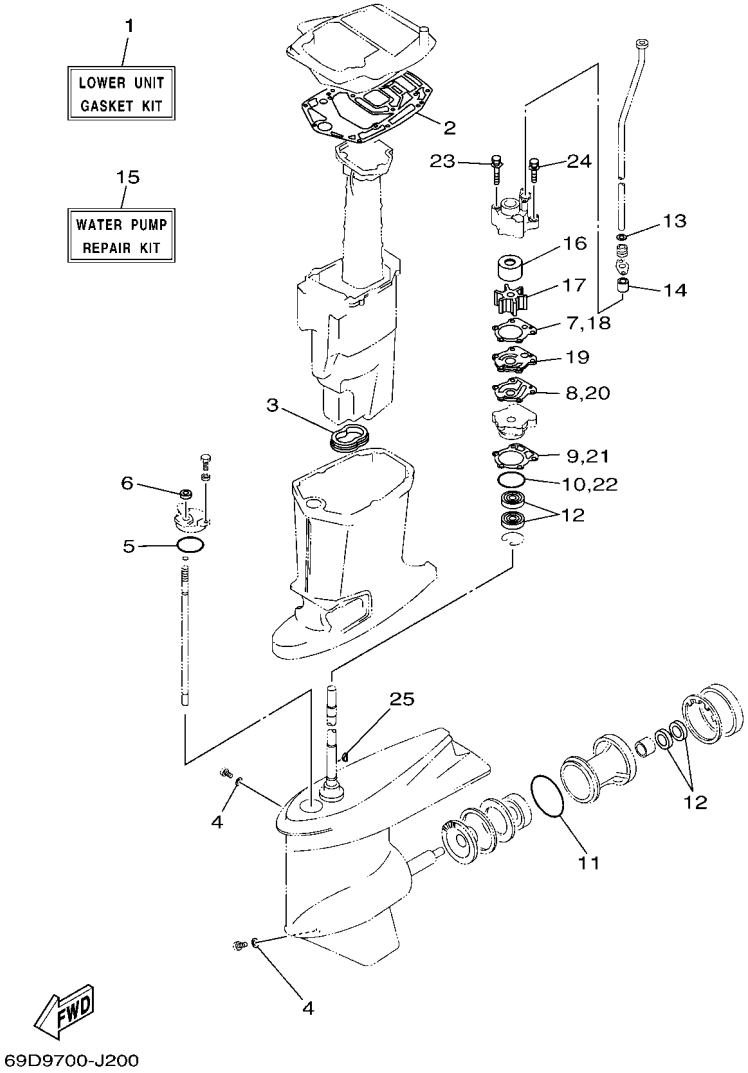

FIG. 21 REPAIR KIT 2 — KITS DE REPARATION 2

REF. NO.	PART NO. N° PIECES	DESCRIPTION DESCRIPTION	69DS					REMARKS REMARQUES
1	69D–W0001–21	LOWER UNIT GASKET KIT POCHETTE DE JOINTS EMBASE	1					
2	6H3–45114–A1	.GASKET, UPPER CASING .JOINT, TUBE D'ARBRE	1					
3	6H3–45123–00	.GASKET, MUFFLER .JOINT, POT DE DETENTE	1					
4	90430–08003	.GASKET .JOINT	2					
5	93210–49046	.O-RING .JOINT TORIQUE	1					
6	93106–09014	.OIL SEAL .JOINT SPY	1					
7	688–44315–A0	.GASKET, WATER PUMP .JOINT, POMPE A EAU	1					
8	688–44324–A0	.GASKET, CARTRIDGE .JOINT	1					
9	688–44316–A0	.GASKET, WATER PUMP .JOINT, POMPE A EAU	1					
10	93210–46044	.O-RING .JOINT TORIQUE	1					
11	93210–85M97	.O-RING .JOINT TORIQUE	1					
12	93101–25M03	.OIL SEAL .JOINT SPY	4					
13	90430–12072	.GASKET .JOINT	1					
14	663–44366–01	.DAMPER, WATER SEAL 2 .JOINT, TUBE D'EAU 2	1					
15	69D–W0078–00	WATER PUMP REPAIR KIT KIT DE REPARATION DE LA POMPE	1					
16	69D–44322–00	.INSERT, CARTRIDGE .CUVETTE	1					
17	688–44352–03	.IMPELLER .TURBINE	1					
18	688–44315–A0	.GASKET, WATER PUMP .JOINT, POMPE A EAU	1					
19	688–44323–40	.OUTER PLATE, CARTRIDGE .PLAQUE EXTERIEURE	1					
20	688–44324–A0	.GASKET, CARTRIDGE .JOINT	1					
21	688–44316–A0	.GASKET, WATER PUMP .JOINT, POMPE A EAU	1					
22	93210–46044	.O-RING .JOINT TORIQUE	1					
23	90119–08196	.BOLT, WITH WASHER .BOULON, AVEC RONDELLE	2					
24	90119–08192	.BOLT, WITH WASHER .BOULON, AVEC RONDELLE	2					
25	90280–04M04	.KEY, WOODRUFF .CLAVETTE, DEMI-LUNE	1					

NUMERICAL INDEX
INDEX NUMERIQUE

PART NO. N° PIECES	REF. NO.
6H3–11111–01–1S	3 – 24
6K5–11119–01	3 – 20
6H3–11181–A2	3 – 25
	20 – 2
6H3–11191–00–1S	3 – 26
6H3–11193–A1	3 – 27
	20 – 4
6H3–11325–01	1 – 1
	3 – 16
6H3–11327–00–94	3 – 17
6H3–11328–01	3 – 18
650–11370–01	3 – 4
688–11370–01	3 – 3
6K5–11601–02	4 – 13
6K5–11601–12	4 – 13
6K5–11601–22	4 – 13
6K5–11631–03–95	4 – 12
6H3–11633–00	4 – 14
688–11634–10	4 – 15
6K5–11635–03	4 – 12
6K5–11636–03	4 – 12
6H3–12411–11	1 – 2
	3 – 31
688–12412–00	3 – 32
6H3–12413–00–1S	3 – 33
62Y–12414–01	1 – 3
	3 – 34
	20 – 5
6H2–13610–00	5 – 1
6H3–13621–A1	5 – 5
	20 – 13
6H3–13622–A1	5 – 7
	20 – 19
6H3–13624–00	5 – 6
6H3–13641–04	5 – 4
663–14126–00	6 – 19
	20 – 31
688–14126–00	6 – 21
	20 – 32
633–14159–00	6 – 9
	20 – 24
676–14186–00	6 – 10
	20 – 25
6H3–14198–A1	5 – 10
	20 – 14
	20 – 21
6K5–14301–12	6 – 1
6K5–14302–12	6 – 2

PART NO. N° PIECES	REF. NO.
6K5–14303–12	6 – 3
6A0–14325–00	7 – 31
6H3–14413–12	5 – 17
6H3–14440–02	5 – 18
6H3–14457–02	5 – 19
624–14485–00	3 – 5
63V–14523–00	6 – 29
663–14527–00	6 – 20
688–14527–00	6 – 22
6H2–14527–01	6 – 23
688–14548–00	6 – 13
	20 – 27
697–14555–00	6 – 26
6H2–14578–00	6 – 31
6H3–14578–00	6 – 32
6H3–14590–02	6 – 8
	20 – 23
6K5–14592–00	6 – 27
6H3–14711–11–CA	16 – 12
6H3–14737–11	16 – 17
692–14923–00	6 – 25
	20 – 33
676–14943–34	6 – 5
6K5–14945–36	6 – 35
6H2–14947–02	6 – 4
6H4–14948–15	6 – 6
6K5–14950–21	6 – 36
679–14966–00	6 – 7
	20 – 22
6H2–14980–00	6 – 15
6G1–14984–00	6 – 14
	20 – 15
	20 – 28
6G1–14985–00	6 – 12
	20 – 26
6H3–14992–01	6 – 17
69D–15100–00	3 – 2
6H3–15359–00–94	4 – 1
692–15711–01	8 – 2
663–15713–00	8 – 5
663–15714–02	8 – 6
663–15715–00	8 – 12
696–15716–00	8 – 13
663–15719–00	8 – 15
6K5–15723–00	8 – 44
663–15726–01	8 – 10
696–15734–00	8 – 14
663–15735–01	8 – 47

PART NO. N° PIECES	REF. NO.
663–15736–01	8 – 52
663–15739–00	8 – 4
663–15741–02	8 – 8
663–15744–00	8 – 11
663–15752–00	8 – 18
6F5–15753–00	8 – 19
663–15754–00	8 – 9
689–15755–02	8 – 23
6K5–15758–01–94	8 – 38
6K5–15761–00	2 – 12
6K5–15762–00	8 – 42
663–15764–00	8 – 7
6K5–15770–01	8 – 45
6K5–15771–00–94	8 – 33
6K5–15772–00–94	8 – 35
648–15773–00	8 – 3
6K5–15773–01	8 – 37
6K5–15774–00	8 – 56
6F5–15779–02	8 – 25
697–15789–01	8 – 43
6F5–15791–00	8 – 20
663–15794–00	8 – 49
6YJ–24167–00	19 – 7
6YJ–24201–31	19 – 1
6Y1–24260–30	19 – 3
6Y1–24268–01	19 – 6
6G1–24304–10	7 – 1
6YL–24306–54	19 – 8
69D–24311–00	7 – 3
69D–24312–00	7 – 19
663–24312–01	3 – 41
6H3–24313–00	7 – 38
6H3–24314–00	7 – 40
6Y1–24329–00	19 – 5
688–24378–00	7 – 37
692–24410–01	7 – 22
663–24411–00	7 – 27
692–24411–00	7 – 24
6A0–24412–02	7 – 32
6A0–24413–00	7 – 23
6A0–24421–01	7 – 30
650–24431–A0	7 – 33
	20 – 17
648–24434–01	7 – 25
648–24435–03	7 – 28
61A–24469–00	7 – 12
61A–24521–00	7 – 7
65L–24531–01	7 – 8

PART NO. N° PIECES	REF. NO.
60H–24558–00	7 – 13
61A–24560–05	7 – 6
61A–24563–02	1 – 6
	7 – 11
61A–24564–01	1 – 5
	7 – 9
	20 – 16
69D–24566–01	7 – 16
61A–24577–01	7 – 10
6YJ–24610–01	19 – 2
692–26301–03	12 – 18
6H3–41111–01–1S	3 – 36
6H3–41112–A0	3 – 37
	20 – 6
6H3–41113–02–1S	3 – 38
6H3–41114–A0	3 – 39
	20 – 7
6H2–41131–01–CA	16 – 10
6H3–41137–01–CA	16 – 5
6H3–41213–20	13 – 22
6H3–41217–00	5 – 11
662–41237–01	13 – 14
	13 – 20
682–41237–50	13 – 19
6H3–41238–00	13 – 1
6H3–41257–00	5 – 12
661–41262–02	5 – 13
	5 – 16
6H3–41271–01	5 – 14
689–41273–00	5 – 15
6H4–41611–00	9 – 11
6H3–41612–00	9 – 12
6H3–41612–10	9 – 14
6K5–41618–01	9 – 15
6H3–41631–00	13 – 2
6H3–41632–00	13 – 8
6H3–41633–00	13 – 11
679–41636–00	13 – 15
663–42111–02–8D	12 – 1
663–42115–00	12 – 9
664–42119–00	12 – 2
692–42121–02–8D	12 – 19
663–42126–01	12 – 45
663–42133–01	12 – 13
663–42134–03–94	12 – 14
663–42135–01	12 – 12
61U–42137–00	12 – 4
663–42138–00	12 – 10

PART NO. N° PIECES	REF. NO.
6G1–42177–01	12 – 3
6H3–42191–01	12 – 39
6H3–42192–00	12 – 41
69D–42510–11–8D	15 – 1
69D–42610–32	2 – 1
6H3–42613–01–8D	2 – 9
6H3–42615–01	2 – 11
6K5–4261A–02	2 – 2
6H3–42647–00	2 – 3
6H3–42649–00	2 – 4
6H3–42652–00	2 – 6
663–42662–01	2 – 5
688–42675–51	2 – 13
688–42676–51	2 – 14
6H2–42678–11	2 – 17
	2 – 18
63D–42681–41	2 – 15
	2 – 16
6H3–42711–06–8D	11 – 1
648–42715–00	13 – 27
6H3–42716–02	11 – 12
6K5–42717–01	11 – 13
6H3–42718–01	11 – 31
6E5–42724–01	11 – 14
6K5–42725–01	11 – 15
6H4–42726–01	11 – 23
6H3–42727–01	11 – 18
6H3–42738–01–CA	11 – 16
6H3–42741–01–8D	11 – 27
6BG–42748–01	11 – 19
6H3–42768–01	11 – 22
6H3–42771–01–8D	11 – 28
6EE–42794–40	11 – 32
6EE–42794–50	11 – 33
6H3–42813–00	11 – 7
6H3–42815–01–8D	11 – 3
6H3–42816–00	11 – 9
6H3–42817–01–8D	11 – 4
6H3–42818–00	11 – 10
69D–43107–12–8D	14 – 31
63D–43111–01–8D	14 – 1
63D–43112–01–8D	14 – 6
648–43114–01	14 – 9
663–43116–01	14 – 10
663–43118–01–8D	14 – 12
69D–43126–01	14 – 36
63D–43128–01–8D	14 – 13
63D–43131–01	14 – 17

PART NO. N° PIECES	REF. NO.
6G5–43144–00	14 – 46
6G5–43145–01	14 – 21
6G5–43148–00	14 – 26
688–43160–01	14 – 29
6H5–43181–03	14 – 22
6H5–43185–03	14 – 23
69D–43311–11–8D	14 – 14
682–43318–01	14 – 44
69D–43631–00	14 – 32
63D–43691–00	14 – 16
697–44113–00	12 – 27
6H3–44117–00–94	13 – 30
6K5–44120–13	13 – 26
6H3–44121–01	13 – 35
688–44122–00	13 – 38
6H1–44144–00	17 – 55
6H1–44151–00	17 – 54
692–44159–01	12 – 30
663–44173–01	12 – 31
6K5–44191–00	12 – 28
688–44194–00	13 – 5
69D–44194–10	15 – 30
688–44311–01	17 – 21
688–44315–A0	17 – 23
	21 – 7
	21 – 18
688–44316–A0	17 – 30
	21 – 9
	21 – 21
69D–44322–00	17 – 22
	21 – 16
688–44323–40	17 – 31
	21 – 19
688–44324–A0	17 – 32
	21 – 8
	21 – 20
6D8–44341–01–CA	17 – 26
688–44352–03	17 – 24
	21 – 17
69D–44361–10	18 – 2
663–44366–01	18 – 10
	21 – 14
663–44367–01	18 – 1
69D–44391–00	11 – 2
688–44511–00	15 – 26
688–44514–00	15 – 19
69D–44551–11–8D	15 – 7
6H3–44553–10–8D	15 – 17

NUMERICAL INDEX
INDEX NUMERIQUE

PART NO. N° PIECES	REF. NO.
687–44555–00	15 – 9
663–44575–01	15 – 25
688–44575–01	15 – 14
6H3–45111–13–8D	16 – 1
6H3–45113–A0	16 – 7
	20 – 18
6H3–45114–A1	16 – 15
	21 – 2
6H3–45123–00	16 – 14
	21 – 3
6H3–45127–01	16 – 13
6C5–45155–02	16 – 3
696–45211–01–8D	16 – 18
6H1–45214–00	17 – 12
6H1–45215–00	17 – 13
663–45251–00	1 – 7
	14 – 34
63D–45251–01	1 – 8
	14 – 2
6H1–45251–03	1 – 8
69D–45300–13–8D	17 – 1
6H1–45301–03–8D	17 – 2
688–45321–00	17 – 16
688–45331–00–CA	17 – 60
688–45341–10	17 – 10
67F–45371–00	1 – 10
	18 – 8
688–45375–00	18 – 7
663–45376–00	18 – 6
6J8–45378–00	17 – 20
688–45383–02	17 – 68
688–45384–02	17 – 69
69D–45501–10	17 – 36
688–45536–01	17 – 4
6K5–45551–00	17 – 37
6K5–45560–00	17 – 39
688–45567–01	17 – 7
688–45567–10	17 – 7
688–45567–20	17 – 7
688–45567–30	17 – 7
688–45567–40	17 – 7
688–45567–50	17 – 7
688–45567–60	17 – 7
6H3–45571–00	17 – 59
688–45576–00	17 – 63
688–45577–01	17 – 62
688–45577–10	17 – 62
688–45577–20	17 – 62

PART NO. N° PIECES	REF. NO.
688–45577–30	17 – 62
688–45577–40	17 – 62
688–45577–50	17 – 62
688–45577–60	17 – 62
688–45587–01	17 – 5
688–45587–10	17 – 5
688–45587–20	17 – 5
688–45587–30	17 – 5
688–45587–40	17 – 5
688–45587–50	17 – 5
688–45587–60	17 – 5
6H1–45611–01	17 – 40
6H1–45631–01	17 – 41
688–45633–00	17 – 52
6H1–45634–02	17 – 43
6H1–45635–00	17 – 47
6H1–45641–01	17 – 53
6H1–45668–00	17 – 46
688–45930–02	18 – 18
688–45932–60	18 – 18
6E5–45941–00	18 – 18
6E5–45943–00	18 – 18
6E5–45945–01	18 – 18
6E5–45947–00	18 – 18
6E5–45949–00	18 – 18
6E5–45952–00	18 – 18
6E5–45954–00	18 – 18
6E5–45956–00	18 – 18
688–45970–03	18 – 18
688–45972–02	18 – 18
688–45974–02	18 – 18
688–45976–01	18 – 18
688–45978–60	18 – 18
688–45987–01	18 – 13
67F–45997–00	18 – 14
700–48339–00	12 – 42
6FM–48344–00	13 – 17
	13 – 39
6H3–48538–00	13 – 40
6K5–81332–60	9 – 16
6H3–81916–00	10 – 18
6H3–81922–01	10 – 7
6EE–81994–40	5 – 22
6EE–81994–50	5 – 23
6EE–81995–40	8 – 59
6EE–81995–50	8 – 60
703–82119–01	11 – 24
69D–82127–00	15 – 18

PART NO. N° PIECES	REF. NO.
63D–82148–00	14 – 7
6H1–82148–00	14 – 4
6A0–82317–01	8 – 39
6G1–82370–21	10 – 22
69D–82531–00	10 – 2
682–82556–00	12 – 50
688–82560–10	10 – 26
6K5–82575–03	12 – 49
689–8257Y–00	12 – 51
6H3–85510–A1	9 – 2
663–85518–00	9 – 4
6H3–85520–00	9 – 3
6H3–85533–A0	9 – 6
6H3–85540–13	10 – 13
6H3–85542–00	10 – 3
6K5–85550–11	9 – 1
6H3–85570–11	10 – 20
69D–W0001–01	20 – 1
69D–W0001–21	21 – 1
688–W0004–00	5 – 2
69D–W0078–00	1 – 11
	21 – 15
69D–W0090–04–1S	3 – 1
6H3–W0093–03	20 – 20
69D–W1140–01	4 – 6
692–W1571–04	8 – 1
656–W2810–03	7 – 42
90101–06M27	12 – 46
90101–08002	3 – 21
90101–10041	15 – 20
90101–12063	14 – 48
90101–12075	12 – 20
90105–06M14	10 – 4
90105–10M67	18 – 9
90109–12M21	15 – 13
90116–06M07	10 – 8
90116–08M69	3 – 29
90116–10063	15 – 28
90116–10M31	16 – 20
90116–18M52	14 – 40
90119–06023	3 – 19
90119–06275	11 – 11
90119–06290	8 – 41
90119–06291	11 – 21
90119–06305	13 – 13
90119–06309	13 – 25
90119–06MA3	3 – 35
	5 – 8

PART NO. N° PIECES	REF. NO.
90119–06MA5	3 – 40
90119–08087	8 – 29
90119–08155	16 – 21
90119–08180	8 – 30
90119–08192	17 – 35
	21 – 24
90119–08196	17 – 34
	21 – 23
90119–08M64	3 – 8
90119–08M81	16 – 4
90119–08MA5	3 – 28
90119–10005	3 – 7
90149–05095	8 – 51
90151–05M00	17 – 14
90152–05011	12 – 5
90152–06M01	14 – 35
90157–05M19	19 – 4
90157–06M13	13 – 3
90160–04006	18 – 12
90170–16M01	17 – 38
90170–18M10	14 – 43
90170–20137	9 – 9
90171–16011	18 – 16
90175–06003	12 – 48
90179–08M34	3 – 30
90183–02M03	17 – 50
90185–05002	17 – 15
90185–10027	12 – 36
	15 – 24
	15 – 29
90185–12058	12 – 26
90185–22043	14 – 20
90201–03313	17 – 49
90201–05552	6 – 28
90201–06068	7 – 15
90201–06M31	13 – 9
90201–10120	12 – 35
90201–10M02	12 – 6
90201–11M22	15 – 23
90201–12062	14 – 49
90201–12426	14 – 50
90201–12537	12 – 24
90201–12M16	15 – 10
90201–12M34	12 – 38
90201–13M19	15 – 12
90201–20417	4 – 17
90201–20M21	15 – 21
90201–21M18	9 – 10

PART NO. N° PIECES	REF. NO.
90201–22M03	14 – 19
90201–30M00	15 – 2
90202–07M07	13 – 37
90202–12060	18 – 3
90202–12092	12 – 23
90202–20M06	15 – 22
90202–25M04	15 – 11
90206–10M04	13 – 23
90206–12054	12 – 25
90206–13M10	11 – 6
90209–06M05	5 – 21
90243–04007	14 – 11
90249–06M19	14 – 28
90250–07M02	17 – 51
90254–03003	12 – 11
90266–06009	2 – 8
90269–04M03	11 – 8
90280–04M04	17 – 25
	21 – 25
90280–05015	9 – 8
90282–04010	17 – 67
90338–05M03	11 – 25
	11 – 26
90340–08002	17 – 9
90340–14M06	3 – 22
90385–12M04	8 – 31
90386–06088	12 – 40
90386–07M58	13 – 32
90386–08032	12 – 8
90386–10009	12 – 34
90386–10025	14 – 25
90386–10M16	14 – 24
90386–12089	12 – 22
90386–13M38	11 – 5
90386–18M44	14 – 41
90386–22M15	14 – 18
90386–30M60	15 – 6
90386–30M77	15 – 4
90386–30M78	15 – 3
90387–06119	8 – 40
90387–06289	13 – 6
	13 – 24
90387–06M43	10 – 5
90387–06M59	13 – 12
90387–06M69	11 – 20
90387–08M05	8 – 32
90387–12M30	12 – 37
90387–16003	14 – 37

PART NO. N° PIECES	REF. NO.
90387–16004	14 – 38
90389–25M00	18 – 15
90430–08003	1 – 9
	17 – 11
	21 – 4
90430–12072	18 – 4
	21 – 13
90430–14115	3 – 23
	20 – 3
90445–07M02	3 – 11
90445–07M44	3 – 9
90445–07M45	3 – 12
90445–07M82	3 – 13
90445–09072	7 – 35
90445–09220	7 – 39
90446–10M02	10 – 27
90464–04M12	10 – 12
90464–07M05	3 – 15
90464–07M10	10 – 17
90464–08M07	10 – 15
	12 – 52
90464–10M59	7 – 5
90464–12M17	10 – 16
90465–06M90	8 – 58
	10 – 23
90465–08M83	7 – 21
90465–11M10	7 – 4
	7 – 20
90467–06016	3 – 10
	3 – 14
90467–08004	3 – 42
	7 – 36
	7 – 41
90468–18008	8 – 53
	13 – 18
	13 – 36
90480–13M24	10 – 6
90480–19M06	18 – 11
90501–10326	6 – 30
90501–12082	13 – 29
90501–12M48	17 – 48
90501–16M17	12 – 32
90501–16M65	17 – 44
90501–23215	12 – 7
90502–16M02	14 – 30
90506–08M23	8 – 48
90506–14M24	14 – 45
90508–12015	8 – 50

NUMERICAL INDEX
INDEX NUMERIQUE

PART NO. N° PIECES	REF. NO.
90508–29051	13 – 10
91490–16012	8 – 55
91490–20012	13 – 34
91490–25012	12 – 44
91490–30025	18 – 17
91690–30020	14 – 27
92903–06100	10 – 25
92903–06200	8 – 54
92903–08100	8 – 27
92903–08600	8 – 28
92990–06100	10 – 11
92990–06200	10 – 10
92990–06600	12 – 43
	12 – 47
92990–08200	13 – 33
92990–10100	16 – 23
92990–12200	12 – 21
92995–06100	8 – 17
	8 – 22
92995–10600	16 – 24
92995–18600	14 – 42
93101–25M03	17 – 28
	17 – 66
	21 – 12
93102–30009	4 – 2
	20 – 10
93102–36M24	4 – 8
	20 – 8
93106–09014	17 – 18
	21 – 6
93106–18001	4 – 3
	20 – 11
93210–04228	6 – 34
93210–04230	6 – 18
	20 – 30
93210–07003	17 – 56
93210–15M52	6 – 33
	20 – 34
93210–29M94	15 – 5
93210–46044	17 – 29
	21 – 10
	21 – 22
93210–46M16	4 – 11
	20 – 9
93210–49046	17 – 17
	21 – 5
93210–65M50	4 – 4
	20 – 12

PART NO. N° PIECES	REF. NO.
93210–85M97	17 – 64
	21 – 11
93306–207U0	17 – 61
93306–306V1	4 – 10
93311–636U6	4 – 7
93315–325V1	17 – 3
93317–325U0	17 – 65
93332–000U3	17 – 6
93332–000W7	17 – 8
93410–16097	14 – 39
93410–28M06	15 – 8
93440–49M04	4 – 9
93450–07M00	17 – 58
93450–44166	17 – 27
93501–04M02	13 – 28
93503–16003	17 – 45
93515–32M01	12 – 33
93603–12M11	17 – 42
93603–18M09	4 – 16
93604–10M03	17 – 33
93606–12019	16 – 2
	16 – 6
	16 – 19
	18 – 5
93608–12063	3 – 6
93700–06002	12 – 15
93700–06004	14 – 15
94702–00160	1 – 4
94702–00247	1 – 4
	3 – 43
95380–03600	7 – 26
95380–05600	13 – 16
	13 – 21
95380–06600	13 – 4
95380–06700	10 – 9
95380–10600	16 – 22
95380–12600	14 – 51
95380–12800	15 – 15
97013–06012	8 – 57
	10 – 24
97013–08012	8 – 26
97017–06025	8 – 21
97095–06016	8 – 16
97513–06512	10 – 1
97513–06516	12 – 29
97513–06520	13 – 31
97513–06525	8 – 34
	10 – 21

PART NO. N° PIECES	REF. NO.
97513–06530	9 – 7
97513–06555	8 – 36
97885–05012	12 – 17
97885–06008	12 – 16
	14 – 8
97885–06045	5 – 20
97902–05125	9 – 5
97980–04114	6 – 16
	20 – 29
97980–05128	7 – 29
97980–05216	5 – 3
97980–05310	6 – 24
97980–06225	10 – 14
97985–06210	9 – 17
97985–06212	9 – 13
	10 – 19
97D95–06010	14 – 33
97D95–06025	13 – 7
97D95–06095	5 – 9
97E75–08530	16 – 8
	16 – 11
	16 – 16
97E75–08535	15 – 27
	16 – 9
97E75–08540	15 – 16
97E95–06416	7 – 14
97E95–06510	14 – 5
97E95–06512	8 – 46
	14 – 47
97E95–06514	7 – 17
97E95–06516	2 – 10
	7 – 18
	11 – 17
	17 – 19
97E95–06520	4 – 5
	11 – 30
97E95–06525	7 – 2
	11 – 29
	14 – 3
97E95–06540	7 – 34
97E95–06616	2 – 7
98580–04008	6 – 11
99001–08600	17 – 57

PART NO. N° PIECES	REF. NO.

PART NO. N° PIECES	REF. NO.

PART NO. N° PIECES	REF. NO.