YAMAHA

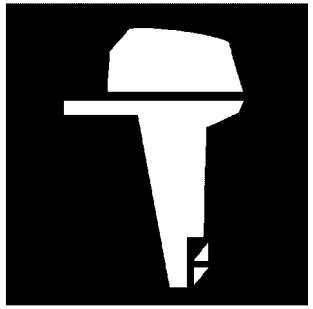

PARTS CATALOGUE
CATALOGUE DE PIECES DETACHEES

FT50JET'24 (6C2M)
FT60GET'24 (6C6M)

YAMAHA
GENUINE
Parts & Accessories

1Y6C2-300FA

( )

FT50JET/FT60GET
PARTS CATALOGUE
©2024 by Yamaha Motor Co., Ltd.
1st edition, May 2024
All rights reserved.
Any reprinting or unauthorized use
without the written permission of
Yamaha Motor Co., Ltd.
is expressly prohibited.
Printed in Japan.

FT50JET/FT60GET
CATALOGUE DE PIECES DETACHEES
©2024 par Yamaha Motor Co., Ltd.
1re édition, mai 2024
Tous droits réservés
Toute réimpression ou utilisation
non autorisée sans la permission écrite
de Yamaha Motor Co., Ltd.
est formellement interdite.
Imprimé au Japon

FOREWORD

This Parts Catalogue is related to the parts for the model(s) on the cover page. When you are ordering replacement parts, please refer to this Parts Catalogue and quote both part numbers and part names correctly.

1. Modifications or additions which have been made after the issue of the Parts Catalogue will be announced in the Parts News.
   It is advisable that you make the necessary corrections to the Parts Catalogue according to the Parts News.

2. Abbreviations
   The following abbreviations are used in this Parts Catalogue.
   "UR" Use specified parts number.
   "UN" Use as many as needed.
   "AP" Alternate Parts
   "LM" Locally Made (Parts need to be ordered locally)
   "F#" Frame No. (Applicable machine No.)
   "O/S" Over Size

3. The number of components for assembly
   - Parts, which are to be supplied in an assembly, are listed with a dot (.) in front of the part name as shown below.
   - The numeral appearing to the right of each component part indicates the quantity of parts for each assembly unit.

PART NO.	DESCRIPTION	Q'TY	REMARKS
2F5–83310–60	FRONT FLASHER LIGHT ASSY	2	
115–83311–60	.BULB (6V–18W)	1	

4. Applicable colours of graphics are represented in the "REMARKS" as shown below.

PART NO.	DESCRIPTION	Q'TY	REMARKS
2N4–24110–00–X5	FUEL TANK COMP.	2	MXR
3J1–24240–10	.GRAPHIC, FUEL TANK	1	FOR MXR

5. Note that the illustrations for reference in finding parts numbers are not to be used for assembling. When assembling, please use the applicable service manual.

6. The asterisk (*) before a reference number indicates modified items after the first edition.

7. Applicable Serial No.
   Engine Serial No.

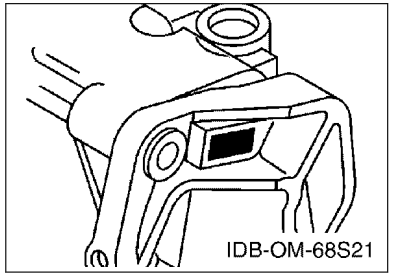

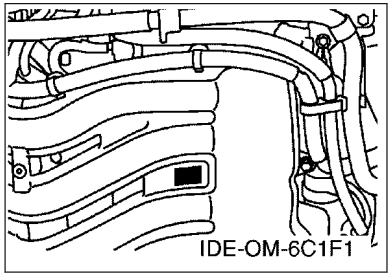

8. Applicable Engine Starting Serial No.

Model	Serial No.	Model	Serial No.
FT50J	6C2-1035264	FT60G	6C6-1048223

9. Applicable Colour Code

Abbreviation	Colour Name	Colour Code
DBN1	DARK BLUISH GRAY 1	008D

10. Quantity Column Information

Column No.	Name Of Q'ty Column	Applicable Model
1	6C2M	FT50JET
2	6C6M	FT60GET

AVANT–PROPOS

Ce catalogue de pièces détachées concerne les pièces pour le(s) modèle(s) indiqué(s) sur la page de couverture. Lorsque vous commandez des pièces de rechange, veuillez vous référer à ce catalogue de pieces détachées et indiquer clairement les numéros et les noms des pièces détachées.

1. Les modifications ou ajouts ayant été effectués après la parution du catalogue de pièces détachées seront décrits dans les Bulletins d'information concernant les pièces détachées.
   Il est recommandé que vous apportiez les corrections nécessaires au catalogue des pièces détachées en vous référant aux Bulletins d'information.

2. Abréviations
   Dans ce catalogue, les abréviations suivantes sont utilisées:
   "UR" Utiliser le numéro de pièces spécifié.
   "UN" Utiliser autant que nécessaire.
   "AP" Pièces de substitution
   "LM" Fabrication locale (les pièces doivent être commandées localement.)
   "F#" N° de cadre (applicable au N° de série)
   "O/S" Surdimensionné

3. Nombre de pièces d'un assemblage
   - Les pièces fournies comme composants d'un assemblage sont précédées d'un point (.) de la manière indiquée ci–dessous.
   - Le chiffre apparaissant à la droite de chaque composant indique la quantité de pièces pour chaque unité d'assemblage.

N° PIECES	DESCRIPTION	QTE	REMARQUES
2F5–83310–60	ENS. CLIGNOTANT AVANT	2	
115–83311–60	.AMPOULE (6V–18W)	1	

4. Les couleurs concernant les graphiques sont indiquées dans la colonne "REMARQUES", comme indiqué ci–dessous.

N° PIECES	DESCRIPTION	QTE	REMARQUES
2N4–24110–00–X5	RESERVOIR A ESSENCE.	2	MXR
3J1–24240–10	.GRAPHIQUE	1	POUR MXR

5. Veuillez noter que les illustrations sont indiquées à titre de référence pour trouver les numéros de pièces, non pour être utilisées lors de l'assemblage. Lors de l'assemblage, veuillez utiliser le manuel d'entretien adéquat.

6. L'astérisque (*) placé devant un numéro de référence indique des éléments qui ont été modifiés après la première édition.

7. N° de série applicable
   N° de Série du moteur

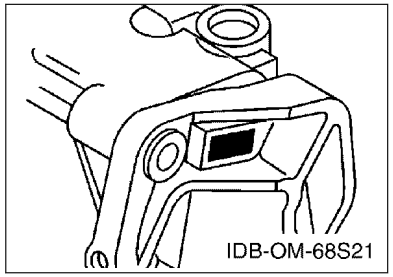

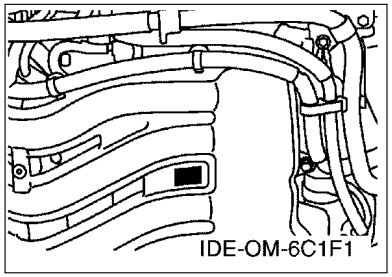

8. N° de série initial du moteur applicable

Modèle	N° de série	Modèle	N° de série
FT50J	6C2-1035264	FT60G	6C6-1048223

9. Code couleur applicable

Abréviation	Nom de la couleur	Code couleur
DBN1	DARK BLUISH GRAY 1	008D

10. Informations relatives à la colonne Quantité

N° de la colonne	Nom de la colonne Qté	Modèle applicable
1	6C2M	FT50JET
2	6C6M	FT60GET

CONTENTS

SCHEDULED SERVICE PARTS.....1
TOP COWLING.....2
CYLINDER & CRANKCASE 1.....3
CRANKSHAFT & PISTON.....5
CYLINDER & CRANKCASE 2.....6
VALVE.....8
INTAKE 1.....9
INTAKE 2.....10
FUEL INJECTION PUMP 1.....11
FUEL INJECTION PUMP 2.....12
OIL PUMP.....13
FUEL.....14
GENERATOR.....16
ELECTRICAL 1.....17
ELECTRICAL 2.....18
ELECTRICAL 3.....20
ELECTRICAL 4.....22
STARTING MOTOR.....23
BOTTOM COWLING 1.....24
BOTTOM COWLING 2.....26
CONTROL.....27
BRACKET 1.....29
BRACKET 2.....31
POWER TRIM & TILT ASSY 1.....33
POWER TRIM & TILT ASSY 2.....36
UPPER CASING.....37
OIL PAN.....39
LOWER CASING & DRIVE 1.....40
LOWER CASING & DRIVE 2.....43
FUEL TANK.....44
STEERING GUIDE.....45
OPTIONAL PARTS 1.....46
OPTIONAL PARTS 2.....47
REPAIR KIT 1.....48
REPAIR KIT 2.....49

INDEX

NUMERICAL INDEX.....51

TABLE DES MATIERES

PIECES MAINTENANCE PERIODIQUE.....1
CAPOT SUPERIEUR..... 2
CYLINDRE & CARTER 1..... 3
VILEBREQUIN & PISTON.....5
CYLINDRE & CARTER 2..... 6
SOUPAPE..... 8
ADMISSION 1.....9
ADMISSION 2.....10
POMPE A INJECTEUR 1..... 11
POMPE A INJECTEUR 2..... 12
POMPE A HUILE.....13
CARBURANT..... 14
GENERATRICE.....16
PARTIE ELECTRIQUE 1.....17
PARTIE ELECTRIQUE 2.....18
PARTIE ELECTRIQUE 3.....20
PARTIE ELECTRIQUE 4.....22
DEMARREUR ELECTRIQUE.....23
CAPOT INFERIEUR 1.....24
CAPOT INFERIEUR 2.....26
COMMANDE..... 27
SUPPORT 1..... 29
SUPPORT 2..... 31
PUISSANCE PARER ET INCLINER 1..... 33
PUISSANCE PARER ET INCLINER 2..... 36
FOURREAU.....37
VENTILATEUR D'HUILE..... 39
BOITIER D'HELICE TRANSMISSION1.....40
BOITIER D'HELICE TRANSMISSION2.....43
RESERVOIR A CARBURANT.....44
FIXATION DE DIRECTION..... 45
PIECES OPTIONNELLES 1.....46
PIECES OPTIONNELLES 2.....47
KITS DE REPARATION 1..... 48
KITS DE REPARATION 2..... 49

INDEX

INDEX NUMERIQUE.....51

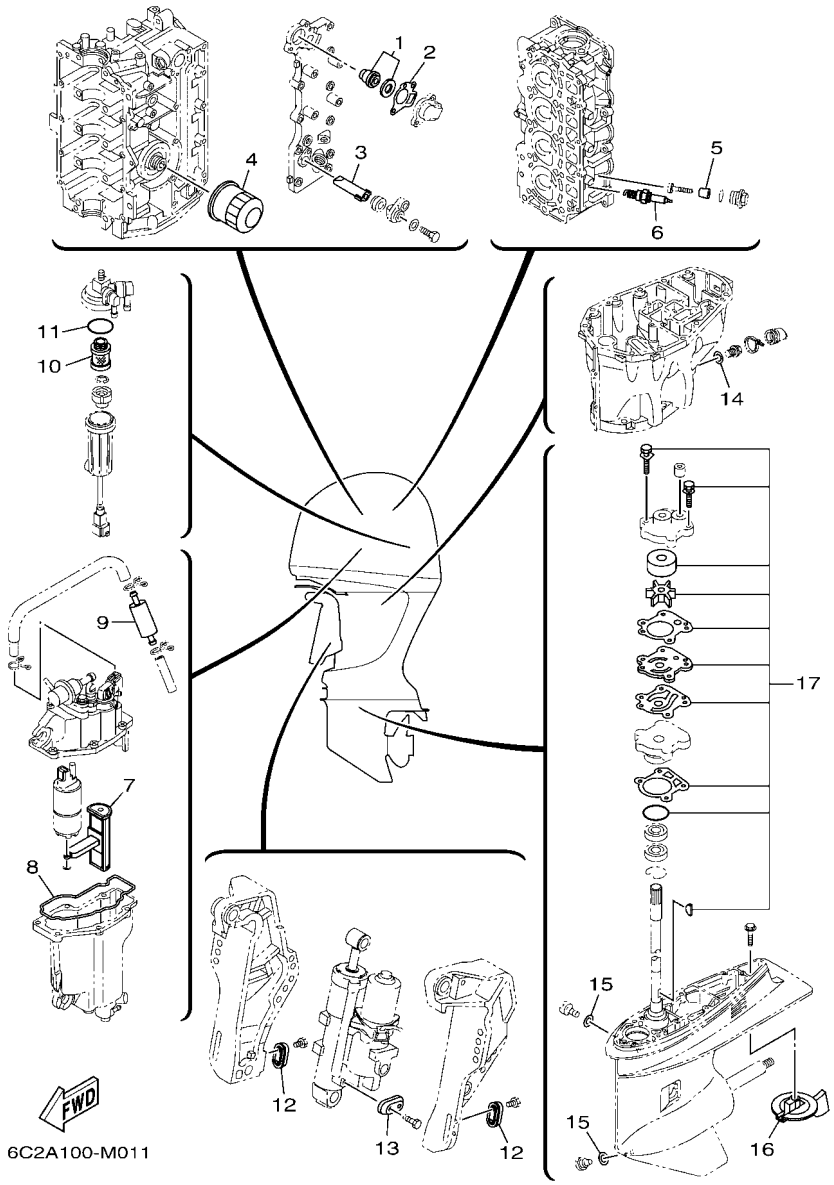

FIG. 1 SCHEDULED SERVICE PARTS — PIECES MAINTENANCE PERIODIQUE

REF. NO.	PART NO. N° PIECES	DESCRIPTION DESCRIPTION	6C2M	6C6M				REMARKS REMARQUES
1	6G8–12411–03	THERMOSTAT THERMOSTAT	1	1				
2	62Y–12414–01	GASKET, COVER JOINT, COUVERCLE	1	1				
3	62Y–11325–00	ANODE ANODE	1	1				
4	5GH–13440–80	ELEMENT ASSY, OIL CLEANER ELEMENT, FILTRE A HUILE	1	1				
5	6G8–11325–00	ANODE ANODE	4	4				
6	94702–00418	PLUG, SPARK (NGK DPR6EB-9) BOUGIE D,ALLUMAGE (NGK DPR6EB-	4	4				
7	6C5–13915–00	FILTER FILTRE	1	1				
8	6C5–14984–10	GASKET, FLOAT CHAMBER JOINT, CUVE DE FLOTTEUR	1	1				
9	6C5–24251–01	STRAINER 1 FILTRE 1	1	1				
10	6D8–24563–00	ELEMENT, FILTER ELEMENT, FILTRE	1	1				
11	6D8–24564–00	GASKET JOINT	1	1				
12	65W–45251–00	ANODE ANODE	2	2				
13	65W–45251–00	ANODE ANODE	1	1				
14	90430–14M09	GASKET JOINT	1	1				
15	90430–08003	GASKET JOINT	2	2				
16	67F–45371–00	TAB-TRIM ANODE DERIVE	1	1				
17	6H3–W0078–02	WATER PUMP REPAIR KIT KIT DE REPARATION DE LA POMPE	1	1				

FIG. 2 TOP COWLING — CAPOT SUPERIEUR

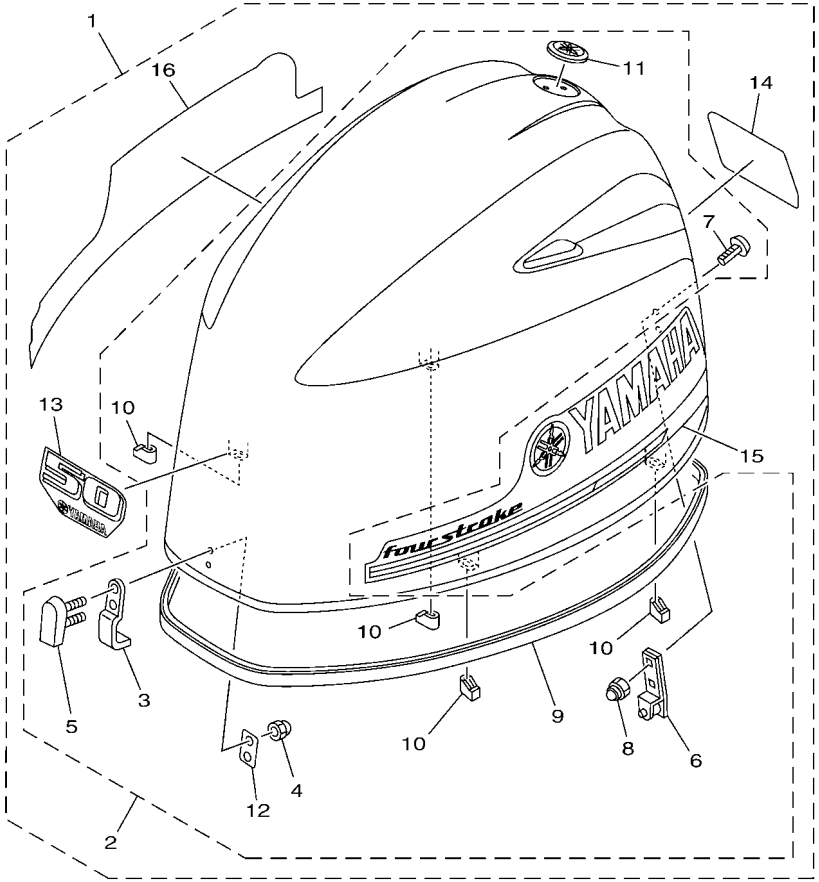

6C2E100-R020

REF. NO.	PART NO. N° PIECES	DESCRIPTION DESCRIPTION	6C2M	6C6M				REMARKS REMARQUES
1	6C2–42610–31	TOP COWLING ASSY CAPOT (ENS.)	1					
	6C6–42610–31	TOP COWLING ASSY CAPOT (ENS.)		1				
2	6CJ–4261A–01	.TOP COWLING W/O GRAPHICS .CAPOT SUPERIEUR SANS GRAPHIQUE	1	1				
3	6BG–42651–00	..HOOK ..CROCHET	1	1				
4	95380–05800	..NUT ..ECROU	2	2				
5	6BG–42851–00	..COVER, CLAMP ..COUVERCLE, BRIDE	1	1				
6	6BG–42652–00	..HOOK ..CROCHET	1	1				
7	90109–06047	..BOLT ..BOULON	2	2				
8	90185–06M05	..NUT, SELF-LOCKING ..ECROU,AUTO-BLOQUANT	2	2				
9	6CJ–42615–00	..SEAL ..JOINT	1	1				
10	6BG–42662–01	..DAMPER ..AMORTISSEUR	4	4				
11	6AH–42697–10	..TUNING FORK MARK ..MARQUE, YAMAHA	1	1				
12	6BG–42649–00	..HOLDER, CLAMP BAND ..SUPPORT, SANDOW DE SERRAGE	1	1				
13	60A–42677–00	.GRAPHIC, FRONT .ADHESIF, AVANT	1					
	6C5–42677–10	.GRAPHIC, FRONT .ADHESIF, AVANT		1				
14	61S–42678–10	.GRAPHIC, REAR .ADHESIF, ARRIERE	1					
	6C6–42678–20	.GRAPHIC, REAR .ADHESIF, ARRIERE		1				
15	6CJ–42675–00	.GRAPHIC, SIDE 1 .EMBLEME	1	1				
16	6CJ–42676–00	.GRAPHIC, SIDE 2 .EMBLEME	1	1				

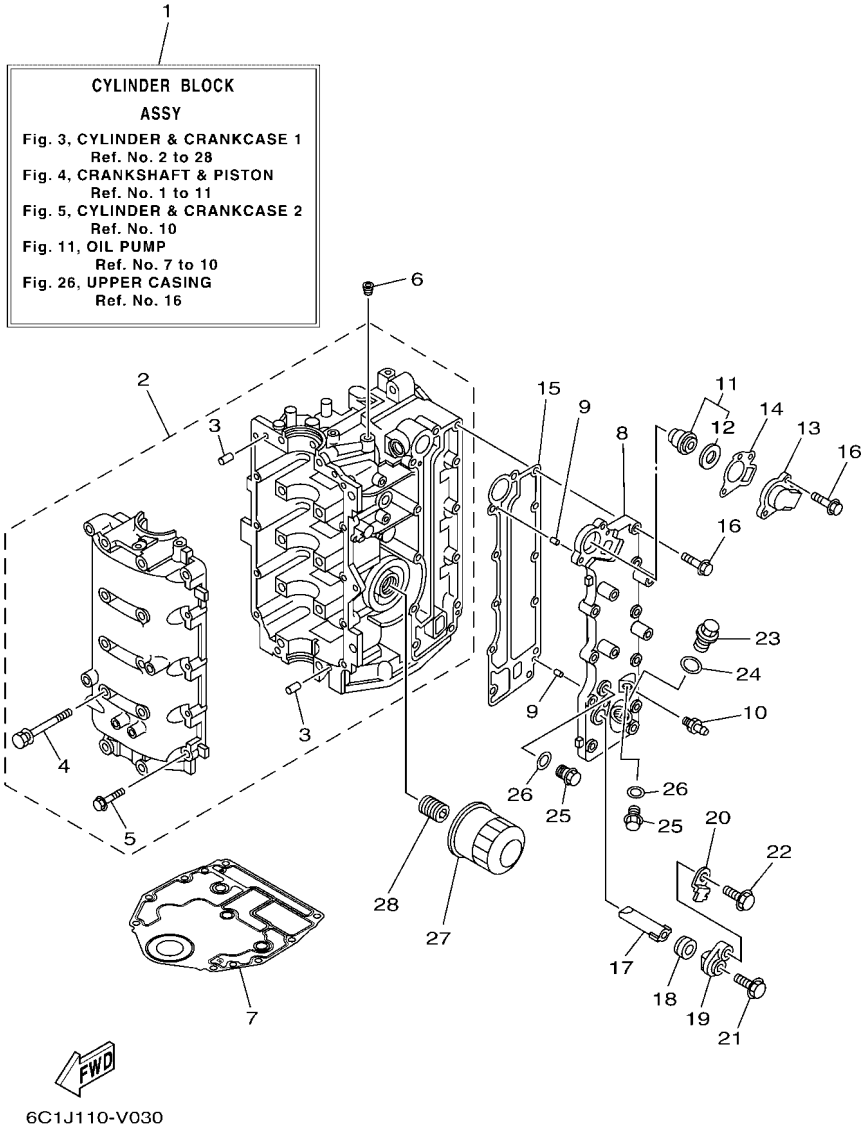

FIG. 3 CYLINDER & CRANKCASE 1 — CYLINDRE & CARTER 1

REF. NO.	PART NO. N° PIECES	DESCRIPTION DESCRIPTION	6C2M	6C6M				REMARKS REMARQUES
1	6C5–W009B–07–9S	CYLINDER BLOCK ASSY CYLINDRE GROUPE (ENS.)	1	1				
2	6C5–15100–12	CRANKCASE ASSY CARTER DE MOTEUR COMPLET	1	1				
3	93606–12019	.PIN, DOWEL .GOUPILLE	4	4				
4	90119–08154	.BOLT, WITH WASHER .BOULON, AVEC RONDELLE	10	10				
5	97513–06535	.BOLT, WITH WASHER .VIS HEXAGONAL AVC RONDELLE	10	10				
6	90344–51003	PLUG, TAPER SCREW PLOT, FILETE CONIQUE	1	1				
7	6BG–11351–02	GASKET, CYLINDER JOINT, D'EMBASE	1	1				
8	6C5–41113–11–9S	OUTER COVER, EXHAUST COUVERCLE, ECHAPPEMENT	1	1				
9	93604–10M03	PIN, DOWEL CLAVETTE	2	2				
10	62Y–12481–10	PIPE 1 DURITE 1	1	1				
11	6G8–12411–03	THERMOSTAT THERMOSTAT	1	1				
12	688–12412–00	.SEAL, THERMOSTAT .JOINT, THERMOSTAT	1	1				
13	6C5–12413–00–9S	COVER, THERMOSTAT COUVERCLE, THERMOSTAT	1	1				
14	62Y–12414–01	GASKET, COVER JOINT, COUVERCLE	1	1				
15	6C5–41114–10	GASKET, EXHAUST OUTER COVER JOINT, COUVERCLE D'ECHAPPEMENT	1	1				
16	90119–06MA5	BOLT, WITH WASHER BOULON, AVEC RONDELLE	12	12				
17	62Y–11325–00	ANODE ANODE	1	1				
18	66M–11328–01	GROMMET, ANODE PASSE-FIL	1	1				
19	66M–11327–00–94	COVER, ANODE COUVERCLE ANODE	1	1				
20	66M–12535–00	PLATE PLAQUE	1	1				
21	97595–05512	BOLT, WITH WASHER VIS HEXAGONAL AVC RONDELLE	1	1				
22	97E95–06520	BOLT, HEXAGON W/W DEEP RECESS VIS HEXAGONAL AVC RONDELLE	1	1				
23	90340–18M09	PLUG, STRAIGHT SCREW PLOT, FILETE DROIT	1	1				
24	90201–186F1	WASHER, PLATE RONDELLE, PLATE	1	1				
25	90340–14M06	PLUG, STRAIGHT SCREW PLOT, FILETE DROIT	2	2				
26	90430–14115	GASKET JOINT	2	2				
27	5GH–13440–80	ELEMENT ASSY, OIL CLEANER ELEMENT, FILTRE A HUILE	1	1				

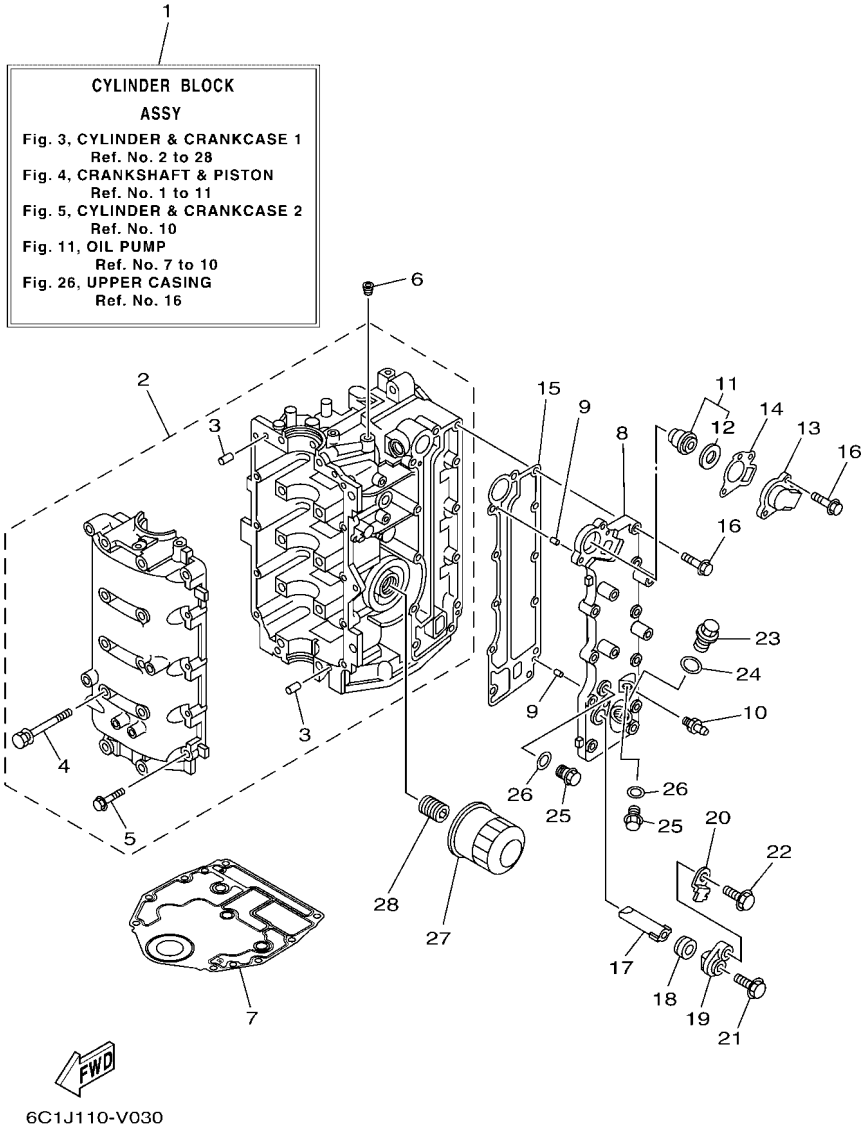

FIG. 3 CYLINDER & CRANKCASE 1 — CYLINDRE & CARTER 1

REF. NO.	PART NO. N° PIECES	DESCRIPTION DESCRIPTION	6C2M	6C6M				REMARKS REMARQUES
28	6C5–12858–A0	BOLT, UNION BOULON, RACCORD	1	1				

FIG. 4 CRANKSHAFT & PISTON — VILEBREQUIN & PISTON

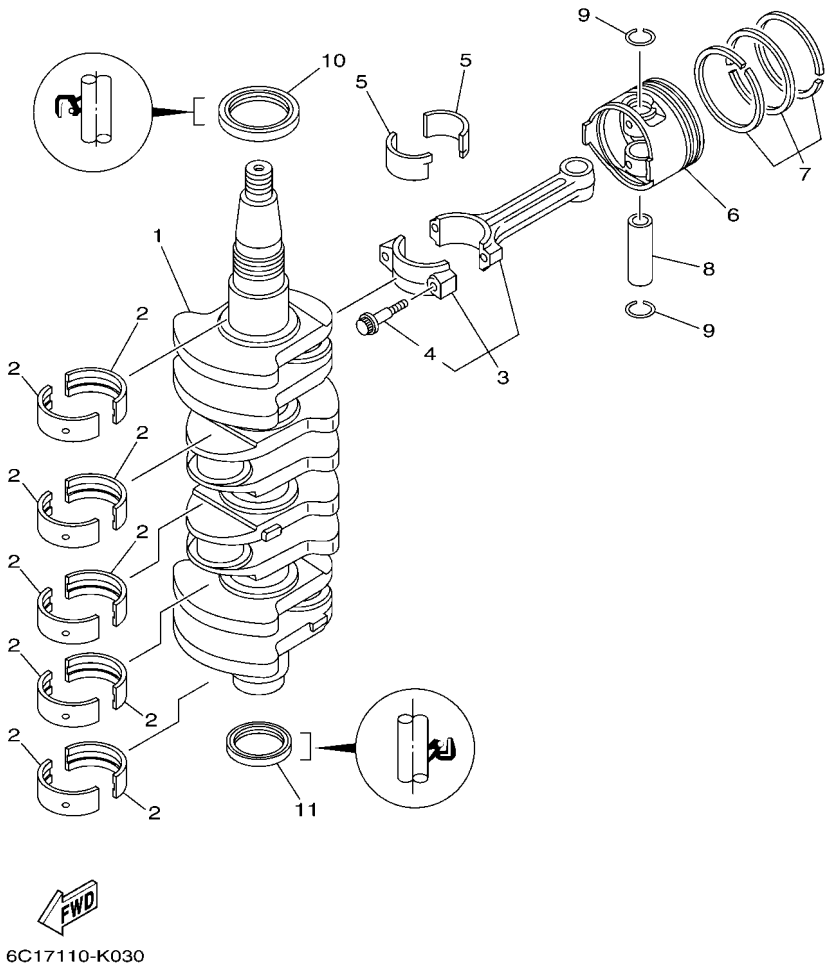

REF. NO.	PART NO. N° PIECES	DESCRIPTION DESCRIPTION	6C2M	6C6M				REMARKS REMARQUES
1	6C5–11411–10	CRANKSHAFT VILEBREQUIN COMPLET	1	1				
2	6BG–11416–00	PLANE BEARING, CRANKSHAFT 1 COUSSINET DE VILEBREQUIN 1	10	10				UR YELLOW UR YELLOW
	6BG–11416–10	PLANE BEARING, CRANKSHAFT 1 COUSSINET DE VILEBREQUIN 1	10	10				UR RED UR RED
	6BG–11416–20	PLANE BEARING, CRANKSHAFT 1 COUSSINET DE VILEBREQUIN 1	10	10				UR PINK UR PINK
	6BG–11416–30	PLANE BEARING, CRANKSHAFT 1 COUSSINET DE VILEBREQUIN 1	10	10				UR GREEN UR GREEN
3	6C5–11650–10	CONNECTING ROD ASSY BIELLE COMPLETTE	4	4				
4	6C5–11654–00	.BOLT, CONNECTING ROD .BOULON, BIELLE	2	2				
5	6CJ–11656–00	PLANE BEARING, CONNECTING ROD ROULEMENT DE BIELLE	8	8				UR YELLOW UR YELLOW
	6CJ–11656–10	PLANE BEARING, CONNECTING ROD ROULEMENT DE BIELLE	8	8				UR RED UR RED
	6CJ–11656–20	PLANE BEARING, CONNECTING ROD ROULEMENT DE BIELLE	8	8				UR PINK UR PINK
	6CJ–11656–30	PLANE BEARING, CONNECTING ROD ROULEMENT DE BIELLE	8	8				UR GREEN UR GREEN
6	69W–11631–01–97	PISTON (STD) PISTON (STD)	4	4				
	69W–11635–01	PISTON (0.25MM O/S) PISTON (0.25MM O/S)	4	4				AP AP
	69W–11636–01	PISTON (0.50MM O/S) PISTON (0.50MM O/S)	4	4				AP AP
7	67C–11603–01	PISTON RING SET (STD) JEU DE SEGMENTS (STD)	4	4				
	67C–11604–01	PISTON RING SET (0.25MM O/S) JEU DE SEGMENTS (0.25MM O/S)	4	4				AP AP
	67C–11605–01	PISTON RING SET (0.50MM O/S) JEU DE SEGMENTS (0.50MM O/S)	4	4				AP AP
8	62Y–11633–00	PIN, PISTON AXE, PISTON	4	4				
9	93450–17129	CIRCLIP CIRCLIP	8	8				
10	93102–43M42	OIL SEAL JOINT SPY	1	1				
11	93101–35002	OIL SEAL JOINT SPY	1	1				

FIG. 5 CYLINDER & CRANKCASE 2 — CYLINDRE & CARTER 2

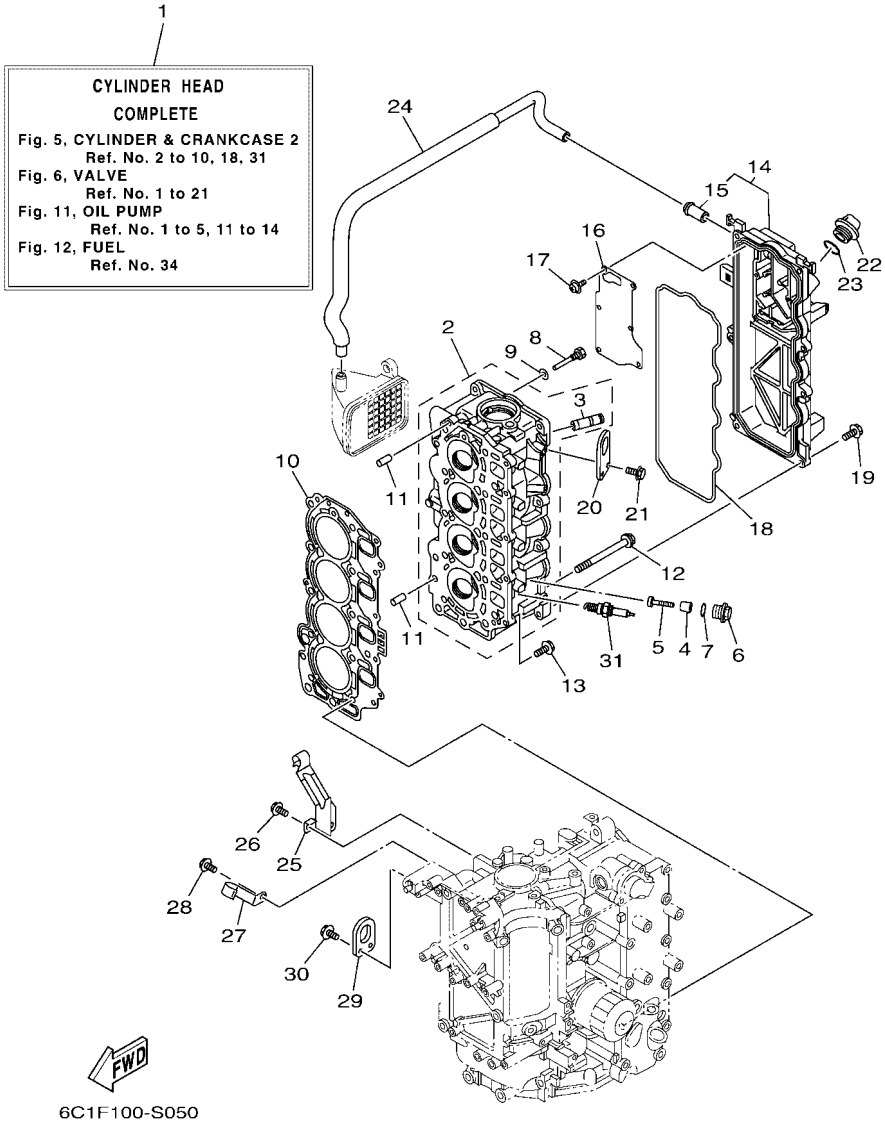

REF. NO.	PART NO. N° PIECES	DESCRIPTION DESCRIPTION	6C2M	6C6M				REMARKS REMARQUES
1	6C5–W009A–13–9S	CYLINDER HEAD COMPLETE CULASSE (ENS.)	1	1				
2	6C5–11111–20–9S	HEAD, CYLINDER 1 CULASSE, 1	1	1				
3	62Y–11133–31	.GUIDE, VALVE 1 .GUIDE, SOUPAPE 1	8	8				
4	6G8–11325–00	ANODE ANODE	4	4				
5	98980–05025	SCREW, BIND VIS, DE PRESSION	4	4				
6	6G8–11197–A0	PLUG, BLIND PLOT, BORGNE	4	4				
7	93210–13M63	O-RING JOINT TORIQUE	4	4				
8	90109–06M65	BOLT BOULON	1	1				
9	90430–06014	GASKET JOINT	1	1				
10	6C5–11181–01	GASKET, CYLINDER HEAD 1 JOINT, DE CULASSE 1	1	1				
11	99530–08012	PIN, DOWEL GOUJON, D'ASSEMBLAGE	2	2				
12	90105–09009	BOLT, FLANGE BOULON, A COLLERETTE	10	10				
13	90119–06MA3	BOLT, WITH WASHER BOULON, AVEC RONDELLE	5	5				
14	6C5–11191–02–9S	COVER, CYLINDER HEAD 1 COUVERCLE, CULASSE 1	1	1				
15	62Y–14485–00	.PIPE, JOINT .DURITE	1	1				
16	6C5–11168–00	COVER, BREATHER COUVERCLE, RENIFLARD	1	1				
17	97607–04210	SCREW, WITH WASHER VIS, AVEC RONDELLE	6	6				
18	62Y–11356–00	SEAL, CYLINDER 2 JOINT, SPY CYLINDRE	1	1				
19	97E95–06520	BOLT, HEXAGON W/W DEEP RECESS VIS HEXAGONAL AVC RONDELLE	7	7				
20	6CJ–11119–00	HANGER, ENGINE ANNEAU, LEVAGE	1	1				
21	97E95–06520	BOLT, HEXAGON W/W DEEP RECESS VIS HEXAGONAL AVC RONDELLE	2	2				
22	6G8–15363–00	PLUG, OIL PLOT, HUILE	1	1				
23	93210–24M79	O-RING JOINT TORIQUE	1	1				
24	6C5–1531A–10	HOSE, BREATHER 1 DURITE DE RENIFLARD 1	1	1				
25	6C5–15378–00	HOLDER SUPPORT	1	1				
26	97E95–06514	BOLT, HEXAGON W/W DEEP RECESS VIS HEXAGONAL AVC RONDELLE	1	1				
27	6C5–15378–11	HOLDER SUPPORT	1	1				

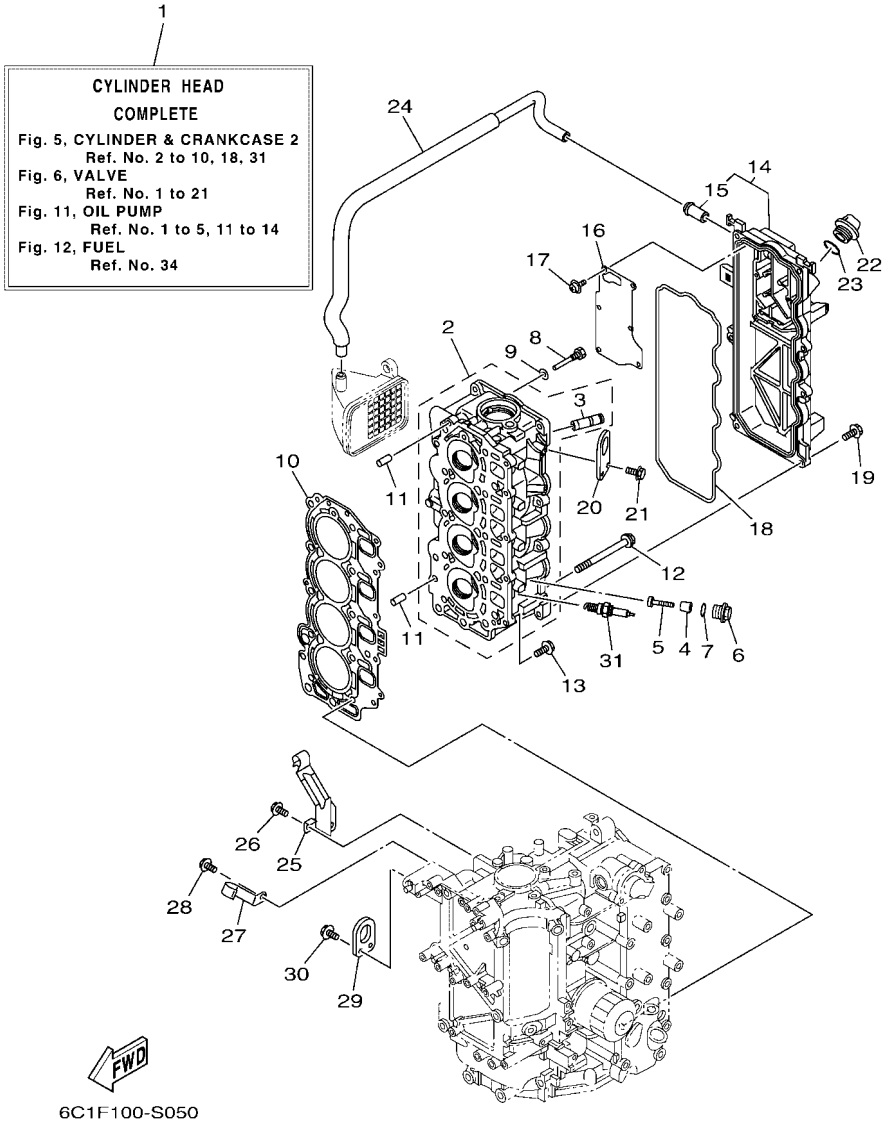

FIG. 5 CYLINDER & CRANKCASE 2 — CYLINDRE & CARTER 2

REF. NO.	PART NO. N° PIECES	DESCRIPTION DESCRIPTION	6C2M	6C6M				REMARKS REMARQUES
28	97E95–06514	BOLT, HEXAGON W/W DEEP RECESS VIS HEXAGONAL AVC RONDELLE	1	1				
29	62Y–11119–00	HANGER, ENGINE ANNEAU, LEVAGE	1	1				
30	97E95–06520	BOLT, HEXAGON W/W DEEP RECESS VIS HEXAGONAL AVC RONDELLE	2	2				
31	94702–00418	PLUG, SPARK (NGK DPR6EB-9) BOUGIE D,ALLUMAGE (NGK DPR6EB-	4	4				

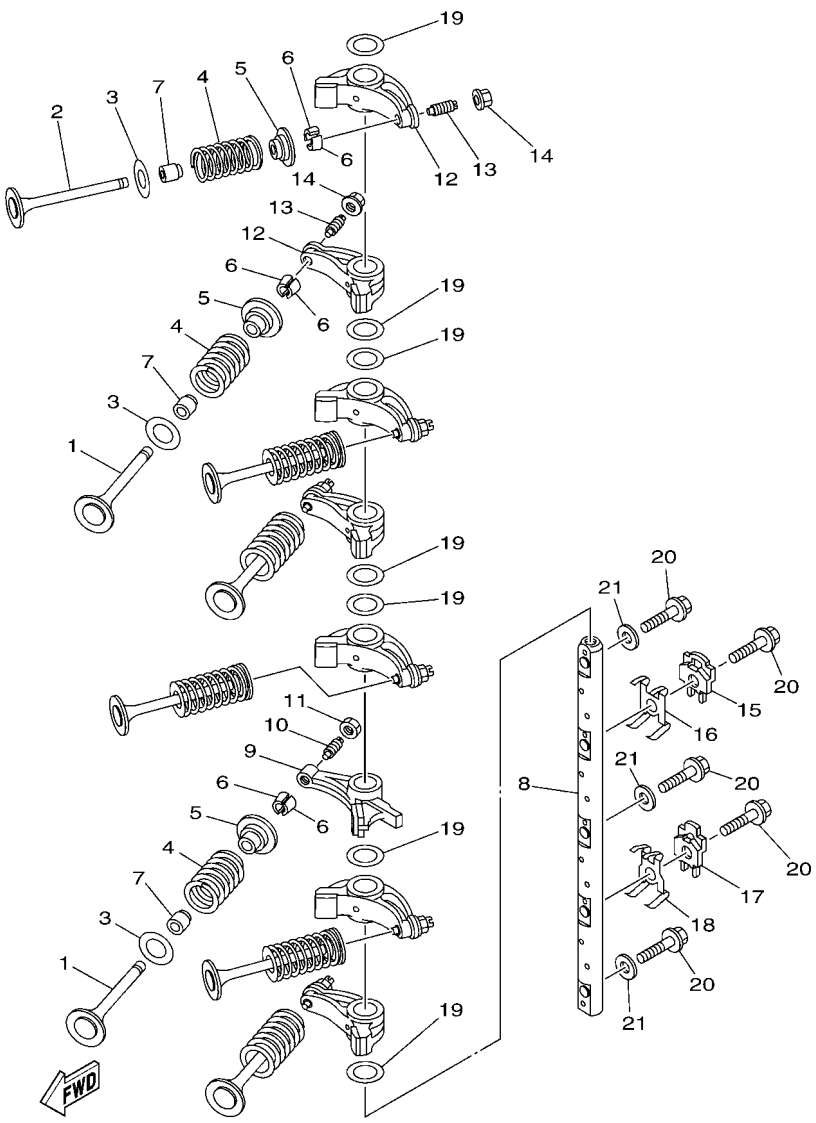

6C12100-E050

FIG. 6 VALVE SOUPAPE

REF. NO.	PART NO. N° PIECES	DESCRIPTION DESCRIPTION	6C2M	6C6M				REMARKS REMARQUES
1	69W–12111–00	VALVE, INTAKE SOUPAPE, ADMISSION	4	4				
2	69W–12121–10	VALVE, EXHAUST SOUPAPE, ECHAPPEMENT	4	4				
3	62Y–12116–00	SEAT, VALVE SPRING SIEGE, RESSORT DE SOUPAPE	8	8				
4	51Y–12114–00	SPRING, VALVE OUTER RESSORT DE SOUPAPE, EXTERNE	8	8				
5	30X–12117–00	RETAINER, VALVE SPRING BUTEE DE RESSORT DE SOUPAPE	8	8				
6	30X–12118–00	LOCK, VALVE SPRING RETAINER FRAISE, SOUPAPE	16	16				
7	51Y–12119–00	SEAL, VALVE STEM JOINT, QUEUE DE SOUPAPE	8	8				
8	6C5–12146–00	SHAFT, ROCKER AXE, CULBUTEUR	1	1				
9	62Y–12151–00	ARM, VALVE ROCKER CULBUTEUR	1	1				
10	64J–12159–00	SCREW, VALVE ADJUSTING VIS, REGLAGE DE SOUPAPE	1	1				
11	62Y–12158–00	NUT, LOCK CONTRE-ECROU	1	1				
12	6C5–12151–00	ARM, VALVE ROCKER CULBUTEUR	7	7				
13	6C5–12159–00	SCREW, VALVE ADJUSTING VIS, REGLAGE DE SOUPAPE	7	7				
14	6C5–12158–00	NUT, LOCK CONTRE-ECROU	7	7				
15	6C5–12231–00	GUIDE, STOPPER 1 GUIDE, BUTEE 1	1	1				
16	6C5–12233–00	PLATE, GUIDE STOPPER 1 PLAQUE, GUIDE BUTEE 1	1	1				
17	6C5–12241–00	GUIDE, STOPPER 2 GUIDE, BUTEE 2	1	1				
18	6C5–12243–00	PLATE, GUIDE STOPPER 2 PLAQUE, GUIDE BUTEE 2	1	1				
19	90201–16014	WASHER, PLATE RONDELLE, PLATE	7	7				
20	90105–08060	BOLT, FLANGE BOULON, A COLLERETTE	5	5				
21	92990–08200	WASHER, PLAIN RONDELLE, PLATE	3	3				

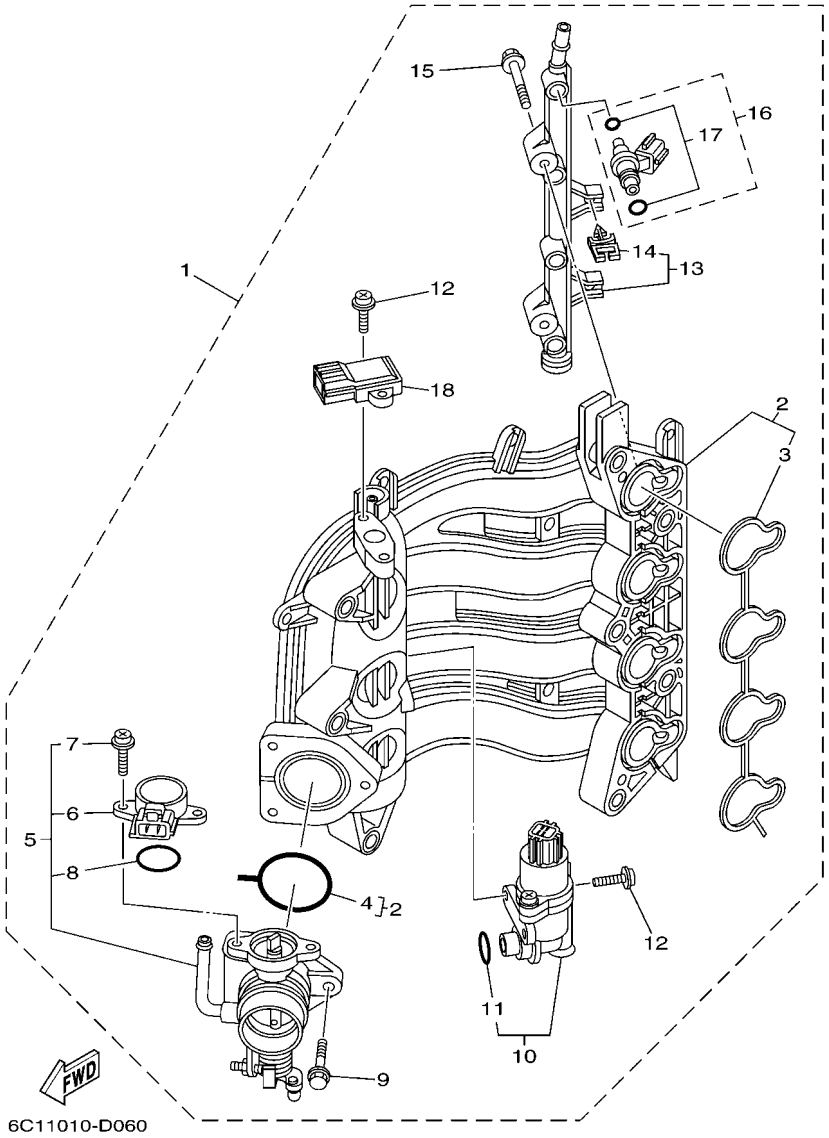

FIG. 7 INTAKE 1 — ADMISSION 1

REF. NO.	PART NO. N° PIECES	DESCRIPTION DESCRIPTION	6C2M	6C6M				REMARKS REMARQUES
1	6C5–14200–03	INTAKE ASSY ADMISSION (ENS.)	1	1				
2	6C5–13641–01	.MANIFOLD, INTAKE 1 .TUBULURE, ADMISSION 1	1	1				
3	6C5–13645–00	..GASKET, MANIFOLD 1 ..JOINT, TUBULURE 1	1	1				
4	6C5–13557–00	..GASKET ..JOINT	1	1				
5	6C5–13750–00	.THROTTLE BODY ASSY .CARTER D'ACCELERATEUR COMPLET	1	1				
6	6C5–85885–00	..THROTTLE SENSOR ASSY ..SENSITOMETRE (ENS.)	1	1				
7	6C5–81145–00	..SCREW 1 ..VIS 1	2	2				
8	6C5–8182L–00	..O-RING 1 ..JOINT TORIQUE 1	1	1				
9	6C5–14496–00	.BOLT .BOULON	3	3				
10	6C5–13105–03	.CONTROL VALVE ASSY .SOUPAPE DE CONTROLE COMPLET	1	1				
11	6C5–1319C–00	..O-RING ..JOINT TORIQUE	1	1				
12	6C5–81146–10	.SCREW 2 .VIS 2	4	4				
13	6C5–13161–00	.PIPE, DELIVERY 1 .DURITE REFOULEMENT 1	1	1				
14	90464–07M56	..CLAMP ..BRIDE	2	2				
15	6C5–14446–00	.BOLT .BOULON	2	2				
16	6C5–13761–00	.INJECTOR .INJECTEUR	4	4				
17	6C5–1410B–00	..PACKING KIT ..POCHETTE DE JOINTS	1	1				
18	68F–83688–00	.SENSOR ASSY .SONDE (ENS.)	1	1				

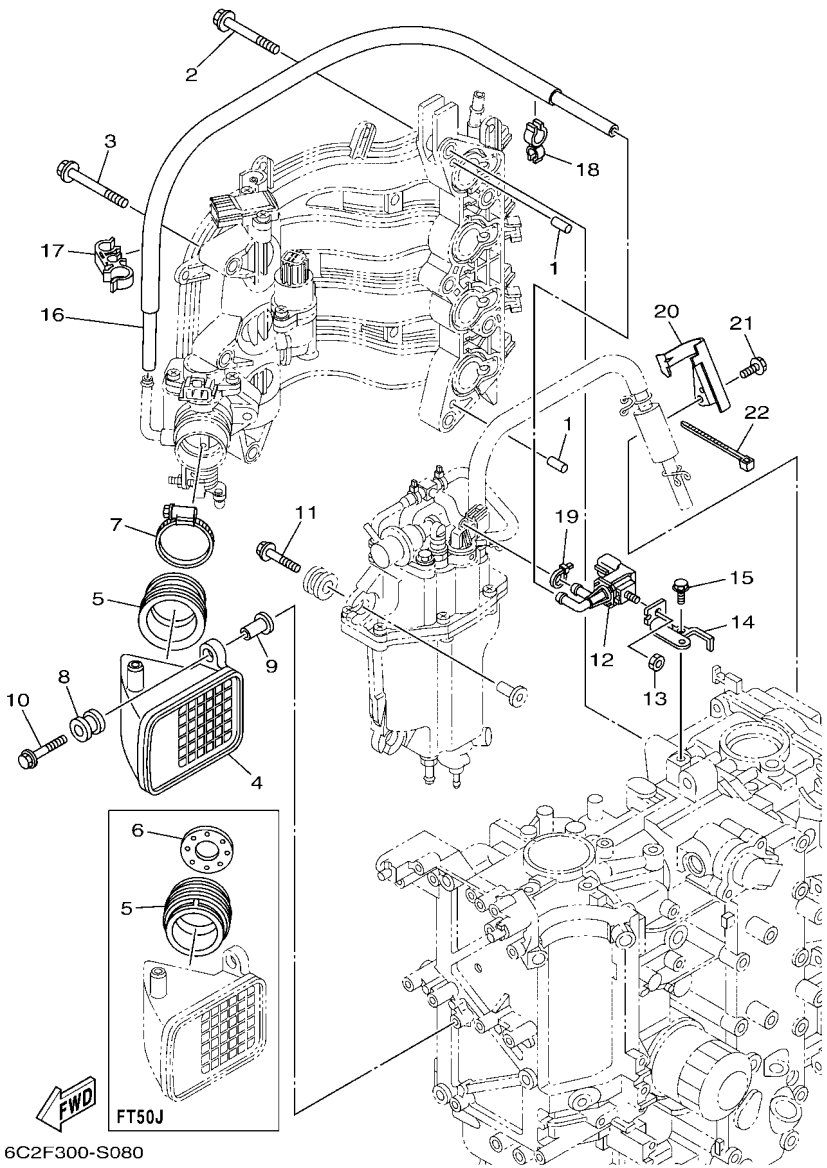

6C2F300-S080

FIG. 8 INTAKE 2 — ADMISSION 2

REF. NO.	PART NO. N° PIECES	DESCRIPTION DESCRIPTION	6C2M	6C6M				REMARKS REMARQUES
1	93608–12M05	PIN, DOWEL AXE	2	2				
2	90119–08190	BOLT, WITH WASHER BOULON, AVEC RONDELLE	5	5				
3	90119–06304	BOLT, WITH WASHER BOULON, AVEC RONDELLE	3	3				
4	6C5–14440–10	SILENCER ASSY, INTAKE SIENCIEUX D'ADMISSION	1	1				
5	6C1–14453–02	JOINT, AIR CLEANER 1 RACCORD, FILTRE A AIR 1	1					
	6C5–14453–02	JOINT, AIR CLEANER 1 RACCORD, FILTRE A AIR 1		1				
6	6C1–14477–00	PLATE PLAQUE	1					
7	90450–50001	HOSE CLAMP ASSY BRIDE, DE DURITE	1	1				
8	6A0–82317–01	DAMPER, IGNITION COIL AMORTISSEUR, BOBINE D'ALLUM	2	2				
9	90387–06119	COLLAR COLLERETTE	2	2				
10	90119–06297	BOLT, WITH WASHER BOULON, AVEC RONDELLE	2	2				
11	90119–06291	BOLT, WITH WASHER BOULON, AVEC RONDELLE	3	3				
12	6C5–86120–00	SOLENOID VALVE ASSY SOLENOIDE	1	1				
13	95380–06600	NUT, HEXAGON ECROU	1	1				
14	6BG–86112–10	STAY, SOLENOID SUPPORT, SOLENOIDE	1	1				
15	97E95–06516	BOLT, HEXAGON W/W DEEP RECESS VIS HEXAGONAL AVC RONDELLE	1	1				
16	6C5–12576–00	HOSE 1 TUYAU 1	1	1				
17	90464–15008	CLAMP BRIDE	1	1				
18	90464–12006	CLAMP BRIDE	1	1				
19	90465–11M10	CLAMP BRIDE	1	1				
20	6C5–13428–01	BRACKET, STRAINER 1 SUPPORT, FILTRE 1	1	1				
21	97E95–06516	BOLT, HEXAGON W/W DEEP RECESS VIS HEXAGONAL AVC RONDELLE	1	1				
22	90465–13M18	CLAMP BRIDE	1	1				

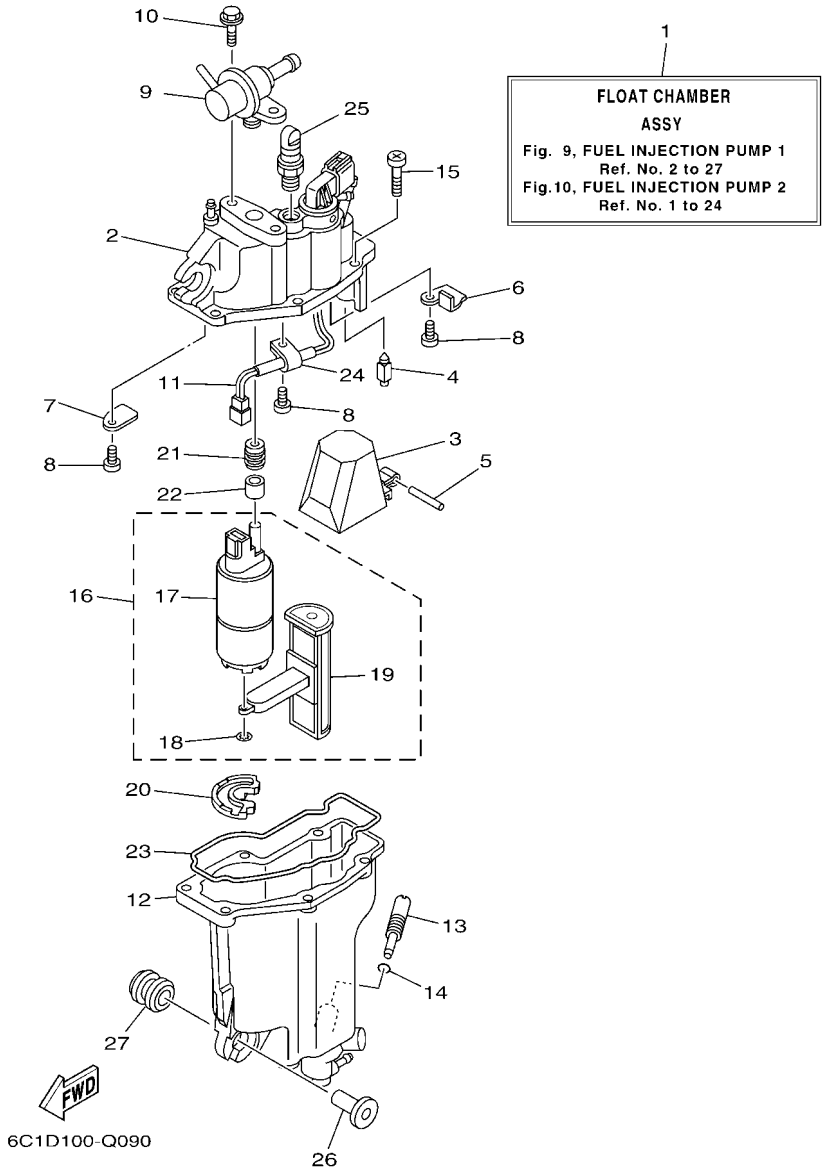

FIG. 9 FUEL INJECTION PUMP 1 POMPE A INJECTEUR 1

REF. NO.	PART NO. N° PIECES	DESCRIPTION DESCRIPTION	6C2M	6C6M				REMARKS REMARQUES
1	6C5–14180–04	FLOAT CHAMBER ASSY CUVE DE FLOTTEUR	1	1				
2	6C5–14182–20	COVER, FLOAT CHAMBER COUVERCLE, CUVE DE FLOTTEUR	1	1				
3	6C5–14985–00	FLOAT FLOTTEUR	1	1				
4	6C5–14546–10	VALVE, NEEDLE POINTEAU	1	1				
5	6C5–14386–00	PIN, FLOAT AXE, FLOTTEUR	1	1				
6	6C5–2441R–10	PLATE, BAFFLE 1 SEPARATEUR 1	1	1				
7	6C5–2441T–10	PLATE, BAFFLE 2 SEPARATEUR 2	1	1				
8	6C5–24453–00	SCREW VIS	3	3				
9	6C5–13906–02	REGULATOR, PRESSURE REGULATEUR DE PRESSION	1	1				
10	6C5–24592–00	BOLT BOLTE	2	2				
11	6C5–87226–00	WIRE HARNESS ASSY ENS. FAISCEAU ELECTRIQUE	1	1				
12	6C5–14960–20	BODY ASSY CARTER (ENS.)	1	1				
13	6C5–14191–00	PLUG, DRAIN PLOT, VIDANGE	1	1				
14	6C5–14397–00	O-RING JOINT TORIQUE	1	1				
15	6C5–14567–00	SCREW VIS	6	6				
16	6C5–13910–10	FUEL PUMP ASSY POMPE A ESSENCE COMPLET	1	1				
17	6C5–13907–00	.FUEL PUMP COMP. .POMPE A CARBURANT COMP.	1	1				
18	6C5–14127–10	.CLIP .JONC	1	1				
19	6C5–13915–00	.FILTER .FILTRE	1	1				
20	6C5–13593–01	DAMPER AMORTISSEUR	1	1				
21	6C5–13781–00	DAMPER, PUMP AMORTISSEUR, POMPE	1	1				
22	6C5–13716–00	COLLAR COLLERETTE	1	1				
23	6C5–14984–10	GASKET, FLOAT CHAMBER JOINT, CUVE DE FLOTTEUR	1	1				
24	6C5–21337–10	CLAMP, CABLE COLLIER, CABLE	1	1				
25	6C5–14225–00	CAP COUVERCLE	1	1				
26	90387–06M69	COLLAR COLLERETTE	3	3				
27	90480–09M12	GROMMET PASSE-FIL	3	3				

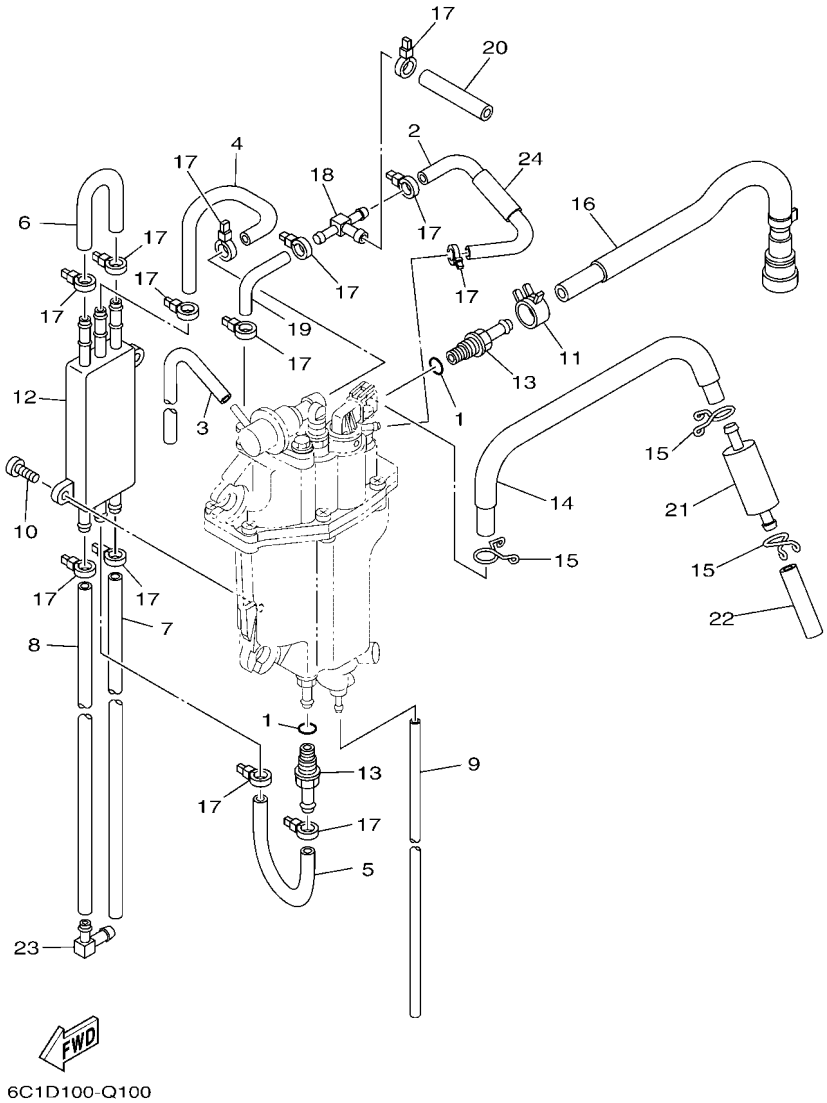

FIG. 10 FUEL INJECTION PUMP 2 — POMPE A INJECTEUR 2

REF. NO.	PART NO. N° PIECES	DESCRIPTION DESCRIPTION	6C2M	6C6M				REMARKS REMARQUES
1	6C5–13739–00	O-RING JOINT TORIQUE	2	2				
2	6C5–13546–00	HOSE 2 DURITE 2	1	1				
3	6C5–13542–00	HOSE, VACUUM SENSING 1 DURITE, SOUS VIDE DETECTION 1	1	1				
4	6C5–24321–00	PIPE 10 DURITE 10	1	1				
5	6C5–24322–00	PIPE 11 DURITE 11	1	1				
6	6BG–24323–00	PIPE 12 DURITE 12	1	1				
7	6CJ–24324–00	PIPE 13 DURITE 13	1	1				
8	6CJ–24325–00	PIPE 14 DURITE 14	1	1				
9	6BG–14149–00	PIPE DURITE	1	1				
10	6C5–24444–00	SCREW VIS	2	2				
11	6C5–13577–00	CLIP AGRAFE	1	1				
12	6C5–21841–01	COOLER RADIATEUR	1	1				
13	6C5–14251–00	NIPPLE RACCORD	2	2				
14	6C5–14148–00	PIPE DURITE	1	1				
15	6C5–24387–00	CLIP SANDOW	3	3				
16	6C5–13974–00	PIPE, FUEL 4 TUBE 4, CARBURANT	1	1				
17	90465–11M10	CLAMP BRIDE	13	13				
18	6C5–24379–00	PIPE, JOINT 4 DURITE RACCORDEMENT 4	1	1				
19	6C5–13545–00	HOSE 1 DURITE 1	1	1				
20	6C5–13547–00	HOSE 3 DURITE 3	1	1				
21	6C5–24251–01	STRAINER 1 FILTRE 1	1	1				
22	6C5–2451B–00	HOSE, FUEL INLET DURITE	1	1				
23	6C5–1410F–00	NIPPLE, 1 RACCORD, 1	1	1				
24	6C5–13548–00	HOSE, AIR 4 DURITE, A AIR 4	1	1				

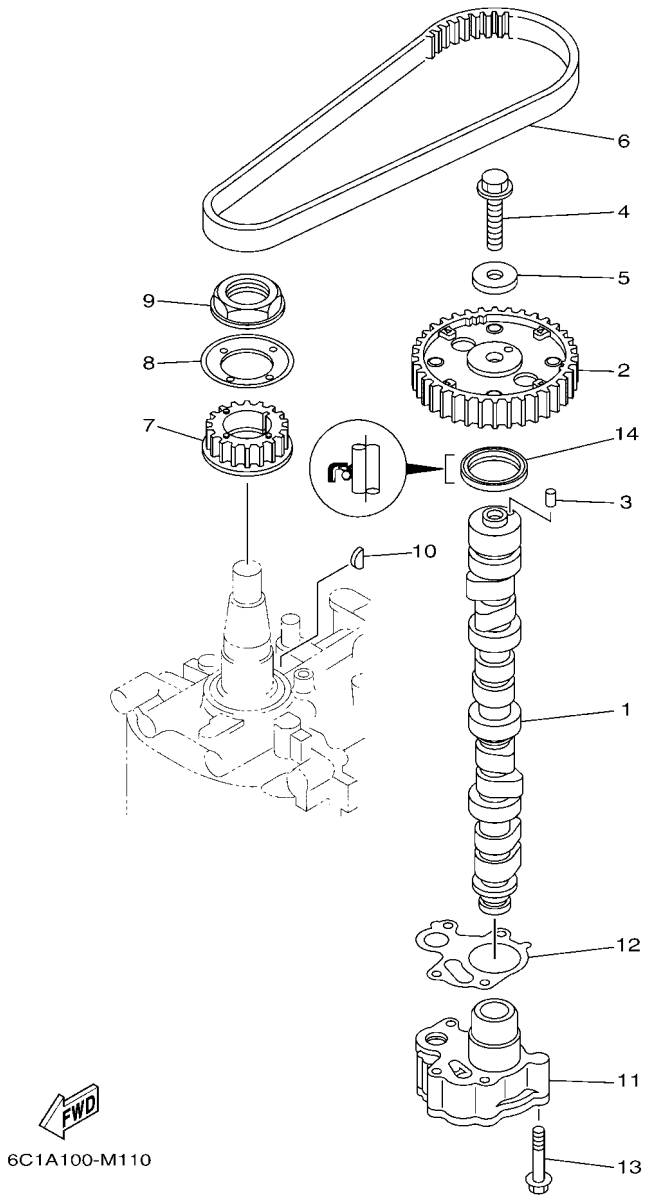

FIG. 11 OIL PUMP — POMPE A HUILE

REF. NO.	PART NO. N° PIECES	DESCRIPTION DESCRIPTION	6C2M	6C6M				REMARKS REMARQUES
1	6C5–12171–00	CAMSHAFT 1 ARBRE A CAMES 1	1	1				
2	6C5–11537–10	GEAR, DRIVEN PIGNON SECONDAIRE	1	1				
3	93605–17002	PIN, DOWEL AXE	1	1				
4	95817–10035	BOLT, FLANGE BOULON, A COLLERETTE	1	1				
5	90201–10144	WASHER, PLATE RONDELLE, PLATE	1	1				
6	6C5–46241–00	BELT COURROIE TRAPEZOIDALE	1	1				
7	6C5–11536–00	GEAR, DRIVE ENGRENAGE, MENANT	1	1				
8	62Y–11557–00	WASHER 1 RONDELLE 1	1	1				
9	90179–35001	NUT ECROU	1	1				
10	90280–03017	KEY, WOODRUFF CLAVETTE, DEMI-LUNE	1	1				
11	6C5–13300–01	OIL PUMP ASSY POMPE A HUILE COMPLETE	1	1				
12	6C5–13329–00	GASKET, PUMP COVER JOINT, COUVERCLE DE POMPE	1	1				
13	90119–06025	BOLT, WITH WASHER BOULON, AVEC RONDELLE	4	4				
14	93102–37M40	OIL SEAL JOINT SPY	1	1				

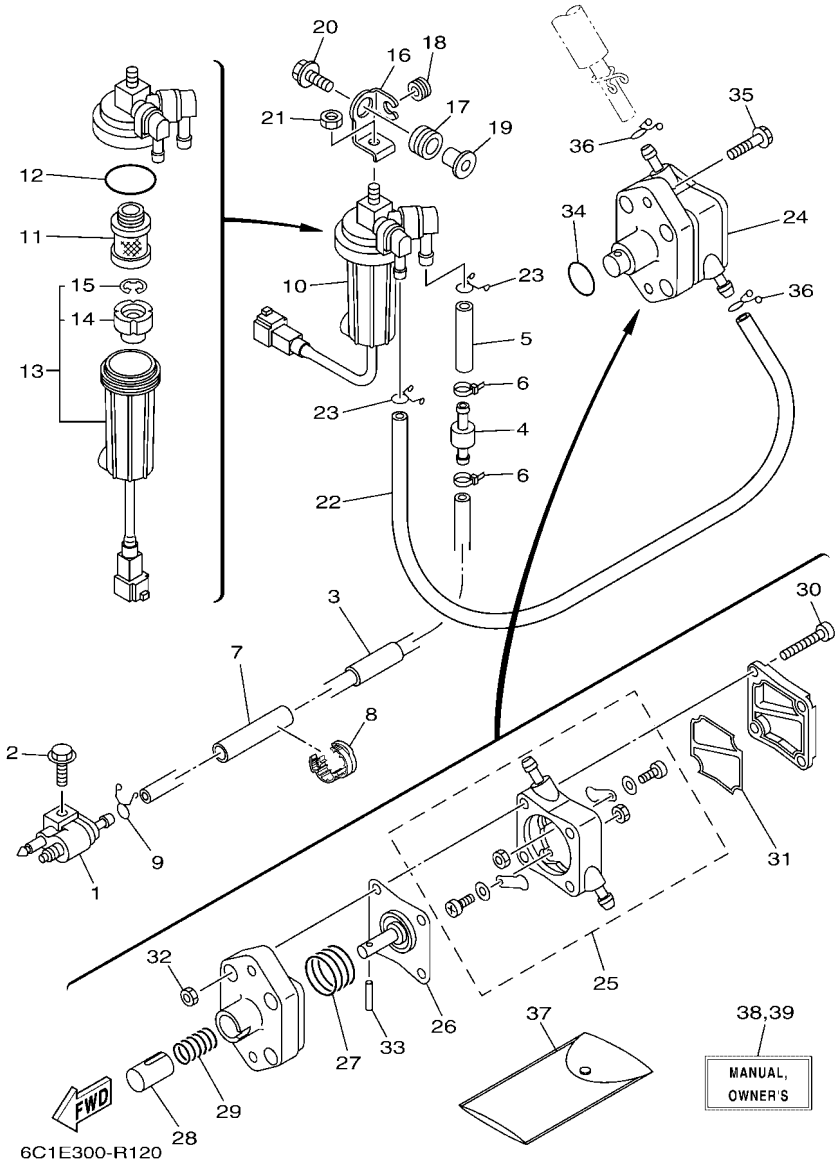

FIG. 12 FUEL — CARBURANT

REF. NO.	PART NO. N° PIECES	DESCRIPTION DESCRIPTION	6C2M	6C6M				REMARKS REMARQUES
1	6G1–24304–10	FUEL PIPE JOINT COMP. 1 DURITE RACCORDEMT. A ESSENCE	1	1				
2	97E95–06525	BOLT, HEXAGON W/W DEEP RECESS VIS HEXAGONAL AVC RONDELLE	1	1				
3	6C5–24313–10	PIPE 3 DURITE 3	1	1				
4	67F–24377–00	PIPE, JOINT 2 DURITE RACCORDEMENT 2	1	1				
5	90445–13M02	HOSE (L40) DURITE (L40)	1	1				
6	90465–11M10	CLAMP BRIDE	2	2				
7	90446–13M11	HOSE (L65) DURITE (L65)	1	1				
8	90464–13227	CLAMP BRIDE	1	1				
9	90467–09M17	CLIP JONC	1	1				
10	6D8–24560–01	FILTER ASSY ENS FILTRE	1	1				
11	6D8–24563–00	.ELEMENT, FILTER .ELEMENT, FILTRE	1	1				
12	6D8–24564–00	.GASKET .JOINT	1	1				
13	6D8–24562–00	.CUP, FILTER .CUVETTE, FILTRE	1	1				
14	6D8–24469–00	..FLOAT, WATER LEVEL ..FLOTTEUR	1	1				
15	6D8–24519–00	..CLIP ..JONC	1	1				
16	6C5–24566–11	BRACKET, FILTER SUPPORT, FILTRE	1	1				
17	90480–16013	GROMMET PASSE-FIL	1	1				
18	90480–10M58	GROMMET PASSE-FIL	1	1				
19	90387–08095	COLLAR COLLERETTE	1	1				
20	90119–08148	BOLT, WITH WASHER BOULON, AVEC RONDELLE	1	1				
21	95380–08600	NUT ECROU	1	1				
22	90445–13M36	HOSE (L350) DURITE (L350)	1	1				
23	90467–10M04	CLIP JONC	2	2				
24	6C5–24410–01	FUEL PUMP ASSY POMPE A ESSENCE	1	1				
25	6C5–24415–00	.BODY 4 .CORPS 4	1	1				
26	62Y–24411–03	.DIAPHRAGM .DIAPHRAGME	1	1				
27	62Y–24423–00	.SPRING, DIAPHRAGM .RESSORT, DIAPHRAGME	1	1				

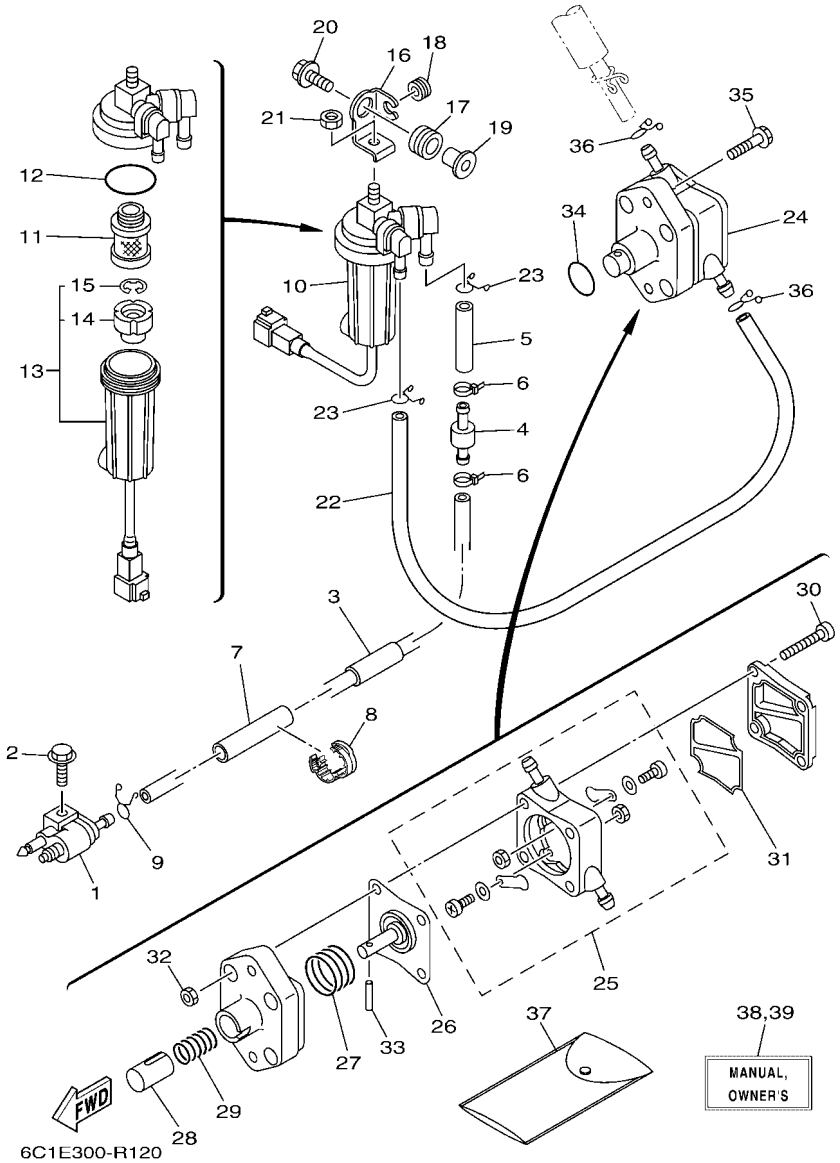

FIG. 12 FUEL — CARBURANT

REF. NO.	PART NO. N° PIECES	DESCRIPTION DESCRIPTION	6C2M	6C6M				REMARKS REMARQUES
28	62Y–13131–00	.PLUNGER .PLONGEUR	1	1				
29	62Y–24454–00	.SPRING .RESSORT	1	1				
30	62Y–24444–01	.SCREW .VIS	4	4				
31	6C5–24471–01	.DIAPHRAGM .DIAPHRAGME	1	1				
32	95380–05600	.NUT .ECROU	4	4				
33	62Y–24374–01	.PIN .PIN	1	1				
34	93210–24M79	O-RING JOINT TORIQUE	1	1				
35	97E95–06530	BOLT, HEXAGON W/W DEEP RECESS VIS HEXAGONAL AVC RONDELLE	2	2				
36	90467–10M04	CLIP JONC	2	2				
37	6C5–28100–01	TOOL KIT TROUSSE A OUTILS	1	1				AP AP
38	6C1–28199–7N–E0	MANUAL,OWNER'S MANUEL D'UTILISATION	1	1				UR (E) UR (E)
	6C1–28199–7N–F0	MANUAL,OWNER'S MANUEL D'UTILISATION	1	1				UR (F) UR (F)
	6C1–28199–7N–S0	MANUAL,OWNER'S MANUEL D'UTILISATION	1	1				UR (ES) UR (ES)
	6C1–28199–7N–G0	MANUAL,OWNER'S MANUEL D'UTILISATION	1	1				UR (D) UR (D)
	6C1–28199–7N–D0	MANUAL,OWNER'S MANUEL D'UTILISATION	1	1				UR (NL) UR (NL)
	6C1–28199–7N–H0	MANUAL,OWNER'S MANUEL D'UTILISATION	1	1				UR (I) UR (I)
39	6C1–28199–8N–K0	MANUAL,OWNER'S MANUEL D'UTILISATION	1	1				UR (DK) UR (DK)
	6C1–28199–8N–R0	MANUAL,OWNER'S MANUEL D'UTILISATION	1	1				UR (GR) UR (GR)
	6C1–28199–8N–P0	MANUAL,OWNER'S MANUEL D'UTILISATION	1	1				UR (P) UR (P)
	6C1–28199–8N–N0	MANUAL,OWNER'S MANUEL D'UTILISATION	1	1				UR (N) UR (N)
	6C1–28199–8N–M0	MANUAL,OWNER'S MANUEL D'UTILISATION	1	1				UR (S) UR (S)
	6C1–28199–8N–L0	MANUAL,OWNER'S MANUEL D'UTILISATION	1	1				UR (SF) UR (SF)

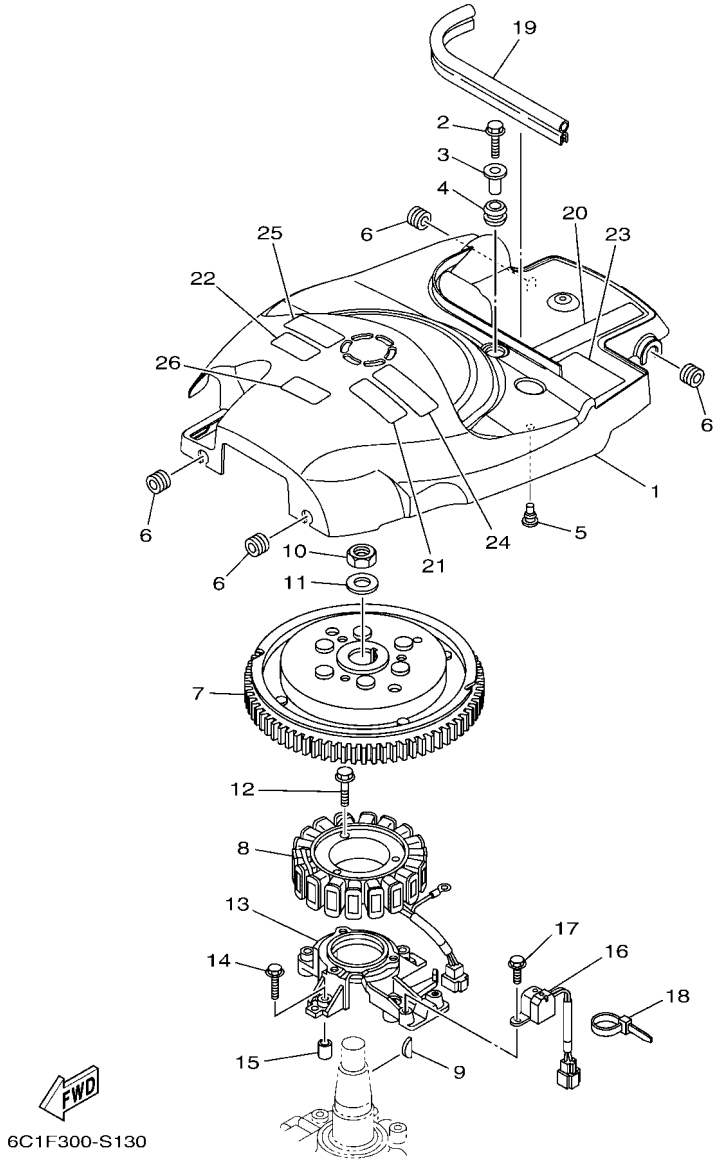

FIG. 13 GENERATOR — GENERATRICE

REF. NO.	PART NO. N° PIECES	DESCRIPTION DESCRIPTION	6C2M	6C6M				REMARKS REMARQUES
1	6C5–81337–11	COVER, FLYWHEEL COUVERCLE, VOLANT	1	1				
2	95D95–06020	BOLT, FLANGE DEEP RECESS BOULON FIXATION	1	1				
3	90387–06285	COLLAR COLLERETTE	1	1				
4	90480–15M31	GROMMET PASSE-FIL	1	1				
5	90480–06M19	GROMMET PASSE-FIL	1	1				
6	90480–12314	GROMMET PASSE-FIL	4	4				
7	6C5–81450–00	ROTOR ASSY ROTOR COMPLET	1	1				
8	6C5–81410–01	STATOR ASSY STATOR COMPLET	1	1				
9	6H4–11545–00	KEY, WOODRUFF CLAVETTE, DEMI-LUNE	1	1				
10	90170–20137	NUT ECROU	1	1				
11	90201–21M18	WASHER, PLATE RONDELLE, PLATE	1	1				
12	95023–06030	BOLT BOULON, A COLLERETTE	3	3				
13	6C5–85561–00	BASE, MAGNETO BASE, MAGNETO	1	1				
14	95023–06030	BOLT BOULON, A COLLERETTE	4	4				
15	99530–08012	PIN, DOWEL GOUJON, D'ASSEMBLAGE	2	2				
16	62Y–85580–00	COIL, PULSER BOBINE, PULSEUR	1	1				
17	97595–05512	BOLT, WITH WASHER VIS HEXAGONAL AVC RONDELLE	2	2				
18	90465–13M97	CLAMP BRIDE	1	1				
19	6CB–42617–00	DAMPER, FORM BOURRELET, CAOUTCHOUC	1	1				
20	6C5–13437–64	MARK, CAUTION MAKER	1	1				
21	6EE–81995–40	LABEL, WARNING ETIQUETTE, AVERTISSEMENT	1	1				
22	6EE–81995–50	LABEL, WARNING ETIQUETTE, AVERTISSEMENT	1	1				
23	62Y–83626–00	MARK 6 MARK 6	1	1				
24	6EE–81994–40	LABEL, SAFETY ETIQUETTE, SECURITE	1	1				
25	6EE–81994–50	LABEL, SAFETY ETIQUETTE, SECURITE	1	1				
26	6AG–81996–00	MARK MARQUE	1	1				

FIG. 14 ELECTRICAL 1 — PARTIE ELECTRIQUE 1

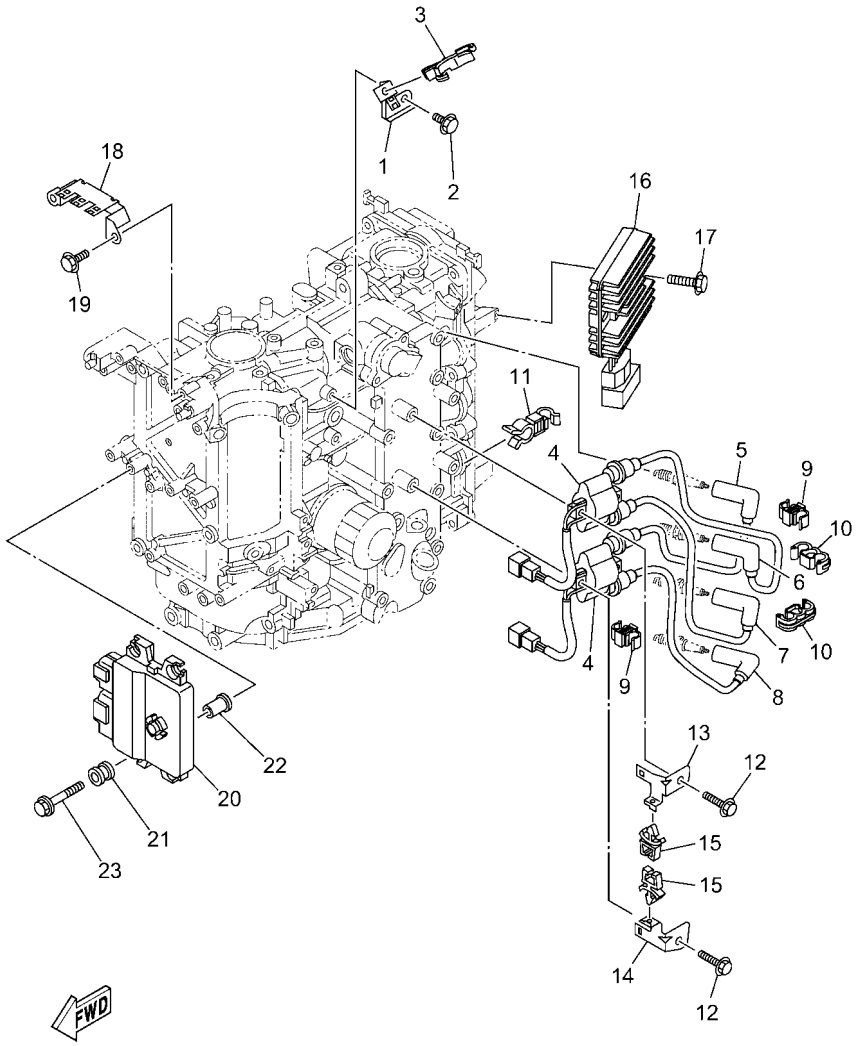

6C1M110-Y140

REF. NO.	PART NO. N° PIECES	DESCRIPTION DESCRIPTION	6C2M	6C6M				REMARKS REMARQUES
1	6C5–85525–00	PLATE PLAQUE	1	1				
2	97E95–06514	BOLT, HEXAGON W/W DEEP RECESS VIS HEXAGONAL AVC RONDELLE	1	1				
3	90464–18246	CLAMP BRIDE	1	1				
4	63P–82310–01	IGNITION COIL ASSY BOBINE D'ALLUMAGE	2	2				
5	6C5–82340–10	HIGH TENSION CORD ASSY 1 CABLE HAUTE TENSION 1	1	1				
6	6C5–82340–20	HIGH TENSION CORD ASSY 2 CABLE HAUTE TENSION 2	1	1				
7	6C5–82340–30	HIGH TENSION CORD ASSY 3 CABLE HAUTE TENSION 3	1	1				
8	6C5–82340–40	HIGH TENSION CORD ASSY 4 CABLE HAUTE TENSION 4	1	1				
9	90464–07019	CLAMP BRIDE	2	2				
10	90464–07020	CLAMP BRIDE	2	2				
11	90464–13013	CLAMP BRIDE	1	1				
12	97E95–06525	BOLT, HEXAGON W/W DEEP RECESS VIS HEXAGONAL AVC RONDELLE	4	4				
13	6C5–82316–01	BRACKET, IGNITION COIL SUPPORT, BOBINE D'ALLUMAGE	1	1				
14	6C5–82316–11	BRACKET, IGNITION COIL SUPPORT, BOBINE D'ALLUMAGE	1	1				
15	90464–06001	CLAMP BRIDE	2	2				
16	68V–81960–10	RECTIFIER & REGULATOR ASSY REDRESSEUR REGULATEUR CPLT	1	1				
17	97E95–06525	BOLT, HEXAGON W/W DEEP RECESS VIS HEXAGONAL AVC RONDELLE	2	2				
18	6C5–82171–00	STAY, FUSE BOX SUPPORT, BOITE A FUSIBLES	1	1				
19	97E95–06514	BOLT, HEXAGON W/W DEEP RECESS VIS HEXAGONAL AVC RONDELLE	2	2				
20	6C1–8591A–25	ENGINE CONTROL UNIT ASSY BLOC DE CONTROL	1					
	6C5–8591A–25	ENGINE CONTROL UNIT ASSY BLOC DE CONTROL		1				
21	6C5–82317–01	DAMPER, IGNITION COIL AMORTISSEUR, BOBINE D'ALLUM	4	4				
22	90387–06119	COLLAR COLLERETTE	4	4				
23	90119–06289	BOLT, WITH WASHER BOULON, AVEC RONDELLE	4	4				

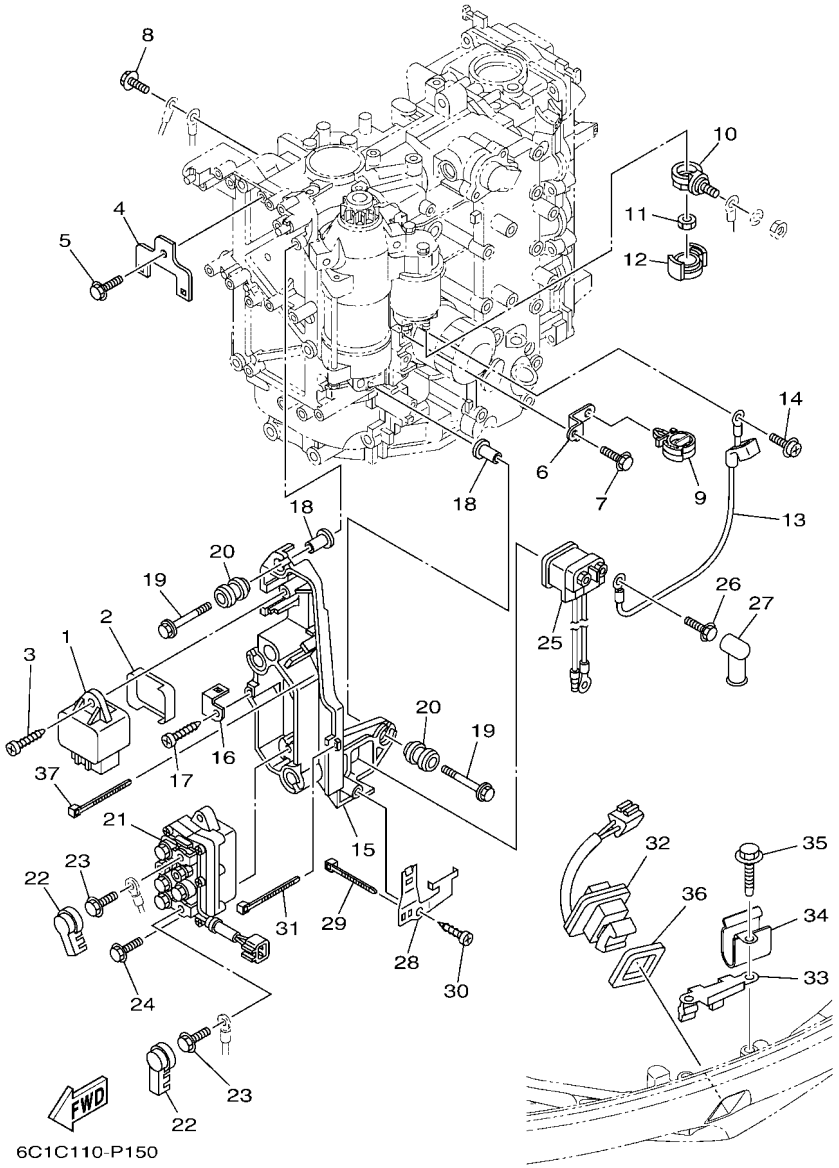

FIG. 15 ELECTRICAL 2 — PARTIE ELECTRIQUE 2

REF. NO.	PART NO. N° PIECES	DESCRIPTION DESCRIPTION	6C2M	6C6M				REMARKS REMARQUES
1	60E–81950–00	RELAY ASSY RELAIS COMPLET	1	1				
2	6C5–81336–01	GROMMET OEILLET CAOUTCHOUC	1	1				
3	97780–60620	SCREW, TAPPING VIS, TETE BOMBEE	1	1				
4	6C5–8257V–00	PLATE, CONNECTOR PLAQUE, CONNECTEUR	1	1				
5	97E95–06514	BOLT, HEXAGON W/W DEEP RECESS VIS HEXAGONAL AVC RONDELLE	1	1				
6	6C5–85525–10	PLATE PLAQUE	1	1				
7	97E95–06620	BOLT, HEXAGON W/W DEEP RECESS VIS HEXAGONAL AVC RONDELLE	3	3				
8	97E95–06620	BOLT, HEXAGON W/W DEEP RECESS VIS HEXAGONAL AVC RONDELLE	1	1				
9	90464–12183	CLAMP BRIDE	1	1				
10	60V–81925–00	TERMINAL BORNE	1	1				
11	90179–08003	NUT ECROU	1	1				
12	68F–82582–00	CAP,1 COUVERCLE 1	1	1				
13	6C5–81815–00	CORD, STARTER MOTOR FIL, DEMARREUR ELECTRIQUE	1	1				
14	90159–04005	SCREW, WITH WASHER VIS, AVEC RONDELLE	1	1				
15	6C5–81948–00	BRACKET SUPPORT	1	1				
16	6C5–85548–01	HOLDER SUPPORT	1	1				
17	97780–60620	SCREW, TAPPING VIS, TETE BOMBEE	1	1				
18	90387–06119	COLLAR COLLERETTE	4	4				
19	90119–06289	BOLT, WITH WASHER BOULON, AVEC RONDELLE	4	4				
20	6A0–82317–01	DAMPER, IGNITION COIL AMORTISSEUR, BOBINE D'ALLUM	4	4				
21	63P–81950–00	RELAY ASSY RELAIS COMPLET	1	1				
22	6P2–8183X–00	CAP, TERMINAL COUVERCLE, BORNE	2	2				
23	97E95–06610	BOLT, HEXAGON W/W DEEP RECESS VIS HEXAGONAL AVC RONDELLE	2	2				
24	97E95–06520	BOLT, HEXAGON W/W DEEP RECESS VIS HEXAGONAL AVC RONDELLE	2	2				
25	68V–8194A–00	RELAY RELAIS	1	1				
26	97E95–06610	BOLT, HEXAGON W/W DEEP RECESS VIS HEXAGONAL AVC RONDELLE	2	2				
27	6G5–82119–00	COVER, LEAD WIRE GARNITURE, FIL	2	2				

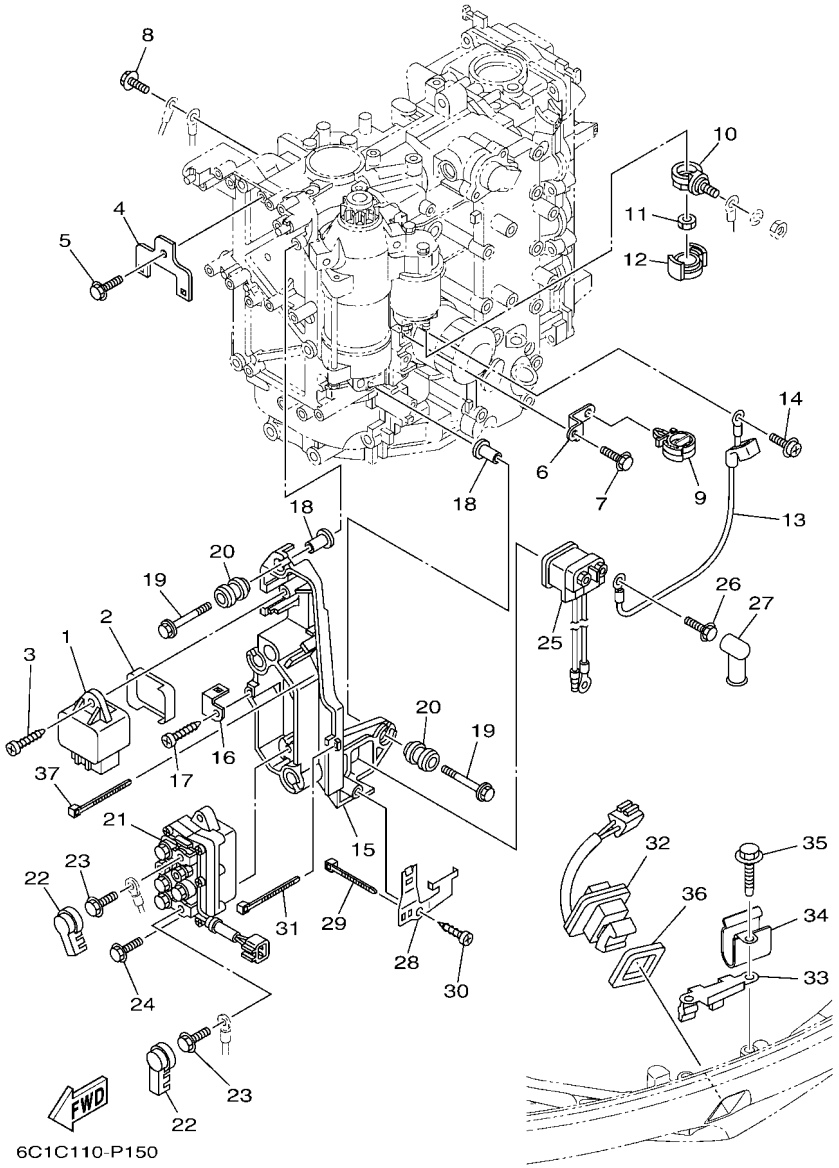

FIG. 15 ELECTRICAL 2 — PARTIE ELECTRIQUE 2

REF. NO.	PART NO. N° PIECES	DESCRIPTION DESCRIPTION	6C2M	6C6M				REMARKS REMARQUES
28	6C5–81953–00	STAY, RELAY SUPPORT, RELAIS	1	1				
29	90465–11M10	CLAMP BRIDE	1	1				
30	97780–60620	SCREW, TAPPING VIS, TETE BOMBEE	1	1				
31	90465–13M97	CLAMP BRIDE	1	1				
32	69J–82563–01	TRIM & TILT SWITCH ASSY INCLINER ET PARER COMMUTATEUR	1	1				
33	6BG–83614–00	BRACKET SUPPORT	1	1				
34	90465–08M89	CLAMP BRIDE	1	1				
35	90109–06M86	BOLT BOULON	2	2				
36	69J–82587–01	GASKET JOINT	1	1				
37	90465–13M97	CLAMP BRIDE	2	2				

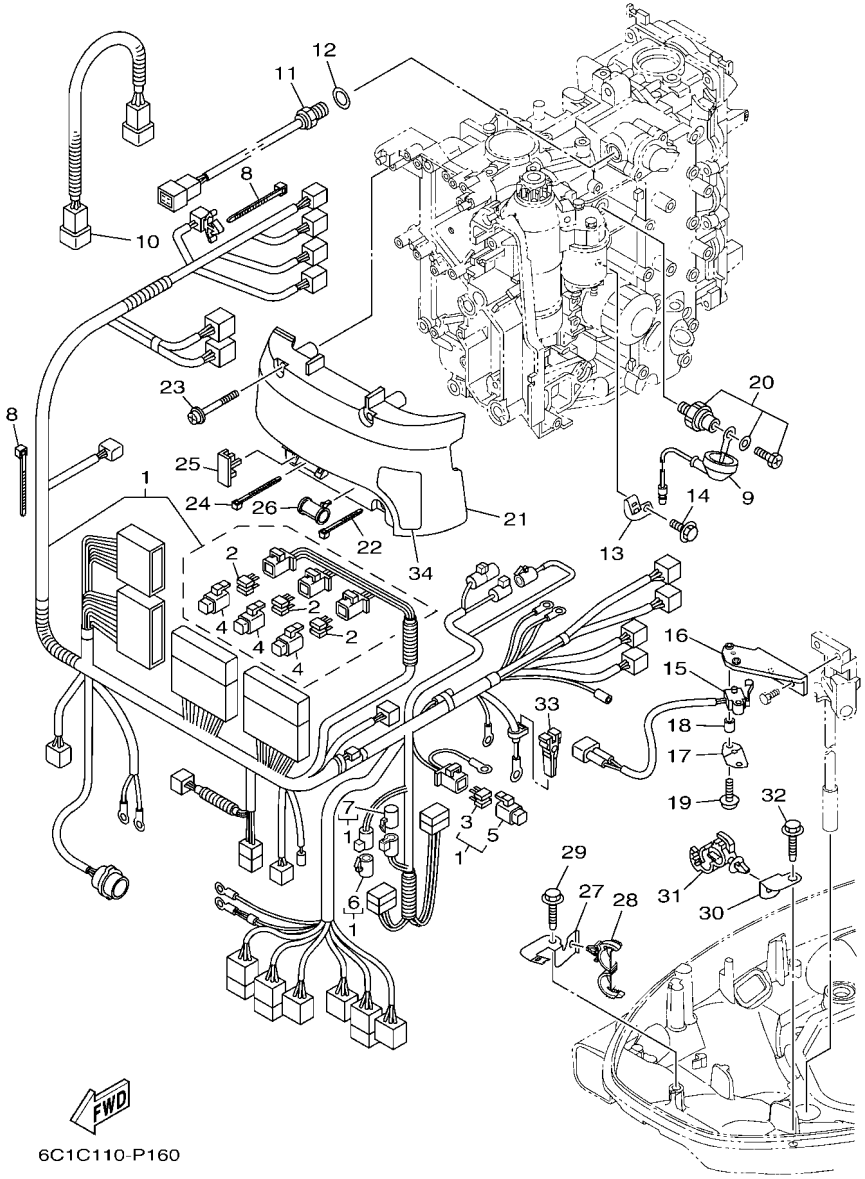

FIG. 16 ELECTRICAL 3 — PARTIE ELECTRIQUE 3

REF. NO.	PART NO. N° PIECES	DESCRIPTION DESCRIPTION	6C2M	6C6M				REMARKS REMARQUES
1	6C5–82590–D2	WIRE HARNESS ASSY FAISCEAU DE FILS COMPLET	1	1				FOR TILT LIMIT FOR TILT LIMIT
2	67F–82151–00	.FUSE (20A) .FUSIBLE (20A)	6	6				
3	67F–82151–10	.FUSE (30A) .FUSIBLE (30A)	2	2				
4	67F–8215B–10	.CAP (YELLOW) .BOUCHON (YELLOW)	3	3				
5	67F–8215B–20	.CAP (GREEN) .BOUCHON (GREEN)	1	1				
6	6DA–82582–00	.CAP 1 (FEMALE) .BOUCHON 1 (FEMME)	1	1				
7	6DA–82582–10	.CAP 1 (MALE) .BOUCHON 1 (MALE)	1	1				
8	90465–13M11	CLAMP BRIDE	2	2				
9	68V–81315–01	LEAD WIRE ASSY FIL	1	1				
10	6C5–82553–00	EXTENSION, WIRE LEAD EXTENSION, FAISCEAU	1	1				
11	6CJ–85790–00	THERMOSENSOR ASSY SENSITOMETRE	1	1				
12	90430–14115	GASKET JOINT	1	1				
13	6C5–82388–10	PLATE PLAQUETTE	1	1				
14	97E95–06514	BOLT, HEXAGON W/W DEEP RECESS VIS HEXAGONAL AVC RONDELLE	1	1				
15	60V–8259F–01	SWITCH ASSY COMMUTATEUR	1	1				
16	6CJ–82554–00	STAY, NEUTRAL SWITCH SUPPORT, CONT DE POINT-MORT	1	1				
17	61A–82588–01	PLATE PLAQUE	1	1				
18	90387–04001	COLLAR COLLERETTE	1	1				
19	97985–04116	SCREW, WITH WASHER VIS, AVEC RONDELLE	2	2				
20	64J–82504–00	OIL PRESSURE SWITCH ASSY CONTACTEUR DE PRESSION D'HUILE	1	1				
21	6C5–81942–00	COVER COUVERCLE	1	1				
22	90465–13M39	CLAMP BRIDE	1	1				
23	90159–06M14	SCREW, WITH WASHER VIS, AVEC RONDELLE	4	4				
24	90465–13M24	CLAMP BRIDE	1	1				
25	6C5–82176–01	DAMPER AMORTISSEUR	2	2				
26	6C5–8252R–00	DAMPER AMORTISSEUR	1	1				
27	6BG–42811–01	STAY SUPPORT	1	1				

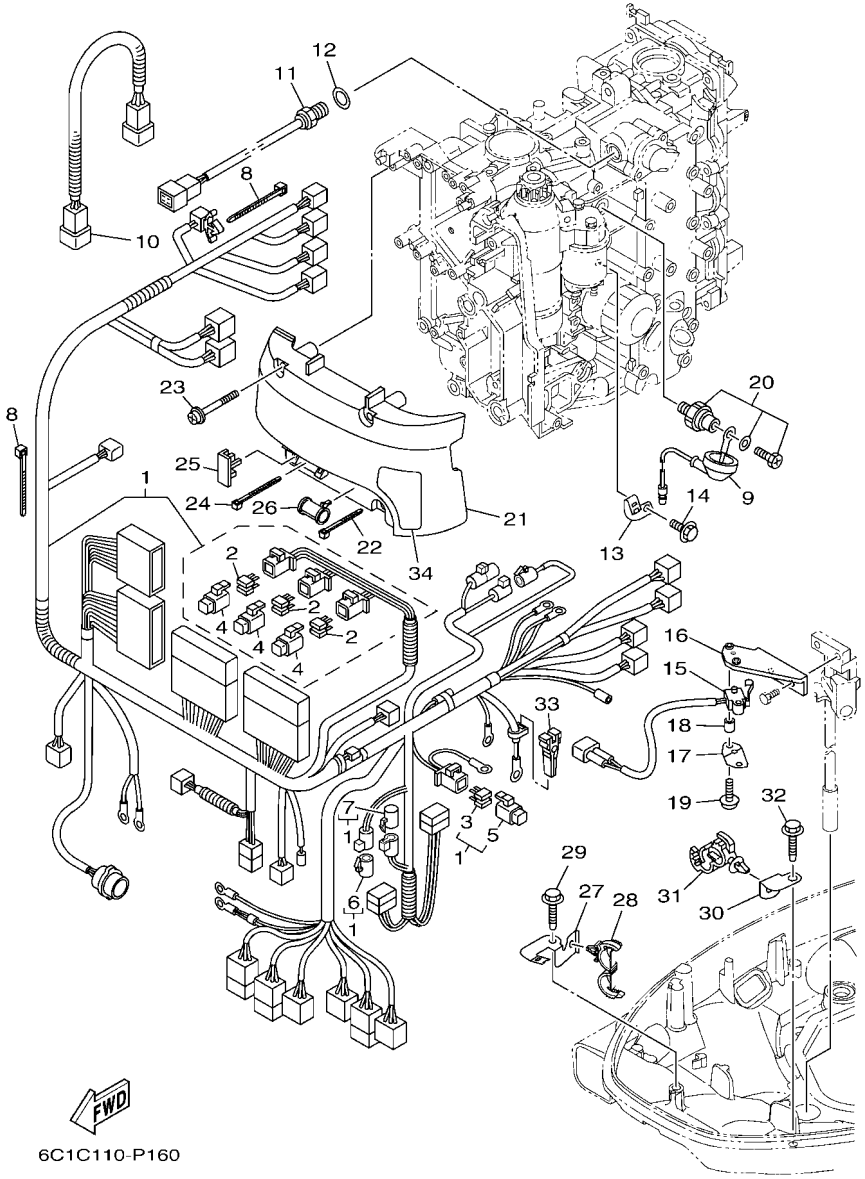

FIG. 16 ELECTRICAL 3 — PARTIE ELECTRIQUE 3

REF. NO.	PART NO. N° PIECES	DESCRIPTION DESCRIPTION	6C2M	6C6M				REMARKS REMARQUES
28	90464–18205	CLAMP BRIDE	1	1				
29	90109–06M86	BOLT BOULON	1	1				
30	63P–42756–00	STAY, CLAMP SUPPORT, COLLIER	1	1				
31	90464–12183	CLAMP BRIDE	1	1				
32	90109–06M86	BOLT BOULON	1	1				
33	67F–2812A–00	PULLER, FUSE TENDEUR, FUSIBLE	1	1				
34	6C5–81919–00	GRAPHIC, REGULATOR ADHESIF, REGULATEUR	1	1				

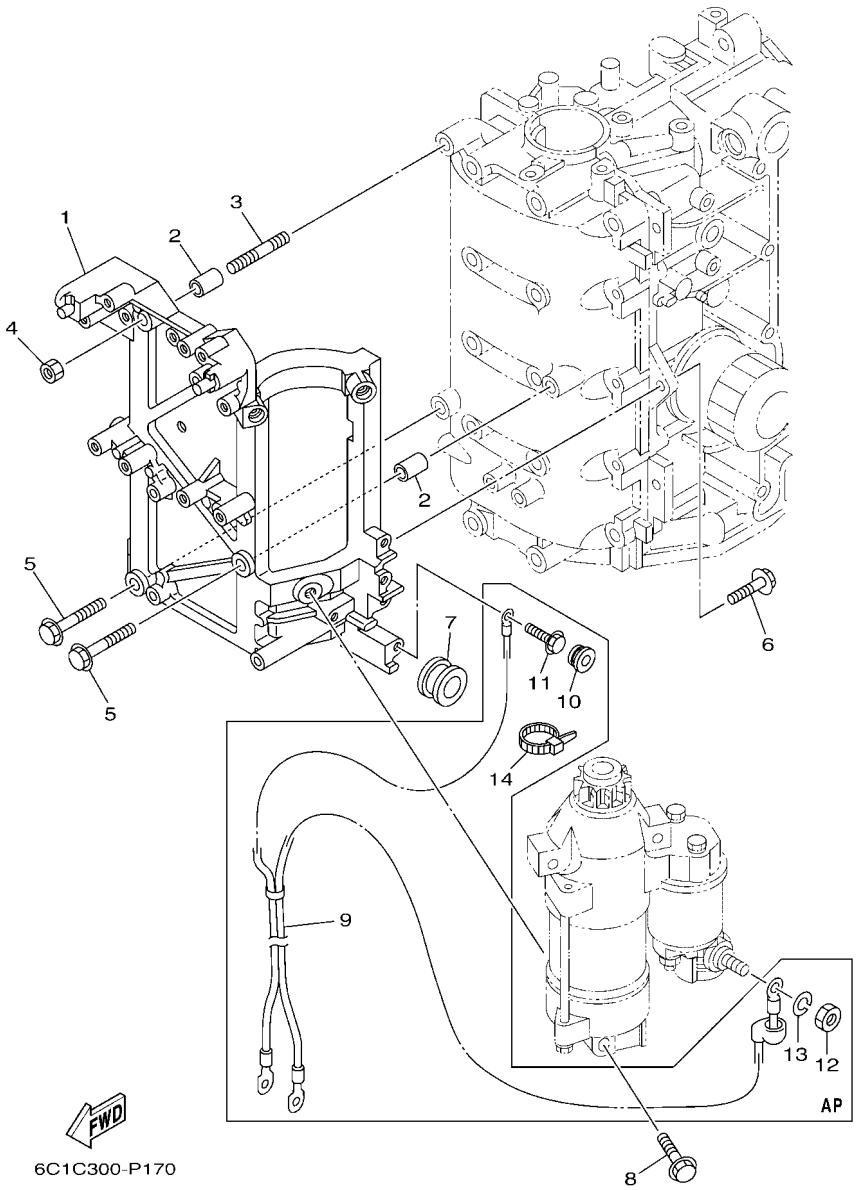

FIG. 17 ELECTRICAL 4 — PARTIE ELECTRIQUE 4

REF. NO.	PART NO. N° PIECES	DESCRIPTION DESCRIPTION	6C2M	6C6M				REMARKS REMARQUES
1	6C5–81822–00	BRACKET, STARTING MOTOR SUPPORT, DEMARREUR ELECTRIQUE	1	1				
2	99530–10114	PIN, DOWEL GOUJON, D'ASSEMBLAGE	2	2				
3	95680–08330	BOLT, STUD GOUJON	1	1				
4	95380–08600	NUT ECROU	1	1				
5	97E95–08535	BOLT, HEXAGON W/W DEEP RECESS VIS HEXAGONAL AVC RONDELLE	2	2				
6	97E95–08525	BOLT, HEXAGON W/W DEEP RECESS VIS HEXAGONAL AVC RONDELLE	2	2				
7	90480–24003	GROMMET PASSE-FIL	1	1				
8	97513–08545	BOLT, WITH WASHER VIS HEXAGONAL AVC RONDELLE	3	3				
9	6C5–82105–02	BATTERY CABLE CABLE DE BATTERIE	1	1				AP AP
10	90480–12072	GROMMET PASSE-FIL	1	1				AP AP
11	97E95–06620	BOLT, HEXAGON W/W DEEP RECESS VIS HEXAGONAL AVC RONDELLE	1	1				AP AP
12	95333–08600	NUT ECROU	1	1				AP AP
13	92903–08100	WASHER, SPRING RONDELLE, GROWER	1	1				AP AP
14	90465–13M18	CLAMP BRIDE	1	1				AP AP

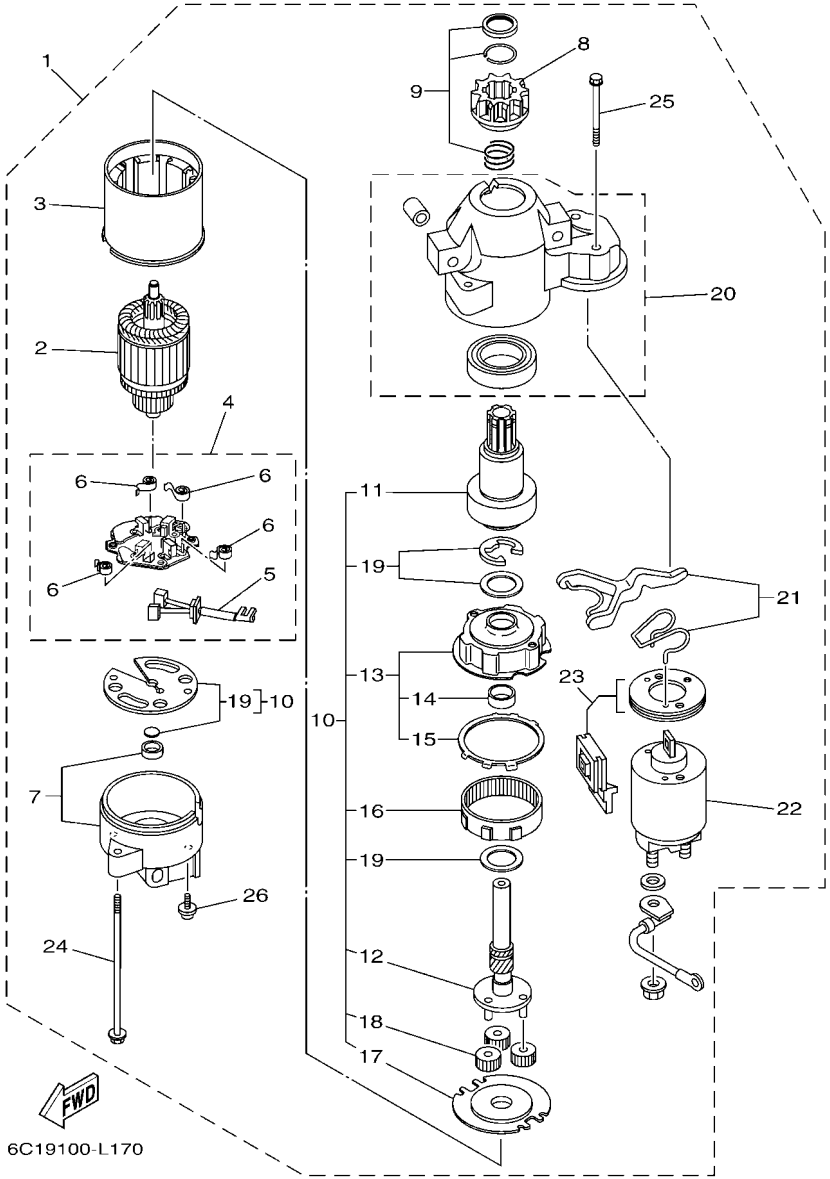

FIG. 18 STARTING MOTOR — DEMARREUR ELECTRIQUE

REF. NO.	PART NO. N° PIECES	DESCRIPTION DESCRIPTION	6C2M	6C6M				REMARKS REMARQUES
1	6CJ–81800–01	STARTING MOTOR ASSY DEMARREUR ELECTRIQUE COMPLET	1	1				
2	67F–81850–00	.ARMATURE ASSY .INDUIT	1	1				
3	67F–81810–00	.STATOR ASSY .STATOR COMPLET	1	1				
4	69J–81840–11	.BRUSH HOLDER ASSY .SUPPORT DE CHARBON	1	1				
5	69J–81801–11	..BRUSH SET ..JEU DE BROSSE	1	1				
6	67F–81813–00	..SPRING, BRUSH ..RESSORT, DE CHARBON	4	4				
7	68F–81820–00	.REAR BRACKET ASSY .SUPPORT ARRIERE COMPLET	1	1				
8	67F–81808–00	.PINION ASSY .PIGNON	1	1				
9	67F–81857–00	.PINION STOPPER SET .BUTEE PIGNON	1	1				
10	67F–81807–00	.GEAR ASSY, STARTING MOTOR .PIGNON, DEMARREUR ELECTRIQUE	1	1				
11	67F–81832–00	..CLUTCH, OVER RUN ..EMBRAYAGE, ROUE LIBRE	1	1				
12	67F–81836–00	..SHAFT, PINION ..AXE, PIGNON	1	1				
13	67F–81821–00	..BRACKET, CENTER 1 ..SUPPORT, CENTRE 1	1	1				
14	67F–81841–00	...BEARING ...ROULEMENT	1	1				
15	67F–8183R–00	...GASKET ...JOINT	1	1				
16	67F–81891–00	..GEAR, RING ..ROUE DENTEE	1	1				WITH 67F-8183R-00 WITH 67F-8183R-00
17	67F–81830–00	..BRACKET, CENTER 2 ..SUPPORT, CENTRE 2	1	1				
18	60V–8183T–00	..GEAR, IDLER ..PIGNON, INTERMEDIAIRE	3	3				
19	67F–81809–00	..WASHER KIT ..JEU DE RONDELLES	1	1				
20	60X–81842–00	.COVER .COUVERCLE	1	1				
21	6C5–81839–00	.LEVER ASSY .LEVIER COMPLET	1	1				
22	6C5–81941–00	.STARTER RELAY ASSY .LANCEUR RELAIS (ENS.)	1	1				
23	6C5–81869–00	.COVER, DUST .COUVERCLE, POUSSIERE	1	1				
24	6K7–81826–11	.BOLT .BOULON	2	2				
25	69J–81828–00	.BOLT 2 .BOULON 2	2	2				
26	67F–81846–00	.SCREW .VIS	2	2				

FIG. 19 BOTTOM COWLING 1 — CAPOT INFERIEUR 1

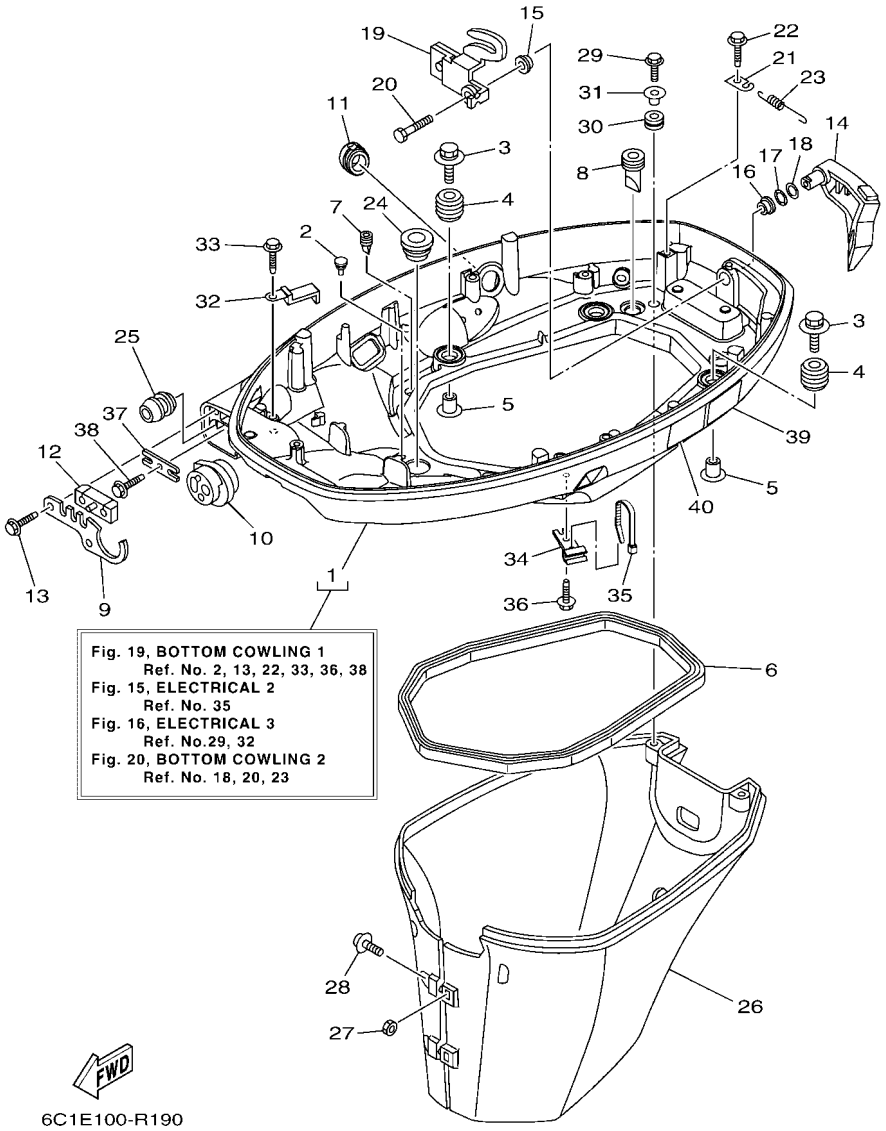

REF. NO.	PART NO. N° PIECES	DESCRIPTION DESCRIPTION	6C2M	6C6M				REMARKS REMARQUES
1	6CJ–42710–02–8D	BOTTOM COWLING ASSY ENS. EMBASE	1	1				
2	6H4–42748–01	GROMMET PASSE-FIL	3	3				
3	90119–06291	BOLT, WITH WASHER BOULON, AVEC RONDELLE	4	4				
4	6BG–42748–01	GROMMET PASSE-FIL	4	4				
5	90387–06M69	COLLAR COLLERETTE	4	4				
6	62Y–42716–01	RUBBER SEAL 1 JOINT EN CAOUTCHOUC 1	1	1				
7	65W–42717–00	RUBBER, SEAL 2 JOINT EN CAOUTCHOUC 2	2	2				
8	61A–42717–00	RUBBER, SEAL 2 JOINT EN CAOUTCHOUC 2	2	2				
9	6BG–42761–00	STOPPER PLAQUETTE	1	1				
10	6CJ–42725–01	GROMMET PASSE-FIL	1	1				
11	6CJ–42726–10	GROMMET PASSE-FIL	1	1				
12	6BG–42727–01	GROMMET PASSE-FIL	1	1				
13	90109–06M86	BOLT BOULON	2	2				
14	6BG–42815–00–8D	LEVER, CLAMP 1 LEVIER, PRESSE 1	1	1				
15	90386–12M37	BUSH DOUILLE	1	1				
16	90386–12MA2	BUSH DOUILLE	1	1				
17	90206–12052	WASHER, WAVE RONDELLE, ONDULEE	1	1				
18	90201–12M07	WASHER, PLATE RONDELLE, PLATE	1	1				
19	6BG–42816–00	LEVER, CLAMP 2 LEVIER, PRESSE 2	1	1				
20	97D95–06014	BOLT, HEXAGON DEEP RECESS VIS HEXAGONAL	1	1				
21	66T–43144–00	HOOK, SPRING CROCHET	1	1				
22	90109–06M86	BOLT BOULON	1	1				
23	90506–18023	SPRING, TENSION RESSORT, TENSION	1	1				
24	68U–42727–01	GROMMET PASSE-FIL	1	1				
25	6BG–24329–01	SEAL JOINT	1	1				
26	6BG–42741–10–8D	APRON CAPOT LATERAL	1	1				
27	95380–06600	NUT, HEXAGON ECROU	2	2				

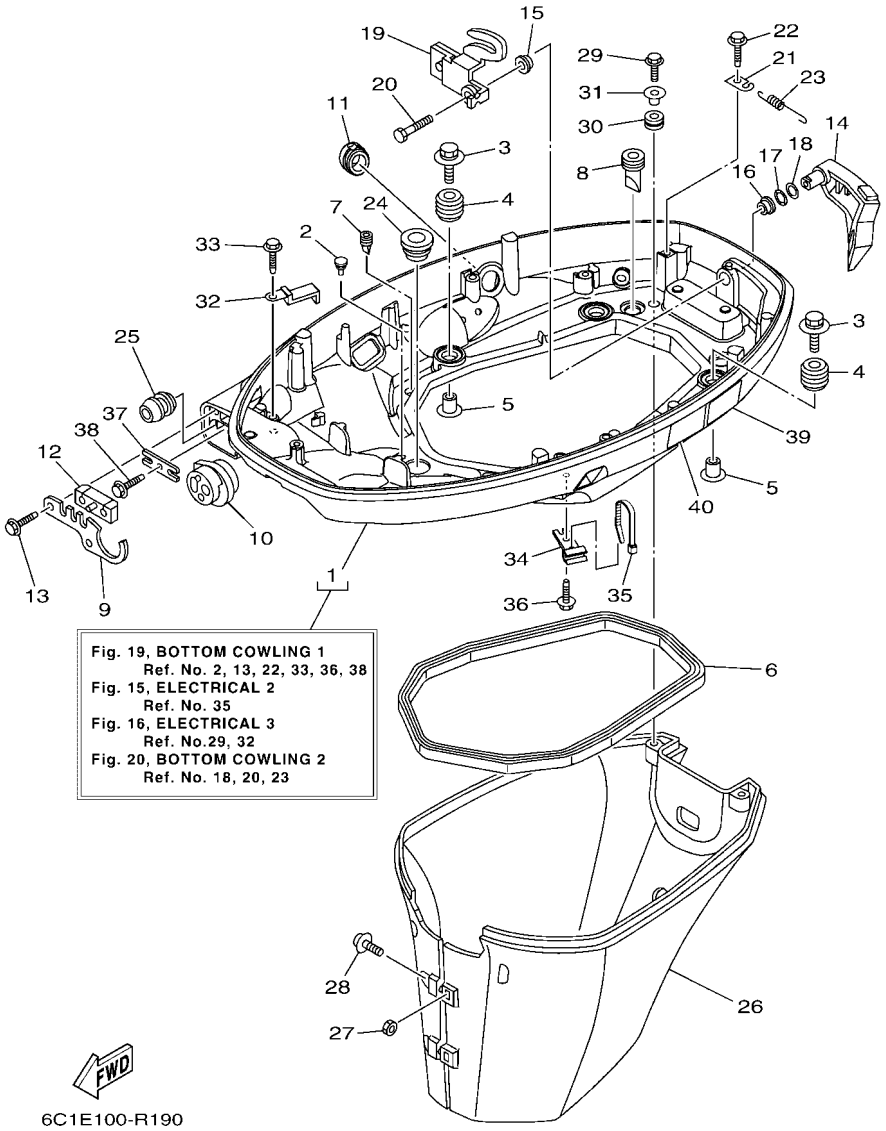

FIG. 19 BOTTOM COWLING 1 — CAPOT INFERIEUR 1

REF. NO.	PART NO. N° PIECES	DESCRIPTION DESCRIPTION	6C2M	6C6M				REMARKS REMARQUES
28	97980–06325	SCREW, WITH WASHER VIS, AVEC RONDELLE	2	2				
29	90109–06M80	BOLT BOULON	2	2				
30	90480–13M24	GROMMET PASSE-FIL	2	2				
31	90387–06M43	COLLAR COLLERETTE	2	2				
32	90462–20005	CLAMP BRIDE	1	1				
33	90109–06M86	BOLT BOULON	1	1				
34	90464–09M49	CLAMP BRIDE	1	1				
35	90465–11M10	CLAMP BRIDE	1	1				
36	90109–06M86	BOLT BOULON	1	1				
37	6BG–48538–00	CLAMP, CABLE 1 COLLIER	1	1				
38	90109–06M86	BOLT BOULON	1	1				
39	6EE–42794–40	LABEL, WARNING (GENERAL) ETIQUETTE, AVERTISSEMENT	1	1				
40	6EE–42794–50	LABEL, WARNING (GENERAL) ETIQUETTE, AVERTISSEMENT	1	1				

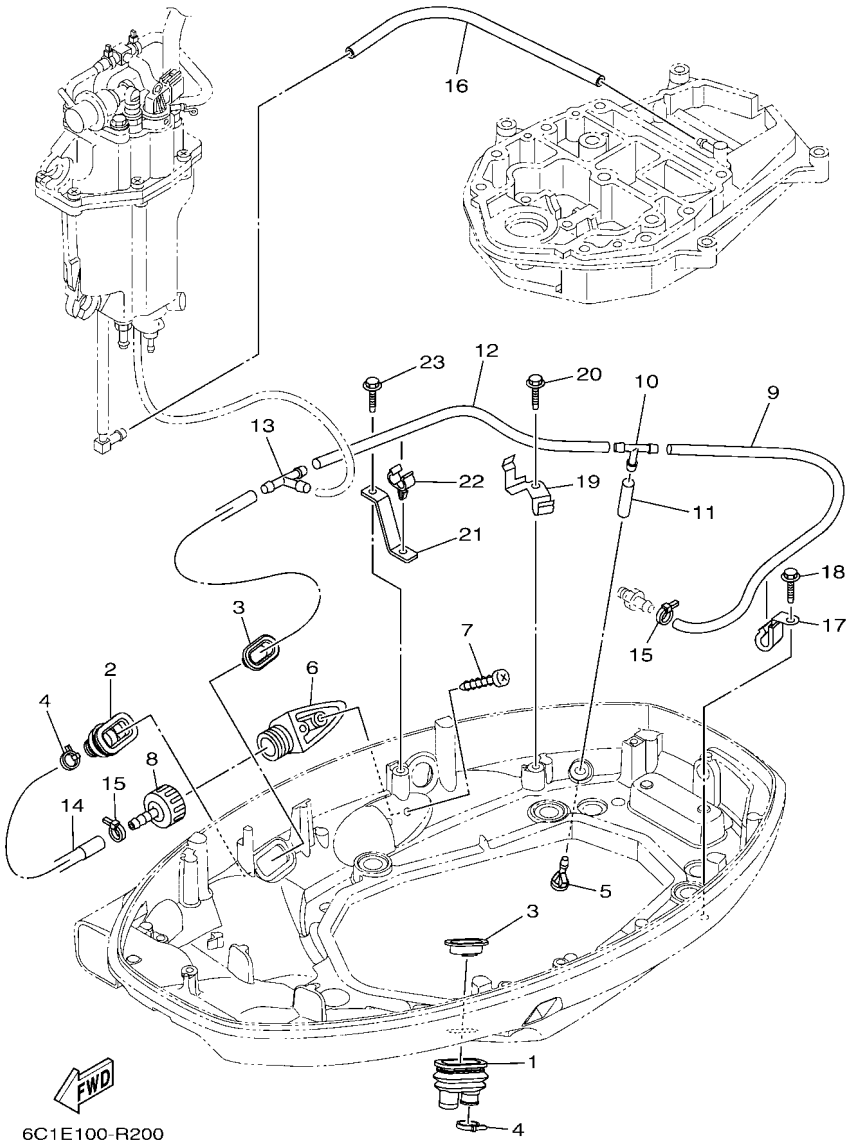

FIG. 20 BOTTOM COWLING 2 — CAPOT INFERIEUR 2

REF. NO.	PART NO. N° PIECES	DESCRIPTION DESCRIPTION	6C2M	6C6M				REMARKS REMARQUES
1	6H1–42726–31	GROMMET PASSE-FIL	1	1				
2	6BG–42724–01	GROMMET PASSE-FIL	1	1				
3	6BG–42384–00	SEAL, CAP JOINT, CAPUCHON	2	2				
4	90465–11M10	CLAMP BRIDE	2	2				
5	6BL–44391–00	NIPPLE, HOSE RACCORD D'ESSENCE	1	1				
6	6AW–12572–00	ADAPTER ADAPTATEUR	1	1				
7	97780–60520	SCREW, TAPPING VIS, TETE BOMBEE	2	2				
8	6R3–12580–00	JOINT ASSY ARTICULER (ENS.)	1	1				
9	90445–09036	HOSE (L400) DURITE (L400)	1	1				
10	688–24378–00	PIPE, JOINT 3 DURITE RACCORDEMENT 3	1	1				
11	90445–09220	HOSE (L30) DURITE (L30)	1	1				
12	90445–096H2	HOSE (L280) DURITE (L280)	1	1				
13	688–24378–00	PIPE, JOINT 3 DURITE RACCORDEMENT 3	1	1				
14	6BG–12481–00	PIPE 1 DURITE 1	1	1				
15	90465–11M10	CLAMP BRIDE	2	2				
16	90445–09304	HOSE (L310) DURITE (L310)	1	1				
17	90462–08067	CLAMP BRIDE	1	1				
18	90109–06M86	BOLT BOULON	1	1				
19	6BG–24136–01	CLAMP 2 COLLIER 2	1	1				
20	90109–06M86	BOLT BOULON	1	1				
21	6CJ–24135–00	CLAMP 1 COLLIER 1	1	1				
22	90464–09130	CLAMP BRIDE	1	1				
23	90109–06M86	BOLT BOULON	1	1				

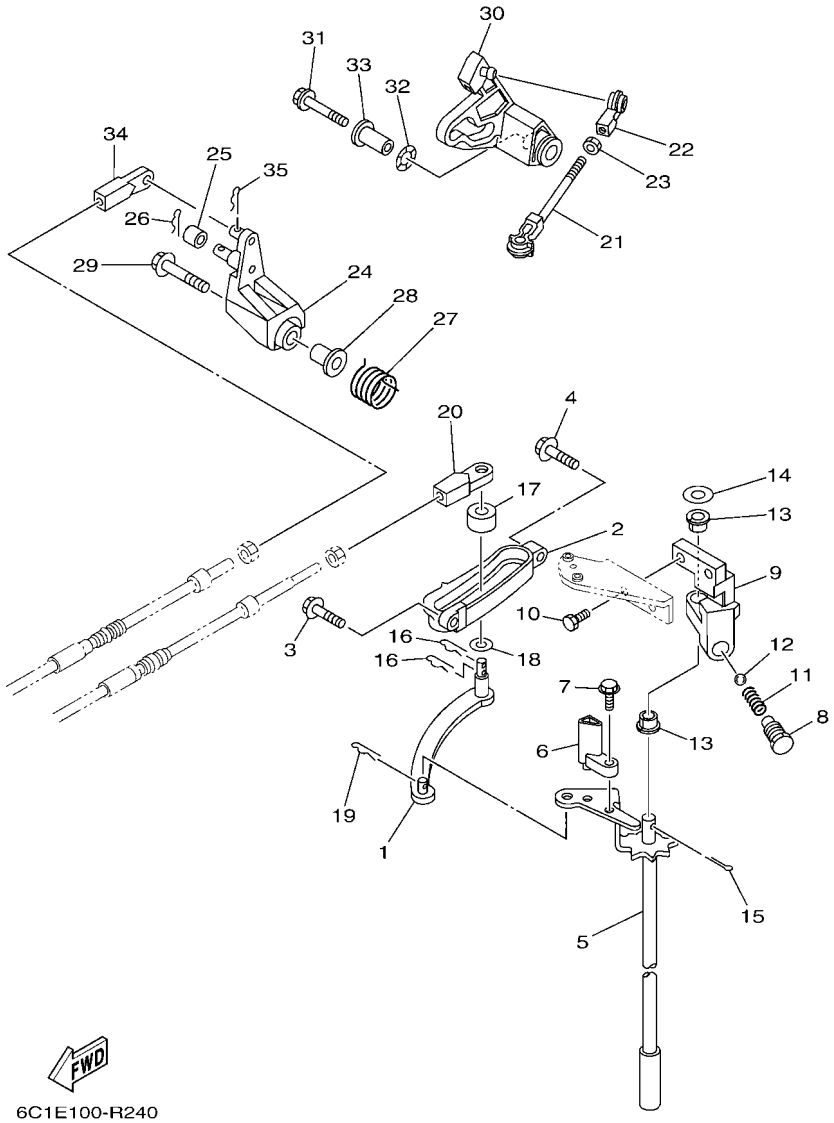

FIG. 21 CONTROL — COMMANDE

REF. NO.	PART NO. N° PIECES	DESCRIPTION DESCRIPTION	6C2M	6C6M				REMARKS REMARQUES
1	69W–44121–00	LEVER, SHIFT ROD LEVIER, TIGE D'INVERSION	1	1				
2	62Y–44117–01	BRACKET SUPPORT	1	1				
3	97E95–06520	BOLT, HEXAGON W/W DEEP RECESS VIS HEXAGONAL AVC RONDELLE	1	1				
4	97E95–06525	BOLT, HEXAGON W/W DEEP RECESS VIS HEXAGONAL AVC RONDELLE	1	1				
5	6C5–44120–03	HANDLE GEAR SHIFT ASSY LEVIER D'EMBRAYAGE	1	1				L(20.9") L(20.9")
	6C5–44120–13	HANDLE GEAR SHIFT ASSY LEVIER D'EMBRAYAGE		1				X(25.4") X(25.4")
6	6C5–44122–00	BUSHING, SHIFT ROD LEVER DOUILLE, LEVIER D'EMBRAYAGE	1	1				
7	97595–05514	BOLT, WITH WASHER VIS HEXAGONAL AVC RONDELLE	1	1				
8	62Y–42715–01	BUSHING 2 COUSSINET 2	1	1				
9	62Y–44118–00–94	BRACKET SUPPORT	1	1				
10	90101–06063	BOLT BOULON	2	2				
11	90501–12082	SPRING, COMPRESSION RESSORT, COMPRESSION	1	1				
12	93501–04M02	BALL BILLE	1	1				
13	90386–90M90	BUSH DOUILLE	2	2				
14	90201–10M20	WASHER, PLATE RONDELLE, PLATE	1	1				
15	91490–20015	PIN. COTTER GOUPILLE	1	1				
16	90468–18008	CLIP JONC	2	2				
17	688–44122–00	BUSHING, SHIFT ROD LEVER DOUILLE, LEVIER D'EMBRAYAGE	1	1				
18	90202–07M07	WASHER, PLATE RONDELLE, PLATE	1	1				
19	90468–18008	CLIP JONC	1	1				
20	69W–48344–00	CABLE END, REMOTE CONTROL CHAPE CABLE	1	1				
21	688–41211–01	LINK, ACCEL. BIELLETTE, ACCELERATION	1	1				
22	6H4–41237–00	JOINT, LINK RACCORD	1	1				
23	95380–05700	NUT ECROU	1	1				
24	62Y–42154–A0	LEVER, THROTTLE CONTROL LEVIER DE COMMANDE D'AVANCE	1	1				
25	6C5–42171–00	BUSHING COUSSINET	1	1				
26	91490–16010	PIN. COTTER GOUPILLE	1	1				

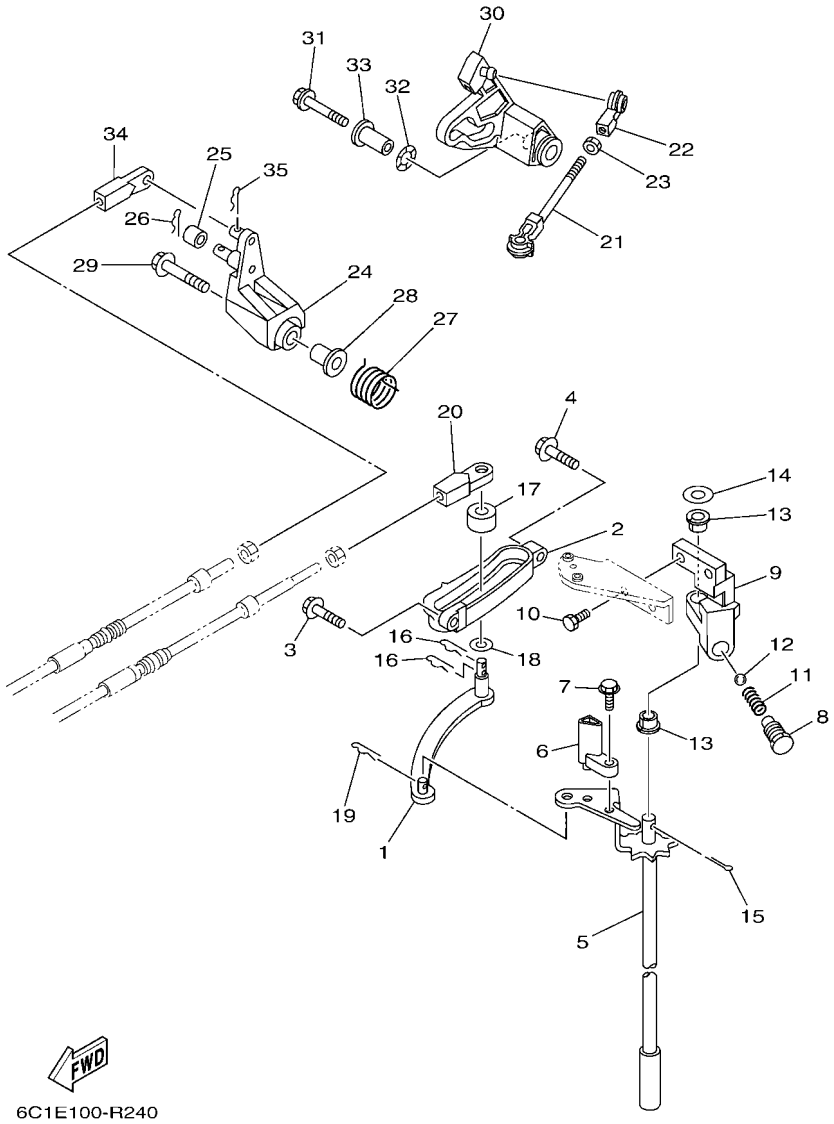

FIG. 21 CONTROL — COMMANDE

REF. NO.	PART NO. N° PIECES	DESCRIPTION DESCRIPTION	6C2M	6C6M				REMARKS REMARQUES
27	62Y–44135–00	SPRING RESSORT	1	1				
28	90387–06M45	COLLAR COLLERETTE	1	1				
29	90119–06297	BOLT, WITH WASHER BOULON, AVEC RONDELLE	1	1				
30	6C5–42335–00	LEVER, ACCEL. CONTROL LEVIER, ACCELERATION	1	1				
31	95D95–06035	BOLT, FLANGE DEEP RECESS BOULON FIXATION	1	1				
32	90206–10M04	WASHER, WAVE RONDELLE, ONDULEE	1	1				
33	90387–06M82	COLLAR COLLERETTE	1	1				
34	69W–48344–00	CABLE END, REMOTE CONTROL CHAPE CABLE	1	1				
35	90468–18008	CLIP JONC	1	1				

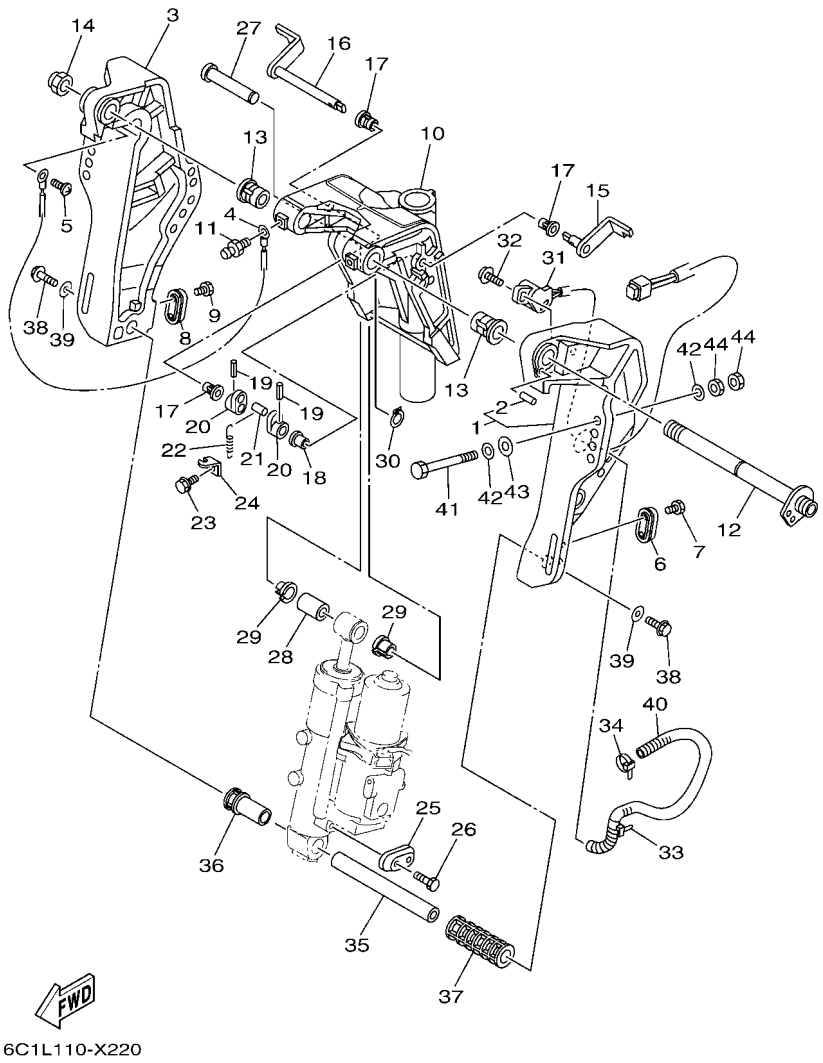

FIG. 22 BRACKET 1 SUPPORT 1

REF. NO.	PART NO. N° PIECES	DESCRIPTION DESCRIPTION	6C2M	6C6M				REMARKS REMARQUES
1	6C5–43111–10–8D	BRACKET, CLAMP 1 PRESSE 1	1	1				FOR TILT LIMIT FOR TILT LIMIT
2	93606–19002	.PIN, DOWEL .GOUPILLE	1	1				
3	6C5–43112–01–8D	BRACKET, CLAMP 2 PRESSE 2	1	1				
4	6E5–82148–00	WIRE, LEAD 4 FIL 4	1	1				
5	97885–06008	SCREW, PAN HEAD VIS, A ENCOCHE	1	1				
6	65W–45251–00	ANODE ANODE	1	1				
7	90101–06020	BOLT BOULON	2	2				
8	65W–45251–00	ANODE ANODE	1	1				
9	90101–06020	BOLT BOULON	2	2				
10	6C5–43311–01–8D	BRACKET, SWIVEL 1 SUPPORT, PIVOT 1	1	1				
11	93700–06002	NIPPLE, GREASE PION	3	3				
12	6C5–43131–00	BOLT, CLAMP BRACKET BOULON, PRESSE	1	1				FOR TILT LIMIT FOR TILT LIMIT
13	90386–22MA4	BUSH DOUILLE	2	2				
14	90185–22M11	NUT, SELF-LOCKING ECROU,AUTO-BLOQUANT	1	1				FOR TILT LIMIT FOR TILT LIMIT
15	6C5–43181–00	LEVER, TILT STOP 1 LEVIER VERROUILLAGE RELEVAGE 1	1	1				
16	6C5–43185–00	LEVER, TILT STOP 2 LEVIER VERROUILLAGE RELEVAGE 2	1	1				
17	90386–10M16	BUSH DOUILLE	3	3				
18	90386–10025	BUSH DOUILLE	1	1				
19	91690–30020	PIN, SPRING AGRAFFE	2	2				
20	6G5–43148–00	COLLAR, DISTANCE ENTRETOISE	2	2				
21	90249–06M19	PIN GOUPILLE	1	1				
22	90506–14M24	SPRING, TENSION RESSORT, TENSION	1	1				
23	97E95–06512	BOLT, HEXAGON W/W DEEP RECESS VIS HEXAGONAL AVC RONDELLE	1	1				
24	6G5–43144–00	HOOK, SPRING CROCHET	1	1				
25	65W–45251–00	ANODE ANODE	1	1				
26	90101–06020	BOLT BOULON	2	2				
27	6E5–43126–02	PIN, UPPER SHOCK MOUNT AXE, SUPERIEUR AMORTISSEUR	1	1				

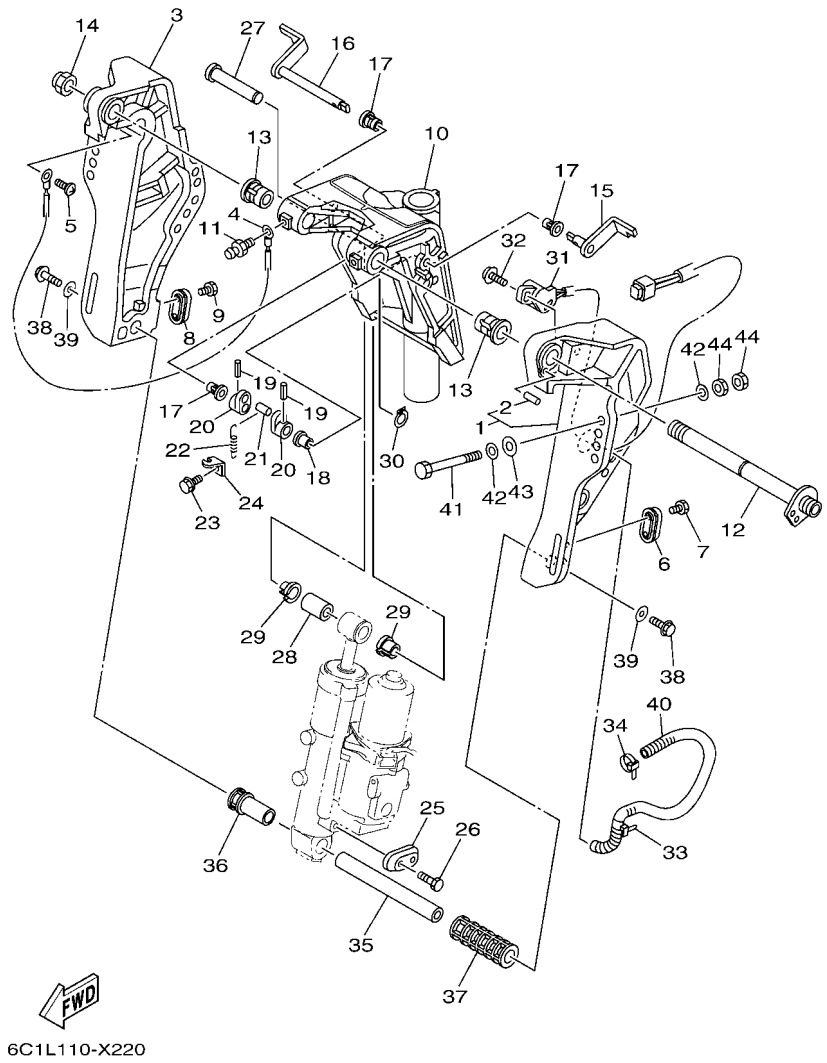

FIG. 22 BRACKET 1 — SUPPORT 1

REF. NO.	PART NO. N° PIECES	DESCRIPTION DESCRIPTION	6C2M	6C6M				REMARKS REMARQUES
28	90386–18M92	BUSH DOUILLE	1	1				
29	90386–18M35	BUSH DOUILLE	2	2				
30	93410–18M05	CIRCLIP CIRCLIP	1	1				
31	63D–83672–11	TRIM SENDER INCLINER RACCORD	1	1				
32	97985–06216	SCREW, WITH WASHER VIS, AVEC RONDELLE	2	2				
33	90464–99004	CLAMP BRIDE	1	1				
34	90465–11M10	CLAMP BRIDE	1	1				
35	6CJ–43818–00	PIN, LOWER SHOCK MOUNT AXE, INFERIEUR AMORTISSEUR	1	1				
36	6C5–43833–00	PIPE TUYAU	1	1				
37	6C5–43834–00	PIPE TUYAU	1	1				
38	90119–10054	BOLT, WITH WASHER BOULON, AVEC RONDELLE	2	2				
39	90201–10060	WASHER, PLATE RONDELLE, PLATE	2	2				
40	90447–19009	TUBE DURITE	1	1				
41	90101–12063	BOLT (L:105MM) BOULON (L:105MM)	4	4				
42	90201–12062	WASHER, PLATE RONDELLE, PLATE	8	8				
43	90201–12426	WASHER, PLATE RONDELLE, PLATE	4	4				
44	95380–12600	NUT ECROU	8	8				

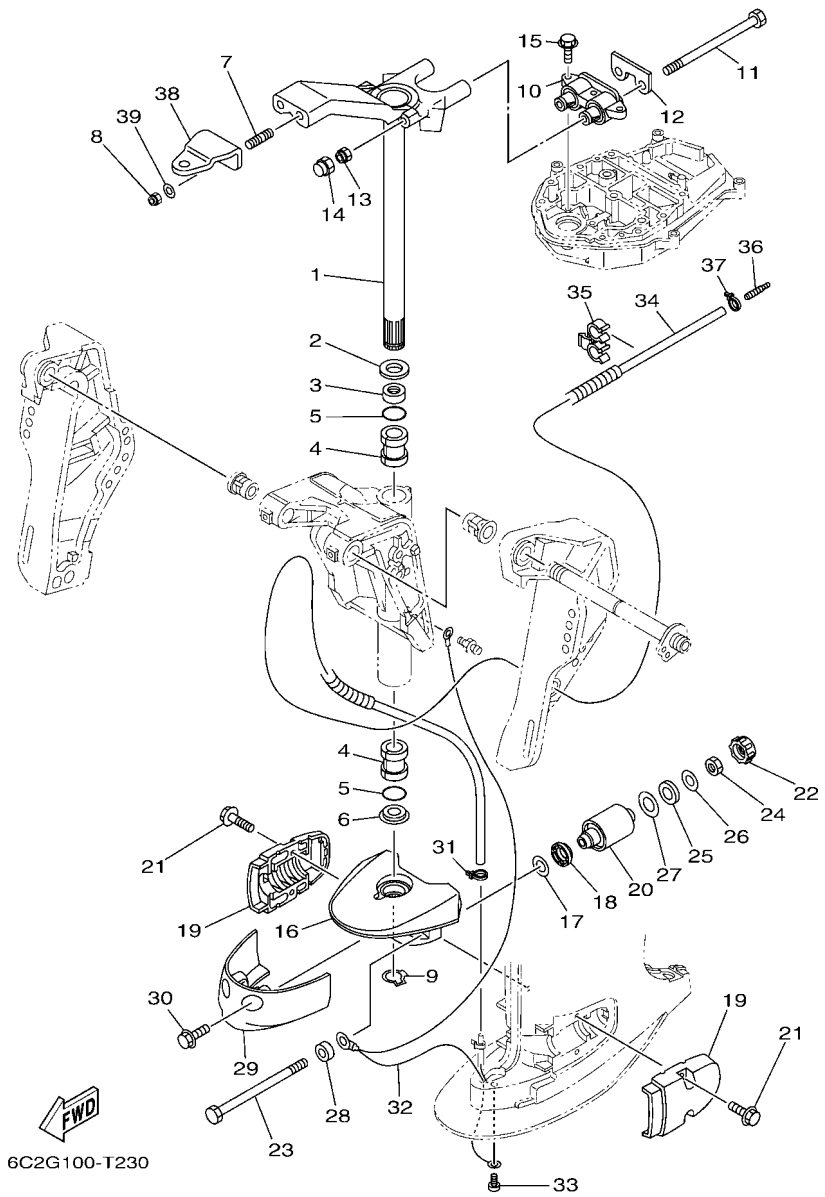

FIG. 23 BRACKET 2 — SUPPORT 2

REF. NO.	PART NO. N° PIECES	DESCRIPTION DESCRIPTION	6C2M	6C6M				REMARKS REMARQUES
1	69W–42510–01–8D	STEERING BRACKET ASSY DIRECTION SUPPORT (ENS.)	1	1				
2	90201–30M00	WASHER, PLATE RONDELLE, PLATE	1	1				
3	90386–30M78	BUSH DOUILLE	1	1				
4	90386–30M77	BUSH DOUILLE	2	2				
5	93210–29M94	O-RING JOINT TORIQUE	2	2				
6	90386–30M60	BUSH DOUILLE	1	1				
7	90116–10063	BOLT, STUD GOUJON	2	2				
8	90185–10027	NUT, SELF-LOCKING ECROU,AUTO-BLOQUANT	2	2				
9	93410–28M06	CIRCLIP CIRCLIP	1	1				
10	64J–44514–00	MOUNT DAMPER, UPPER SIDE SILENT-BLOC, SUPERIEUR LATERAL	1	1				
11	90109–08229	BOLT BOULON	2	2				
12	69W–44526–01	PLATE PLAQUE	1	1				
13	90185–08018	NUT, SELF-LOCKING ECROU,AUTO-BLOQUANT	2	2				
14	6C5–44194–00	CAP CAPUCHON	2	2				
15	97E75–08530	BOLT, HEXAGON W/W DEEP RECESS VIS HEXAGONAL AVC RONDELLE	3	3				
16	69W–44551–00–8D	HOUSING, LOWER MOUNT RUBBER 1 BOITIER, SILENT-BLOC INFERIEUR	1	1				
17	90201–12M16	WASHER, PLATE RONDELLE, PLATE	2	2				
18	6C5–43885–01	GROMMET PASSE-FIL	2	2				
19	6C5–44552–00–8D	HOUSING, LOWER MOUNT RUBBER 2 BOITIER, SILENT-BLOC INFERIEUR	2	2				
20	69W–44555–00	MOUNT DAMPER, LOWER SIDE SILENT-BLOC, INFERIEUR LATERAL	2	2				
21	90119–08094	BOLT, WITH WASHER BOULON, AVEC RONDELLE	4	4				
22	6C5–44575–00	DAMPER, LOWER MOUNT RUBBER SILENT-BLOC, INFERIEUR	2	2				
23	90109–12MA3	BOLT BOULON	2	2				
24	95380–12700	NUT ECROU	2	2				
25	90202–21100	WASHER, PLATE RONDELLE, PLATE	2	2				
26	90201–13M19	WASHER, PLATE RONDELLE, PLATE	2	2				
27	90201–22M05	WASHER, PLATE RONDELLE, PLATE	2	2				

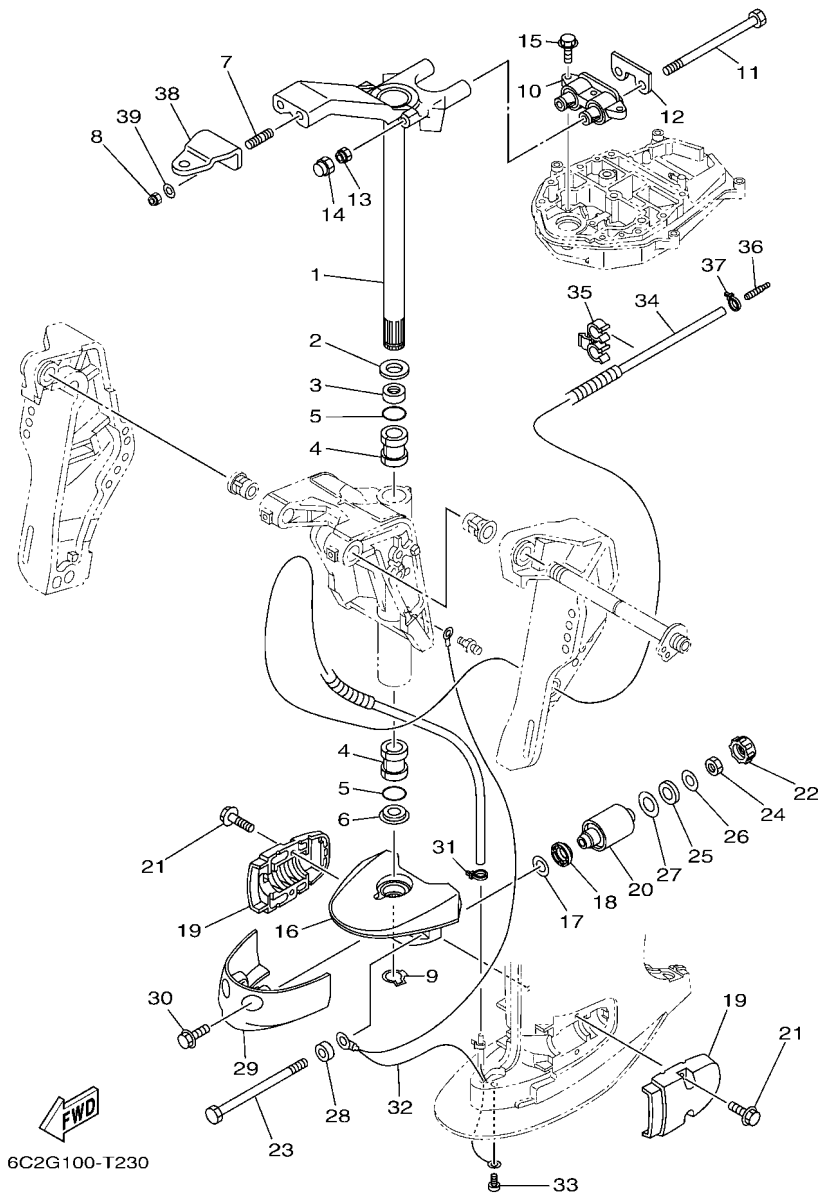

FIG. 23 BRACKET 2 — SUPPORT 2

REF. NO.	PART NO. N° PIECES	DESCRIPTION DESCRIPTION	6C2M	6C6M				REMARKS REMARQUES
28	90387–12057	COLLAR COLLERETTE	2	2				
29	67C–44553–00–8D	COVER, LOWER MOUNT COUVERCLE, SUSPENSION INFERIEU	1	1				
30	97E95–08520	BOLT, HEXAGON W/W DEEP RECESS VIS HEXAGONAL AVC RONDELLE	2	2				
31	90465–11M10	CLAMP BRIDE	1	1				
32	67C–82127–10	WIRE, LEAD 2 FIL 2	1	1				
33	97885–06008	SCREW, PAN HEAD VIS, A ENCOCHE	1	1				
34	6CJ–44385–00	HOSE, WATER 1 TUBE D'EAU 1	1	1				
35	90464–10006	CLAMP BRIDE	1	1				
36	6E5–83558–00	END, NIPPLE RACCORD DE NIPPLE	1	1				
37	90465–11M10	CLAMP BRIDE	1	1				
38	65W–48511–01	HOOK, STEERING ATTACHE, DIRECTION	1	1				
39	90201–10049	WASHER, PLATE RONDELLE, PLATE	2	2				

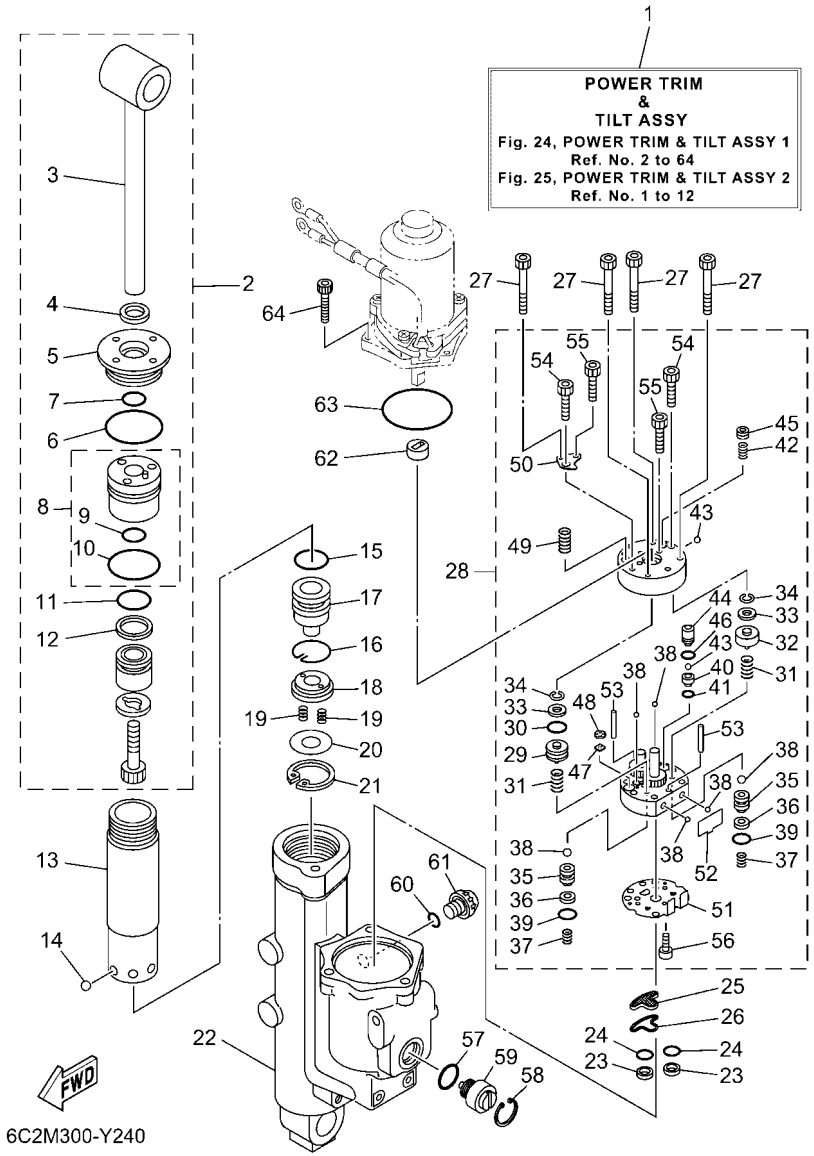

FIG. 24 POWER TRIM & TILT ASSY 1 — PUISSANCE PARER ET INCLINER 1

REF. NO.	PART NO. N° PIECES	DESCRIPTION DESCRIPTION	6C2M	6C6M				REMARKS REMARQUES
1	6C5–43800–13	POWER TRIM & TILT ASSY PUISSANCE PARER ET INCLINER (E	1	1				
2	6CJ–43810–10	TILT PISTON SUB ASSY INCLINER PISTON AUXILIAIRE(ENS	1	1				
3	6CJ–43801–10	.ROD .TIGE	1	1				
4	62Y–43822–00	.SEAL, TRIM DUST .JOINT	1	1				
5	6CJ–43821–10	.SCREW, TRIM CYLINDER END .VIS	1	1				
6	93210–49001	.O-RING .JOINT TORIQUE	1	1				
7	6CJ–43863–00	.O-RING .JOINT TORIQUE	1	1				
8	6CJ–4380R–10	.CYLINDER END SUB ASSY .CYLINDRE RACCORD (ENS.)	1	1				
9	6CJ–43863–00	..O-RING ..JOINT TORIQUE	1	1				
10	93210–44006	..O-RING ..JOINT TORIQUE	1	1				
11	6C5–43861–00	.O-RING .JOINT TORIQUE	1	1				
12	6C5–43871–00	.RING, BACK UP .SEGMENT	1	1				
13	6CJ–22471–10	CYLINDER, SHOCK ABSORBER CYLINDRE, AMORTISSEUR	1	1				
14	93503–16003	BALL BILLES	6	6				
15	6C5–43861–00	O-RING JOINT TORIQUE	1	1				
16	6C5–43875–00	RING, SNAP RESSORT	1	1				
17	6CJ–4381B–10	FREE PISTON SUB ASSY PISTON AUXILIAIRE (ENS.)	1	1				
18	6C5–43899–00	PLATE STOPPER PLAQUETTE	1	1				
19	62X–4384H–00	SPRING RESSORT	2	2				
20	6C5–22435–00	PLATE, VALVE 2 PLAQUE, CLAPET 2	1	1				
21	99009–32500	CIRCLIP CIRCLIP	1	1				
22	6C5–4380K–12	CYLINDER, TILT SUB ASSY CYLINDRE	1	1				
23	6C5–43817–10	FILTER 2 FILTRE 2	2	2				
24	69J–4389J–00	O-RING JOINT TORIQUE	2	2				
25	6C5–43816–00	FILTER 1 FILTRE 1	1	1				
26	6C5–4380G–00	PLATE PLAQUE	1	1				
27	91318–05045	BOLT BOULON	4	4				

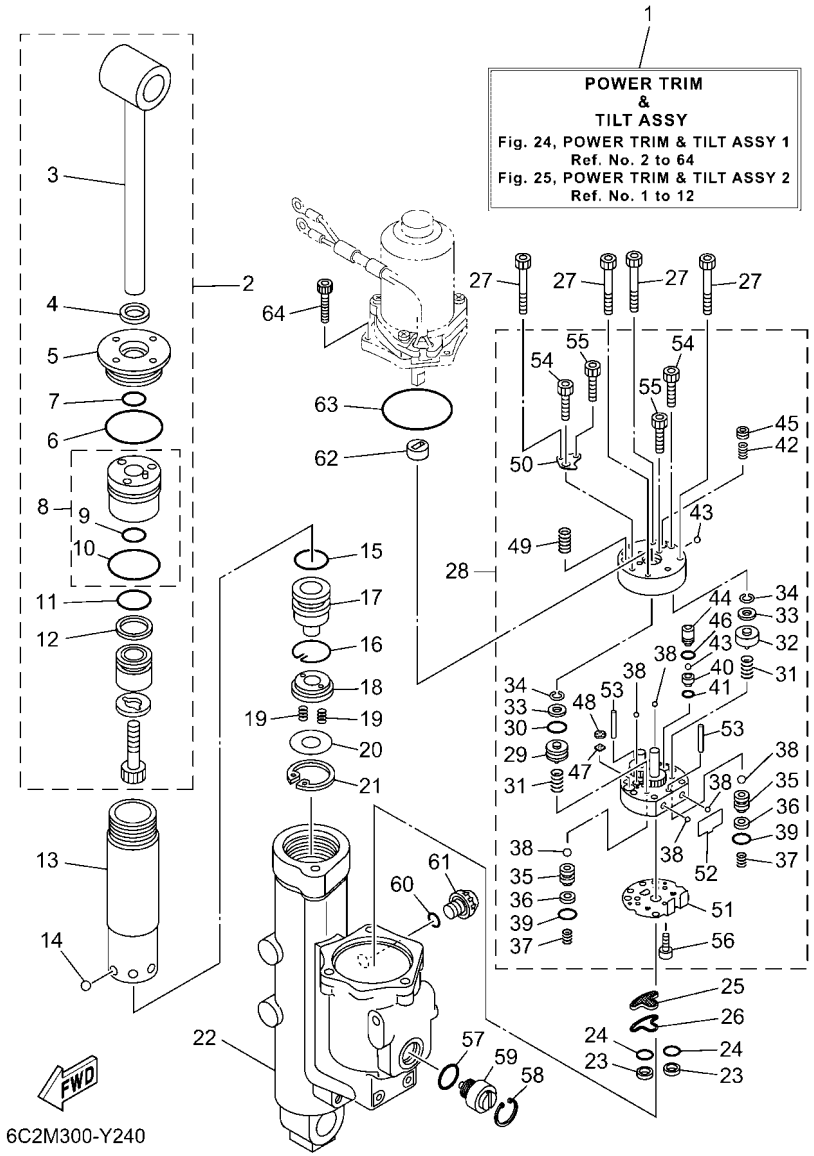

FIG. 24 POWER TRIM & TILT ASSY 1 — PUISSANCE PARER ET INCLINER 1

REF. NO.	PART NO. N° PIECES	DESCRIPTION DESCRIPTION	6C2M	6C6M				REMARKS REMARQUES
28	6C5–43830–10	GEAR PUMP ASSY POMPE A PIGNON (ENS.)	1	1				
29	6D8–43841–00	.PISTON, SHUTTLE .PISTON	1	1				
30	6H1–43883–00	.O-RING .JOINT TORIQUE	1	1				
31	69J–43894–00	.SPRING, SHUTTLE RETURN .RESSORT	2	2				
32	6D8–4384M–00	.PISTON, SHUTTLE 2 .PISTON 2	1	1				
33	69A–4384F–00	.SEAL, MAIN VALVE .JOINT	2	2				
34	99002–03600	.CIRCLIP .CIRCLIP	2	2				
35	6EK–4382E–00	.ADAPTOR 2 .ADAPTEUR 2	2	2				
36	6C6–4387G–00	.WASHER .RONDELLE	2	2				
37	6C6–43853–00	.SPRING, MAIN VALVE .RESSORT	2	2				
38	93505–32038	.BALL .BILLE	6	6				
39	69J–4389J–00	.O-RING .JOINT TORIQUE	2	2				
40	6D8–43851–00	.SEAT, RELIEF VALVE .SIEGE	1	1				
41	93210–064A5	.O-RING .JOINT TORIQUE	1	1				
42	6C5–43855–10	.SPRING, UP RELIEF .RESSORT	1	1				
43	93501–08001	.BALL .BILLE	2	2				
44	6D8–43844–00	.PIN, VALVE SUPPORT .GOUPILLE	1	1				
45	6D8–43843–00	.SCREW, VALVE LOCK .VIS	1	1				
46	93210–04N51	.O-RING .JOINT TORIQUE	1	1				
47	6H1–4384G–11	.SEAL, RELIEF VALVE .JOINT	1	1				
48	6H1–43844–10	.PIN, VALVE SUPPORT .GOUPILLE	1	1				
49	6C5–43856–10	.SPRING, DOWN RELIEF .RESSORT	1	1				
50	6D8–4382L–00	.CAP, RELIEF VALVE .CAPUCHON	1	1				
51	6C5–43895–00	.SEAT, RELIEF VALVE .SIEGE	1	1				
52	6C5–43854–00	.SPRING, MANUAL RELEASE .RESSORT	1	1				
53	93604–26256	.PIN, DOWEL .CLAVETTE	2	2				
54	91318–05030	.BOLT .BOULON	2	2				

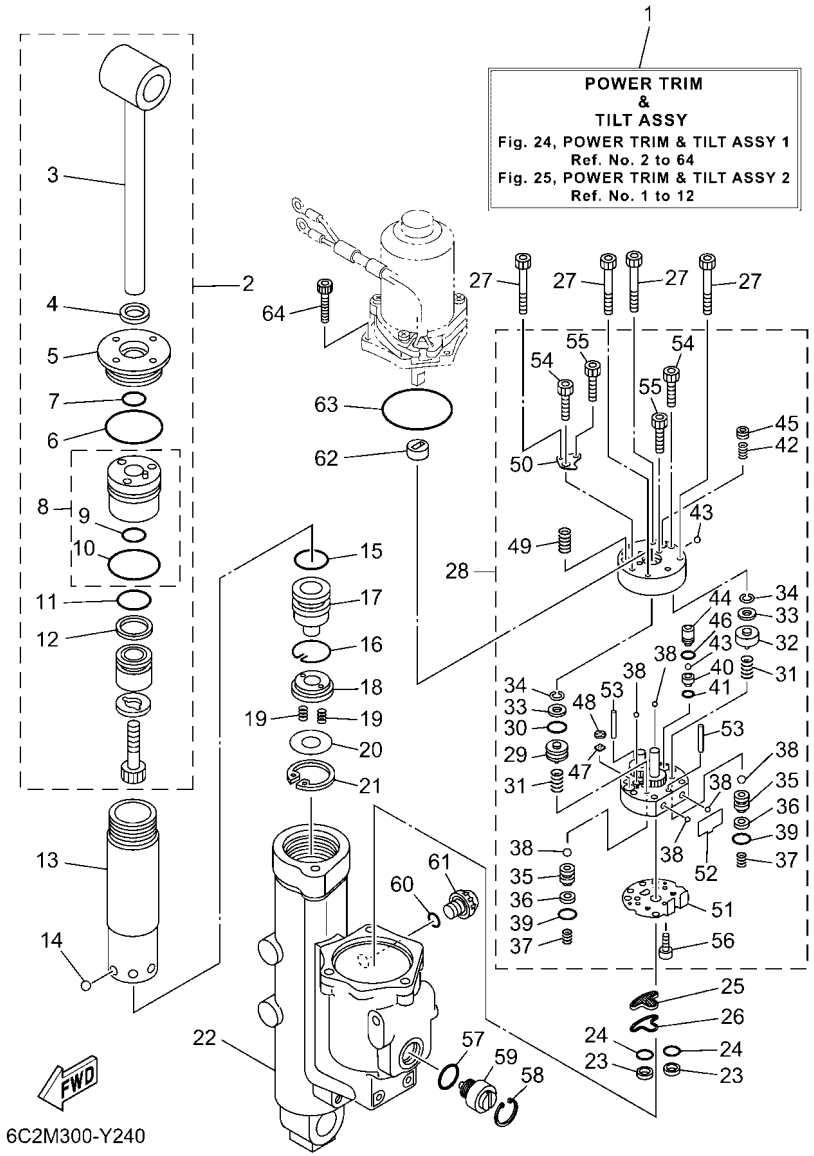

FIG. 24 POWER TRIM & TILT ASSY 1 — PUISSANCE PARER ET INCLINER 1

REF. NO.	PART NO. N° PIECES	DESCRIPTION DESCRIPTION	6C2M	6C6M				REMARKS REMARQUES
55	91318–03025	.BOLT .BOULON	2	2				
56	91318–03005	.BOLT .BOULON	1	1				
57	6D8–43863–00	O-RING JOINT TORIQUE	1	1				
58	6H1–43875–00	RING, SNAP RESSORT	1	1				
59	6CJ–43845–10	SCREW, MANUAL RELEASE VIS	1	1				
60	6CJ–43861–10	O-RING JOINT TORIQUE	1	1				
61	6CJ–43829–20	PLUG, RESERVOIR BOUCHON	1	1				
62	6C5–43831–00	CONNECTOR, SHAFT RACCORD	1	1				
63	93210–64488	O-RING JOINT TORIQUE	1	1				
64	91380–05020	BOLT BOULON	3	3				

FIG. 25 POWER TRIM & TILT ASSY 2 — PUISSANCE PARER ET INCLINER 2

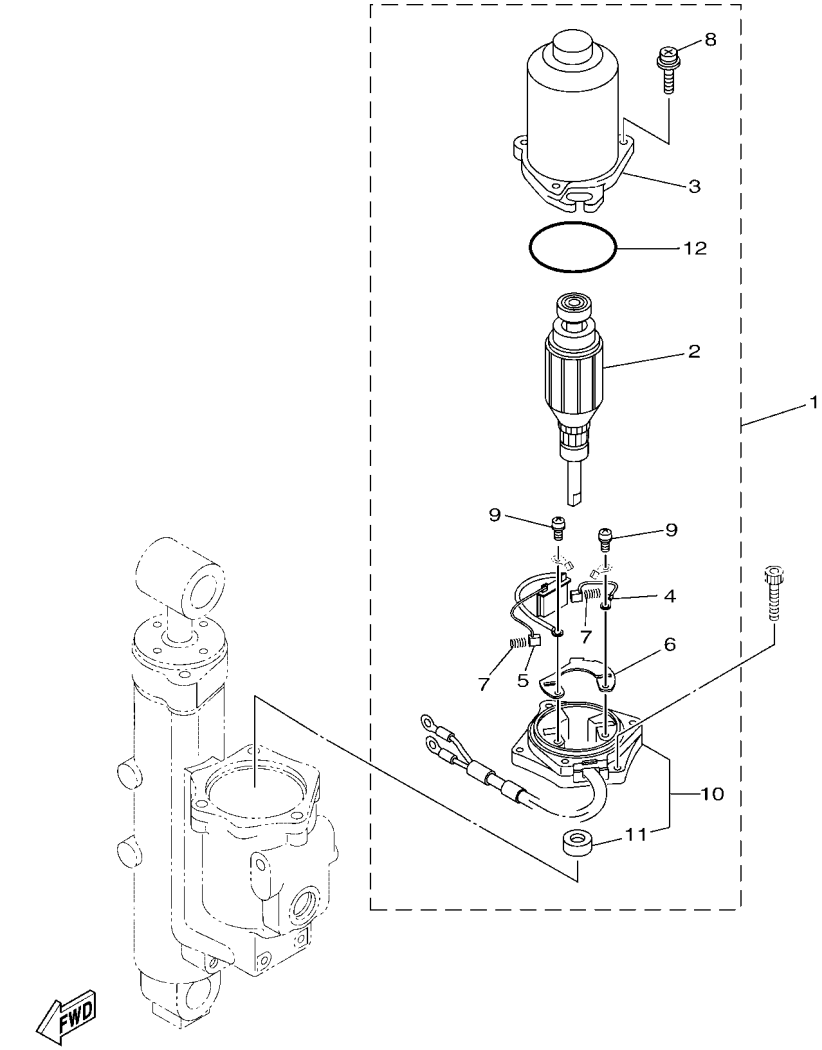

REF. NO.	PART NO. N° PIECES	DESCRIPTION DESCRIPTION	6C2M	6C6M				REMARKS REMARQUES
1	6CJ–43880–13	MOTOR ASSY MOTEUR (ENS.)	1	1				
2	6CJ–43805–11	.ARMATURE ASSY .INDUIT (ENS.)	1	1				
3	6CJ–43804–11	.STATOR ASSY .STATOR (ENS.)	1	1				
4	6EK–43892–00	.BRUSH 2 .BALAI 2	1	1				
5	6CJ–82181–10	.CIRCUIT BREAKER COMP. .RUPTEUR COMPLET	1	1				
6	6EK–4380F–00	.PLATE, BRUSH HOLDER .PLAQUE	1	1				
7	62X–4386K–00	.SPRING, BRUSH .RESSORT, BALAI	2	2				
8	6CJ–43879–10	.SCREW, WITH WASHER .VIS, AVEC RONDELLE	3	3				
9	97602–04316	.SCREW, PAN HEAD WITH WASHER .VIS, AVEC RONDELLE	2	2				
10	6CJ–43881–10	.FRAME, END .BATI	1	1				
11	6EK–43882–00	..OIL SEAL ..JOINT SPI	1	1				
12	6CJ–43862–11	.O-RING .JOINT TORIQUE	1	1				

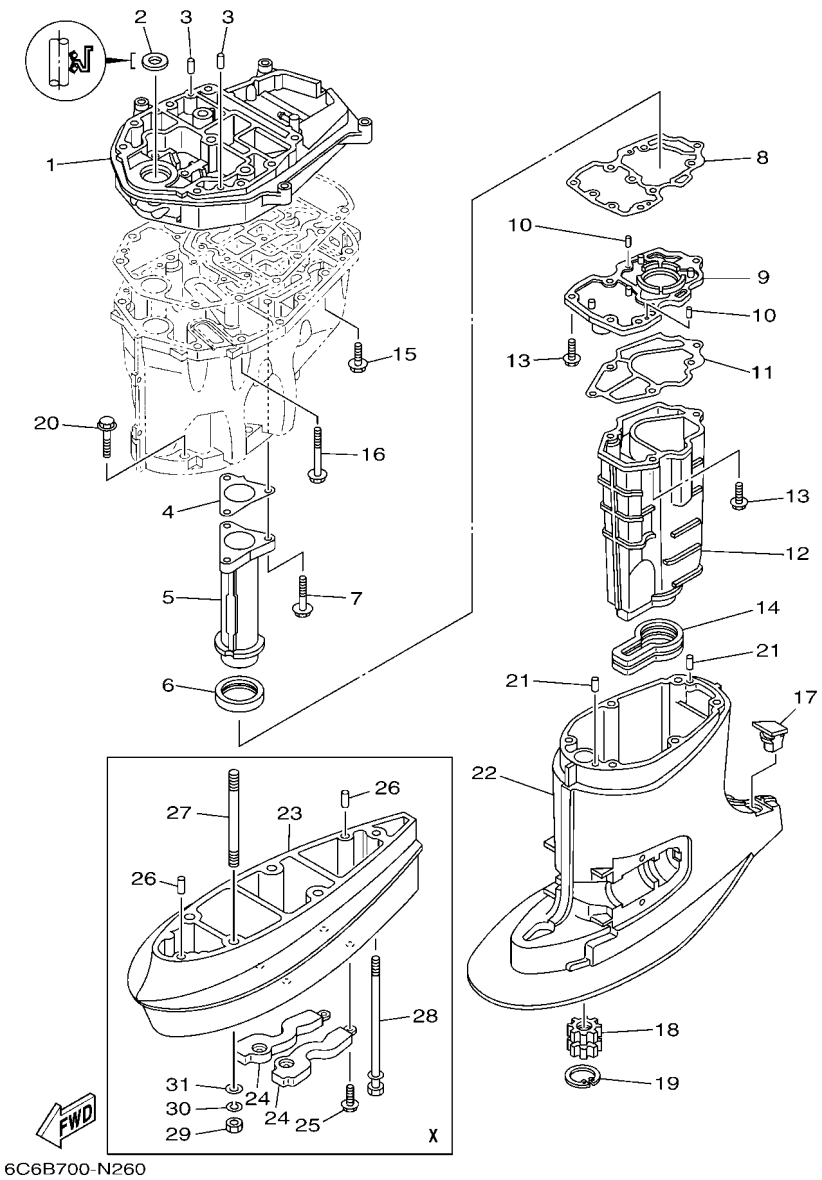

6C6B700-N260

FIG. 26 UPPER CASING — FOURREAU

REF. NO.	PART NO. N° PIECES	DESCRIPTION DESCRIPTION	6C2M	6C6M				REMARKS REMARQUES
1	6C5–41137–03	GUIDE, EXHAUST COLLECTEUR D'ECHAPPEMENT	1	1				
2	93103–18011	OIL SEAL JOINT SPY	1	1				
3	93608–12M05	PIN, DOWEL AXE	2	2				
4	6C5–41133–00	GASKET, EXHAUST MANIFOLD 1 JOINT, PIPE D'ECHAPPEMENT	1	1				
5	6C5–41131–00–CA	MANIFOLD, EXT. 1 PIPE D'ECHAPPEMENT	1	1				
6	6C5–46132–00	GASKET 1 JOINT 1	1	1				
7	90119–06261	BOLT, WITH WASHER BOULON, AVEC RONDELLE	3	3				
8	6C5–41134–00	GASKET, EXHAUST MANIFOLD JOINT, PIPE D'ECHAPPEMENT	1	1				
9	6C5–45181–00–CA	PLATE PLAQUETTE	1	1				
10	93604–10M03	PIN, DOWEL CLAVETTE	2	2				
11	6C5–41135–00	GASKET, EXHAUST MANIFOLD JOINT, PIPE D'ECHAPPEMENT	1	1				
12	6C5–14711–00–CA	MUFFLER 1 POT D'ECHAPPEMENT 1	1	1				
13	97E75–06525	BOLT, HEXAGON W/W DEEP RECESS VIS HEXAGONAL AVC RONDELLE	6	6				
14	6C5–45123–00	GASKET, MUFFLER JOINT, POT DE DETENTE	1	1				
15	90119–08182	BOLT, WITH WASHER BOULON, AVEC RONDELLE	4	4				
16	90119–08202	BOLT, WITH WASHER BOULON, AVEC RONDELLE	8	8				
17	6C5–45155–02	CAP CAPUCHON	1	1				
18	69W–45318–00	BUSHING, DRIVE SHAFT DOUILLE, ARBRE MOTEUR	1	1				
19	93420–36M01	CIRCLIP CIRCLIP, TYPE S	1	1				
20	97E75–10545	BOLT, HEXAGON W/W DEEP RECESS VIS HEXAGONAL AVC RONDELLE	6	6				
21	93606–12019	PIN, DOWEL GOUPILLE	2	2				
22	6C5–45111–00–8D	CASING, UPPER FOURREAU	1	1				
23	6C5–45211–00–8D	EXTENSION EXTENSION		1				X(25.4") X(25.4")
24	6C5–45213–01	COVER, EXTENSION COUVERCLE EXTENSION		2				X(25.4") X(25.4")
25	97E75–06520	BOLT, HEXAGON W/W DEEP RECESS VIS HEXAGONAL AVC RONDELLE		4				X(25.4") X(25.4")
26	93606–12019	PIN, DOWEL GOUPILLE		2				X(25.4") X(25.4")
27	90116–10M53	BOLT, STUD GOUJON		4				X(25.4") X(25.4")

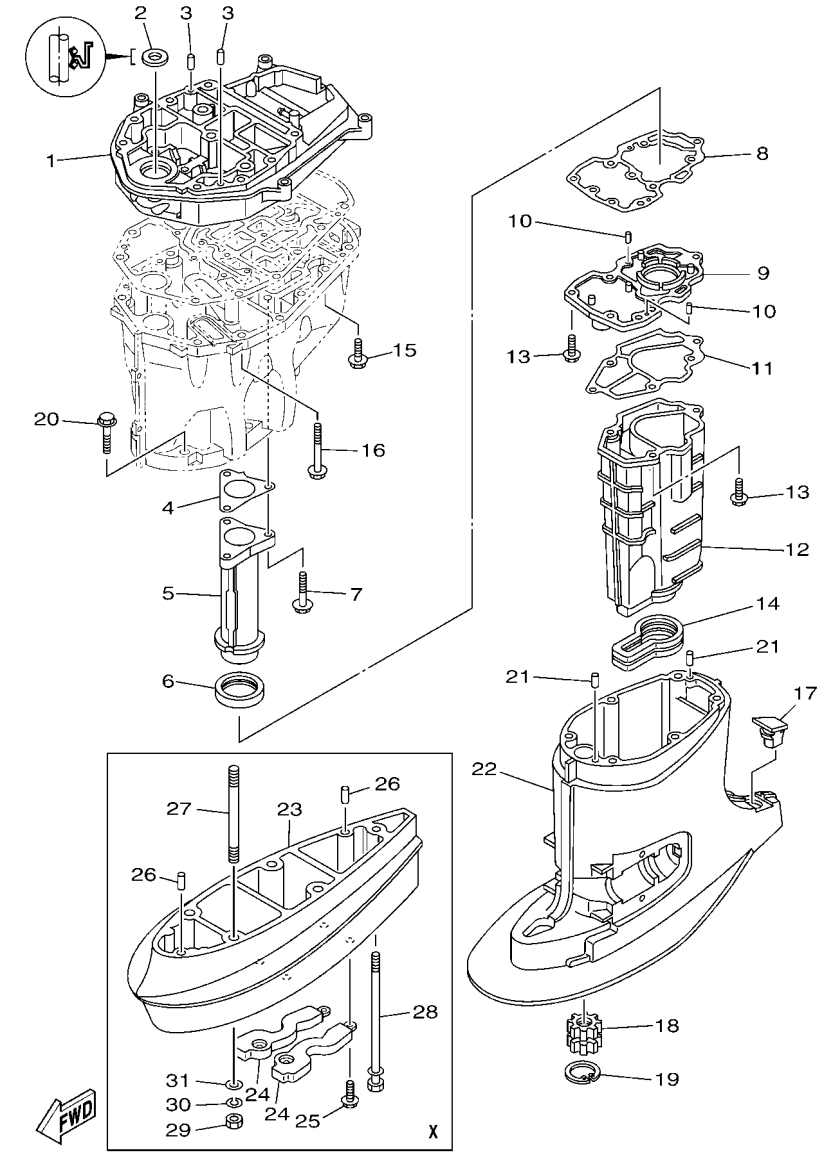

6C6B700-N260

FIG. 26 UPPER CASING — FOURREAU

REF. NO.	PART NO. N° PIECES	DESCRIPTION DESCRIPTION	6C2M	6C6M				REMARKS REMARQUES
28	90119–08M00	BOLT, WITH WASHER BOULON, AVEC RONDELLE		1				X(25.4") X(25.4")
29	95380–10600	NUT ECROU		4				X(25.4") X(25.4")
30	92990–10100	WASHER, SPRING RONDELLE, GROWER		4				X(25.4") X(25.4")
31	92995–10600	WASHER RONDELLE		4				X(25.4") X(25.4")

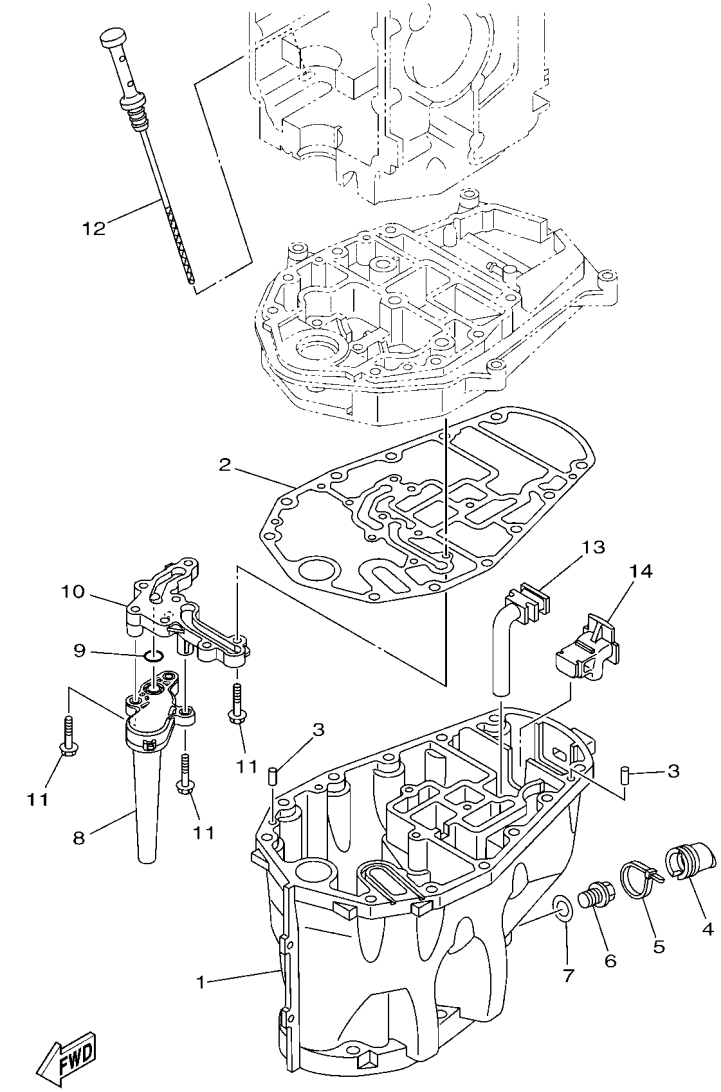

6C1A100-M300

FIG. 27 OIL PAN — VENTILATEUR D'HUILE

REF. NO.	PART NO. N° PIECES	DESCRIPTION DESCRIPTION	6C2M	6C6M				REMARKS REMARQUES
1	6C5–15311–02	OIL PAN VENTILATEUR D'HUILE	1	1				
2	6C5–15312–01	GASKET, OIL PAN JOINT DE VENTILATEUR D'HUILE	1	1				
3	93606–12019	PIN, DOWEL GOUPILLE	2	2				
4	6CJ–15316–01	DAMPER 1 AMORTISSEUR 1	1	1				
5	90465–11M59	CLAMP BRIDE	1	1				
6	90340–14M06	PLUG, STRAIGHT SCREW PLOT, FILETE DROIT	1	1				
7	90430–14M09	GASKET JOINT	1	1				
8	6CJ–13411–10	STRAINER, OIL FILTRE, HUILE	1	1				
9	93210–12790	O-RING JOINT TORIQUE	1	1				
10	6CJ–15333–10	COVER COUVERCLE	1	1				
11	95812–06025	BOLT, FLANGE BOULON	9	9				
12	6C5–15362–00	PLUG, OIL LEVEL PLOT, NIVEAU D'HUILE	1	1				
13	6C5–45135–10	PIPE TUYAU	1	1				
14	6C5–45136–10	PIPE DURITE	1	1				

FIG. 28 LOWER CASING & DRIVE 1 — BOITIER D'HELICE TRANSMISSION1

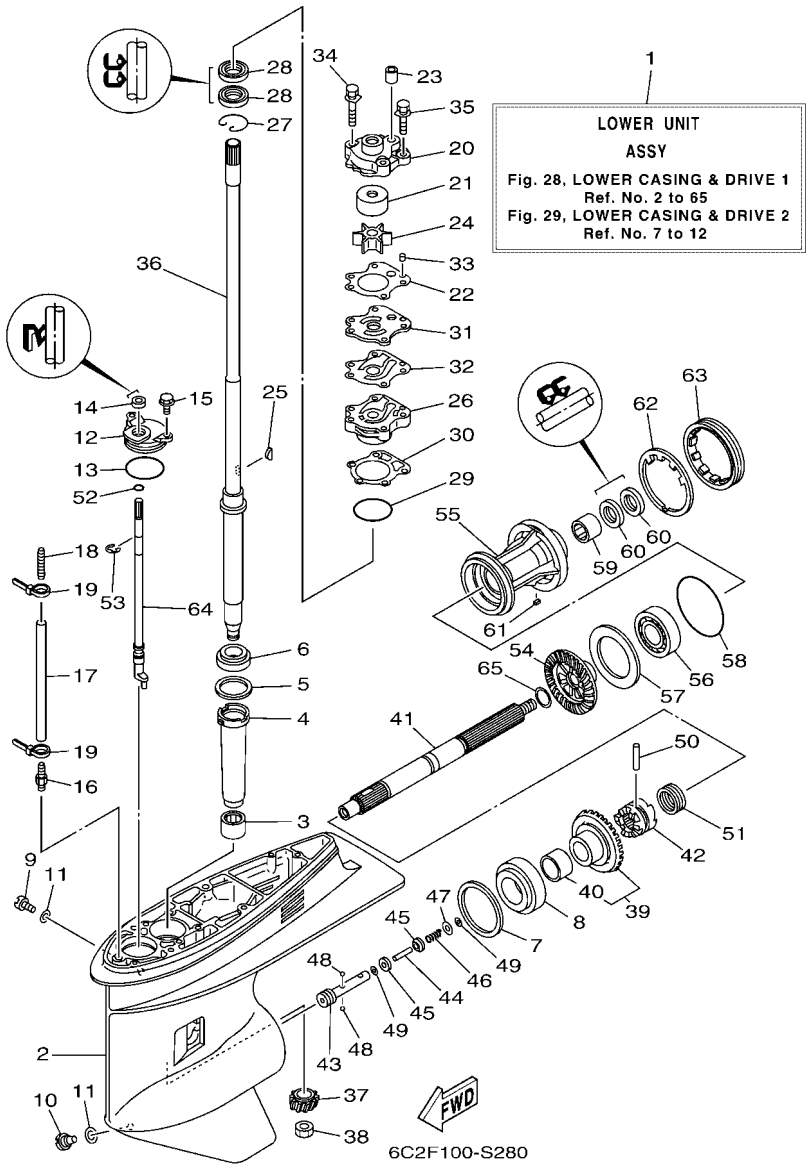

REF. NO.	PART NO. N° PIECES	DESCRIPTION DESCRIPTION	6C2M	6C6M				REMARKS REMARQUES
1	68S–45300–34–8D	LOWER UNIT ASSY UNITE INFERIEURE (ENS.)	1	1				L(20.9") L(20.9")
	68S–45300–44–8D	LOWER UNIT ASSY UNITE INFERIEURE (ENS.)		1				X(25.4") X(25.4")
2	67F–45301–00–8D	CASING, LOWER BEQUILLE	1	1				
3	93315–52563	BEARING ROULEMENT	1	1				
4	688–45536–01	SLEEVE, DRIVE SHAFT MANCHON, ARBRE MOTEUR	1	1				
5	688–45587–01	SHIM (T:0.10MM) CALE (T:0.10MM)	1	1				UR UR
	688–45587–10	SHIM (T:0.12MM) CALE (T:0.12MM)	1	1				UR UR
	688–45587–20	SHIM (T:0.15MM) CALE (T:0.15MM)	1	1				UR UR
	688–45587–30	SHIM (T:0.18MM) CALE (T:0.18MM)	1	1				UR UR
	688–45587–40	SHIM (T:0.30MM) CALE (T:0.30MM)	1	1				UR UR
	688–45587–50	SHIM (T:0.40MM) CALE (T:0.40MM)	1	1				UR UR
	688–45587–60	SHIM (T:0.50MM) CALE (T:0.50MM)	1	1				UR UR
6	93332–000U3	BEARING ROULEMENT	1	1				
7	688–45567–01	SHIM (T:0.10MM) CALE (T:0.10MM)	1	1				UR UR
	688–45567–10	SHIM (T:0.12MM) CALE (T:0.12MM)	1	1				UR UR
	688–45567–20	SHIM (T:0.15MM) CALE (T:0.15MM)	1	1				UR UR
	688–45567–30	SHIM (T:0.18MM) CALE (T:0.18MM)	1	1				UR UR
	688–45567–40	SHIM (T:0.30MM) CALE (T:0.30MM)	1	1				UR UR
	688–45567–50	SHIM (T:0.40MM) CALE (T:0.40MM)	1	1				UR UR
	688–45567–60	SHIM (T:0.50MM) CALE (T:0.50MM)	1	1				UR UR
8	93332–00095	BEARING ROULEMENT	1	1				
9	90340–08002	PLUG, STRAIGHT SCREW PLOT, FILETE DROIT	1	1				
10	688–45341–10	PLUG, DRAIN BOUCHON DE VIDANGE	1	1				
11	90430–08003	GASKET JOINT	2	2				
12	688–45321–00	PLATE PLAQUETTE	1	1				
13	93210–49046	O-RING JOINT TORIQUE	1	1				
14	93106–09014	OIL SEAL JOINT SPY	1	1				

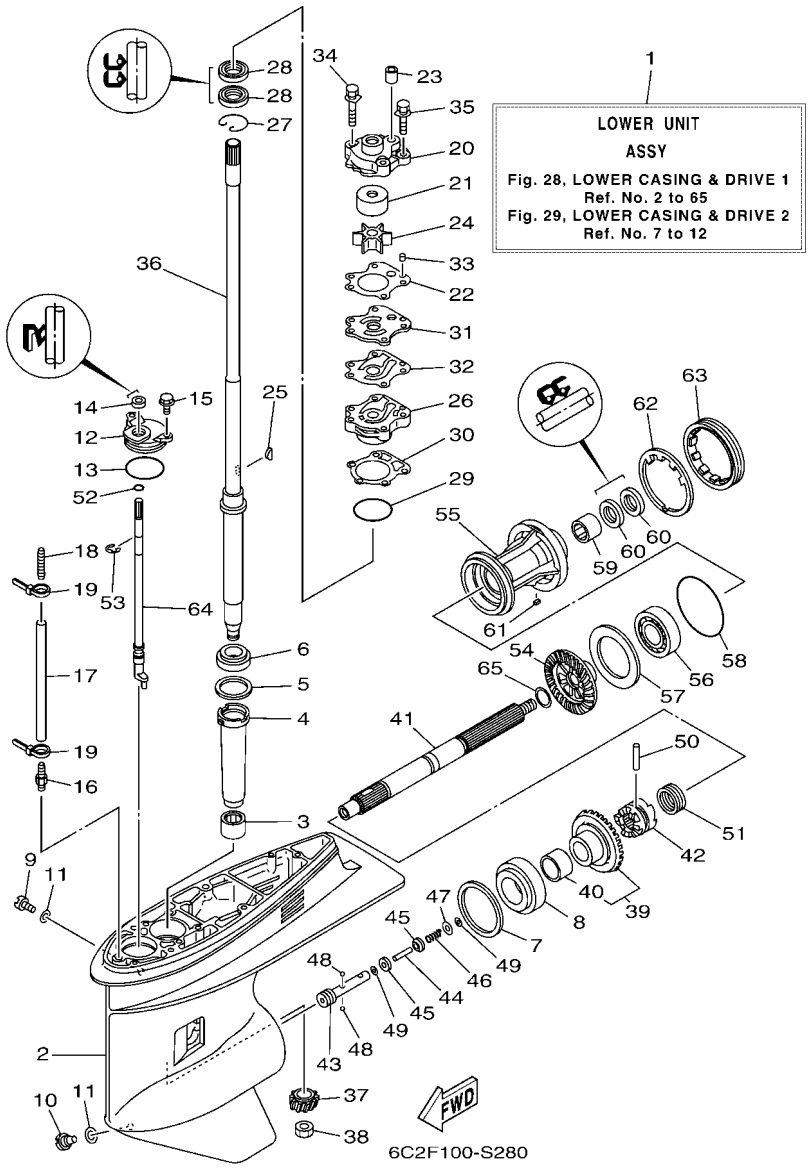

FIG. 28 LOWER CASING & DRIVE 1 — BOITIER D'HELICE TRANSMISSION1

REF. NO.	PART NO. N° PIECES	DESCRIPTION DESCRIPTION	6C2M	6C6M				REMARKS REMARQUES
15	97E95–06516	BOLT, HEXAGON W/W DEEP RECESS VIS HEXAGONAL AVC RONDELLE	2	2				
16	6E5–45378–00	NIPPLE, HOSE RACCORD, TUYAU	1	1				
17	90445–07ME8	HOSE (L80) DURITE (L80)	1	1				L(20.9") L(20.9")
	90445–07M31	HOSE (L200) DURITE (L200)		1				X(25.4") X(25.4")
18	6E5–83558–10	END, NIPPLE RACCORD DE NIPPLE	1	1				
19	90465–11M10	CLAMP BRIDE	2	2				
20	6H3–44311–00	HOUSING, WATER PUMP CORPS, POMPE A EAU	1	1				
21	663–44322–00	INSERT, CARTRIDGE CUVETTE	1	1				
22	6H3–44315–A0	GASKET, WATER PUMP JOINT, POMPE A EAU	1	1				
23	663–44366–01	DAMPER, WATER SEAL 2 JOINT, TUBE D'EAU 2	1	1				
24	6H3–44352–00	IMPELLER TURBINE	1	1				
25	90280–03M03	KEY, WOODRUFF CLAVETTE, DEMI-LUNE	1	1				
26	6H3–44341–01–CA	HOUSING, WATER PUMP CORPS, POMPE A EAU	1	1				
27	93450–40165	CIRCLIP CIRCLIP	1	1				
28	93101–23070	OIL SEAL JOINT SPY	2	2				
29	93210–46044	O-RING JOINT TORIQUE	1	1				
30	688–44316–A0	GASKET, WATER PUMP JOINT, POMPE A EAU	1	1				
31	6H3–44323–00	OUTER PLATE, CARTRIDGE PLAQUE EXTERIEURE	1	1				
32	6H3–44324–A0	GASKET, CARTRIDGE JOINT	1	1				
33	93604–10M03	PIN, DOWEL CLAVETTE	2	2				
34	90119–08194	BOLT, WITH WASHER BOULON, AVEC RONDELLE	2	2				
35	90119–08191	BOLT, WITH WASHER BOULON, AVEC RONDELLE	2	2				
36	64J–45501–30	DRIVE SHAFT COMP. ARBRE MOTEUR COMP.	1	1				L(20.9") L(20.9")
	64J–45501–40	DRIVE SHAFT COMP. ARBRE MOTEUR COMP.		1				X(25.4") X(25.4")
37	6K5–45551–00	PINION (12T) PIGNON D'ATTAQUE (12D)	1	1				
38	90170–16M01	NUT ECROU	1	1				
39	68S–45560–00	GEAR 1 (28T) PIGNON 1 (28T)	1	1				

FIG. 28 LOWER CASING & DRIVE 1 — BOITIER D'HELICE TRANSMISSION1

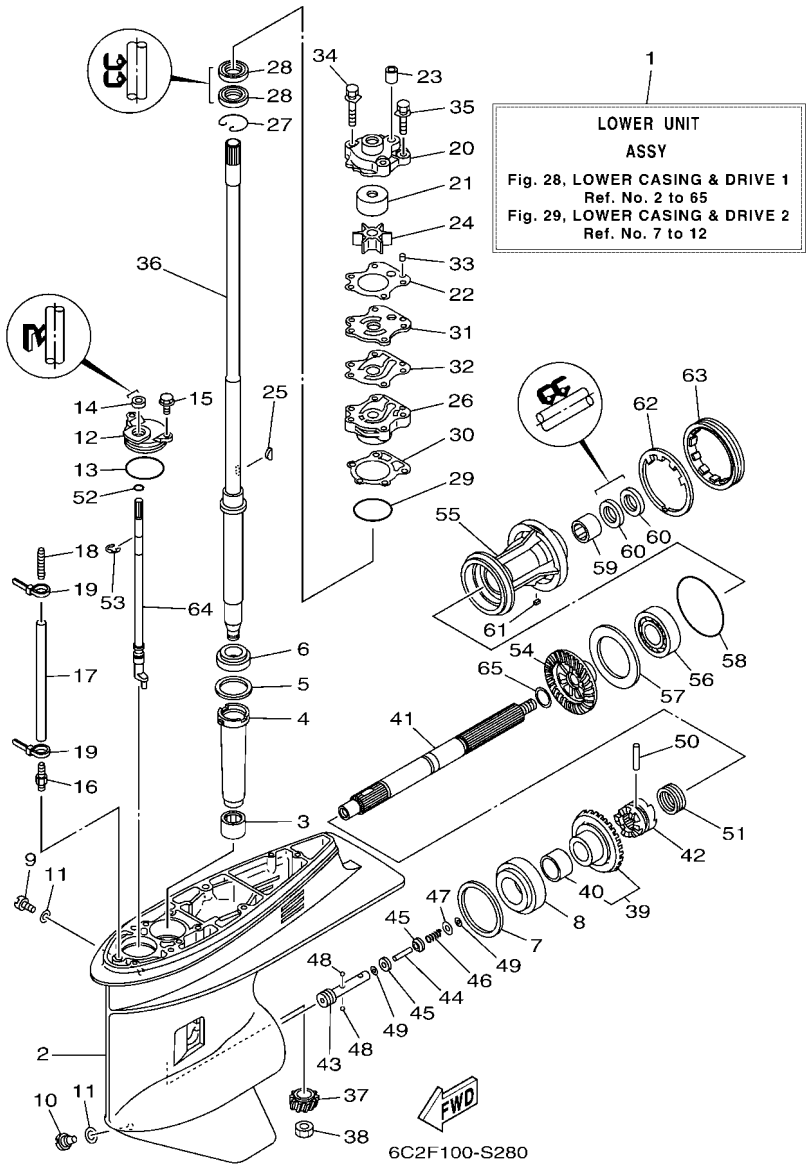

REF. NO.	PART NO. N° PIECES	DESCRIPTION DESCRIPTION	6C2M	6C6M				REMARKS REMARQUES
40	93317–322V0	.BEARING .ROULEMENT	1	1				
41	67F–45611–01	SHAFT, PROPELLER ARBRE, HELICE	1	1				
42	6D8–45631–00	CLUTCH, DOG CRABOT	1	1				
43	67F–45634–00	SLIDE, SHIFT CONTRE-POUSSOIR	1	1				
44	6H1–45668–00	SHAFT, FREE 1 AXE 1	1	1				
45	6H1–45635–00	PLUNGER, SHIFT POUSSOIR D'EMBRAYAGE	2	2				
46	90501–12M48	SPRING, COMPRESSION RESSORT, COMPRESSION	1	1				
47	90201–03313	WASHER, PLATE RONDELLE, PLATE	1	1				
48	93503–16003	BALL BILLES	2	2				
49	90183–02M03	NUT, SPRING ECROU, RESSORT	2	2				
50	90250–07M02	PIN, STRAIGHT GOUPILLE, DROITE	1	1				
51	688–45633–00	RING, CROSS PIN JONC, GOUPILLE CRABOT	1	1				
52	93210–07003	O-RING JOINT TORIQUE	1	1				
53	99001–08600	CIRCLIP CIRCLIP	1	1				
54	68S–45571–00	GEAR 2 (28T) PIGNON 2 (28T)	1	1				
55	67F–45331–00–CA	HOUSING, BEARING FLASQUE, ROULEMENT	1	1				
56	93306–207U0	BEARING ROULEMENT	1	1				
57	67F–45576–00	WASHER, THRUST 2 RONDELLE DE CALAGE 2	1	1				
58	93210–86M39	O-RING JOINT TORIQUE	1	1				
59	93317–325U0	BEARING ROULEMENT	1	1				
60	93101–25M03	OIL SEAL JOINT SPY	2	2				
61	90282–04010	KEY, STRAIGHT CLAVETTE, DROITE	1	1				
62	688–45383–02	WASHER, CLAW FREIN D'ECROU	1	1				
63	688–45384–02	NUT ECROU	1	1				
64	64J–44150–01	SHIFT CAM ASSY CAME D'INVERSION	1	1				
65	90201–25M05	WASHER, PLATE RONDELLE, PLATE	1	1				

FIG. 29 LOWER CASING & DRIVE 2 — BOITIER D'HELICE TRANSMISSION2

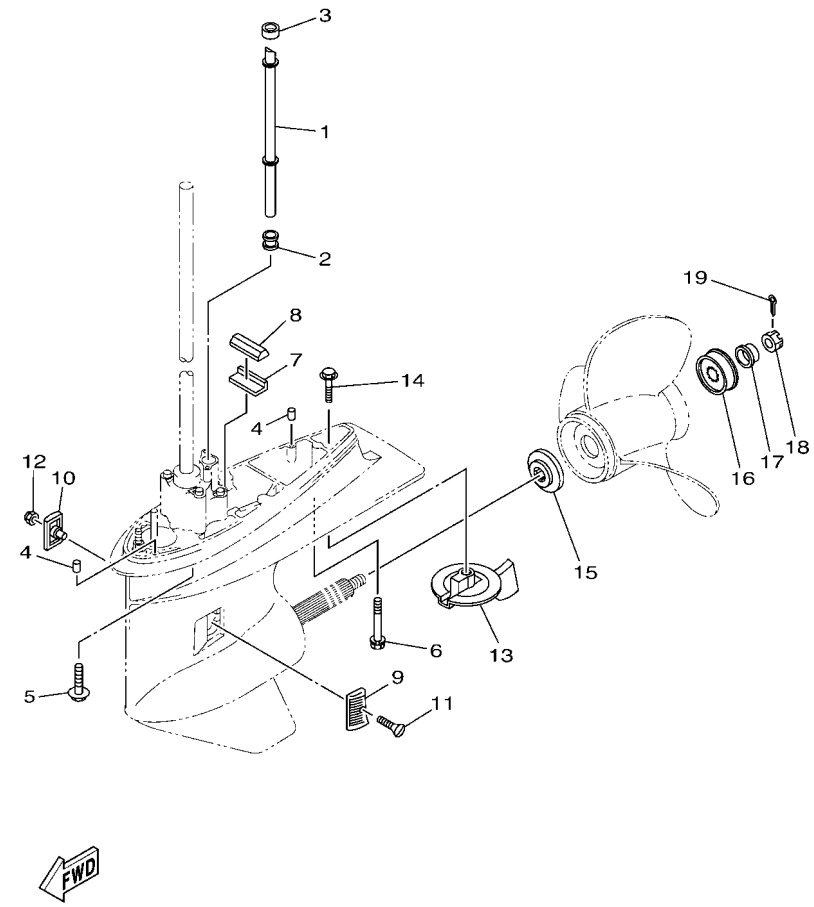

6C2F100-S290

REF. NO.	PART NO. N° PIECES	DESCRIPTION DESCRIPTION	6C2M	6C6M				REMARKS REMARQUES
1	6C5–44361–00	TUBE, WATER 1 TUBE D'EAU 1	1	1				L(20.9") L(20.9")
	6C5–44361–10	TUBE, WATER 1 TUBE D'EAU 1		1				X(25.4") X(25.4")
2	663–44367–01	DAMPER, WATER SEAL 3 JOINT TUBE D'EAU 3	1	1				
3	663–44366–01	DAMPER, WATER SEAL 2 JOINT, TUBE D'EAU 2	1	1				
4	93606–12019	PIN, DOWEL GOUPILLE	2	2				
5	90119–10068	BOLT, WITH WASHER BOULON, AVEC RONDELLE	4	4				L(20.9") L(20.9")
6	90119–08195	BOLT, WITH WASHER BOULON, AVEC RONDELLE	1	1				L(20.9") L(20.9")
7	663–45376–00	GUIDE, SEAL DAMPER BUTEE, JOINT CAOUTCHOUC	1	1				
8	688–45375–00	DAMPER, SEAL BOURRELET, CAOUTCHOUC	1	1				
9	6H1–45214–00	COVER, WATER INLET 1 GRILLE, ENTREE D'EAU 1	1	1				
10	6H1–45215–00	COVER, WATER INLET 2 GRILLE, ENTREE D'EAU 2	1	1				
11	90151–05M00	SCREW, COUNTERSUNK VIS, TETE NOYEE	1	1				
12	90185–05002	NUT, NYLON ECROU,AUTO-BLOQUANT	1	1				
13	67F–45371–00	TAB-TRIM ANODE DERIVE	1	1				
14	90105–10M67	BOLT, FLANGE BOULON, A COLLERETTE	1	1				
15	688–45987–01	SPACER 1 ENTRETOISE 1	1	1				
16	67F–45997–00	SPACER 2 ENTRETOISE 2	1	1				
17	90389–25M00	BUSH DOUILLE	1	1				
18	90171–16011	NUT, CASTLE ECROU, CRENELE	1	1				
19	91490–30025	PIN. COTTER GOUPILLE	1	1				

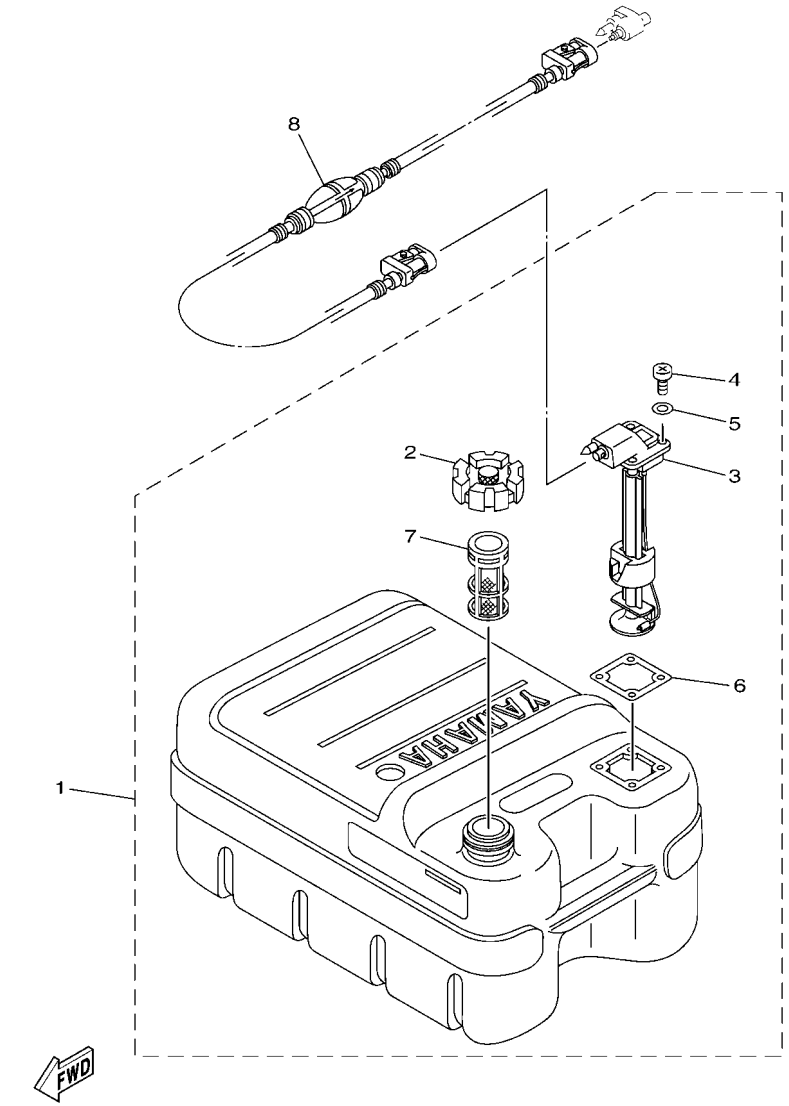

6CAD300-U280

FIG. 30 FUEL TANK — RESERVOIR A CARBURANT

REF. NO.	PART NO. N° PIECES	DESCRIPTION DESCRIPTION	6C2M	6C6M				REMARKS REMARQUES
1	6YJ–24201–31	FUEL TANK ASSY (24L) RESERVOIR A ESSENCE (ENS.):24L	1	1				AP AP
2	6YJ–24610–01	.CAP ASSY .BOUCHON	1	1				
3	6Y1–24260–30	.FUEL METER ASSY .INDICATEUR DE CARBURANT	1	1				WITH INDICATOR WITH INDICATOR
4	90157–05M19	.SCREW, PAN HEAD .VIS, TETE TRONCONIQUE	4	4				
5	6Y1–24329–00	.SEAL .JOINT	4	4				
6	6Y1–24268–01	.GASKET, FUEL METER .JOINT, JAUGE A CARBURANT	1	1				
7	6YJ–24167–00	.STRAINER .FILTRE	1	1				
8	6YL–24306–54	FUEL PIPE COMP. 1 DURITE A ESSENCE 1	1	1				AP AP

FIG. 31 STEERING GUIDE — FIXATION DE DIRECTION

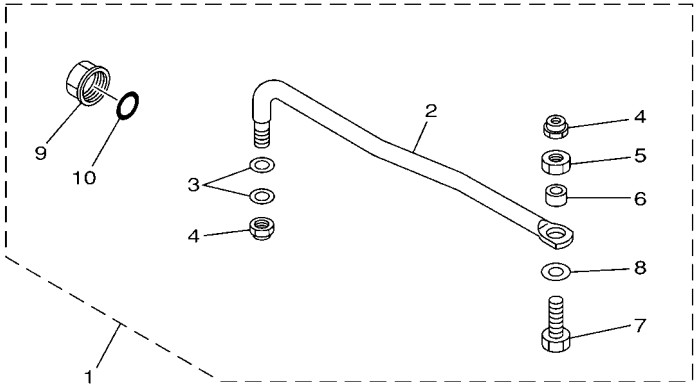

65W0010-8210

REF. NO.	PART NO. N° PIECES	DESCRIPTION DESCRIPTION	6C2M	6C6M				REMARKS REMARQUES
1	65W–61350–00	STEERING GUIDE ATTACHMENT KIT FIXATIONS DE DIRECTION	1	1				AP AP
2	65W–61351–00	.ROD, STEERING LINK .RENVOI DE DIRECTION	1	1				
3	90201–10M20	.WASHER, PLATE .RONDELLE, PLATE	2	2				
4	90185–09M01	.NUT, SELF-LOCKING .ECROU,AUTO-BLOQUANT	2	2				
5	90170–09M03	.NUT .ECROU	1	1				
6	90387–10M42	.COLLAR .COLLERETTE	1	1				
7	90101–09M01	.BOLT .BOULON	1	1				
8	90201–10081	.WASHER, PLATE .RONDELLE, PLATE	1	1				
9	6E5–43145–01	.CAP, CLAMP BRACKET .CAPUCHON, PRESSE	1	1				
10	93210–16275	.O-RING .JOINT TORIQUE	1	1				

FIG. 32 OPTIONAL PARTS 1 — PIECES OPTIONNELLES 1

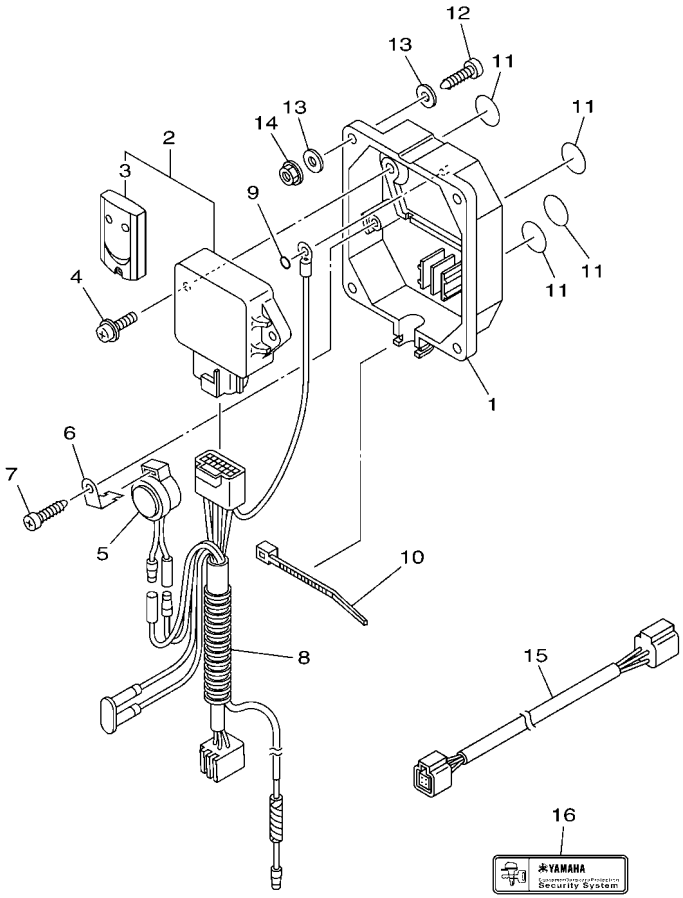

6CJ1100-K370

REF. NO.	PART NO. N° PIECES	DESCRIPTION DESCRIPTION	6C2M	6C6M				REMARKS REMARQUES
1	6Y8–86267–00	CASE COMPLETE 1 CARTER (ENS.) 1	1	1				
2	6Y8–86260–03	REMOTE CONTROL UNIT ASSY UNITE DE TELECOMMANDE (ENS.)	1	1				
3	6AA–86261–01	.XMTR. COMP. .XMTR. COMP.	2	2				
4	97980–06216	SCREW, WITH WASHER VIS, AVEC RONDELLE	2	2				
5	6X4–83383–00	BUZZER RONFLEUR	1	1				
6	6X4–83386–00	STAY, BUZZER SUPPOR, RONFLEUR	1	1				
7	97780–60620	SCREW, TAPPING VIS, TETE BOMBEE	1	1				
8	6Y8–82509–10	WIRE, SUB LEAD FIL, SECONDAIRE	1	1				
9	93210–04279	O-RING JOINT TORIQUE	1	1				
10	90465–11M10	CLAMP BRIDE	1	1				
11	6Y8–8454G–00	PATCH 1 TAMPON 1	4	4				
12	90167–06M00	SCREW, TAPPING VIS, TETE FRAISEE	4	4				UR UR
	97880–06035	SCREW, PAN HEAD VIS, TETE TRONCONIQUE	4	4				UR UR
13	90201–06M30	WASHER, PLATE RONDELLE, PLATE	8	8				
14	95780–06300	NUT, FLANGE ECROU	4	4				
15	6Y8–82521–11	2FT PIGTAIL BUS FAISCEAU (L: 2FT.)	1	1				
16	6Y8–48277–00	STICKER 1 ETIQUETTE 1	4	4				

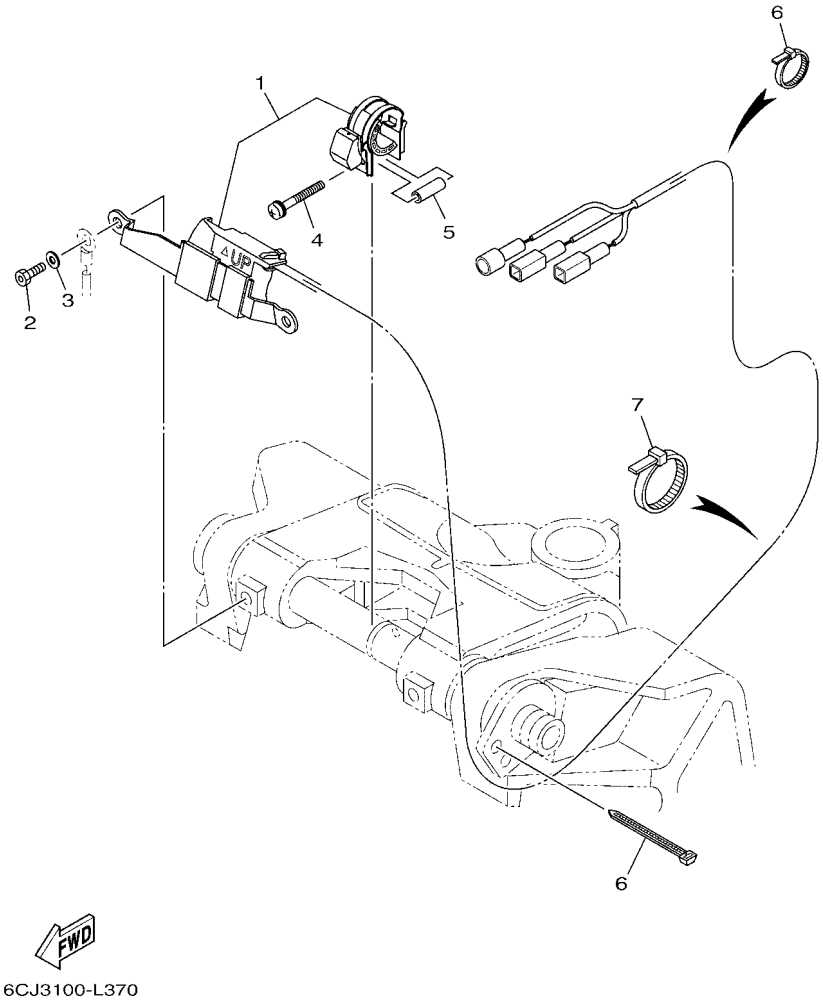

FIG. 33 OPTIONAL PARTS 2 — PIECES OPTIONNELLES 2

REF. NO.	PART NO. N° PIECES	DESCRIPTION DESCRIPTION	6C2M	6C6M				REMARKS REMARQUES
1	6C5–825E0–01	TILT LIMIT SWITCH ASSY COMMUTATEUR, LIMIT INCLINAISON	1	1				
2	90109–06M88	BOLT BOULON	2	2				
3	92990–06100	WASHER, SPRING RONDELLE, GROWER	2	2				
4	90159–05059	SCREW, WITH WASHER VIS, AVEC RONDELLE	1	1				
5	90387–05004	COLLAR COLLERETTE	1	1				
6	90465–11M10	CLAMP BRIDE	5	5				
7	90465–13M18	CLAMP BRIDE	3	3				

FIG. 34 REPAIR KIT 1 — KITS DE REPARATION 1

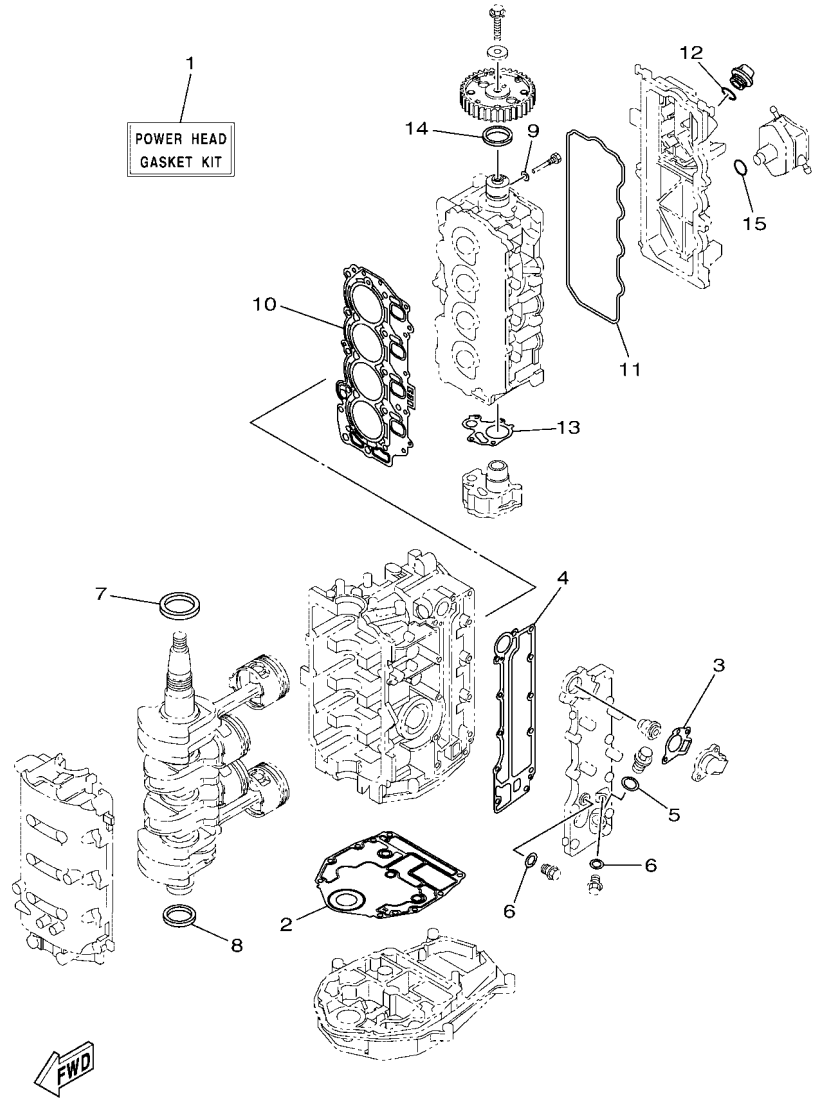

6C1J110-V340

REF. NO.	PART NO. N° PIECES	DESCRIPTION DESCRIPTION	6C2M	6C6M				REMARKS REMARQUES
1	6C5–W0001–05	POWER HEAD GASKET KIT POCHETTE DE JINTS TETE MOTRICE	1	1				
2	6BG–11351–02	.GASKET, CYLINDER .JOINT, D'EMBASE	1	1				
3	62Y–12414–01	.GASKET, COVER .JOINT, COUVERCLE	1	1				
4	6C5–41114–10	.GASKET, EXHAUST OUTER COVER .JOINT, COUVERCLE D'ECHAPPEMENT	1	1				
5	90201–186F1	.WASHER, PLATE .RONDELLE, PLATE	1	1				
6	90430–14115	.GASKET .JOINT	2	2				
7	93102–43M42	.OIL SEAL .JOINT SPY	1	1				
8	93101–35002	.OIL SEAL .JOINT SPY	1	1				
9	90430–06014	.GASKET .JOINT	1	1				
10	6C5–11181–01	.GASKET, CYLINDER HEAD 1 .JOINT, DE CULASSE 1	1	1				
11	62Y–11356–00	.SEAL, CYLINDER 2 .JOINT, SPY CYLINDRE	1	1				
12	93210–24M79	.O-RING .JOINT TORIQUE	1	1				
13	6C5–13329–00	.GASKET, PUMP COVER .JOINT, COUVERCLE DE POMPE	1	1				
14	93102–37M40	.OIL SEAL .JOINT SPY	1	1				
15	93210–24M79	.O-RING .JOINT TORIQUE	1	1				

FIG. 35 REPAIR KIT 2 — KITS DE REPARATION 2

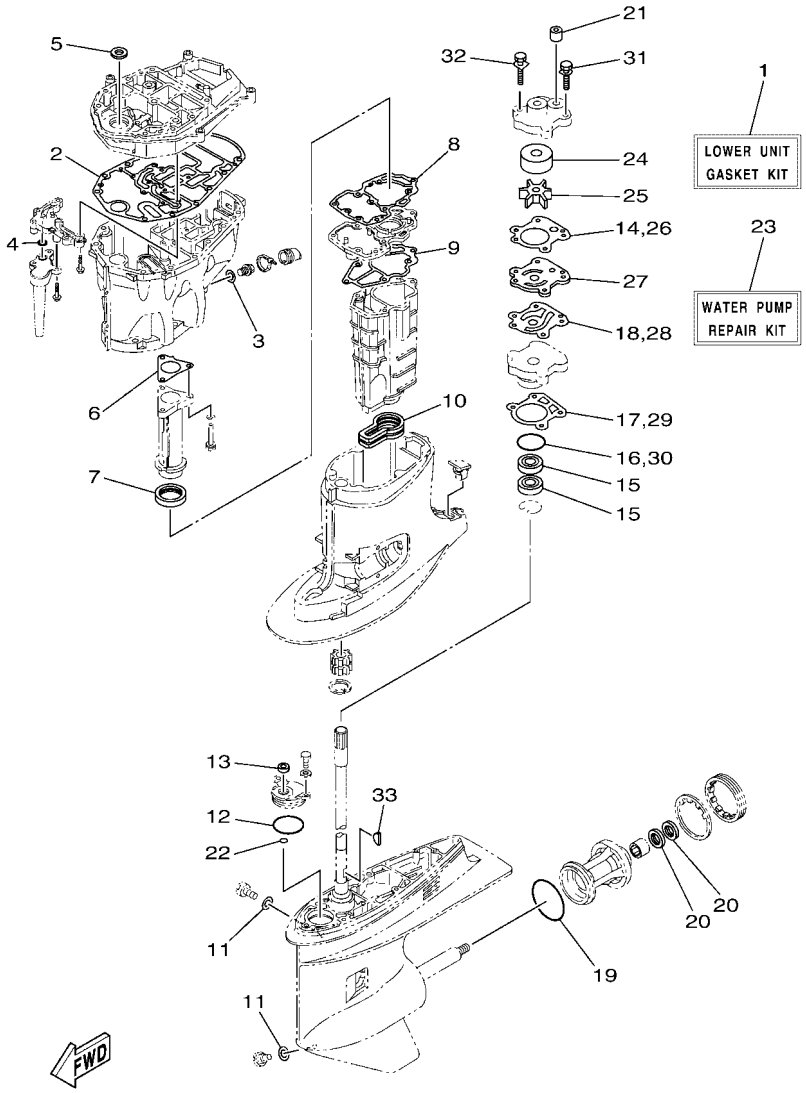

REF. NO.	PART NO. N° PIECES	DESCRIPTION DESCRIPTION	6C2M	6C6M				REMARKS REMARQUES
1	6C6–W0001–22	LOWER UNIT GASKET KIT POCHETTE DE JOINTS EMBASE	1	1				
2	6C5–15312–01	.GASKET, OIL PAN .JOINT DE VENTILATEUR D'HUILE	1	1				
3	90430–14M09	.GASKET .JOINT	1	1				
4	93210–12790	.O-RING .JOINT TORIQUE	1	1				
5	93103–18011	.OIL SEAL .JOINT SPY	1	1				
6	6C5–41133–00	.GASKET, EXHAUST MANIFOLD 1 .JOINT, PIPE D'ECHAPPEMENT	1	1				
7	6C5–46132–00	.GASKET 1 .JOINT 1	1	1				
8	6C5–41134–00	.GASKET, EXHAUST MANIFOLD .JOINT, PIPE D'ECHAPPEMENT	1	1				
9	6C5–41135–00	.GASKET, EXHAUST MANIFOLD .JOINT, PIPE D'ECHAPPEMENT	1	1				
10	6C5–45123–00	.GASKET, MUFFLER .JOINT, POT DE DETENTE	1	1				
11	90430–08003	.GASKET .JOINT	2	2				
12	93210–49046	.O-RING .JOINT TORIQUE	1	1				
13	93106–09014	.OIL SEAL .JOINT SPY	1	1				
14	6H3–44315–A0	.GASKET, WATER PUMP .JOINT, POMPE A EAU	1	1				
15	93101–23070	.OIL SEAL .JOINT SPY	2	2				
16	93210–46044	.O-RING .JOINT TORIQUE	1	1				
17	688–44316–A0	.GASKET, WATER PUMP .JOINT, POMPE A EAU	1	1				
18	6H3–44324–A0	.GASKET, CARTRIDGE .JOINT	1	1				
19	93210–86M39	.O-RING .JOINT TORIQUE	1	1				
20	93101–25M03	.OIL SEAL .JOINT SPY	2	2				
21	663–44366–01	.DAMPER, WATER SEAL 2 .JOINT, TUBE D'EAU 2	1	1				
22	93210–07003	.O-RING .JOINT TORIQUE	1	1				
23	6H3–W0078–02	WATER PUMP REPAIR KIT KIT DE REPARATION DE LA POMPE	1	1				
24	663–44322–00	.INSERT, CARTRIDGE .CUVETTE	1	1				
25	6H3–44352–00	.IMPELLER .TURBINE	1	1				
26	6H3–44315–A0	.GASKET, WATER PUMP .JOINT, POMPE A EAU	1	1				
27	6H3–44323–00	.OUTER PLATE, CARTRIDGE .PLAQUE EXTERIEURE	1	1				

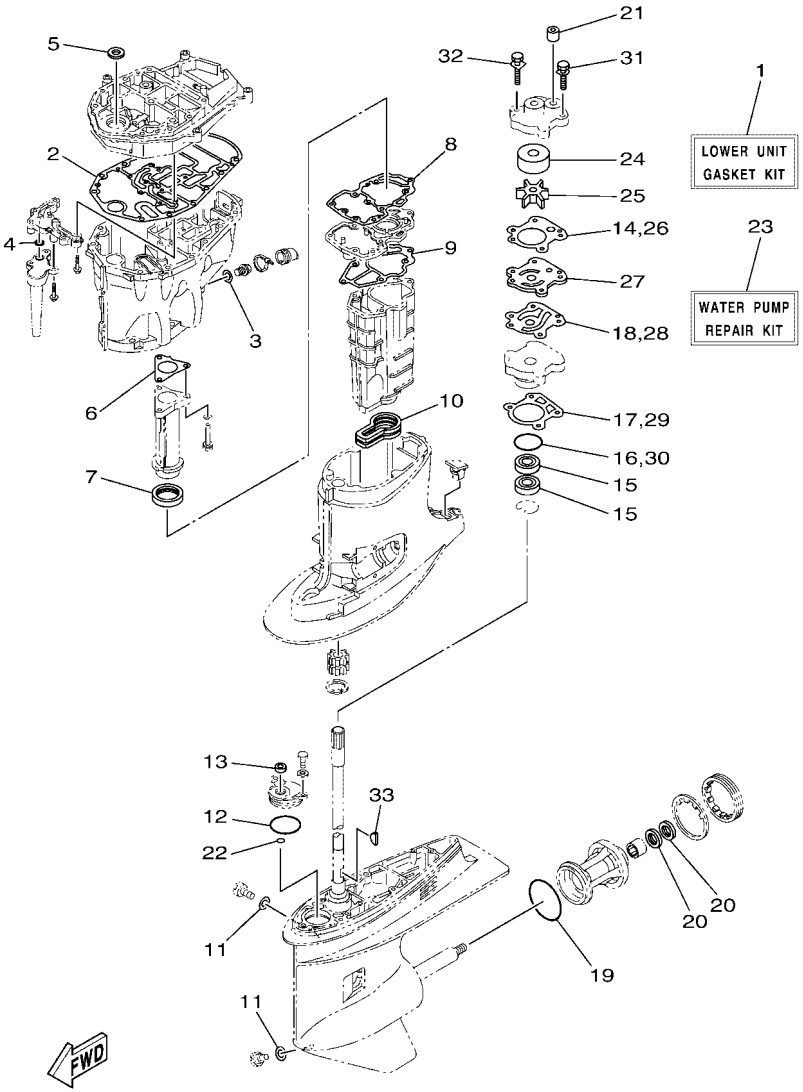

6C2E100-R350

FIG. 35 REPAIR KIT 2 — KITS DE REPARATION 2

REF. NO.	PART NO. N° PIECES	DESCRIPTION DESCRIPTION	6C2M	6C6M				REMARKS REMARQUES
28	6H3–44324–A0	.GASKET, CARTRIDGE .JOINT	1	1				
29	688–44316–A0	.GASKET, WATER PUMP .JOINT, POMPE A EAU	1	1				
30	93210–46044	.O-RING .JOINT TORIQUE	1	1				
31	90119–08191	.BOLT, WITH WASHER .BOULON, AVEC RONDELLE	2	2				
32	90119–08194	.BOLT, WITH WASHER .BOULON, AVEC RONDELLE	2	2				
33	90280–03M03	.KEY, WOODRUFF .CLAVETTE, DEMI-LUNE	1	1				

NUMERICAL INDEX
INDEX NUMERIQUE

PART NO. N° PIECES	REF. NO.
6C5–11111–20–9S	5 – 2
62Y–11119–00	5 – 29
6CJ–11119–00	5 – 20
62Y–11133–31	5 – 3
6C5–11168–00	5 – 16
6C5–11181–01	5 – 10
	34 – 10
6C5–11191–02–9S	5 – 14
6G8–11197–A0	5 – 6
62Y–11325–00	1 – 3
	3 – 17
6G8–11325–00	1 – 5
	5 – 4
66M–11327–00–94	3 – 19
66M–11328–01	3 – 18
6BG–11351–02	3 – 7
	34 – 2
62Y–11356–00	5 – 18
	34 – 11
6C5–11411–10	4 – 1
6BG–11416–00	4 – 2
6BG–11416–10	4 – 2
6BG–11416–20	4 – 2
6BG–11416–30	4 – 2
6C5–11536–00	11 – 7
6C5–11537–10	11 – 2
6H4–11545–00	13 – 9
62Y–11557–00	11 – 8
67C–11603–01	4 – 7
67C–11604–01	4 – 7
67C–11605–01	4 – 7
69W–11631–01–97	4 – 6
62Y–11633–00	4 – 8
69W–11635–01	4 – 6
69W–11636–01	4 – 6
6C5–11650–10	4 – 3
6C5–11654–00	4 – 4
6CJ–11656–00	4 – 5
6CJ–11656–10	4 – 5
6CJ–11656–20	4 – 5
6CJ–11656–30	4 – 5
69W–12111–00	6 – 1
51Y–12114–00	6 – 4
62Y–12116–00	6 – 3
30X–12117–00	6 – 5
30X–12118–00	6 – 6
51Y–12119–00	6 – 7
69W–12121–10	6 – 2

PART NO. N° PIECES	REF. NO.
6C5–12146–00	6 – 8
62Y–12151–00	6 – 9
6C5–12151–00	6 – 12
62Y–12158–00	6 – 11
6C5–12158–00	6 – 14
64J–12159–00	6 – 10
6C5–12159–00	6 – 13
6C5–12171–00	11 – 1
6C5–12231–00	6 – 15
6C5–12233–00	6 – 16
6C5–12241–00	6 – 17
6C5–12243–00	6 – 18
6G8–12411–03	1 – 1
	3 – 11
688–12412–00	3 – 12
6C5–12413–00–9S	3 – 13
62Y–12414–01	1 – 2
	3 – 14
	34 – 3
6BG–12481–00	20 – 14
62Y–12481–10	3 – 10
66M–12535–00	3 – 20
6AW–12572–00	20 – 6
6C5–12576–00	8 – 16
6R3–12580–00	20 – 8
6C5–12858–A0	3 – 28
6C5–13105–03	7 – 10
62Y–13131–00	12 – 28
6C5–13161–00	7 – 13
6C5–1319C–00	7 – 11
6C5–13300–01	11 – 11
6C5–13329–00	11 – 12
	34 – 13
6CJ–13411–10	27 – 8
6C5–13428–01	8 – 20
6C5–13437–64	13 – 20
5GH–13440–80	1 – 4
	3 – 27
6C5–13542–00	10 – 3
6C5–13545–00	10 – 19
6C5–13546–00	10 – 2
6C5–13547–00	10 – 20
6C5–13548–00	10 – 24
6C5–13557–00	7 – 4
6C5–13577–00	10 – 11
6C5–13593–01	9 – 20
6C5–13641–01	7 – 2
6C5–13645–00	7 – 3

PART NO. N° PIECES	REF. NO.
6C5–13716–00	9 – 22
6C5–13739–00	10 – 1
6C5–13750–00	7 – 5
6C5–13761–00	7 – 16
6C5–13781–00	9 – 21
6C5–13906–02	9 – 9
6C5–13907–00	9 – 17
6C5–13910–10	9 – 16
6C5–13915–00	1 – 7
	9 – 19
6C5–13974–00	10 – 16
6C5–1410B–00	7 – 17
6C5–1410F–00	10 – 23
6C5–14127–10	9 – 18
6C5–14148–00	10 – 14
6BG–14149–00	10 – 9
6C5–14180–04	9 – 1
6C5–14182–20	9 – 2
6C5–14191–00	9 – 13
6C5–14200–03	7 – 1
6C5–14225–00	9 – 25
6C5–14251–00	10 – 13
6C5–14386–00	9 – 5
6C5–14397–00	9 – 14
6C5–14440–10	8 – 4
6C5–14446–00	7 – 15
6C1–14453–02	8 – 5
6C5–14453–02	8 – 5
6C1–14477–00	8 – 6
62Y–14485–00	5 – 15
6C5–14496–00	7 – 9
6C5–14546–10	9 – 4
6C5–14567–00	9 – 15
6C5–14711–00–CA	26 – 12
6C5–14960–20	9 – 12
6C5–14984–10	1 – 8
	9 – 23
6C5–14985–00	9 – 3
6C5–15100–12	3 – 2
6C5–15311–02	27 – 1
6C5–15312–01	27 – 2
	35 – 2
6CJ–15316–01	27 – 4
6C5–1531A–10	5 – 24
6CJ–15333–10	27 – 10
6C5–15362–00	27 – 12
6G8–15363–00	5 – 22
6C5–15378–00	5 – 25

PART NO. N° PIECES	REF. NO.
6C5–15378–11	5 – 27
6C5–21337–10	9 – 24
6C5–21841–01	10 – 12
6C5–22435–00	24 – 20
6CJ–22471–10	24 – 13
6CJ–24135–00	20 – 21
6BG–24136–01	20 – 19
6YJ–24167–00	30 – 7
6YJ–24201–31	30 – 1
6C5–24251–01	1 – 9
	10 – 21
6Y1–24260–30	30 – 3
6Y1–24268–01	30 – 6
6G1–24304–10	12 – 1
6YL–24306–54	30 – 8
6C5–24313–10	12 – 3
6C5–24321–00	10 – 4
6C5–24322–00	10 – 5
6BG–24323–00	10 – 6
6CJ–24324–00	10 – 7
6CJ–24325–00	10 – 8
6Y1–24329–00	30 – 5
6BG–24329–01	19 – 25
62Y–24374–01	12 – 33
67F–24377–00	12 – 4
688–24378–00	20 – 10
	20 – 13
6C5–24379–00	10 – 18
6C5–24387–00	10 – 15
6C5–24410–01	12 – 24
62Y–24411–03	12 – 26
6C5–24415–00	12 – 25
6C5–2441R–10	9 – 6
6C5–2441T–10	9 – 7
62Y–24423–00	12 – 27
6C5–24444–00	10 – 10
62Y–24444–01	12 – 30
6C5–24453–00	9 – 8
62Y–24454–00	12 – 29
6D8–24469–00	12 – 14
6C5–24471–01	12 – 31
6D8–24519–00	12 – 15
6C5–2451B–00	10 – 22
6D8–24560–01	12 – 10
6D8–24562–00	12 – 13
6D8–24563–00	1 – 10
	12 – 11
6D8–24564–00	1 – 11

PART NO. N° PIECES	REF. NO.
6D8–24564–00	12 – 12
6C5–24566–11	12 – 16
6C5–24592–00	9 – 10
6YJ–24610–01	30 – 2
6C5–28100–01	12 – 37
67F–2812A–00	16 – 33
6C1–28199–7N–D0	12 – 38
6C1–28199–7N–E0	12 – 38
6C1–28199–7N–F0	12 – 38
6C1–28199–7N–G0	12 – 38
6C1–28199–7N–H0	12 – 38
6C1–28199–7N–S0	12 – 38
6C1–28199–8N–K0	12 – 39
6C1–28199–8N–L0	12 – 39
6C1–28199–8N–M0	12 – 39
6C1–28199–8N–N0	12 – 39
6C1–28199–8N–P0	12 – 39
6C1–28199–8N–R0	12 – 39
6C5–41113–11–9S	3 – 8
6C5–41114–10	3 – 15
	34 – 4
6C5–41131–00–CA	26 – 5
6C5–41133–00	26 – 4
	35 – 6
6C5–41134–00	26 – 8
	35 – 8
6C5–41135–00	26 – 11
	35 – 9
6C5–41137–03	26 – 1
688–41211–01	21 – 21
6H4–41237–00	21 – 22
62Y–42154–A0	21 – 24
6C5–42171–00	21 – 25
6C5–42335–00	21 – 30
6BG–42384–00	20 – 3
69W–42510–01–8D	23 – 1
6C2–42610–31	2 – 1
6C6–42610–31	2 – 1
6CJ–42615–00	2 – 9
6CB–42617–00	13 – 19
6CJ–4261A–01	2 – 2
6BG–42649–00	2 – 12
6BG–42651–00	2 – 3
6BG–42652–00	2 – 6
6BG–42662–01	2 – 10
6CJ–42675–00	2 – 15
6CJ–42676–00	2 – 16
60A–42677–00	2 – 13

PART NO. N° PIECES	REF. NO.
6C5–42677–10	2 – 13
61S–42678–10	2 – 14
6C6–42678–20	2 – 14
6AH–42697–10	2 – 11
6CJ–42710–02–8D	19 – 1
62Y–42715–01	21 – 8
62Y–42716–01	19 – 6
61A–42717–00	19 – 8
65W–42717–00	19 – 7
6BG–42724–01	20 – 2
6CJ–42725–01	19 – 10
6CJ–42726–10	19 – 11
6H1–42726–31	20 – 1
68U–42727–01	19 – 24
6BG–42727–01	19 – 12
6BG–42741–10–8D	19 – 26
6BG–42748–01	19 – 4
6H4–42748–01	19 – 2
63P–42756–00	16 – 30
6BG–42761–00	19 – 9
6EE–42794–40	19 – 39
6EE–42794–50	19 – 40
6BG–42811–01	16 – 27
6BG–42815–00–8D	19 – 14
6BG–42816–00	19 – 19
6BG–42851–00	2 – 5
6C5–43111–10–8D	22 – 1
6C5–43112–01–8D	22 – 3
6E5–43126–02	22 – 27
6C5–43131–00	22 – 12
66T–43144–00	19 – 21
6G5–43144–00	22 – 24
6E5–43145–01	31 – 9
6G5–43148–00	22 – 20
6C5–43181–00	22 – 15
6C5–43185–00	22 – 16
6C5–43311–01–8D	22 – 10
6C5–43800–13	24 – 1
6CJ–43801–10	24 – 3
6CJ–43804–11	25 – 3
6CJ–43805–11	25 – 2
6EK–4380F–00	25 – 6
6C5–4380G–00	24 – 26
6C5–4380K–12	24 – 22
6CJ–4380R–10	24 – 8
6CJ–43810–10	24 – 2
6C5–43816–00	24 – 25
6C5–43817–10	24 – 23

NUMERICAL INDEX
INDEX NUMERIQUE

PART NO. N° PIECES	REF. NO.
6CJ–43818–00	22 – 35
6CJ–4381B–10	24 – 17
6CJ–43821–10	24 – 5
62Y–43822–00	24 – 4
6CJ–43829–20	24 – 61
6EK–4382E–00	24 – 35
6D8–4382L–00	24 – 50
6C5–43830–10	24 – 28
6C5–43831–00	24 – 62
6C5–43833–00	22 – 36
6C5–43834–00	22 – 37
6D8–43841–00	24 – 29
6D8–43843–00	24 – 45
6D8–43844–00	24 – 44
6H1–43844–10	24 – 48
6CJ–43845–10	24 – 59
69A–4384F–00	24 – 33
6H1–4384G–11	24 – 47
62X–4384H–00	24 – 19
6D8–4384M–00	24 – 32
6D8–43851–00	24 – 40
6C6–43853–00	24 – 37
6C5–43854–00	24 – 52
6C5–43855–10	24 – 42
6C5–43856–10	24 – 49
6C5–43861–00	24 – 11
	24 – 15
6CJ–43861–10	24 – 60
6CJ–43862–11	25 – 12
6CJ–43863–00	24 – 7
	24 – 9
6D8–43863–00	24 – 57
62X–4386K–00	25 – 7
6C5–43871–00	24 – 12
6C5–43875–00	24 – 16
6H1–43875–00	24 – 58
6CJ–43879–10	25 – 8
6C6–4387G–00	24 – 36
6CJ–43880–13	25 – 1
6CJ–43881–10	25 – 10
6EK–43882–00	25 – 11
6H1–43883–00	24 – 30
6C5–43885–01	23 – 18
6EK–43892–00	25 – 4
69J–43894–00	24 – 31
6C5–43895–00	24 – 51
6C5–43899–00	24 – 18
69J–4389J–00	24 – 24

PART NO. N° PIECES	REF. NO.
69J–4389J–00	24 – 39
62Y–44117–01	21 – 2
62Y–44118–00–94	21 – 9
6C5–44120–03	21 – 5
6C5–44120–13	21 – 5
69W–44121–00	21 – 1
688–44122–00	21 – 17
6C5–44122–00	21 – 6
62Y–44135–00	21 – 27
64J–44150–01	28 – 64
6C5–44194–00	23 – 14
6H3–44311–00	28 – 20
6H3–44315–A0	28 – 22
	35 – 14
	35 – 26
688–44316–A0	28 – 30
	35 – 17
	35 – 29
663–44322–00	28 – 21
	35 – 24
6H3–44323–00	28 – 31
	35 – 27
6H3–44324–A0	28 – 32
	35 – 18
	35 – 28
6H3–44341–01–CA	28 – 26
6H3–44352–00	28 – 24
	35 – 25
6C5–44361–00	29 – 1
6C5–44361–10	29 – 1
663–44366–01	28 – 23
	29 – 3
	35 – 21
663–44367–01	29 – 2
6CJ–44385–00	23 – 34
6BL–44391–00	20 – 5
64J–44514–00	23 – 10
69W–44526–01	23 – 12
69W–44551–00–8D	23 – 16
6C5–44552–00–8D	23 – 19
67C–44553–00–8D	23 – 29
69W–44555–00	23 – 20
6C5–44575–00	23 – 22
6C5–45111–00–8D	26 – 22
6C5–45123–00	26 – 14
	35 – 10
6C5–45135–10	27 – 13
6C5–45136–10	27 – 14

PART NO. N° PIECES	REF. NO.
6C5–45155–02	26 – 17
6C5–45181–00–CA	26 – 9
6C5–45211–00–8D	26 – 23
6C5–45213–01	26 – 24
6H1–45214–00	29 – 9
6H1–45215–00	29 – 10
65W–45251–00	1 – 12
	1 – 13
	22 – 6
	22 – 8
	22 – 25
68S–45300–34–8D	28 – 1
68S–45300–44–8D	28 – 1
67F–45301–00–8D	28 – 2
69W–45318–00	26 – 18
688–45321–00	28 – 12
67F–45331–00–CA	28 – 55
688–45341–10	28 – 10
67F–45371–00	1 – 16
	29 – 13
688–45375–00	29 – 8
663–45376–00	29 – 7
6E5–45378–00	28 – 16
688–45383–02	28 – 62
688–45384–02	28 – 63
64J–45501–30	28 – 36
64J–45501–40	28 – 36
688–45536–01	28 – 4
6K5–45551–00	28 – 37
68S–45560–00	28 – 39
688–45567–01	28 – 7
688–45567–10	28 – 7
688–45567–20	28 – 7
688–45567–30	28 – 7
688–45567–40	28 – 7
688–45567–50	28 – 7
688–45567–60	28 – 7
68S–45571–00	28 – 54
67F–45576–00	28 – 57
688–45587–01	28 – 5
688–45587–10	28 – 5
688–45587–20	28 – 5
688–45587–30	28 – 5
688–45587–40	28 – 5
688–45587–50	28 – 5
688–45587–60	28 – 5
67F–45611–01	28 – 41
6D8–45631–00	28 – 42

PART NO. N° PIECES	REF. NO.
688–45633–00	28 – 51
67F–45634–00	28 – 43
6H1–45635–00	28 – 45
6H1–45668–00	28 – 44
688–45987–01	29 – 15
67F–45997–00	29 – 16
6C5–46132–00	26 – 6
	35 – 7
6C5–46241–00	11 – 6
6Y8–48277–00	32 – 16
69W–48344–00	21 – 20
	21 – 34
65W–48511–01	23 – 38
6BG–48538–00	19 – 37
65W–61350–00	31 – 1
65W–61351–00	31 – 2
6C5–81145–00	7 – 7
6C5–81146–10	7 – 12
68V–81315–01	16 – 9
6C5–81336–01	15 – 2
6C5–81337–11	13 – 1
6C5–81410–01	13 – 8
6C5–81450–00	13 – 7
6CJ–81800–01	18 – 1
69J–81801–11	18 – 5
67F–81807–00	18 – 10
67F–81808–00	18 – 8
67F–81809–00	18 – 19
67F–81810–00	18 – 3
67F–81813–00	18 – 6
6C5–81815–00	15 – 13
68F–81820–00	18 – 7
67F–81821–00	18 – 13
6C5–81822–00	17 – 1
6K7–81826–11	18 – 24
69J–81828–00	18 – 25
6C5–8182L–00	7 – 8
67F–81830–00	18 – 17
67F–81832–00	18 – 11
67F–81836–00	18 – 12
6C5–81839–00	18 – 21
67F–8183R–00	18 – 15
60V–8183T–00	18 – 18
6P2–8183X–00	15 – 22
69J–81840–11	18 – 4
67F–81841–00	18 – 14
60X–81842–00	18 – 20
67F–81846–00	18 – 26

PART NO. N° PIECES	REF. NO.
67F–81850–00	18 – 2
67F–81857–00	18 – 9
6C5–81869–00	18 – 23
67F–81891–00	18 – 16
6C5–81919–00	16 – 34
60V–81925–00	15 – 10
6C5–81941–00	18 – 22
6C5–81942–00	16 – 21
6C5–81948–00	15 – 15
68V–8194A–00	15 – 25
60E–81950–00	15 – 1
63P–81950–00	15 – 21
6C5–81953–00	15 – 28
68V–81960–10	14 – 16
6EE–81994–40	13 – 24
6EE–81994–50	13 – 25
6EE–81995–40	13 – 21
6EE–81995–50	13 – 22
6AG–81996–00	13 – 26
6C5–82105–02	17 – 9
6G5–82119–00	15 – 27
67C–82127–10	23 – 32
6E5–82148–00	22 – 4
67F–82151–00	16 – 2
67F–82151–10	16 – 3
67F–8215B–10	16 – 4
67F–8215B–20	16 – 5
6C5–82171–00	14 – 18
6C5–82176–01	16 – 25
6CJ–82181–10	25 – 5
63P–82310–01	14 – 4
6C5–82316–01	14 – 13
6C5–82316–11	14 – 14
6A0–82317–01	8 – 8
	15 – 20
6C5–82317–01	14 – 21
6C5–82340–10	14 – 5
6C5–82340–20	14 – 6
6C5–82340–30	14 – 7
6C5–82340–40	14 – 8
6C5–82388–10	16 – 13
64J–82504–00	16 – 20
6Y8–82509–10	32 – 8
6Y8–82521–11	32 – 15
6C5–8252R–00	16 – 26
6C5–82553–00	16 – 10
6CJ–82554–00	16 – 16
69J–82563–01	15 – 32

PART NO. N° PIECES	REF. NO.
6C5–8257V–00	15 – 4
68F–82582–00	15 – 12
6DA–82582–00	16 – 6
6DA–82582–10	16 – 7
69J–82587–01	15 – 36
61A–82588–01	16 – 17
6C5–82590–D2	16 – 1
60V–8259F–01	16 – 15
6C5–825E0–01	33 – 1
6X4–83383–00	32 – 5
6X4–83386–00	32 – 6
6E5–83558–00	23 – 36
6E5–83558–10	28 – 18
6BG–83614–00	15 – 33
62Y–83626–00	13 – 23
63D–83672–11	22 – 31
68F–83688–00	7 – 18
6Y8–8454G–00	32 – 11
6C5–85525–00	14 – 1
6C5–85525–10	15 – 6
6C5–85548–01	15 – 16
6C5–85561–00	13 – 13
62Y–85580–00	13 – 16
6CJ–85790–00	16 – 11
6C5–85885–00	7 – 6
6C1–8591A–25	14 – 20
6C5–8591A–25	14 – 20
6BG–86112–10	8 – 14
6C5–86120–00	8 – 12
6Y8–86260–03	32 – 2
6AA–86261–01	32 – 3
6Y8–86267–00	32 – 1
6C5–87226–00	9 – 11
6C5–W0001–05	34 – 1
6C6–W0001–22	35 – 1
6H3–W0078–02	1 – 17
	35 – 23
6C5–W009A–13–9S	5 – 1
6C5–W009B–07–9S	3 – 1
90101–06020	22 – 7
	22 – 9
	22 – 26
90101–06063	21 – 10
90101–09M01	31 – 7
90101–12063	22 – 41
90105–08060	6 – 20
90105–09009	5 – 12
90105–10M67	29 – 14

NUMERICAL INDEX
INDEX NUMERIQUE

PART NO. N° PIECES	REF. NO.
90109–06047	2 – 7
90109–06M65	5 – 8
90109–06M80	19 – 29
90109–06M86	15 – 35
	16 – 29
	16 – 32
	19 – 13
	19 – 22
	19 – 33
	19 – 36
	19 – 38
	20 – 18
	20 – 20
	20 – 23
90109–06M88	33 – 2
90109–08229	23 – 11
90109–12MA3	23 – 23
90116–10063	23 – 7
90116–10M53	26 – 27
90119–06025	11 – 13
90119–06261	26 – 7
90119–06289	14 – 23
	15 – 19
90119–06291	8 – 11
	19 – 3
90119–06297	8 – 10
	21 – 29
90119–06304	8 – 3
90119–06MA3	5 – 13
90119–06MA5	3 – 16
90119–08094	23 – 21
90119–08148	12 – 20
90119–08154	3 – 4
90119–08182	26 – 15
90119–08190	8 – 2
90119–08191	28 – 35
	35 – 31
90119–08194	28 – 34
	35 – 32
90119–08195	29 – 6
90119–08202	26 – 16
90119–08M00	26 – 28
90119–10054	22 – 38
90119–10068	29 – 5
90151–05M00	29 – 11
90157–05M19	30 – 4
90159–04005	15 – 14
90159–05059	33 – 4

PART NO. N° PIECES	REF. NO.
90159–06M14	16 – 23
90167–06M00	32 – 12
90170–09M03	31 – 5
90170–16M01	28 – 38
90170–20137	13 – 10
90171–16011	29 – 18
90179–08003	15 – 11
90179–35001	11 – 9
90183–02M03	28 – 49
90185–05002	29 – 12
90185–06M05	2 – 8
90185–08018	23 – 13
90185–09M01	31 – 4
90185–10027	23 – 8
90185–22M11	22 – 14
90201–03313	28 – 47
90201–06M30	32 – 13
90201–10049	23 – 39
90201–10060	22 – 39
90201–10081	31 – 8
90201–10144	11 – 5
90201–10M20	21 – 14
	31 – 3
90201–12062	22 – 42
90201–12426	22 – 43
90201–12M07	19 – 18
90201–12M16	23 – 17
90201–13M19	23 – 26
90201–16014	6 – 19
90201–186F1	3 – 24
	34 – 5
90201–21M18	13 – 11
90201–22M05	23 – 27
90201–25M05	28 – 65
90201–30M00	23 – 2
90202–07M07	21 – 18
90202–21100	23 – 25
90206–10M04	21 – 32
90206–12052	19 – 17
90249–06M19	22 – 21
90250–07M02	28 – 50
90280–03017	11 – 10
90280–03M03	28 – 25
	35 – 33
90282–04010	28 – 61
90340–08002	28 – 9
90340–14M06	3 – 25
	27 – 6

PART NO. N° PIECES	REF. NO.
90340–18M09	3 – 23
90344–51003	3 – 6
90386–10025	22 – 18
90386–10M16	22 – 17
90386–12M37	19 – 15
90386–12MA2	19 – 16
90386–18M35	22 – 29
90386–18M92	22 – 28
90386–22MA4	22 – 13
90386–30M60	23 – 6
90386–30M77	23 – 4
90386–30M78	23 – 3
90386–90M90	21 – 13
90387–04001	16 – 18
90387–05004	33 – 5
90387–06119	8 – 9
	14 – 22
	15 – 18
90387–06285	13 – 3
90387–06M43	19 – 31
90387–06M45	21 – 28
90387–06M69	9 – 26
	19 – 5
90387–06M82	21 – 33
90387–08095	12 – 19
90387–10M42	31 – 6
90387–12057	23 – 28
90389–25M00	29 – 17
90430–06014	5 – 9
	34 – 9
90430–08003	1 – 15
	28 – 11
	35 – 11
90430–14115	3 – 26
	16 – 12
	34 – 6
90430–14M09	1 – 14
	27 – 7
	35 – 3
90445–07M31	28 – 17
90445–07ME8	28 – 17
90445–09036	20 – 9
90445–09220	20 – 11
90445–09304	20 – 16
90445–096H2	20 – 12
90445–13M02	12 – 5
90445–13M36	12 – 22
90446–13M11	12 – 7

PART NO. N° PIECES	REF. NO.
90447–19009	22 – 40
90450–50001	8 – 7
90462–08067	20 – 17
90462–20005	19 – 32
90464–06001	14 – 15
90464–07019	14 – 9
90464–07020	14 – 10
90464–07M56	7 – 14
90464–09130	20 – 22
90464–09M49	19 – 34
90464–10006	23 – 35
90464–12006	8 – 18
90464–12183	15 – 9
	16 – 31
90464–13013	14 – 11
90464–13227	12 – 8
90464–15008	8 – 17
90464–18205	16 – 28
90464–18246	14 – 3
90464–99004	22 – 33
90465–08M89	15 – 34
90465–11M10	8 – 19
	10 – 17
	12 – 6
	15 – 29
	19 – 35
	20 – 4
	20 – 15
	22 – 34
	23 – 31
	23 – 37
	28 – 19
	32 – 10
	33 – 6
90465–11M59	27 – 5
90465–13M11	16 – 8
90465–13M18	8 – 22
	17 – 14
	33 – 7
90465–13M24	16 – 24
90465–13M39	16 – 22
90465–13M97	13 – 18
	15 – 31
	15 – 37
90467–09M17	12 – 9
90467–10M04	12 – 23
	12 – 36
90468–18008	21 – 16

PART NO. N° PIECES	REF. NO.
90468–18008	21 – 19
	21 – 35
90480–06M19	13 – 5
90480–09M12	9 – 27
90480–10M58	12 – 18
90480–12072	17 – 10
90480–12314	13 – 6
90480–13M24	19 – 30
90480–15M31	13 – 4
90480–16013	12 – 17
90480–24003	17 – 7
90501–12082	21 – 11
90501–12M48	28 – 46
90506–14M24	22 – 22
90506–18023	19 – 23
91318–03005	24 – 56
91318–03025	24 – 55
91318–05030	24 – 54
91318–05045	24 – 27
91380–05020	24 – 64
91490–16010	21 – 26
91490–20015	21 – 15
91490–30025	29 – 19
91690–30020	22 – 19
92903–08100	17 – 13
92990–06100	33 – 3
92990–08200	6 – 21
92990–10100	26 – 30
92995–10600	26 – 31
93101–23070	28 – 28
	35 – 15
93101–25M03	28 – 60
	35 – 20
93101–35002	4 – 11
	34 – 8
93102–37M40	11 – 14
	34 – 14
93102–43M42	4 – 10
	34 – 7
93103–18011	26 – 2
	35 – 5
93106–09014	28 – 14
	35 – 13
93210–04279	32 – 9
93210–04N51	24 – 46
93210–064A5	24 – 41
93210–07003	28 – 52
	35 – 22

PART NO. N° PIECES	REF. NO.
93210–12790	27 – 9
	35 – 4
93210–13M63	5 – 7
93210–16275	31 – 10
93210–24M79	5 – 23
	12 – 34
	34 – 12
	34 – 15
93210–29M94	23 – 5
93210–44006	24 – 10
93210–46044	28 – 29
	35 – 16
	35 – 30
93210–49001	24 – 6
93210–49046	28 – 13
	35 – 12
93210–64488	24 – 63
93210–86M39	28 – 58
	35 – 19
93306–207U0	28 – 56
93315–52563	28 – 3
93317–322V0	28 – 40
93317–325U0	28 – 59
93332–00095	28 – 8
93332–000U3	28 – 6
93410–18M05	22 – 30
93410–28M06	23 – 9
93420–36M01	26 – 19
93450–17129	4 – 9
93450–40165	28 – 27
93501–04M02	21 – 12
93501–08001	24 – 43
93503–16003	24 – 14
	28 – 48
93505–32038	24 – 38
93604–10M03	3 – 9
	26 – 10
	28 – 33
93604–26256	24 – 53
93605–17002	11 – 3
93606–12019	3 – 3
	26 – 21
	26 – 26
	27 – 3
	29 – 4
93606–19002	22 – 2
93608–12M05	8 – 1
	26 – 3

NUMERICAL INDEX
INDEX NUMERIQUE

PART NO. N° PIECES	REF. NO.
93700–06002	22 – 11
94702–00418	1 – 6
	5 – 31
95023–06030	13 – 12
	13 – 14
95333–08600	17 – 12
95380–05600	12 – 32
95380–05700	21 – 23
95380–05800	2 – 4
95380–06600	8 – 13
	19 – 27
95380–08600	12 – 21
	17 – 4
95380–10600	26 – 29
95380–12600	22 – 44
95380–12700	23 – 24
95680–08330	17 – 3
95780–06300	32 – 14
95812–06025	27 – 11
95817–10035	11 – 4
95D95–06020	13 – 2
95D95–06035	21 – 31
97513–06535	3 – 5
97513–08545	17 – 8
97595–05512	3 – 21
	13 – 17
97595–05514	21 – 7
97602–04316	25 – 9
97607–04210	5 – 17
97780–60520	20 – 7
97780–60620	15 – 3
	15 – 17
	15 – 30
	32 – 7
97880–06035	32 – 12
97885–06008	22 – 5
	23 – 33
97980–06216	32 – 4
97980–06325	19 – 28
97985–04116	16 – 19
97985–06216	22 – 32
97D95–06014	19 – 20
97E75–06520	26 – 25
97E75–06525	26 – 13
97E75–08530	23 – 15
97E75–10545	26 – 20
97E95–06512	22 – 23
97E95–06514	5 – 26

PART NO. N° PIECES	REF. NO.
97E95–06514	5 – 28
	14 – 2
	14 – 19
	15 – 5
	16 – 14
97E95–06516	8 – 15
	8 – 21
	28 – 15
97E95–06520	3 – 22
	5 – 19
	5 – 21
	5 – 30
	15 – 24
	21 – 3
97E95–06525	12 – 2
	14 – 12
	14 – 17
	21 – 4
97E95–06530	12 – 35
97E95–06610	15 – 23
	15 – 26
97E95–06620	15 – 7
	15 – 8
	17 – 11
97E95–08520	23 – 30
97E95–08525	17 – 6
97E95–08535	17 – 5
98980–05025	5 – 5
99001–08600	28 – 53
99002–03600	24 – 34
99009–32500	24 – 21
99530–08012	5 – 11
	13 – 15
99530–10114	17 – 2

PART NO. N° PIECES	REF. NO.

PART NO. N° PIECES	REF. NO.

PART NO. N° PIECES	REF. NO.

PART NO. N° PIECES	REF. NO.