YAMAHA

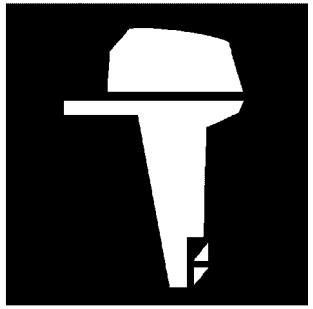

PARTS CATALOGUE
CATALOGUE DE PIECES DETACHEES

VF90B-2024 (6HK8)

YAMAHA
GENUINE
Parts & Accessories

1Y6HK-300FE

( )

VF90B
PARTS CATALOGUE
©2024 by Yamaha Motor Co., Ltd.
1st edition, March 2024
All rights reserved.
Any reprinting or unauthorized use
without the written permission of
Yamaha Motor Co., Ltd.
is expressly prohibited.
Printed in Japan.

VF90B
CATALOGUE DE PIECES DETACHEES
©2024 par Yamaha Motor Co., Ltd.
1re édition, mars 2024
Tous droits réservés
Toute réimpression ou utilisation
non autorisée sans la permission écrite
de Yamaha Motor Co., Ltd.
est formellement interdite.
Imprimé au Japon

FOREWORD

This Parts Catalogue is related to the parts for the model(s) on the cover page. When you are ordering replacement parts, please refer to this Parts Catalogue and quote both part numbers and part names correctly.

1. Modifications or additions which have been made after the issue of the Parts Catalogue will be announced in the Parts News.
   It is advisable that you make the necessary corrections to the Parts Catalogue according to the Parts News.

2. Abbreviations
   The following abbreviations are used in this Parts Catalogue.
   "UR" Use specified parts number.
   "UN" Use as many as needed.
   "AP" Alternate Parts
   "LM" Locally Made (Parts need to be ordered locally)
   "F#" Frame No. (Applicable machine No.)
   "O/S" Over Size

3. The number of components for assembly
   - Parts, which are to be supplied in an assembly, are listed with a dot (.) in front of the part name as shown below.
   - The numeral appearing to the right of each component part indicates the quantity of parts for each assembly unit.

PART NO.	DESCRIPTION	Q'TY	REMARKS
2F5–83310–60	FRONT FLASHER LIGHT ASSY	2	
115–83311–60	.BULB (6V–18W)	1	

4. Applicable colours of graphics are represented in the "REMARKS" as shown below.

PART NO.	DESCRIPTION	Q'TY	REMARKS
2N4–24110–00–X5	FUEL TANK COMP.	2	MXR
3J1–24240–10	.GRAPHIC, FUEL TANK	1	FOR MXR

5. Note that the illustrations for reference in finding parts numbers are not to be used for assembling. When assembling, please use the applicable service manual.

6. The asterisk (*) before a reference number indicates modified items after the first edition.

7. Applicable Serial No.
   Engine Serial No.

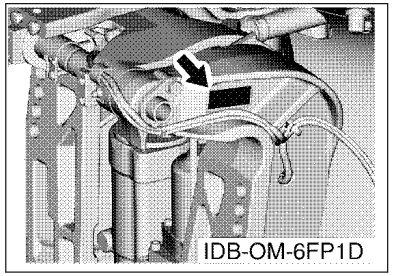

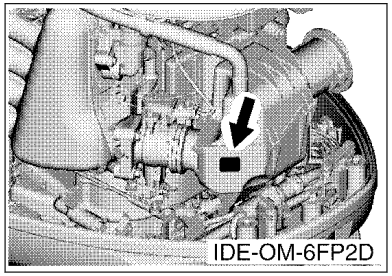

8. Applicable Engine Starting Serial No.

Model	Serial No.	Model	Serial No.
VF90B	6HK-1017314		

9. Applicable Colour Code

Abbreviation	Colour Name	Colour Code
SBL	SHINY BLACK	00NA

10. Quantity Column Information

Column No.	Name Of Q'ty Column	Applicable Model
1	6HK8	VF90B

AVANT–PROPOS

Ce catalogue de pièces détachées concerne les pièces pour le(s) modèle(s) indiqué(s) sur la page de couverture. Lorsque vous commandez des pièces de rechange, veuillez vous référer à ce catalogue de pieces détachées et indiquer clairement les numéros et les noms des pièces détachées.

1. Les modifications ou ajouts ayant été effectués après la parution du catalogue de pièces détachées seront décrits dans les Bulletins d'information concernant les pièces détachées.
   Il est recommandé que vous apportiez les corrections nécessaires au catalogue des pièces détachées en vous référant aux Bulletins d'information.

2. Abréviations
   Dans ce catalogue, les abréviations suivantes sont utilisées:
   "UR" Utiliser le numéro de pièces spécifié.
   "UN" Utiliser autant que nécessaire.
   "AP" Pièces de substitution
   "LM" Fabrication locale (les pièces doivent être commandées localement.)
   "F#" N° de cadre (applicable au N° de série)
   "O/S" Surdimensionné

3. Nombre de pièces d'un assemblage
   - Les pièces fournies comme composants d'un assemblage sont précédées d'un point (.) de la manière indiquée ci–dessous.
   - Le chiffre apparaissant à la droite de chaque composant indique la quantité de pièces pour chaque unité d'assemblage.

N° PIECES	DESCRIPTION	QTE	REMARQUES
2F5–83310–60	ENS. CLIGNOTANT AVANT	2	
115–83311–60	.AMPOULE (6V–18W)	1	

4. Les couleurs concernant les graphiques sont indiquées dans la colonne "REMARQUES", comme indiqué ci–dessous.

N° PIECES	DESCRIPTION	QTE	REMARQUES
2N4–24110–00–X5	RESERVOIR A ESSENCE.	2	MXR
3J1–24240–10	.GRAPHIQUE	1	POUR MXR

5. Veuillez noter que les illustrations sont indiquées à titre de référence pour trouver les numéros de pièces, non pour être utilisées lors de l'assemblage. Lors de l'assemblage, veuillez utiliser le manuel d'entretien adéquat.

6. L'astérisque (*) placé devant un numéro de référence indique des éléments qui ont été modifiés après la première édition.

7. N° de série applicable
   N° de Série du moteur

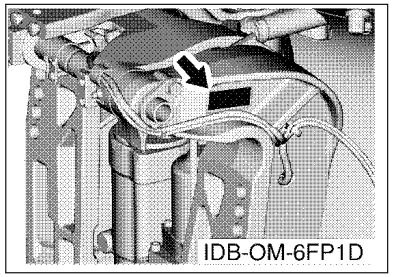

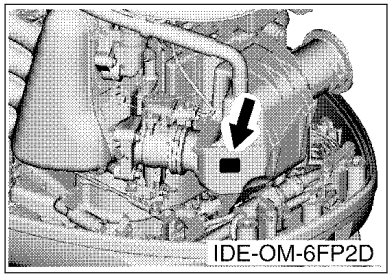

8. N° de série initial du moteur applicable

Modèle	N° de série	Modèle	N° de série
VF90B	6HK-1017314		

9. Code couleur applicable

Abréviation	Nom de la couleur	Code couleur
SBL	SHINY BLACK	00NA

10. Informations relatives à la colonne Quantité

N° de la colonne	Nom de la colonne Qté	Modèle applicable
1	6HK8	VF90B

CONTENTS

SCHEDULED SERVICE PARTS.....1
TOP COWLING.....2
CYLINDER & CRANKCASE 1.....3
CRANKSHAFT & PISTON.....5
CYLINDER & CRANKCASE 2.....7
VALVE.....9
INTAKE 1.....11
INTAKE 2.....13
INTAKE 3.....14
VAPOR SEPARATOR 1.....15
VAPOR SEPARATOR 2.....16
FUEL.....17
GENERATOR.....19
ELECTRICAL 1.....20
ELECTRICAL 2.....21
ELECTRICAL 3.....22
ELECTRICAL 4.....23
ELECTRICAL 5.....24
STARTING MOTOR.....25
BOTTOM COWLING 1.....26
BOTTOM COWLING 2.....28
CONTROL.....29
BRACKET 1.....31
BRACKET 2.....33
POWER TRIM & TILT ASSY 1.....35
POWER TRIM & TILT ASSY 2.....38
UPPER CASING.....39
OIL PAN.....41
LOWER CASING & DRIVE 1.....42
LOWER CASING & DRIVE 2.....46
FUEL TANK.....47
STEERING GUIDE.....48
OPTIONAL PARTS 1.....49
OPTIONAL PARTS 2.....52
OPTIONAL PARTS 3.....53
OPTIONAL PARTS 4.....54
OPTIONAL PARTS 5.....55
OPTIONAL PARTS 6.....56
REPAIR KIT 1.....57
REPAIR KIT 2.....58

INDEX

NUMERICAL INDEX.....60

TABLE DES MATIERES

PIECES MAINTENANCE PERIODIQUE.....1
CAPOT SUPERIEUR..... 2
CYLINDRE & CARTER 1..... 3
VILEBREQUIN & PISTON.....5
CYLINDRE & CARTER 2..... 7
SOUPAPE..... 9
ADMISSION 1.....11
ADMISSION 2.....13
ADMISSION 3.....14
VAPEUR SEPARATEUR 1.....15
VAPEUR SEPARATEUR 2.....16
CARBURANT..... 17
GENERATRICE.....19
PARTIE ELECTRIQUE 1.....20
PARTIE ELECTRIQUE 2.....21
PARTIE ELECTRIQUE 3.....22
PARTIE ELECTRIQUE 4.....23
PARTIE ELECTRIQUE 5.....24
DEMARREUR ELECTRIQUE.....25
CAPOT INFERIEUR 1.....26
CAPOT INFERIEUR 2.....28
COMMANDE..... 29
SUPPORT 1..... 31
SUPPORT 2..... 33
PUISSANCE PARER ET INCLINER 1..... 35
PUISSANCE PARER ET INCLINER 2..... 38
FOURREAU.....39
VENTILATEUR D'HUILE..... 41
BOITIER D'HELICE TRANSMISSION1.....42
BOITIER D'HELICE TRANSMISSION2.....46
RESERVOIR A CARBURANT.....47
FIXATION DE DIRECTION..... 48
PIECES OPTIONNELLES 1.....49
PIECES OPTIONNELLES 2.....52
PIECES OPTIONNELLES 3.....53
PIECES OPTIONNELLES 4.....54
PIECES OPTIONNELLES 5.....55
PIECES OPTIONNELLES 6.....56
KITS DE REPARATION 1..... 57
KITS DE REPARATION 2..... 58

INDEX

INDEX NUMERIQUE.....60

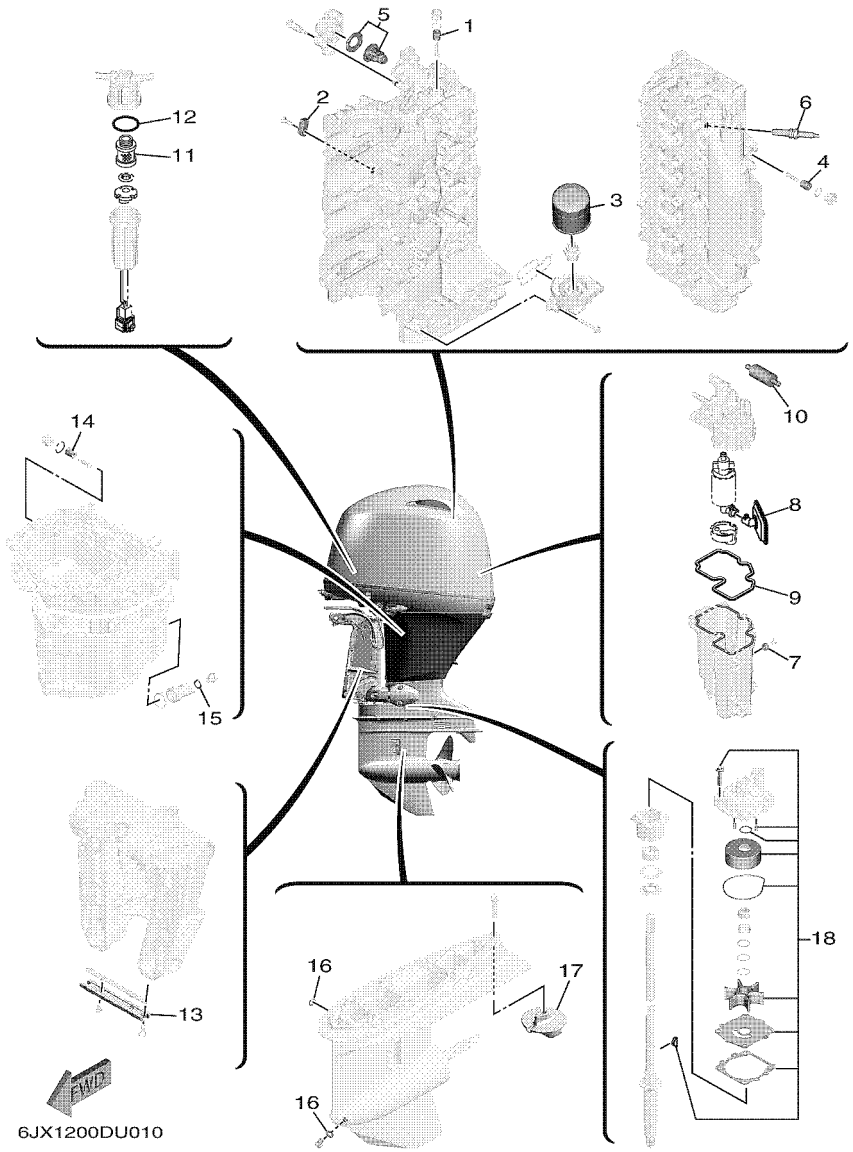

FIG. 1 SCHEDULED SERVICE PARTS — PIECES MAINTENANCE PERIODIQUE

REF. NO.	PART NO. N° PIECES	DESCRIPTION DESCRIPTION	6HK8					REMARKS REMARQUES
1	6G8–11325–00	ANODE ANODE	1					
2	63P–11325–01	ANODE ANODE	1					
3	5GH–13440–71	ELEMENT ASSY, OIL CLEANER ELEMENT, FILTRE A HUILE	1					
4	6G8–11325–00	ANODE ANODE	2					
5	6FP–12411–00	THERMOSTAT THERMOSTAT	1					
6	94702–00440	PLUG, SPARK (NGK LKR6E 9N) BOUGIE D,ALLUMAGE NGK LKR6E 9N	4					
7	63P–11325–21	ANODE ANODE	1					
8	6FP–13915–00	FILTER FILTRE	1					
9	6FP–14984–00	GASKET, FLOAT CHAMBER JOINT, CUVE DE FLOTTEUR	1					
10	6C5–24251–01	STRAINER 1 FILTRE 1	1					
11	6D8–24563–00	ELEMENT, FILTER ELEMENT, FILTRE	1					
12	6D8–24564–00	GASKET JOINT	1					
13	6H1–45251–03	ANODE ANODE	1					
14	6G8–11325–00	ANODE ANODE	1					
15	90430–14M09	GASKET JOINT	1					
16	90430–08003	GASKET JOINT	2					
17	6E5–45371–01	TAB-TRIM ANODE DERIVE	1					
18	68V–W0078–01	WATER PUMP REPAIR KIT KIT DE REPARATION DE LA POMPE	1					

FIG. 2 TOP COWLING — CAPOT SUPERIEUR

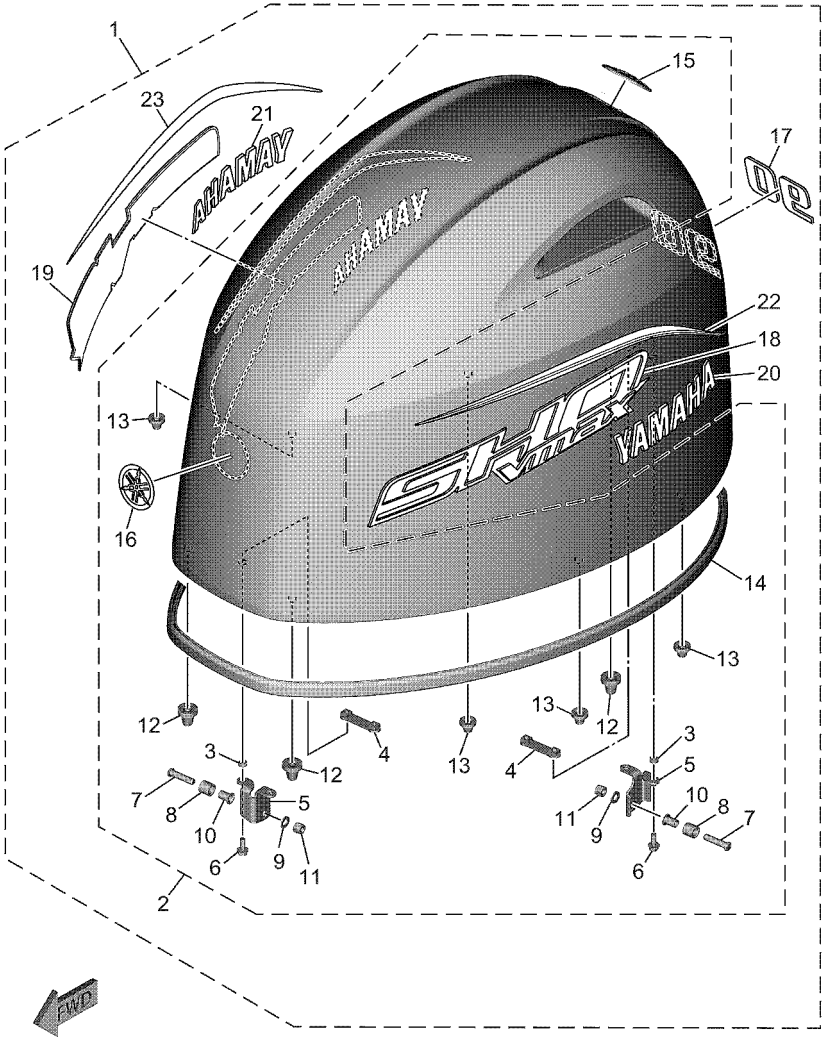

6HK8100DY020

REF. NO.	PART NO. N° PIECES	DESCRIPTION DESCRIPTION	6HK8					REMARKS REMARQUES
1	6HK–42610–10–NA	TOP COWLING ASSY CAPOT (ENS.)	1					
2	6HK–4261A–10–NA	.TOP COWLING W/O GRAPHICS .CAPOT SUPERIEUR SANS GRAPHIQUE	1					
3	90387–07046	..COLLAR ..COLLERETTE	4					
4	6EK–42646–00	..PLATE, CLAMP ..PLAQUE, PRESSE	2					
5	6FP–42647–00	..HOLDER, CLAMP BAND ..SUPPORT, SANDOW DE SERRAGE	2					
6	90105–06039	..BOLT, FLANGE ..BOULON, A COLLERETTE	4					
7	90111–08078	..BOLT, HEXAGON SOCKET BUTTON ..BOULON	2					
8	90387–10094	..COLLAR ..COLLERETTE	2					
9	92990–08600	..WASHER, PLATE ..RONDELLE, PLATE	2					
10	90387–08M45	..COLLAR ..COLLERETTE	2					
11	95780–08300	..NUT, FLANGE ..ECROU	2					
12	68F–42663–01	..DAMPER 2 ..AMORTISSEUR 2	3					
13	663–42662–01	..DAMPER ..AMORTISSEUR	4					
14	6FP–42615–02	..SEAL ..JOINT	1					
15	6DA–42697–00	..TUNING FORK MARK ..MARQUE, YAMAHA	1					
16	6EH–42697–00	..TUNING FORK MARK ..MARQUE, YAMAHA	1					
17	6HK–42678–10	.GRAPHIC, REAR .ADHESIF, ARRIERE	1					
18	6HK–42675–10	.GRAPHIC, SIDE 1 .EMBLEME	1					
19	6HK–42676–10	.GRAPHIC, SIDE 2 .EMBLEME	1					
20	6HK–2153A–00	.EMBLEM, YAMAHA .EMBLEME, YAMAHA	1					
21	6HK–2153B–00	.EMBLEM, YAMAHA .EMBLEME, YAMAHA	1					
22	6FN–42683–00	.MARK, COWLING .ADHESIF, CAPOT	1					
23	6FN–42684–00	.MARK, COWLING .ADHESIF, CAPOT	1					

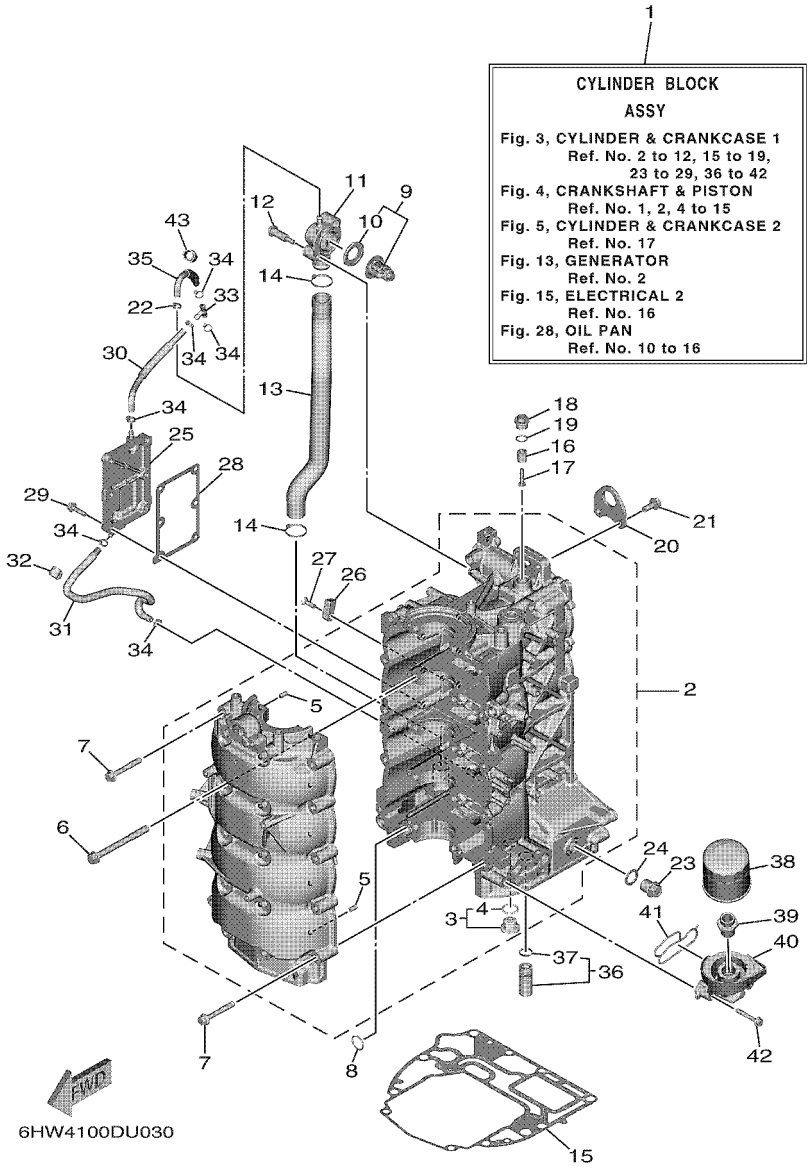

FIG. 3 CYLINDER & CRANKCASE 1 — CYLINDRE & CARTER 1

REF. NO.	PART NO. N° PIECES	DESCRIPTION DESCRIPTION	6HK8					REMARKS REMARQUES
1	6FP–W009B–11–9S	CYLINDER BLOCK ASSY CYLINDRE GROUPE (ENS.)	1					
2	6FP–15109–10–9S	CRANKCASE ASSY CARTER DE MOTEUR COMPLET	1					
3	6EK–11313–00	.PLUG, BLIND .PLOT, BORGNE	1					
4	93210–207A0	..O-RING ..JOINT TORIQUE	1					
5	93606–12019	.PIN, DOWEL .GOUPILLE	10					
6	90119–10057	BOLT, WITH WASHER BOULON, AVEC RONDELLE	10					
7	90105–08170	BOLT, FLANGE BOULON, A COLLERETTE	10					
8	93210–19MJ1	O-RING JOINT TORIQUE	1					
9	6FP–12411–00	THERMOSTAT THERMOSTAT	1					
10	6EK–12412–00	.SEAL, THERMOSTAT .JOINT, THERMOSTAT	1					
11	6EK–12413–00	COVER, THERMOSTAT COUVERCLE, THERMOSTAT	1					
12	90109–06286	BOLT BOULON	2					
13	6EK–1243A–00	HOSE 1 DURITE 1	1					
14	90465–11M59	CLAMP BRIDE	2					
15	6EK–11351–01	GASKET, CYLINDER JOINT, D'EMBASE	1					
16	6G8–11325–00	ANODE ANODE	1					
17	98980–05025	SCREW, BIND VIS, DE PRESSION	1					
18	6G8–11197–A0	PLUG, BLIND PLOT, BORGNE	1					
19	93210–13M63	O-RING JOINT TORIQUE	1					
20	6FP–11119–00	HANGER, ENGINE ANNEAU, LEVAGE	1					
21	95D95–08020	BOLT, FLANGE DEEP RECESS BOULON FIXATION	2					
22	90465–11M10	CLAMP BRIDE	1					
23	90340–18M09	PLUG, STRAIGHT SCREW PLOT, FILETE DROIT	1					
24	90201–186F1	WASHER, PLATE RONDELLE, PLATE	1					
25	6FP–15414–00–9S	COVER 1 COUVERCLE 1	1					
26	63P–11325–01	ANODE ANODE	1					
27	90151–06M02	SCREW, COUNTERSUNK VIS, TETE NOYEE	1					

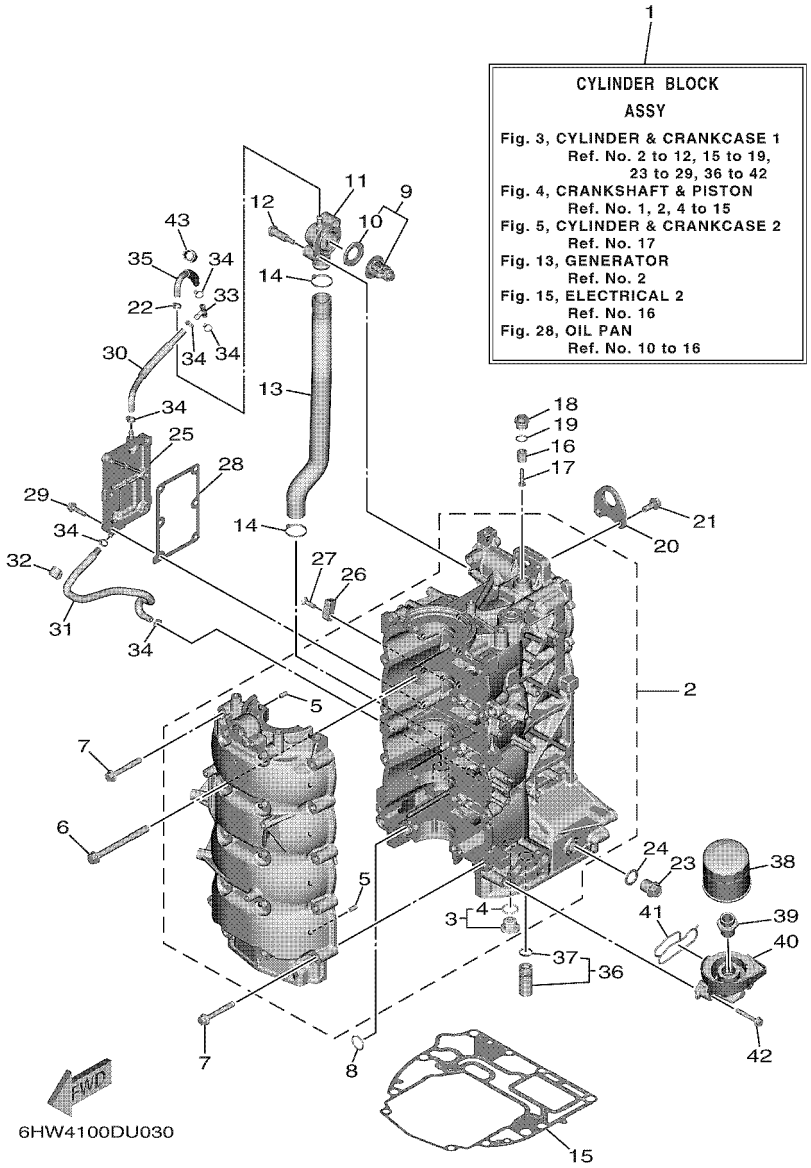

FIG. 3 CYLINDER & CRANKCASE 1 — CYLINDRE & CARTER 1

REF. NO.	PART NO. N° PIECES	DESCRIPTION DESCRIPTION	6HK8					REMARKS REMARQUES
28	6FP–15353–00	GASKET, DRAIN JOINT, PLOT DE VIDANGE	1					
29	90105–06037	BOLT, FLANGE BOULON, A COLLERETTE	6					
30	6FP–12483–00	PIPE 3 DURITE 3	1					
31	6FP–12484–00	PIPE 4 DURITE 4	1					
32	90465–08M83	CLAMP BRIDE	1					
33	688–24378–00	PIPE, JOINT 3 DURITE RACCORDEMENT 3	1					
34	90465–11M10	CLAMP BRIDE	6					
35	6FP–12485–00	PIPE 5 DURITE 5	1					
36	6EK–13490–00	RELIEF VALVE ASSY SOUPAPE DE SECURITE COMPLET	1					
37	6CB–13473–00	.O-RING .JOINT TORIQUE	1					
38	5GH–13440–71	ELEMENT ASSY, OIL CLEANER ELEMENT, FILTRE A HUILE	1					
39	90401–20007	BOLT, UNION BOULON, RACCORD	1					
40	6FP–13446–00	CONNECTOR CONNECTEUR	1					
41	6FP–13475–00	GASKET JOINT	1					
42	90105–06151	BOLT, FLANGE BOULON, A COLLERETTE	3					
43	90464–13227	CLAMP BRIDE	1					

FIG. 4 CRANKSHAFT & PISTON — VILEBREQUIN & PISTON

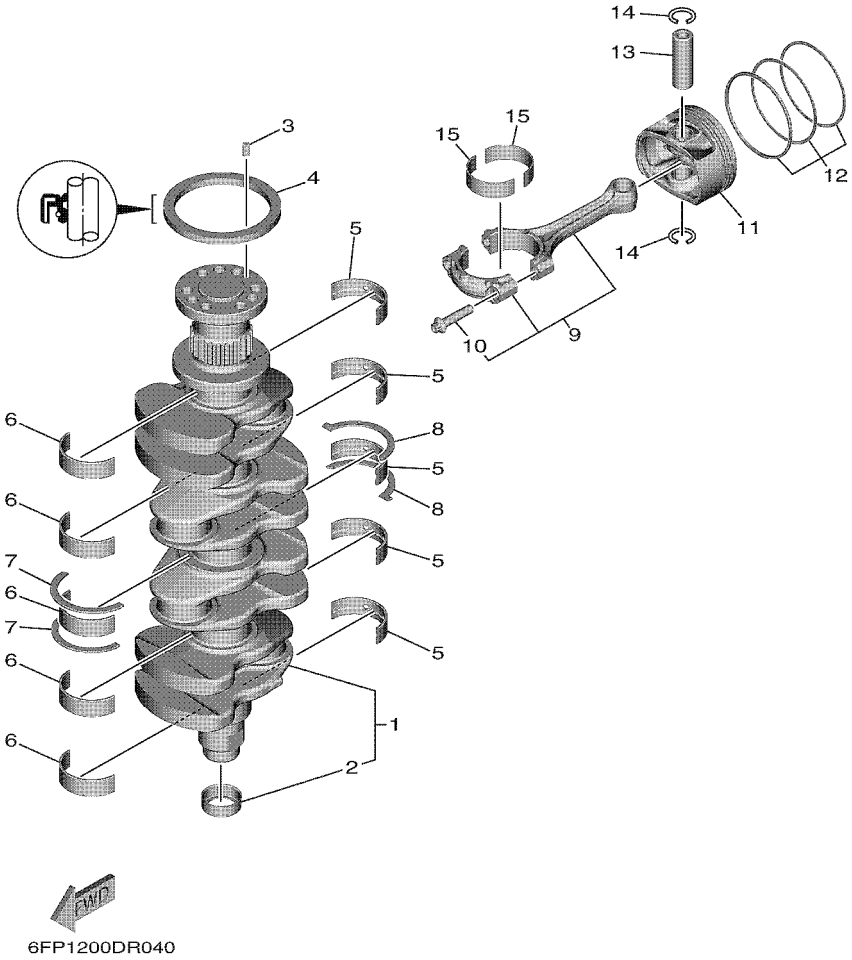

REF. NO.	PART NO. N° PIECES	DESCRIPTION DESCRIPTION	6HK8					REMARKS REMARQUES
1	6EK–11410–01	CRANKSHAFT VILEBREQUIN COMPLET	1					
2	6CB–11478–00	.COLLAR .COLLERETTE	1					
3	93606–12019	PIN, DOWEL GOUPILLE	1					
4	93102–85008	OIL SEAL JOINT SPY	1					
5	6EK–11416–00	PLANE BEARING, CRANKSHAFT 1 COUSSINET DE VILEBREQUIN 1	5					UR YELLOW UR YELLOW
	6EK–11416–10	PLANE BEARING, CRANKSHAFT 1 COUSSINET DE VILEBREQUIN 1	5					UR GREEN UR GREEN
	6EK–11416–20	PLANE BEARING, CRANKSHAFT 1 COUSSINET DE VILEBREQUIN 1	5					UR BLUE UR BLUE
	6EK–11416–30	PLANE BEARING, CRANKSHAFT 1 COUSSINET DE VILEBREQUIN 1	5					UR RED UR RED
	6EK–11416–40	PLANE BEARING, CRANKSHAFT 1 COUSSINET DE VILEBREQUIN 1	5					UR BLACK UR BLACK
6	6EK–11417–00	PLANE BEARING, CRANKSHAFT 2 COUSSINET DE VILEBREQUIN 2	5					UR YELLOW UR YELLOW
	6EK–11417–10	PLANE BEARING, CRANKSHAFT 2 COUSSINET DE VILEBREQUIN 2	5					UR GREEN UR GREEN
	6EK–11417–20	PLANE BEARING, CRANKSHAFT 2 COUSSINET DE VILEBREQUIN 2	5					UR BLUE UR BLUE
	6EK–11417–30	PLANE BEARING, CRANKSHAFT 2 COUSSINET DE VILEBREQUIN 2	5					UR RED UR RED
	6EK–11417–40	PLANE BEARING, CRANKSHAFT 2 COUSSINET DE VILEBREQUIN 2	5					UR BLACK UR BLACK
7	6EK–11426–01	BEARING, THRUST 1 ROULEMENT DE BUTEE 1	2					
8	6EK–11427–00	BEARING, THRUST 2 ROULEMENT DE BUTEE 2	2					
9	6EK–W1165–00	CONNECTING ROD ASSY BIELLE COMPLETTE	4					
10	K1C–A3275–00	.BOLT, CONNECTING ROD .BOULON, BIELLE	2					
11	6FP–11631–01	PISTON (STD) PISTON (STD)	4					
	6FP–11635–01	PISTON (0.25MM O/S) PISTON (0.25MM O/S)	4					AP AP
12	6EK–11603–01	PISTON RING SET (STD) JEU DE SEGMENTS (STD)	4					
	6EK–11604–01	PISTON RING SET (0.25MM O/S) JEU DE SEGMENTS (0.25MM O/S)	4					AP AP
13	6EK–11633–00	PIN, PISTON AXE, PISTON	4					
14	93450–19052	CIRCLIP CIRCLIP	8					
15	6EK–11656–00	PLANE BEARING, CONNECTING ROD ROULEMENT DE BIELLE	8					UR YELLOW UR YELLOW
	6EK–11656–10	PLANE BEARING, CONNECTING ROD ROULEMENT DE BIELLE	8					UR GREEN UR GREEN
	6EK–11656–20	PLANE BEARING, CONNECTING ROD ROULEMENT DE BIELLE	8					UR BLUE UR BLUE

FIG. 4 CRANKSHAFT & PISTON — VILEBREQUIN & PISTON

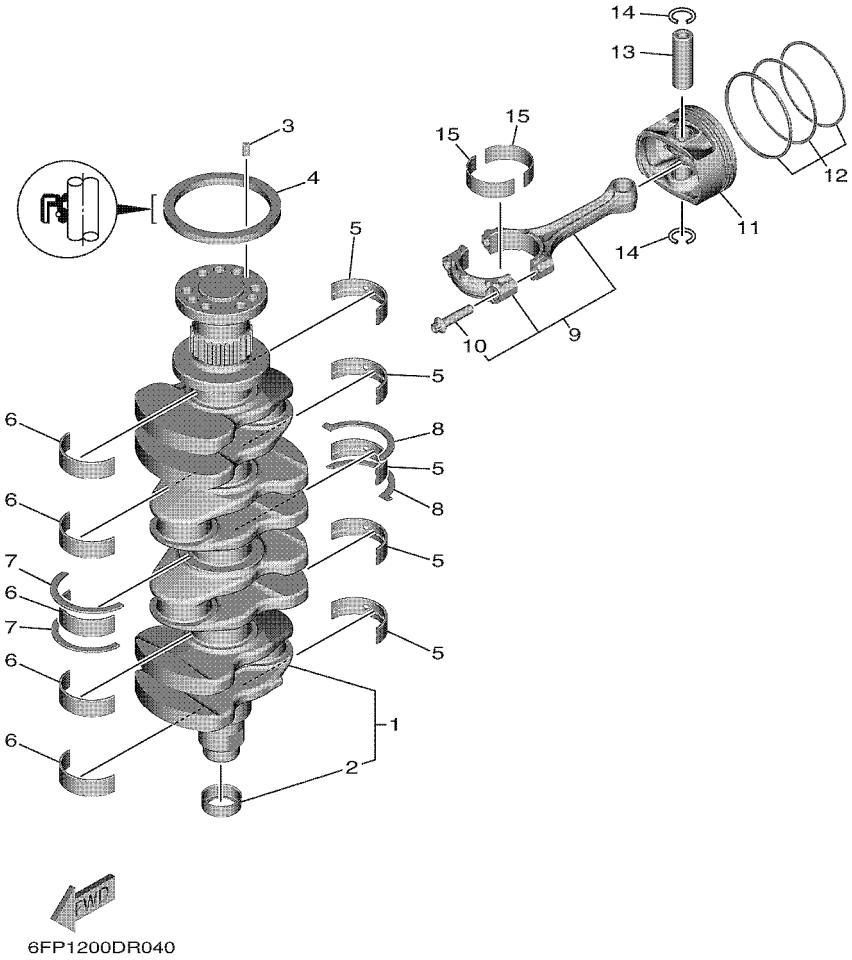

REF. NO.	PART NO. N° PIECES	DESCRIPTION DESCRIPTION	6HK8					REMARKS REMARQUES
15	6EK–11656–30	PLANE BEARING, CONNECTING ROD ROULEMENT DE BIELLE	8					UR RED UR RED
	6EK–11656–40	PLANE BEARING, CONNECTING ROD ROULEMENT DE BIELLE	8					UR BLACK UR BLACK

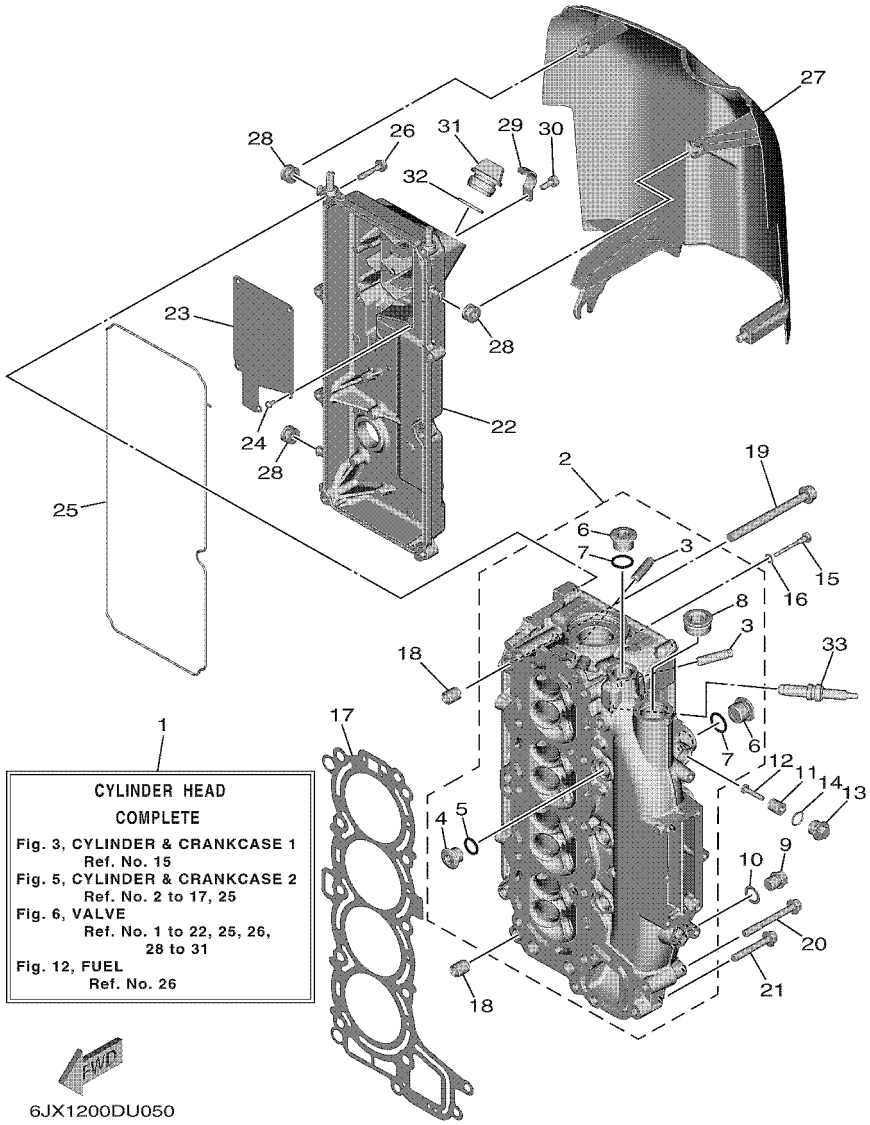

FIG. 5 CYLINDER & CRANKCASE 2 — CYLINDRE & CARTER 2

REF. NO.	PART NO. N° PIECES	DESCRIPTION DESCRIPTION	6HK8					REMARKS REMARQUES
1	6FP–W009A–10–9S	CYLINDER HEAD COMPLETE CULASSE (ENS.)	1					
2	6FP–W1111–00–9S	HEAD, CYLINDER 1 CULASSE	1					
3	6DA–11133–10	.GUIDE, VALVE 1 .GUIDE, SOUPAPE 1	16					
4	90340–99001	.PLUG, STRAIGHT SCREW .PLOT, FILETE DROIT	3					
5	93210–14579	.O-RING .JOINT TORIQUE	3					
6	90340–97002	.PLUG, STRAIGHT SCREW .PLOT, FILETE DROIT	4					
7	93210–18322	.O-RING .JOINT TORIQUE	4					
8	90340–27001	.PLUG, STRAIGHT SCREW .PLOT, FILETE DROIT	1					
9	90340–14M06	PLUG, STRAIGHT SCREW PLOT, FILETE DROIT	1					
10	90430–14115	GASKET JOINT	1					
11	6G8–11325–00	ANODE ANODE	2					
12	98980–05025	SCREW, BIND VIS, DE PRESSION	2					
13	6G8–11197–A0	PLUG, BLIND PLOT, BORGNE	2					
14	93210–13M63	O-RING JOINT TORIQUE	2					
15	90109–06M65	BOLT BOULON	1					
16	90430–06014	GASKET JOINT	1					
17	6FP–11181–00	GASKET, CYLINDER HEAD 1 JOINT, DE CULASSE 1	1					
18	99530–14016	PIN, DOWEL GOUJON, D'ASSEMBLAGE	2					
19	90149–10072	SCREW VIS	10					
20	90105–08220	BOLT, FLANGE BOULON, A COLLERETTE	1					
21	90105–08175	BOLT, FLANGE BOULON, A COLLERETTE	2					
22	6FP–11191–00	COVER, CYLINDER HEAD 1 COUVERCLE, CULASSE 1	1					
23	6FP–11168–00	COVER, BREATHER COUVERCLE, RENIFLARD	1					
24	97607–04208	SCREW, WITH WASHER VIS, AVEC RONDELLE	5					
25	6FP–11193–00	GASKET, HEAD COVER 1 JOINT, COUVERCLE DE CULASSE 1	1					
26	95D95–06030	BOLT, FLANGE DEEP RECESS BOULON FIXATION	8					
27	6FP–11192–00	COVER, CYLINDER HEAD 2 COUVERCLE, CULASSE 2	1					

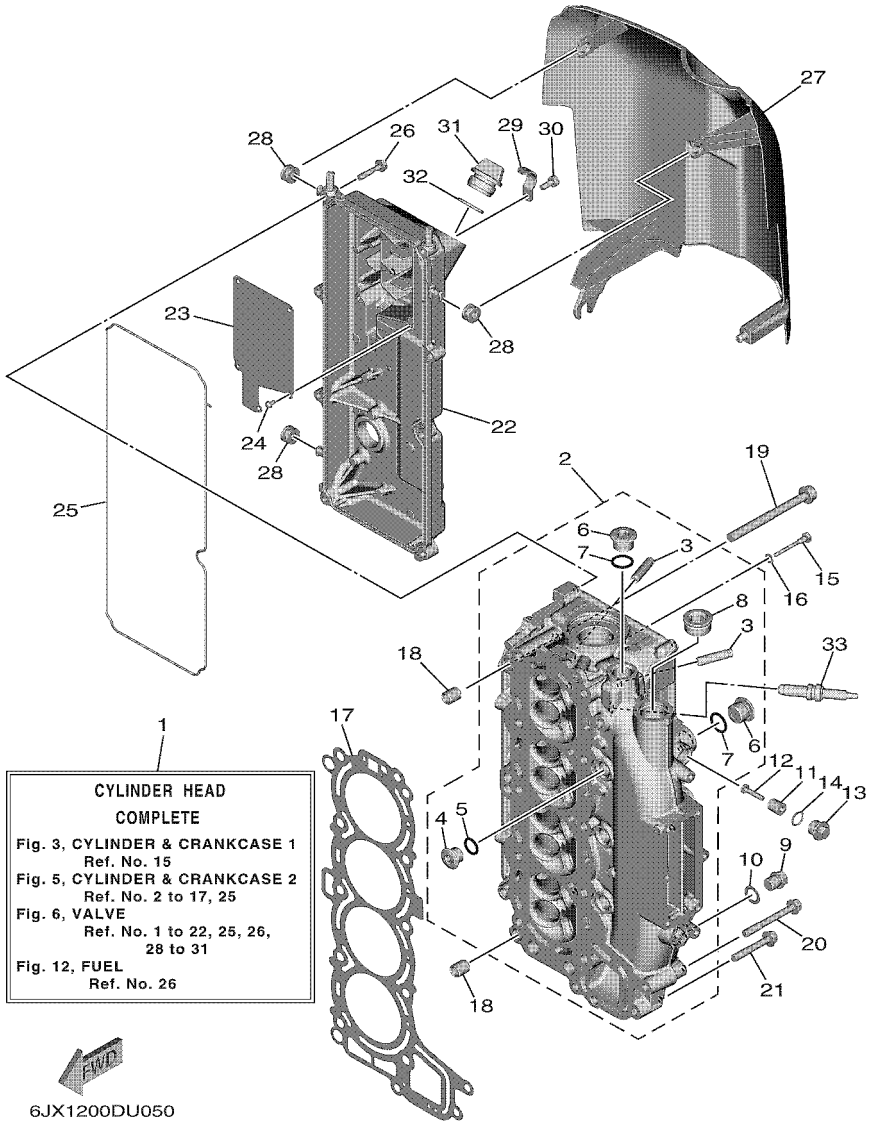

FIG. 5 CYLINDER & CRANKCASE 2 — CYLINDRE & CARTER 2

REF. NO.	PART NO. N° PIECES	DESCRIPTION DESCRIPTION	6HK8					REMARKS REMARQUES
28	90480–12314	GROMMET PASSE-FIL	3					
29	6CJ–13428–00	BRACKET, STRAINER 1 SUPPORT, FILTRE 1	1					
30	97E95–06516	BOLT, HEXAGON W/W DEEP RECESS VIS HEXAGONAL AVC RONDELLE	1					
31	6G8–15363–00	PLUG, OIL PLOT, HUILE	1					
32	93210–24M79	O-RING JOINT TORIQUE	1					
33	94702–00440	PLUG, SPARK (NGK LKR6E 9N) BOUGIE D,ALLUMAGE NGK LKR6E 9N	4					

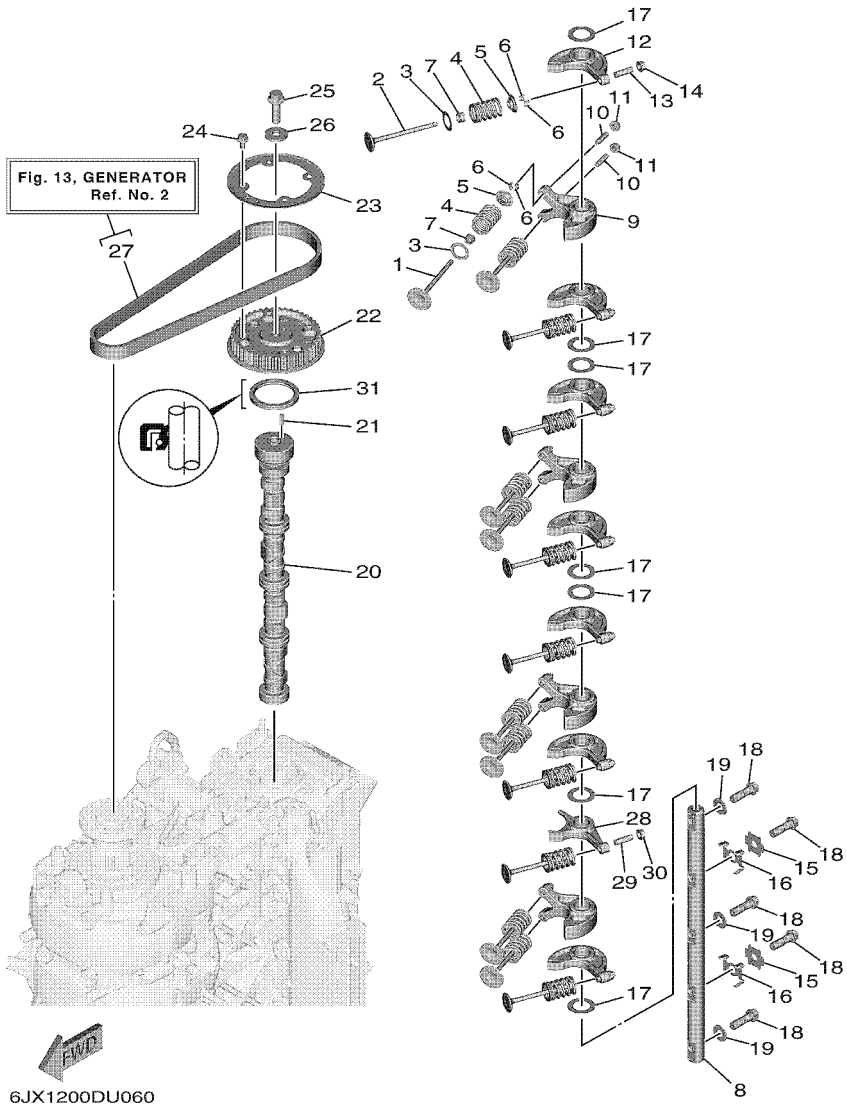

FIG. 6 VALVE SOUPAPE

REF. NO.	PART NO. N° PIECES	DESCRIPTION DESCRIPTION	6HK8					REMARKS REMARQUES
1	6FP–12111–00	VALVE, INTAKE SOUPAPE, ADMISSION	8					
2	6FP–12121–00	VALVE, EXHAUST SOUPAPE, ECHAPPEMENT	8					
3	62Y–12116–00	SEAT, VALVE SPRING SIEGE, RESSORT DE SOUPAPE	16					
4	6FP–12113–00	SPRING, VALVE INNER RESSORT DE SOUPAPE, INTERNE	16					
5	30X–12117–00	RETAINER, VALVE SPRING BUTEE DE RESSORT DE SOUPAPE	16					
6	30X–12118–00	LOCK, VALVE SPRING RETAINER FRAISE, SOUPAPE	32					
7	51Y–12119–00	SEAL, VALVE STEM JOINT, QUEUE DE SOUPAPE	16					
8	6FP–12146–00	SHAFT, ROCKER AXE, CULBUTEUR	1					
9	6FP–12151–00	ARM, VALVE ROCKER CULBUTEUR	4					
10	6C5–12159–00	SCREW, VALVE ADJUSTING VIS, REGLAGE DE SOUPAPE	8					
11	6C5–12158–00	NUT, LOCK CONTRE-ECROU	8					
12	6FP–12161–00	ARM, VALVE ROCKER 2 CULBUTEUR 2	7					
13	6C5–12159–10	SCREW, VALVE ADJUSTING VIS, REGLAGE DE SOUPAPE	7					
14	6C5–12158–10	NUT, LOCK CONTRE-ECROU	7					
15	6FP–12231–00	GUIDE, STOPPER 1 GUIDE, BUTEE 1	2					
16	6FP–12233–00	PLATE, GUIDE STOPPER 1 PLAQUE, GUIDE BUTEE 1	2					
17	90201–21016	WASHER, PLATE RONDELLE, PLATE	7					
18	90401–10050	BOLT, UNION BOULON, RACCORD	5					
19	92990–10200	WASHER, PLAIN RONDELLE, PLATE	3					
20	6FP–12171–00	CAMSHAFT 1 ARBRE A CAMES 1	1					
21	93605–17002	PIN, DOWEL AXE	1					
22	6FP–11537–00	GEAR, DRIVEN PIGNON SECONDAIRE	1					
23	6DA–11557–00	WASHER 1 RONDELLE 1	1					
24	95D95–06012	BOLT, FLANGE DEEP RECESS BOULON FIXATION	4					
25	95817–10035	BOLT, FLANGE BOULON, A COLLERETTE	1					
26	90201–10144	WASHER, PLATE RONDELLE, PLATE	1					
27	6FP–W4624–00	BELT (WITH ROTOR BOLTS) COURROIE (AVEC BOULON)	1					

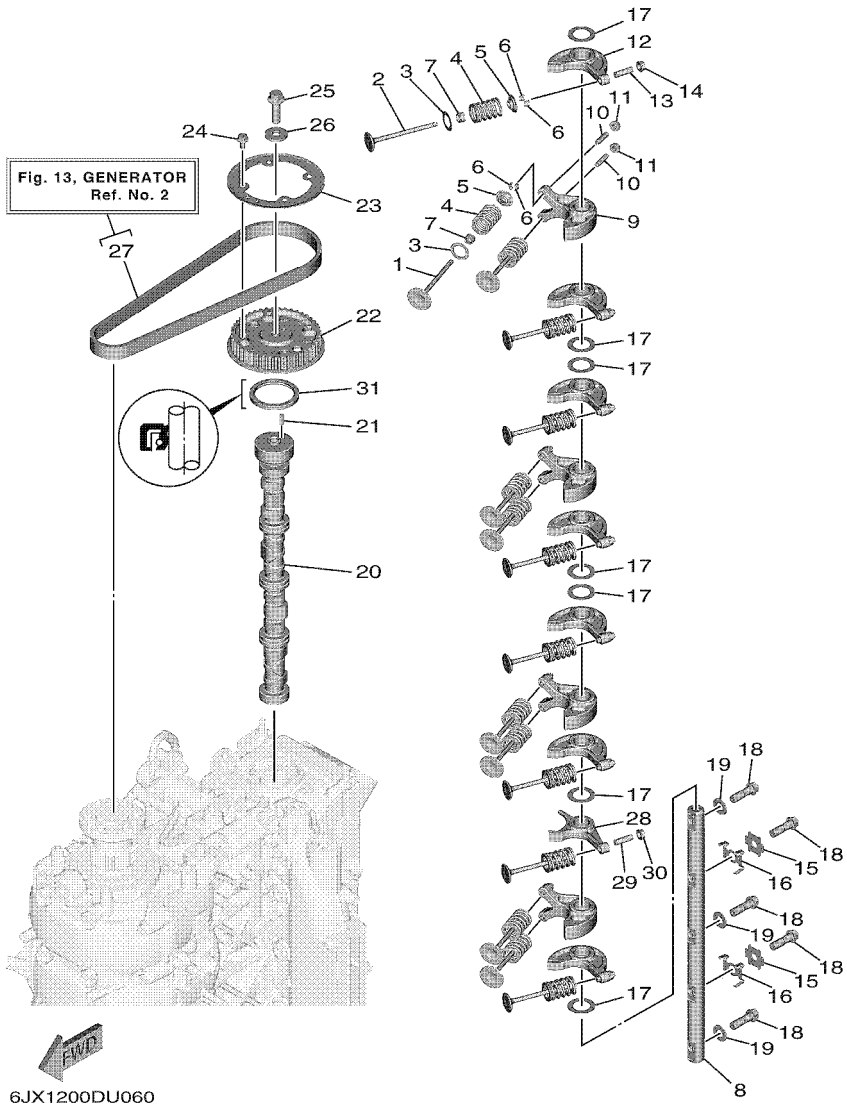

FIG. 6 VALVE — SOUPAPE

REF. NO.	PART NO. N° PIECES	DESCRIPTION DESCRIPTION	6HK8					REMARKS REMARQUES
28	6FP–12162–10	ARM, VALVE ROCKER 3 CULBUTEUR 3	1					
29	6C5–12159–10	SCREW, VALVE ADJUSTING VIS, REGLAGE DE SOUPAPE	1					
30	6C5–12158–10	NUT, LOCK CONTRE-ECROU	1					
31	93102–48017	OIL SEAL JOINT SPY	1					

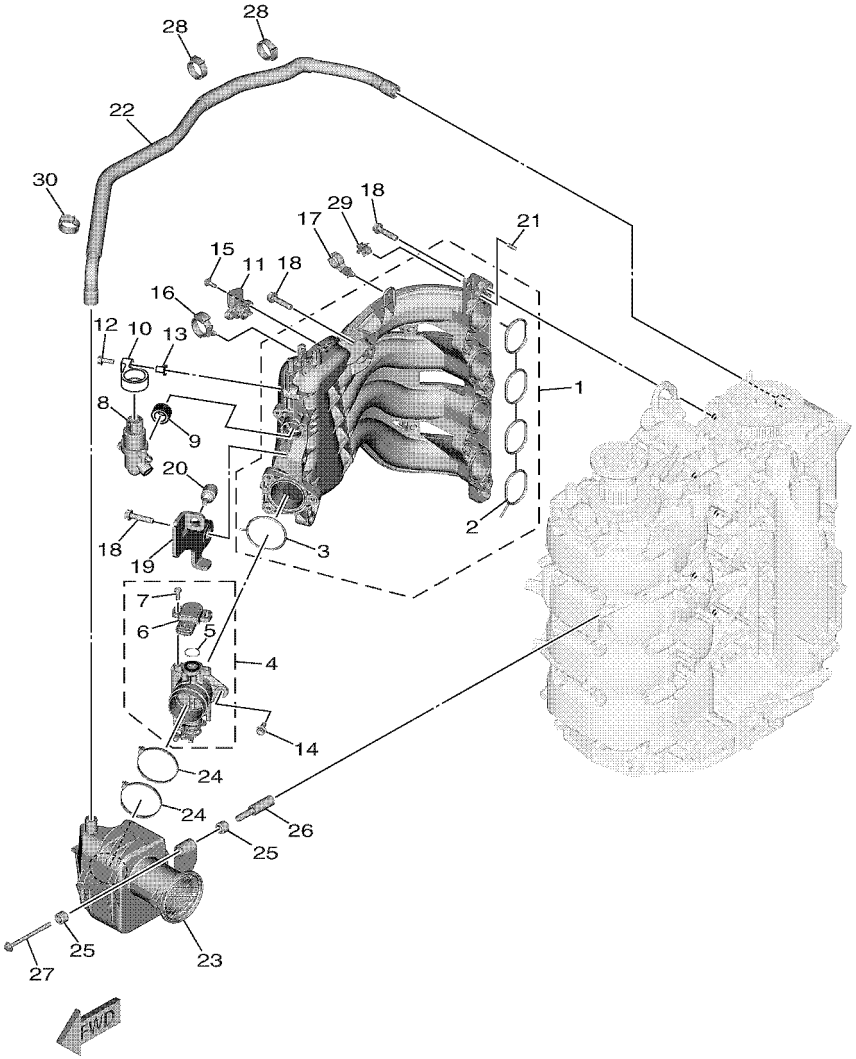

6JX1200DU070

FIG. 7 INTAKE 1 — ADMISSION 1

REF. NO.	PART NO. N° PIECES	DESCRIPTION DESCRIPTION	6HK8					REMARKS REMARQUES
1	6FP–13641–00	MANIFOLD, INTAKE 1 TUBULURE, ADMISSION 1	1					
2	6FP–13645–00	.GASKET, MANIFOLD 1 .JOINT, TUBULURE 1	1					
3	6FP–13646–00	.GASKET, MANIFOLD 2 .JOINT, TUBULURE 2	1					
4	6FP–13751–01	BODY, THROTTLE 1 CARTER 1	1					
5	93210–17014	.O-RING .JOINT TORIQUE	1					
6	8GL–85885–01	.THROTTLE SENSOR ASSY .SENSITOMETRE (ENS.)	1					
7	90149–05041	.SCREW .VIS	2					
8	6C5–13713–02	VALVE, IDLE SPEED CONTROL SOUPAPE, AJUSTEMENT DE VITESSE	1					
9	6FP–13476–00	GASKET JOINT	1					
10	6FP–13381–00	DAMPER AMORTISSEUR	1					
11	68F–83688–10	SENSOR ASSY SONDE (ENS.)	1					
12	90119–06309	BOLT, WITH WASHER BOULON, AVEC RONDELLE	1					
13	90387–06289	COLLAR COLLERETTE	1					
14	6C5–14496–00	BOLT BOULON	3					
15	6C5–81146–10	SCREW 2 VIS 2	2					
16	90464–12183	CLAMP BRIDE	1					
17	90464–17006	CLAMP BRIDE	1					
18	90119–08020	BOLT, WITH WASHER BOULON, AVEC RONDELLE	8					
19	6FP–13371–00	PLATE PLAQUE	1					
20	6FP–14435–00	GROMMET RONDELLE CAOUTCHOUC	1					
21	91690–50014	PIN, SPRING AGRAFFE	2					
22	6FP–15373–00	PIPE, BREATHER DURITE DE RENIFLARD	1					
23	6FP–14440–02	SILENCER ASSY, INTAKE SIENCIEUX D'ADMISSION	1					
24	90464–65001	CLAMP BRIDE	2					
25	90386–08001	BUSH DOUILLE	2					
26	90387–07013	COLLAR COLLERETTE	1					
27	90119–06307	BOLT, WITH WASHER BOULON, AVEC RONDELLE	1					

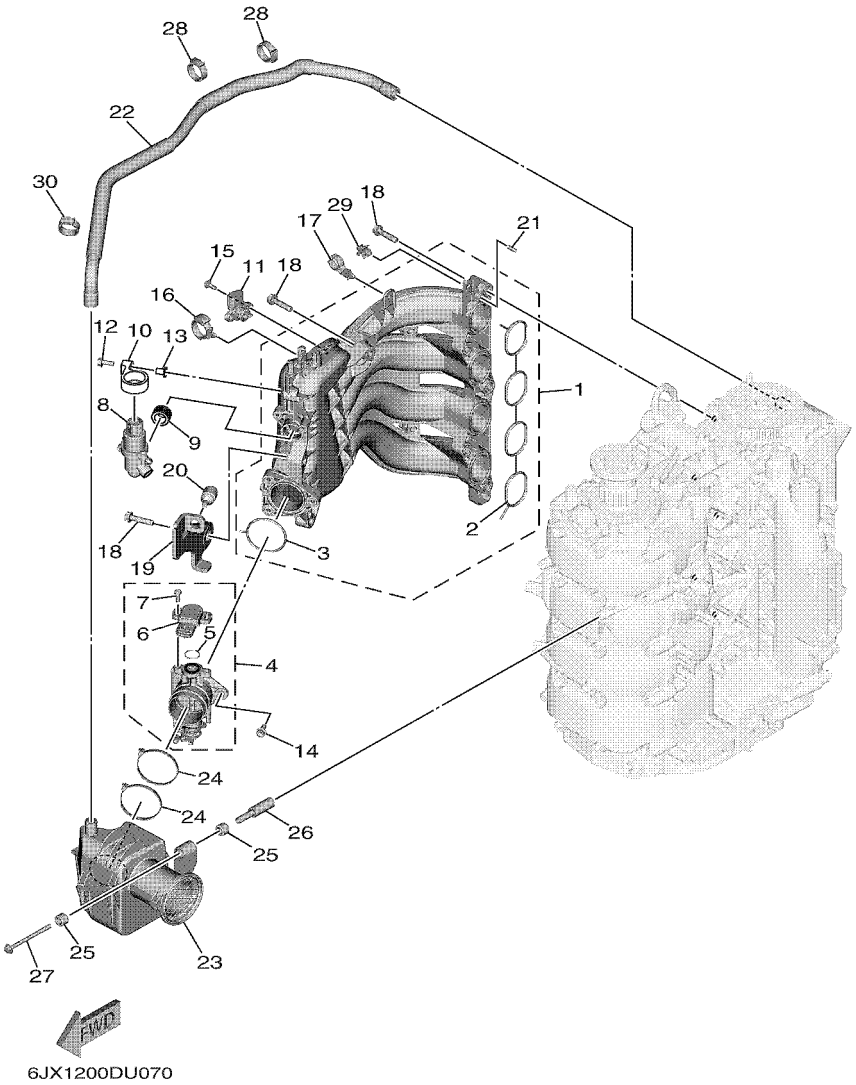

FIG. 7 INTAKE 1 — ADMISSION 1

REF. NO.	PART NO. N° PIECES	DESCRIPTION DESCRIPTION	6HK8					REMARKS REMARQUES
28	90464–26001	CLAMP BRIDE	2					
29	90464–09M47	CLAMP BRIDE	1					
30	90464–26001	CLAMP BRIDE	1					

FIG. 8 INTAKE 2 — ADMISSION 2

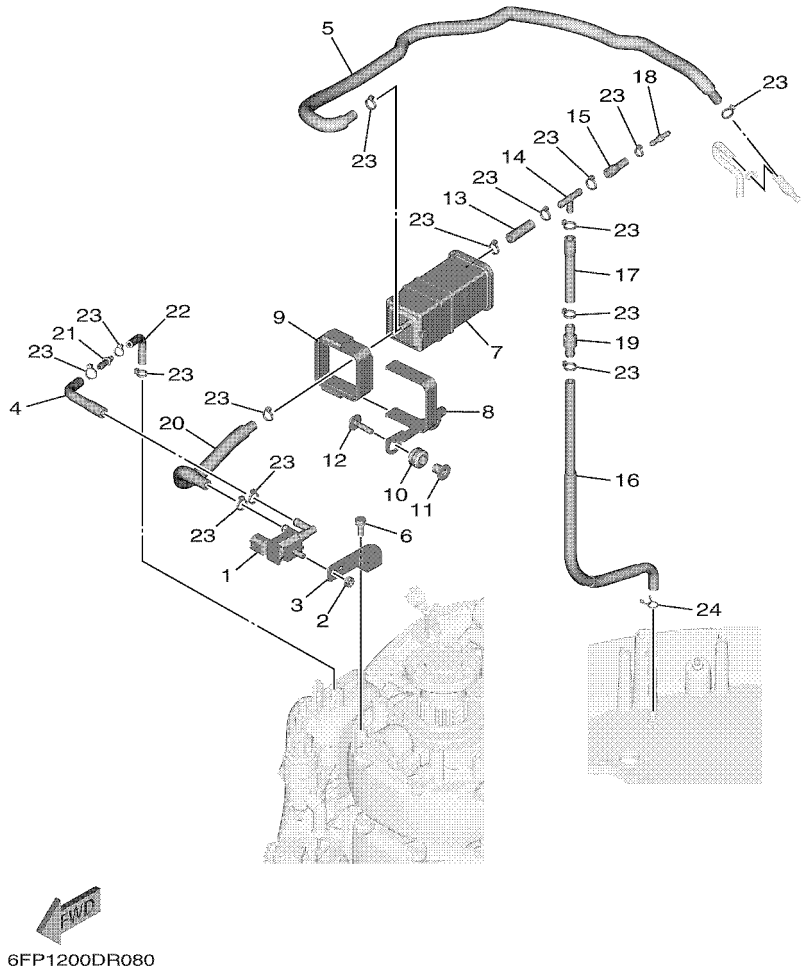

REF. NO.	PART NO. N° PIECES	DESCRIPTION DESCRIPTION	6HK8					REMARKS REMARQUES
1	6C5–86120–00	SOLENOID VALVE ASSY SOLENOIDE	1					
2	95380–06600	NUT, HEXAGON ECROU	1					
3	6FP–86112–00	STAY, SOLENOID SUPPORT, SOLENOIDE	1					
4	6FP–2416A–00	HOSE DURITE	1					
5	6FP–1475A–00	PIPE 1 DURITE 1	1					
6	97E95–06516	BOLT, HEXAGON W/W DEEP RECESS VIS HEXAGONAL AVC RONDELLE	1					
7	69J–24170–00	CANISTER ASSY BANDE, RASERVOIR A ESSENCE	1					
8	6FP–2134X–00	BRACKET, CANISTER SUPPORT	1					
9	6FP–2419E–01	COVER, CANISTER COUVERCLE	1					
10	90480–10M23	GROMMET PASSE-FIL	2					
11	90387–06289	COLLAR COLLERETTE	2					
12	90119–06309	BOLT, WITH WASHER BOULON, AVEC RONDELLE	2					
13	6AW–13545–10	HOSE 1 DURITE 1	1					
14	688–24378–00	PIPE, JOINT 3 DURITE RACCORDEMENT 3	1					
15	6FP–13546–00	HOSE 2 DURITE 2	1					
16	6FP–13547–00	HOSE 3 DURITE 3	1					
17	6FP–13548–00	HOSE, AIR 4 DURITE, A AIR 4	1					
18	6E5–21744–00	BREATHER RENIFLARD	1					
19	63D–21744–00	BREATHER RENIFLARD	1					
20	6FP–1475F–00	PIPE 3 DURITE 3	1					
21	6EK–14989–00	ORIFICE, AIR VENT OR1F1CE	1					
22	6FP–1475G–00	PIPE 4 DURITE 4	1					
23	90465–11M10	CLAMP BRIDE	15					
24	90467–09M17	CLIP JONC	1					

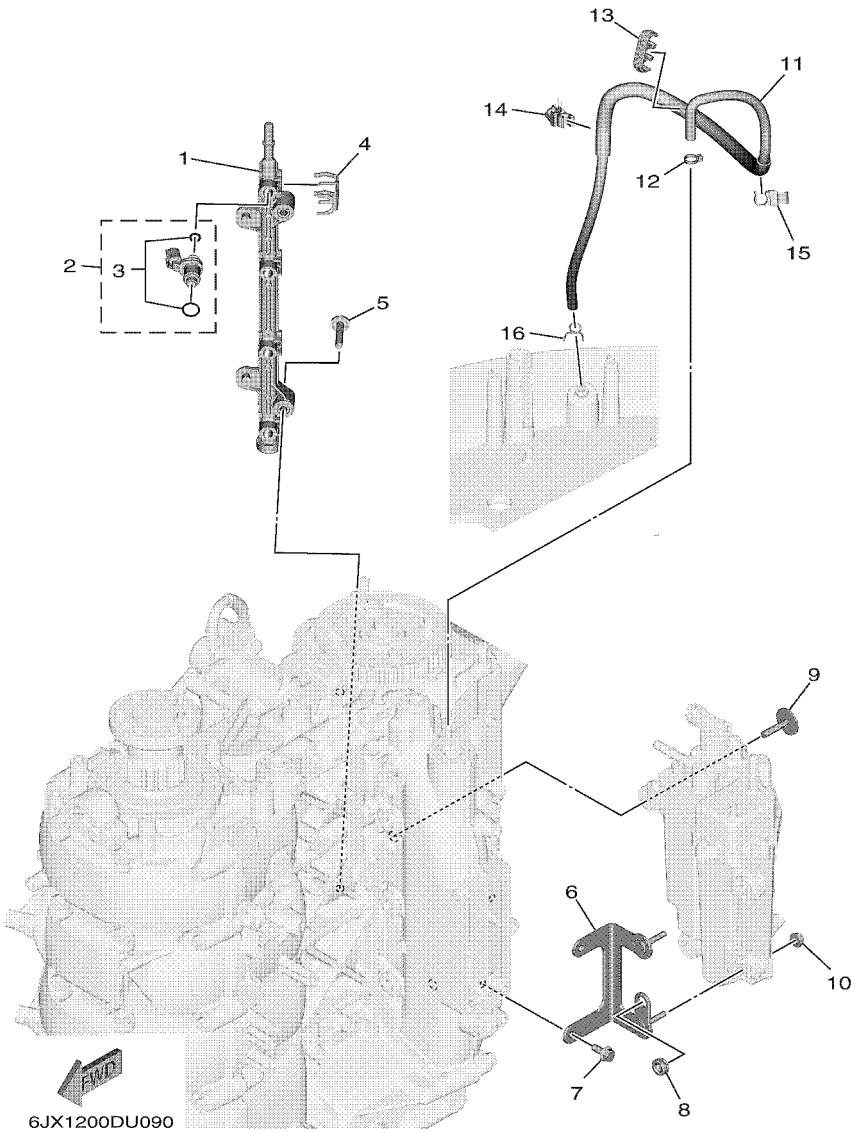

FIG. 9 INTAKE 3 — ADMISSION 3

REF. NO.	PART NO. N° PIECES	DESCRIPTION DESCRIPTION	6HK8					REMARKS REMARQUES
1	6FP–13161–00	PIPE, DELIVERY 1 DURITE REFOULEMENT 1	1					
2	6FP–13761–01	INJECTOR INJECTEUR	4					
3	6C5–1410B–00	.PACKING KIT .POCHETTE DE JOINTS	1					
4	6FP–13577–00	CLIP AGRAFE	4					
5	90119–06296	BOLT, WITH WASHER BOULON, AVEC RONDELLE	2					
6	6FP–24422–00	PLATE PLAQUETTE	1					
7	95D95–06014	BOLT, FLANGE DEEP RECESS BOULON FIXATION	2					
8	90480–11006	GROMMET PASSE-FIL	1					
9	90119–06291	BOLT, WITH WASHER BOULON, AVEC RONDELLE	2					
10	90179–06M28	NUT ECROU	2					
11	6FP–42542–00	PIPE TUYAU	1					
12	90465–11M10	CLAMP BRIDE	1					
13	90464–10011	CLAMP BRIDE	1					
14	90464–09021	CLAMP BRIDE	1					
15	90464–09013	CLAMP BRIDE	1					
16	90467–08M18	CLIP JONC	1					

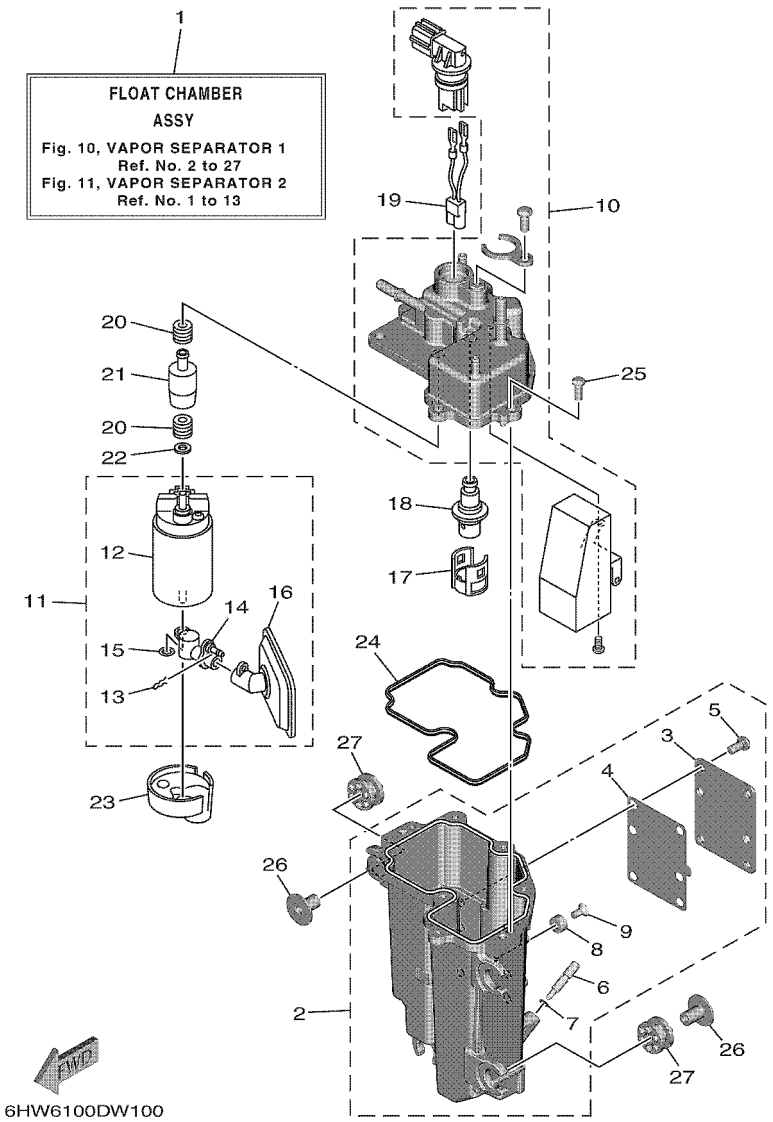

FIG. 10 VAPOR SEPARATOR 1 — VAPEUR SEPARATEUR 1

REF. NO.	PART NO. N° PIECES	DESCRIPTION DESCRIPTION	6HK8					REMARKS REMARQUES
1	6FP–14180–03	FLOAT CHAMBER ASSY CUVE DE FLOTTEUR	1					
2	6FP–14960–00	BODY ASSY CARTER (ENS.)	1					
3	6FP–24452–00	.COVER, COOLER .COUVERCLE DE RADIATEUR	1					
4	6FP–24462–00	.GASKET, COOLER .JOINT DE RADIATEUR	1					
5	6FP–14591–00	.SCREW .VIS	6					
6	6C5–14191–00	.PLUG, DRAIN .PLOT, VIDANGE	1					
7	6C5–14397–00	.O-RING .JOINT TORIQUE	1					
8	63P–11325–21	.ANODE .ANODE	1					
9	6FP–24444–00	.SCREW .VIS	1					
10	6FP–14182–01	COVER, FLOAT CHAMBER COUVERCLE, CUVE DE FLOTTEUR	1					
11	6FP–13910–01	FUEL PUMP ASSY POMPE A ESSENCE COMPLET	1					
12	6FP–13907–01	.FUEL PUMP COMP. .POMPE A CARBURANT COMP.	1					
13	6BG–14137–00	.CLIP .JONC	1					
14	6FP–13938–00	.JOINT .DURITE	1					
15	6C5–14127–10	.CLIP .JONC	1					
16	6FP–13915–00	.FILTER .FILTRE	1					
17	6FP–13927–00	SUPPORT SUPPORT	1					
18	6FP–13906–00	REGULATOR, PRESSURE REGULATEUR DE PRESSION	1					
19	6FP–87226–00	WIRE HARNESS ASSY ENS. FAISCEAU ELECTRIQUE	1					
20	6C5–13781–00	DAMPER, PUMP AMORTISSEUR, POMPE	2					
21	6FP–13132–00	ADAPTOR RACCORD	1					
22	6FP–13716–00	SPECER, FUEL PUMP COLLERETTE	1					
23	6FP–13593–01	DAMPER AMORTISSEUR	1					
24	6FP–14984–00	GASKET, FLOAT CHAMBER JOINT, CUVE DE FLOTTEUR	1					
25	6C5–14567–00	SCREW VIS	8					
26	90387–06M03	COLLAR COLLERETTE	4					
27	69L–85516–01	SPACER ENTRETOISE	4					

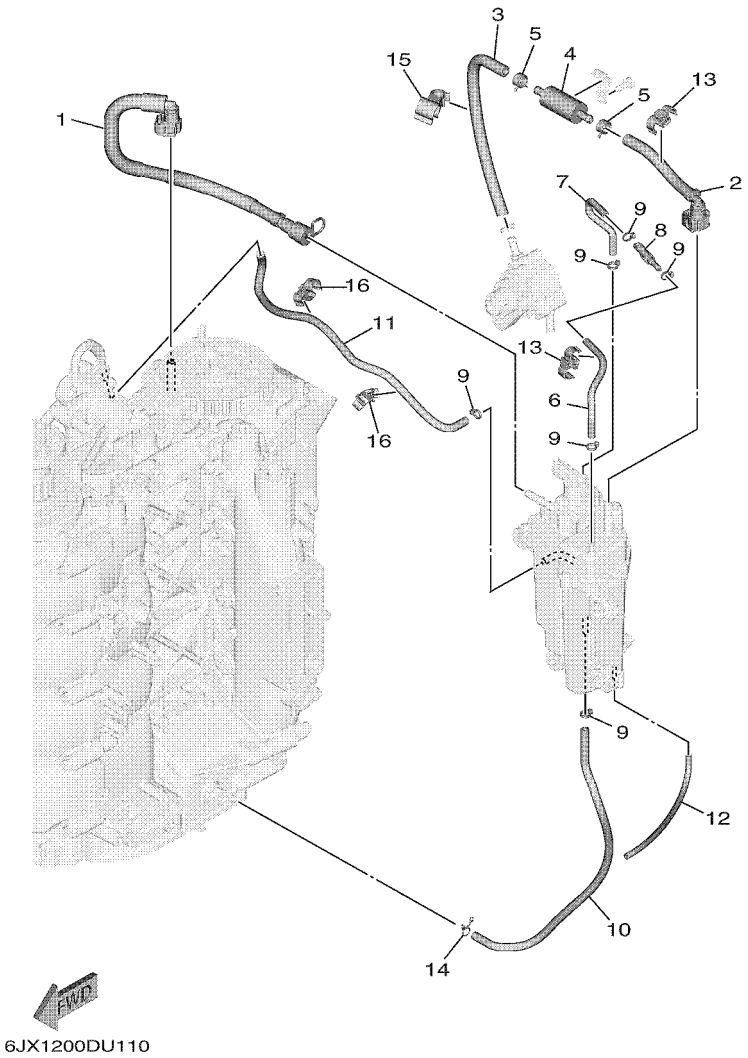

FIG. 11 VAPOR SEPARATOR 2 — VAPEUR SEPARATEUR 2

REF. NO.	PART NO. N° PIECES	DESCRIPTION DESCRIPTION	6HK8					REMARKS REMARQUES
1	6FP–13974–01	PIPE, FUEL 4 TUBE 4, CARBURANT	1					
2	6FP–24330–00	FUEL PIPE ASSY DURITE A ESSENCE	1					
3	6FP–13972–00	PIPE, FUEL 2 TUBE 2, CARBURANT	1					
4	6C5–24251–01	STRAINER 1 FILTRE 1	1					
5	6BG–24387–00	CLIP SANDOW	2					
6	6FP–13545–00	HOSE 1 DURITE 1	1					
7	6FP–13546–00	HOSE 2 DURITE 2	1					
8	6FP–24379–00	PIPE, JOINT 4 DURITE RACCORDEMENT 4	1					
9	90465–11M10	CLAMP BRIDE	6					
10	6FP–24324–00	PIPE 13 DURITE 13	1					
11	6FP–24325–00	PIPE 14 DURITE 14	1					
12	6BG–14149–00	PIPE DURITE	1					
13	6FP–21337–00	CLAMP, CABLE COLLIER, CABLE	2					
14	90467–08M18	CLIP JONC	1					
15	90464–15007	CLAMP BRIDE	1					
16	90464–12010	CLAMP BRIDE	2					

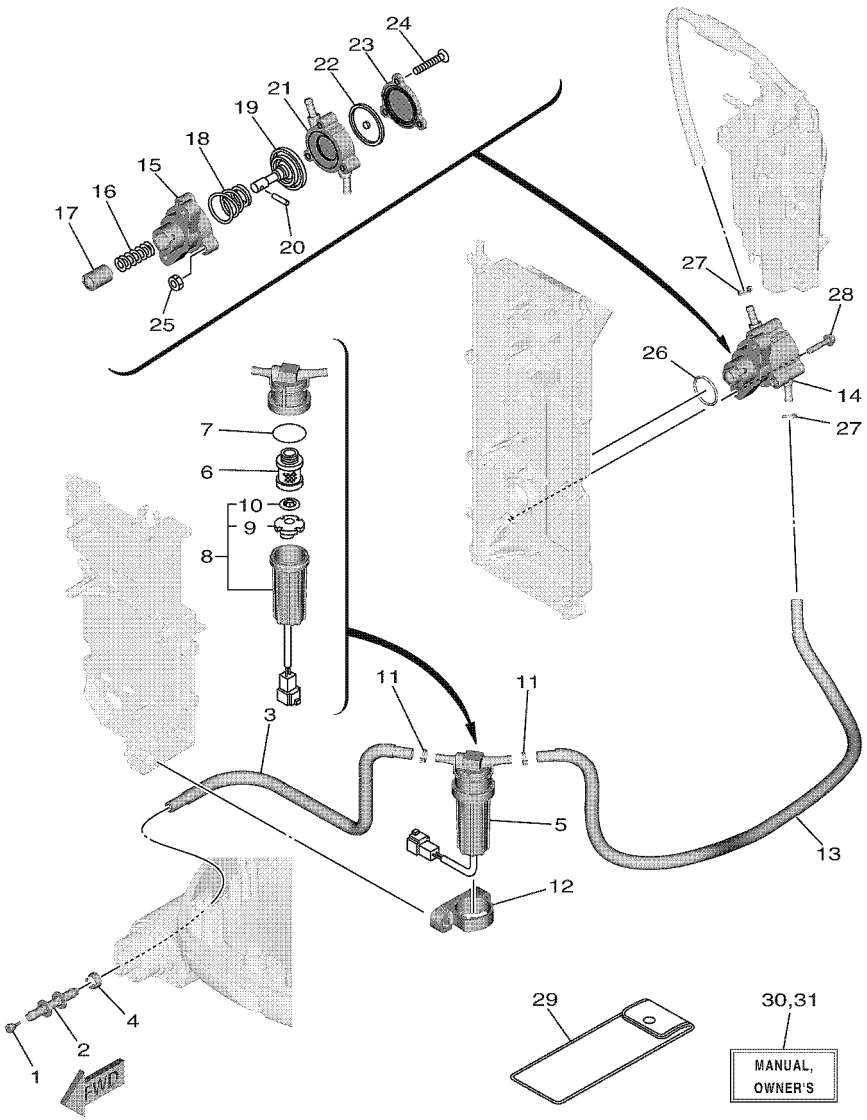

FIG. 12 FUEL — CARBURANT

REF. NO.	PART NO. N° PIECES	DESCRIPTION DESCRIPTION	6HK8					REMARKS REMARQUES
1	689–85547–01	DAMPER AMORTISSEUR	1					
2	6AW–24377–01	PIPE, JOINT 2 DURITE RACCORDEMENT 2	1					
3	6FP–24314–00	PIPE 4 DURITE 4	1					
4	6E5–24351–51	BAND 1 COLLIER 1	1					
5	6EK–24560–00	FILTER ASSY ENS FILTRE	1					
6	6D8–24563–00	.ELEMENT, FILTER .ELEMENT, FILTRE	1					
7	6D8–24564–00	.GASKET .JOINT	1					
8	6D8–24562–00	.CUP, FILTER .CUVETTE, FILTRE	1					
9	6D8–24469–00	..FLOAT, WATER LEVEL ..FLOTTEUR	1					
10	6D8–24519–00	..CLIP ..JONC	1					
11	90465–11M10	CLAMP BRIDE	2					
12	6FP–24568–01	BAND, FILTER COLLIER, FILTRE	1					
13	6FP–24311–00	PIPE, FUEL 1 DURITE A ESSENCE	1					
14	6FP–24410–00	FUEL PUMP ASSY POMPE A ESSENCE	1					
15	68V–24412–00	.BODY 1 .CORPS 1	1					
16	68V–24454–00	.SPRING .RESSORT	1					
17	68V–13131–00	.PLUNGER .PLONGEUR	1					
18	63P–24423–00	.SPRING, DIAPHRAGM .RESSORT, DIAPHRAGME	1					
19	68V–24411–00	.DIAPHRAGM .DIAPHRAGME	1					
20	68V–24374–00	.PIN .GOUPILLE	1					
21	6FP–24413–00	.BODY 2 .CORPS 2	1					
22	68V–24471–10	.DIAPHRAGM .DIAPHRAGME	1					
23	6FP–24414–00	.BODY 3 .CORPS 3	1					
24	68V–24444–00	.SCREW .VIS	3					
25	68V–24149–00	.NUT .ECROU	3					
26	93210–30682	O-RING JOINT TORIQUE	1					
27	90465–11M10	CLAMP BRIDE	2					

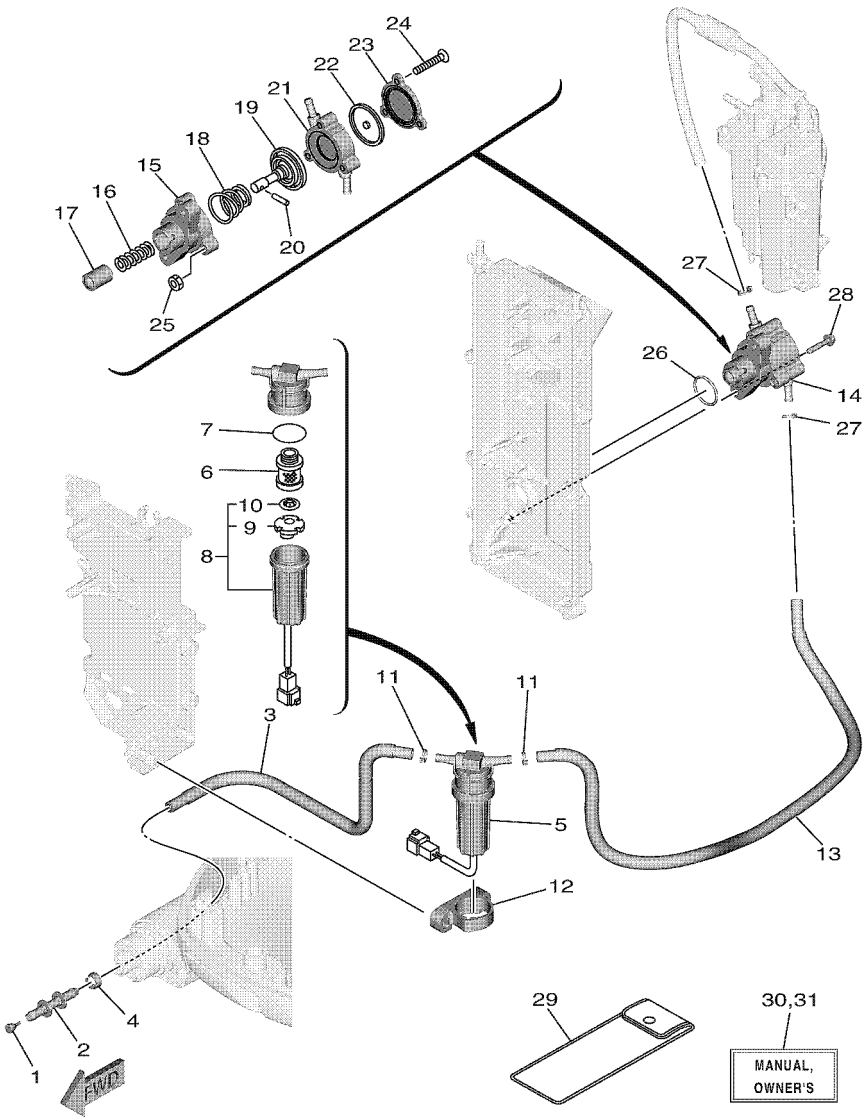

FIG. 12 FUEL — CARBURANT

REF. NO.	PART NO. N° PIECES	DESCRIPTION DESCRIPTION	6HK8					REMARKS REMARQUES
28	90105–06208	BOLT, FLANGE BOULON, A COLLERETTE	2					
29	67F–28100–03	TOOL KIT TROUSSE A OUTILS	1					AP AP
30	6HK–28199–75–E0	MANUAL,OWNER'S MANUEL D'UTILISATION	1					UR (E) UR (E)
	6HK–28199–75–F0	MANUAL,OWNER'S MANUEL D'UTILISATION	1					UR (F) UR (F)
	6HK–28199–75–S0	MANUAL,OWNER'S MANUEL D'UTILISATION	1					UR (ES) UR (ES)
	6HK–28199–75–G0	MANUAL,OWNER'S MANUEL D'UTILISATION	1					UR (D) UR (D)
	6HK–28199–75–D0	MANUAL,OWNER'S MANUEL D'UTILISATION	1					UR (NL) UR (NL)
	6HK–28199–75–H0	MANUAL,OWNER'S MANUEL D'UTILISATION	1					UR (I) UR (I)
31	6HK–28199–85–K0	MANUAL,OWNER'S MANUEL D'UTILISATION	1					UR (DK) UR (DK)
	6HK–28199–85–R0	MANUAL,OWNER'S MANUEL D'UTILISATION	1					UR (GR) UR (GR)
	6HK–28199–85–P0	MANUAL,OWNER'S MANUEL D'UTILISATION	1					UR (P) UR (P)
	6HK–28199–85–N0	MANUAL,OWNER'S MANUEL D'UTILISATION	1					UR (N) UR (N)
	6HK–28199–85–M0	MANUAL,OWNER'S MANUEL D'UTILISATION	1					UR (S) UR (S)
	6HK–28199–85–L0	MANUAL,OWNER'S MANUEL D'UTILISATION	1					UR (SF) UR (SF)

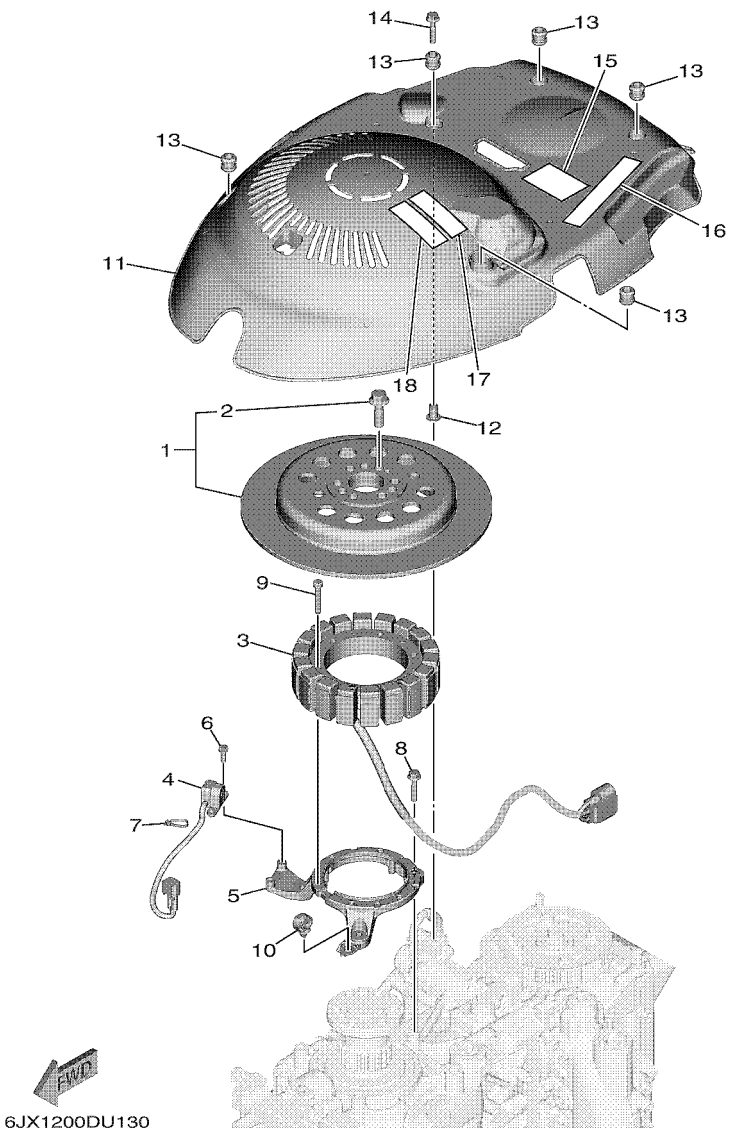

FIG. 13 GENERATOR — GENERATRICE

REF. NO.	PART NO. N° PIECES	DESCRIPTION DESCRIPTION	6HK8					REMARKS REMARQUES
1	6FP–W8145–01	ROTOR ASSY WITH BOLTS ROTOR COMPLET AVEC BOULON	1					
2	6FP–W9010–00	.BOLT SET .BOULON ENS.	1					
3	6FP–81410–10	STATOR ASSY STATOR COMPLET	1					
4	6CB–85580–00	COIL, PULSER BOBINE, PULSEUR	1					
5	6FP–85561–00	BASE, MAGNETO BASE, MAGNETO	1					
6	90109–05M89	BOLT BOULON	2					
7	90465–11M10	CLAMP BRIDE	1					
8	95D95–06030	BOLT, FLANGE DEEP RECESS BOULON FIXATION	3					
9	91312–06035	BOLT, HEXAGON SOCKET HEAD BOULON, TETE HEXAGONALE CREUSE	6					
10	90464–13249	CLAMP BRIDE	1					
11	6FP–81337–11	COVER, FLYWHEEL COUVERCLE, VOLANT	1					
12	90387–06119	COLLAR COLLERETTE	1					
13	6A0–82317–01	DAMPER, IGNITION COIL AMORTISSEUR, BOBINE D'ALLUM	5					
14	95D95–06030	BOLT, FLANGE DEEP RECESS BOULON FIXATION	1					
15	6FP–83626–01	MARK 6 MARK 6	1					
16	6EK–13437–62	MARK, CAUTION MAKER	1					
17	6EE–81994–40	LABEL, SAFETY ETIQUETTE, SECURITE	1					
18	6EE–81994–50	LABEL, SAFETY ETIQUETTE, SECURITE	1					

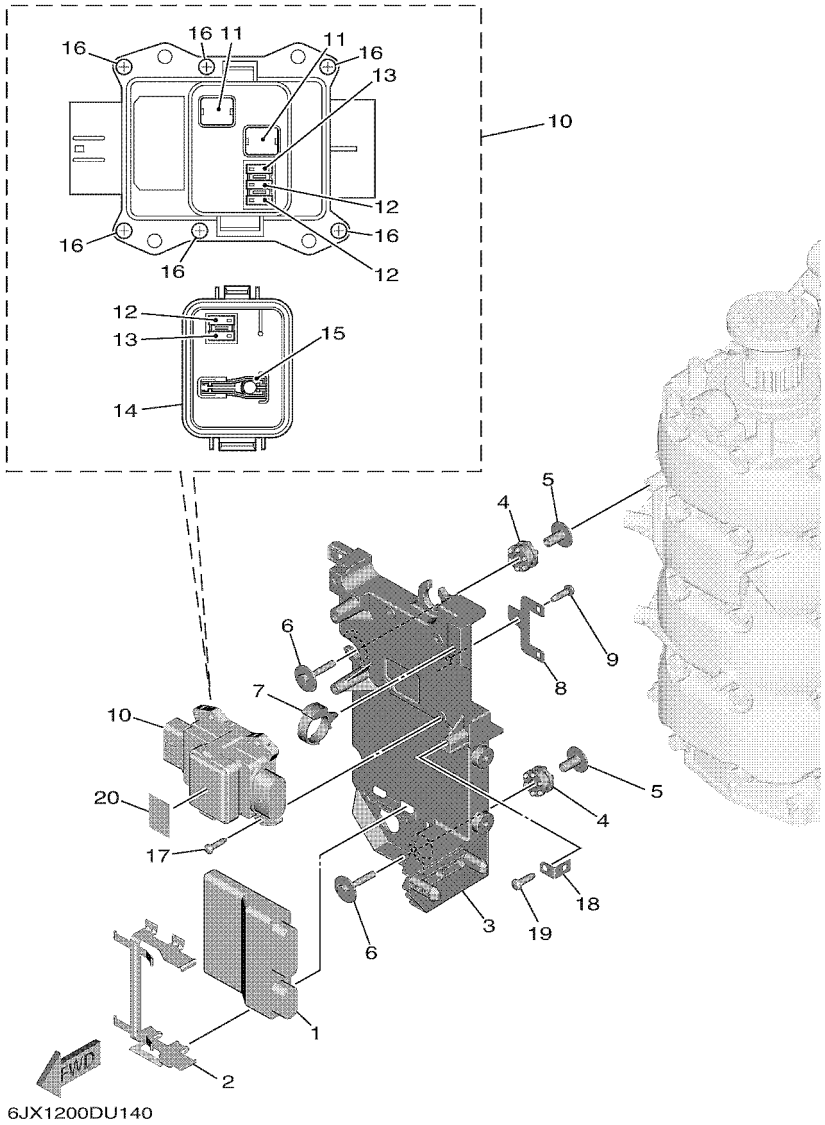

FIG. 14 ELECTRICAL 1 — PARTIE ELECTRIQUE 1

REF. NO.	PART NO. N° PIECES	DESCRIPTION DESCRIPTION	6HK8					REMARKS REMARQUES
1	6HK–8591A–02	ENGINE CONTROL UNIT ASSY BLOC DE CONTROL	1					
2	6FP–8253C–00	SPRING, PLATE LOCK RESSORT, PLAQUE BUTEE	1					
3	6FP–81948–10	BRACKET SUPPORT	1					
4	60V–85564–00	GROMMET RONDELLE CAOUTCHOUC	3					
5	90387–06176	COLLAR COLLERETTE	3					
6	68F–85119–00	BOLT BOULON	3					
7	90464–12183	CLAMP BRIDE	1					
8	6C5–8257V–00	PLATE, CONNECTOR PLAQUE, CONNECTEUR	1					
9	97780–60620	SCREW, TAPPING VIS, TETE BOMBEE	1					
10	6FP–82170–02	FUSE BOX ASSY BOITE A FUSIBLES	1					
11	6FP–82151–01	.FUSE (50A) .FUSIBLE (50A)	2					
12	6CB–82151–20	.FUSE (20A) .FUSIBLE (20A)	3					
13	6CB–82151–30	.FUSE (30A) .FUSIBLE (30A)	2					
14	6FP–85544–00	.COVER .COUVERCLE	1					
15	6CB–2812A–00	.PULLER, FUSE .TENDEUR, FUSIBLE	1					
16	6P2–82113–00	.SCREW (M3) .VIS (M3)	6					
17	97780–50620	SCREW, TAPPING VIS, TETE BOMBEE	4					
18	68V–85548–01	HOLDER SUPPORT	1					
19	97780–60620	SCREW, TAPPING VIS, TETE BOMBEE	1					
20	6FP–81919–01	GRAPHIC, REGULATOR ADHESIF, REGULATEUR	1					

FIG. 15 ELECTRICAL 2 — PARTIE ELECTRIQUE 2

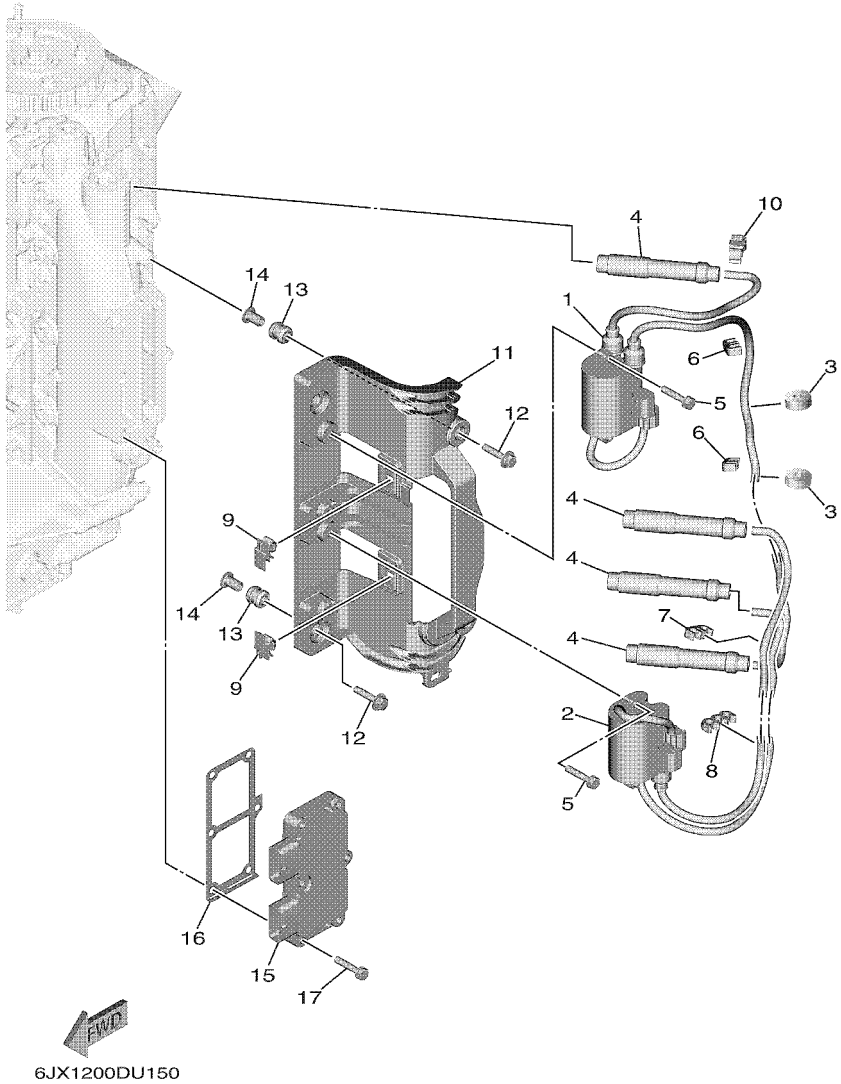

REF. NO.	PART NO. N° PIECES	DESCRIPTION DESCRIPTION	6HK8					REMARKS REMARQUES
1	6FP–82310–00	IGNITION COIL ASSY BOBINE D'ALLUMAGE	1					
2	6FP–82310–10	IGNITION COIL ASSY BOBINE D'ALLUMAGE	1					
3	90480–25161	GROMMET PASSE-FIL	2					
4	6FP–82370–00	PLUG CAP ASSY ANTIPARASITE	4					
5	97E95–06525	BOLT, HEXAGON W/W DEEP RECESS VIS HEXAGONAL AVC RONDELLE	4					
6	67F–82361–00	CLAMP, CORD COLLIER, CORDON	2					
7	67F–82361–00	CLAMP, CORD COLLIER, CORDON	1					
8	90464–07M05	CLAMP BRIDE	1					
9	90464–12002	CLAMP BRIDE	2					
10	90464–09013	CLAMP BRIDE	1					
11	6FP–82316–00	BRACKET, IGNITION COIL SUPPORT, BOBINE D'ALLUMAGE	1					
12	90119–06294	BOLT, WITH WASHER BOULON, AVEC RONDELLE	4					
13	6A0–82317–01	DAMPER, IGNITION COIL AMORTISSEUR, BOBINE D'ALLUM	4					
14	90387–06119	COLLAR COLLERETTE	4					
15	6EK–81960–10	RECTIFIER & REGULATOR ASSY REDRESSEUR REGULATEUR CPLT	1					
16	6FP–81975–00	PLATE, RECTIFIER FITTING PLAQUE, FIXATION DU REDRESSEUR	1					
17	90119–06MA4	BOLT, WITH WASHER BOULON, AVEC RONDELLE	6					

FIG. 16 ELECTRICAL 3 — PARTIE ELECTRIQUE 3

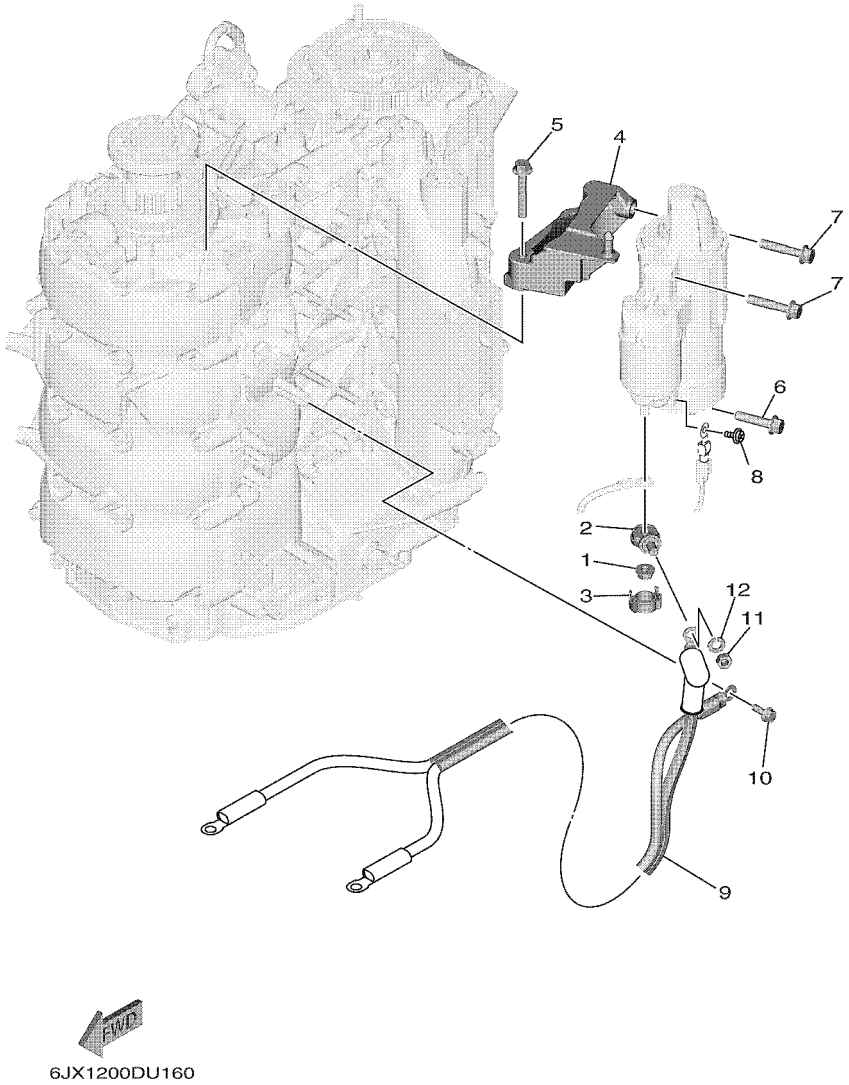

REF. NO.	PART NO. N° PIECES	DESCRIPTION DESCRIPTION	6HK8					REMARKS REMARQUES
1	90179–08003	NUT ECROU	1					
2	60V–81925–00	TERMINAL BORNE	1					
3	68F–82582–00	CAP,1 COUVERCLE 1	1					
4	6FP–81822–10	BRACKET, STARTING MOTOR SUPPORT, DEMARREUR ELECTRIQUE	1					
5	95812–08050	BOLT, FLANGE BOULON	2					
6	95817–08040	BOLT, FLANGE BOULON, A COLLERETTE	1					
7	90105–08248	BOLT, FLANGE BOULON, A COLLERETTE	2					
8	97985–04308	SCREW, WITH WASHER VIS, AVEC RONDELLE	1					
9	68V–82105–02	BATTERY CABLE CABLE DE BATTERIE	1					AP AP
10	90105–06M14	BOLT FLANGE BOULON, A COLLERETTE	1					AP AP
11	95333–08600	NUT ECROU	1					AP AP
12	92903–08100	WASHER, SPRING RONDELLE, GROWER	1					AP AP

FIG. 17 ELECTRICAL 4 — PARTIE ELECTRIQUE 4

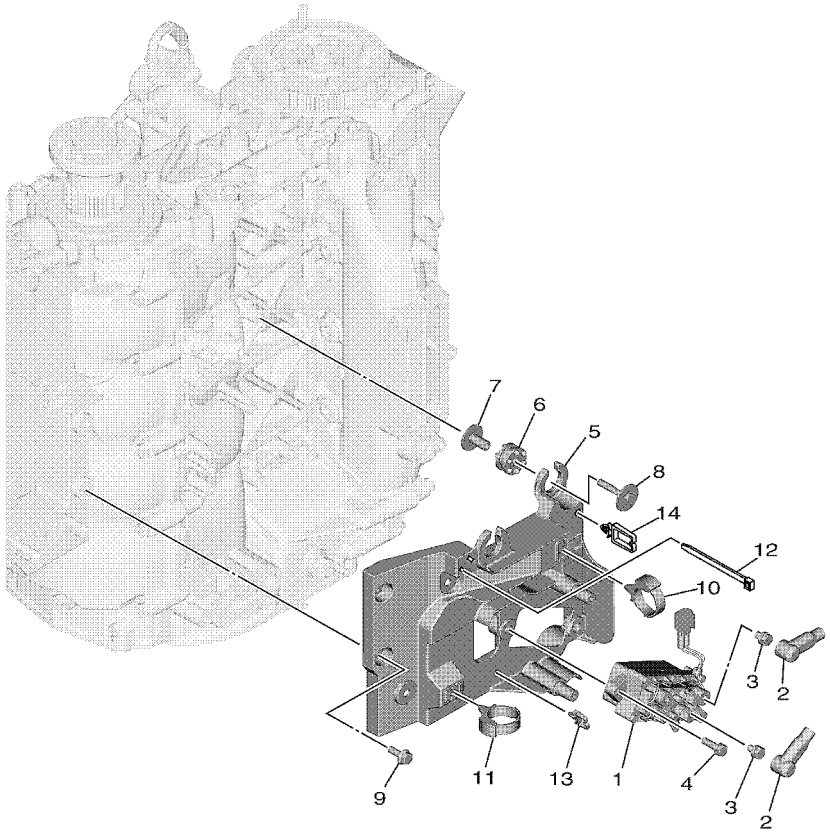

6JX1200DU170

REF. NO.	PART NO. N° PIECES	DESCRIPTION DESCRIPTION	6HK8					REMARKS REMARQUES
1	63P–81950–00	RELAY ASSY RELAIS COMPLET	1					
2	682–82119–01	COVER, LEAD WIRE GARNITURE, FIL	2					
3	97E95–06610	BOLT, HEXAGON W/W DEEP RECESS VIS HEXAGONAL AVC RONDELLE	2					
4	97E95–06520	BOLT, HEXAGON W/W DEEP RECESS VIS HEXAGONAL AVC RONDELLE	2					
5	6FP–81952–00	HOLDER, RELAY SUPPORT, RELAIS	1					
6	68F–85516–01	SPACER ENTRETOISE	3					
7	90387–06176	COLLAR COLLERETTE	3					
8	68F–85119–00	BOLT BOULON	3					
9	95D95–06016	BOLT, FLANGE DEEP RECESS BOULON FIXATION	2					
10	90464–12183	CLAMP BRIDE	1					
11	90464–12183	CLAMP BRIDE	1					
12	90465–13M11	CLAMP BRIDE	1					
13	90464–11121	CLAMP BRIDE	1					
14	90464–05141	CLAMP BRIDE	1					

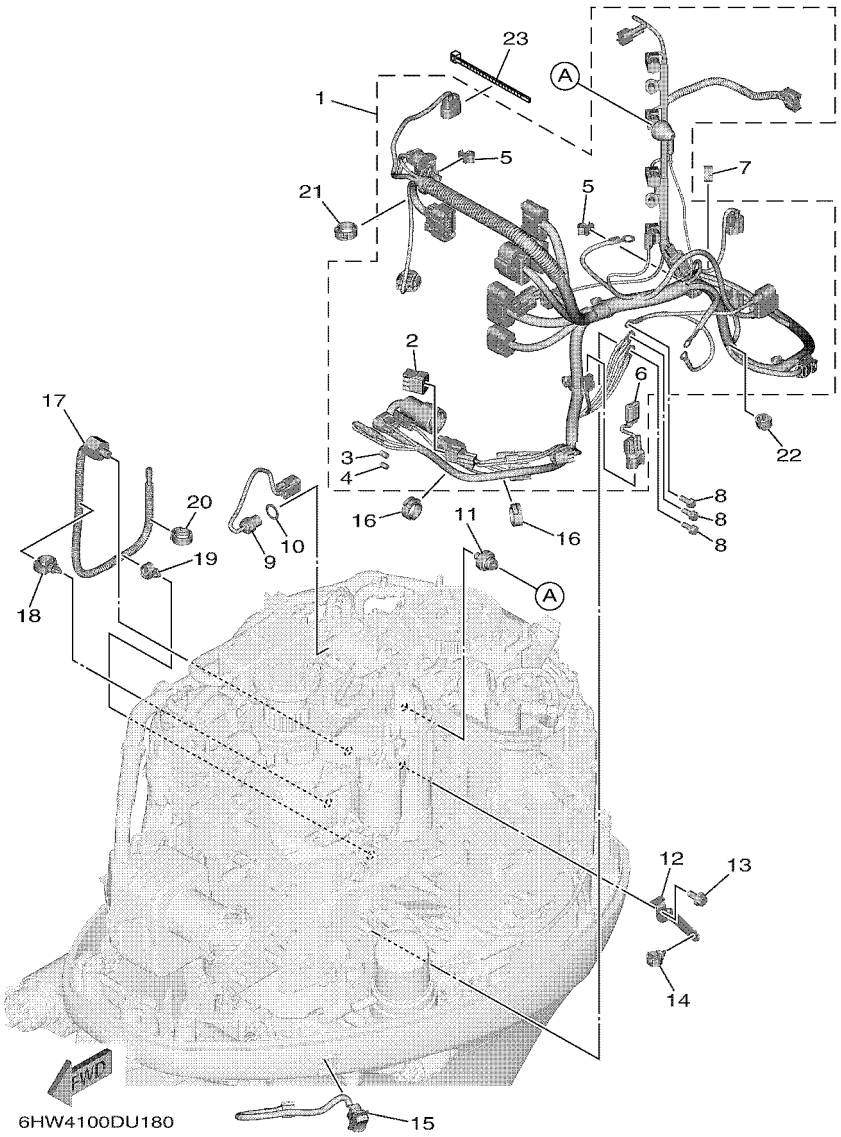

FIG. 18 ELECTRICAL 5 — PARTIE ELECTRIQUE 5

REF. NO.	PART NO. N° PIECES	DESCRIPTION DESCRIPTION	6HK8					REMARKS REMARQUES
1	6FP–82590–12	WIRE HARNESS ASSY FAISCEAU DE FILS COMPLET	1					
2	6Y8–82582–11	.CAP 1 (4PIN) .COUVERCLE 1 (4P)	1					
3	6DA–82582–00	.CAP 1 (FEMALE) .BOUCHON 1 (FEMME)	1					
4	6DA–82582–10	.CAP 1 (MALE) .BOUCHON 1 (MALE)	1					
5	90464–09M47	.CLAMP .BRIDE	2					
6	6FM–81980–01	.DIODE ASSY .REDRESSEUR 2	1					
7	90464–13227	CLAMP BRIDE	1					
8	97E95–06516	BOLT, HEXAGON W/W DEEP RECESS VIS HEXAGONAL AVC RONDELLE	3					
9	6CJ–85790–00	THERMOSENSOR ASSY SENSITOMETRE	1					
10	90430–14115	GASKET JOINT	1					
11	68V–82504–00	OIL PRESSURE SWITCH ASSY CONTACTEUR DE PRESSION D'HUILE	1					
12	6JX–85548–00	HOLDER SUPPORT	1					
13	95D95–06016	BOLT, FLANGE DEEP RECESS BOULON FIXATION	1					
14	90464–13249	CLAMP BRIDE	1					
15	6FM–82563–01	TRIM & TILT SWITCH ASSY INCLINER ET PARER COMMUTATEUR	1					
16	90464–16001	CLAMP BRIDE	2					
17	6CJ–85780–01	SENSOR, KNOCK SONDE DE COGNEMENT	1					
18	90464–20181	CLAMP BRIDE	1					
19	90464–13249	CLAMP BRIDE	1					
20	90464–16001	CLAMP BRIDE	1					
21	90464–16001	CLAMP BRIDE	1					
22	90464–13227	CLAMP BRIDE	1					
23	90465–13M97	CLAMP BRIDE	1					

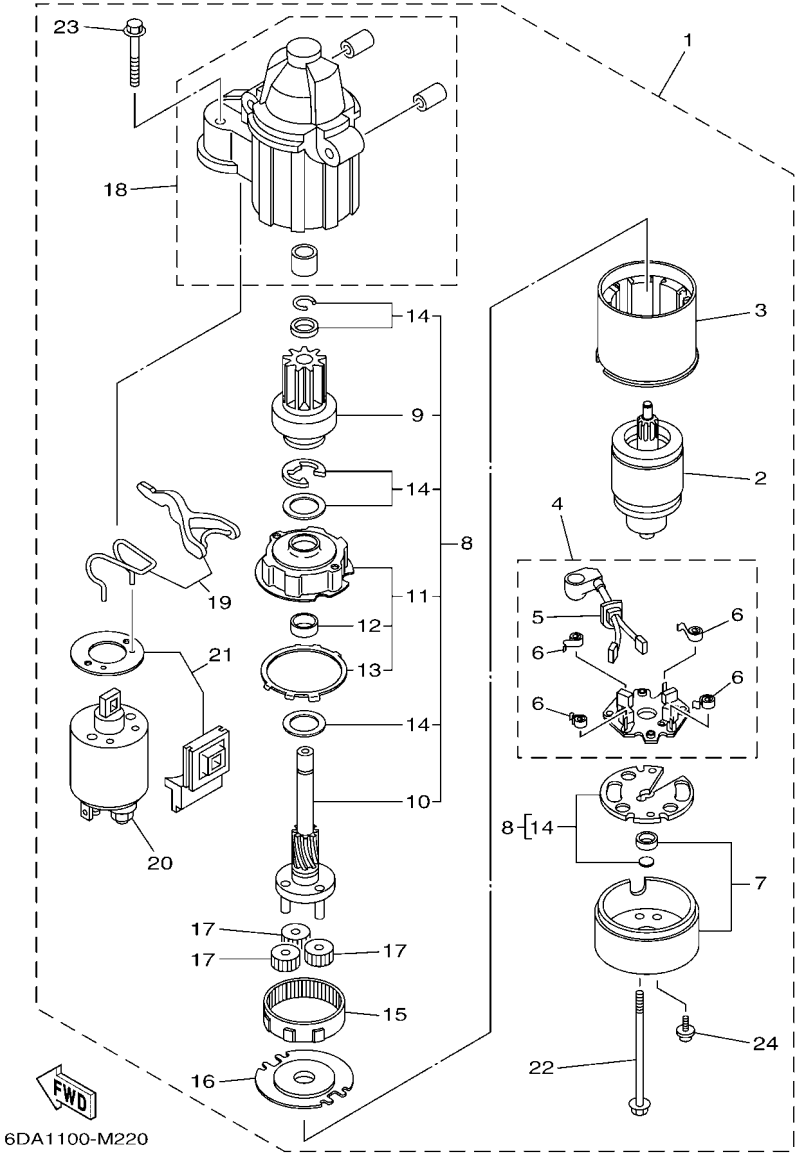

FIG. 19 STARTING MOTOR — DEMARREUR ELECTRIQUE

REF. NO.	PART NO. N° PIECES	DESCRIPTION DESCRIPTION	6HK8					REMARKS REMARQUES
1	6EM–81800–02	STARTING MOTOR ASSY DEMARREUR ELECTRIQUE COMPLET	1					
2	67F–81850–00	.ARMATURE ASSY .INDUIT	1					
3	67F–81810–00	.STATOR ASSY .STATOR COMPLET	1					
4	69J–81840–11	.BRUSH HOLDER ASSY .SUPPORT DE CHARBON	1					
5	69J–81801–11	..BRUSH SET ..JEU DE BROSSE	1					
6	67F–81813–00	..SPRING, BRUSH ..RESSORT, DE CHARBON	4					
7	6CB–81820–00	.REAR BRACKET ASSY .SUPPORT ARRIERE COMPLET	1					
8	6CB–81807–00	.GEAR ASSY, STARTING MOTOR .PIGNON, DEMARREUR ELECTRIQUE	1					
9	6CB–81832–00	..CLUTCH, OVER RUN ..EMBRAYAGE, ROUE LIBRE	1					
10	6CB–81836–00	..SHAFT, PINION ..AXE, PIGNON	1					
11	67F–81821–00	..BRACKET, CENTER 1 ..SUPPORT, CENTRE 1	1					
12	67F–81841–00	...BEARING ...ROULEMENT	1					
13	67F–8183R–00	...GASKET ...JOINT	1					
14	6CB–81809–00	..WASHER KIT ..JEU DE RONDELLES	1					
15	67F–81891–00	.GEAR, RING .ROUE DENTEE	1					WITH 67F-8183R-00 WITH 67F-8183R-00
16	67F–81830–00	.BRACKET, CENTER 2 .SUPPORT, CENTRE 2	1					
17	60V–8183T–00	.GEAR, IDLER .PIGNON, INTERMEDIAIRE	3					
18	6CB–81842–00	.COVER .COUVERCLE	1					
19	6C5–81839–00	.LEVER ASSY .LEVIER COMPLET	1					
20	6EM–81941–01	.STARTER RELAY ASSY .LANCEUR RELAIS (ENS.)	1					
21	6C5–81869–00	.COVER, DUST .COUVERCLE, POUSSIERE	1					
22	6CB–81826–00	.BOLT .BOULON	2					
23	69J–81828–00	.BOLT 2 .BOULON 2	2					
24	67F–81846–00	.SCREW .VIS	2					

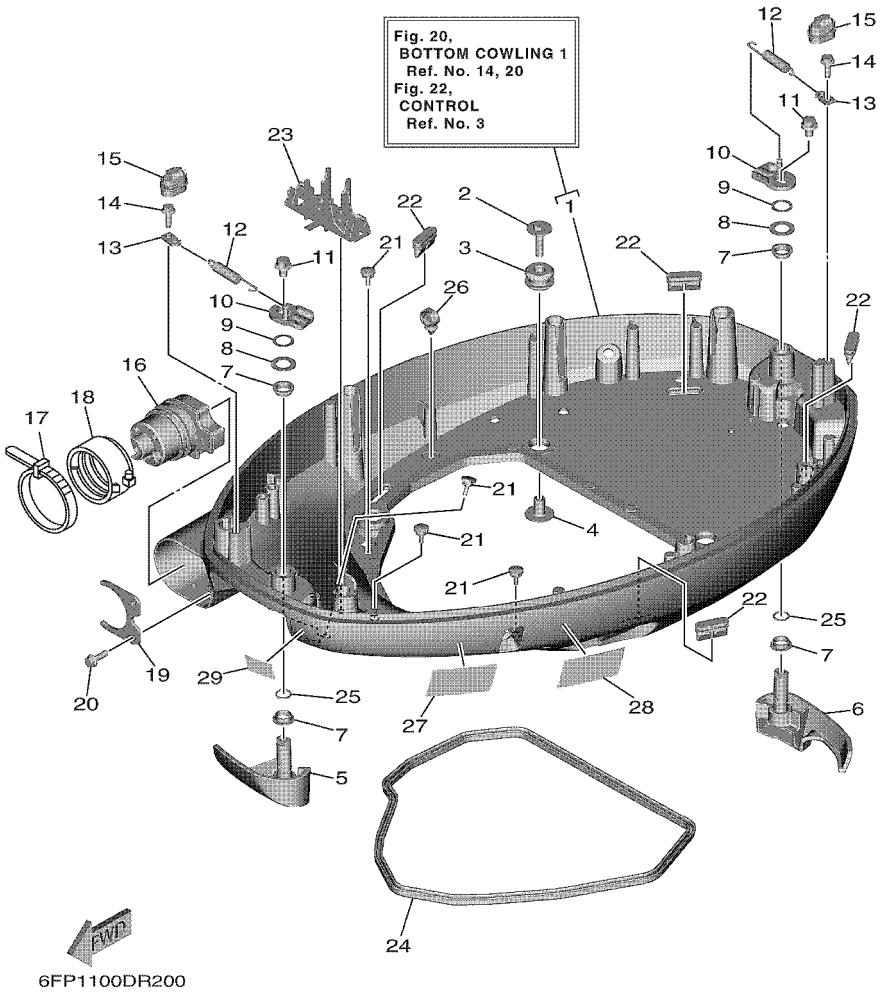

FIG. 20 BOTTOM COWLING 1 — CAPOT INFERIEUR 1

REF. NO.	PART NO. N° PIECES	DESCRIPTION DESCRIPTION	6HK8					REMARKS REMARQUES
1	6FP–42710–01–8D	BOTTOM COWLING ASSY ENS. EMBASE	1					
2	90119–08187	BOLT, WITH WASHER BOULON, AVEC RONDELLE	4					
3	90480–22M15	GROMMET PASSE-FIL	4					
4	90387–08M37	COLLAR COLLERETTE	4					
5	6FP–42815–00–8D	LEVER, CLAMP 1 LEVIER, PRESSE 1	1					
6	6FP–42816–00–8D	LEVER, CLAMP 2 LEVIER, PRESSE 2	1					
7	90386–15M73	BUSH DOUILLE	4					
8	90201–156J2	WASHER, PLATE RONDELLE, PLATE	2					
9	90206–15M18	WASHER, WAVE RONDELLE, ONDULEE	2					
10	6CB–42818–00	LEVER, CLAMP 4 LEVIER, PRESSE 4	2					
11	95D95–08012	BOLT, FLANGE DEEP RECESS BOULON FIXATION	2					
12	90506–22001	SPRING, TENSION RESSORT, TENSION	2					
13	66T–43144–00	HOOK, SPRING CROCHET	2					
14	90109–06M86	BOLT BOULON	2					
15	6EK–42728–01	CAP CAPUCHON	2					
16	6EK–42725–10	GROMMET PASSE-FIL	1					
17	90464–20258	CLAMP BRIDE	1					AP AP
18	68F–42753–00	FASTNER ATTACHE	1					AP AP
19	6CB–42761–00	STOPPER PLAQUETTE	1					
20	90109–06316	BOLT BOULON	2					
21	6H4–42748–01	GROMMET PASSE-FIL	4					
22	67F–42717–00	RUBBER, SEAL 2 JOINT EN CAOUTCHOUC 2	4					
23	68V–82594–00	CLAMP BRIDE	1					
24	6EK–42716–01	RUBBER SEAL 1 JOINT EN CAOUTCHOUC 1	1					
25	93210–13M63	O-RING JOINT TORIQUE	2					
26	90464–13249	CLAMP BRIDE	1					
27	6EE–42794–40	LABEL, WARNING (GENERAL) ETIQUETTE, AVERTISSEMENT	1					

FIG. 20 BOTTOM COWLING 1 — CAPOT INFERIEUR 1

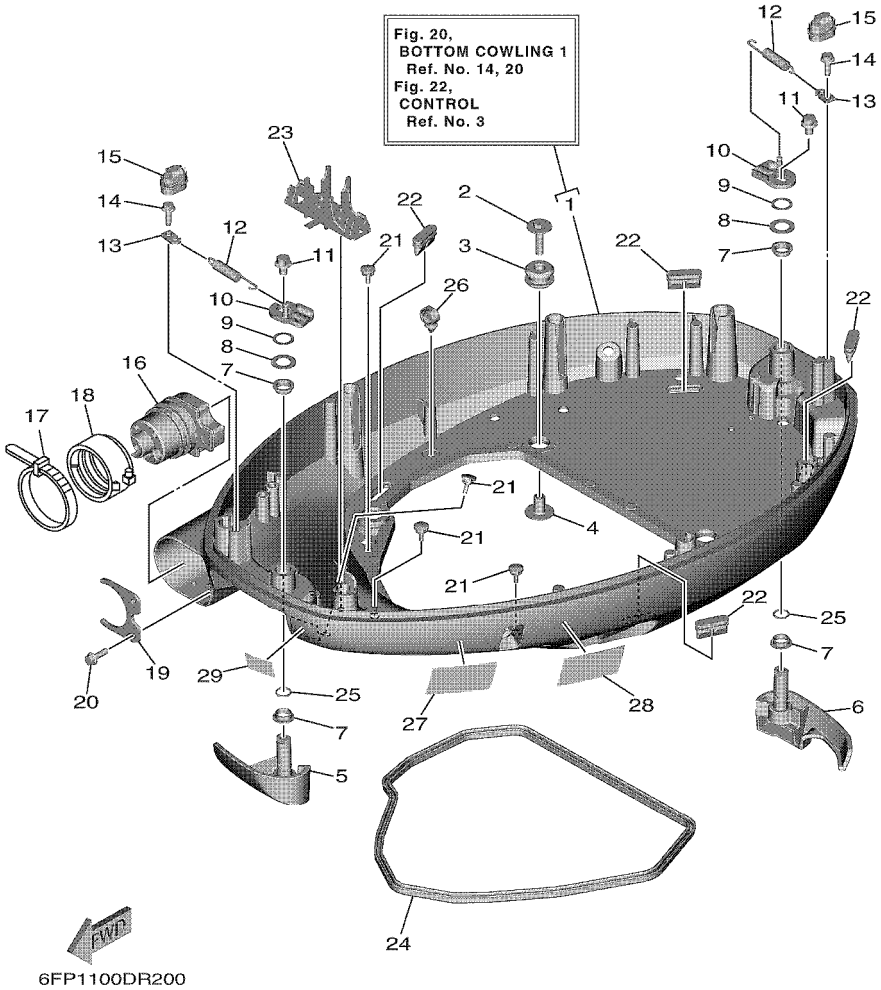

REF. NO.	PART NO. N° PIECES	DESCRIPTION DESCRIPTION	6HK8					REMARKS REMARQUES
28	6EE–42794–50	LABEL, WARNING (GENERAL) ETIQUETTE, AVERTISSEMENT	1					
29	6AH–81996–00	MARK MARQUE	1					

FIG. 21 BOTTOM COWLING 2 — CAPOT INFERIEUR 2

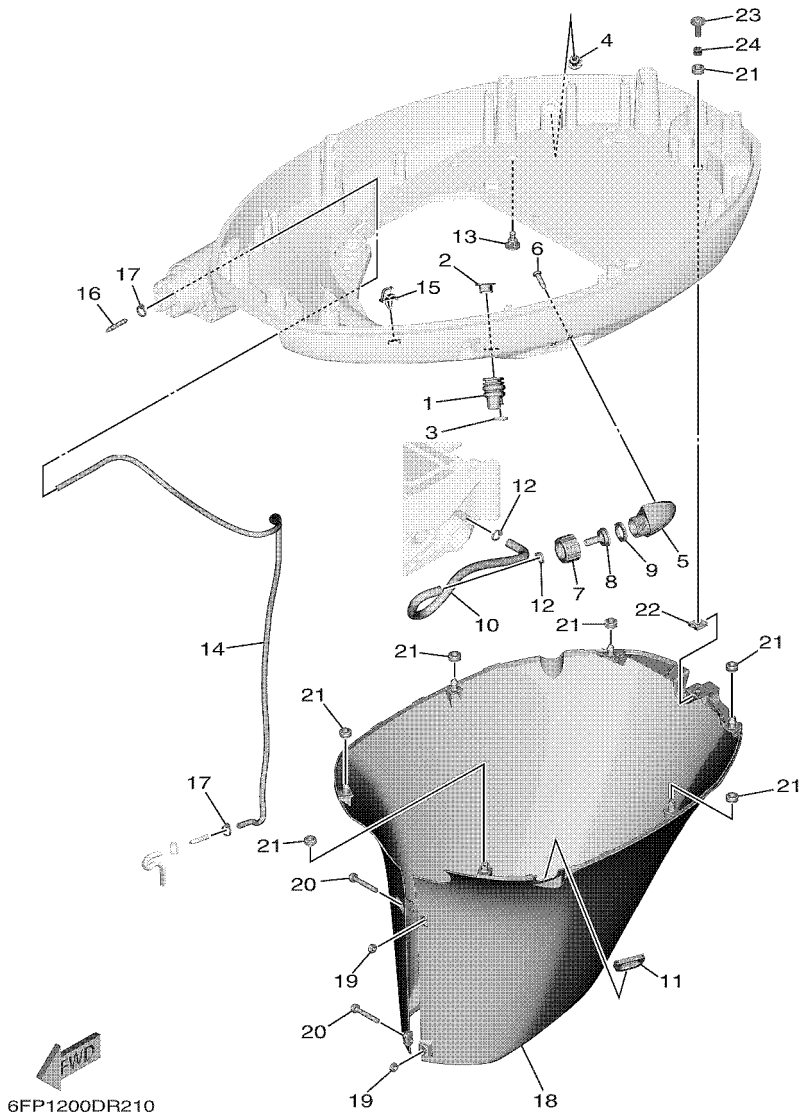

REF. NO.	PART NO. N° PIECES	DESCRIPTION DESCRIPTION	6HK8					REMARKS REMARQUES
1	6H1–42726–31	GROMMET PASSE-FIL	1					
2	6BG–42384–00	SEAL, CAP JOINT, CAPUCHON	1					
3	90465–11M10	CLAMP BRIDE	1					
4	6P2–44391–00	NIPPLE, HOSE RACCORD D'ESSENCE	1					
5	6AW–12572–00	ADAPTER ADAPTATEUR	1					
6	97780–60520	SCREW, TAPPING VIS, TETE BOMBEE	2					
7	6R3–12581–00	JOINT, HOSE 1 JOINT DE TUYAU	1					
8	6R3–12582–00	JOINT, HOSE 2 RACCORD DE TUYAU 1	1					
9	6R3–12583–00	GASKET, HOSE JOINT JOINT	1					
10	6EK–42541–00	PIPE 1 TUYAU 1	1					
11	6AH–42726–01	GROMMET PASSE-FIL	1					
12	90465–11M10	CLAMP BRIDE	2					
13	6P2–44391–00	NIPPLE, HOSE RACCORD D'ESSENCE	1					
14	90445–073F9	HOSE (L1200) DURITE (L1200)	1					
15	90464–07259	CLAMP BRIDE	1					
16	6E5–83558–00	END, NIPPLE RACCORD DE NIPPLE	1					
17	90465–11M10	CLAMP BRIDE	2					
18	6FP–42741–00–8D	APRON CAPOT LATERAL	1					
19	95380–06600	NUT, HEXAGON ECROU	2					
20	90159–06M28	SCREW, WITH WASHER VIS, AVEC RONDELLE	2					
21	90480–13M24	GROMMET PASSE-FIL	7					
22	90183–061A8	NUT, SPRING ECROU, RESSORT	1					
23	90159–06053	SCREW, WITH WASHER VIS, AVEC RONDELLE	1					
24	90387–06M43	COLLAR COLLERETTE	1					

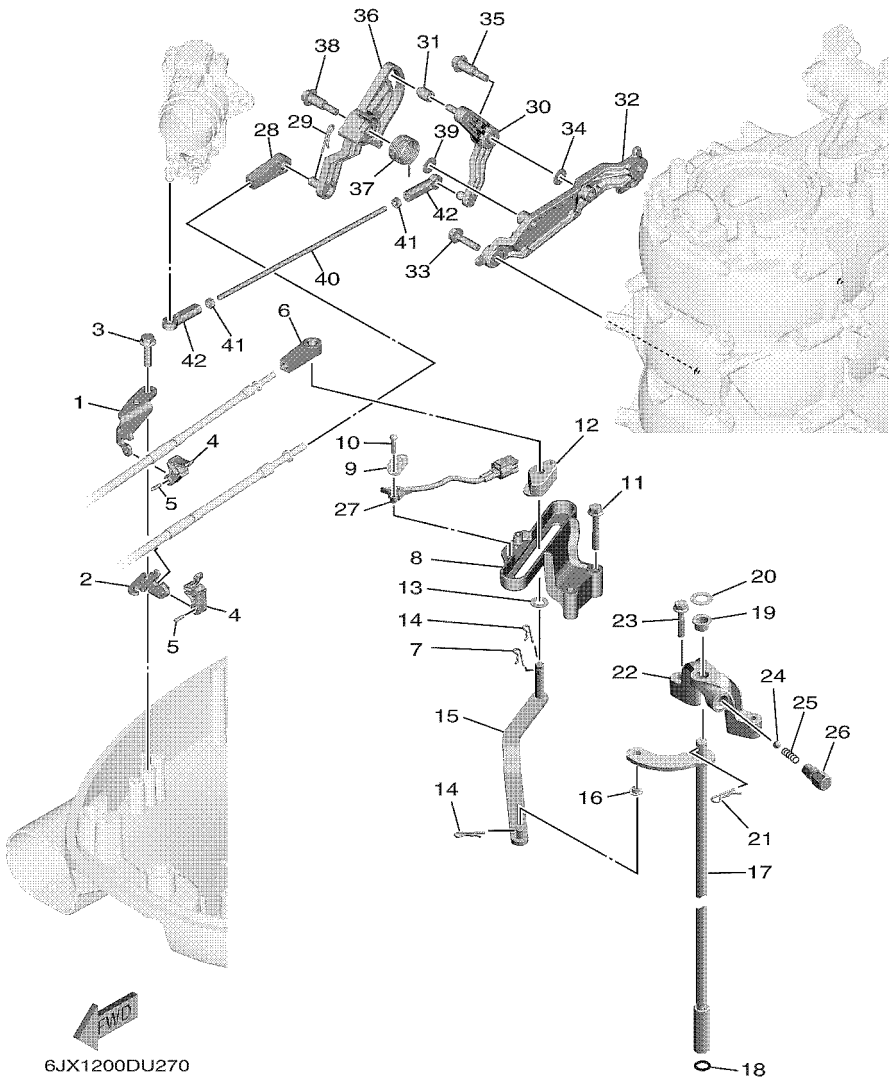

FIG. 22 CONTROL — COMMANDE

REF. NO.	PART NO. N° PIECES	DESCRIPTION DESCRIPTION	6HK8					REMARKS REMARQUES
1	6EK–48531–01	BRACKET, REMOTE CONTROL 1 ETRIER 1, COMMANDE A DISTANCE	1					
2	6FP–48532–00	BRACKET, REMOTE CONTROL 2 ETRIER 2, COMMANDE A DISTANCE	1					
3	90109–06M81	BOLT BOULON	2					
4	6EK–48538–00	CLAMP, CABLE 1 COLLIER	2					
5	91690–30010	PIN, SPRING AGRAFFE	2					
6	6E5–48344–00	CABLE END, REMOTE CONTROL CHAPE CABLE	1					
7	90468–18008	CLIP JONC	1					
8	6EK–44117–01	BRACKET SUPPORT	1					
9	61A–82588–01	PLATE PLAQUE	1					
10	97985–04116	SCREW, WITH WASHER VIS, AVEC RONDELLE	2					
11	95D75–06040	BOLT, FLANGE DEEP RECESS BOULON FIXATION	2					
12	63P–44122–00	BUSHING, SHIFT ROD LEVER DOUILLE, LEVIER D'EMBRAYAGE	1					
13	90202–08M20	WASHER, PLATE RONDELLE, PLATE	1					
14	90468–18008	CLIP JONC	2					
15	6EK–44121–00	LEVER, SHIFT ROD LEVIER, TIGE D'INVERSION	1					
16	90386–06M12	BUSH DOUILLE	1					
17	6EK–44120–01	HANDLE GEAR SHIFT ASSY LEVIER D'EMBRAYAGE	1					L(20.3") L(20.3")
	6EK–44120–11	HANDLE GEAR SHIFT ASSY LEVIER D'EMBRAYAGE	1					X(25.3") X(25.3")
18	93210–09165	O-RING JOINT TORIQUE	1					
19	90386–10001	BUSH DOUILLE	1					
20	90201–11008	WASHER, PLATE RONDELLE, PLATE	1					
21	90468–180A0	CLIP JONC	1					
22	6EK–44118–00	BRACKET SUPPORT	1					
23	95D95–06030	BOLT, FLANGE DEEP RECESS BOULON FIXATION	2					
24	93501–04M02	BALL BILLE	1					
25	90501–12082	SPRING, COMPRESSION RESSORT, COMPRESSION	1					
26	648–42715–00	BUSHING 2 COUSSINET 2	1					

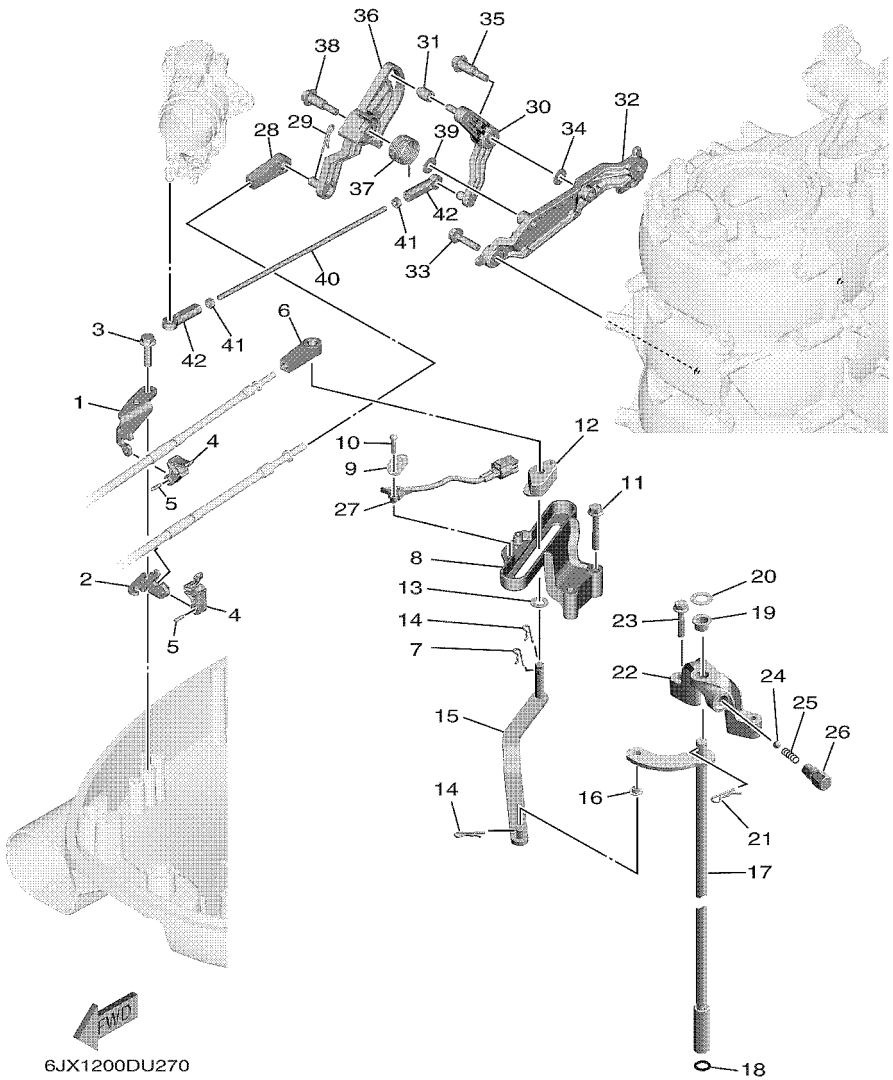

FIG. 22 CONTROL — COMMANDE

REF. NO.	PART NO. N° PIECES	DESCRIPTION DESCRIPTION	6HK8					REMARKS REMARQUES
27	60V–8259F–01	SWITCH ASSY COMMUTATEUR	1					
28	6E5–48344–00	CABLE END, REMOTE CONTROL CHAPE CABLE	1					
29	90468–18008	CLIP JONC	1					
30	6FP–42154–00	LEVER, THROTTLE CONTROL LEVIER DE COMMANDE D'AVANCE	1					
31	68V–42171–00	BUSHING COUSSINET	1					
32	6FP–41662–00	BRACKET 2 SUPPORT 2	1					
33	95D95–06025	BOLT, FLANGE DEEP RECESS BOULON FIXATION	2					
34	90201–06M05	WASHER, PLATE RONDELLE, PLATE	1					
35	90109–06288	BOLT BOULON	1					
36	6FP–41213–00	CAM, ACCEL. CAME, ACCELERATION	1					
37	6EK–44135–00	SPRING RESSORT	1					
38	90109–06288	BOLT BOULON	1					
39	90201–06M05	WASHER, PLATE RONDELLE, PLATE	1					
40	6FP–41211–00	LINK, ACCEL. BIELLETTE, ACCELERATION	1					
41	95380–05600	NUT ECROU	2					
42	682–41237–00	JOINT, LINK RACCORD	2					

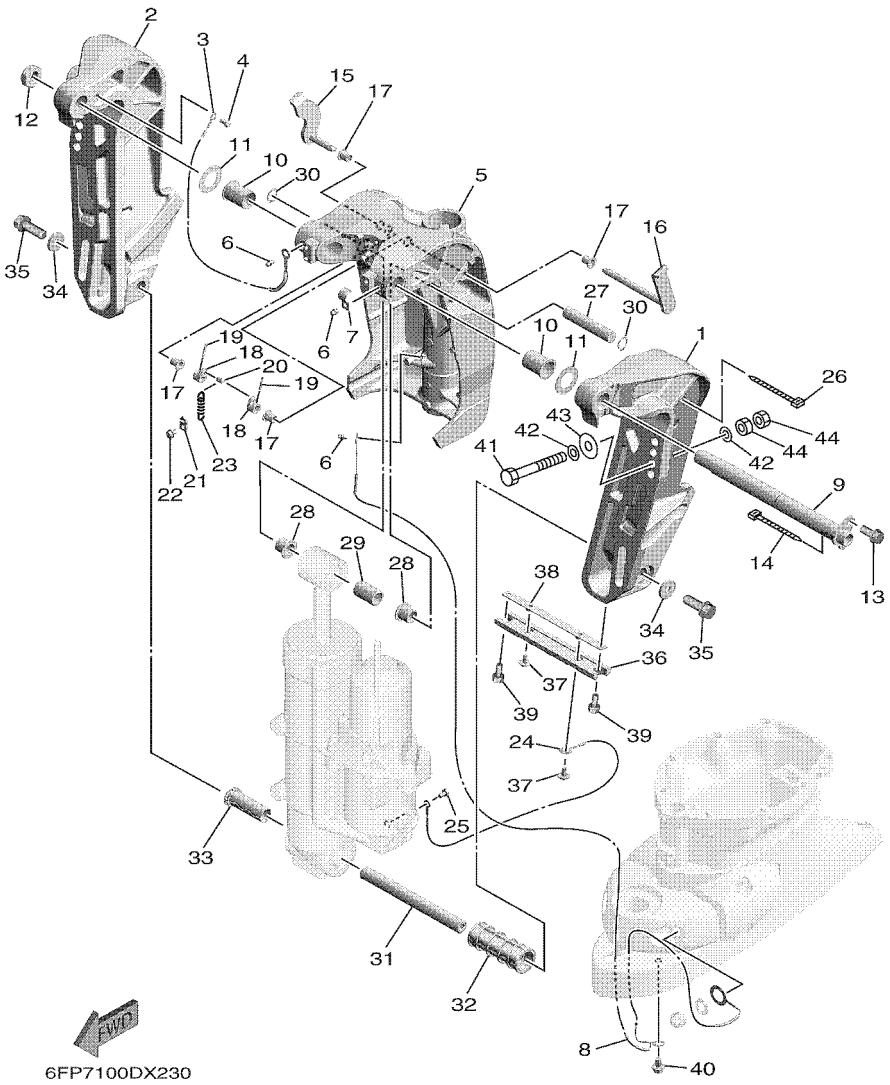

FIG. 23 BRACKET 1 SUPPORT 1

REF. NO.	PART NO. N° PIECES	DESCRIPTION DESCRIPTION	6HK8					REMARKS REMARQUES
1	6EK–43111–00–8D	BRACKET, CLAMP 1 PRESSE 1	1					
2	6EK–43112–00–8D	BRACKET, CLAMP 2 PRESSE 2	1					
3	6E5–82148–00	WIRE, LEAD 4 FIL 4	1					
4	97885–06008	SCREW, PAN HEAD VIS, A ENCOCHE	1					
5	6EK–43311–00–8D	BRACKET, SWIVEL 1 SUPPORT, PIVOT 1	1					L(20.3") L(20.3")
	6EK–43311–10–8D	BRACKET, SWIVEL 1 SUPPORT, PIVOT 1	1					X(25.3") X(25.3")
6	93700–06002	NIPPLE, GREASE PION	3					
7	90465–08M63	CLAMP BRIDE	1					
8	66K–82149–00	WIRE, LEAD 3 FIL 3	1					L(20.3") L(20.3")
	68V–82149–30	WIRE, LEAD 3 FIL 3	1					X(25.3") X(25.3")
9	64E–43131–30	BOLT, CLAMP BRACKET BOULON, PRESSE	1					
10	90386–25M31	BUSH DOUILLE	2					
11	90201–26M59	WASHER, PLATE RONDELLE, PLATE	2					
12	90185–22M11	NUT, SELF-LOCKING ECROU,AUTO-BLOQUANT	1					
13	97E95–08520	BOLT, HEXAGON W/W DEEP RECESS VIS HEXAGONAL AVC RONDELLE	1					
14	90465–11M10	CLAMP BRIDE	1					
15	6EK–43181–00	LEVER, TILT STOP 1 LEVIER VERROUILLAGE RELEVAGE 1	1					
16	6EK–43185–00	LEVER, TILT STOP 2 LEVIER VERROUILLAGE RELEVAGE 2	1					
17	90386–10M16	BUSH DOUILLE	4					
18	6G5–43148–00	COLLAR, DISTANCE ENTRETOISE	2					
19	91690–30020	PIN, SPRING AGRAFFE	2					
20	90249–06M19	PIN GOUPILLE	1					
21	66T–43144–00	HOOK, SPRING CROCHET	1					
22	97E95–06512	BOLT, HEXAGON W/W DEEP RECESS VIS HEXAGONAL AVC RONDELLE	1					
23	90506–14M24	SPRING, TENSION RESSORT, TENSION	1					
24	6D8–82148–00	WIRE, LEAD 4 FIL 4	1					
25	97E95–06510	BOLT, HEXAGON W/W DEEP RECESS VIS HEXAGONAL AVC RONDELLE	1					

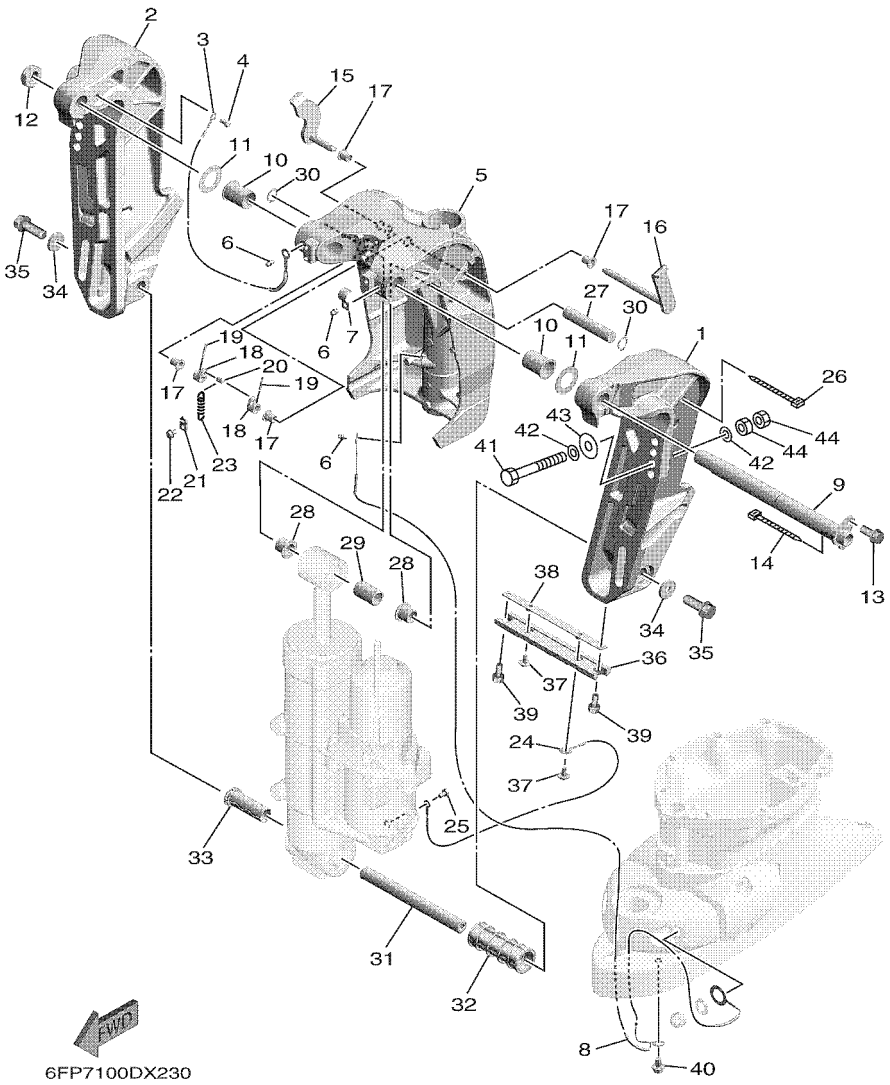

FIG. 23 BRACKET 1 — SUPPORT 1

REF. NO.	PART NO. N° PIECES	DESCRIPTION DESCRIPTION	6HK8					REMARKS REMARQUES
26	90465–13M18	CLAMP BRIDE	1					
27	6EK–43126–00	PIN, UPPER SHOCK MOUNT AXE, SUPERIEUR AMORTISSEUR	1					
28	90386–18M35	BUSH DOUILLE	2					
29	90386–18001	BUSH DOUILLE	1					
30	93410–18M05	CIRCLIP CIRCLIP	2					
31	6EK–43818–00	PIN, LOWER SHOCK MOUNT AXE, INFERIEUR AMORTISSEUR	1					
32	6H1–43834–10	PIPE TUYAU	1					
33	90383–20001	BUSH, FORMED DOUILLE, MISE EN FORME	1					
34	90201–10060	WASHER, PLATE RONDELLE, PLATE	2					
35	90119–10054	BOLT, WITH WASHER BOULON, AVEC RONDELLE	2					
36	6H1–45251–03	ANODE ANODE	1					
37	90119–06276	BOLT, WITH WASHER BOULON, AVEC RONDELLE	2					
38	6EK–44536–00	PLATE 2 PLAQUETTE 2	1					
39	97E95–06616	BOLT, HEXAGON W/W DEEP RECESS VIS HEXAGONAL AVC RONDELLE	2					
40	95D95–06010	BOLT, FLANGE DEEP RECESS BOULON FIXATION	1					
41	90101–12065	BOLT (L:130MM) BOULON (L:130MM)	4					
42	90201–13M01	WASHER, PLATE RONDELLE, PLATE	8					
43	90201–12426	WASHER, PLATE RONDELLE, PLATE	4					
44	95380–12600	NUT ECROU	8					

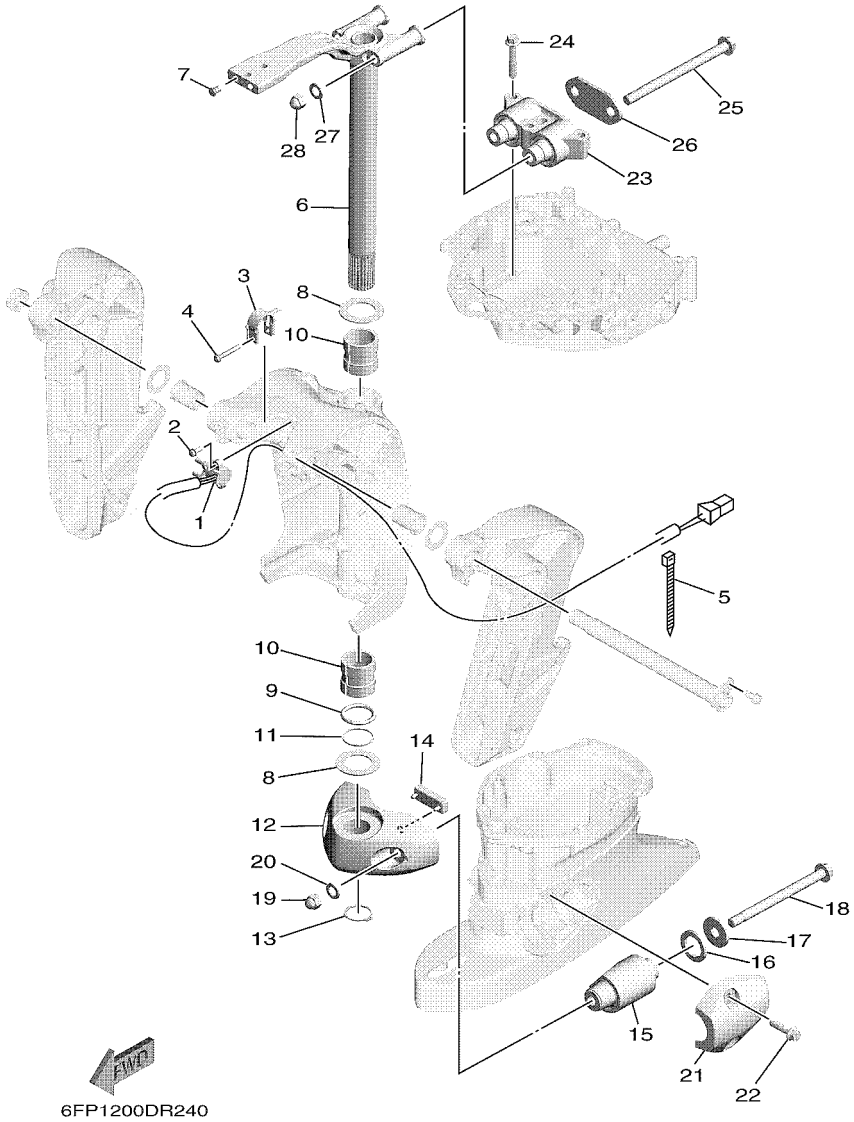

FIG. 24 BRACKET 2 — SUPPORT 2

REF. NO.	PART NO. N° PIECES	DESCRIPTION DESCRIPTION	6HK8					REMARKS REMARQUES
1	67H–83672–02	TRIM SENDER INCLINER RACCORD	1					
2	97985–06216	SCREW, WITH WASHER VIS, AVEC RONDELLE	2					
3	64E–43139–11	CAM, TRIM SENDER VILEBREQUIN TRUM	1					
4	90159–05059	SCREW, WITH WASHER VIS, AVEC RONDELLE	1					
5	90465–11M10	CLAMP BRIDE	2					
6	6EK–42510–00–8D	STEERING BRACKET ASSY DIRECTION SUPPORT (ENS.)	1					L(20.3") L(20.3")
	6EK–42510–10–8D	STEERING BRACKET ASSY DIRECTION SUPPORT (ENS.)	1					X(25.3") X(25.3")
7	90338–08174	PLUG PLOT	2					
8	90201–38M60	WASHER, PLATE RONDELLE, PLATE	2					
9	93210–37MH7	O-RING JOINT TORIQUE	1					
10	90386–38M32	BUSH DOUILLE	2					
11	90202–40M47	WASHER, PLATE RONDELLE, PLATE	1					
12	6EK–44551–00–8D	HOUSING, LOWER MOUNT RUBBER 1 BOITIER, SILENT-BLOC INFERIEUR	1					
13	93410–37M04	CIRCLIP CIRCLIP	1					
14	61A–44575–01	DAMPER, LOWER MOUNT RUBBER SILENT-BLOC, INFERIEUR	1					
15	63P–44555–00	MOUNT DAMPER, LOWER SIDE SILENT-BLOC, INFERIEUR LATERAL	2					
16	90202–32M19	WASHER, PLATE RONDELLE, PLATE	2					
17	90201–16M55	WASHER, PLATE RONDELLE, PLATE	2					
18	90105–14013	BOLT, FLANGE BOULON, A COLLERETTE	2					
19	90176–14002	NUT, CAP ECROU, BOUCHON	2					
20	92995–14600	WASHER RONDELLE	2					
21	6EK–44553–00–8D	COVER, LOWER MOUNT COUVERCLE, SUSPENSION INFERIEU	2					
22	90119–10058	BOLT, WITH WASHER BOULON, AVEC RONDELLE	4					
23	6FP–44514–00	MOUNT DAMPER, UPPER SIDE SILENT-BLOC, SUPERIEUR LATERAL	1					
24	95D75–10060	BOLT, FLANGE DEEP RECESS BOULON FIXATION	3					
25	90105–14007	BOLT, FLANGE BOULON, A COLLERETTE	2					
26	6EK–44526–00	PLATE PLAQUE	1					

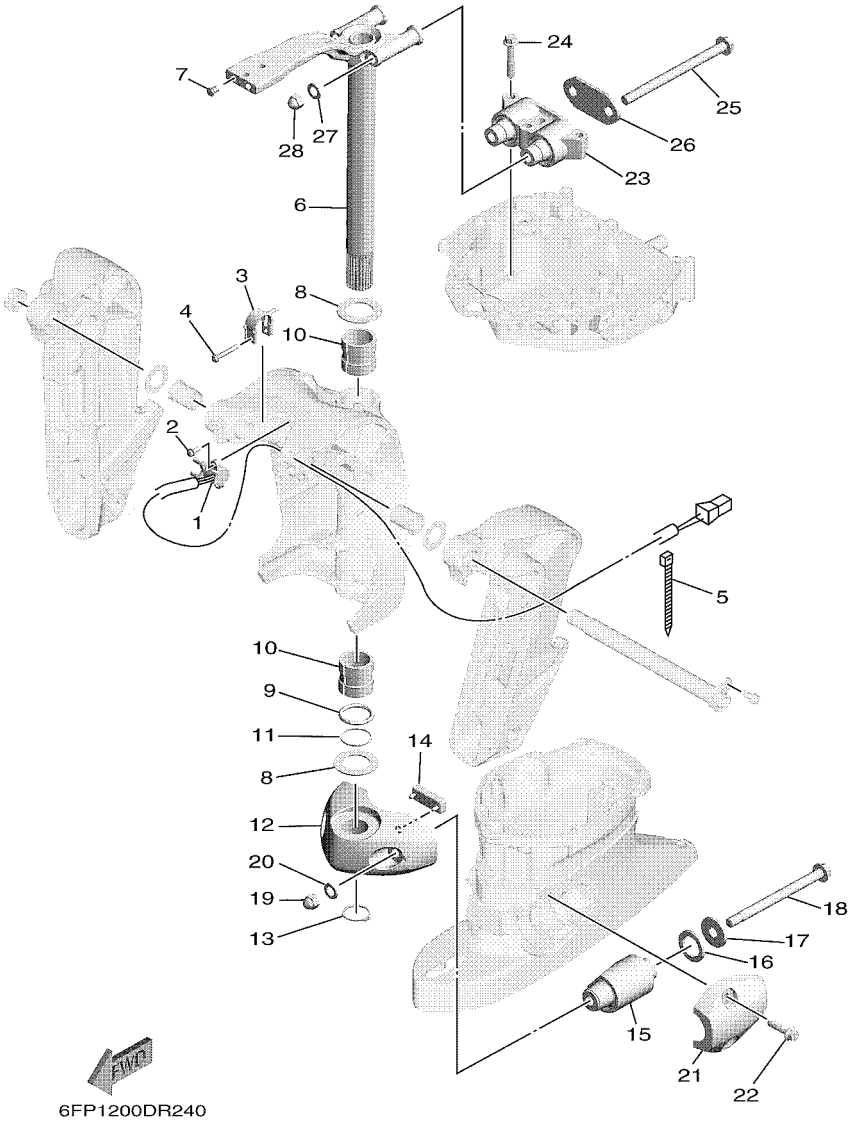

FIG. 24 BRACKET 2 — SUPPORT 2

REF. NO.	PART NO. N° PIECES	DESCRIPTION DESCRIPTION	6HK8					REMARKS REMARQUES
27	92995–14600	WASHER RONDELLE	2					
28	90176–14002	NUT, CAP ECROU, BOUCHON	2					

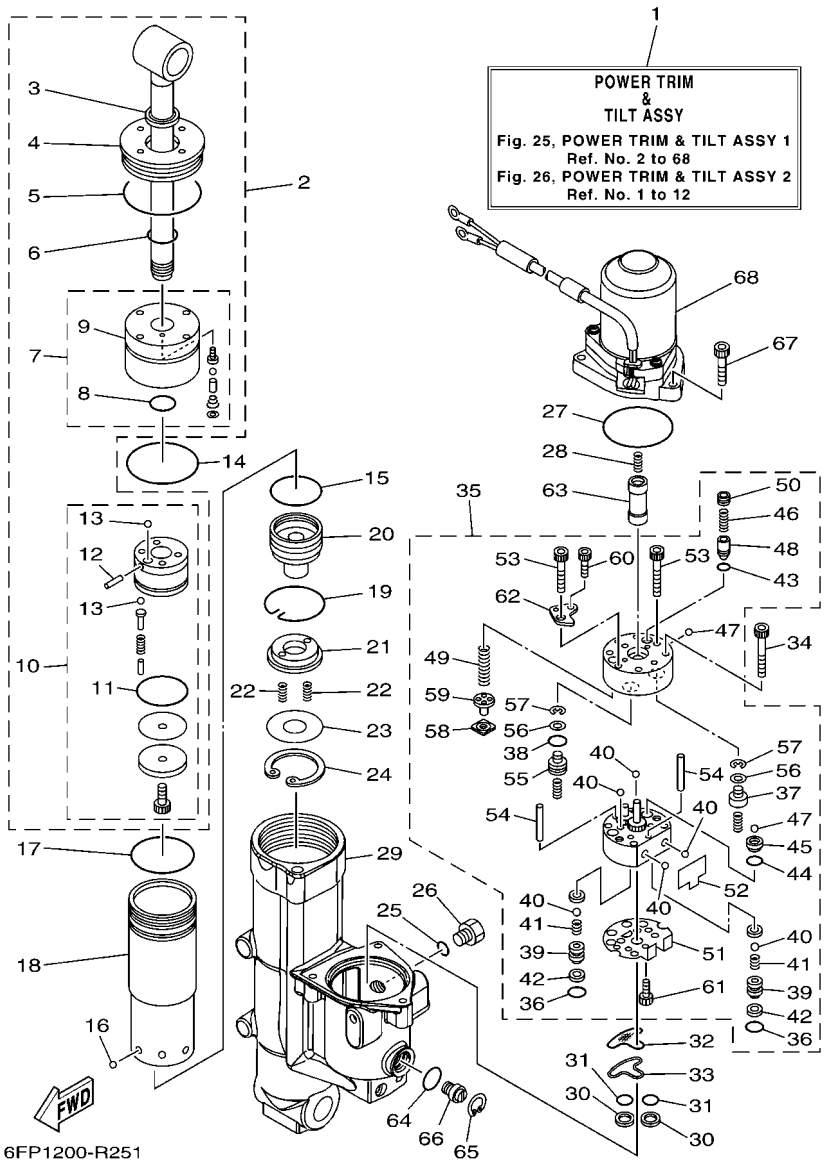

FIG. 25 POWER TRIM & TILT ASSY 1 — PUISSANCE PARER ET INCLINER 1

REF. NO.	PART NO. N° PIECES	DESCRIPTION DESCRIPTION	6HK8					REMARKS REMARQUES
1	6FP–43800–02	POWER TRIM & TILT ASSY PUISSANCE PARER ET INCLINER (E	1					L(20.3") L(20.3")
	6EK–43800–04	POWER TRIM & TILT ASSY PUISSANCE PARER ET INCLINER (E	1					X(25.3") X(25.3")
2	6EK–43810–00	TILT PISTON SUB ASSY INCLINER PISTON AUXILIAIRE(ENS	1					
3	6H1–43812–00	.SEAL, DUST .JOINT	1					
4	6EK–43821–00	.SCREW, TRIM CYLINDER END .VIS	1					
5	6EK–43861–00	.O-RING .JOINT TORIQUE	1					
6	6D8–43861–00	.O-RING .JOINT TORIQUE	1					
7	6EK–4380R–00	.CYLINDER END SUB ASSY .CYLINDRE RACCORD (ENS.)	1					
8	6D8–43861–00	..O-RING ..JOINT TORIQUE	1					
9	6EK–43811–00	..SCREW, CYLINDER END ..VIS, CYLINDRE RACCORD	1					
10	6EK–4380P–00	.PISTON SUB ASSY .PISTON AUXILIAIRE (ENS.)	1					
11	6H1–43862–00	..O-RING ..JOINT TORIQUE	1					
12	91609–16012	..PIN, SPRING ..AXE DE RESSORT	1					
13	93505–32038	..BALL ..BILLE	5					
14	67F–43865–00	O-RING JOINT TORIQUE	1					
15	6H1–43862–00	O-RING JOINT TORIQUE	1					
16	93503–16003	BALL BILLES	6					
17	7BB–G3861–00	O-RING JOINT TORIQUE	1					
18	6EK–22471–01	CYLINDER, SHOCK ABSORBER CYLINDRE, AMORTISSEUR	1					
19	6EK–43875–00	RING, SNAP RESSORT	1					
20	6EK–4381B–00	FREE PISTON SUB ASSY PISTON AUXILIAIRE (ENS.)	1					
21	6EK–43899–00	PLATE STOPPER PLAQUETTE	1					
22	62X–4384H–00	SPRING RESSORT	2					
23	6EK–22434–00	PLATE, VALVE 1 PLATEAU, SOUPAPE 1	1					
24	99009–47500	CIRCLIP CIRCLIP	1					
25	93210–09165	O-RING JOINT TORIQUE	1					
26	6EK–43829–00	PLUG, RESERVOIR BOUCHON	1					

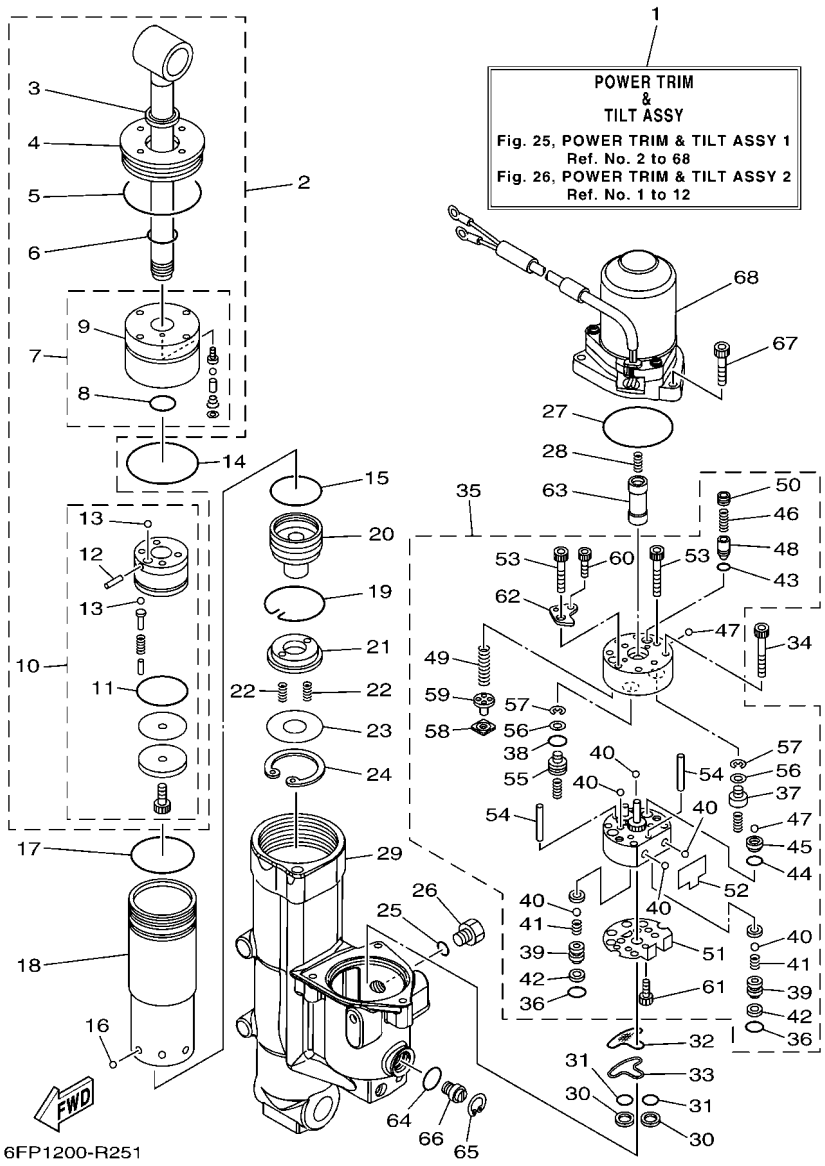

FIG. 25 POWER TRIM & TILT ASSY 1 — PUISSANCE PARER ET INCLINER 1

REF. NO.	PART NO. N° PIECES	DESCRIPTION DESCRIPTION	6HK8					REMARKS REMARQUES
27	93210–68N50	O-RING JOINT TORIQUE	1					
28	62X–4384H–00	SPRING RESSORT	1					
29	6FP–4380K–02	CYLINDER, TILT SUB ASSY CYLINDRE	1					FOR 6FP-43800-02 FOR 6FP-43800-02
	6EK–4380K–04	CYLINDER, TILT SUB ASSY CYLINDRE	1					FOR 6EK-43800-04 FOR 6EK-43800-04
30	6C6–43817–00	FILTER 2 FILTRE 2	2					
31	69J–4389J–00	O-RING JOINT TORIQUE	2					
32	6C5–43816–00	FILTER 1 FILTRE 1	1					
33	6C5–4380G–00	PLATE PLAQUE	1					
34	91318–05045	BOLT BOULON	4					
35	6FP–43830–00	GEAR PUMP ASSY POMPE A PIGNON (ENS.)	1					FOR 6FP-43800-02 FOR 6FP-43800-02
	6EK–43830–00	GEAR PUMP ASSY POMPE A PIGNON (ENS.)	1					FOR 6EK-43800-04 FOR 6EK-43800-04
36	69J–4389J–00	.O-RING .JOINT TORIQUE	2					
37	6D8–4384M–00	.PISTON, SHUTTLE 2 .PISTON 2	1					
38	6H1–43883–00	.O-RING .JOINT TORIQUE	1					
39	6EK–4382E–00	.ADAPTOR 2 .ADAPTEUR 2	2					
40	93505–32038	.BALL .BILLE	6					
41	6C6–43853–00	.SPRING, MAIN VALVE .RESSORT	2					
42	6C6–4387G–00	.WASHER .RONDELLE	2					
43	93210–04N51	.O-RING .JOINT TORIQUE	1					
44	93210–064A5	.O-RING .JOINT TORIQUE	1					
45	6D8–43851–00	.SEAT, RELIEF VALVE .SIEGE	1					
46	6C5–43855–10	.SPRING, UP RELIEF .RESSORT	1					
47	93501–08001	.BALL .BILLE	2					
48	6D8–43844–00	.PIN, VALVE SUPPORT .GOUPILLE	1					
49	6EK–43856–00	.SPRING, DOWN RELIEF .RESSORT	1					
50	6D8–43843–00	.SCREW, VALVE LOCK .VIS	1					
51	6C5–43895–00	.SEAT, RELIEF VALVE .SIEGE	1					

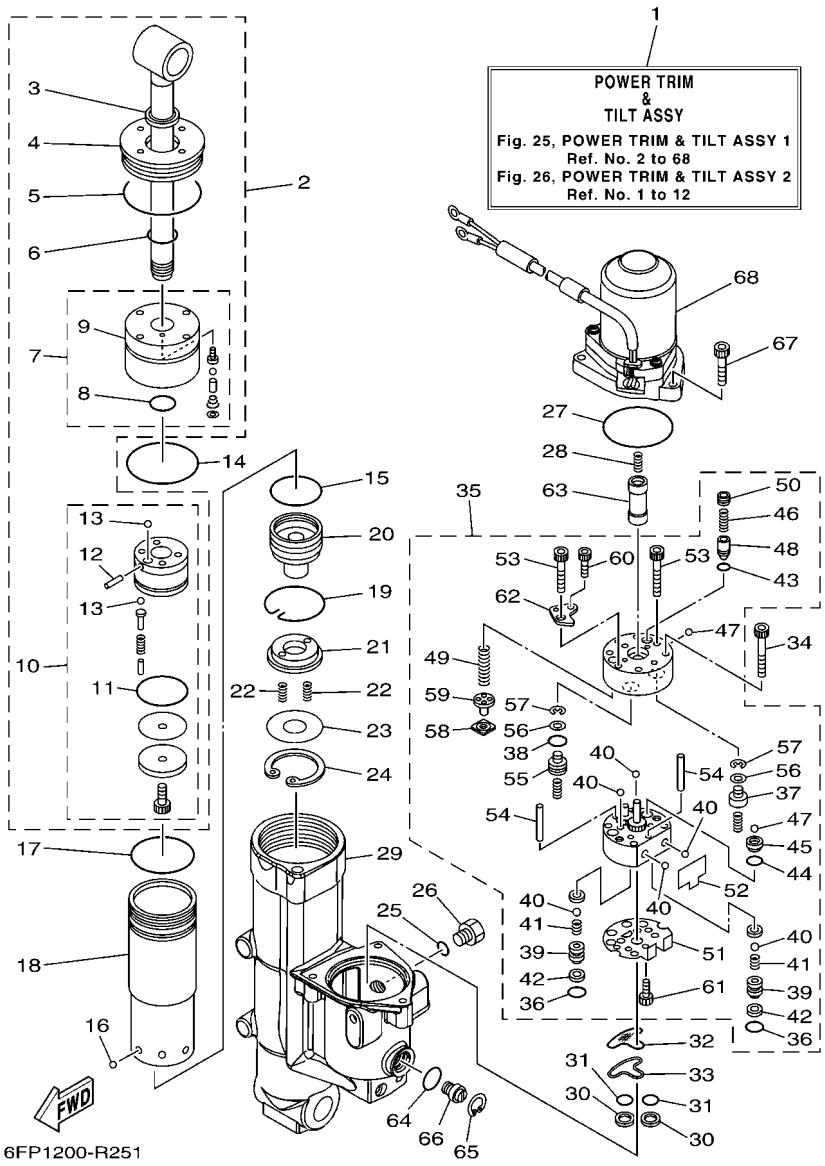

FIG. 25 POWER TRIM & TILT ASSY 1 — PUISSANCE PARER ET INCLINER 1

REF. NO.	PART NO. N° PIECES	DESCRIPTION DESCRIPTION	6HK8					REMARKS REMARQUES
52	6C5–43854–00	.SPRING, MANUAL RELEASE .RESSORT	1					
53	91318–05030	.BOLT .BOULON	2					
54	93604–26256	.PIN, DOWEL .CLAVETTE	2					
55	6D8–43841–00	.PISTON, SHUTTLE .PISTON	1					
56	69A–4384F–00	.SEAL, MAIN VALVE .JOINT	2					
57	99002–03600	.CIRCLIP .CIRCLIP	2					
58	6H1–4384G–11	.SEAL, RELIEF VALVE .JOINT	1					
59	6H1–43844–10	.PIN, VALVE SUPPORT .GOUPILLE	1					
60	91318–03025	.BOLT .BOULON	2					
61	91318–03005	.BOLT .BOULON	1					
62	6D8–4382L–00	.CAP, RELIEF VALVE .CAPUCHON	1					
63	6EK–43831–00	CONNECTOR, SHAFT RACCORD	1					
64	6D8–43863–00	O-RING JOINT TORIQUE	1					
65	6H1–43875–00	RING, SNAP RESSORT	1					
66	6EK–43845–00	SCREW, MANUAL RELEASE VIS	1					
67	91380–06025	BOLT BOULON	3					
68	6EK–43880–13	MOTOR ASSY MOTEUR (ENS.)	1					REFER TO FIG.26 REFER TO FIG.26

FIG. 26 POWER TRIM & TILT ASSY 2 — PUISSANCE PARER ET INCLINER 2

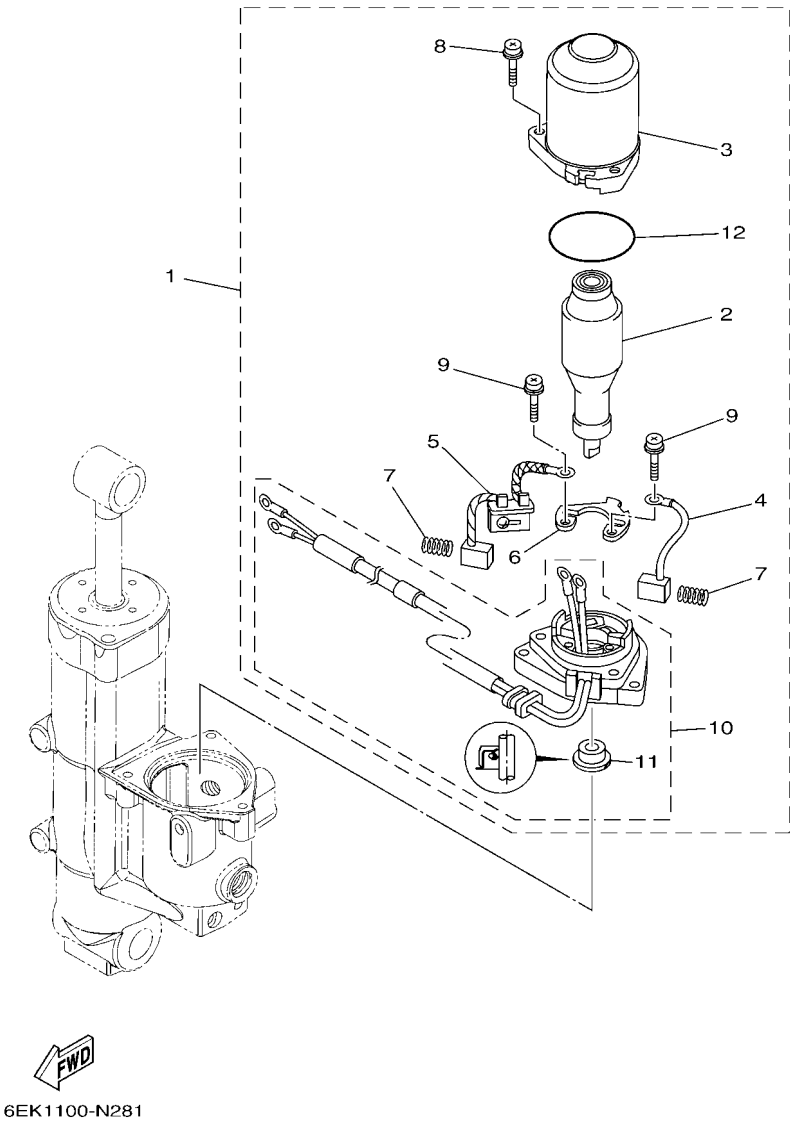

REF. NO.	PART NO. N° PIECES	DESCRIPTION DESCRIPTION	6HK8					REMARKS REMARQUES
1	6EK–43880–13	MOTOR ASSY MOTEUR (ENS.)	1					
2	6EK–43805–01	.ARMATURE ASSY .INDUIT (ENS.)	1					
3	6EK–43804–11	.STATOR ASSY .STATOR (ENS.)	1					
4	6EK–43892–00	.BRUSH 2 .BALAI 2	1					
5	6EK–82181–00	.CIRCUIT BREAKER COMP. .RUPTEUR COMPLET	1					
6	6EK–4380F–00	.PLATE, BRUSH HOLDER .PLAQUE	1					
7	62X–4386K–00	.SPRING, BRUSH .RESSORT, BALAI	2					
8	63P–43879–10	.SCREW, WITH WASHER .VIS, AVEC RONDELLE	3					
9	97602–04316	.SCREW, PAN HEAD WITH WASHER .VIS, AVEC RONDELLE	2					
10	6EK–43881–13	.FRAME, END .BATI	1					
11	6EK–43882–00	..OIL SEAL ..JOINT SPI	1					
12	6EK–43862–01	.O-RING .JOINT TORIQUE	1					

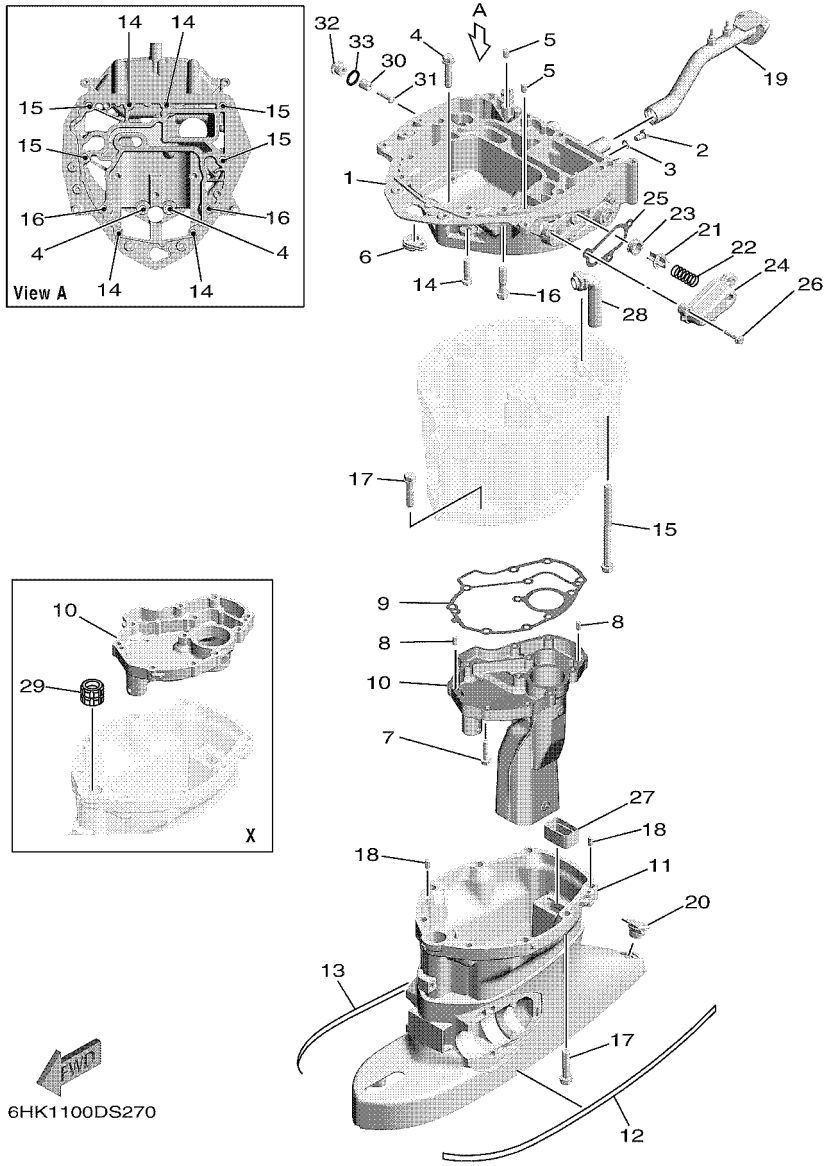

FIG. 27 UPPER CASING FOURREAU

REF. NO.	PART NO. N° PIECES	DESCRIPTION DESCRIPTION	6HK8					REMARKS REMARQUES
1	6EK–41137–01	GUIDE, EXHAUST COLLECTEUR D'ECHAPPEMENT	1					
2	97D95–08014	BOLT, HEXAGON DEEP RECESS VIS HEXAGONAL	1					
3	90430–08143	GASKET JOINT	1					
4	97E75–10545	BOLT, HEXAGON W/W DEEP RECESS VIS HEXAGONAL AVC RONDELLE	2					
5	93608–12M05	PIN, DOWEL AXE	2					
6	6EK–42727–01	GROMMET PASSE-FIL	1					
7	95D95–06030	BOLT, FLANGE DEEP RECESS BOULON FIXATION	11					
8	93606–12019	PIN, DOWEL GOUPILLE	2					
9	6EK–41134–00	GASKET, EXHAUST MANIFOLD JOINT, PIPE D'ECHAPPEMENT	1					
10	6FP–14711–00–CA	MUFFLER 1 POT D'ECHAPPEMENT 1	1					L(20.3") L(20.3")
	6EK–45181–01	PLATE PLAQUETTE	1					X(25.3") X(25.3")
11	6EK–45111–00–8D	CASING, UPPER FOURREAU	1					L(20.3") L(20.3")
	6EK–45111–10–8D	CASING, UPPER FOURREAU	1					X(25.3") X(25.3")
12	6N9–42791–41	MARK 1 ETIQUETTE 1	1					
13	6N9–42792–41	MARK 2 ETIQUETTE 2	1					
14	97E75–08535	BOLT, HEXAGON W/W DEEP RECESS VIS HEXAGONAL AVC RONDELLE	4					
15	90119–10007	BOLT, WITH WASHER BOULON, AVEC RONDELLE	4					
16	97E75–10545	BOLT, HEXAGON W/W DEEP RECESS VIS HEXAGONAL AVC RONDELLE	2					
17	97E75–10545	BOLT, HEXAGON W/W DEEP RECESS VIS HEXAGONAL AVC RONDELLE	8					
18	93606–12019	PIN, DOWEL GOUPILLE	2					
19	6EK–42769–01	SEAL, RUBBER BOURRELET, CAOUTCHOUC	1					
20	6C5–45155–02	CAP CAPUCHON	1					
21	6G5–12416–00	VALVE, PRESSURE CONTROL SOUPAPE DE CONTROLEUR PRESS	1					
22	90501–200A2	SPRING, COMPRESSION RESSORT, COMPRESSION	1					
23	90480–20M05	GROMMET PASSE-FIL	1					
24	6EK–1246A–00–9S	COVER 1 COUVERCLE 1	1					
25	6EK–12435–A0	GASKET JOINT	1					

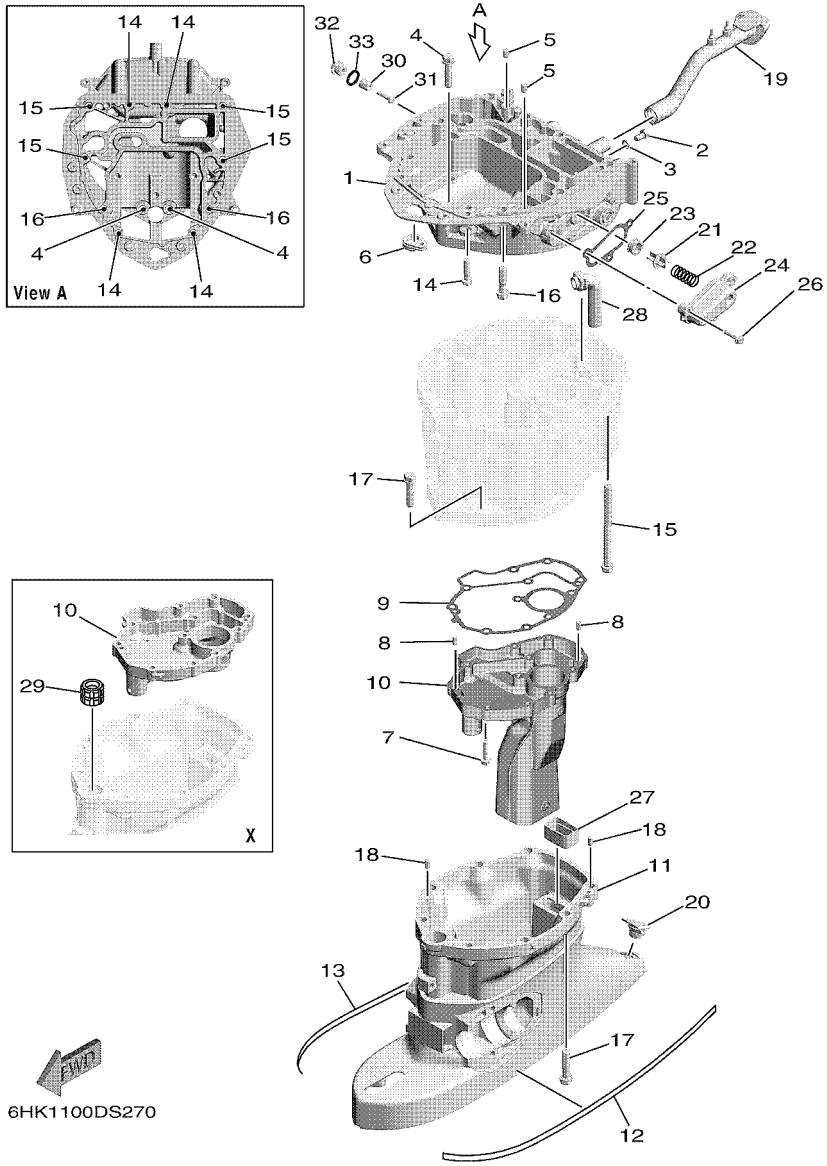

FIG. 27 UPPER CASING FOURREAU

REF. NO.	PART NO. N° PIECES	DESCRIPTION DESCRIPTION	6HK8					REMARKS REMARQUES
26	95D95–06025	BOLT, FLANGE DEEP RECESS BOULON FIXATION	3					
27	67F–45127–00	SEAL JOINT	1					
28	6EK–45135–00	PIPE TUYAU	1					
29	6EK–45318–00	BUSHING, DRIVE SHAFT DOUILLE, ARBRE MOTEUR	1					X(25.3") X(25.3")
30	6G8–11325–00	ANODE ANODE	1					
31	98980–05025	SCREW, BIND VIS, DE PRESSION	1					
32	6G8–11197–A0	PLUG, BLIND PLOT, BORGNE	1					
33	93210–13M63	O-RING JOINT TORIQUE	1					

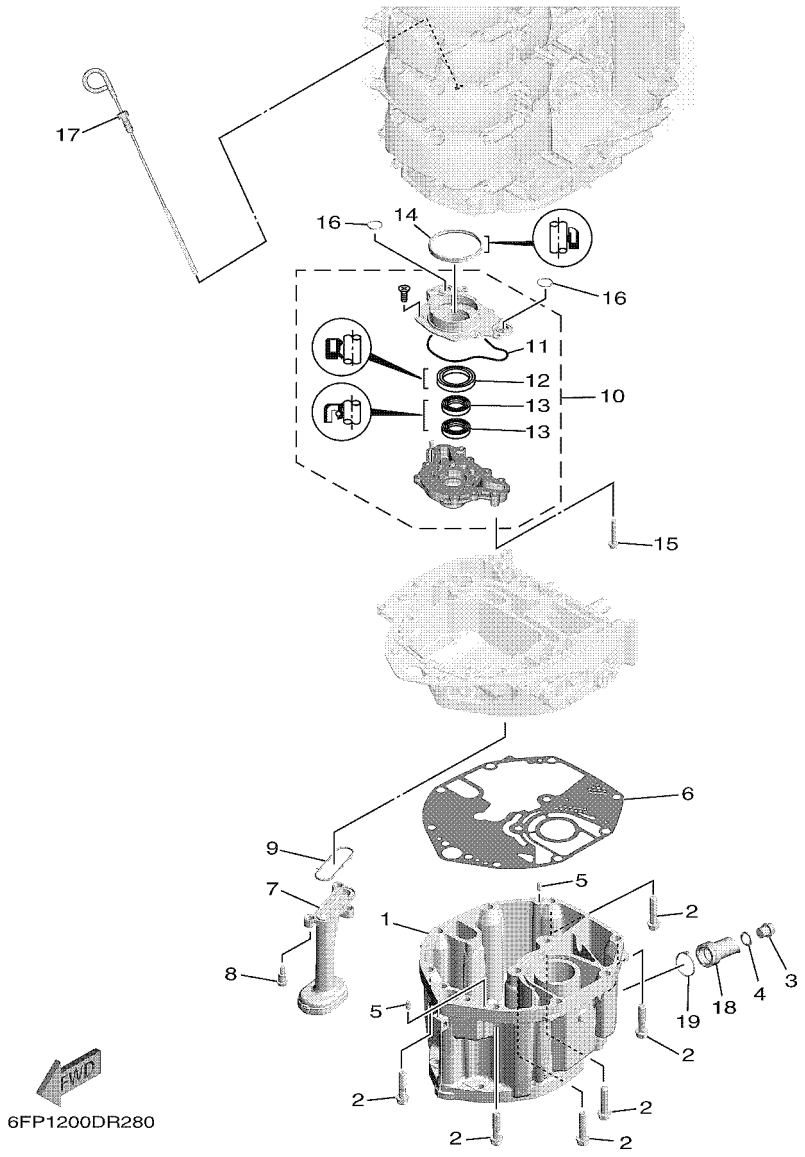

FIG. 28 OIL PAN — VENTILATEUR D'HUILE

REF. NO.	PART NO. N° PIECES	DESCRIPTION DESCRIPTION	6HK8					REMARKS REMARQUES
1	6EK–15311–01	OIL PAN VENTILATEUR D'HUILE	1					
2	97E75–10545	BOLT, HEXAGON W/W DEEP RECESS VIS HEXAGONAL AVC RONDELLE	6					
3	90340–14M06	PLUG, STRAIGHT SCREW PLOT, FILETE DROIT	1					
4	90430–14M09	GASKET JOINT	1					
5	93606–12019	PIN, DOWEL GOUPILLE	2					
6	6EK–15312–01	GASKET, OIL PAN JOINT DE VENTILATEUR D'HUILE	1					
7	67F–13411–00	STRAINER, OIL FILTRE, HUILE	1					
8	90109–06292	BOLT BOULON	3					
9	67F–13415–00	SEAL, OIL STRAINER JOINT, FILTRE A HUILE	1					
10	6EK–13300–00	OIL PUMP ASSY POMPE A HUILE COMPLETE	1					
11	6EK–13329–00	.GASKET, PUMP COVER .JOINT, COUVERCLE DE POMPE	1					
12	6AW–13119–00	.OIL SEAL .JOINT SPY	1					
13	69J–13631–00	.OIL SEAL .JOINT SPY	2					
14	69J–11355–00	SEAL, CYLINDER 1 JOINT, SPY CYLINDRE	1					
15	90105–06151	BOLT, FLANGE BOULON, A COLLERETTE	4					
16	93210–19MJ1	O-RING JOINT TORIQUE	2					
17	6FP–15362–00	PLUG, OIL LEVEL PLOT, NIVEAU D'HUILE	1					
18	6EK–15316–00	DAMPER 1 AMORTISSEUR 1	1					
19	90465–11M59	CLAMP BRIDE	1					

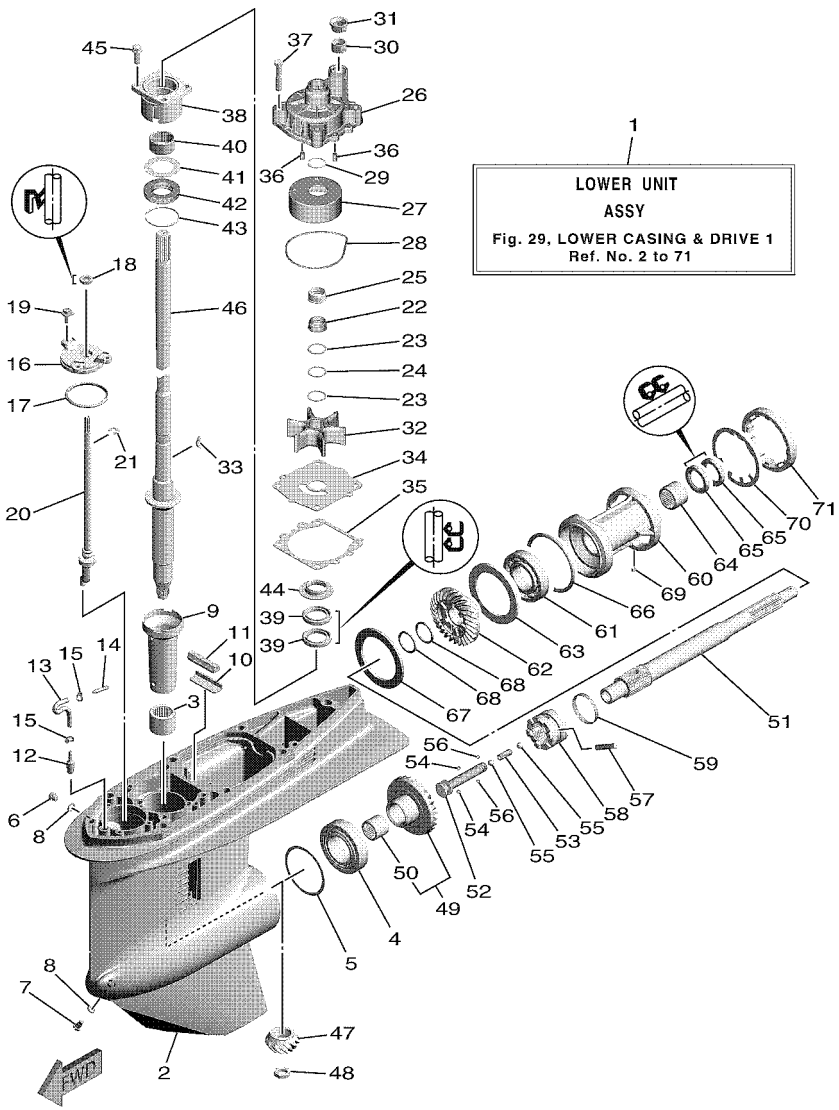

FIG. 29 LOWER CASING & DRIVE 1 — BOITIER D'HELICE TRANSMISSION1

REF. NO.	PART NO. N° PIECES	DESCRIPTION DESCRIPTION	6HK8					REMARKS REMARQUES
1	6HK–45300–03–NA	LOWER UNIT ASSY UNITE INFERIEURE (ENS.)	1					L(20.3") L(20.3")
	6HK–45300–13–NA	LOWER UNIT ASSY UNITE INFERIEURE (ENS.)	1					X(25.3") X(25.3")
2	6E5–45301–07–NA	CASING, LOWER BEQUILLE	1					
3	93315–628U9	BEARING ROULEMENT	1					
4	93332–000U7	BEARING ROULEMENT	1					
5	6E5–45567–01	SHIM (T:0.10MM) CALE (T:0.10MM)	1					UR UR
	6E5–45567–10	SHIM (T:0.12MM) CALE (T:0.12MM)	1					UR UR
	6E5–45567–20	SHIM (T:0.15MM) CALE (T:0.15MM)	1					UR UR
	6E5–45567–30	SHIM (T:0.18MM) CALE (T:0.18MM)	1					UR UR
	6E5–45567–40	SHIM (T:0.30MM) CALE (T:0.30MM)	1					UR UR
	6E5–45567–50	SHIM (T:0.40MM) CALE (T:0.40MM)	1					UR UR
	6E5–45567–60	SHIM (T:0.50MM) CALE (T:0.50MM)	1					UR UR
6	90340–08002	PLUG, STRAIGHT SCREW PLOT, FILETE DROIT	1					
7	688–45341–10	PLUG, DRAIN BOUCHON DE VIDANGE	1					
8	90430–08003	GASKET JOINT	2					
9	6E5–45536–00	SLEEVE, DRIVE SHAFT MANCHON, ARBRE MOTEUR	1					
10	663–45376–00	GUIDE, SEAL DAMPER BUTEE, JOINT CAOUTCHOUC	1					
11	688–45375–00	DAMPER, SEAL BOURRELET, CAOUTCHOUC	1					
12	6E5–45378–00	NIPPLE, HOSE RACCORD, TUYAU	1					
13	90445–07ME8	HOSE (L80) DURITE (L80)	1					L(20.3") L(20.3")
	90445–07ME9	HOSE (L120) DURITE (L120)	1					X(25.3") X(25.3")
14	6E5–83558–10	END, NIPPLE RACCORD DE NIPPLE	1					
15	90465–11M10	CLAMP BRIDE	2					
16	6E5–45321–00	PLATE PLAQUETTE	1					
17	93210–58144	O-RING JOINT TORIQUE	1					
18	93106–09014	OIL SEAL JOINT SPY	1					
19	90119–06286	BOLT, WITH WASHER BOULON, AVEC RONDELLE	3					

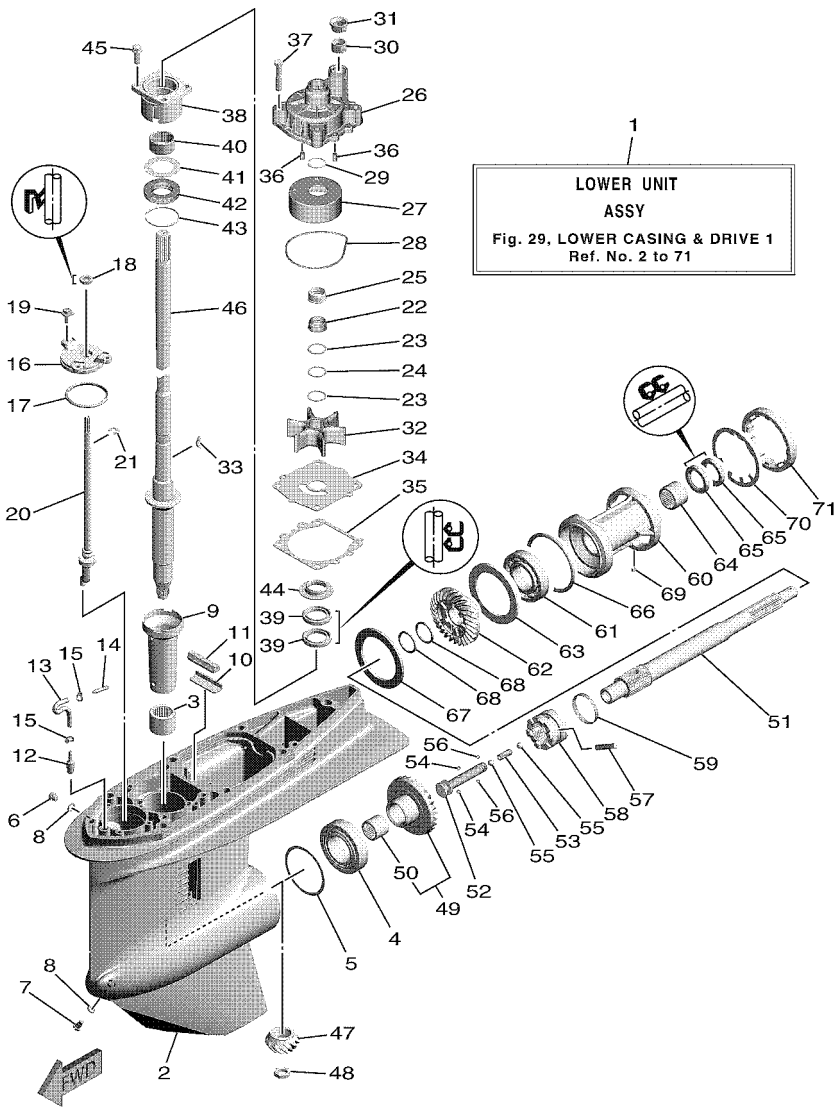

FIG. 29 LOWER CASING & DRIVE 1 — BOITIER D'HELICE TRANSMISSION1

REF. NO.	PART NO. N° PIECES	DESCRIPTION DESCRIPTION	6HK8					REMARKS REMARQUES
20	6E5–44150–03	SHIFT CAM ASSY CAME D'INVERSION	1					
21	99001–08600	CIRCLIP CIRCLIP	1					
22	61A–45538–00	SPACER 1 ENTRETOISE	1					
23	90201–22M01	WASHER, PLATE RONDELLE, PLATE	2					
24	90206–22M19	WASHER, WAVE RONDELLE, ONDULEE	1					
25	61A–45527–00	COLLAR, DRIVE SHAFT ENTRETOISE	1					
26	61A–44311–01	HOUSING, WATER PUMP CORPS, POMPE A EAU	1					
27	61A–44322–02	INSERT, CARTRIDGE CUVETTE	1					
28	93210–86M38	O-RING JOINT TORIQUE	1					
29	93210–37160	O-RING JOINT TORIQUE	1					
30	6E5–44365–01	DAMPER, WATER SEAL 1 JOINT, TUBE D'EAU 1	1					
31	6E5–44312–00	COVER, WATER PUMP HOUSING COUVERCLE	1					
32	6E5–44352–01	IMPELLER TURBINE	1					
33	90280–04M05	KEY, WOODRUFF CLAVETTE, DEMI-LUNE	1					
34	6EK–44323–00	OUTER PLATE, CARTRIDGE PLAQUE EXTERIEURE	1					
35	6E5–44315–A0	GASKET, WATER PUMP JOINT, POMPE A EAU	1					
36	93606–12019	PIN, DOWEL GOUPILLE	2					
37	90119–08191	BOLT, WITH WASHER BOULON, AVEC RONDELLE	4					
38	6E5–45331–00–9S	HOUSING, BEARING FLASQUE, ROULEMENT	1					
39	93101–28M16	OIL SEAL JOINT SPY	2					
40	93317–330U2	BEARING ROULEMENT	1					
41	6E5–45587–01	SHIM (T:0.10MM) CALE (T:0.10MM)	1					UR UR
	6E5–45587–10	SHIM (T:0.12MM) CALE (T:0.12MM)	1					UR UR
	6E5–45587–20	SHIM (T:0.15MM) CALE (T:0.15MM)	1					UR UR
	6E5–45587–30	SHIM (T:0.18MM) CALE (T:0.18MM)	1					UR UR
	6E5–45587–40	SHIM (T:0.30MM) CALE (T:0.30MM)	1					UR UR
	6E5–45587–50	SHIM (T:0.40MM) CALE (T:0.40MM)	1					UR UR

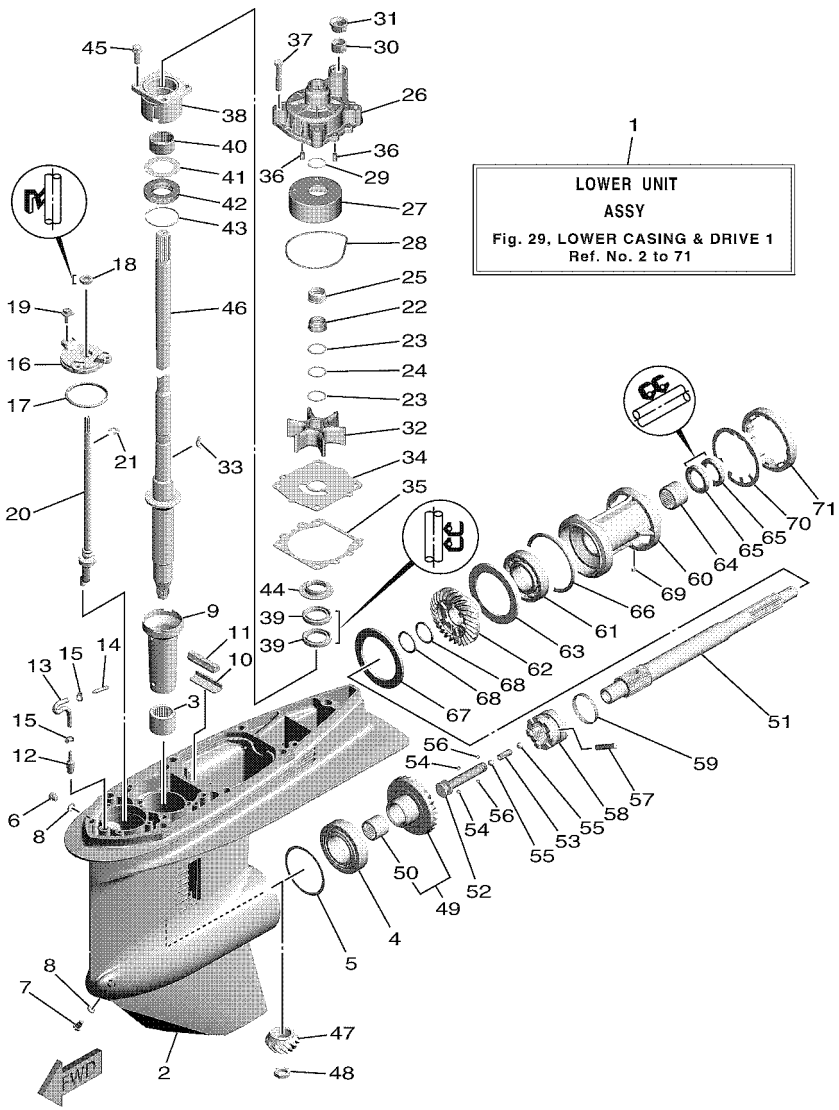

FIG. 29 LOWER CASING & DRIVE 1 — BOITIER D'HELICE TRANSMISSION1

REF. NO.	PART NO. N° PIECES	DESCRIPTION DESCRIPTION	6HK8					REMARKS REMARQUES
41	6E5–45587–60	SHIM (T:0.50MM) CALE (T:0.50MM)	1					UR UR
42	93341–930V2	BEARING CERVEAUX DE DIRECTION	1					
43	93210–55M14	O-RING JOINT TORIQUE	1					
44	6E5–45344–00	COVER, OIL SEAL FLASQE, JOINT D'HUILE	1					
45	97E95–08525	BOLT, HEXAGON W/W DEEP RECESS VIS HEXAGONAL AVC RONDELLE	4					
46	6EK–45501–00	DRIVE SHAFT COMP. ARBRE MOTEUR COMP.	1					L(20.3") L(20.3")
	6EK–45501–10	DRIVE SHAFT COMP. ARBRE MOTEUR COMP.	1					X(25.3") X(25.3")
47	6HK–45551–00	PINION (12T) PIGNON D'ATTAQUE (12D)	1					
48	90170–16M01	NUT ECROU	1					
49	6HK–45560–00	GEAR 1 (28T) PIGNON 1 (28T)	1					
50	93315–425U7	.BEARING .ROULEMENT	1					
51	6E5–45611–01	SHAFT, PROPELLER ARBRE, HELICE	1					
52	6E5–45634–02	SLIDE, SHIFT CONTRE-POUSSOIR	1					
53	90501–16M37	SPRING, COMPRESSION RESSORT, COMPRESSION	1					
54	93507–32009	BALL BILLE	2					
55	93511–32017	BALL BILLES	2					
56	93503–16003	BALL BILLES	2					
57	90250–08M07	PIN, STRAIGHT GOUPILLE, DROITE	1					
58	68V–45631–02	CLUTCH, DOG CRABOT	1					
59	6E5–45633–01	RING, CROSS PIN JONC, GOUPILLE CRABOT	1					
60	6E5–45332–00–CA	HOUSING, BEARING FLASQUE, ROULEMENT	1					
61	93306–208U0	BEARING ROULEMENT	1					
62	6HK–45571–00	GEAR 2 (28T) PIGNON 2 (28T)	1					
63	6E5–45576–00	WASHER, THRUST 2 RONDELLE DE CALAGE 2	1					
64	93315–430U8	BEARING ROULEMENT	1					
65	93101–30M17	OIL SEAL JOINT SPY	2					
66	93210–86M39	O-RING JOINT TORIQUE	1					

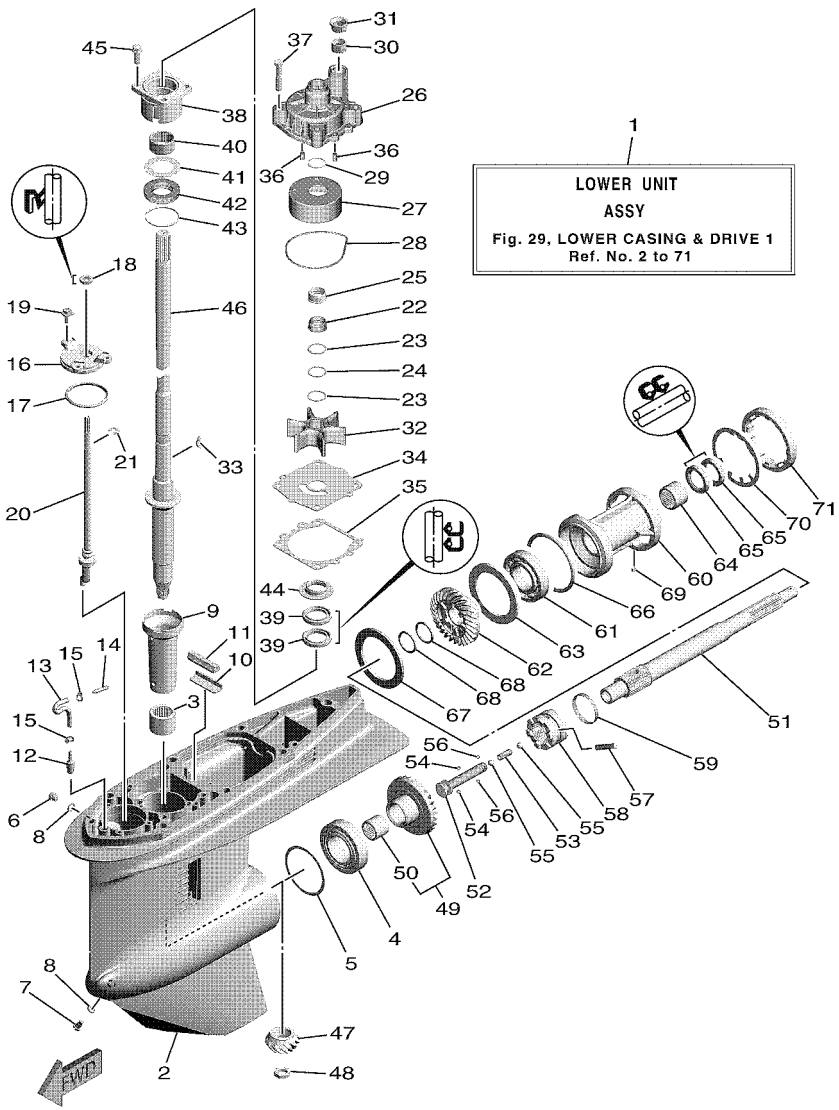

FIG. 29 LOWER CASING & DRIVE 1 — BOITIER D'HELICE TRANSMISSION1

REF. NO.	PART NO. N° PIECES	DESCRIPTION DESCRIPTION	6HK8					REMARKS REMARQUES
67	6L6–45577–00	SHIM (T:0.10MM) CALE (T:0.10MM)	1					UR UR
	6L6–45577–10	SHIM (T:0.12MM) CALE (T:0.12MM)	1					UR UR
	6L6–45577–20	SHIM (T:0.15MM) CALE (T:0.15MM)	1					UR UR
	6L6–45577–30	SHIM (T:0.18MM) CALE (T:0.18MM)	1					UR UR
	6L6–45577–40	SHIM (T:0.30MM) CALE (T:0.30MM)	1					UR UR
	6L6–45577–50	SHIM (T:0.40MM) CALE (T:0.40MM)	1					UR UR
	6L6–45577–60	SHIM (T:0.50MM) CALE (T:0.50MM)	1					UR UR
68	90201–30M92	WASHER, PLATE RONDELLE, PLATE	2					
69	90282–04010	KEY, STRAIGHT CLAVETTE, DROITE	1					
70	688–45383–02	WASHER, CLAW FREIN D'ECROU	1					
71	688–45384–02	NUT ECROU	1					

FIG. 30 LOWER CASING & DRIVE 2 — BOITIER D'HELICE TRANSMISSION2

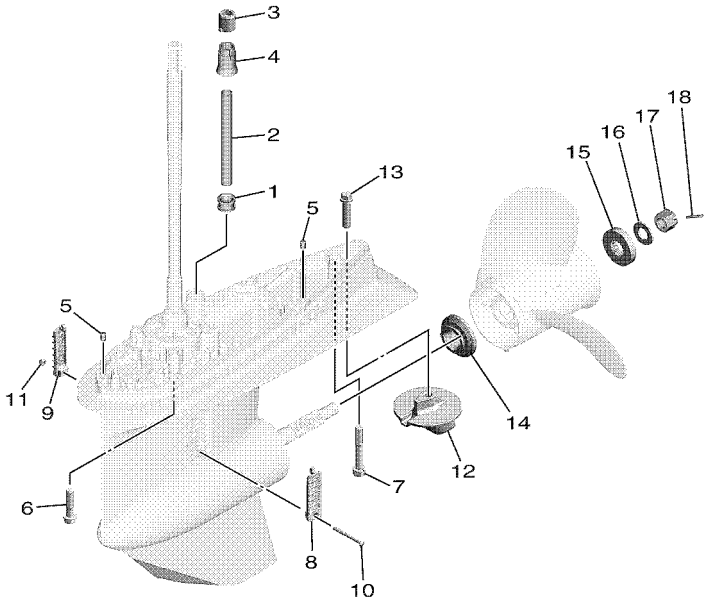

6HK1100DS300

REF. NO.	PART NO. N° PIECES	DESCRIPTION DESCRIPTION	6HK8					REMARKS REMARQUES
1	6E5–44366–01	DAMPER, WATER SEAL 2 JOINT, TUBE D'EAU 2	1					
2	90440–16001	PIPE (L167) DURITE (L167)	1					L(20.3") L(20.3")
	90440–16002	PIPE (L294) DURITE (L294)	1					X(25.3") X(25.3")
3	6EK–44365–01	DAMPER, WATER SEAL 1 JOINT, TUBE D'EAU 1	1					
4	6EK–44379–00	GUIDE, WATER TUBE GUIDE DE TUBE D'EAU	1					
5	93608–12M05	PIN, DOWEL AXE	2					
6	97E95–10545	BOLT, HEXAGON W/W DEEP RECESS VIS HEXAGONAL AVC RONDELLE	6					
7	90119–10071	BOLT, WITH WASHER BOULON, AVEC RONDELLE	1					
8	688–45214–02	COVER, WATER INLET 1 GRILLE, ENTREE D'EAU 1	1					
9	688–45215–02	COVER, WATER INLET 2 GRILLE, ENTREE D'EAU 2	1					
10	90152–05M07	SCREW, COUNTERSUNK VIS, TETE NOYEE	1					
11	90185–05002	NUT, NYLON ECROU,AUTO-BLOQUANT	1					
12	6E5–45371–01	TAB-TRIM ANODE DERIVE	1					
13	90105–10M00	BOLT, FLANGE BOULON, A COLLERETTE	1					
14	63P–45987–00	SPACER 1 ENTRETOISE 1	1					
15	688–45997–01	SPACER 2 ENTRETOISE 2	1					
16	92990–18200	WASHER RONDELLE, PLATE	1					
17	90171–18M04	NUT, CASTLE ECROU, CRENELE	1					
18	91490–40030	PIN. COTTER GOUPILLE	1					

FIG. 31 FUEL TANK — RESERVOIR A CARBURANT

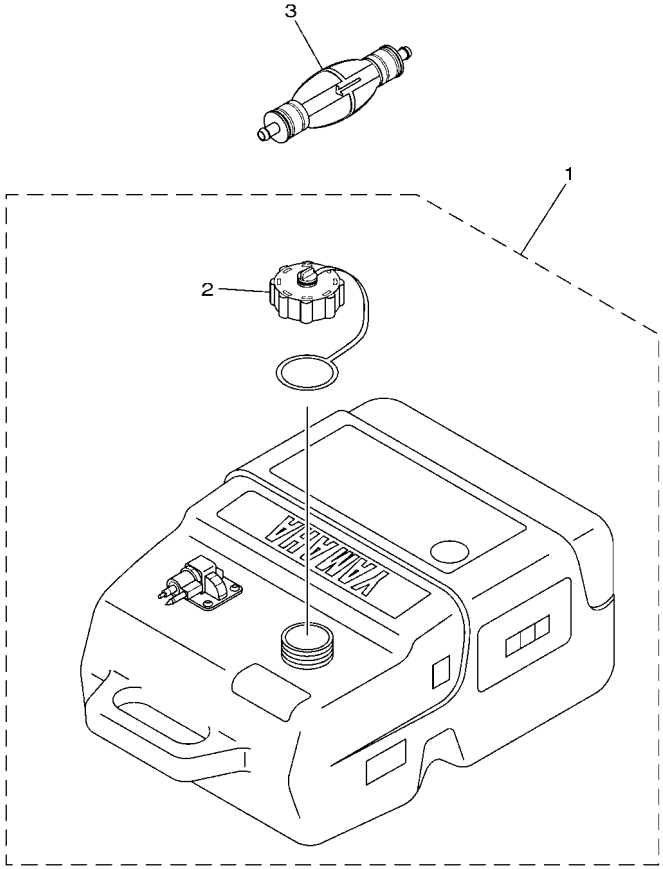

6FP1100-R310

REF. NO.	PART NO. N° PIECES	DESCRIPTION DESCRIPTION	6HK8					REMARKS REMARQUES
1	6YK–24201–44	FUEL TANK ASSY (25L) RESERVOIR A ESSENCE (ENS.) 25L	1					AP AP
2	6YL–24610–10	.CAP ASSY .BOUCHON	1					
3	6YK–24360–73	PRIMER PUMP ASSY POMPE D'AMORCAGE	1					AP AP

FIG. 32 STEERING GUIDE — FIXATION DE DIRECTION

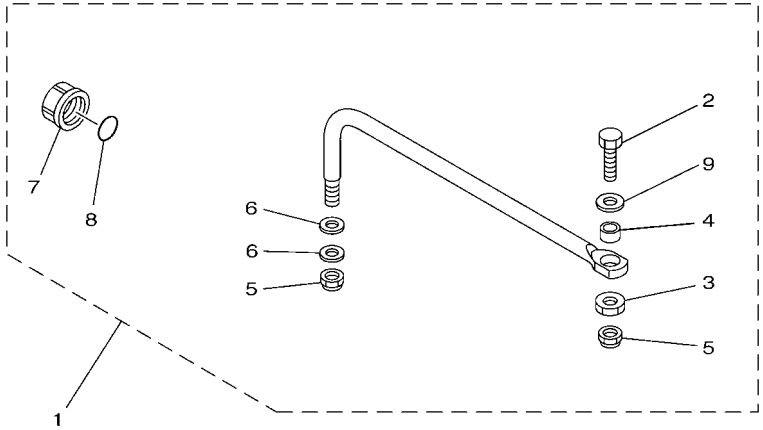

6EK1100-N330

REF. NO.	PART NO. N° PIECES	DESCRIPTION DESCRIPTION	6HK8					REMARKS REMARQUES
1	6EK–61350–00	STEERING GUIDE ATTACHMENT KIT FIXATIONS DE DIRECTION	1					AP AP
2	6E5–61355–00	.BOLT .BOULON	1					
3	90170–09M03	.NUT .ECROU	1					
4	90387–10M42	.COLLAR .COLLERETTE	1					
5	90185–09M01	.NUT, SELF-LOCKING .ECROU,AUTO-BLOQUANT	2					
6	90201–10M20	.WASHER, PLATE .RONDELLE, PLATE	2					
7	6E5–43145–01	.CAP, CLAMP BRACKET .CAPUCHON, PRESSE	1					
8	93210–16275	.O-RING .JOINT TORIQUE	1					
9	90201–10081	.WASHER, PLATE .RONDELLE, PLATE	1					

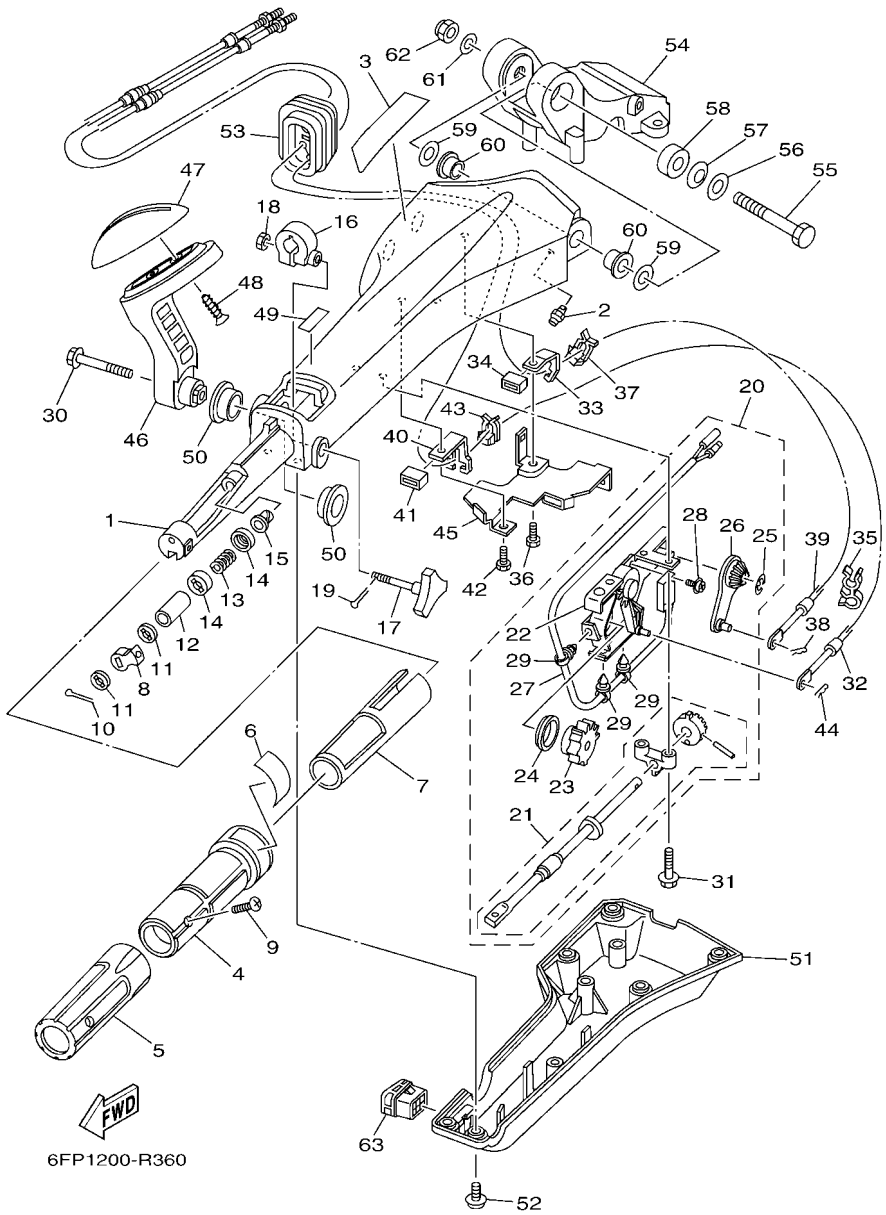

FIG. 33 OPTIONAL PARTS 1 — PIECES OPTIONNELLES 1

REF. NO.	PART NO. N° PIECES	DESCRIPTION DESCRIPTION	6HK8					REMARKS REMARQUES
1	6X4–42111–02–8D	HANDLE, STEERING POIGNEE	1					
2	93700–06002	NIPPLE, GREASE PION	1					
3	6X4–48215–00	GRAPHIC ADHESIF	1					
4	6X4–42119–01	GRIP, STEERING HANDLE POIGNEE, BARRE FRANCHE	1					
5	6X4–42177–01	RUBBER, HANDLE CAOUTCHOUC, POIGNEE	1					
6	6X4–42137–00	INDICATOR, THROTTLE INDICATEUR, ACCELERATION	1					
7	6X4–41291–00	BUSHING COUSSINET	1					
8	6X4–44139–01	COLLAR COLLIER	1					
9	90152–05007	SCREW, COUNTERSUNK VIS, TETE NOYEE	1					
10	91490–20010	PIN. COTTER GOUPILLE	1					
11	6X4–44177–00	WASHER RONDELLE	2					
12	6X4–42128–00	COLLAR, DISTANCE 1 COLLIER, D'ENTRETOISE 1	1					
13	90501–23215	SPRING, COMPRESSION RESSORT, COMPRESSION	1					
14	6X4–44188–00	WASHER RONDELLE	2					
15	90386–08032	BUSH DOUILLE	1					
16	63D–42126–00	FRICTION, STEERING HANDLE GRIP CUVETTE, POIGNEE DE DIRECTION	1					
17	6X4–48154–00	KNOB, THROTTLE BOUTON, ACCELERATEUR	1					
18	95380–06600	NUT, HEXAGON ECROU	1					
19	91490–20010	PIN. COTTER GOUPILLE	1					
20	6X4–44100–01	SHIFT LINK ASSY MAILLON DE SELECTEUR	1					
21	6X4–42115–00	.SHAFT, STEERING HANDLE .AXE, BARRE FRANCHE	1					
22	6X4–44102–00	.SHIFT ASSIST ASSY. .SELECTEUR DE MAINTIEN	1					
23	6X4–47731–01	.GEAR, DRIVE .PIGNON D'ENTRAINEMENT	1					
24	6X4–44132–00	.BUSHING .COUSSINET	1					
25	6X4–14137–00	.CLIP .JONC	1					
26	6X4–48261–00	.ARM, THROTTLE .BRAS, ACCELERATION	1					
27	6X4–82540–00	.NEUTRAL SWITCH ASSY .CONTACTEUR DE POINT-MORT	1					

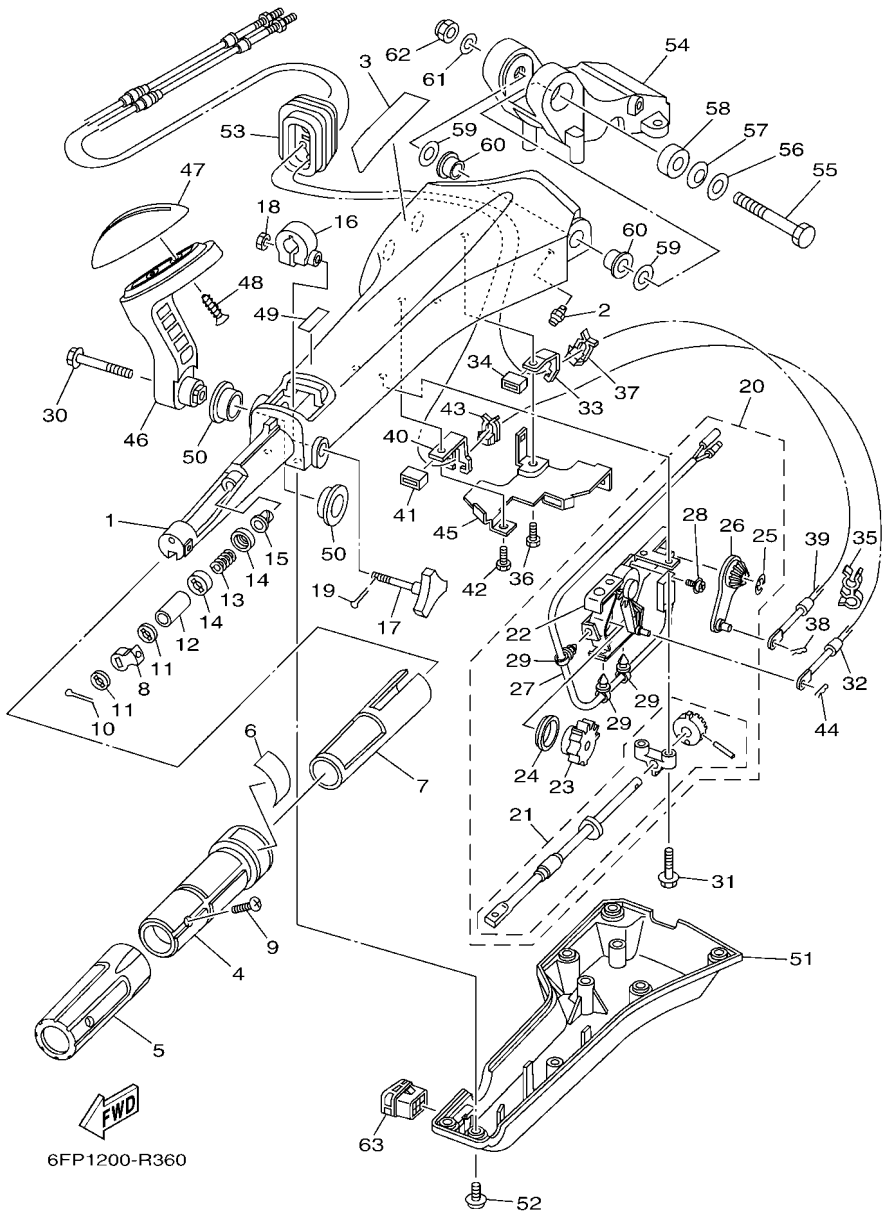

FIG. 33 OPTIONAL PARTS 1 — PIECES OPTIONNELLES 1

REF. NO.	PART NO. N° PIECES	DESCRIPTION DESCRIPTION	6HK8					REMARKS REMARQUES
28	703–48129–00	.SCREW 3 .VIS 3	2					
29	6X4–42821–00	.BAND, CLAMP .BRIDE, COLLIER	3					
30	97E95–08540	BOLT, HEXAGON W/W DEEP RECESS VIS HEXAGONAL AVC RONDELLE	1					
31	97E95–06530	BOLT, HEXAGON W/W DEEP RECESS VIS HEXAGONAL AVC RONDELLE	2					
32	6EK–48321–00	CABLE CABLE	1					
33	6X4–48538–00	CLAMP, CABLE 1 COLLIER	1					
34	6X4–26367–01	PROTECTOR PROTECTEUR	1					
35	90464–09M42	CLAMP BRIDE	1					
36	97D95–06014	BOLT, HEXAGON DEEP RECESS VIS HEXAGONAL	1					
37	63D–48538–00	CLAMP, CABLE 1 COLLIER	1					
38	90468–10005	CLIP JONC	1					
39	6FP–26301–00	THROTTLE CABLE ASSY CABLE D'ACCELERATEUR	1					
40	6X4–48538–10	CLAMP, CABLE 1 COLLIER	1					
41	6X4–26367–01	PROTECTOR PROTECTEUR	1					
42	97D95–06014	BOLT, HEXAGON DEEP RECESS VIS HEXAGONAL	1					
43	63D–48538–00	CLAMP, CABLE 1 COLLIER	1					
44	90468–10005	CLIP JONC	1					
45	6X4–42159–00	STAY SUPPORT	1					
46	6X4–44159–A0–8D	HANDLE, GEAR SHIFT POIGNEE, LEVIER D'EMBRAYAGE	1					
47	6X4–44173–00	LEVER, SHIFT CONTROL POIGNEE, INVERSION	1					
48	97780–60920	SCREW, TAPPING VIS, TETE BOMBEE	2					
49	6X3–44191–00	INDICATOR, SHIFT ETIQUETTE, EMBRAYAGE	1					
50	90386–26MA3	BUSH DOUILLE	2					
51	6X4–42131–11	COVER, HANDLE STEERING COUVERCLE	1					
52	97985–06216	SCREW, WITH WASHER VIS, AVEC RONDELLE	6					
53	6X4–42725–01	GROMMET PASSE-FIL	1					
54	63D–42121–22–8D	BRACKET SUPPORT	1					

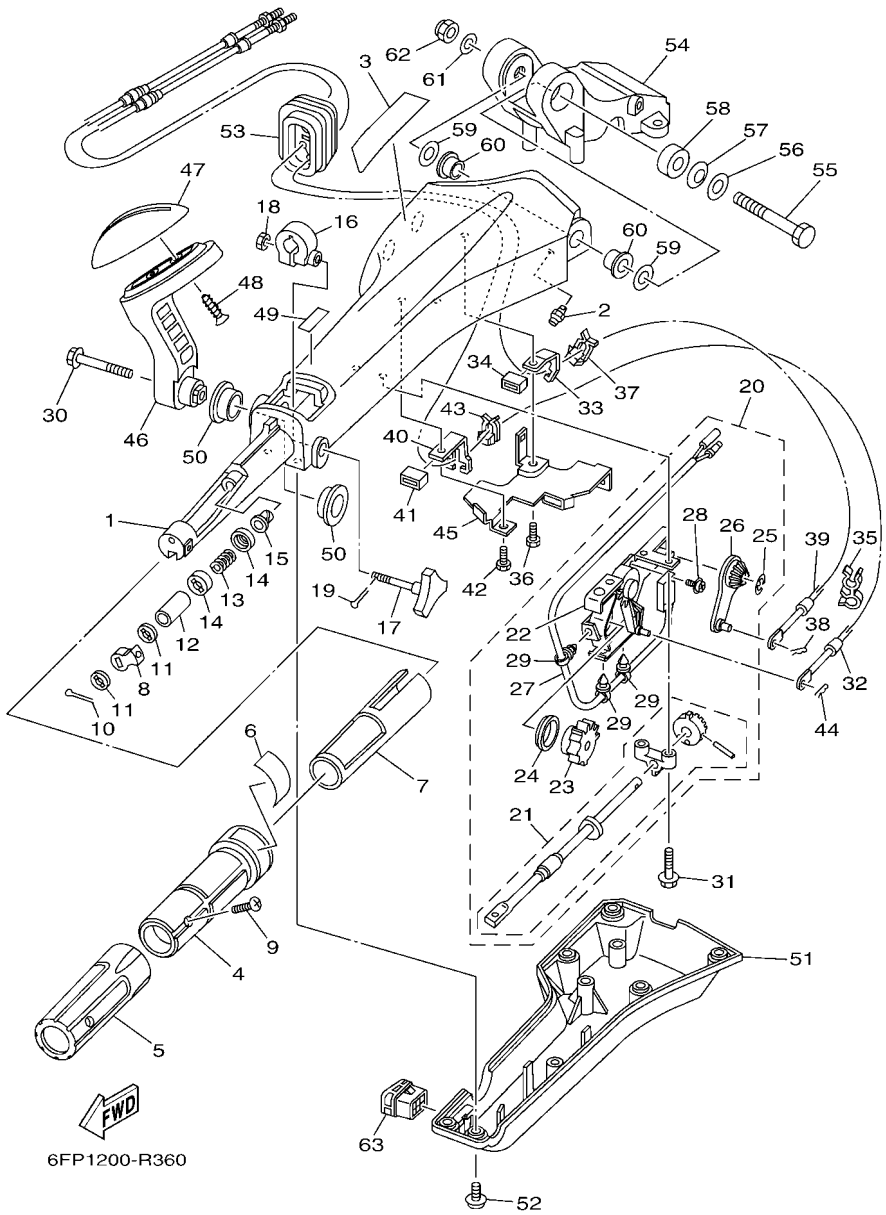

FIG. 33 OPTIONAL PARTS 1 — PIECES OPTIONNELLES 1

REF. NO.	PART NO. N° PIECES	DESCRIPTION DESCRIPTION	6HK8					REMARKS REMARQUES
55	90101–12014	BOLT BOULON	1					
56	92990–12200	WASHER, PLAIN RONDELLE, PLATE	1					
57	90206–12M22	WASHER, WAVE RONDELLE, ONDULEE	1					
58	90387–12M02	COLLAR COLLERETTE	1					
59	90201–12035	WASHER, PLATE RONDELLE, PLATE	2					
60	90386–12003	BUSH DOUILLE	2					
61	92990–12600	WASHER, PLATE RONDELLE, PLATE	1					
62	90185–12M12	NUT, SELF-LOCKING ECROU,AUTO-BLOQUANT	1					
63	6X4–42728–10	CAP CAPUCHON	1					

FIG. 34 OPTIONAL PARTS 2 — PIECES OPTIONNELLES 2

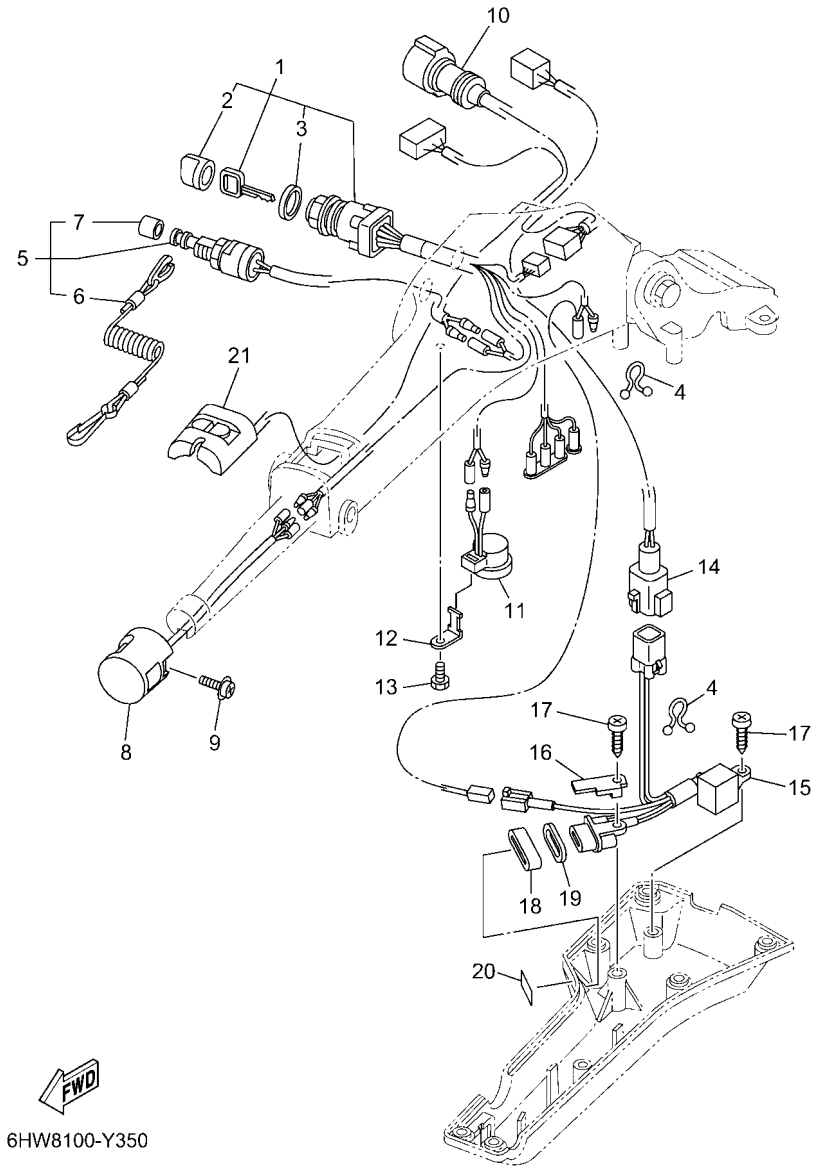

6HW8100-Y350

REF. NO.	PART NO. N° PIECES	DESCRIPTION DESCRIPTION	6HK8					REMARKS REMARQUES
1	6X4–82510–42	MAIN SWITCH ASSY CONTACTEUR A CLEF COMPLET	1					
2	676–82577–01	.CAP, KEY .CABOCHON	1					
3	703–82532–00	.CAP .COUVERCLE	1					
4	90464–08M07	CLAMP BRIDE	2					
5	69W–82575–00	ENGINE STOP SWITCH ASSY COUPE CIRCUIT CPLT	1					
6	682–82556–00	.LANYARD, STOP SWITCH .CORDON DU COUPE CIRCUIT	1					
7	689–8257Y–00	.CAP .COUVERCLE	1					
8	6X4–82563–01	TRIM & TILT SWITCH ASSY INCLINER ET PARER COMMUTATEUR	1					
9	97980–06216	SCREW, WITH WASHER VIS, AVEC RONDELLE	1					
10	6X4–82586–11	EXT., WIRE HARNESS (L:950MM) EXT, FAISCEAU DE FILS (L:950MM	1					
11	6X4–83383–00	BUZZER RONFLEUR	1					
12	6X4–83386–00	STAY, BUZZER SUPPOR, RONFLEUR	1					
13	97D95–06014	BOLT, HEXAGON DEEP RECESS VIS HEXAGONAL	1					
14	6X4–83653–20	WIRE, LEAD (L:700MM) FIL (L:700MM)	1					
15	6C5–84301–10	PILOT LIGHT ASSY 1 LAMPE-TEMOIN 1	1					
16	6X4–44114–00	STOPPER PLAQUETTE	1					
17	97780–60620	SCREW, TAPPING VIS, TETE BOMBEE	2					
18	6X4–42727–01	GROMMET PASSE-FIL	1					
19	6FM–83589–00	GASKET GARNITURE	1					
20	6X4–85415–00	MARK, SIGNAL LAMP ETIQUETTE	1					
21	6X4–81860–00	SWITCH ASSY COMMUTATEUR COMPLET	1					

FIG. 35 OPTIONAL PARTS 3 — PIECES OPTIONNELLES 3

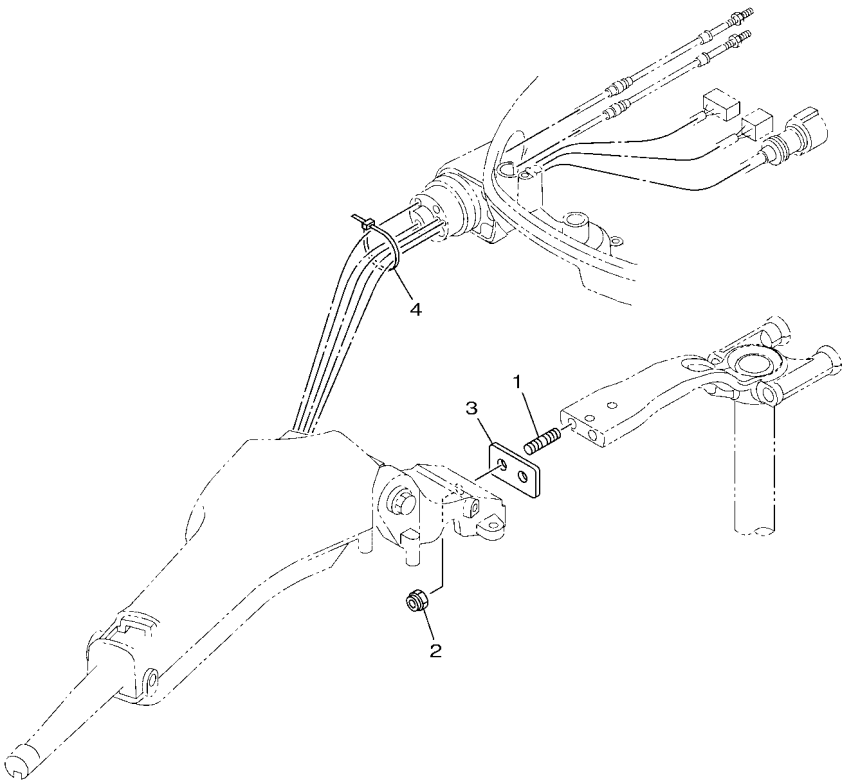

6FP1200-R380

REF. NO.	PART NO. N° PIECES	DESCRIPTION DESCRIPTION	6HK8					REMARKS REMARQUES
1	90116–10063	BOLT, STUD GOUJON	2					
2	90185–10027	NUT, SELF-LOCKING ECROU,AUTO-BLOQUANT	2					
3	6EK–42121–00	BRACKET SUPPORT	1					
4	90465–13M24	CLAMP BRIDE	1					

FIG. 36 OPTIONAL PARTS 4 — PIECES OPTIONNELLES 4

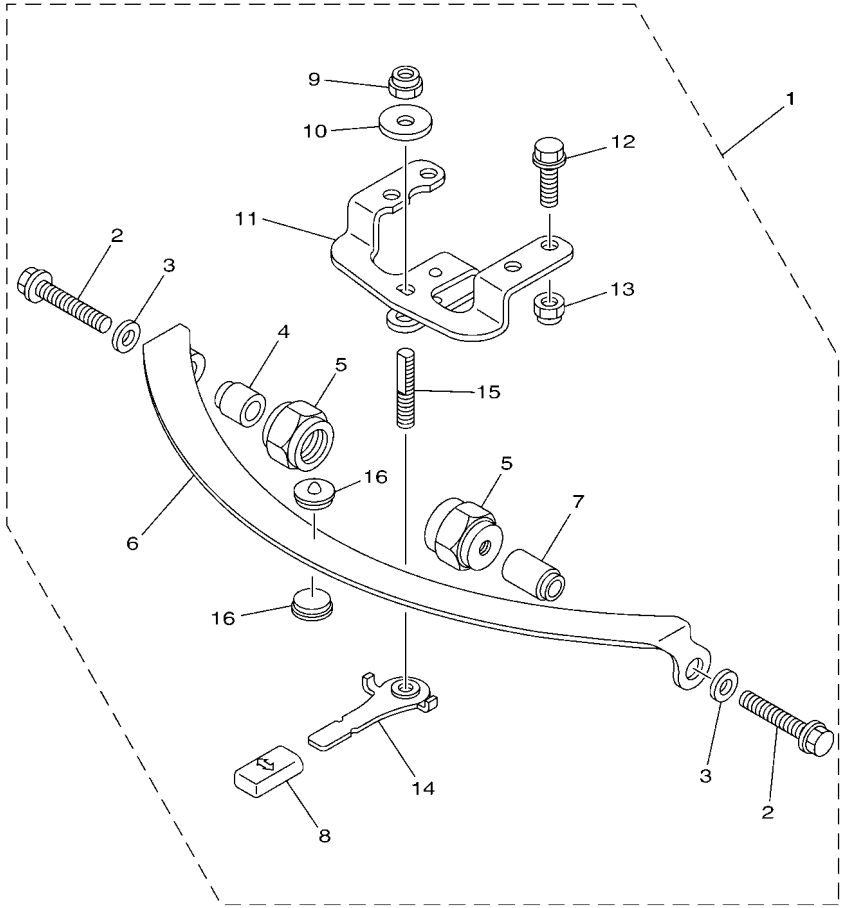

6FP1200-R390

REF. NO.	PART NO. N° PIECES	DESCRIPTION DESCRIPTION	6HK8					REMARKS REMARQUES
1	67G–42508–12	STEERING FRICTION ASSY DIRECTION FRICTION (ENS.)	1					
2	90119–08193	.BOLT, WITH WASHER .BOULON, AVEC RONDELLE	2					
3	90201–08M01	.WASHER, PLATE .RONDELLE, PLATE	2					
4	67G–42541–00	.PIPE 1 .TUYAU 1	1					
5	67G–42546–00	.NUT .ECROU	2					
6	63D–42527–00	.PLATE, FRICTION .PLAQUE, FRICTION	1					
7	67G–42541–10	.PIPE 1 .TUYAU 1	1					
8	682–43318–01	.COVER .CAPUCHON	1					
9	90185–10M14	.NUT, SELF-LOCKING .ECROU,AUTO-BLOQUANT	1					
10	90201–10M76	.WASHER, PLATE .RONDELLE, PLATE	1					
11	6X4–42526–00	.PLATE, FRICTION .PLAQUE, FRICTION	1					
12	97E95–08525	.BOLT, HEXAGON W/W DEEP RECESS .VIS HEXAGONAL AVC RONDELLE	2					
13	90185–08057	.NUT, SELF-LOCKING .ECROU,AUTO-BLOQUANT	2					
14	67G–42561–00	.KNOB, STEERING LOCK .BOUTON	1					
15	67G–42562–00	.SHAFT, STEERING LOCK .ARBRE,ANTIVOL DE DIRECTION	1					
16	63D–42528–00	.PLATE, FRICTION .PLAQUE, FRICTION	2					

FIG. 37 OPTIONAL PARTS 5 — PIECES OPTIONNELLES 5

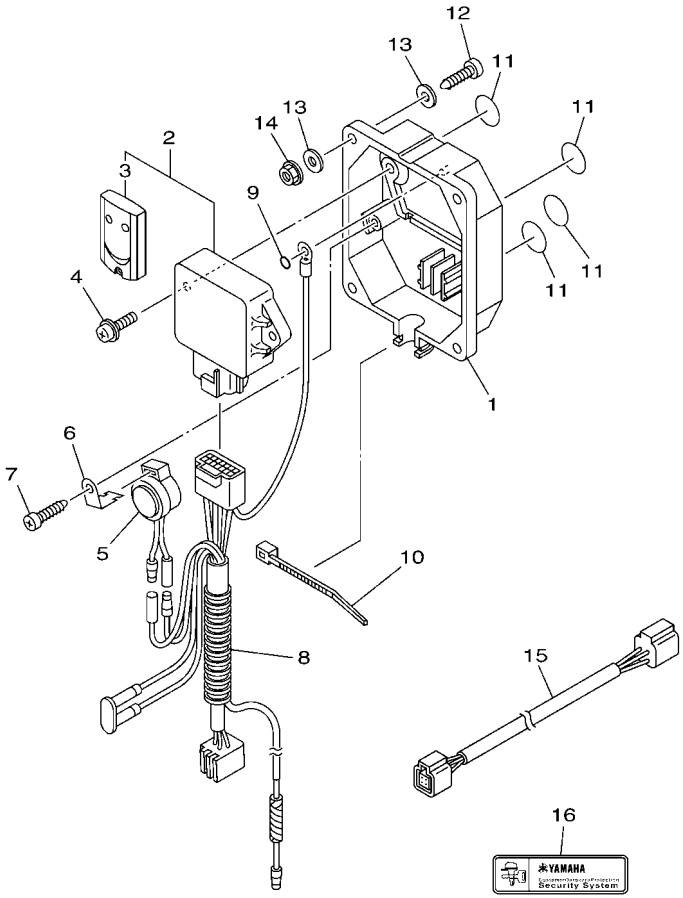

6CJ1100-K370

REF. NO.	PART NO. N° PIECES	DESCRIPTION DESCRIPTION	6HK8					REMARKS REMARQUES
1	6Y8–86267–00	CASE COMPLETE 1 CARTER (ENS.) 1	1					
2	6Y8–86260–03	REMOTE CONTROL UNIT ASSY UNITE DE TELECOMMANDE (ENS.)	1					
3	6AA–86261–01	.XMTR. COMP. .XMTR. COMP.	2					
4	97980–06216	SCREW, WITH WASHER VIS, AVEC RONDELLE	2					
5	6X4–83383–00	BUZZER RONFLEUR	1					
6	6X4–83386–00	STAY, BUZZER SUPPOR, RONFLEUR	1					
7	97780–60620	SCREW, TAPPING VIS, TETE BOMBEE	1					
8	6Y8–82509–10	WIRE, SUB LEAD FIL, SECONDAIRE	1					
9	93210–04279	O-RING JOINT TORIQUE	1					
10	90465–11M10	CLAMP BRIDE	1					
11	6Y8–8454G–00	PATCH 1 TAMPON 1	4					
12	90167–06M00	SCREW, TAPPING VIS, TETE FRAISEE	4					UR UR
	97880–06035	SCREW, PAN HEAD VIS, TETE TRONCONIQUE	4					UR UR
13	90201–06M30	WASHER, PLATE RONDELLE, PLATE	8					
14	95780–06300	NUT, FLANGE ECROU	4					
15	6Y8–82521–11	2FT PIGTAIL BUS FAISCEAU (L: 2FT.)	1					
16	6Y8–48277–00	STICKER 1 ETIQUETTE 1	4					

FIG. 38 OPTIONAL PARTS 6 — PIECES OPTIONNELLES 6

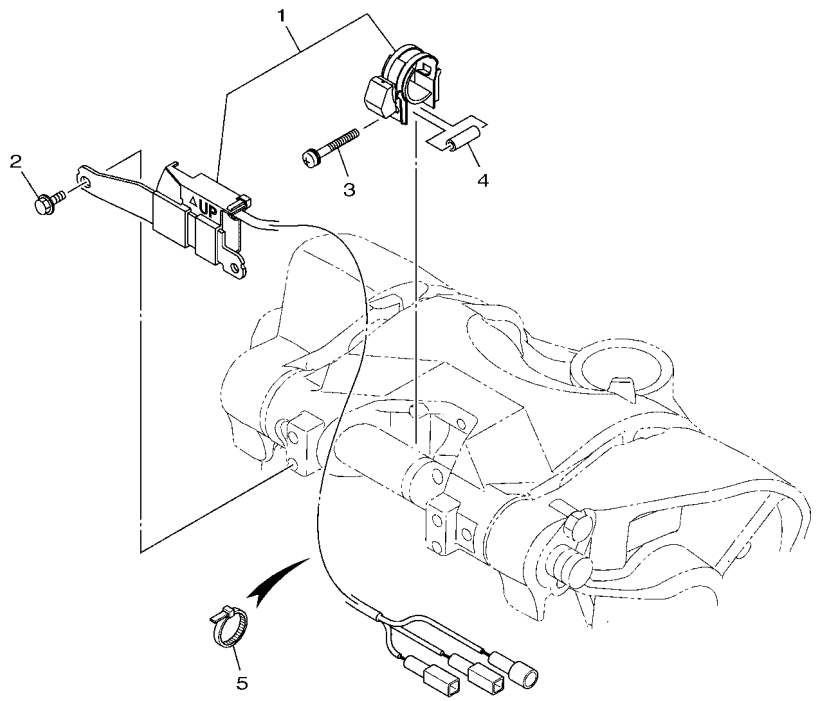

6EK3100-Q390

REF. NO.	PART NO. N° PIECES	DESCRIPTION DESCRIPTION	6HK8					REMARKS REMARQUES
1	63P–825E0–02	TILT LIMIT SWITCH ASSY COMMUTATEUR, LIMIT INCLINAISON	1					
2	97E95–06516	BOLT, HEXAGON W/W DEEP RECESS VIS HEXAGONAL AVC RONDELLE	2					
3	90159–05059	SCREW, WITH WASHER VIS, AVEC RONDELLE	1					
4	90387–05004	COLLAR COLLERETTE	1					
5	90465–11M10	CLAMP BRIDE	5					

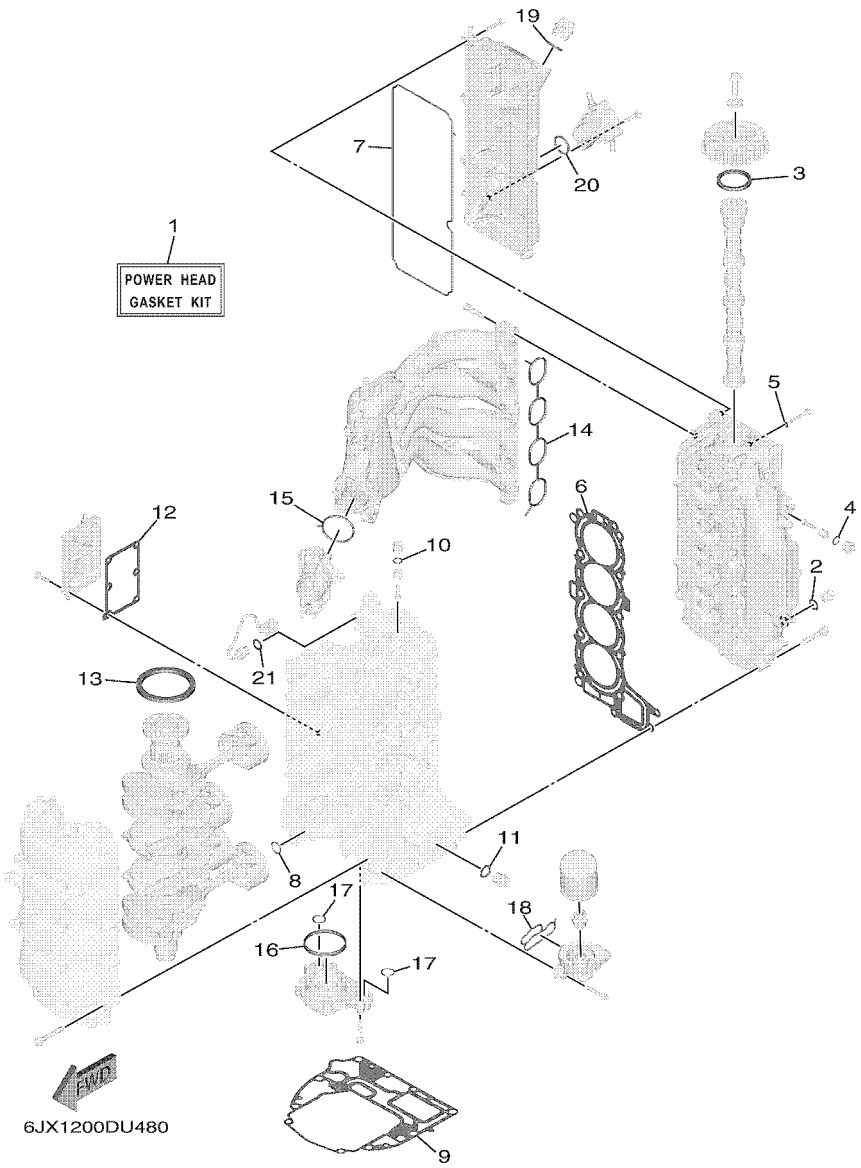

FIG. 39 REPAIR KIT 1 — KITS DE REPARATION 1

REF. NO.	PART NO. N° PIECES	DESCRIPTION DESCRIPTION	6HK8					REMARKS REMARQUES
1	6FP–W0001–01	POWER HEAD GASKET KIT POCHETTE DE JINTS TETE MOTRICE	1					
2	90430–14115	.GASKET .JOINT	1					
3	93102–48017	.OIL SEAL .JOINT SPY	1					
4	93210–13M63	.O-RING .JOINT TORIQUE	2					
5	90430–06014	.GASKET .JOINT	1					
6	6FP–11181–00	.GASKET, CYLINDER HEAD 1 .JOINT, DE CULASSE 1	1					
7	6FP–11193–00	.GASKET, HEAD COVER 1 .JOINT, COUVERCLE DE CULASSE 1	1					
8	93210–19MJ1	.O-RING .JOINT TORIQUE	1					
9	6EK–11351–01	.GASKET, CYLINDER .JOINT, D'EMBASE	1					
10	93210–13M63	.O-RING .JOINT TORIQUE	1					
11	90201–186F1	.WASHER, PLATE .RONDELLE, PLATE	1					
12	6FP–15353–00	.GASKET, DRAIN .JOINT, PLOT DE VIDANGE	1					
13	93102–85008	.OIL SEAL .JOINT SPY	1					
14	6FP–13645–00	.GASKET, MANIFOLD 1 .JOINT, TUBULURE 1	1					
15	6FP–13646–00	.GASKET, MANIFOLD 2 .JOINT, TUBULURE 2	1					
16	69J–11355–00	.SEAL, CYLINDER 1 .JOINT, SPY CYLINDRE	1					
17	93210–19MJ1	.O-RING .JOINT TORIQUE	2					
18	6FP–13475–00	.GASKET .JOINT	1					
19	93210–24M79	.O-RING .JOINT TORIQUE	1					
20	93210–30682	.O-RING .JOINT TORIQUE	1					
21	90430–14115	.GASKET .JOINT	1					

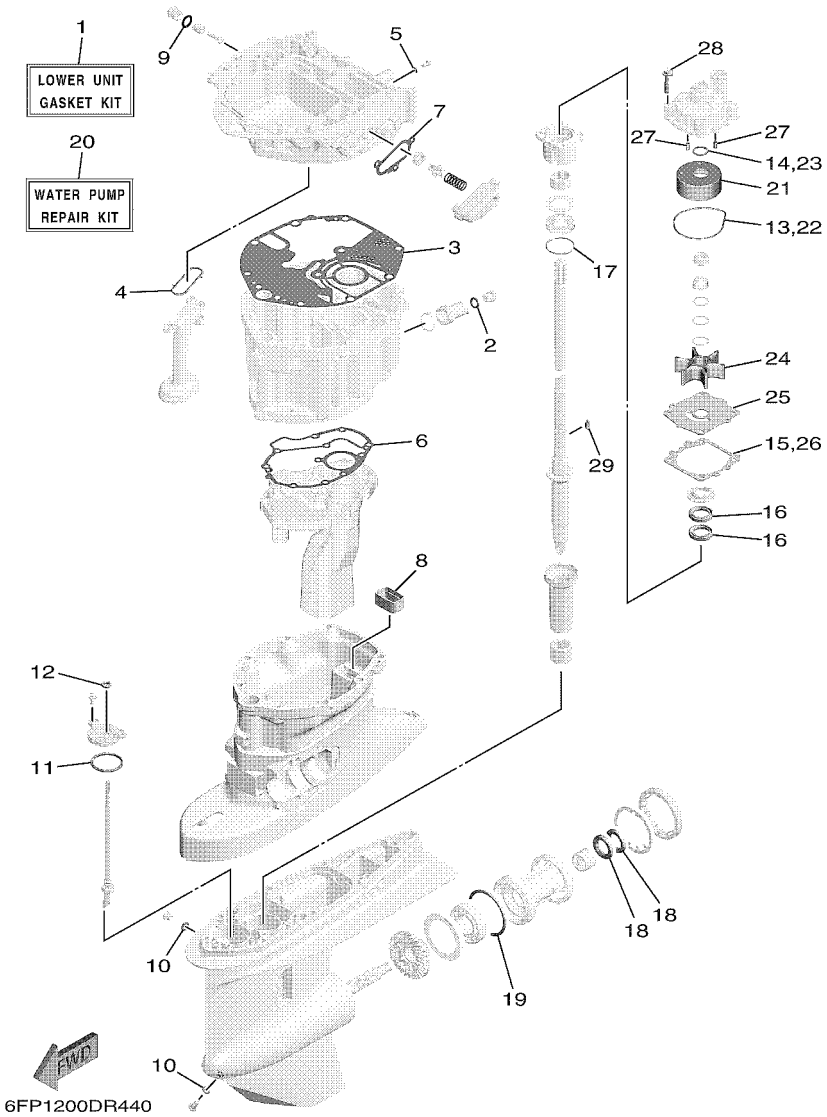

FIG. 40 REPAIR KIT 2 — KITS DE REPARATION 2

REF. NO.	PART NO. N° PIECES	DESCRIPTION DESCRIPTION	6HK8					REMARKS REMARQUES
1	6EK–W0001–21	LOWER UNIT GASKET KIT POCHETTE DE JOINTS EMBASE	1					
2	90430–14M09	.GASKET .JOINT	1					
3	6EK–15312–01	.GASKET, OIL PAN .JOINT DE VENTILATEUR D'HUILE	1					
4	67F–13415–00	.SEAL, OIL STRAINER .JOINT, FILTRE A HUILE	1					
5	90430–08143	.GASKET .JOINT	1					
6	6EK–41134–00	.GASKET, EXHAUST MANIFOLD .JOINT, PIPE D'ECHAPPEMENT	1					
7	6EK–12435–A0	.GASKET .JOINT	1					
8	67F–45127–00	.SEAL .JOINT	1					
9	93210–13M63	.O-RING .JOINT TORIQUE	1					
10	90430–08003	.GASKET .JOINT	2					
11	93210–58144	.O-RING .JOINT TORIQUE	1					
12	93106–09014	.OIL SEAL .JOINT SPY	1					
13	93210–86M38	.O-RING .JOINT TORIQUE	1					
14	93210–37160	.O-RING .JOINT TORIQUE	1					
15	6E5–44315–A0	.GASKET, WATER PUMP .JOINT, POMPE A EAU	1					
16	93101–28M16	.OIL SEAL .JOINT SPY	2					
17	93210–55M14	.O-RING .JOINT TORIQUE	1					
18	93101–30M17	.OIL SEAL .JOINT SPY	2					
19	93210–86M39	.O-RING .JOINT TORIQUE	1					
20	68V–W0078–01	WATER PUMP REPAIR KIT KIT DE REPARATION DE LA POMPE	1					
21	61A–44322–02	.INSERT, CARTRIDGE .CUVETTE	1					
22	93210–86M38	.O-RING .JOINT TORIQUE	1					
23	93210–37160	.O-RING .JOINT TORIQUE	1					
24	6E5–44352–01	.IMPELLER .TURBINE	1					
25	6EK–44323–00	.OUTER PLATE, CARTRIDGE .PLAQUE EXTERIEURE	1					
26	6E5–44315–A0	.GASKET, WATER PUMP .JOINT, POMPE A EAU	1					
27	93606–12019	.PIN, DOWEL .GOUPILLE	2					

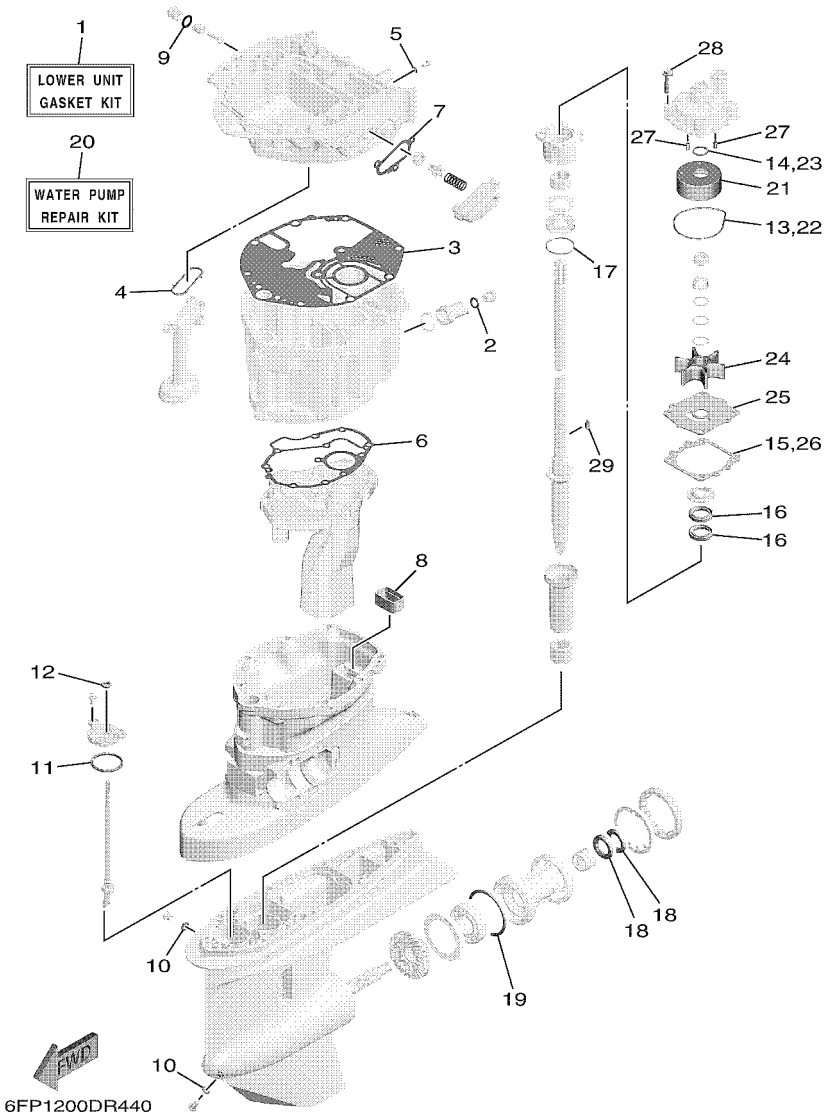

FIG. 40 REPAIR KIT 2 — KITS DE REPARATION 2

REF. NO.	PART NO. N° PIECES	DESCRIPTION DESCRIPTION	6HK8					REMARKS REMARQUES
28	90119–08191	.BOLT, WITH WASHER .BOULON, AVEC RONDELLE	4					
29	90280–04M05	.KEY, WOODRUFF .CLAVETTE, DEMI-LUNE	1					

NUMERICAL INDEX
INDEX NUMERIQUE

PART NO. N° PIECES	REF. NO.
6FP–11119–00	3 – 20
6DA–11133–10	5 – 3
6FP–11168–00	5 – 23
6FP–11181–00	5 – 17
	39 – 6
6FP–11191–00	5 – 22
6FP–11192–00	5 – 27
6FP–11193–00	5 – 25
	39 – 7
6G8–11197–A0	3 – 18
	5 – 13
	27 – 32
6EK–11313–00	3 – 3
6G8–11325–00	1 – 1
	1 – 4
	1 – 14
	3 – 16
	5 – 11
	27 – 30
63P–11325–01	1 – 2
	3 – 26
63P–11325–21	1 – 7
	10 – 8
6EK–11351–01	3 – 15
	39 – 9
69J–11355–00	28 – 14
	39 – 16
6EK–11410–01	4 – 1
6EK–11416–00	4 – 5
6EK–11416–10	4 – 5
6EK–11416–20	4 – 5
6EK–11416–30	4 – 5
6EK–11416–40	4 – 5
6EK–11417–00	4 – 6
6EK–11417–10	4 – 6
6EK–11417–20	4 – 6
6EK–11417–30	4 – 6
6EK–11417–40	4 – 6
6EK–11426–01	4 – 7
6EK–11427–00	4 – 8
6CB–11478–00	4 – 2
6FP–11537–00	6 – 22
6DA–11557–00	6 – 23
6EK–11603–01	4 – 12
6EK–11604–01	4 – 12
6FP–11631–01	4 – 11
6EK–11633–00	4 – 13
6FP–11635–01	4 – 11

PART NO. N° PIECES	REF. NO.
6EK–11656–00	4 – 15
6EK–11656–10	4 – 15
6EK–11656–20	4 – 15
6EK–11656–30	4 – 15
6EK–11656–40	4 – 15
6FP–12111–00	6 – 1
6FP–12113–00	6 – 4
62Y–12116–00	6 – 3
30X–12117–00	6 – 5
30X–12118–00	6 – 6
51Y–12119–00	6 – 7
6FP–12121–00	6 – 2
6FP–12146–00	6 – 8
6FP–12151–00	6 – 9
6C5–12158–00	6 – 11
6C5–12158–10	6 – 14
	6 – 30
6C5–12159–00	6 – 10
6C5–12159–10	6 – 13
	6 – 29
6FP–12161–00	6 – 12
6FP–12162–10	6 – 28
6FP–12171–00	6 – 20
6FP–12231–00	6 – 15
6FP–12233–00	6 – 16
6FP–12411–00	1 – 5
	3 – 9
6EK–12412–00	3 – 10
6EK–12413–00	3 – 11
6G5–12416–00	27 – 21
6EK–12435–A0	27 – 25
	40 – 7
6EK–1243A–00	3 – 13
6EK–1246A–00–9S	27 – 24
6FP–12483–00	3 – 30
6FP–12484–00	3 – 31
6FP–12485–00	3 – 35
6AW–12572–00	21 – 5
6R3–12581–00	21 – 7
6R3–12582–00	21 – 8
6R3–12583–00	21 – 9
6AW–13119–00	28 – 12
68V–13131–00	12 – 17
6FP–13132–00	10 – 21
6FP–13161–00	9 – 1
6EK–13300–00	28 – 10
6EK–13329–00	28 – 11
6FP–13371–00	7 – 19

PART NO. N° PIECES	REF. NO.
6FP–13381–00	7 – 10
67F–13411–00	28 – 7
67F–13415–00	28 – 9
	40 – 4
6CJ–13428–00	5 – 29
6EK–13437–62	13 – 16
5GH–13440–71	1 – 3
	3 – 38
6FP–13446–00	3 – 40
6CB–13473–00	3 – 37
6FP–13475–00	3 – 41
	39 – 18
6FP–13476–00	7 – 9
6EK–13490–00	3 – 36
6FP–13545–00	11 – 6
6AW–13545–10	8 – 13
6FP–13546–00	8 – 15
	11 – 7
6FP–13547–00	8 – 16
6FP–13548–00	8 – 17
6FP–13577–00	9 – 4
6FP–13593–01	10 – 23
69J–13631–00	28 – 13
6FP–13641–00	7 – 1
6FP–13645–00	7 – 2
	39 – 14
6FP–13646–00	7 – 3
	39 – 15
6C5–13713–02	7 – 8
6FP–13716–00	10 – 22
6FP–13751–01	7 – 4
6FP–13761–01	9 – 2
6C5–13781–00	10 – 20
6FP–13906–00	10 – 18
6FP–13907–01	10 – 12
6FP–13910–01	10 – 11
6FP–13915–00	1 – 8
	10 – 16
6FP–13927–00	10 – 17
6FP–13938–00	10 – 14
6FP–13972–00	11 – 3
6FP–13974–01	11 – 1
6C5–1410B–00	9 – 3
6C5–14127–10	10 – 15
6BG–14137–00	10 – 13
6X4–14137–00	33 – 25
6BG–14149–00	11 – 12
6FP–14180–03	10 – 1

PART NO. N° PIECES	REF. NO.
6FP–14182–01	10 – 10
6C5–14191–00	10 – 6
6C5–14397–00	10 – 7
6FP–14435–00	7 – 20
6FP–14440–02	7 – 23
6C5–14496–00	7 – 14
6C5–14567–00	10 – 25
6FP–14591–00	10 – 5
6FP–14711–00–CA	27 – 10
6FP–1475A–00	8 – 5
6FP–1475F–00	8 – 20
6FP–1475G–00	8 – 22
6FP–14960–00	10 – 2
6FP–14984–00	1 – 9
	10 – 24
6EK–14989–00	8 – 21
6FP–15109–10–9S	3 – 2
6EK–15311–01	28 – 1
6EK–15312–01	28 – 6
	40 – 3
6EK–15316–00	28 – 18
6FP–15353–00	3 – 28
	39 – 12
6FP–15362–00	28 – 17
6G8–15363–00	5 – 31
6FP–15373–00	7 – 22
6FP–15414–00–9S	3 – 25
6FP–21337–00	11 – 13
6FP–2134X–00	8 – 8
6HK–2153A–00	2 – 20
6HK–2153B–00	2 – 21
63D–21744–00	8 – 19
6E5–21744–00	8 – 18
6EK–22434–00	25 – 23
6EK–22471–01	25 – 18
68V–24149–00	12 – 25
6FP–2416A–00	8 – 4
69J–24170–00	8 – 7
6FP–2419E–01	8 – 9
6YK–24201–44	31 – 1
6C5–24251–01	1 – 10
	11 – 4
6FP–24311–00	12 – 13
6FP–24314–00	12 – 3
6FP–24324–00	11 – 10
6FP–24325–00	11 – 11
6FP–24330–00	11 – 2
6E5–24351–51	12 – 4

PART NO. N° PIECES	REF. NO.
6YK–24360–73	31 – 3
68V–24374–00	12 – 20
6AW–24377–01	12 – 2
688–24378–00	3 – 33
	8 – 14
6FP–24379–00	11 – 8
6BG–24387–00	11 – 5
6FP–24410–00	12 – 14
68V–24411–00	12 – 19
68V–24412–00	12 – 15
6FP–24413–00	12 – 21
6FP–24414–00	12 – 23
6FP–24422–00	9 – 6
63P–24423–00	12 – 18
68V–24444–00	12 – 24
6FP–24444–00	10 – 9
6FP–24452–00	10 – 3
68V–24454–00	12 – 16
6FP–24462–00	10 – 4
6D8–24469–00	12 – 9
68V–24471–10	12 – 22
6D8–24519–00	12 – 10
6EK–24560–00	12 – 5
6D8–24562–00	12 – 8
6D8–24563–00	1 – 11
	12 – 6
6D8–24564–00	1 – 12
	12 – 7
6FP–24568–01	12 – 12
6YL–24610–10	31 – 2
6FP–26301–00	33 – 39
6X4–26367–01	33 – 34
	33 – 41
67F–28100–03	12 – 29
6CB–2812A–00	14 – 15
6HK–28199–75–D0	12 – 30
6HK–28199–75–E0	12 – 30
6HK–28199–75–F0	12 – 30
6HK–28199–75–G0	12 – 30
6HK–28199–75–H0	12 – 30
6HK–28199–75–S0	12 – 30
6HK–28199–85–K0	12 – 31
6HK–28199–85–L0	12 – 31
6HK–28199–85–M0	12 – 31
6HK–28199–85–N0	12 – 31
6HK–28199–85–P0	12 – 31
6HK–28199–85–R0	12 – 31
6EK–41134–00	27 – 9

PART NO. N° PIECES	REF. NO.
6EK–41134–00	40 – 6
6EK–41137–01	27 – 1
6FP–41211–00	22 – 40
6FP–41213–00	22 – 36
682–41237–00	22 – 42
6X4–41291–00	33 – 7
6FP–41662–00	22 – 32
6X4–42111–02–8D	33 – 1
6X4–42115–00	33 – 21
6X4–42119–01	33 – 4
6EK–42121–00	35 – 3
63D–42121–22–8D	33 – 54
63D–42126–00	33 – 16
6X4–42128–00	33 – 12
6X4–42131–11	33 – 51
6X4–42137–00	33 – 6
6FP–42154–00	22 – 30
6X4–42159–00	33 – 45
68V–42171–00	22 – 31
6X4–42177–01	33 – 5
6BG–42384–00	21 – 2
67G–42508–12	36 – 1
6EK–42510–00–8D	24 – 6
6EK–42510–10–8D	24 – 6
6X4–42526–00	36 – 11
63D–42527–00	36 – 6
63D–42528–00	36 – 16
67G–42541–00	36 – 4
6EK–42541–00	21 – 10
67G–42541–10	36 – 7
6FP–42542–00	9 – 11
67G–42546–00	36 – 5
67G–42561–00	36 – 14
67G–42562–00	36 – 15
6HK–42610–10–NA	2 – 1
6FP–42615–02	2 – 14
6HK–4261A–10–NA	2 – 2
6EK–42646–00	2 – 4
6FP–42647–00	2 – 5
663–42662–01	2 – 13
68F–42663–01	2 – 12
6HK–42675–10	2 – 18
6HK–42676–10	2 – 19
6HK–42678–10	2 – 17
6FN–42683–00	2 – 22
6FN–42684–00	2 – 23
6DA–42697–00	2 – 15
6EH–42697–00	2 – 16

NUMERICAL INDEX
INDEX NUMERIQUE

PART NO. N° PIECES	REF. NO.
6FP–42710–01–8D	20 – 1
648–42715–00	22 – 26
6EK–42716–01	20 – 24
67F–42717–00	20 – 22
6X4–42725–01	33 – 53
6EK–42725–10	20 – 16
6AH–42726–01	21 – 11
6H1–42726–31	21 – 1
6EK–42727–01	27 – 6
6X4–42727–01	34 – 18
6EK–42728–01	20 – 15
6X4–42728–10	33 – 63
6FP–42741–00–8D	21 – 18
6H4–42748–01	20 – 21
68F–42753–00	20 – 18
6CB–42761–00	20 – 19
6EK–42769–01	27 – 19
6N9–42791–41	27 – 12
6N9–42792–41	27 – 13
6EE–42794–40	20 – 27
6EE–42794–50	20 – 28
6FP–42815–00–8D	20 – 5
6FP–42816–00–8D	20 – 6
6CB–42818–00	20 – 10
6X4–42821–00	33 – 29
6EK–43111–00–8D	23 – 1
6EK–43112–00–8D	23 – 2
6EK–43126–00	23 – 27
64E–43131–30	23 – 9
64E–43139–11	24 – 3
66T–43144–00	20 – 13
	23 – 21
6E5–43145–01	32 – 7
6G5–43148–00	23 – 18
6EK–43181–00	23 – 15
6EK–43185–00	23 – 16
6EK–43311–00–8D	23 – 5
6EK–43311–10–8D	23 – 5
682–43318–01	36 – 8
6FP–43800–02	25 – 1
6EK–43800–04	25 – 1
6EK–43804–11	26 – 3
6EK–43805–01	26 – 2
6EK–4380F–00	26 – 6
6C5–4380G–00	25 – 33
6FP–4380K–02	25 – 29
6EK–4380K–04	25 – 29
6EK–4380P–00	25 – 10

PART NO. N° PIECES	REF. NO.
6EK–4380R–00	25 – 7
6EK–43810–00	25 – 2
6EK–43811–00	25 – 9
6H1–43812–00	25 – 3
6C5–43816–00	25 – 32
6C6–43817–00	25 – 30
6EK–43818–00	23 – 31
6EK–4381B–00	25 – 20
6EK–43821–00	25 – 4
6EK–43829–00	25 – 26
6EK–4382E–00	25 – 39
6D8–4382L–00	25 – 62
6EK–43830–00	25 – 35
6FP–43830–00	25 – 35
6EK–43831–00	25 – 63
6H1–43834–10	23 – 32
6D8–43841–00	25 – 55
6D8–43843–00	25 – 50
6D8–43844–00	25 – 48
6H1–43844–10	25 – 59
6EK–43845–00	25 – 66
69A–4384F–00	25 – 56
6H1–4384G–11	25 – 58
62X–4384H–00	25 – 22
	25 – 28
6D8–4384M–00	25 – 37
6D8–43851–00	25 – 45
6C6–43853–00	25 – 41
6C5–43854–00	25 – 52
6C5–43855–10	25 – 46
6EK–43856–00	25 – 49
6D8–43861–00	25 – 6
	25 – 8
6EK–43861–00	25 – 5
6H1–43862–00	25 – 11
	25 – 15
6EK–43862–01	26 – 12
6D8–43863–00	25 – 64
67F–43865–00	25 – 14
62X–4386K–00	26 – 7
6EK–43875–00	25 – 19
6H1–43875–00	25 – 65
63P–43879–10	26 – 8
6C6–4387G–00	25 – 42
6EK–43880–13	25 – 68
	26 – 1
6EK–43881–13	26 – 10
6EK–43882–00	26 – 11

PART NO. N° PIECES	REF. NO.
6H1–43883–00	25 – 38
6EK–43892–00	26 – 4
6C5–43895–00	25 – 51
6EK–43899–00	25 – 21
69J–4389J–00	25 – 31
	25 – 36
6X4–44100–01	33 – 20
6X4–44102–00	33 – 22
6X4–44114–00	34 – 16
6EK–44117–01	22 – 8
6EK–44118–00	22 – 22
6EK–44120–01	22 – 17
6EK–44120–11	22 – 17
6EK–44121–00	22 – 15
63P–44122–00	22 – 12
6X4–44132–00	33 – 24
6EK–44135–00	22 – 37
6X4–44139–01	33 – 8
6E5–44150–03	29 – 20
6X4–44159–A0–8D	33 – 46
6X4–44173–00	33 – 47
6X4–44177–00	33 – 11
6X4–44188–00	33 – 14
6X3–44191–00	33 – 49
61A–44311–01	29 – 26
6E5–44312–00	29 – 31
6E5–44315–A0	29 – 35
	40 – 15
	40 – 26
61A–44322–02	29 – 27
	40 – 21
6EK–44323–00	29 – 34
	40 – 25
6E5–44352–01	29 – 32
	40 – 24
6E5–44365–01	29 – 30
6EK–44365–01	30 – 3
6E5–44366–01	30 – 1
6EK–44379–00	30 – 4
6P2–44391–00	21 – 4
	21 – 13
6FP–44514–00	24 – 23
6EK–44526–00	24 – 26
6EK–44536–00	23 – 38
6EK–44551–00–8D	24 – 12
6EK–44553–00–8D	24 – 21
63P–44555–00	24 – 15
61A–44575–01	24 – 14

PART NO. N° PIECES	REF. NO.
6EK–45111–00–8D	27 – 11
6EK–45111–10–8D	27 – 11
67F–45127–00	27 – 27
	40 – 8
6EK–45135–00	27 – 28
6C5–45155–02	27 – 20
6EK–45181–01	27 – 10
688–45214–02	30 – 8
688–45215–02	30 – 9
6H1–45251–03	1 – 13
	23 – 36
6HK–45300–03–NA	29 – 1
6HK–45300–13–NA	29 – 1
6E5–45301–07–NA	29 – 2
6EK–45318–00	27 – 29
6E5–45321–00	29 – 16
6E5–45331–00–9S	29 – 38
6E5–45332–00–CA	29 – 60
688–45341–10	29 – 7
6E5–45344–00	29 – 44
6E5–45371–01	1 – 17
	30 – 12
688–45375–00	29 – 11
663–45376–00	29 – 10
6E5–45378–00	29 – 12
688–45383–02	29 – 70
688–45384–02	29 – 71
6EK–45501–00	29 – 46
6EK–45501–10	29 – 46
61A–45527–00	29 – 25
6E5–45536–00	29 – 9
61A–45538–00	29 – 22
6HK–45551–00	29 – 47
6HK–45560–00	29 – 49
6E5–45567–01	29 – 5
6E5–45567–10	29 – 5
6E5–45567–20	29 – 5
6E5–45567–30	29 – 5
6E5–45567–40	29 – 5
6E5–45567–50	29 – 5
6E5–45567–60	29 – 5
6HK–45571–00	29 – 62
6E5–45576–00	29 – 63
6L6–45577–00	29 – 67
6L6–45577–10	29 – 67
6L6–45577–20	29 – 67
6L6–45577–30	29 – 67
6L6–45577–40	29 – 67

PART NO. N° PIECES	REF. NO.
6L6–45577–50	29 – 67
6L6–45577–60	29 – 67
6E5–45587–01	29 – 41
6E5–45587–10	29 – 41
6E5–45587–20	29 – 41
6E5–45587–30	29 – 41
6E5–45587–40	29 – 41
6E5–45587–50	29 – 41
6E5–45587–60	29 – 41
6E5–45611–01	29 – 51
68V–45631–02	29 – 58
6E5–45633–01	29 – 59
6E5–45634–02	29 – 52
63P–45987–00	30 – 14
688–45997–01	30 – 15
6X4–47731–01	33 – 23
703–48129–00	33 – 28
6X4–48154–00	33 – 17
6X4–48215–00	33 – 3
6X4–48261–00	33 – 26
6Y8–48277–00	37 – 16
6EK–48321–00	33 – 32
6E5–48344–00	22 – 6
	22 – 28
6EK–48531–01	22 – 1
6FP–48532–00	22 – 2
63D–48538–00	33 – 37
	33 – 43
6EK–48538–00	22 – 4
6X4–48538–00	33 – 33
6X4–48538–10	33 – 40
6EK–61350–00	32 – 1
6E5–61355–00	32 – 2
6C5–81146–10	7 – 15
6FP–81337–11	13 – 11
6FP–81410–10	13 – 3
6EM–81800–02	19 – 1
69J–81801–11	19 – 5
6CB–81807–00	19 – 8
6CB–81809–00	19 – 14
67F–81810–00	19 – 3
67F–81813–00	19 – 6
6CB–81820–00	19 – 7
67F–81821–00	19 – 11
6FP–81822–10	16 – 4
6CB–81826–00	19 – 22
69J–81828–00	19 – 23
67F–81830–00	19 – 16

PART NO. N° PIECES	REF. NO.
6CB–81832–00	19 – 9
6CB–81836–00	19 – 10
6C5–81839–00	19 – 19
67F–8183R–00	19 – 13
60V–8183T–00	19 – 17
69J–81840–11	19 – 4
67F–81841–00	19 – 12
6CB–81842–00	19 – 18
67F–81846–00	19 – 24
67F–81850–00	19 – 2
6X4–81860–00	34 – 21
6C5–81869–00	19 – 21
67F–81891–00	19 – 15
6FP–81919–01	14 – 20
60V–81925–00	16 – 2
6EM–81941–01	19 – 20
6FP–81948–10	14 – 3
63P–81950–00	17 – 1
6FP–81952–00	17 – 5
6EK–81960–10	15 – 15
6FP–81975–00	15 – 16
6FM–81980–01	18 – 6
6EE–81994–40	13 – 17
6EE–81994–50	13 – 18
6AH–81996–00	20 – 29
68V–82105–02	16 – 9
6P2–82113–00	14 – 16
682–82119–01	17 – 2
6D8–82148–00	23 – 24
6E5–82148–00	23 – 3
66K–82149–00	23 – 8
68V–82149–30	23 – 8
6FP–82151–01	14 – 11
6CB–82151–20	14 – 12
6CB–82151–30	14 – 13
6FP–82170–02	14 – 10
6EK–82181–00	26 – 5
6FP–82310–00	15 – 1
6FP–82310–10	15 – 2
6FP–82316–00	15 – 11
6A0–82317–01	13 – 13
	15 – 13
67F–82361–00	15 – 6
	15 – 7
6FP–82370–00	15 – 4
68V–82504–00	18 – 11
6Y8–82509–10	37 – 8
6X4–82510–42	34 – 1

NUMERICAL INDEX
INDEX NUMERIQUE

PART NO. N° PIECES	REF. NO.
6Y8–82521–11	37 – 15
703–82532–00	34 – 3
6FP–8253C–00	14 – 2
6X4–82540–00	33 – 27
682–82556–00	34 – 6
6FM–82563–01	18 – 15
6X4–82563–01	34 – 8
69W–82575–00	34 – 5
676–82577–01	34 – 2
6C5–8257V–00	14 – 8
689–8257Y–00	34 – 7
68F–82582–00	16 – 3
6DA–82582–00	18 – 3
6DA–82582–10	18 – 4
6Y8–82582–11	18 – 2
6X4–82586–11	34 – 10
61A–82588–01	22 – 9
6FP–82590–12	18 – 1
68V–82594–00	20 – 23
60V–8259F–01	22 – 27
63P–825E0–02	38 – 1
6X4–83383–00	34 – 11
	37 – 5
6X4–83386–00	34 – 12
	37 – 6
6E5–83558–00	21 – 16
6E5–83558–10	29 – 14
6FM–83589–00	34 – 19
6FP–83626–01	13 – 15
6X4–83653–20	34 – 14
67H–83672–02	24 – 1
68F–83688–10	7 – 11
6C5–84301–10	34 – 15
6Y8–8454G–00	37 – 11
68F–85119–00	14 – 6
	17 – 8
6X4–85415–00	34 – 20
68F–85516–01	17 – 6
69L–85516–01	10 – 27
6FP–85544–00	14 – 14
689–85547–01	12 – 1
6JX–85548–00	18 – 12
68V–85548–01	14 – 18
6FP–85561–00	13 – 5
60V–85564–00	14 – 4
6CB–85580–00	13 – 4
6CJ–85780–01	18 – 17
6CJ–85790–00	18 – 9

PART NO. N° PIECES	REF. NO.
8GL–85885–01	7 – 6
6HK–8591A–02	14 – 1
6FP–86112–00	8 – 3
6C5–86120–00	8 – 1
6Y8–86260–03	37 – 2
6AA–86261–01	37 – 3
6Y8–86267–00	37 – 1
6FP–87226–00	10 – 19
K1C–A3275–00	4 – 10
7BB–G3861–00	25 – 17
6FP–W0001–01	39 – 1
6EK–W0001–21	40 – 1
68V–W0078–01	1 – 18
	40 – 20
6FP–W009A–10–9S	5 – 1
6FP–W009B–11–9S	3 – 1
6FP–W1111–00–9S	5 – 2
6EK–W1165–00	4 – 9
6FP–W4624–00	6 – 27
6FP–W8145–01	13 – 1
6FP–W9010–00	13 – 2
90101–12014	33 – 55
90101–12065	23 – 41
90105–06037	3 – 29
90105–06039	2 – 6
90105–06151	3 – 42
	28 – 15
90105–06208	12 – 28
90105–06M14	16 – 10
90105–08170	3 – 7
90105–08175	5 – 21
90105–08220	5 – 20
90105–08248	16 – 7
90105–10M00	30 – 13
90105–14007	24 – 25
90105–14013	24 – 18
90109–05M89	13 – 6
90109–06286	3 – 12
90109–06288	22 – 35
	22 – 38
90109–06292	28 – 8
90109–06316	20 – 20
90109–06M65	5 – 15
90109–06M81	22 – 3
90109–06M86	20 – 14
90111–08078	2 – 7
90116–10063	35 – 1
90119–06276	23 – 37

PART NO. N° PIECES	REF. NO.
90119–06286	29 – 19
90119–06291	9 – 9
90119–06294	15 – 12
90119–06296	9 – 5
90119–06307	7 – 27
90119–06309	7 – 12
	8 – 12
90119–06MA4	15 – 17
90119–08020	7 – 18
90119–08187	20 – 2
90119–08191	29 – 37
	40 – 28
90119–08193	36 – 2
90119–10007	27 – 15
90119–10054	23 – 35
90119–10057	3 – 6
90119–10058	24 – 22
90119–10071	30 – 7
90149–05041	7 – 7
90149–10072	5 – 19
90151–06M02	3 – 27
90152–05007	33 – 9
90152–05M07	30 – 10
90159–05059	24 – 4
	38 – 3
90159–06053	21 – 23
90159–06M28	21 – 20
90167–06M00	37 – 12
90170–09M03	32 – 3
90170–16M01	29 – 48
90171–18M04	30 – 17
90176–14002	24 – 19
	24 – 28
90179–06M28	9 – 10
90179–08003	16 – 1
90183–061A8	21 – 22
90185–05002	30 – 11
90185–08057	36 – 13
90185–09M01	32 – 5
90185–10027	35 – 2
90185–10M14	36 – 9
90185–12M12	33 – 62
90185–22M11	23 – 12
90201–06M05	22 – 34
	22 – 39
90201–06M30	37 – 13
90201–08M01	36 – 3
90201–10060	23 – 34

PART NO. N° PIECES	REF. NO.
90201–10081	32 – 9
90201–10144	6 – 26
90201–10M20	32 – 6
90201–10M76	36 – 10
90201–11008	22 – 20
90201–12035	33 – 59
90201–12426	23 – 43
90201–13M01	23 – 42
90201–156J2	20 – 8
90201–16M55	24 – 17
90201–186F1	3 – 24
	39 – 11
90201–21016	6 – 17
90201–22M01	29 – 23
90201–26M59	23 – 11
90201–30M92	29 – 68
90201–38M60	24 – 8
90202–08M20	22 – 13
90202–32M19	24 – 16
90202–40M47	24 – 11
90206–12M22	33 – 57
90206–15M18	20 – 9
90206–22M19	29 – 24
90249–06M19	23 – 20
90250–08M07	29 – 57
90280–04M05	29 – 33
	40 – 29
90282–04010	29 – 69
90338–08174	24 – 7
90340–08002	29 – 6
90340–14M06	5 – 9
	28 – 3
90340–18M09	3 – 23
90340–27001	5 – 8
90340–97002	5 – 6
90340–99001	5 – 4
90383–20001	23 – 33
90386–06M12	22 – 16
90386–08001	7 – 25
90386–08032	33 – 15
90386–10001	22 – 19
90386–10M16	23 – 17
90386–12003	33 – 60
90386–15M73	20 – 7
90386–18001	23 – 29
90386–18M35	23 – 28
90386–25M31	23 – 10
90386–26MA3	33 – 50

PART NO. N° PIECES	REF. NO.
90386–38M32	24 – 10
90387–05004	38 – 4
90387–06119	13 – 12
	15 – 14
90387–06176	14 – 5
	17 – 7
90387–06289	7 – 13
	8 – 11
90387–06M03	10 – 26
90387–06M43	21 – 24
90387–07013	7 – 26
90387–07046	2 – 3
90387–08M37	20 – 4
90387–08M45	2 – 10
90387–10094	2 – 8
90387–10M42	32 – 4
90387–12M02	33 – 58
90401–10050	6 – 18
90401–20007	3 – 39
90430–06014	5 – 16
	39 – 5
90430–08003	1 – 16
	29 – 8
	40 – 10
90430–08143	27 – 3
	40 – 5
90430–14115	5 – 10
	18 – 10
	39 – 2
	39 – 21
90430–14M09	1 – 15
	28 – 4
	40 – 2
90440–16001	30 – 2
90440–16002	30 – 2
90445–073F9	21 – 14
90445–07ME8	29 – 13
90445–07ME9	29 – 13
90464–05141	17 – 14
90464–07259	21 – 15
90464–07M05	15 – 8
90464–08M07	34 – 4
90464–09013	9 – 15
	15 – 10
90464–09021	9 – 14
90464–09M42	33 – 35
90464–09M47	7 – 29
	18 – 5

PART NO. N° PIECES	REF. NO.
90464–10011	9 – 13
90464–11121	17 – 13
90464–12002	15 – 9
90464–12010	11 – 16
90464–12183	7 – 16
	14 – 7
	17 – 10
	17 – 11
90464–13227	3 – 43
	18 – 7
	18 – 22
90464–13249	13 – 10
	18 – 14
	18 – 19
	20 – 26
90464–15007	11 – 15
90464–16001	18 – 16
	18 – 20
	18 – 21
90464–17006	7 – 17
90464–20181	18 – 18
90464–20258	20 – 17
90464–26001	7 – 28
	7 – 30
90464–65001	7 – 24
90465–08M63	23 – 7
90465–08M83	3 – 32
90465–11M10	3 – 22
	3 – 34
	8 – 23
	9 – 12
	11 – 9
	12 – 11
	12 – 27
	13 – 7
	21 – 3
	21 – 12
	21 – 17
	23 – 14
	24 – 5
	29 – 15
	37 – 10
	38 – 5
90465–11M59	3 – 14
	28 – 19
90465–13M11	17 – 12
90465–13M18	23 – 26
90465–13M24	35 – 4

NUMERICAL INDEX
INDEX NUMERIQUE

PART NO. N° PIECES	REF. NO.
90465–13M97	18 – 23
90467–08M18	9 – 16
	11 – 14
90467–09M17	8 – 24
90468–10005	33 – 38
	33 – 44
90468–18008	22 – 7
	22 – 14
	22 – 29
90468–180A0	22 – 21
90480–10M23	8 – 10
90480–11006	9 – 8
90480–12314	5 – 28
90480–13M24	21 – 21
90480–20M05	27 – 23
90480–22M15	20 – 3
90480–25161	15 – 3
90501–12082	22 – 25
90501–16M37	29 – 53
90501–200A2	27 – 22
90501–23215	33 – 13
90506–14M24	23 – 23
90506–22001	20 – 12
91312–06035	13 – 9
91318–03005	25 – 61
91318–03025	25 – 60
91318–05030	25 – 53
91318–05045	25 – 34
91380–06025	25 – 67
91490–20010	33 – 10
	33 – 19
91490–40030	30 – 18
91609–16012	25 – 12
91690–30010	22 – 5
91690–30020	23 – 19
91690–50014	7 – 21
92903–08100	16 – 12
92990–08600	2 – 9
92990–10200	6 – 19
92990–12200	33 – 56
92990–12600	33 – 61
92990–18200	30 – 16
92995–14600	24 – 20
	24 – 27
93101–28M16	29 – 39
	40 – 16
93101–30M17	29 – 65
	40 – 18

PART NO. N° PIECES	REF. NO.
93102–48017	6 – 31
	39 – 3
93102–85008	4 – 4
	39 – 13
93106–09014	29 – 18
	40 – 12
93210–04279	37 – 9
93210–04N51	25 – 43
93210–064A5	25 – 44
93210–09165	22 – 18
	25 – 25
93210–13M63	3 – 19
	5 – 14
	20 – 25
	27 – 33
	39 – 4
	39 – 10
	40 – 9
93210–14579	5 – 5
93210–16275	32 – 8
93210–17014	7 – 5
93210–18322	5 – 7
93210–19MJ1	3 – 8
	28 – 16
	39 – 8
	39 – 17
93210–207A0	3 – 4
93210–24M79	5 – 32
	39 – 19
93210–30682	12 – 26
	39 – 20
93210–37160	29 – 29
	40 – 14
	40 – 23
93210–37MH7	24 – 9
93210–55M14	29 – 43
	40 – 17
93210–58144	29 – 17
	40 – 11
93210–68N50	25 – 27
93210–86M38	29 – 28
	40 – 13
	40 – 22
93210–86M39	29 – 66
	40 – 19
93306–208U0	29 – 61
93315–425U7	29 – 50
93315–430U8	29 – 64

PART NO. N° PIECES	REF. NO.
93315–628U9	29 – 3
93317–330U2	29 – 40
93332–000U7	29 – 4
93341–930V2	29 – 42
93410–18M05	23 – 30
93410–37M04	24 – 13
93450–19052	4 – 14
93501–04M02	22 – 24
93501–08001	25 – 47
93503–16003	25 – 16
	29 – 56
93505–32038	25 – 13
	25 – 40
93507–32009	29 – 54
93511–32017	29 – 55
93604–26256	25 – 54
93605–17002	6 – 21
93606–12019	3 – 5
	4 – 3
	27 – 8
	27 – 18
	28 – 5
	29 – 36
	40 – 27
93608–12M05	27 – 5
	30 – 5
93700–06002	23 – 6
	33 – 2
94702–00440	1 – 6
	5 – 33
95333–08600	16 – 11
95380–05600	22 – 41
95380–06600	8 – 2
	21 – 19
	33 – 18
95380–12600	23 – 44
95780–06300	37 – 14
95780–08300	2 – 11
95812–08050	16 – 5
95817–08040	16 – 6
95817–10035	6 – 25
95D75–06040	22 – 11
95D75–10060	24 – 24
95D95–06010	23 – 40
95D95–06012	6 – 24
95D95–06014	9 – 7
95D95–06016	17 – 9
	18 – 13

PART NO. N° PIECES	REF. NO.
95D95–06025	22 – 33
	27 – 26
95D95–06030	5 – 26
	13 – 8
	13 – 14
	22 – 23
	27 – 7
95D95–08012	20 – 11
95D95–08020	3 – 21
97602–04316	26 – 9
97607–04208	5 – 24
97780–50620	14 – 17
97780–60520	21 – 6
97780–60620	14 – 9
	14 – 19
	34 – 17
	37 – 7
97780–60920	33 – 48
97880–06035	37 – 12
97885–06008	23 – 4
97980–06216	34 – 9
	37 – 4
97985–04116	22 – 10
97985–04308	16 – 8
97985–06216	24 – 2
	33 – 52
97D95–06014	33 – 36
	33 – 42
	34 – 13
97D95–08014	27 – 2
97E75–08535	27 – 14
97E75–10545	27 – 4
	27 – 16
	27 – 17
	28 – 2
97E95–06510	23 – 25
97E95–06512	23 – 22
97E95–06516	5 – 30
	8 – 6
	18 – 8
	38 – 2
97E95–06520	17 – 4
97E95–06525	15 – 5
97E95–06530	33 – 31
97E95–06610	17 – 3
97E95–06616	23 – 39
97E95–08520	23 – 13
97E95–08525	29 – 45

PART NO. N° PIECES	REF. NO.
97E95–08525	36 – 12
97E95–08540	33 – 30
97E95–10545	30 – 6
98980–05025	3 – 17
	5 – 12
	27 – 31
99001–08600	29 – 21
99002–03600	25 – 57
99009–47500	25 – 24
99530–14016	5 – 18