YAMAHA

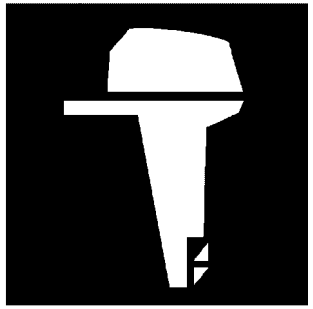

PARTS CATALOGUE
CATALOGUE DE PIECES DETACHEES

F115B-2025 (6EKC)
LF115B-2025 (6ELC)

YAMAHA
GENUINE
Parts & Accessories

1Z6EK-300FA

( )

F115B/LF115B
PARTS CATALOGUE
©2025 by Yamaha Motor Co., Ltd.
1st edition, June 2025
All rights reserved.
Any reprinting or unauthorized use
without the written permission of
Yamaha Motor Co., Ltd.
is expressly prohibited.
Printed in Japan.

F115B/LF115B
CATALOGUE DE PIECES DETACHEES
©2025 par Yamaha Motor Co., Ltd.
1re édition, juin 2025
Tous droits réservés
Toute réimpression ou utilisation
non autorisée sans la permission écrite
de Yamaha Motor Co., Ltd.
est formellement interdite.
Imprimé au Japon

FOREWORD

This Parts Catalogue is related to the parts for the model(s) on the cover page. When you are ordering replacement parts, please refer to this Parts Catalogue and quote both part numbers and part names correctly.

1. Modifications or additions which have been made after the issue of the Parts Catalogue will be announced in the Parts News.
   It is advisable that you make the necessary corrections to the Parts Catalogue according to the Parts News.

2. Abbreviations
   The following abbreviations are used in this Parts Catalogue.
   "UR" Use specified parts number.
   "UN" Use as many as needed.
   "AP" Alternate Parts
   "LM" Locally Made (Parts need to be ordered locally)
   "F#" Frame No. (Applicable machine No.)
   "O/S" Over Size

3. The number of components for assembly
   - Parts, which are to be supplied in an assembly, are listed with a dot (.) in front of the part name as shown below.
   - The numeral appearing to the right of each component part indicates the quantity of parts for each assembly unit.

PART NO.	DESCRIPTION	Q'TY	REMARKS
2F5–83310–60	FRONT FLASHER LIGHT ASSY	2	
115–83311–60	.BULB (6V–18W)	1	

4. Applicable colours of graphics are represented in the "REMARKS" as shown below.

PART NO.	DESCRIPTION	Q'TY	REMARKS
2N4–24110–00–X5	FUEL TANK COMP.	2	MXR
3J1–24240–10	.GRAPHIC, FUEL TANK	1	FOR MXR

5. Note that the illustrations for reference in finding parts numbers are not to be used for assembling. When assembling, please use the applicable service manual.

6. The asterisk (*) before a reference number indicates modified items after the first edition.

7. Applicable Serial No.
   Engine Serial No.

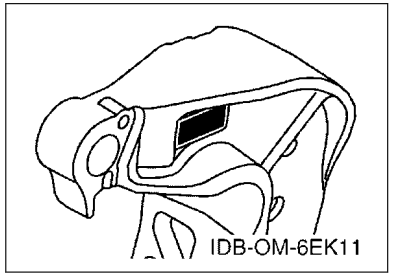

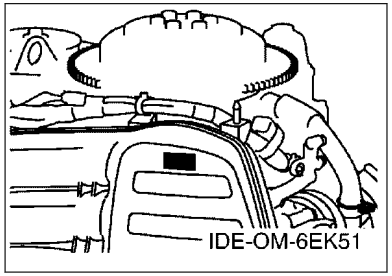

8. Applicable Engine Starting Serial No.

Model	Serial No.	Model	Serial No.
F115B	6EK-1139547	LF115B	6EL-1004828

9. Applicable Colour Code

Abbreviation	Colour Name	Colour Code
DBN1	DARK BLUISH GRAY 1	008D

10. Quantity Column Information

Column No.	Name Of Q'ty Column	Applicable Model
1	6EKC	F115B
2	6ELC	LF115B

AVANT–PROPOS

Ce catalogue de pièces détachées concerne les pièces pour le(s) modèle(s) indiqué(s) sur la page de couverture. Lorsque vous commandez des pièces de rechange, veuillez vous référer à ce catalogue de pieces détachées et indiquer clairement les numéros et les noms des pièces détachées.

1. Les modifications ou ajouts ayant été effectués après la parution du catalogue de pièces détachées seront décrits dans les Bulletins d'information concernant les pièces détachées.
   Il est recommandé que vous apportiez les corrections nécessaires au catalogue des pièces détachées en vous référant aux Bulletins d'information.

2. Abréviations
   Dans ce catalogue, les abréviations suivantes sont utilisées:
   "UR" Utiliser le numéro de pièces spécifié.
   "UN" Utiliser autant que nécessaire.
   "AP" Pièces de substitution
   "LM" Fabrication locale (les pièces doivent être commandées localement.)
   "F#" N° de cadre (applicable au N° de série)
   "O/S" Surdimensionné

3. Nombre de pièces d'un assemblage
   - Les pièces fournies comme composants d'un assemblage sont précédées d'un point (.) de la manière indiquée ci–dessous.
   - Le chiffre apparaissant à la droite de chaque composant indique la quantité de pièces pour chaque unité d'assemblage.

N° PIECES	DESCRIPTION	QTE	REMARQUES
2F5–83310–60	ENS. CLIGNOTANT AVANT	2	
115–83311–60	.AMPOULE (6V–18W)	1	

4. Les couleurs concernant les graphiques sont indiquées dans la colonne "REMARQUES", comme indiqué ci–dessous.

N° PIECES	DESCRIPTION	QTE	REMARQUES
2N4–24110–00–X5	RESERVOIR A ESSENCE.	2	MXR
3J1–24240–10	.GRAPHIQUE	1	POUR MXR

5. Veuillez noter que les illustrations sont indiquées à titre de référence pour trouver les numéros de pièces, non pour être utilisées lors de l'assemblage. Lors de l'assemblage, veuillez utiliser le manuel d'entretien adéquat.

6. L'astérisque (*) placé devant un numéro de référence indique des éléments qui ont été modifiés après la première édition.

7. N° de série applicable
   N° de Série du moteur

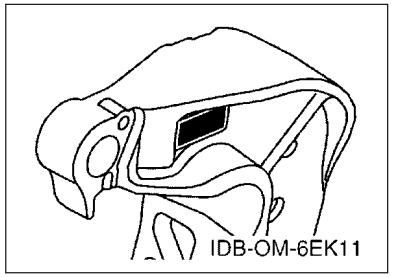

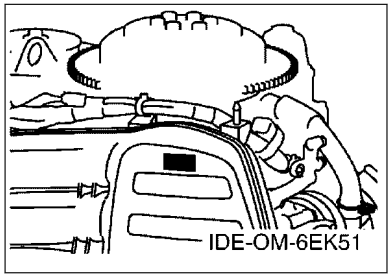

8. N° de série initial du moteur applicable

Modèle	N° de série	Modèle	N° de série
F115B	6EK-1139547	LF115B	6EL-1004828

9. Code couleur applicable

Abréviation	Nom de la couleur	Code couleur
DBN1	DARK BLUISH GRAY 1	008D

10. Informations relatives à la colonne Quantité

N° de la colonne	Nom de la colonne Qté	Modèle applicable
1	6EKC	F115B
2	6ELC	LF115B

CONTENTS

SCHEDULED SERVICE PARTS....1
TOP COWLING....2
CYLINDER & CRANKCASE 1....3
CRANKSHAFT & PISTON....5
CYLINDER & CRANKCASE 2....7
VALVE....9
INTAKE 1....11
INTAKE 2....13
INTAKE 3....14
FUEL INJECTION PUMP 1....15
FUEL INJECTION PUMP 2....17
EXHAUST....18
FUEL 1....19
FUEL 2....21
GENERATOR....22
ELECTRICAL 1....23
ELECTRICAL 2....24
ELECTRICAL 3....25
ELECTRICAL 4....26
ELECTRICAL 5....27
STARTING MOTOR....28
BOTTOM COWLING 1....29
BOTTOM COWLING 2....31
CONTROL....32
BRACKET 1....34
BRACKET 2....36
POWER TRIM & TILT ASSY 1....38
POWER TRIM & TILT ASSY 2....41
UPPER CASING....42
OIL PAN....44
LOWER CASING & DRIVE 1....45
LOWER CASING & DRIVE 2....49
LOWER CASING & DRIVE 3....52
LOWER CASING & DRIVE 4....56
STEERING GUIDE....58
OPTIONAL PARTS 1....59
OPTIONAL PARTS 2....62
OPTIONAL PARTS 3....63
OPTIONAL PARTS 4....64
OPTIONAL PARTS 5....65
OPTIONAL PARTS 6....66
REPAIR KIT 1....67
REPAIR KIT 2....68

INDEX

NUMERICAL INDEX....70

TABLE DES MATIERES

PIECES MAINTENANCE PERIODIQUE.....1
CAPOT SUPERIEUR..... 2
CYLINDRE & CARTER 1..... 3
VILEBREQUIN & PISTON.....5
CYLINDRE & CARTER 2..... 7
SOUPAPE..... 9
ADMISSION 1.....11
ADMISSION 2.....13
ADMISSION 3.....14
POMPE A INJECTEUR 1..... 15
POMPE A INJECTEUR 2..... 17
ECHAPPEMENT..... 18
CARBURANT 1..... 19
CARBURANT 2..... 21
GENERATRICE.....22
PARTIE ELECTRIQUE 1.....23
PARTIE ELECTRIQUE 2.....24
PARTIE ELECTRIQUE 3.....25
PARTIE ELECTRIQUE 4.....26
PARTIE ELECTRIQUE 5.....27
DEMARREUR ELECTRIQUE.....28
CAPOT INFERIEUR 1.....29
CAPOT INFERIEUR 2.....31
COMMANDE..... 32
SUPPORT 1..... 34
SUPPORT 2..... 36
PUISSANCE PARER ET INCLINER 1..... 38
PUISSANCE PARER ET INCLINER 2..... 41
FOURREAU.....42
VENTILATEUR D'HUILE..... 44
BOITIER D HELICE TRANSMISSION1..... 45
BOITIER D HELICE TRANSMISSION2..... 49
BOITIER D'HELICE TRANSMISSION3.....52
BOITIER D'HELICE TRANSMISSION4.....56
FIXATION DE DIRECTION..... 58
PIECES OPTIONNELLES 1.....59
PIECES OPTIONNELLES 2.....62
PIECES OPTIONNELLES 3.....63
PIECES OPTIONNELLES 4.....64
PIECES OPTIONNELLES 5.....65
PIECES OPTIONNELLES 6.....66
KITS DE REPARATION 1..... 67
KITS DE REPARATION 2..... 68

INDEX

INDEX NUMERIQUE.....70

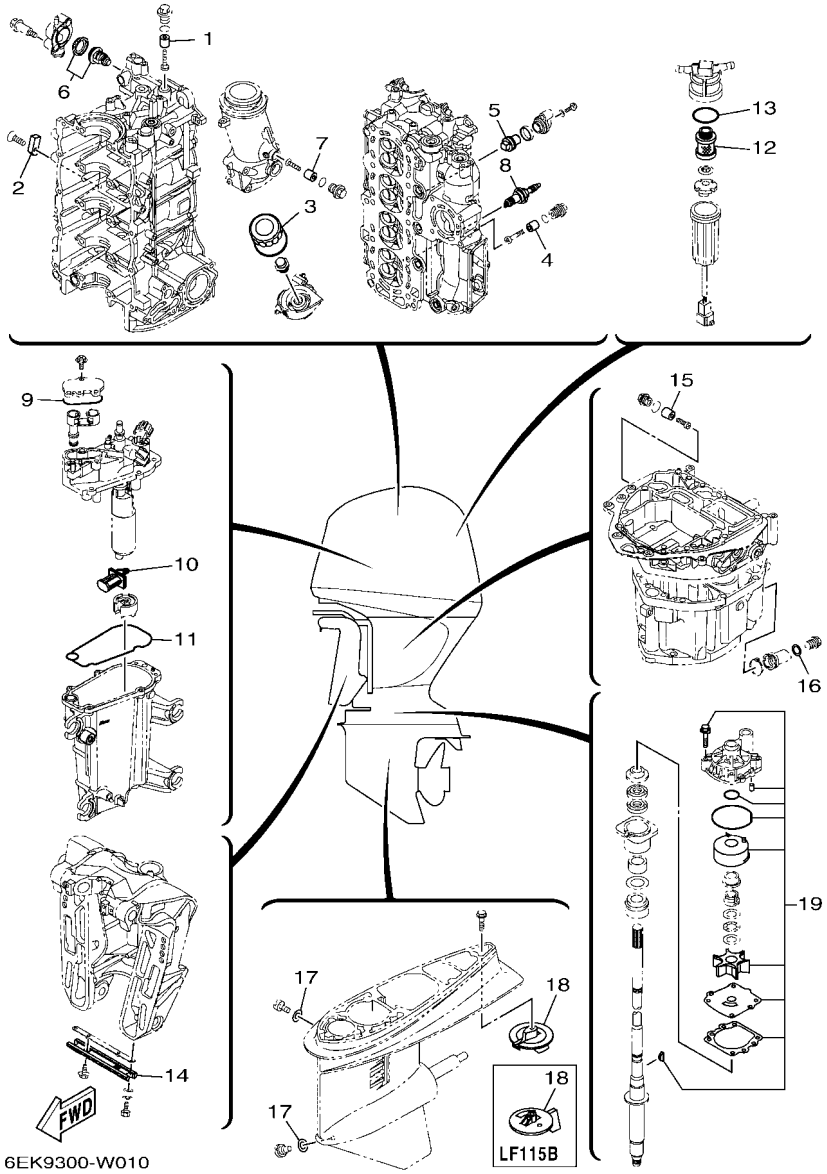

FIG. 1 SCHEDULED SERVICE PARTS — PIECES MAINTENANCE PERIODIQUE

REF. NO.	PART NO. N° PIECES	DESCRIPTION DESCRIPTION	6EKC	6ELC				REMARKS REMARQUES
1	6G8–11325–00	ANODE ANODE	1	1				
2	63P–11325–01	ANODE ANODE	1	1				
3	5GH–13440–72	ELEMENT ASSY, OIL CLEANER ELEMENT, FILTRE A HUILE	1	1				
4	6G8–11325–00	ANODE ANODE	1	1				
5	6ML–11325–00	ANODE ANODE	1	1				
6	6EK–12411–00	THERMOSTAT THERMOSTAT	1	1				
7	6EK–11325–00	ANODE ANODE	1	1				
8	94702–00437	PLUG, SPARK (NGK LKR6E) BOUGIE D,ALLUMAGE (NGK LKR6E)	4	4				
9	6CB–13016–00	O-RING JOINT TORIQUE	1	1				
10	63P–13915–00	FILTER FILTRE	1	1				
11	6CB–14984–00	GASKET, FLOAT CHAMBER JOINT, CUVE DE FLOTTEUR	1	1				
12	6D8–24563–00	ELEMENT, FILTER ELEMENT, FILTRE	1	1				
13	6D8–24564–00	GASKET JOINT	1	1				
14	6H1–45251–03	ANODE ANODE	1	1				
15	6G8–11325–00	ANODE ANODE	1	1				
16	90430–14M09	GASKET JOINT	1	1				
17	90430–08003	GASKET JOINT	2	2				
18	6E5–45371–01	TAB-TRIM ANODE DERIVE	1					
	6L6–45371–00	TAB-TRIM ANODE DERIVE		1				
19	68V–W0078–01	WATER PUMP REPAIR KIT KIT DE REPARATION DE LA POMPE	1	1				

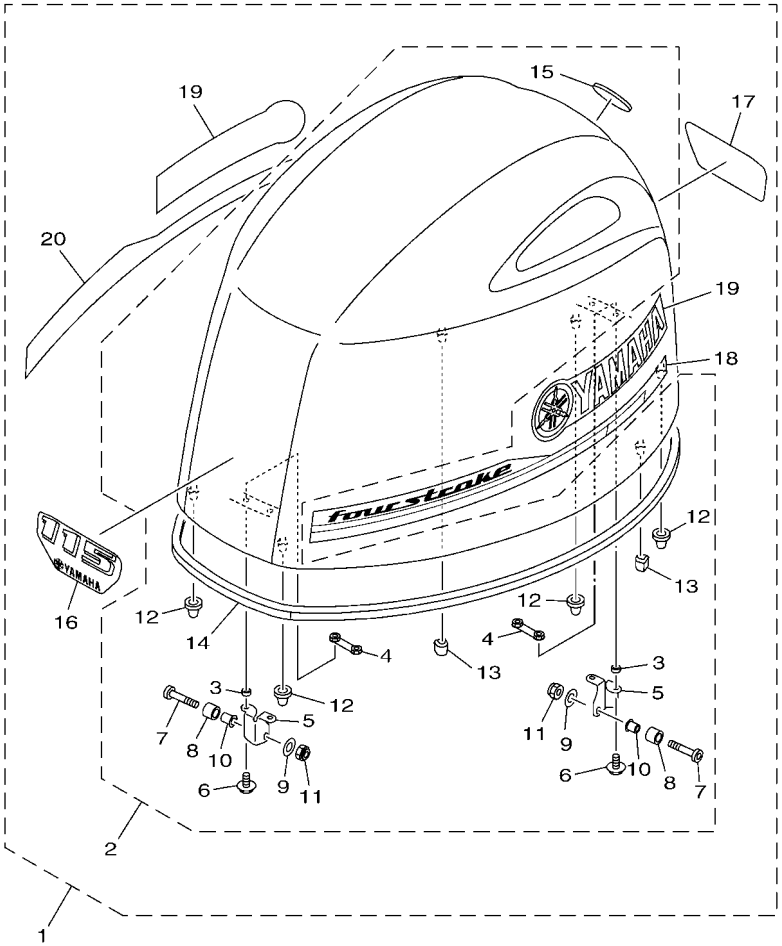

6EK3100-Q020

FIG. 2 TOP COWLING — CAPOT SUPERIEUR

REF. NO.	PART NO. N° PIECES	DESCRIPTION DESCRIPTION	6EKC	6ELC				REMARKS REMARQUES
1	6EK–42610–02	TOP COWLING ASSY CAPOT (ENS.)	1	1				
2	6EK–4261A–02	.TOP COWLING W/O GRAPHICS .CAPOT SUPERIEUR SANS GRAPHIQUE	1	1				
3	90387–07046	..COLLAR ..COLLERETTE	4	4				
4	6EK–42646–00	..PLATE, CLAMP ..PLAQUE, PRESSE	2	2				
5	6EK–42647–00	..HOLDER, CLAMP BAND ..SUPPORT, SANDOW DE SERRAGE	2	2				
6	90105–06039	..BOLT, FLANGE ..BOULON, A COLLERETTE	4	4				
7	90111–08078	..BOLT, HEXAGON SOCKET BUTTON ..BOULON	2	2				
8	90387–10094	..COLLAR ..COLLERETTE	2	2				
9	92990–08600	..WASHER, PLATE ..RONDELLE, PLATE	2	2				
10	90387–08M45	..COLLAR ..COLLERETTE	2	2				
11	95780–08300	..NUT, FLANGE ..ECROU	2	2				
12	68F–42663–01	..DAMPER 2 ..AMORTISSEUR 2	4	4				
13	6EK–42662–01	..DAMPER ..AMORTISSEUR	2	2				
14	6EK–42615–01	..SEAL ..JOINT	1	1				
15	6DA–42697–00	..TUNING FORK MARK ..MARQUE, YAMAHA	1	1				
16	68V–42677–30	.GRAPHIC, FRONT .ADHESIF, AVANT	1	1				
17	68V–42678–41	.GRAPHIC, REAR .ADHESIF, ARRIERE	1	1				
18	6EK–42675–00	.GRAPHIC, SIDE 1 .EMBLEME	1	1				
19	6D6–42681–00	.MARK, COWLING .ADHESIF, CAPOT	2	2				
20	6EK–42676–00	.GRAPHIC, SIDE 2 .EMBLEME	1	1				

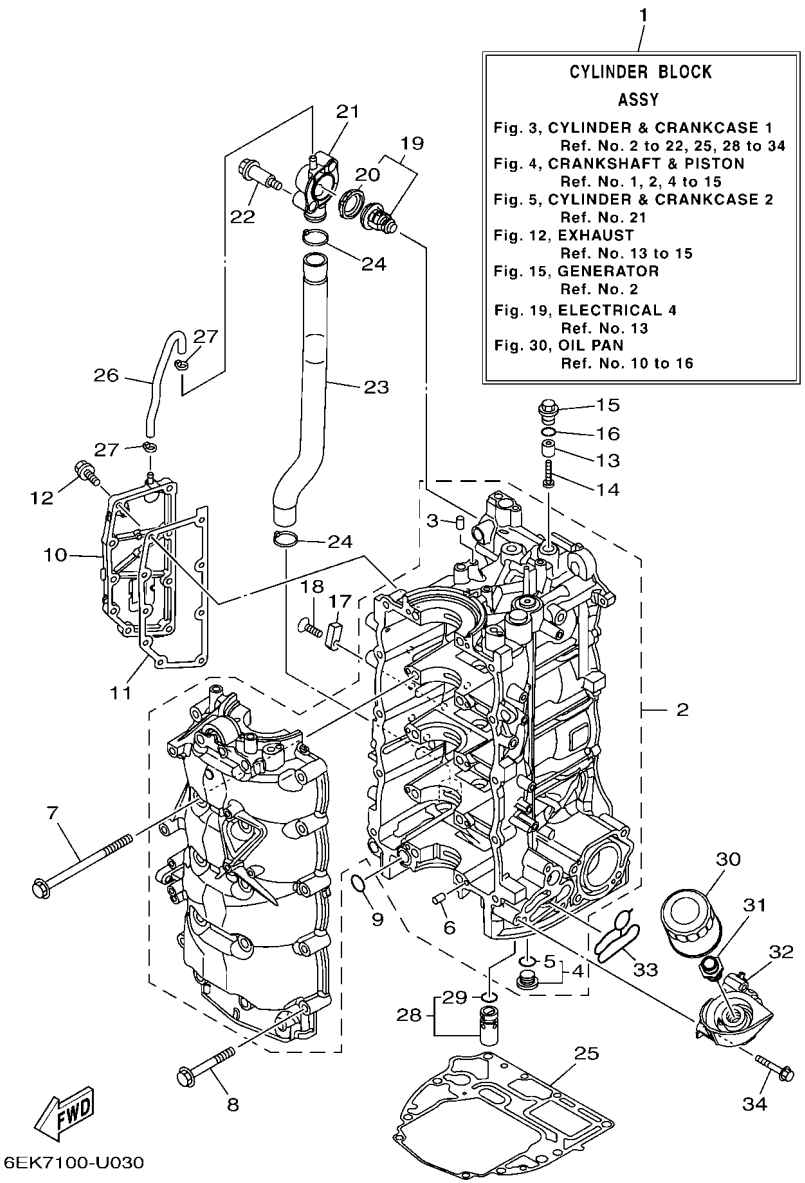

FIG. 3 CYLINDER & CRANKCASE 1 — CYLINDRE & CARTER 1

REF. NO.	PART NO. N° PIECES	DESCRIPTION DESCRIPTION	6EKC	6ELC				REMARKS REMARQUES
1	6EK–W009B–14–9S	CYLINDER BLOCK ASSY CYLINDRE GROUPE (ENS.)	1	1				
2	6EK–15109–02–9S	CRANKCASE ASSY CARTER DE MOTEUR COMPLET	1	1				
3	93606–19M23	.PIN, DOWEL .GOUPILLE	1	1				
4	6EK–11313–00	.PLUG, BLIND .PLOT, BORGNE	1	1				
5	93210–207A0	..O-RING ..JOINT TORIQUE	1	1				
6	93606–12019	.PIN, DOWEL .GOUPILLE	10	10				
7	90119–10057	BOLT, WITH WASHER BOULON, AVEC RONDELLE	10	10				
8	90105–08170	BOLT, FLANGE BOULON, A COLLERETTE	10	10				
9	93210–19MJ1	O-RING JOINT TORIQUE	1	1				
10	6EK–15414–00–9S	COVER 1 COUVERCLE 1	1	1				
11	6EK–15353–01	GASKET, DRAIN JOINT, PLOT DE VIDANGE	1	1				
12	90105–06037	BOLT, FLANGE BOULON, A COLLERETTE	9	9				
13	6G8–11325–00	ANODE ANODE	1	1				
14	98980–05025	SCREW, BIND VIS, DE PRESSION	1	1				
15	6G8–11197–A0	PLUG, BLIND PLOT, BORGNE	1	1				
16	93210–13M63	O-RING JOINT TORIQUE	1	1				
17	63P–11325–01	ANODE ANODE	1	1				
18	90151–06M02	SCREW, COUNTERSUNK VIS, TETE NOYEE	1	1				
19	6EK–12411–00	THERMOSTAT THERMOSTAT	1	1				
20	6EK–12412–00	.SEAL, THERMOSTAT .JOINT, THERMOSTAT	1	1				
21	6EK–12413–00	COVER, THERMOSTAT COUVERCLE, THERMOSTAT	1	1				
22	90109–06286	BOLT BOULON	2	2				
23	6EK–1243A–00	HOSE 1 DURITE 1	1	1				
24	90465–11M59	CLAMP BRIDE	2	2				
25	6EK–11351–01	GASKET, CYLINDER JOINT, D'EMBASE	1	1				
26	6EK–12483–00	PIPE 3 DURITE 3	1	1				
27	90465–11M10	CLAMP BRIDE	2	2				

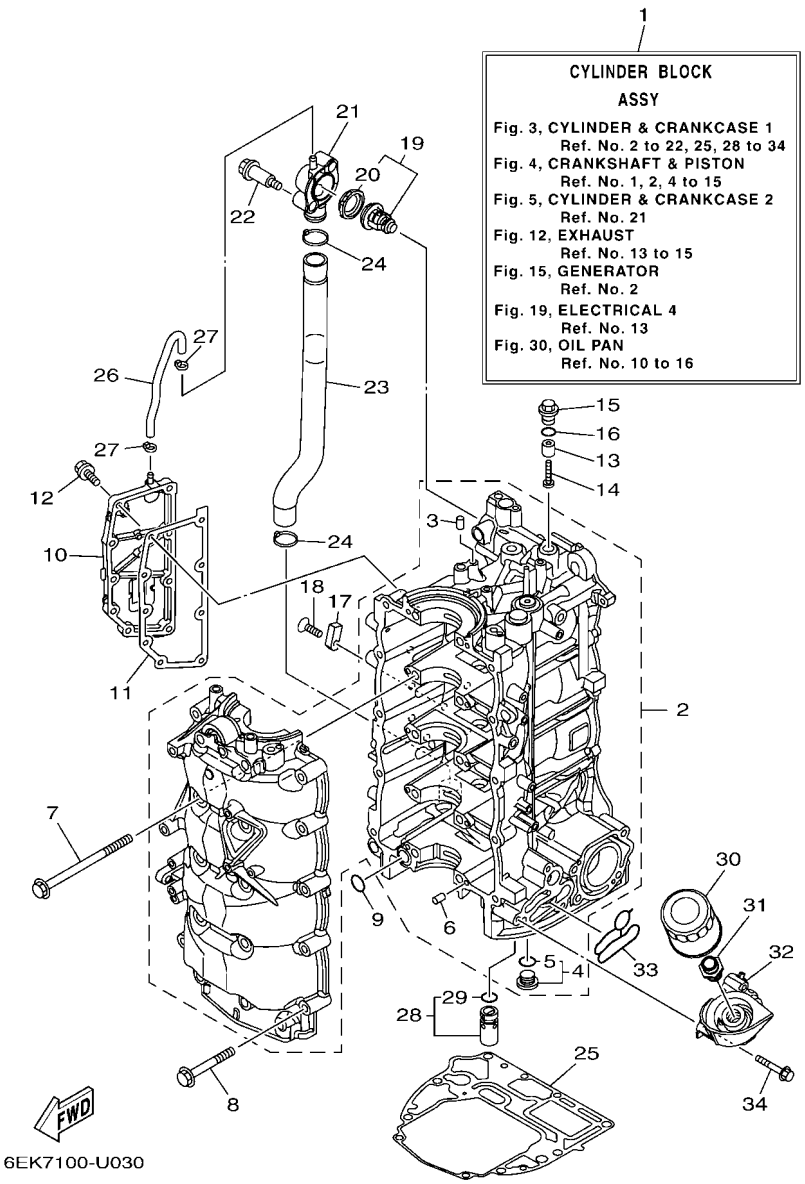

FIG. 3 CYLINDER & CRANKCASE 1 — CYLINDRE & CARTER 1

REF. NO.	PART NO. N° PIECES	DESCRIPTION DESCRIPTION	6EKC	6ELC				REMARKS REMARQUES
28	6EK–13490–00	RELIEF VALVE ASSY SOUPAPE DE SECURITE COMPLET	1	1				
29	6CB–13473–00	.O-RING .JOINT TORIQUE	1	1				
30	5GH–13440–72	ELEMENT ASSY, OIL CLEANER ELEMENT, FILTRE A HUILE	1	1				
31	90401–20007	BOLT, UNION BOULON, RACCORD	1	1				
32	6EK–13446–00	CONNECTOR CONNECTEUR	1	1				
33	6EK–13475–00	GASKET JOINT	1	1				
34	90105–06151	BOLT, FLANGE BOULON, A COLLERETTE	3	3				

FIG. 4 CRANKSHAFT & PISTON — VILEBREQUIN & PISTON

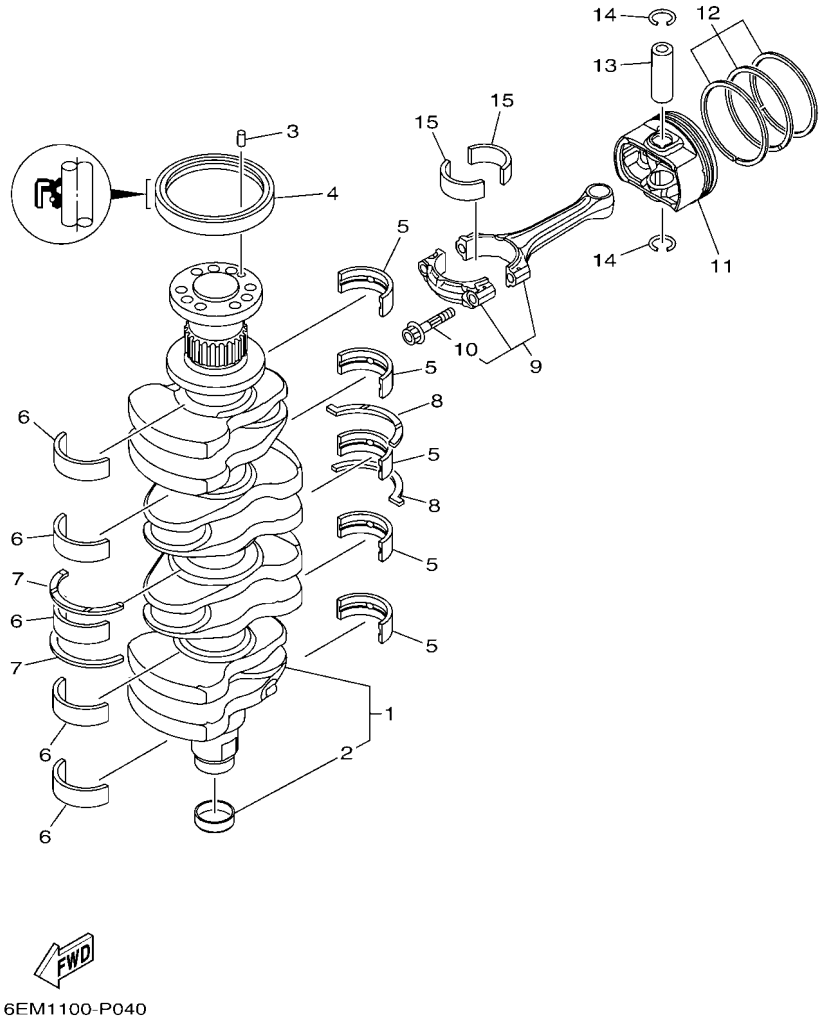

REF. NO.	PART NO. N° PIECES	DESCRIPTION DESCRIPTION	6EKC	6ELC				REMARKS REMARQUES
1	6EK–11410–01	CRANKSHAFT VILEBREQUIN COMPLET	1	1				
2	6CB–11478–00	.COLLAR .COLLERETTE	1	1				
3	93606–12019	PIN, DOWEL GOUPILLE	1	1				
4	93102–85008	OIL SEAL JOINT SPY	1	1				
5	6EK–11416–00	PLANE BEARING, CRANKSHAFT 1 COUSSINET DE VILEBREQUIN 1	5	5				UR YELLOW UR YELLOW
	6EK–11416–10	PLANE BEARING, CRANKSHAFT 1 COUSSINET DE VILEBREQUIN 1	5	5				UR GREEN UR GREEN
	6EK–11416–20	PLANE BEARING, CRANKSHAFT 1 COUSSINET DE VILEBREQUIN 1	5	5				UR BLUE UR BLUE
	6EK–11416–30	PLANE BEARING, CRANKSHAFT 1 COUSSINET DE VILEBREQUIN 1	5	5				UR RED UR RED
	6EK–11416–40	PLANE BEARING, CRANKSHAFT 1 COUSSINET DE VILEBREQUIN 1	5	5				UR BLACK UR BLACK
6	6EK–11417–00	PLANE BEARING, CRANKSHAFT 2 COUSSINET DE VILEBREQUIN 2	5	5				UR YELLOW UR YELLOW
	6EK–11417–10	PLANE BEARING, CRANKSHAFT 2 COUSSINET DE VILEBREQUIN 2	5	5				UR GREEN UR GREEN
	6EK–11417–20	PLANE BEARING, CRANKSHAFT 2 COUSSINET DE VILEBREQUIN 2	5	5				UR BLUE UR BLUE
	6EK–11417–30	PLANE BEARING, CRANKSHAFT 2 COUSSINET DE VILEBREQUIN 2	5	5				UR RED UR RED
	6EK–11417–40	PLANE BEARING, CRANKSHAFT 2 COUSSINET DE VILEBREQUIN 2	5	5				UR BLACK UR BLACK
7	6EK–11426–01	BEARING, THRUST 1 ROULEMENT DE BUTEE 1	2	2				
8	6EK–11427–00	BEARING, THRUST 2 ROULEMENT DE BUTEE 2	2	2				
9	6EK–W1165–00	CONNECTING ROD ASSY BIELLE COMPLETTE	4	4				
10	K1C–A3275–00	.BOLT, CONNECTING ROD .BOULON, BIELLE	2	2				
11	6EK–11631–02–94	PISTON (STD) PISTON (STD)	4	4				
	6EK–11635–02	PISTON (0.25MM O/S) PISTON (0.25MM O/S)	4	4				AP AP
12	6EK–11603–01	PISTON RING SET (STD) JEU DE SEGMENTS (STD)	4	4				
	6EK–11604–01	PISTON RING SET (0.25MM O/S) JEU DE SEGMENTS (0.25MM O/S)	4	4				AP AP
13	6EK–11633–00	PIN, PISTON AXE, PISTON	4	4				
14	93450–19052	CIRCLIP CIRCLIP	8	8				
15	6EK–11656–00	PLANE BEARING, CONNECTING ROD ROULEMENT DE BIELLE	8	8				UR YELLOW UR YELLOW
	6EK–11656–10	PLANE BEARING, CONNECTING ROD ROULEMENT DE BIELLE	8	8				UR GREEN UR GREEN
	6EK–11656–20	PLANE BEARING, CONNECTING ROD ROULEMENT DE BIELLE	8	8				UR BLUE UR BLUE

FIG. 4 CRANKSHAFT & PISTON — VILEBREQUIN & PISTON

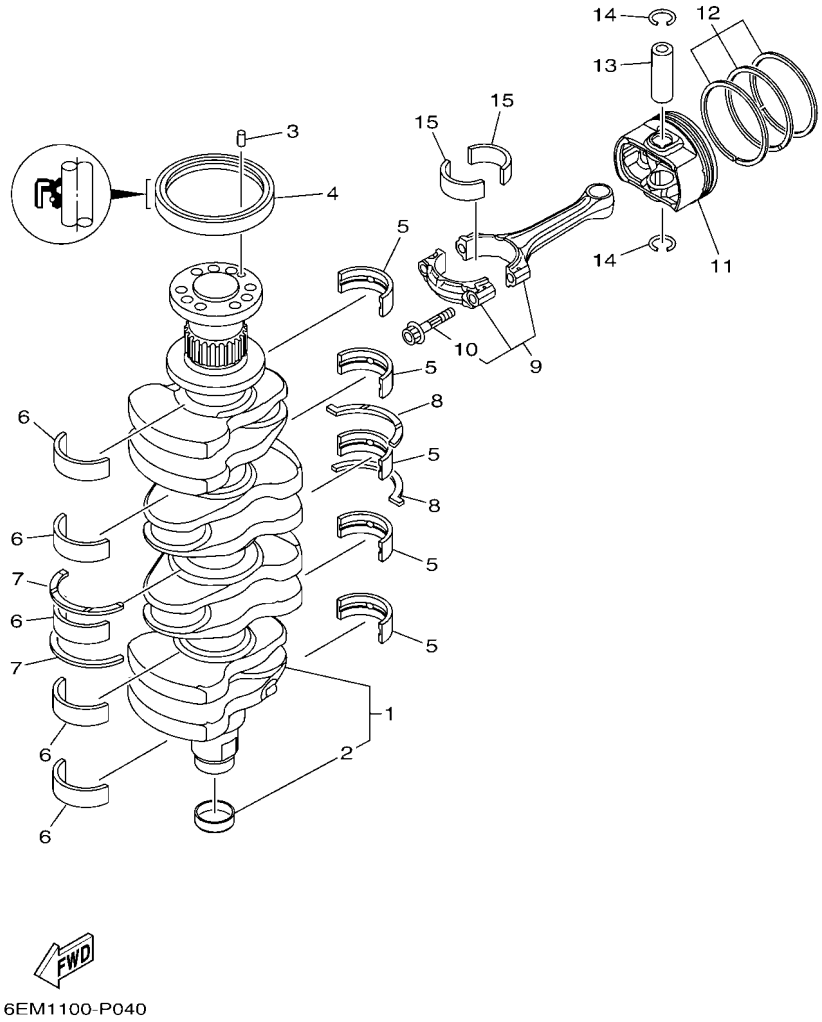

REF. NO.	PART NO. N° PIECES	DESCRIPTION DESCRIPTION	6EKC	6ELC				REMARKS REMARQUES
15	6EK–11656–30	PLANE BEARING, CONNECTING ROD ROULEMENT DE BIELLE	8	8				UR RED UR RED
	6EK–11656–40	PLANE BEARING, CONNECTING ROD ROULEMENT DE BIELLE	8	8				UR BLACK UR BLACK

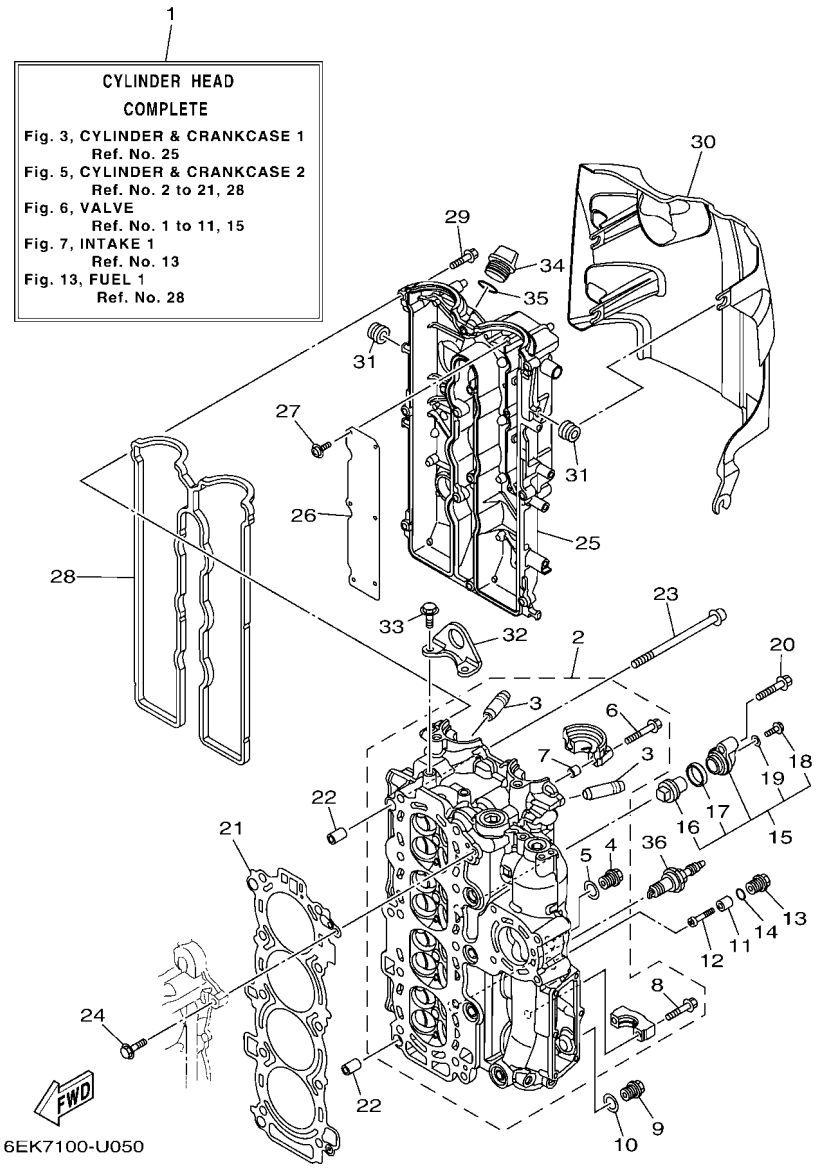

FIG. 5 CYLINDER & CRANKCASE 2 — CYLINDRE & CARTER 2

REF. NO.	PART NO. N° PIECES	DESCRIPTION DESCRIPTION	6EKC	6ELC				REMARKS REMARQUES
1	6EK–W009A–02–9S	CYLINDER HEAD COMPLETE CULASSE (ENS.)	1	1				
2	6EK–11110–00–9S	CYLINDER HEAD ASSY JEU DE CULASSE	1	1				
3	6DA–11133–10	.GUIDE, VALVE 1 .GUIDE, SOUPAPE 1	16	16				
4	90340–18M09	.PLUG, STRAIGHT SCREW .PLOT, FILETE DROIT	1	1				
5	90201–186F1	.WASHER, PLATE .RONDELLE, PLATE	1	1				
6	90119–07235	.BOLT/WASHER-CAM CAPS .BOULON, AVEC RONDELLE	4	4				
7	91809–08006	.PIN, DOWEL .GOUJON, D'ASSEMBLAGE	4	4				
8	90119–07234	.BOLT, WITH WASHER .BOULON, AVEC RONDELLE	16	16				
9	90340–14M06	PLUG, STRAIGHT SCREW PLOT, FILETE DROIT	1	1				
10	90430–14115	GASKET JOINT	1	1				
11	6G8–11325–00	ANODE ANODE	1	1				
12	98980–05025	SCREW, BIND VIS, DE PRESSION	1	1				
13	6G8–11197–A0	PLUG, BLIND PLOT, BORGNE	1	1				
14	93210–13M63	O-RING JOINT TORIQUE	1	1				
15	69J–11301–02	ANODE COVER ASSY COUVERCLE ANODE (ENS.)	1	1				
16	6ML–11325–00	.ANODE .ANODE	1	1				
17	67F–11328–01	.GROMMET, ANODE .PASSE-FIL	1	1				
18	90105–06M07	.BOLT, FLANGE .BOULON, A COLLERETTE	1	1				
19	90430–06M03	.GASKET .JOINT	1	1				
20	95D75–08040	BOLT, FLANGE DEEP RECESS BOULON FIXATION	1	1				
21	6EK–11181–00	GASKET, CYLINDER HEAD 1 JOINT, DE CULASSE 1	1	1				
22	99530–14016	PIN, DOWEL GOUJON, D'ASSEMBLAGE	2	2				
23	90149–10072	SCREW VIS	10	10				
24	90105–06037	BOLT, FLANGE BOULON, A COLLERETTE	1	1				
25	6EK–11191–10	COVER, CYLINDER HEAD 1 COUVERCLE, CULASSE 1	1	1				
26	6EK–11168–00	COVER, BREATHER COUVERCLE, RENIFLARD	1	1				
27	97607–04208	SCREW, WITH WASHER VIS, AVEC RONDELLE	6	6				

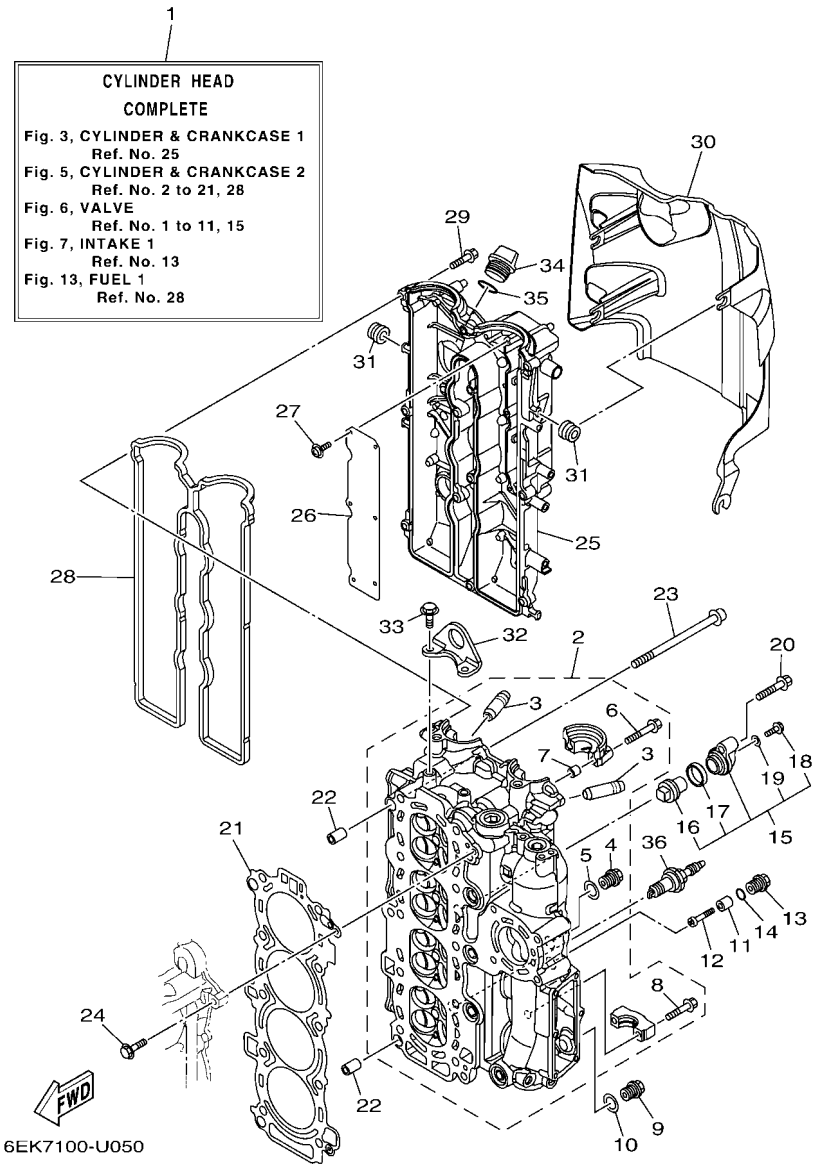

FIG. 5 CYLINDER & CRANKCASE 2 — CYLINDRE & CARTER 2

REF. NO.	PART NO. N° PIECES	DESCRIPTION DESCRIPTION	6EKC	6ELC				REMARKS REMARQUES
28	6EK–11193–00	GASKET, HEAD COVER 1 JOINT, COUVERCLE DE CULASSE 1	1	1				
29	95D95–06030	BOLT, FLANGE DEEP RECESS BOULON FIXATION	12	12				
30	6EK–11192–01	COVER, CYLINDER HEAD 2 COUVERCLE, CULASSE 2	1	1				
31	90480–12314	GROMMET PASSE-FIL	4	4				
32	6EK–11119–00	HANGER, ENGINE ANNEAU, LEVAGE	1	1				
33	95D95–08020	BOLT, FLANGE DEEP RECESS BOULON FIXATION	2	2				
34	6G8–15363–00	PLUG, OIL PLOT, HUILE	1	1				
35	93210–24M79	O-RING JOINT TORIQUE	1	1				
36	94702–00437	PLUG, SPARK (NGK LKR6E) BOUGIE D,ALLUMAGE (NGK LKR6E)	4	4				

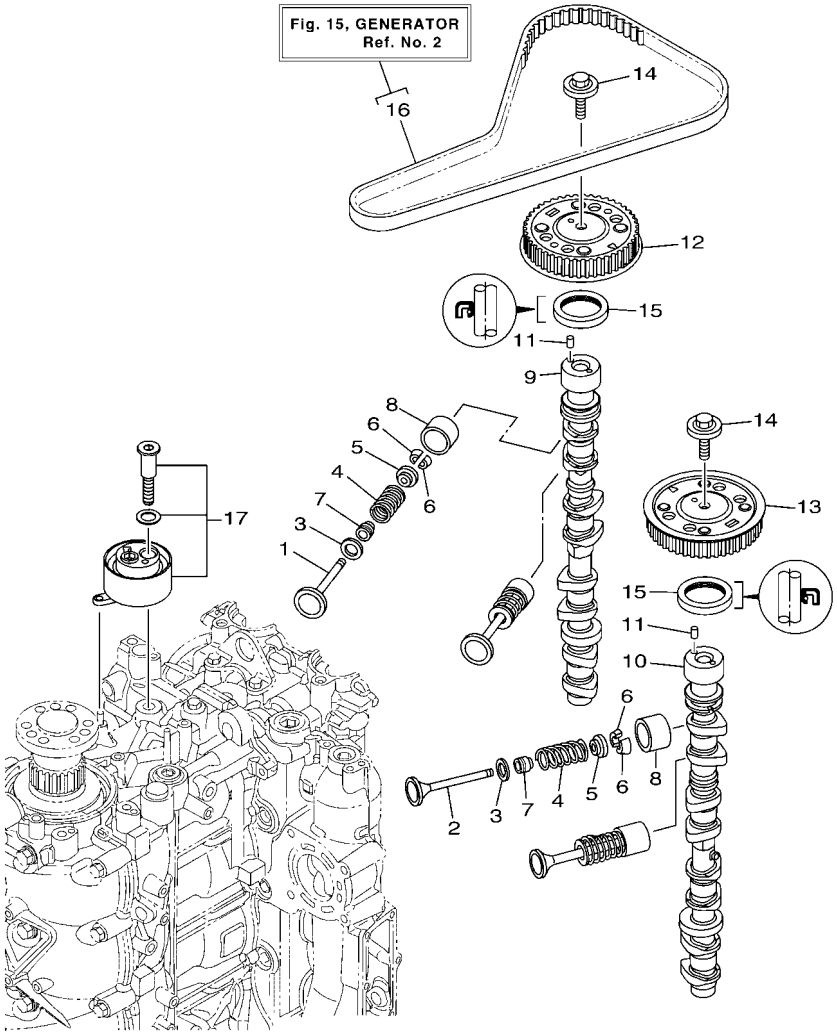

6EM1100-P060

FIG. 6 VALVE — SOUPAPE

REF. NO.	PART NO. N° PIECES	DESCRIPTION DESCRIPTION	6EKC	6ELC				REMARKS REMARQUES
1	6EK–12111–00	VALVE, INTAKE SOUPAPE, ADMISSION	8	8				
2	6EK–12121–00	VALVE, EXHAUST SOUPAPE, ECHAPPEMENT	8	8				
3	62Y–12116–00	SEAT, VALVE SPRING SIEGE, RESSORT DE SOUPAPE	16	16				
4	30X–12114–00	SPRING, VALVE OUTER RESSORT DE SOUPAPE, EXTERNE	16	16				
5	30X–12117–00	RETAINER, VALVE SPRING BUTEE DE RESSORT DE SOUPAPE	16	16				
6	30X–12118–00	LOCK, VALVE SPRING RETAINER FRAISE, SOUPAPE	32	32				
7	51Y–12119–00	SEAL, VALVE STEM JOINT, QUEUE DE SOUPAPE	16	16				
8	6D8–12153–00	LIFTER, VALVE (12) LEVE-SOUPAPE (12)	16	16				UR UR
	6D8–12153–10	LIFTER, VALVE (14) LEVE-SOUPAPE (14)	16	16				UR UR
	6D8–12153–20	LIFTER, VALVE (16) LEVE-SOUPAPE (16)	16	16				UR UR
	6D8–12153–30	LIFTER, VALVE (18) LEVE-SOUPAPE (18)	16	16				UR UR
	6D8–12153–40	LIFTER, VALVE (20) LEVE-SOUPAPE (20)	16	16				UR UR
	6D8–12153–50	LIFTER, VALVE (22) LEVE-SOUPAPE (22)	16	16				UR UR
	6D8–12153–60	LIFTER, VALVE (24) LEVE-SOUPAPE (24)	16	16				UR UR
	6D8–12153–70	LIFTER, VALVE (26) LEVE-SOUPAPE (26)	16	16				UR UR
	6D8–12153–80	LIFTER, VALVE (28) LEVE-SOUPAPE (28)	16	16				UR UR
	6D8–12153–90	LIFTER, VALVE (30) LEVE-SOUPAPE (30)	16	16				UR UR
	6D8–12153–A0	LIFTER, VALVE (32) LEVE-SOUPAPE (32)	16	16				UR UR
	6D8–12153–B0	LIFTER, VALVE (34) LEVE-SOUPAPE (34)	16	16				UR UR
	6D8–12153–C0	LIFTER, VALVE (36) LEVE-SOUPAPE (36)	16	16				UR UR
	6D8–12153–D0	LIFTER, VALVE (38) LEVE-SOUPAPE (38)	16	16				UR UR
	6D8–12153–E0	LIFTER, VALVE (40) LEVE-SOUPAPE (40)	16	16				UR UR
	6D8–12153–F0	LIFTER, VALVE (42) LEVE-SOUPAPE (42)	16	16				UR UR
	6D8–12153–G0	LIFTER, VALVE (44) LEVE-SOUPAPE (44)	16	16				UR UR
	6D8–12153–H0	LIFTER, VALVE (46) LEVE-SOUPAPE (46)	16	16				UR UR
	6D8–12153–J0	LIFTER, VALVE (48) LEVE-SOUPAPE (48)	16	16				UR UR
	6D8–12153–K0	LIFTER, VALVE (50) LEVE-SOUPAPE (50)	16	16				UR UR

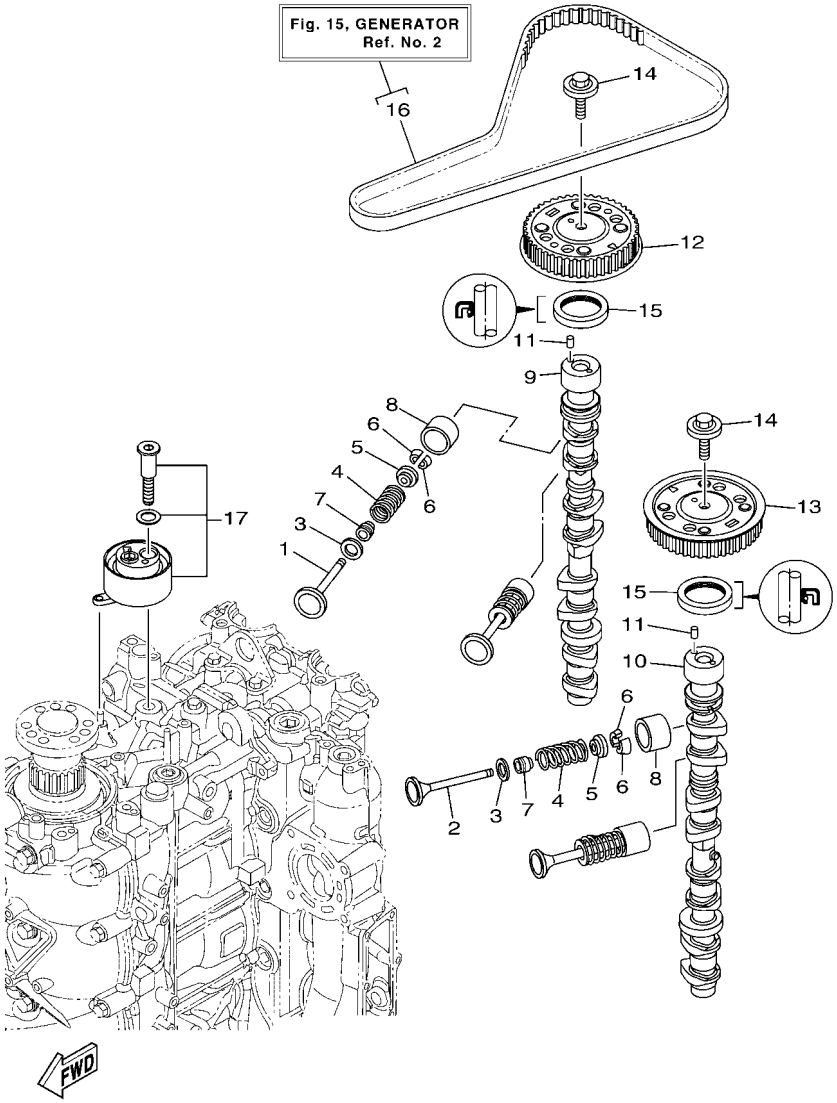

6EM1100-P060

FIG. 6 VALVE — SOUPAPE

REF. NO.	PART NO. N° PIECES	DESCRIPTION DESCRIPTION	6EKC	6ELC				REMARKS REMARQUES
8	6D8–12153–L0	LIFTER, VALVE (52) LEVE-SOUPAPE (52)	16	16				UR UR
	6D8–12153–M0	LIFTER, VALVE (54) LEVE-SOUPAPE (54)	16	16				UR UR
	6D8–12153–N0	LIFTER, VALVE (56) LEVE-SOUPAPE (56)	16	16				UR UR
	6D8–12153–P0	LIFTER, VALVE (58) LEVE-SOUPAPE (58)	16	16				UR UR
	6D8–12153–R0	LIFTER, VALVE (60) LEVE-SOUPAPE (60)	16	16				UR UR
	6D8–12153–S0	LIFTER, VALVE (62) LEVE-SOUPAPE (62)	16	16				UR UR
	6D8–12153–T0	LIFTER, VALVE (64) LEVE-SOUPAPE (64)	16	16				UR UR
	6D8–12153–U0	LIFTER, VALVE (66) LEVE-SOUPAPE (66)	16	16				UR UR
	6D8–12153–V0	LIFTER, VALVE (68) LEVE-SOUPAPE (68)	16	16				UR UR
9	6EK–12171–00	CAMSHAFT 1 ARBRE A CAMES 1	1	1				
10	6EK–12181–00	CAMSHAFT 2 ARBRE A CAMES 2	1	1				
11	93605–10108	PIN, DOWEL AXE	2	2				
12	6EK–11537–00	GEAR, DRIVEN PIGNON SECONDAIRE	1	1				
13	6EK–11567–00	GEAR, DRIVEN 2 PIGNON SECONDAIRE 2	1	1				
14	90119–10050	BOLT, WITH WASHER BOULON, AVEC RONDELLE	2	2				
15	93102–38008	OIL SEAL JOINT SPY	2	2				
16	6EK–W4624–00	BELT (WITH ROTOR BOLTS) COURROIE (AVEC BOULON)	1	1				
17	6EK–11590–03	TENSIONER ASSY TENDEUR (ENS.)	1	1				

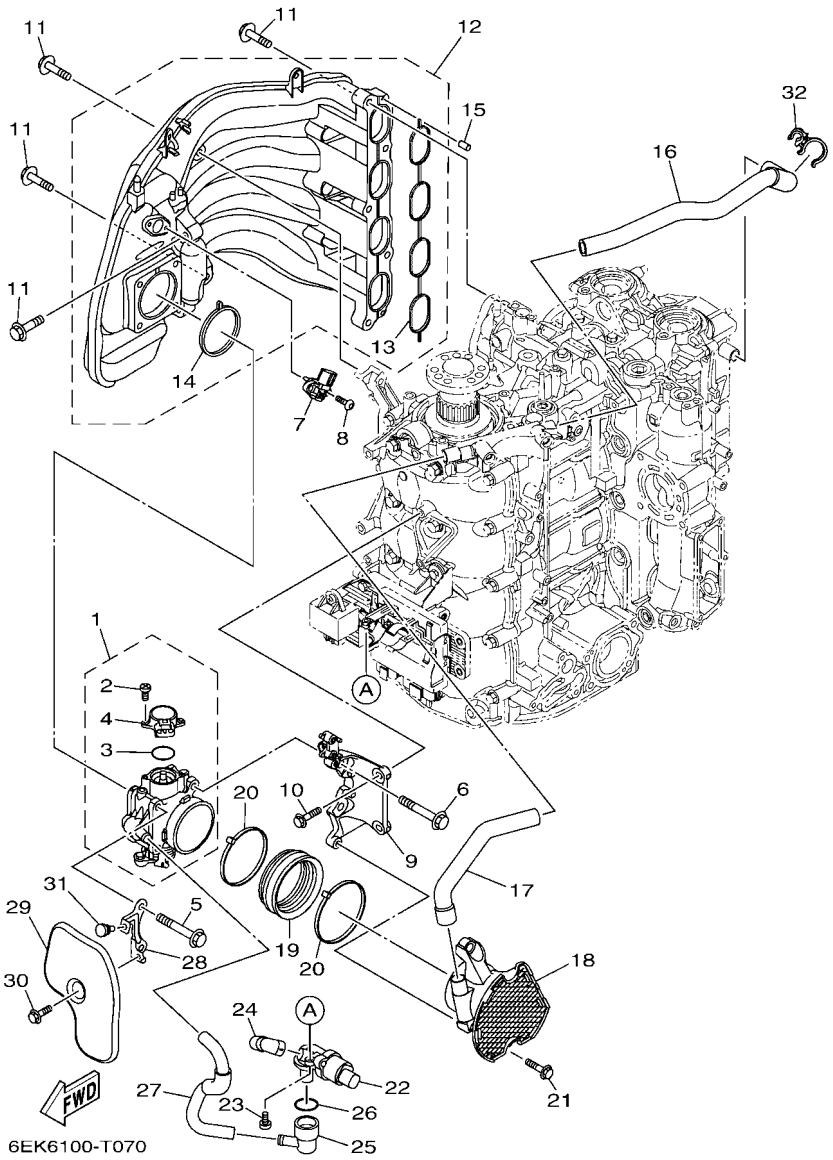

FIG. 7 INTAKE 1 — ADMISSION 1

REF. NO.	PART NO. N° PIECES	DESCRIPTION DESCRIPTION	6EKC	6ELC				REMARKS REMARQUES
1	6EK–13751–00	BODY, THROTTLE 1 CARTER 1	1	1				
2	6C5–81145–00	.SCREW 1 .VIS 1	2	2				
3	6C5–8182L–00	.O-RING 1 .JOINT TORIQUE 1	1	1				
4	6C5–85885–00	.THROTTLE SENSOR ASSY .SENSITOMETRE (ENS.)	1	1				
5	95D75–08060	BOLT, FLANGE DEEP RECESS BOULON FIXATION	2	2				
6	90105–08186	BOLT, FLANGE BOULON, A COLLERETTE	2	2				
7	68F–83688–10	SENSOR ASSY SONDE (ENS.)	1	1				
8	90111–05037	BOLT, HEXAGON SOCKET BUTTON BOULON	2	2				
9	6EK–13152–02	STAY 2 SUPPORT2	1	1				
10	95D75–06025	BOLT, FLANGE DEEP RECESS BOULON FIXATION	2	2				
11	90119–08022	BOLT, WITH WASHER BOULON, AVEC RONDELLE	9	9				
12	6EK–13641–01	MANIFOLD, INTAKE 1 TUBULURE, ADMISSION 1	1	1				
13	6EK–13645–00	.GASKET, MANIFOLD 1 .JOINT, TUBULURE 1	1	1				
14	6EK–13646–00	.GASKET, MANIFOLD 2 .JOINT, TUBULURE 2	1	1				
15	91690–50014	PIN, SPRING AGRAFFE	2	2				
16	6EK–15373–10	PIPE, BREATHER DURITE DE RENIFLARD	1	1				
17	6EK–15393–00	PIPE, BREATHER 2 DURITE, RENIFLARD 2	1	1				
18	6DA–14440–00	SILENCER ASSY, INTAKE SIENCIEUX D'ADMISSION	1	1				
19	6P2–1441J–01	PIPE, SILENCER DURITE, DE SILENCIEUX	1	1				
20	90464–99004	CLAMP BRIDE	2	2				
21	95D75–06025	BOLT, FLANGE DEEP RECESS BOULON FIXATION	2	2				
22	6C5–13713–02	VALVE, IDLE SPEED CONTROL SOUPAPE, AJUSTEMENT DE VITESSE	1	1				
23	97980–05214	SCREW, WITH WASHER VIS, AVEC RONDELLE	2	2				
24	68V–13897–00	PIPE, AIR DURITE, A AIR	1	1				
25	6CJ–11372–00	NIPPLE, HOSE RACCORD, TUYAU	1	1				
26	93210–33003	O-RING JOINT TORIQUE	1	1				
27	6EK–13543–00	HOSE, AIR DURITE, A AIR	1	1				

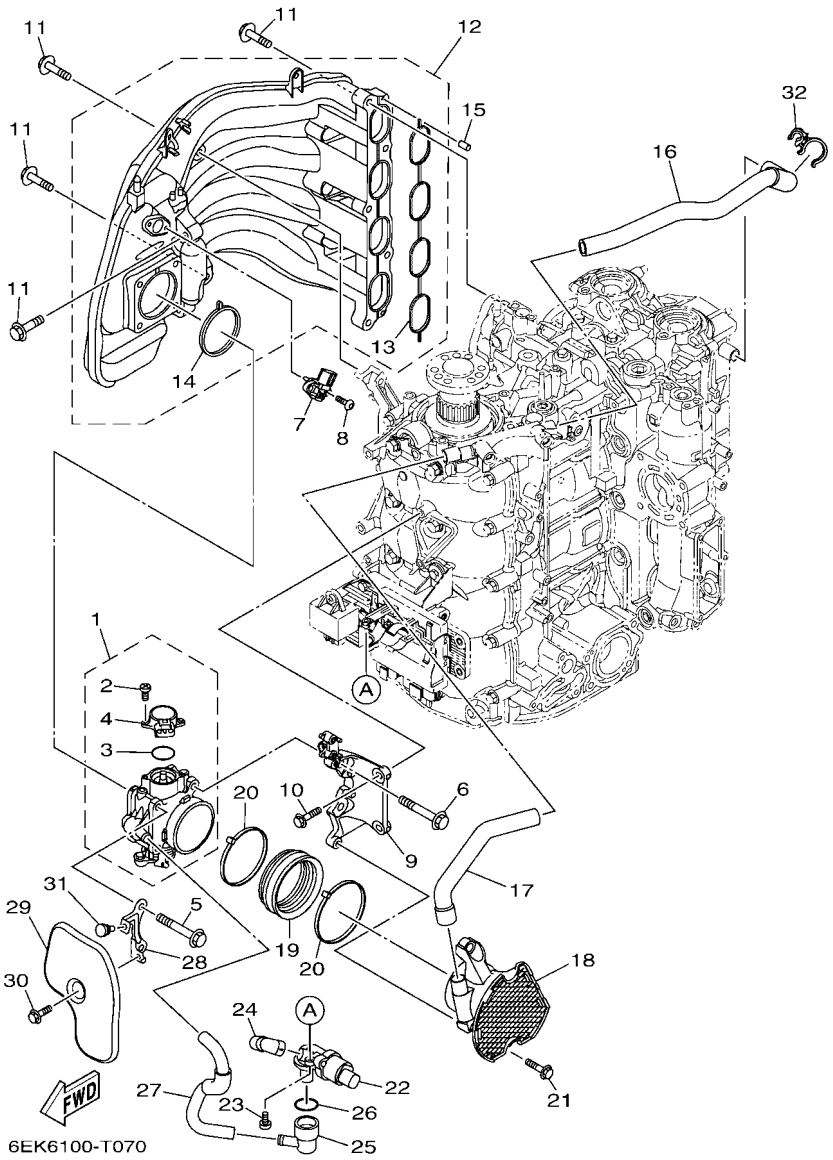

FIG. 7 INTAKE 1 — ADMISSION 1

REF. NO.	PART NO. N° PIECES	DESCRIPTION DESCRIPTION	6EKC	6ELC				REMARKS REMARQUES
28	6EK–13843–00	PLATE 1 PLAQUE 1	1	1				
29	6EK–13881–01	COVER 1 COUVERCLE 1	1	1				
30	95D95–06016	BOLT, FLANGE DEEP RECESS BOULON FIXATION	1	1				
31	90480–06M19	GROMMET PASSE-FIL	1	1				
32	90464–21002	CLAMP BRIDE	1	1				

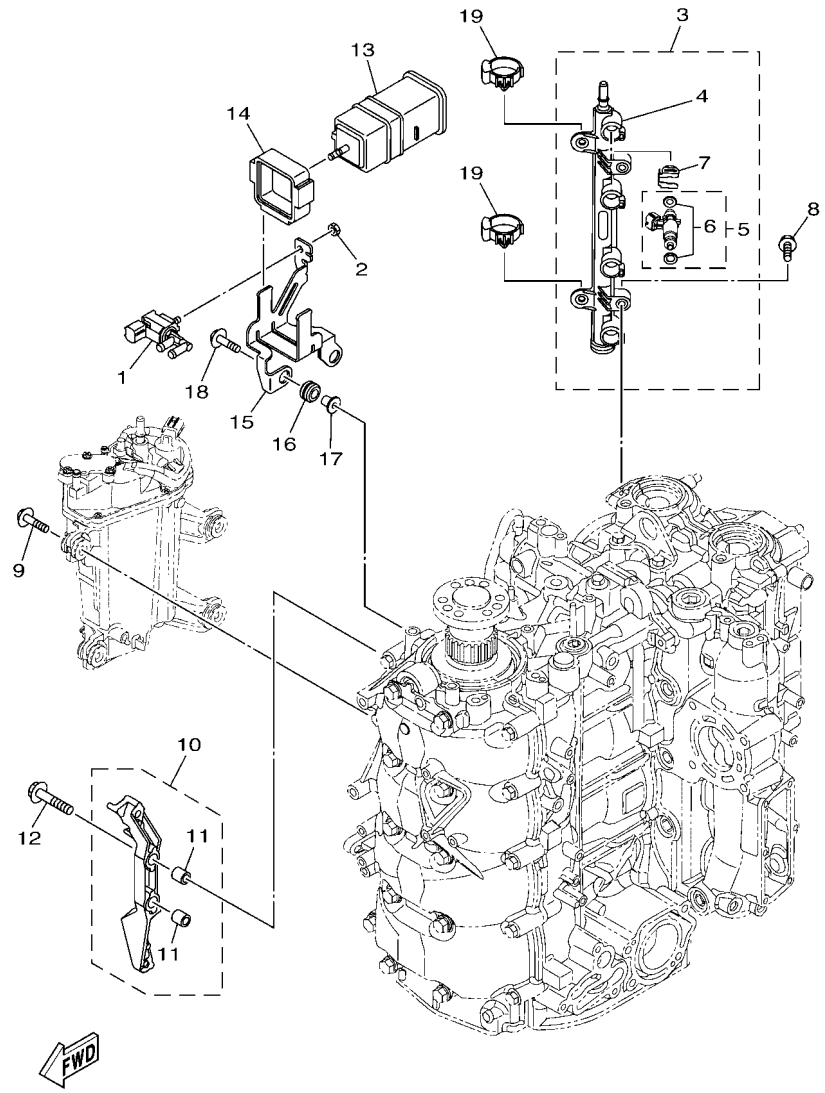

6EK6100-T080

FIG. 8 INTAKE 2 — ADMISSION 2

REF. NO.	PART NO. N° PIECES	DESCRIPTION DESCRIPTION	6EKC	6ELC				REMARKS REMARQUES
1	6C5–86120–00	SOLENOID VALVE ASSY SOLENOIDE	1	1				
2	95380–06600	NUT, HEXAGON ECROU	1	1				
3	6EK–13160–01	DELIVERY PIPE ASSY 1 ENS. TUBE DE REFOULEMENT 1	1	1				
4	6EK–13161–00	.PIPE, DELIVERY 1 .DURITE REFOULEMENT 1	1	1				
5	6EK–13761–01	.INJECTOR .INJECTEUR	4	4				
6	6AW–1410B–00	..PACKING KIT ..POCHETTE DE JOINTS	1	1				
7	6AW–13577–10	.CLIP .AGRAFE	4	4				
8	90105–06M08	BOLT, FLANGE BOULON, A COLLERETTE	2	2				
9	90119–06299	BOLT, WITH WASHER BOULON, AVEC RONDELLE	4	4				
10	6EK–14291–00	BRACKET 1 SUPPORT 1	1	1				
11	99590–10114	.PIN, DOWEL .GOUJON, D'ASSEMBLAGE	2	2				
12	90105–08M87	BOLT, FLANGE BOULON, A COLLERETTE	2	2				
13	6P2–24170–00	CANISTER ASSY BANDE, RASERVOIR A ESSENCE	1	1				
14	6FP–2419E–01	COVER, CANISTER COUVERCLE	1	1				
15	6EK–2134X–10	BRACKET, CANISTER SUPPORT	1	1				
16	90480–10M23	GROMMET PASSE-FIL	2	2				
17	90387–06289	COLLAR COLLERETTE	2	2				
18	90119–06309	BOLT, WITH WASHER BOULON, AVEC RONDELLE	2	2				
19	90464–07209	CLAMP BRIDE	2	2				

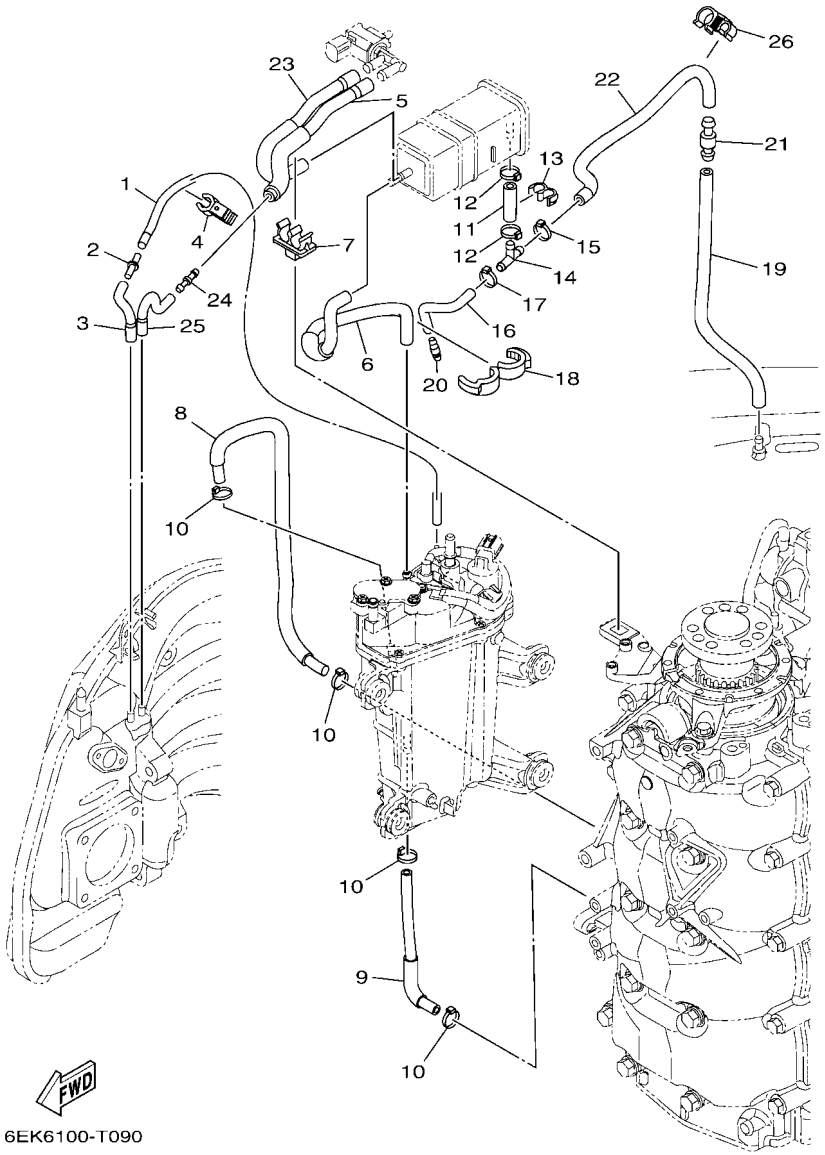

FIG. 9 INTAKE 3 — ADMISSION 3

REF. NO.	PART NO. N° PIECES	DESCRIPTION DESCRIPTION	6EKC	6ELC				REMARKS REMARQUES
1	6EK–13532–00	HOSE, VACUUM SENSING 3 DURITE 3	1	1				
2	5PS–14568–00	JOINT JOINT	1	1				
3	6EK–1475G–00	PIPE 4 DURITE 4	1	1				
4	90464–12006	CLAMP BRIDE	1	1				
5	6EK–2416A–10	HOSE DURITE	1	1				
6	6EK–1475A–00	PIPE 1 DURITE 1	1	1				
7	90464–11012	CLAMP BRIDE	1	1				
8	6EK–12576–00	HOSE 1 TUYAU 1	1	1				
9	6EK–12577–00	HOSE 2 TUYAU 2	1	1				
10	90465–11M10	CLAMP BRIDE	4	4				
11	6AW–13545–10	HOSE 1 DURITE 1	1	1				
12	90465–11M10	CLAMP BRIDE	2	2				
13	90464–10M57	CLAMP BRIDE	1	1				
14	688–24378–00	PIPE, JOINT 3 DURITE RACCORDEMENT 3	1	1				
15	90465–11M10	CLAMP BRIDE	1	1				
16	6EK–13546–00	HOSE 2 DURITE 2	1	1				
17	90465–11M10	CLAMP BRIDE	1	1				
18	90464–16001	CLAMP BRIDE	1	1				
19	6EK–13547–00	HOSE 3 DURITE 3	1	1				
20	6E5–21744–00	BREATHER RENIFLARD	1	1				
21	63D–21744–00	BREATHER RENIFLARD	1	1				
22	6EK–13548–01	HOSE, AIR 4 DURITE, A AIR 4	1	1				
23	6EK–1475F–10	PIPE 3 DURITE 3	1	1				
24	6EK–14989–00	ORIFICE, AIR VENT OR1F1CE	1	1				
25	6EK–1475G–00	PIPE 4 DURITE 4	1	1				
26	90464–12010	CLAMP BRIDE	1	1				

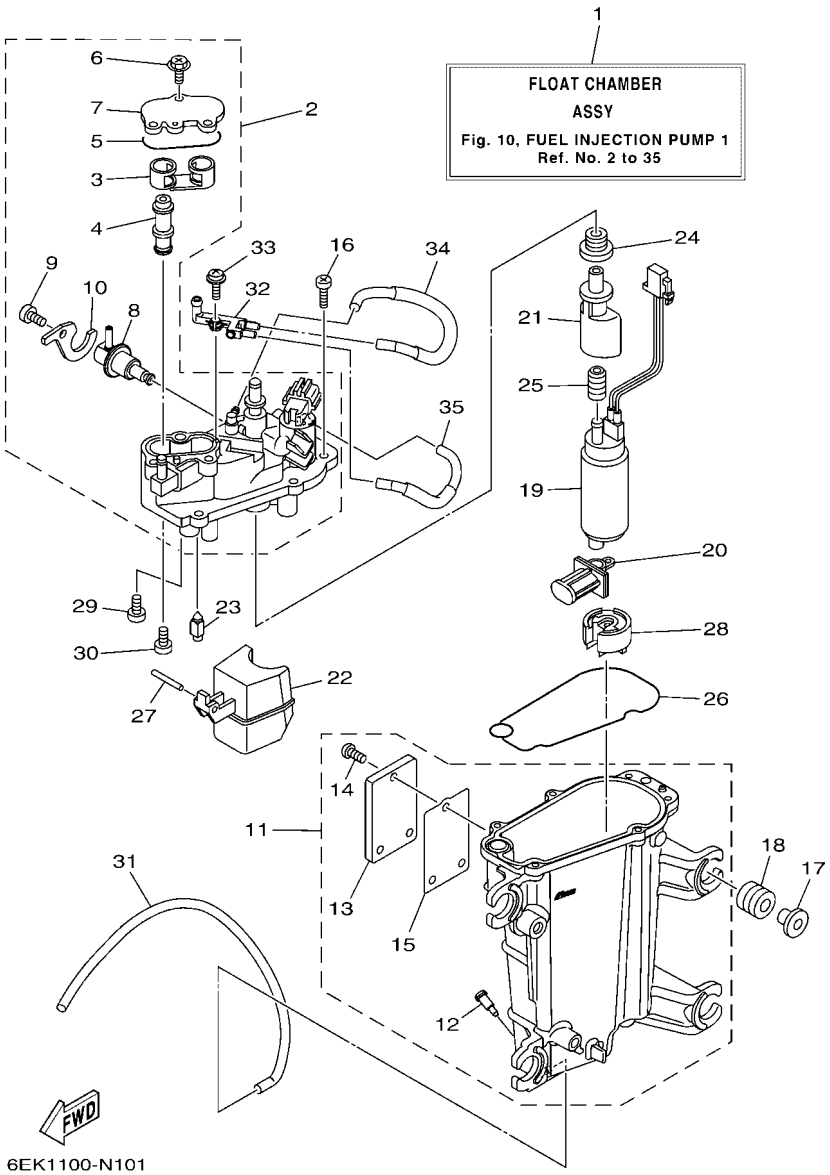

FIG. 10 FUEL INJECTION PUMP 1 — POMPE A INJECTEUR 1

REF. NO.	PART NO. N° PIECES	DESCRIPTION DESCRIPTION	6EKC	6ELC				REMARKS REMARQUES
1	6EK–14180–04	FLOAT CHAMBER ASSY CUVE DE FLOTTEUR	1	1				
2	6EK–14182–00	COVER, FLOAT CHAMBER COUVERCLE, CUVE DE FLOTTEUR	1	1				
3	6EK–24478–00	.JOINT .JOINT	1	1				
4	6EK–24481–00	.PLUG .COUVERCLE	1	1				
5	6CB–13016–00	.O-RING .JOINT TORIQUE	1	1				
6	6CB–14216–00	.SCREW .VIS	3	3				
7	6CB–24217–00	.COVER .COUVERCLE	1	1				
8	6CB–13906–01	.REGULATOR, PRESSURE .REGULATEUR DE PRESSION	1	1				
9	6CB–14564–00	.SCREW .VIS	1	1				
10	6DA–14146–00	.PLATE .PLAQUE	1	1				
11	6EK–14181–00	BODY, FLOAT CHAMBER 1 CORPS, CUVE DE FLOTTEUR 1	1	1				
12	6P2–14191–00	.PLUG, DRAIN .PLOT, VIDANGE	1	1				
13	6EK–24452–00	.COVER .COUVERCLE	1	1				
14	6K8–14591–10	.SCREW .VIS	3	3				
15	6CB–24482–00	.GASKET 1 .JOINT 1	1	1				
16	63P–14567–00	SCREW VIS	6	6				
17	63P–13716–00	COLLAR COLLERETTE	4	4				
18	6CB–13593–00	DAMPER AMORTISSEUR	4	4				
19	68V–13907–22	FUEL PUMP COMP. POMPE A CARBURANT COMP.	1	1				
20	63P–13915–00	FILTER FILTRE	1	1				
21	6KA–13132–00	JOINT RACCORD	1	1				
22	6CB–14985–00	FLOAT FLOTTEUR	1	1				
23	6CB–14546–00	VALVE, NEEDLE POINTEAU	1	1				
24	6LH–1447B–00	BUSH 1 DOUILLE 1	1	1				
25	6AW–13781–00	DAMPER, PUMP AMORTISSEUR, POMPE	1	1				
26	6CB–14984–00	GASKET, FLOAT CHAMBER JOINT, CUVE DE FLOTTEUR	1	1				
27	6P2–14386–00	PIN, FLOAT AXE, FLOTTEUR	1	1				

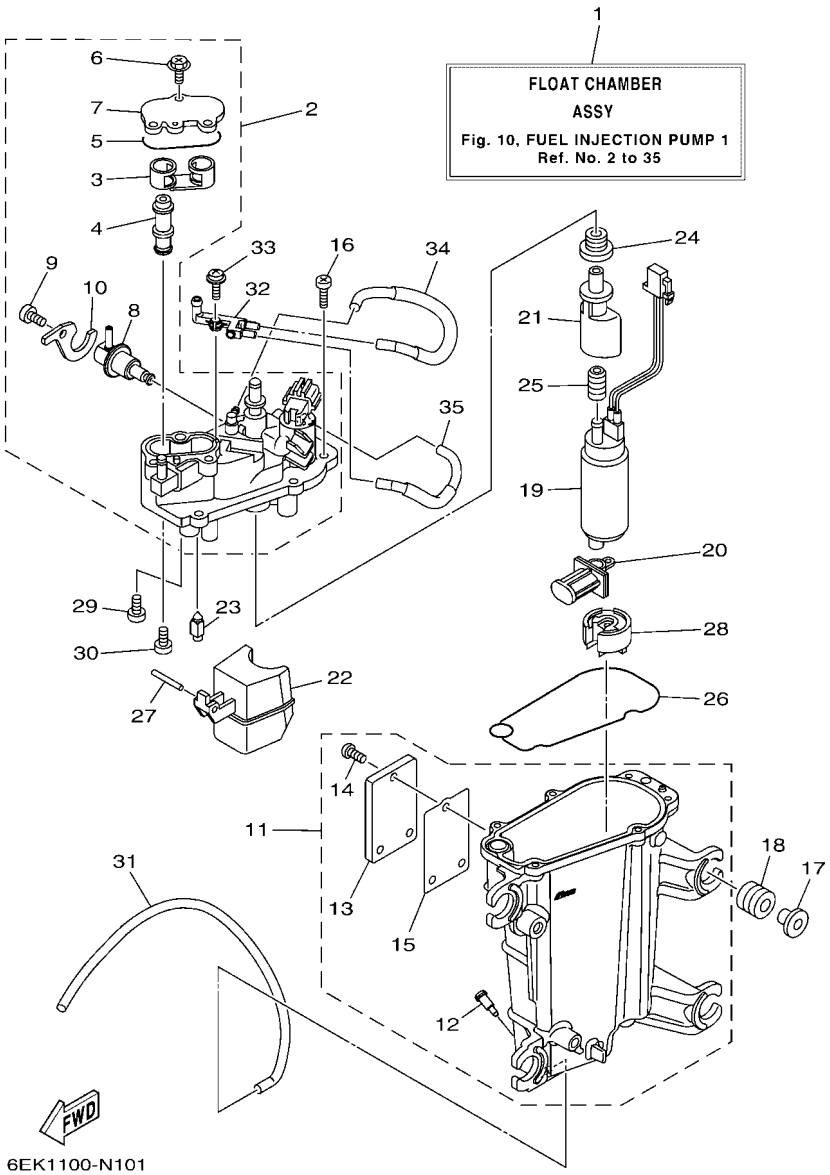

FIG. 10 FUEL INJECTION PUMP 1 — POMPE A INJECTEUR 1

REF. NO.	PART NO. N° PIECES	DESCRIPTION DESCRIPTION	6EKC	6ELC				REMARKS REMARQUES
28	6AW–13784–00	COVER, PUMP COUVERCLE, POMPE	1	1				
29	4SV–24453–00	SCREW VIS	1	1				
30	98507–04008	SCREW, PAN HEAD VIS, TETE TRONCONIQUE	1	1				
31	6AW–14197–00	PIPE DURITE	1	1				
32	68V–24379–10	PIPE, JOINT 4 DURITE RACCORDEMENT 4	1	1				
33	68V–14216–00	SCREW VIS	1	1				
34	6EK–1475H–00	PIPE 5 DURITE 5	1	1				
35	6EK–1475J–00	PIPE 6 DURITE 6	1	1				

FIG. 11 FUEL INJECTION PUMP 2 POMPE A INJECTEUR 2

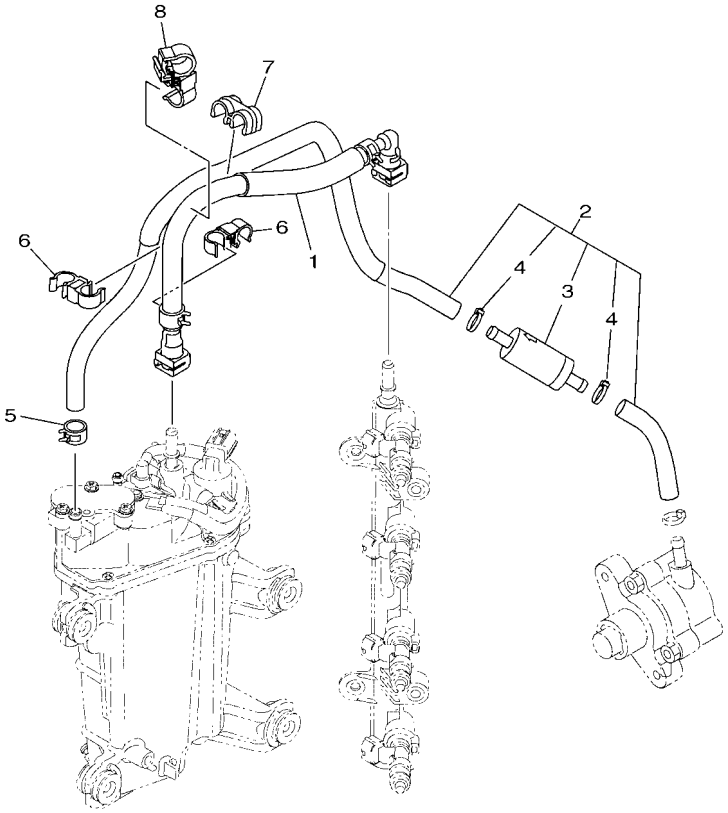

6EK1100-N110

REF. NO.	PART NO. N° PIECES	DESCRIPTION DESCRIPTION	6EKC	6ELC				REMARKS REMARQUES
1	6EK–2450B–01	FUEL HOSE ASSY DURITE A ESSENCE	1	1				
2	6EK–24330–02	FUEL PIPE ASSY DURITE A ESSENCE	1	1				
3	6C5–24251–01	.STRAINER 1 .FILTRE 1	1	1				
4	90465–11M10	.CLAMP .BRIDE	2	2				
5	90467–120A7	CLIP JONC	1	1				
6	90464–12009	CLAMP BRIDE	2	2				
7	90464–12224	CLAMP BRIDE	1	1				
8	90464–12012	CLAMP BRIDE	1	1				

FIG. 12 EXHAUST ECHAPPEMENT

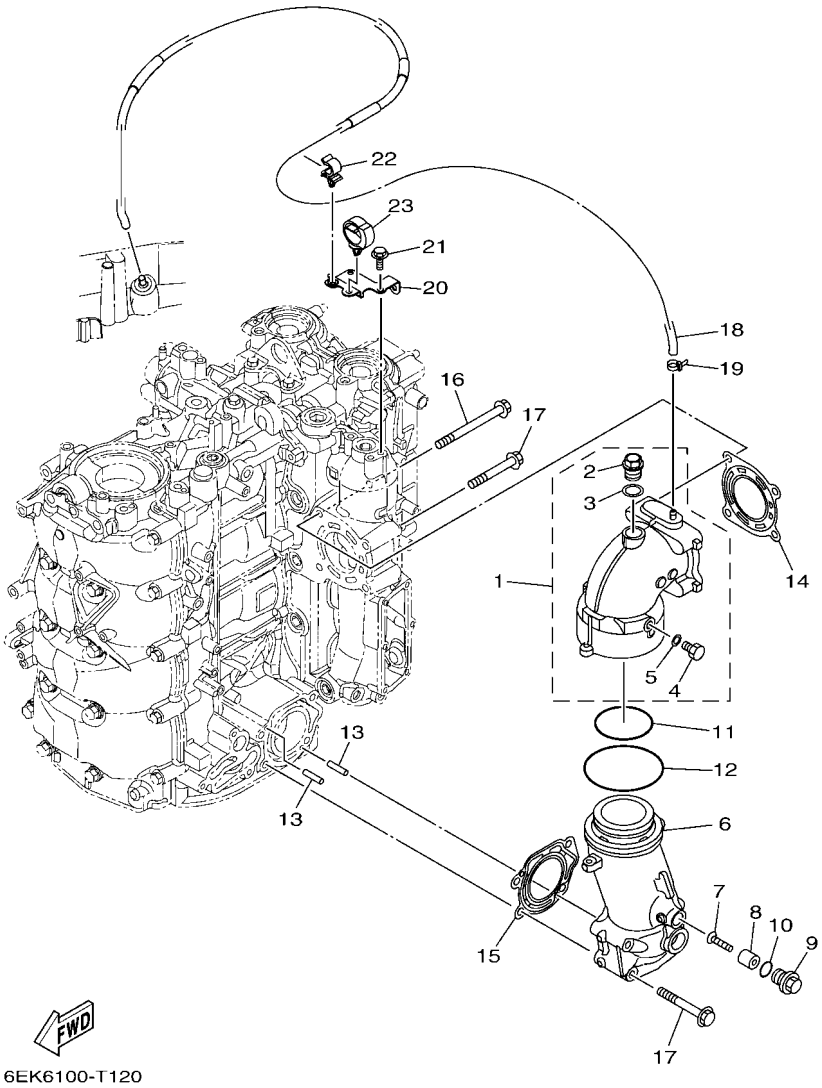

REF. NO.	PART NO. N° PIECES	DESCRIPTION DESCRIPTION	6EKC	6ELC				REMARKS REMARQUES
1	6EK–14615–10	JOINT, EXHAUST 1 JOINT D'ECHAPPEMENT	1	1				
2	90340–18M09	.PLUG, STRAIGHT SCREW .PLOT, FILETE DROIT	1	1				
3	90201–186F1	.WASHER, PLATE .RONDELLE, PLATE	1	1				
4	97D95–08014	.BOLT, HEXAGON DEEP RECESS .VIS HEXAGONAL	1	1				
5	90430–08143	.GASKET .JOINT	1	1				
6	6EK–14625–00	JOINT, EXHAUST 2 JOINT D'ECHAPPEMENT	1	1				
7	98780–05025	SCREW, FLAT HEAD VIS A TETE FRAISEE	1	1				
8	6EK–11325–00	ANODE ANODE	1	1				
9	6G8–11197–A0	PLUG, BLIND PLOT, BORGNE	1	1				
10	93210–13M63	O-RING JOINT TORIQUE	1	1				
11	93210–64001	O-RING JOINT TORIQUE	1	1				
12	93210–84001	O-RING JOINT TORIQUE	1	1				
13	91690–50014	PIN, SPRING AGRAFFE	2	2				
14	6EK–41114–01	GASKET, EXHAUST OUTER COVER JOINT, COUVERCLE D'ECHAPPEMENT	1	1				
15	6EK–41124–01	GASKET, EXHAUST OUTER COVER JOINT, COUVERCLE D'ECHAPPEMENT	1	1				
16	90105–08247	BOLT, FLANGE BOULON, A COLLERETTE	2	2				
17	90105–08220	BOLT, FLANGE BOULON, A COLLERETTE	6	6				
18	6EM–42542–00	PIPE TUYAU	1	1				
19	90465–11M10	CLAMP BRIDE	1	1				
20	6EK–82398–00	PLATE 3 PLAQUETTE 3	1	1				
21	95D95–06012	BOLT, FLANGE DEEP RECESS BOULON FIXATION	2	2				
22	90464–09129	CLAMP BRIDE	1	1				
23	90464–12183	CLAMP BRIDE	1	1				

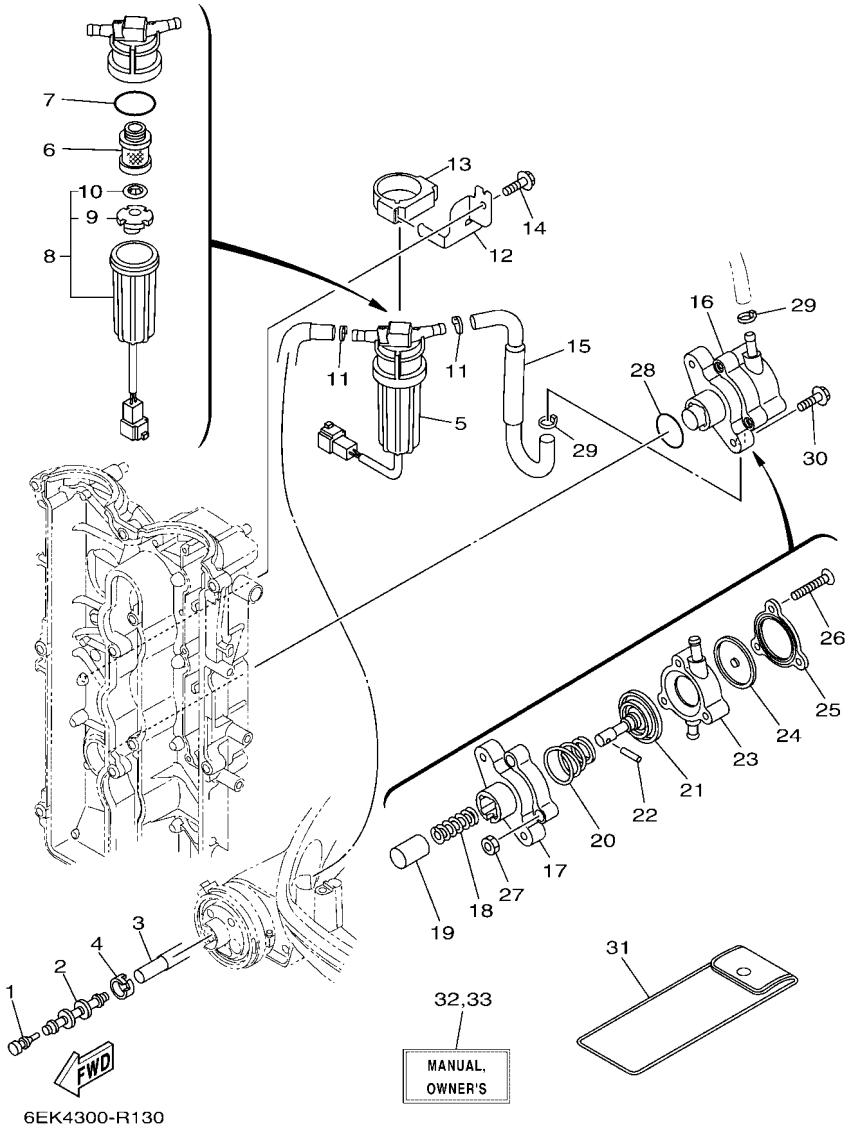

FIG. 13 FUEL 1 — CARBURANT 1

REF. NO.	PART NO. N° PIECES	DESCRIPTION DESCRIPTION	6EKC	6ELC				REMARKS REMARQUES
1	689–85547–01	DAMPER AMORTISSEUR	1	1				
2	6AW–24377–01	PIPE, JOINT 2 DURITE RACCORDEMENT 2	1	1				
3	6EK–24314–00	PIPE 4 DURITE 4	1	1				
4	6E5–24351–51	BAND 1 COLLIER 1	1	1				
5	6EK–24560–00	FILTER ASSY ENS FILTRE	1	1				
6	6D8–24563–00	.ELEMENT, FILTER .ELEMENT, FILTRE	1	1				
7	6D8–24564–00	.GASKET .JOINT	1	1				
8	6D8–24562–00	.CUP, FILTER .CUVETTE, FILTRE	1	1				
9	6D8–24469–00	..FLOAT, WATER LEVEL ..FLOTTEUR	1	1				
10	6D8–24519–00	..CLIP ..JONC	1	1				
11	90465–11M10	CLAMP BRIDE	2	2				
12	6EK–24566–00	BRACKET, FILTER SUPPORT, FILTRE	1	1				
13	6EK–24568–00	BAND, FILTER COLLIER, FILTRE	1	1				
14	95D95–06016	BOLT, FLANGE DEEP RECESS BOULON FIXATION	1	1				
15	6EK–24311–00	PIPE, FUEL 1 DURITE A ESSENCE	1	1				
16	6EK–24410–00	FUEL PUMP ASSY POMPE A ESSENCE	1	1				
17	68V–24412–00	.BODY 1 .CORPS 1	1	1				
18	68V–24454–00	.SPRING .RESSORT	1	1				
19	63P–13131–00	.PLUNGER .PLONGEUR	1	1				
20	63P–24423–00	.SPRING, DIAPHRAGM .RESSORT, DIAPHRAGME	1	1				
21	68V–24411–00	.DIAPHRAGM .DIAPHRAGME	1	1				
22	68V–24374–00	.PIN .GOUPILLE	1	1				
23	6EK–24413–00	.BODY 2 .CORPS 2	1	1				
24	68V–24471–10	.DIAPHRAGM .DIAPHRAGME	1	1				
25	6EK–24414–00	.BODY 3 .CORPS 3	1	1				
26	68V–24444–00	.SCREW .VIS	3	3				
27	68V–24149–00	.NUT .ECROU	3	3				

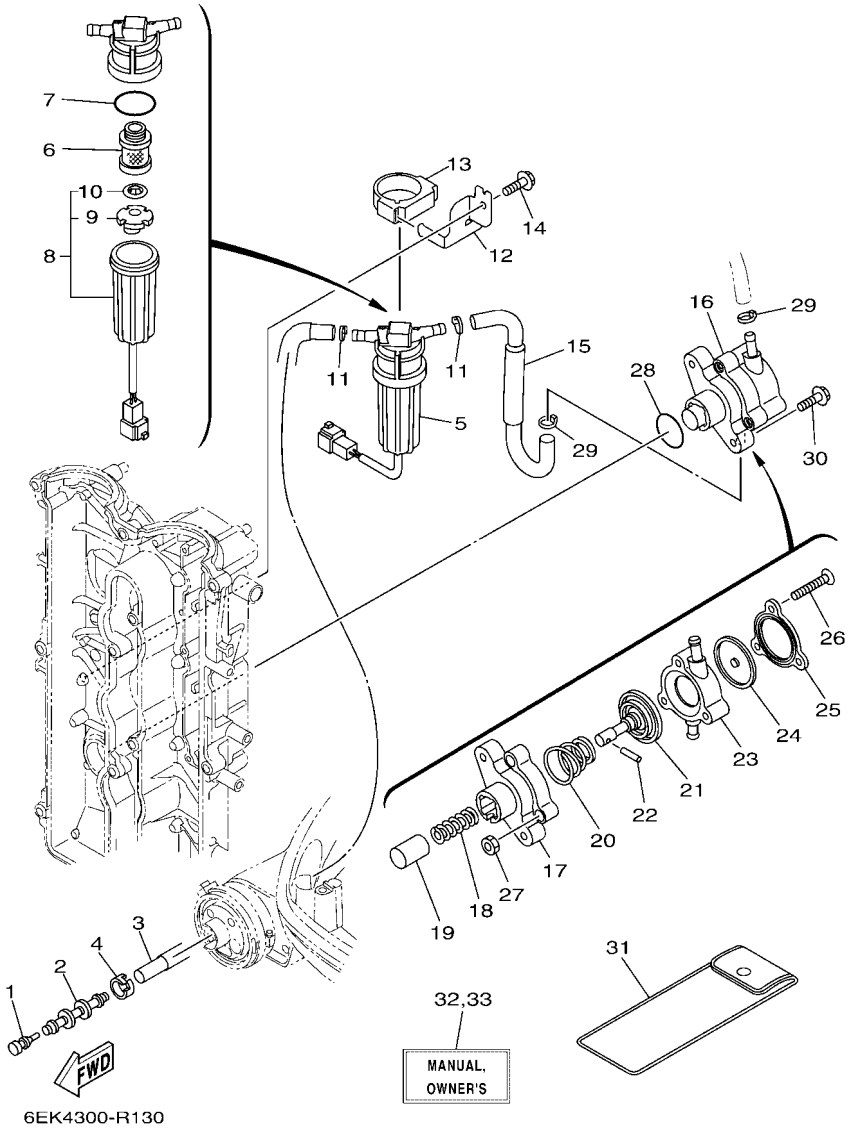

FIG. 13 FUEL 1 — CARBURANT 1

REF. NO.	PART NO. N° PIECES	DESCRIPTION DESCRIPTION	6EKC	6ELC				REMARKS REMARQUES
28	93210–30682	O-RING JOINT TORIQUE	1	1				
29	90465–11M10	CLAMP BRIDE	2	2				
30	90105–06208	BOLT, FLANGE BOULON, A COLLERETTE	2	2				
31	67F–28100–03	TOOL KIT TROUSSE A OUTILS	1	1				AP AP
32	6EK–28199–7A–E0	MANUAL,OWNER'S MANUEL D'UTILISATION	1	1				UR (E) UR (E)
	6EK–28199–7A–F0	MANUAL,OWNER'S MANUEL D'UTILISATION	1	1				UR (F) UR (F)
	6EK–28199–7A–S0	MANUAL,OWNER'S MANUEL D'UTILISATION	1	1				UR (ES) UR (ES)
	6EK–28199–7A–G0	MANUAL,OWNER'S MANUEL D'UTILISATION	1	1				UR (D) UR (D)
	6EK–28199–7A–D0	MANUAL,OWNER'S MANUEL D'UTILISATION	1	1				UR (NL) UR (NL)
	6EK–28199–7A–H0	MANUAL,OWNER'S MANUEL D'UTILISATION	1	1				UR (I) UR (I)
33	6EK–28199–8A–K0	MANUAL,OWNER'S MANUEL D'UTILISATION	1	1				UR (DK) UR (DK)
	6EK–28199–8A–R0	MANUAL,OWNER'S MANUEL D'UTILISATION	1	1				UR (GR) UR (GR)
	6EK–28199–8A–P0	MANUAL,OWNER'S MANUEL D'UTILISATION	1	1				UR (P) UR (P)
	6EK–28199–8A–N0	MANUAL,OWNER'S MANUEL D'UTILISATION	1	1				UR (N) UR (N)
	6EK–28199–8A–M0	MANUAL,OWNER'S MANUEL D'UTILISATION	1	1				UR (S) UR (S)
	6EK–28199–8A–L0	MANUAL,OWNER'S MANUEL D'UTILISATION	1	1				UR (SF) UR (SF)

FIG. 14 FUEL 2 — CARBURANT 2

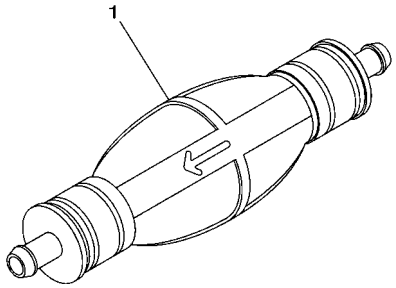

68VC100-L120

REF. NO.	PART NO. N° PIECES	DESCRIPTION DESCRIPTION	6EKC	6ELC				REMARKS REMARQUES
1	6YK–24360–73	PRIMER PUMP ASSY POMPE D'AMORCAGE	1	1				AP AP

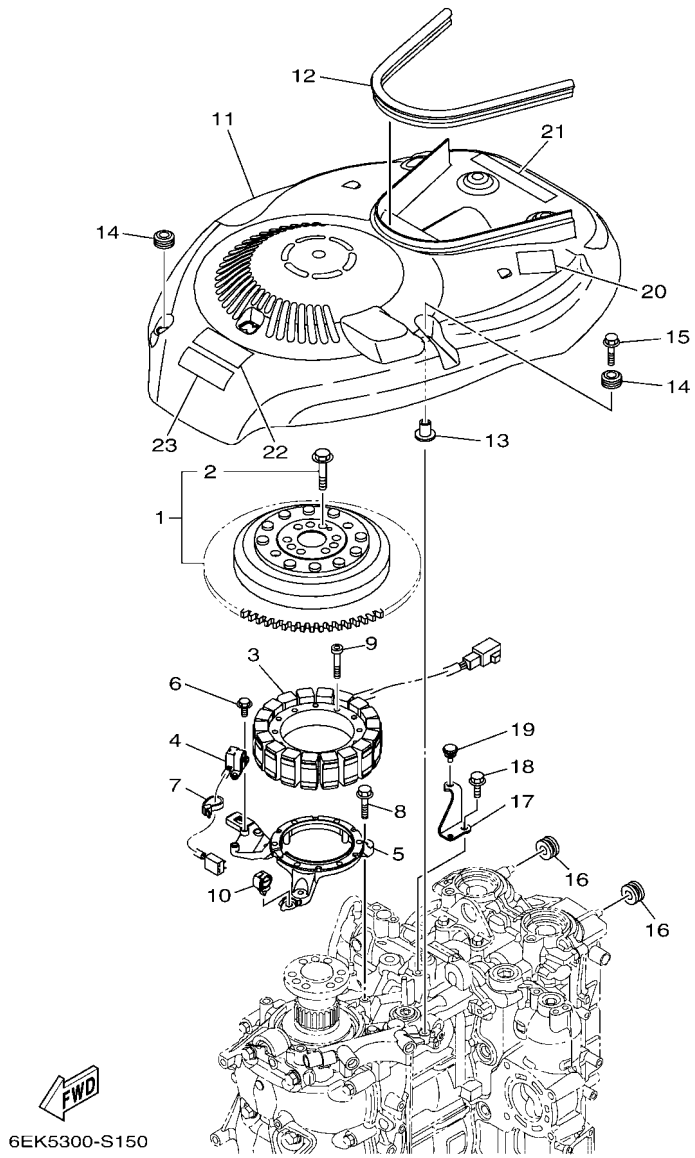

FIG. 15 GENERATOR GENERATRICE

REF. NO.	PART NO. N° PIECES	DESCRIPTION DESCRIPTION	6EKC	6ELC				REMARKS REMARQUES
1	6EK–W8145–02	ROTOR ASSY WITH BOLTS ROTOR COMPLET AVEC BOULON	1	1				
2	6EK–W9010–00	.BOLT SET .BOULON ENS.	1	1				
3	6EK–81410–00	STATOR ASSY STATOR COMPLET	1	1				
4	6CB–85580–01	COIL, PULSER BOBINE, PULSEUR	1	1				
5	6EK–85561–00	BASE, MAGNETO BASE, MAGNETO	1	1				
6	97595–05516	BOLT, WITH WASHER VIS HEXAGONAL AVC RONDELLE	2	2				
7	90465–13M97	CLAMP BRIDE	1	1				
8	95D95–06030	BOLT, FLANGE DEEP RECESS BOULON FIXATION	3	3				
9	91312–06035	BOLT, HEXAGON SOCKET HEAD BOULON, TETE HEXAGONALE CREUSE	6	6				
10	90464–13249	CLAMP BRIDE	1	1				
11	6EK–81337–01	COVER, FLYWHEEL COUVERCLE, VOLANT	1	1				
12	6EK–42617–00	DAMPER, FORM BOURRELET, CAOUTCHOUC	1	1				
13	90387–06119	COLLAR COLLERETTE	1	1				
14	6A0–82317–01	DAMPER, IGNITION COIL AMORTISSEUR, BOBINE D'ALLUM	2	2				
15	95D95–06030	BOLT, FLANGE DEEP RECESS BOULON FIXATION	1	1				
16	90480–12314	GROMMET PASSE-FIL	2	2				
17	6EK–8132G–00	PLATE PLAQUE	1	1				
18	95D95–06016	BOLT, FLANGE DEEP RECESS BOULON FIXATION	1	1				
19	90480–06M19	GROMMET PASSE-FIL	1	1				
20	6EK–83626–02	MARK 6 MARK 6	1	1				
21	6EK–13437–62	MARK, CAUTION MAKER	1	1				
22	6EE–81994–41	LABEL, SAFETY ETIQUETTE, SECURITE	1	1				
23	6EE–81994–51	LABEL, SAFETY ETIQUETTE, SECURITE	1	1				

FIG. 16 ELECTRICAL 1 — PARTIE ELECTRIQUE 1

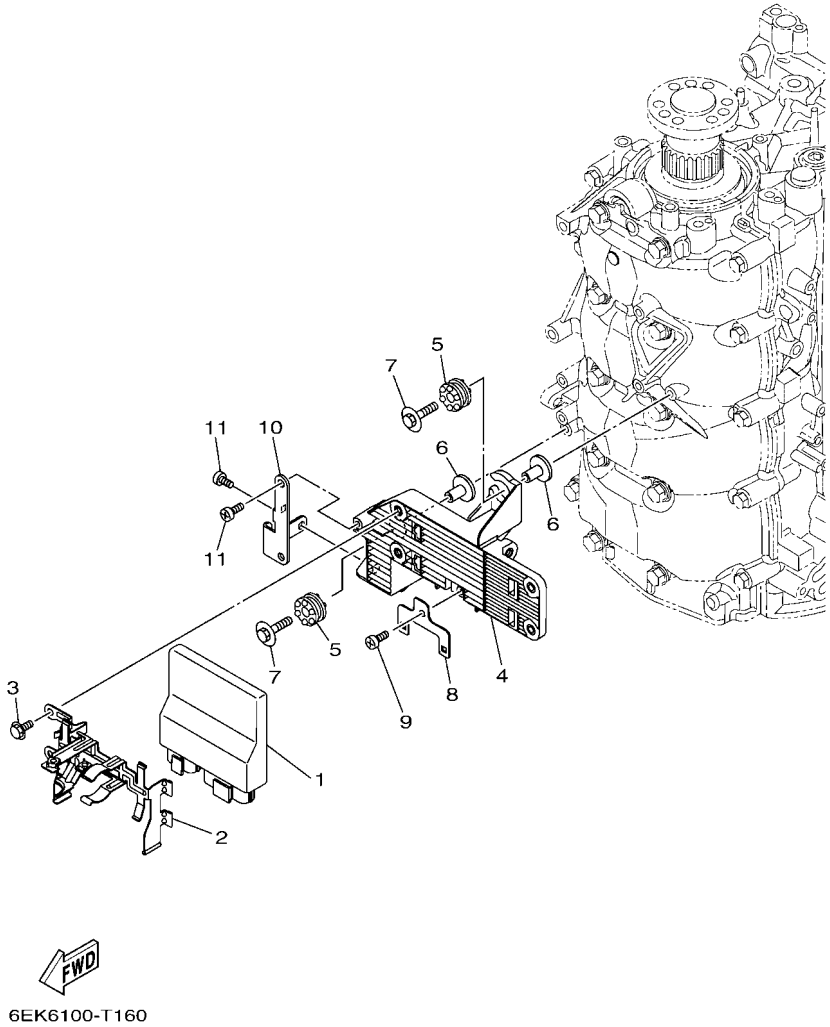

REF. NO.	PART NO. N° PIECES	DESCRIPTION DESCRIPTION	6EKC	6ELC				REMARKS REMARQUES
1	6EK–8591A–22	ENGINE CONTROL UNIT ASSY BLOC DE CONTROL	1	1				
2	6EK–8253C–00	SPRING, PLATE LOCK RESSORT, PLAQUE BUTEE	1	1				
3	95D95–06010	BOLT, FLANGE DEEP RECESS BOULON FIXATION	2	2				
4	6EK–81948–01	BRACKET SUPPORT	1	1				
5	60V–85564–00	GROMMET RONDELLE CAOUTCHOUC	2	2				
6	90387–06176	COLLAR COLLERETTE	2	2				
7	68F–85119–00	BOLT BOULON	2	2				
8	6C5–8257V–00	PLATE, CONNECTOR PLAQUE, CONNECTEUR	1	1				
9	97780–60620	SCREW, TAPPING VIS, TETE BOMBEE	1	1				
10	6EK–85548–00	HOLDER SUPPORT	1	1				
11	97780–60620	SCREW, TAPPING VIS, TETE BOMBEE	2	2				

FIG. 17 ELECTRICAL 2 — PARTIE ELECTRIQUE 2

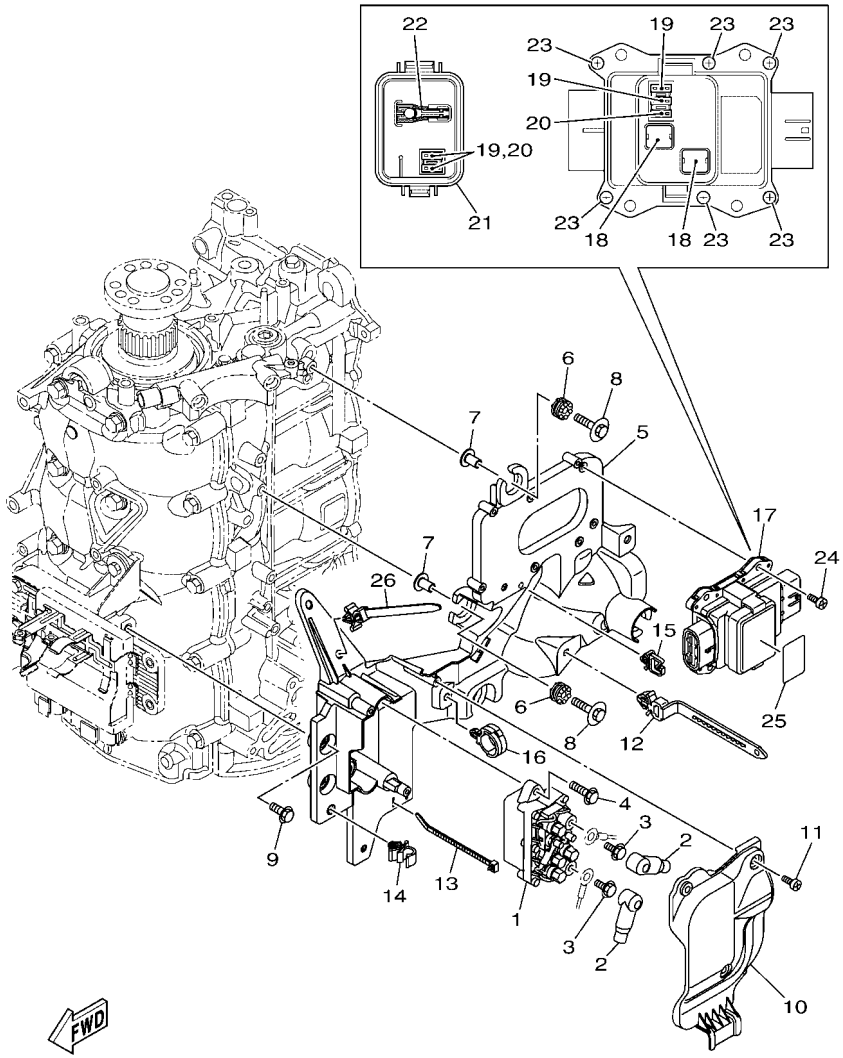

REF. NO.	PART NO. N° PIECES	DESCRIPTION DESCRIPTION	6EKC	6ELC				REMARKS REMARQUES
1	63P–W8195–00	RELAY ASSY RELAIS COMPLET	1	1				
2	682–82119–01	COVER, LEAD WIRE GARNITURE, FIL	2	2				
3	97E95–06610	BOLT, HEXAGON W/W DEEP RECESS VIS HEXAGONAL AVC RONDELLE	2	2				
4	97E95–06520	BOLT, HEXAGON W/W DEEP RECESS VIS HEXAGONAL AVC RONDELLE	2	2				
5	6EK–81952–10	HOLDER, RELAY SUPPORT, RELAIS	1	1				
6	60V–85564–00	GROMMET RONDELLE CAOUTCHOUC	4	4				
7	90387–06176	COLLAR COLLERETTE	4	4				
8	68F–85119–00	BOLT BOULON	4	4				
9	95D95–06016	BOLT, FLANGE DEEP RECESS BOULON FIXATION	2	2				
10	6EK–81942–10	COVER COUVERCLE	1	1				
11	90169–05M00	SCREW, TRUSS HEAD TAPPING VIS, TETE FRAISEE	3	3				
12	90465–13M76	CLAMP BRIDE	1	1				
13	90465–11M52	CLAMP BRIDE	1	1				
14	90464–10M32	CLAMP BRIDE	1	1				
15	90464–08004	CLAMP BRIDE	1	1				
16	90464–12183	CLAMP BRIDE	1	1				
17	6FP–82170–02	FUSE BOX ASSY BOITE A FUSIBLES	1	1				
18	6FP–82151–01	.FUSE (50A) .FUSIBLE (50A)	2	2				
19	6CB–82151–20	.FUSE (20A) .FUSIBLE (20A)	3	3				
20	6CB–82151–30	.FUSE (30A) .FUSIBLE (30A)	2	2				
21	6FP–85544–00	.COVER .COUVERCLE	1	1				
22	6CB–2812A–00	.PULLER, FUSE .TENDEUR, FUSIBLE	1	1				
23	6P2–82113–00	.SCREW (M3) .VIS (M3)	6	6				
24	97780–50620	SCREW, TAPPING VIS, TETE BOMBEE	4	4				
25	6EK–81919–11	GRAPHIC, REGULATOR ADHESIF, REGULATEUR	1	1				
26	90465–12M56	CLAMP BRIDE	1	1				

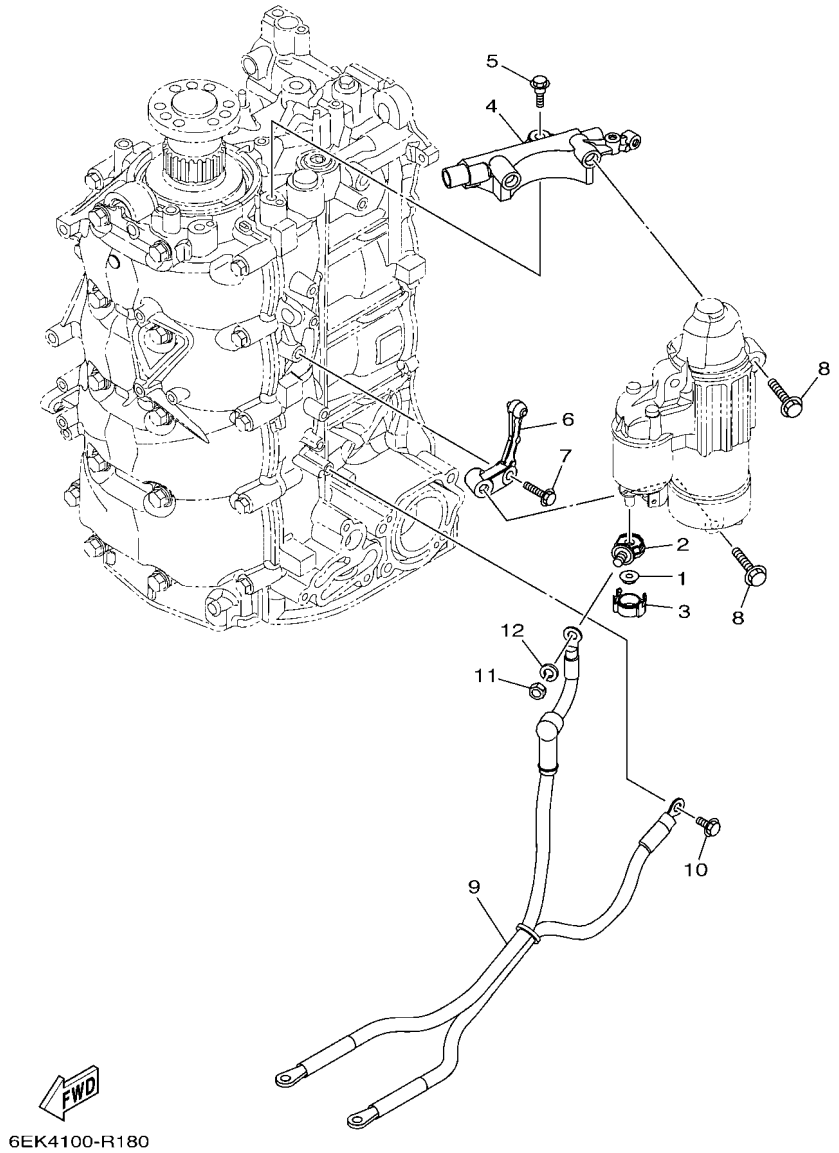

FIG. 18 ELECTRICAL 3 — PARTIE ELECTRIQUE 3

REF. NO.	PART NO. N° PIECES	DESCRIPTION DESCRIPTION	6EKC	6ELC				REMARKS REMARQUES
1	90179–08003	NUT ECROU	1	1				
2	60V–81925–00	TERMINAL BORNE	1	1				
3	68F–82582–00	CAP,1 COUVERCLE 1	1	1				
4	6EK–81822–01	BRACKET, STARTING MOTOR SUPPORT, DEMARREUR ELECTRIQUE	1	1				
5	90109–08240	BOLT BOULON	2	2				
6	6EK–81823–00	STAY, STARTING MOTOR SUPPORT	1	1				
7	95812–08030	BOLT, FLANGE BOULON	1	1				
8	90105–08248	BOLT, FLANGE BOULON, A COLLERETTE	3	3				
9	68V–82105–02	BATTERY CABLE CABLE DE BATTERIE	1	1				AP AP
10	90105–06M14	BOLT FLANGE BOULON, A COLLERETTE	1	1				AP AP
11	95333–08600	NUT ECROU	1	1				AP AP
12	92903–08100	WASHER, SPRING RONDELLE, GROWER	1	1				AP AP

FIG. 19 ELECTRICAL 4 — PARTIE ELECTRIQUE 4

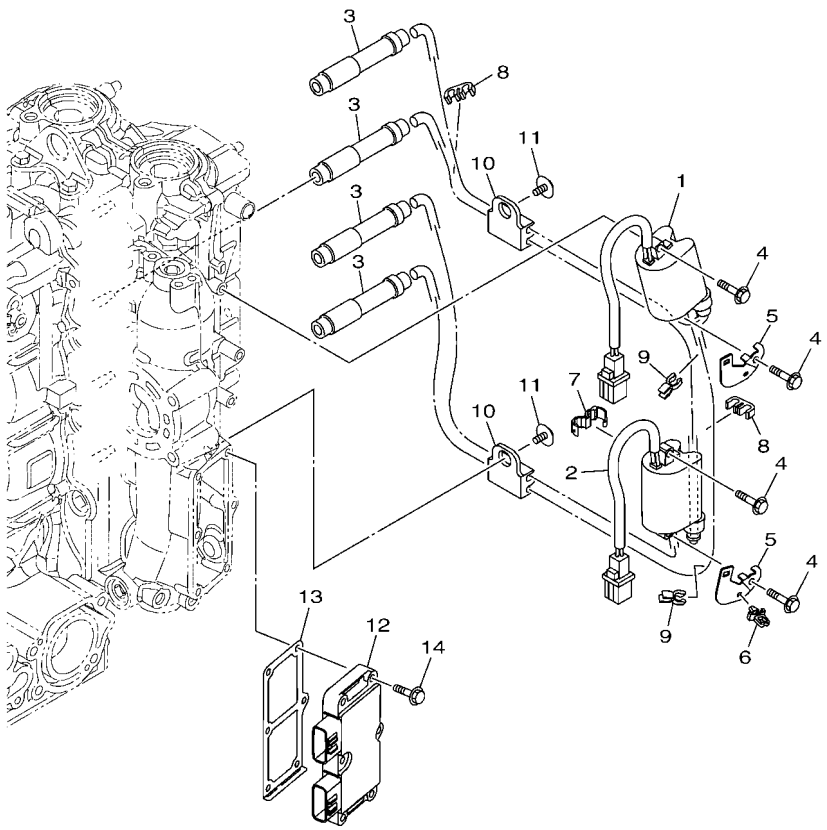

6EK6100-T190

REF. NO.	PART NO. N° PIECES	DESCRIPTION DESCRIPTION	6EKC	6ELC				REMARKS REMARQUES
1	6EK–82310–00	IGNITION COIL ASSY BOBINE D'ALLUMAGE	1	1				
2	6EK–82310–10	IGNITION COIL ASSY BOBINE D'ALLUMAGE	1	1				
3	6EK–82370–00	PLUG CAP ASSY ANTIPARASITE	4	4				
4	97E95–06525	BOLT, HEXAGON W/W DEEP RECESS VIS HEXAGONAL AVC RONDELLE	4	4				
5	6EK–82388–00	PLATE PLAQUETTE	2	2				
6	90464–06001	CLAMP BRIDE	1	1				
7	90464–13227	CLAMP BRIDE	1	1				
8	67F–82361–00	CLAMP, CORD COLLIER, CORDON	2	2				
9	90464–07M41	CLAMP BRIDE	2	2				
10	67F–82362–00	CLAMP, CORD 2 COLLIER, CABLE 2	2	2				
11	90119–06275	BOLT, WITH WASHER BOULON, AVEC RONDELLE	2	2				
12	6EK–81960–10	RECTIFIER & REGULATOR ASSY REDRESSEUR REGULATEUR CPLT	1	1				
13	6EK–81975–01	PLATE, RECTIFIER FITTING PLAQUE, FIXATION DU REDRESSEUR	1	1				
14	97E95–06530	BOLT, HEXAGON W/W DEEP RECESS VIS HEXAGONAL AVC RONDELLE	6	6				

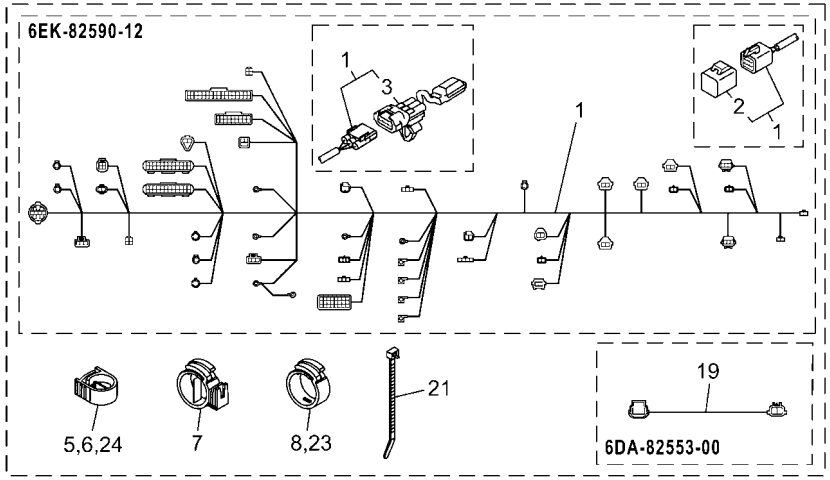

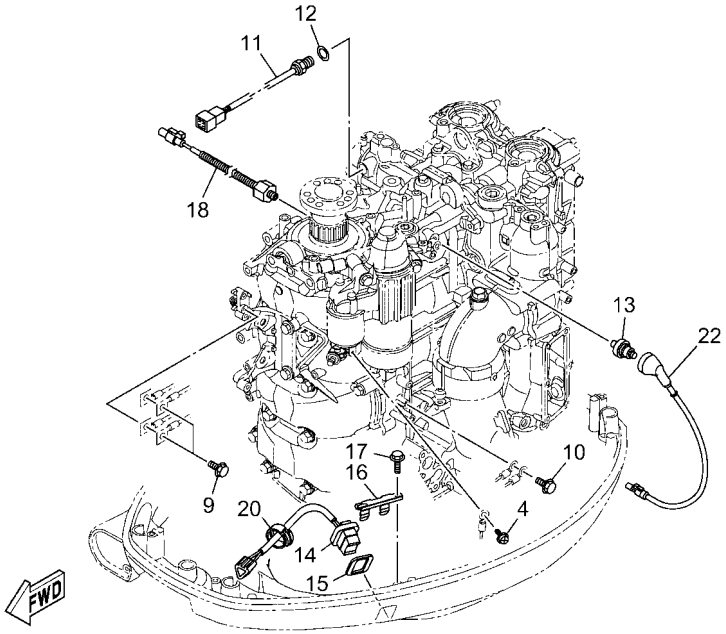

6ELA100-X200

FIG. 20 ELECTRICAL 5 — PARTIE ELECTRIQUE 5

REF. NO.	PART NO. N° PIECES	DESCRIPTION DESCRIPTION	6EKC	6ELC				REMARKS REMARQUES
1	6EK–82590–12	WIRE HARNESS ASSY FAISCEAU DE FILS COMPLET	1	1				
2	6Y8–82582–11	.CAP 1 (4PIN) .COUVERCLE 1 (4P)	1	1				
3	6EK–81980–01	.DIODE ASSY .REDRESSEUR 2	1	1				
4	97985–04308	SCREW, WITH WASHER VIS, AVEC RONDELLE	1	1				
5	90464–18004	CLAMP BRIDE	1	1				
6	90464–18004	CLAMP BRIDE	1	1				
7	90464–22005	CLAMP BRIDE	1	1				
8	90464–16001	CLAMP BRIDE	1	1				
9	97E95–06516	BOLT, HEXAGON W/W DEEP RECESS VIS HEXAGONAL AVC RONDELLE	2	2				
10	97E95–06516	BOLT, HEXAGON W/W DEEP RECESS VIS HEXAGONAL AVC RONDELLE	1	1				
11	6CJ–85790–00	THERMOSENSOR ASSY SENSITOMETRE	1	1				
12	90430–14115	GASKET JOINT	1	1				
13	68V–82504–00	OIL PRESSURE SWITCH ASSY CONTACTEUR DE PRESSION D'HUILE	1	1				
14	69J–82563–01	TRIM & TILT SWITCH ASSY INCLINER ET PARER COMMUTATEUR	1	1				
15	69J–82587–01	GASKET JOINT	1	1				
16	69J–83614–00	BRACKET SUPPORT	1	1				
17	90109–06M86	BOLT BOULON	2	2				
18	6CJ–85780–02	SENSOR, KNOCK SONDE DE COGNEMENT	1	1				
19	6DA–82553–00	EXTENSION, WIRE LEAD EXTENSION, FAISCEAU	1	1				
20	90464–16001	CLAMP BRIDE	1	1				
21	90465–13M18	CLAMP BRIDE	1	1				
22	6EK–82553–11	EXTENSION, WIRE LEAD EXTENSION, FAISCEAU	1	1				
23	90464–16001	CLAMP BRIDE	1	1				
24	90464–18004	CLAMP BRIDE	1	1				

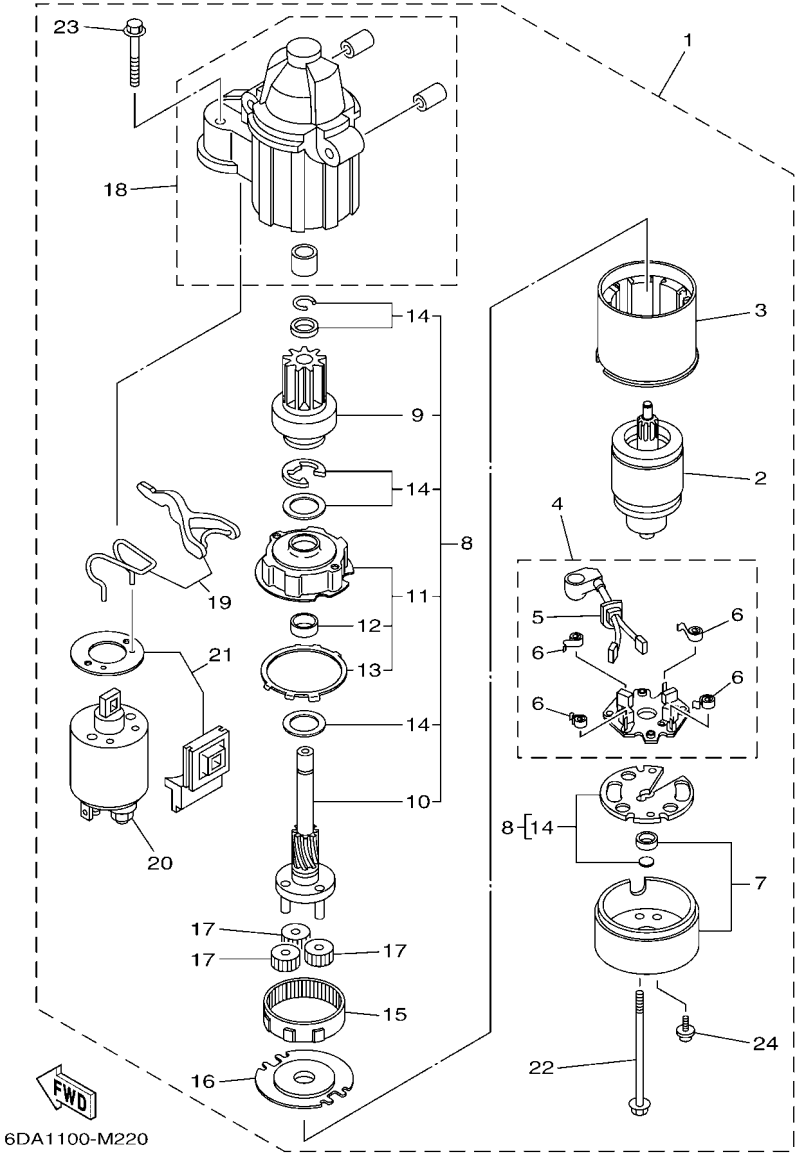

FIG. 21 STARTING MOTOR — DEMARREUR ELECTRIQUE

REF. NO.	PART NO. N° PIECES	DESCRIPTION DESCRIPTION	6EKC	6ELC				REMARKS REMARQUES
1	6EM–81800–02	STARTING MOTOR ASSY DEMARREUR ELECTRIQUE COMPLET	1	1				
2	67F–81850–00	.ARMATURE ASSY .INDUIT	1	1				
3	67F–81810–00	.STATOR ASSY .STATOR COMPLET	1	1				
4	69J–81840–11	.BRUSH HOLDER ASSY .SUPPORT DE CHARBON	1	1				
5	69J–81801–11	..BRUSH SET ..JEU DE BROSSE	1	1				
6	67F–81813–00	..SPRING, BRUSH ..RESSORT, DE CHARBON	4	4				
7	6CB–81820–00	.REAR BRACKET ASSY .SUPPORT ARRIERE COMPLET	1	1				
8	6CB–81807–00	.GEAR ASSY, STARTING MOTOR .PIGNON, DEMARREUR ELECTRIQUE	1	1				
9	6CB–81832–00	..CLUTCH, OVER RUN ..EMBRAYAGE, ROUE LIBRE	1	1				
10	6CB–81836–00	..SHAFT, PINION ..AXE, PIGNON	1	1				
11	67F–81821–00	..BRACKET, CENTER 1 ..SUPPORT, CENTRE 1	1	1				
12	67F–81841–00	...BEARING ...ROULEMENT	1	1				
13	67F–8183R–00	...GASKET ...JOINT	1	1				
14	6CB–81809–00	..WASHER KIT ..JEU DE RONDELLES	1	1				
15	67F–81891–00	.GEAR, RING .ROUE DENTEE	1	1				WITH 67F-8183R-00 WITH 67F-8183R-00
16	67F–81830–00	.BRACKET, CENTER 2 .SUPPORT, CENTRE 2	1	1				
17	60V–8183T–00	.GEAR, IDLER .PIGNON, INTERMEDIAIRE	3	3				
18	6CB–81842–00	.COVER .COUVERCLE	1	1				
19	6C5–81839–00	.LEVER ASSY .LEVIER COMPLET	1	1				
20	6EM–81941–01	.STARTER RELAY ASSY .LANCEUR RELAIS (ENS.)	1	1				
21	6C5–81869–00	.COVER, DUST .COUVERCLE, POUSSIERE	1	1				
22	6CB–81826–00	.BOLT .BOULON	2	2				
23	69J–81828–00	.BOLT 2 .BOULON 2	2	2				
24	67F–81846–00	.SCREW .VIS	2	2				

FIG. 22 BOTTOM COWLING 1 — CAPOT INFERIEUR 1

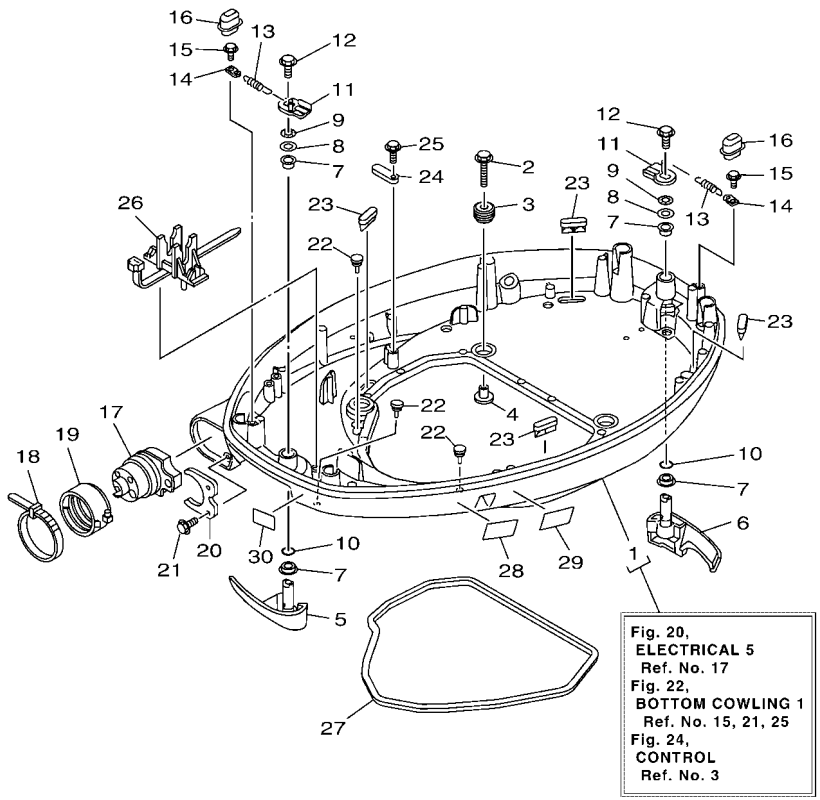

6EK7100-U220

REF. NO.	PART NO. N° PIECES	DESCRIPTION DESCRIPTION	6EKC	6ELC				REMARKS REMARQUES
1	6EK–42710–01	BOTTOM COWLING ASSY ENS. EMBASE	1	1				
2	90119–08187	BOLT, WITH WASHER BOULON, AVEC RONDELLE	4	4				
3	90480–22M15	GROMMET PASSE-FIL	4	4				
4	90387–08M37	COLLAR COLLERETTE	4	4				
5	6EK–42815–01–8D	LEVER, CLAMP 1 LEVIER, PRESSE 1	1	1				
6	6EK–42816–01–8D	LEVER, CLAMP 2 LEVIER, PRESSE 2	1	1				
7	90386–15M73	BUSH DOUILLE	4	4				
8	90201–156J2	WASHER, PLATE RONDELLE, PLATE	2	2				
9	90206–15M18	WASHER, WAVE RONDELLE, ONDULEE	2	2				
10	93210–13M63	O-RING JOINT TORIQUE	2	2				
11	6CB–42818–00	LEVER, CLAMP 4 LEVIER, PRESSE 4	2	2				
12	95D95–08012	BOLT, FLANGE DEEP RECESS BOULON FIXATION	2	2				
13	90506–22001	SPRING, TENSION RESSORT, TENSION	2	2				
14	66T–43144–00	HOOK, SPRING CROCHET	2	2				
15	90109–06M86	BOLT BOULON	2	2				
16	6EK–42728–01	CAP CAPUCHON	2	2				
17	6EK–42725–10	GROMMET PASSE-FIL	1	1				
18	90464–20258	CLAMP BRIDE	1	1				AP AP
19	68F–42753–00	FASTNER ATTACHE	1	1				AP AP
20	6CB–42761–00	STOPPER PLAQUETTE	1	1				
21	90109–06316	BOLT BOULON	2	2				
22	6H4–42748–01	GROMMET PASSE-FIL	3	3				
23	67F–42717–00	RUBBER, SEAL 2 JOINT EN CAOUTCHOUC 2	4	4				
24	6E5–82588–00	PLATE PLAQUE	1	1				
25	90109–06M81	BOLT BOULON	1	1				
26	68V–82594–00	CLAMP BRIDE	1	1				
27	6EK–42716–01	RUBBER SEAL 1 JOINT EN CAOUTCHOUC 1	1	1				

FIG. 22 BOTTOM COWLING 1 — CAPOT INFERIEUR 1

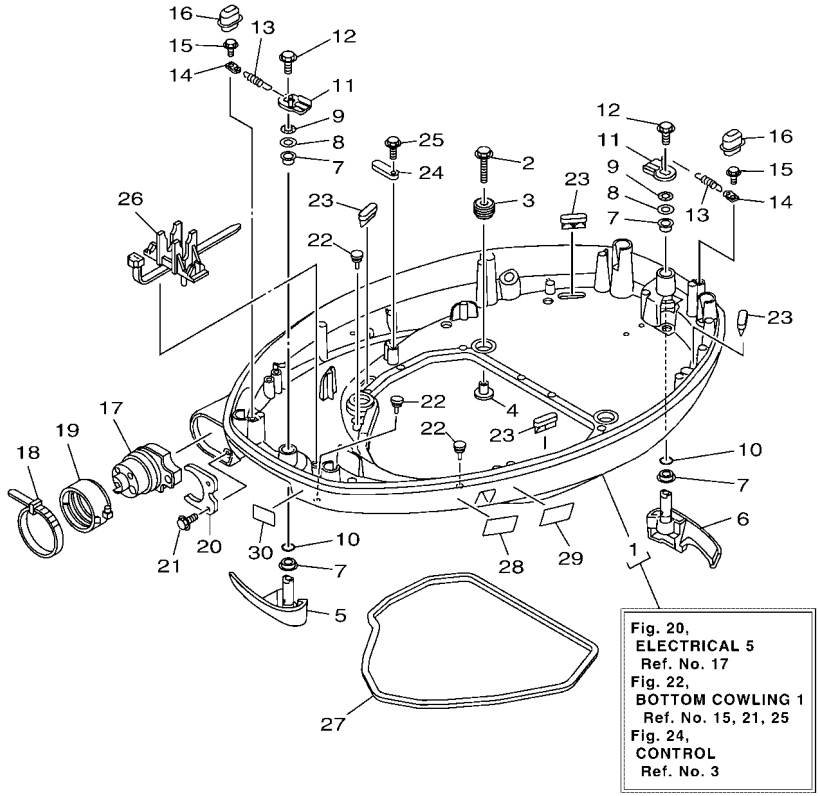

6EK7100-U220

REF. NO.	PART NO. N° PIECES	DESCRIPTION DESCRIPTION	6EKC	6ELC				REMARKS REMARQUES
28	6EE–42794–41	LABEL, WARNING (GENERAL) ETIQUETTE, AVERTISSEMENT	1	1				
29	6EE–42794–51	LABEL, WARNING (GENERAL) ETIQUETTE, AVERTISSEMENT	1	1				
30	6AH–81996–01	MARK MARQUE	1	1				

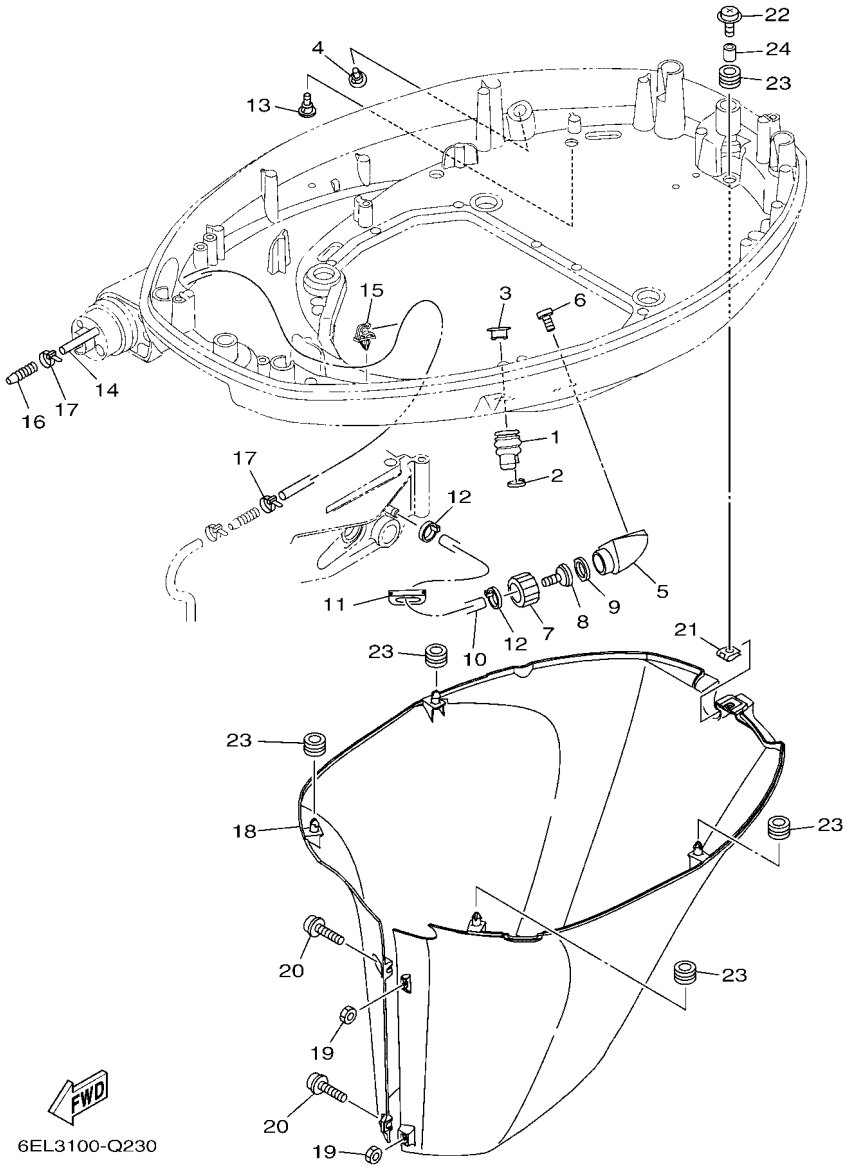

FIG. 23 BOTTOM COWLING 2 — CAPOT INFERIEUR 2

REF. NO.	PART NO. N° PIECES	DESCRIPTION DESCRIPTION	6EKC	6ELC				REMARKS REMARQUES
1	6H1–42726–31	GROMMET PASSE-FIL	1	1				
2	90465–11M10	CLAMP BRIDE	1	1				
3	6BG–42384–00	SEAL, CAP JOINT, CAPUCHON	1	1				
4	6P2–44391–00	NIPPLE, HOSE RACCORD D'ESSENCE	1	1				
5	6AW–12572–00	ADAPTER ADAPTATEUR	1	1				
6	97780–60520	SCREW, TAPPING VIS, TETE BOMBEE	2	2				
7	6R3–12581–00	JOINT, HOSE 1 JOINT DE TUYAU	1	1				
8	6R3–12582–00	JOINT, HOSE 2 RACCORD DE TUYAU 1	1	1				
9	6R3–12583–00	GASKET, HOSE JOINT JOINT	1	1				
10	6EK–42541–00	PIPE 1 TUYAU 1	1	1				
11	6AH–42726–01	GROMMET PASSE-FIL	1	1				
12	90465–11M10	CLAMP BRIDE	2	2				
13	6P2–44391–00	NIPPLE, HOSE RACCORD D'ESSENCE	1	1				
14	90445–073F9	HOSE (L1200) DURITE (L1200)	1	1				
15	90464–07259	CLAMP BRIDE	1	1				
16	6E5–83558–00	END, NIPPLE RACCORD DE NIPPLE	1	1				
17	90465–11M10	CLAMP BRIDE	2	2				
18	6EK–42741–00–8D	APRON, 1 CAPOT LATERAL 1	1	1				
19	95380–06600	NUT, HEXAGON ECROU	2	2				
20	90159–06M28	SCREW, WITH WASHER VIS, AVEC RONDELLE	2	2				
21	90183–061A8	NUT, SPRING ECROU, RESSORT	1	1				
22	90159–06053	SCREW, WITH WASHER VIS, AVEC RONDELLE	1	1				
23	90480–13M24	GROMMET PASSE-FIL	5	5				
24	90387–06M43	COLLAR COLLERETTE	1	1				

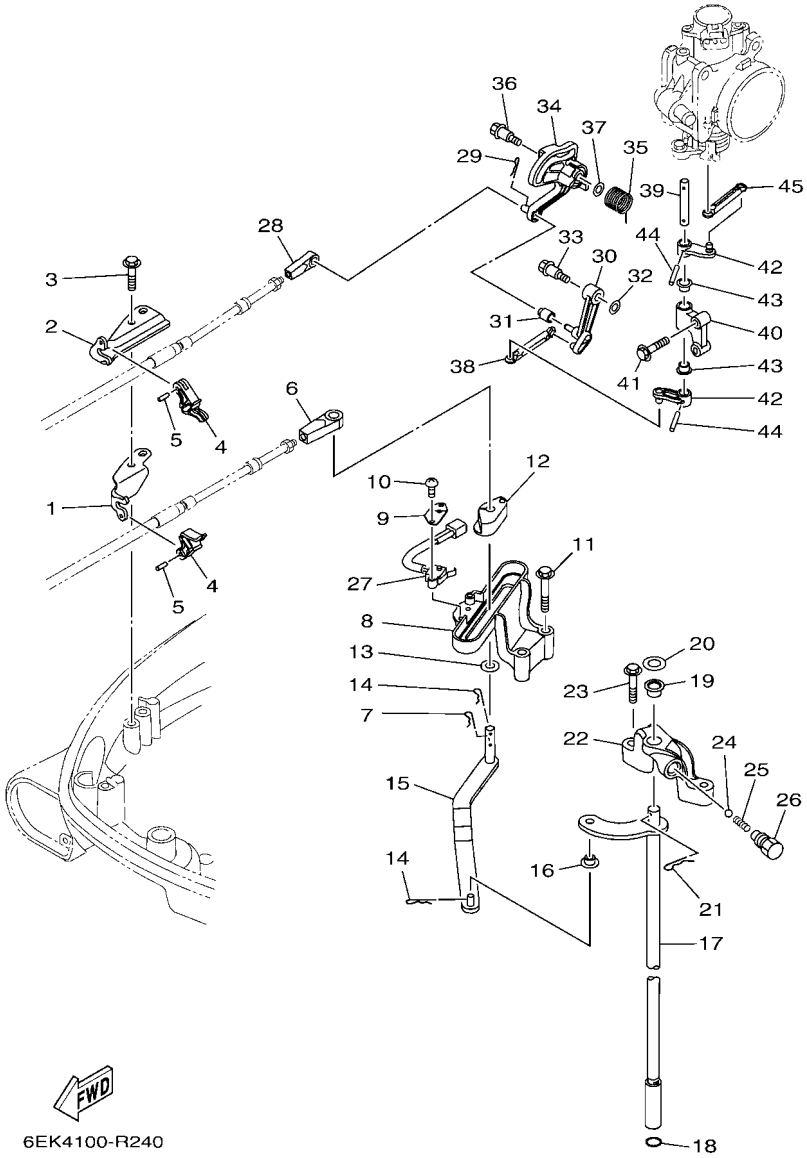

FIG. 24 CONTROL — COMMANDE

REF. NO.	PART NO. N° PIECES	DESCRIPTION DESCRIPTION	6EKC	6ELC				REMARKS REMARQUES
1	6EK–48531–01	BRACKET, REMOTE CONTROL 1 ETRIER 1, COMMANDE A DISTANCE	1	1				
2	6EK–48532–00	BRACKET, REMOTE CONTROL 2 ETRIER 2, COMMANDE A DISTANCE	1	1				
3	90109–06M81	BOLT BOULON	2	2				
4	6EK–48538–00	CLAMP, CABLE 1 COLLIER	2	2				
5	91690–30010	PIN, SPRING AGRAFFE	2	2				
6	6E5–48344–00	CABLE END, REMOTE CONTROL CHAPE CABLE	1	1				
7	90468–18008	CLIP JONC	1	1				
8	6EK–44117–01	BRACKET SUPPORT	1	1				
9	61A–82588–01	PLATE PLAQUE	1	1				
10	97985–04116	SCREW, WITH WASHER VIS, AVEC RONDELLE	2	2				
11	95D75–06040	BOLT, FLANGE DEEP RECESS BOULON FIXATION	2	2				
12	63P–44122–00	BUSHING, SHIFT ROD LEVER DOUILLE, LEVIER D'EMBRAYAGE	1	1				
13	90202–08M20	WASHER, PLATE RONDELLE, PLATE	1	1				
14	90468–18008	CLIP JONC	2	2				
15	6EK–44121–00	LEVER, SHIFT ROD LEVIER, TIGE D'INVERSION	1	1				
16	90386–06M12	BUSH DOUILLE	1	1				
17	6EK–44120–01	HANDLE GEAR SHIFT ASSY LEVIER D'EMBRAYAGE	1					L(20.3") L(20.3")
	6EK–44120–11	HANDLE GEAR SHIFT ASSY LEVIER D'EMBRAYAGE	1	1				X(25.3") X(25.3")
18	93210–09165	O-RING JOINT TORIQUE	1	1				
19	90386–10001	BUSH DOUILLE	1	1				
20	90201–11008	WASHER, PLATE RONDELLE, PLATE	1	1				
21	90468–180A0	CLIP JONC	1	1				
22	6EK–44118–00	BRACKET SUPPORT	1	1				
23	95D95–06030	BOLT, FLANGE DEEP RECESS BOULON FIXATION	2	2				
24	93501–04M02	BALL BILLE	1	1				
25	90501–12082	SPRING, COMPRESSION RESSORT, COMPRESSION	1	1				
26	648–42715–00	BUSHING 2 COUSSINET 2	1	1				

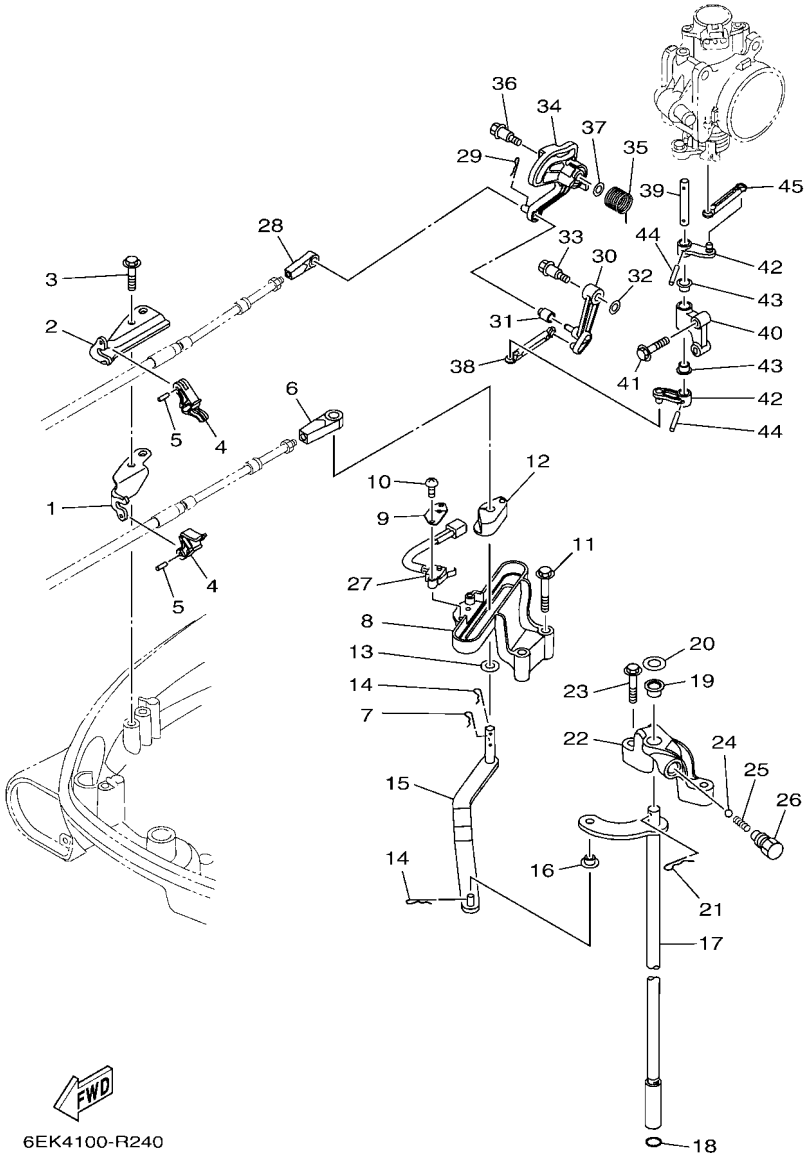

FIG. 24 CONTROL — COMMANDE

REF. NO.	PART NO. N° PIECES	DESCRIPTION DESCRIPTION	6EKC	6ELC				REMARKS REMARQUES
27	60V–8259F–01	SWITCH ASSY COMMUTATEUR	1	1				
28	6E5–48344–00	CABLE END, REMOTE CONTROL CHAPE CABLE	1	1				
29	90468–18008	CLIP JONC	1	1				
30	6EK–42154–00	LEVER, THROTTLE CONTROL LEVIER DE COMMANDE D'AVANCE	1	1				
31	68V–42171–00	BUSHING COUSSINET	1	1				
32	90201–06M05	WASHER, PLATE RONDELLE, PLATE	1	1				
33	90109–06288	BOLT BOULON	1	1				
34	6EK–41213–00	CAM, ACCEL. CAME, ACCELERATION	1	1				
35	6EK–44135–00	SPRING RESSORT	1	1				
36	90109–06288	BOLT BOULON	1	1				
37	90201–06M05	WASHER, PLATE RONDELLE, PLATE	1	1				
38	6EK–41237–10	JOINT, LINK RACCORD	1	1				
39	6EK–41635–00	SHAFT, LINK CONNECTING AXE, RACCORD	1	1				
40	6EK–41662–00	BRACKET 2 SUPPORT 2	1	1				
41	95D95–06030	BOLT, FLANGE DEEP RECESS BOULON FIXATION	2	2				
42	6EK–42157–00	LEVER, THROTTLE LEVIER DE AVANCE	2	2				
43	90386–10001	BUSH DOUILLE	2	2				
44	91690–30018	PIN, SPRING AGRAFFE	2	2				
45	6EK–41237–00	JOINT, LINK RACCORD	1	1				

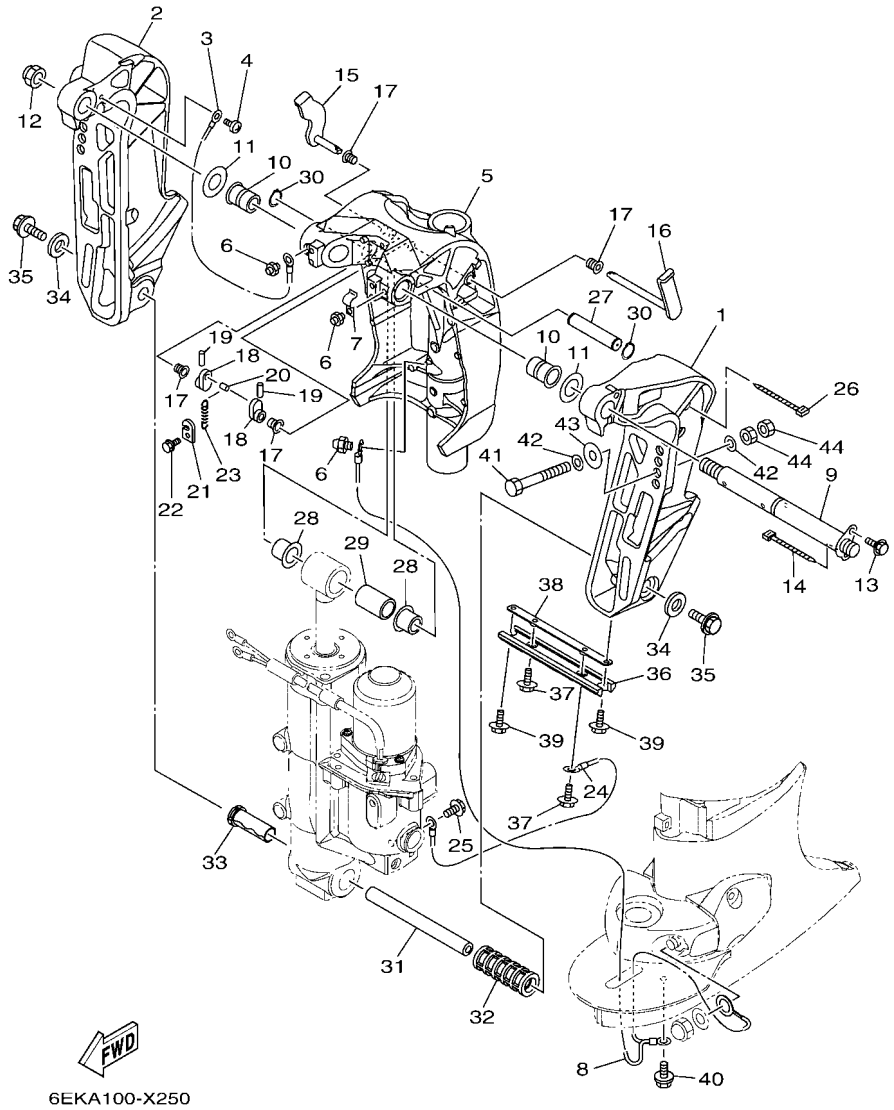

FIG. 25 BRACKET 1 SUPPORT 1

REF. NO.	PART NO. N° PIECES	DESCRIPTION DESCRIPTION	6EKC	6ELC				REMARKS REMARQUES
1	6EK–43111–00–8D	BRACKET, CLAMP 1 PRESSE 1	1	1				
2	6EK–43112–00–8D	BRACKET, CLAMP 2 PRESSE 2	1	1				
3	6E5–82148–00	WIRE, LEAD 4 FIL 4	1	1				
4	97885–06008	SCREW, PAN HEAD VIS, A ENCOCHE	1	1				
5	6EK–43311–00–8D	BRACKET, SWIVEL 1 SUPPORT, PIVOT 1	1					L(20.3") L(20.3")
	6EK–43311–10–8D	BRACKET, SWIVEL 1 SUPPORT, PIVOT 1	1	1				X(25.3") X(25.3")
6	93700–06002	NIPPLE, GREASE PION	3	3				
7	90465–08M63	CLAMP BRIDE	1	1				
8	66K–82149–00	WIRE, LEAD 3 FIL 3	1					L(20.3") L(20.3")
	68V–82149–30	WIRE, LEAD 3 FIL 3	1	1				X(25.3") X(25.3")
9	64E–43131–30	BOLT, CLAMP BRACKET BOULON, PRESSE	1	1				
10	90386–25M31	BUSH DOUILLE	2	2				
11	90201–26M59	WASHER, PLATE RONDELLE, PLATE	2	2				
12	90185–22M11	NUT, SELF-LOCKING ECROU,AUTO-BLOQUANT	1	1				
13	97E95–08520	BOLT, HEXAGON W/W DEEP RECESS VIS HEXAGONAL AVC RONDELLE	1	1				
14	90465–11M10	CLAMP BRIDE	1	1				
15	6EK–43181–00	LEVER, TILT STOP 1 LEVIER VERROUILLAGE RELEVAGE 1	1	1				
16	6EK–43185–00	LEVER, TILT STOP 2 LEVIER VERROUILLAGE RELEVAGE 2	1	1				
17	90386–10M16	BUSH DOUILLE	4	4				
18	6G5–43148–00	COLLAR, DISTANCE ENTRETOISE	2	2				
19	91690–30020	PIN, SPRING AGRAFFE	2	2				
20	90249–06M19	PIN GOUPILLE	1	1				
21	66T–43144–00	HOOK, SPRING CROCHET	1	1				
22	97E95–06512	BOLT, HEXAGON W/W DEEP RECESS VIS HEXAGONAL AVC RONDELLE	1	1				
23	90506–14M24	SPRING, TENSION RESSORT, TENSION	1	1				
24	6D8–82148–00	WIRE, LEAD 4 FIL 4	1	1				
25	97E95–06510	BOLT, HEXAGON W/W DEEP RECESS VIS HEXAGONAL AVC RONDELLE	1	1				

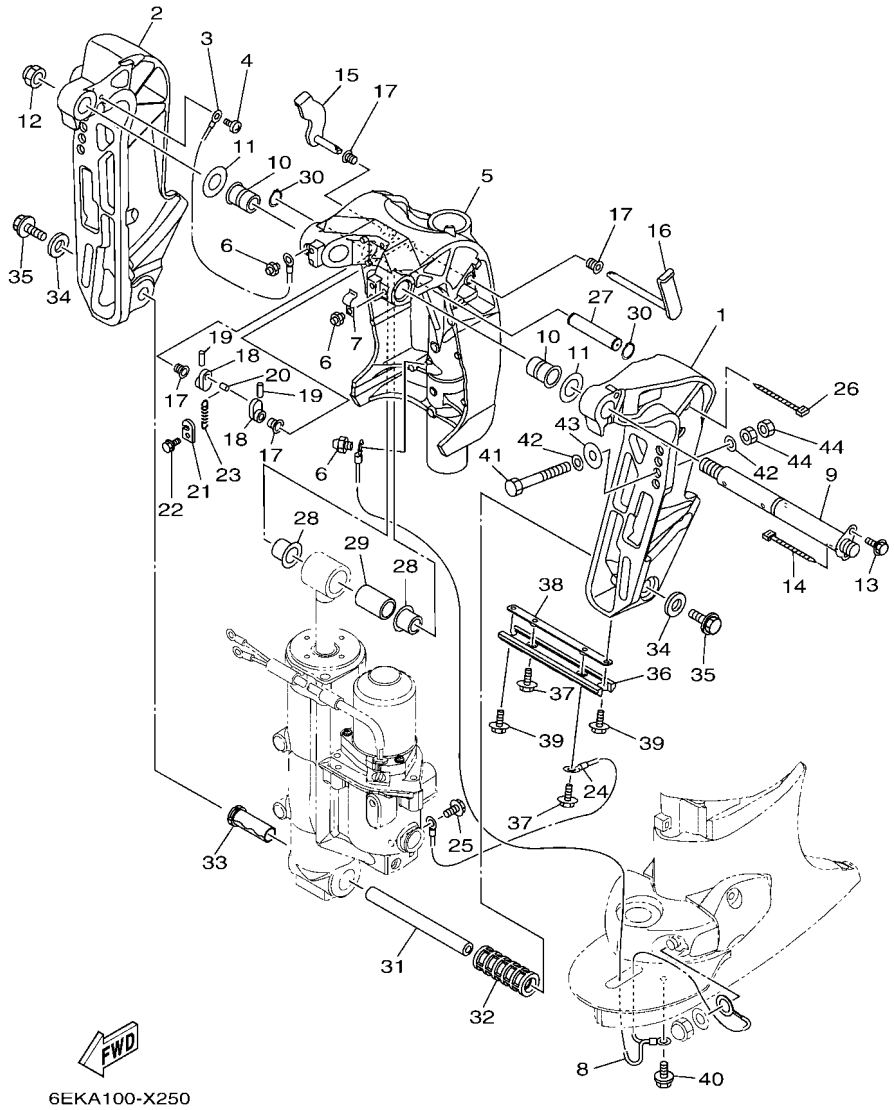

FIG. 25 BRACKET 1 — SUPPORT 1

REF. NO.	PART NO. N° PIECES	DESCRIPTION DESCRIPTION	6EKC	6ELC				REMARKS REMARQUES
26	90465–13M18	CLAMP BRIDE	1	1				
27	6EK–43126–00	PIN, UPPER SHOCK MOUNT AXE, SUPERIEUR AMORTISSEUR	1	1				
28	90386–18M35	BUSH DOUILLE	2	2				
29	90386–18001	BUSH DOUILLE	1	1				
30	93410–18M05	CIRCLIP CIRCLIP	2	2				
31	6EK–43818–00	PIN, LOWER SHOCK MOUNT AXE, INFERIEUR AMORTISSEUR	1	1				
32	6H1–43834–10	PIPE TUYAU	1	1				
33	90383–20001	BUSH, FORMED DOUILLE, MISE EN FORME	1	1				
34	90201–10060	WASHER, PLATE RONDELLE, PLATE	2	2				
35	90119–10054	BOLT, WITH WASHER BOULON, AVEC RONDELLE	2	2				
36	6H1–45251–03	ANODE ANODE	1	1				
37	90119–06276	BOLT, WITH WASHER BOULON, AVEC RONDELLE	2	2				
38	6EK–44536–00	PLATE 2 PLAQUETTE 2	1	1				
39	97E95–06616	BOLT, HEXAGON W/W DEEP RECESS VIS HEXAGONAL AVC RONDELLE	2	2				
40	95D95–06010	BOLT, FLANGE DEEP RECESS BOULON FIXATION	1	1				
41	90101–12065	BOLT (L:130MM) BOULON (L:130MM)	4					UR L(20.3") UR L(20.3")
	90101–12065	BOLT (L:130MM) BOULON (L:130MM)	2	2				UR X(25.3") UR X(25.3")
	90101–12066	BOLT (L:150MM) BOULON (L:150MM)	2	2				UR UR
42	90201–13M01	WASHER, PLATE RONDELLE, PLATE	8	8				
43	90201–12426	WASHER, PLATE RONDELLE, PLATE	4	4				
44	95380–12600	NUT ECROU	8	8				

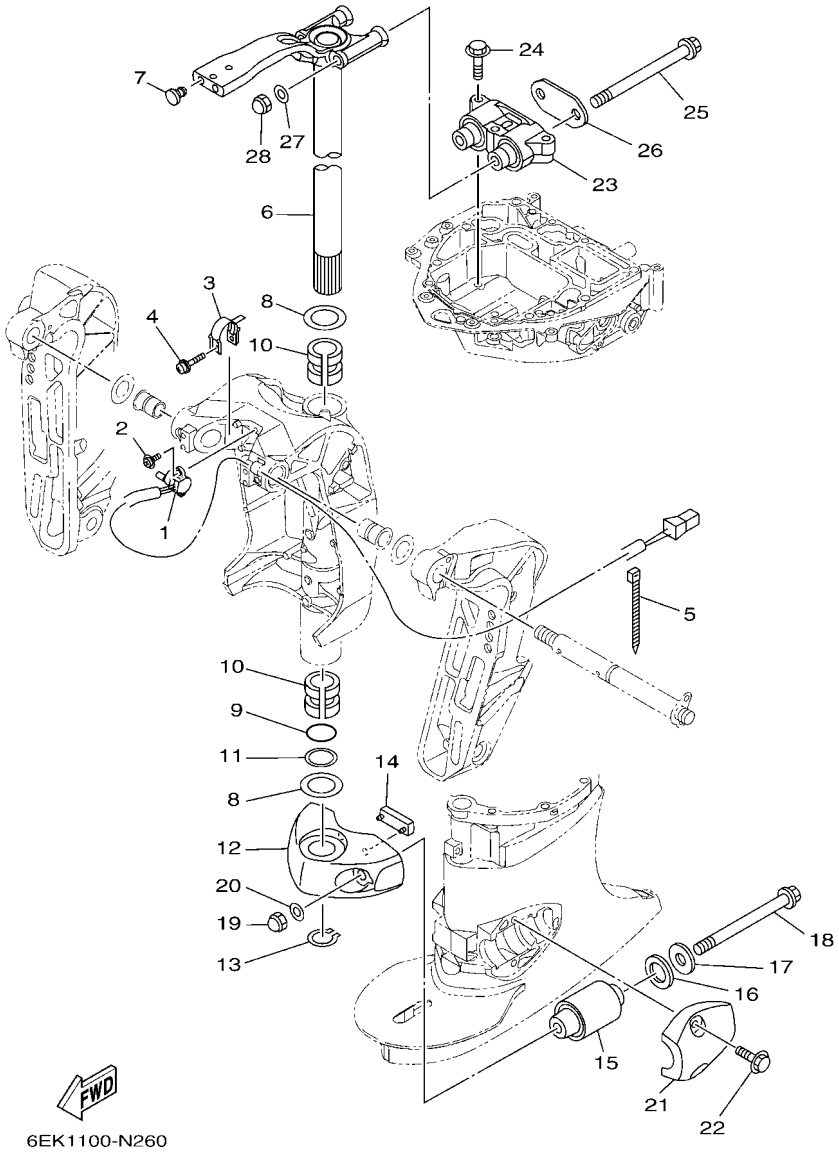

FIG. 26 BRACKET 2 — SUPPORT 2

REF. NO.	PART NO. N° PIECES	DESCRIPTION DESCRIPTION	6EKC	6ELC				REMARKS REMARQUES
1	67H–83672–02	TRIM SENDER INCLINER RACCORD	1	1				
2	97985–06216	SCREW, WITH WASHER VIS, AVEC RONDELLE	2	2				
3	64E–43139–11	CAM, TRIM SENDER VILEBREQUIN TRUM	1	1				
4	90159–05059	SCREW, WITH WASHER VIS, AVEC RONDELLE	1	1				
5	90465–11M10	CLAMP BRIDE	2	2				
6	6EK–42510–00–8D	STEERING BRACKET ASSY DIRECTION SUPPORT (ENS.)	1					L(20.3") L(20.3")
	6EK–42510–10–8D	STEERING BRACKET ASSY DIRECTION SUPPORT (ENS.)	1	1				X(25.3") X(25.3")
7	90338–08174	PLUG PLOT	2	2				
8	90201–38M60	WASHER, PLATE RONDELLE, PLATE	2	2				
9	93210–37MH7	O-RING JOINT TORIQUE	1	1				
10	90386–38M32	BUSH DOUILLE	2	2				
11	90202–40M47	WASHER, PLATE RONDELLE, PLATE	1	1				
12	6EK–44551–00–8D	HOUSING, LOWER MOUNT RUBBER 1 BOITIER, SILENT-BLOC INFERIEUR	1	1				
13	93410–36102	CIRCLIP CIRCLIP	1	1				
14	61A–44575–01	DAMPER, LOWER MOUNT RUBBER SILENT-BLOC, INFERIEUR	1	1				
15	63P–44555–00	MOUNT DAMPER, LOWER SIDE SILENT-BLOC, INFERIEUR LATERAL	2	2				
16	90202–32M19	WASHER, PLATE RONDELLE, PLATE	2	2				
17	90201–16M55	WASHER, PLATE RONDELLE, PLATE	2	2				
18	90105–14013	BOLT, FLANGE BOULON, A COLLERETTE	2	2				
19	90176–14002	NUT, CAP ECROU, BOUCHON	2	2				
20	92995–14600	WASHER RONDELLE	2	2				
21	6EK–44553–00–8D	COVER, LOWER MOUNT COUVERCLE, SUSPENSION INFERIEU	2	2				
22	90119–10058	BOLT, WITH WASHER BOULON, AVEC RONDELLE	4	4				
23	6EK–44514–00	MOUNT DAMPER, UPPER SIDE SILENT-BLOC, SUPERIEUR LATERAL	1	1				
24	95D75–10060	BOLT, FLANGE DEEP RECESS BOULON FIXATION	3	3				
25	90105–14007	BOLT, FLANGE BOULON, A COLLERETTE	2	2				
26	6EK–44526–00	PLATE PLAQUE	1	1				

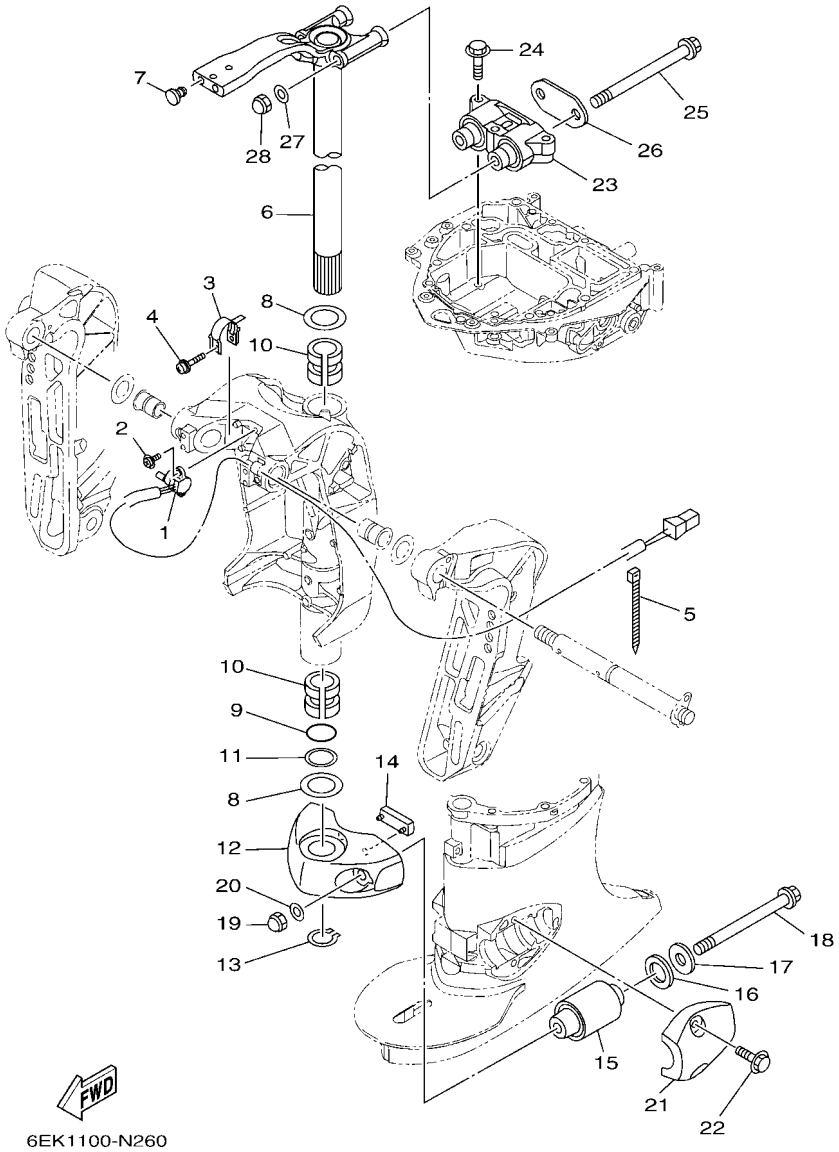

FIG. 26 BRACKET 2 — SUPPORT 2

REF. NO.	PART NO. N° PIECES	DESCRIPTION DESCRIPTION	6EKC	6ELC				REMARKS REMARQUES
27	92995–14600	WASHER RONDELLE	2	2				
28	90176–14002	NUT, CAP ECROU, BOUCHON	2	2				

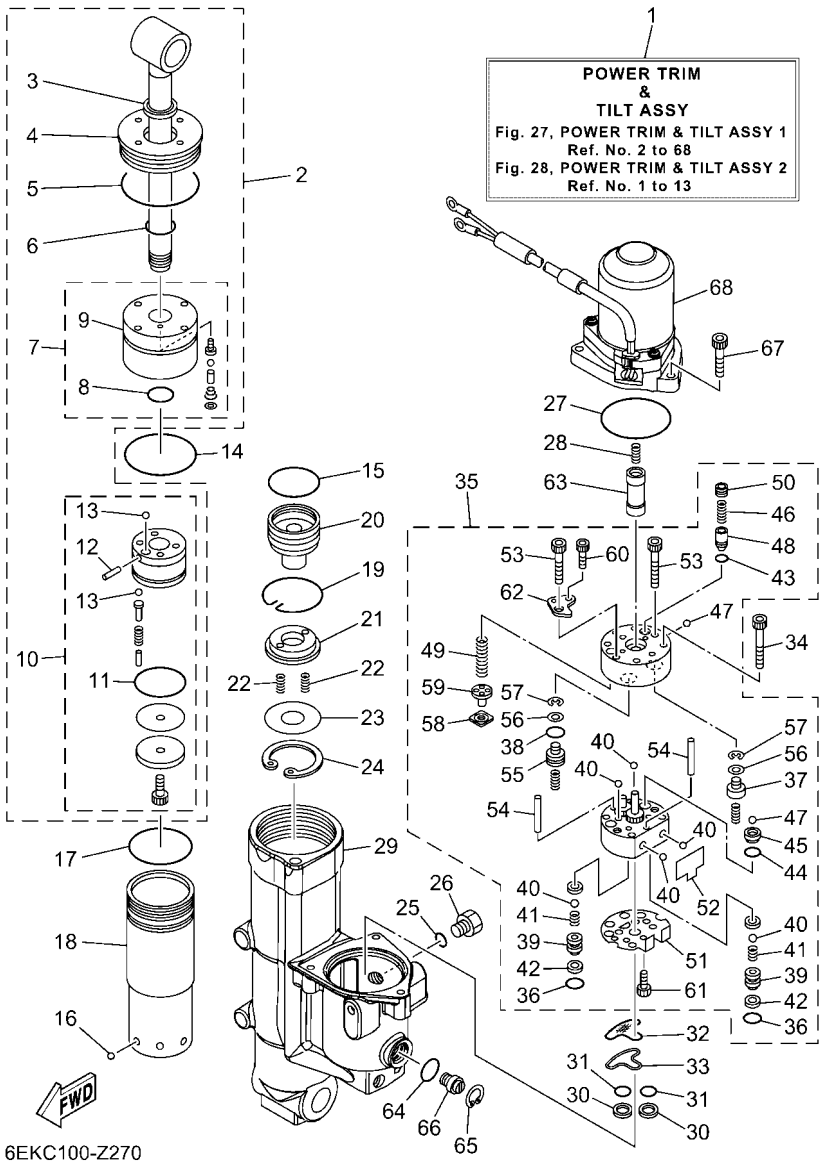

FIG. 27 POWER TRIM & TILT ASSY 1 — PUISSANCE PARER ET INCLINER 1

REF. NO.	PART NO. N° PIECES	DESCRIPTION DESCRIPTION	6EKC	6ELC				REMARKS REMARQUES
1	6EK–43800–04	POWER TRIM & TILT ASSY PUISSANCE PARER ET INCLINER (E	1	1				
2	6EK–43810–00	TILT PISTON SUB ASSY INCLINER PISTON AUXILIAIRE(ENS	1	1				
3	6H1–43812–00	.SEAL, DUST .JOINT	1	1				
4	6EK–43821–00	.SCREW, TRIM CYLINDER END .VIS	1	1				
5	6EK–43861–00	.O-RING .JOINT TORIQUE	1	1				
6	6D8–43861–00	.O-RING .JOINT TORIQUE	1	1				
7	6EK–4380R–00	.CYLINDER END SUB ASSY .CYLINDRE RACCORD (ENS.)	1	1				
8	6D8–43861–00	..O-RING ..JOINT TORIQUE	1	1				
9	6EK–43811–00	..SCREW, CYLINDER END ..VIS, CYLINDRE RACCORD	1	1				
10	6EK–4380P–00	.PISTON SUB ASSY .PISTON AUXILIAIRE (ENS.)	1	1				
11	6H1–43862–00	..O-RING ..JOINT TORIQUE	1	1				
12	91609–16012	..PIN, SPRING ..AXE DE RESSORT	1	1				
13	93505–32038	..BALL ..BILLE	5	5				
14	67F–43865–00	O-RING JOINT TORIQUE	1	1				
15	6H1–43862–00	O-RING JOINT TORIQUE	1	1				
16	93503–16003	BALL BILLES	6	6				
17	7BB–G3861–00	O-RING JOINT TORIQUE	1	1				
18	6EK–22471–01	CYLINDER, SHOCK ABSORBER CYLINDRE, AMORTISSEUR	1	1				
19	6EK–43875–00	RING, SNAP RESSORT	1	1				
20	6EK–4381B–00	FREE PISTON SUB ASSY PISTON AUXILIAIRE (ENS.)	1	1				
21	6EK–43899–00	PLATE STOPPER PLAQUETTE	1	1				
22	62X–4384H–00	SPRING RESSORT	2	2				
23	6EK–22434–00	PLATE, VALVE 1 PLATEAU, SOUPAPE 1	1	1				
24	99009–47500	CIRCLIP CIRCLIP	1	1				
25	93210–09165	O-RING JOINT TORIQUE	1	1				
26	6EK–43829–00	PLUG, RESERVOIR BOUCHON	1	1				
27	93210–68N50	O-RING JOINT TORIQUE	1	1				

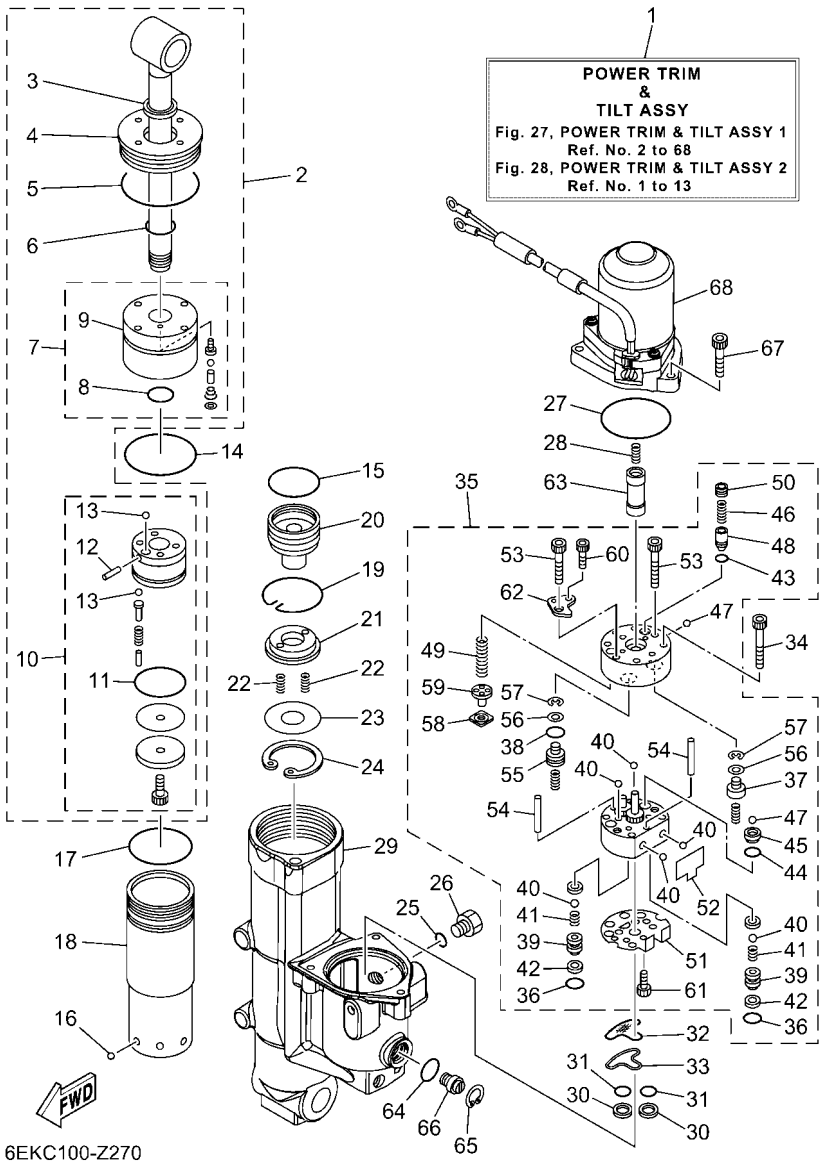

FIG. 27 POWER TRIM & TILT ASSY 1 — PUISSANCE PARER ET INCLINER 1

REF. NO.	PART NO. N° PIECES	DESCRIPTION DESCRIPTION	6EKC	6ELC				REMARKS REMARQUES
28	62X–4384H–00	SPRING RESSORT	1	1				
29	6EK–4380K–04	CYLINDER, TILT SUB ASSY CYLINDRE	1	1				
30	6C6–43817–00	FILTER 2 FILTRE 2	2	2				
31	69J–4389J–00	O-RING JOINT TORIQUE	2	2				
32	6C5–43816–00	FILTER 1 FILTRE 1	1	1				
33	6C5–4380G–00	PLATE PLAQUE	1	1				
34	91318–05045	BOLT BOULON	4	4				
35	6EK–43830–00	GEAR PUMP ASSY POMPE A PIGNON (ENS.)	1	1				
36	69J–4389J–00	.O-RING .JOINT TORIQUE	2	2				
37	6D8–4384M–00	.PISTON, SHUTTLE 2 .PISTON 2	1	1				
38	6H1–43883–00	.O-RING .JOINT TORIQUE	1	1				
39	6EK–4382E–00	.ADAPTOR 2 .ADAPTEUR 2	2	2				
40	93505–32038	.BALL .BILLE	6	6				
41	6C6–43853–00	.SPRING, MAIN VALVE .RESSORT	2	2				
42	6C6–4387G–00	.WASHER .RONDELLE	2	2				
43	93210–04N51	.O-RING .JOINT TORIQUE	1	1				
44	93210–064A5	.O-RING .JOINT TORIQUE	1	1				
45	6D8–43851–00	.SEAT, RELIEF VALVE .SIEGE	1	1				
46	6C5–43855–10	.SPRING, UP RELIEF .RESSORT	1	1				
47	93501–08001	.BALL .BILLE	2	2				
48	6D8–43844–00	.PIN, VALVE SUPPORT .GOUPILLE	1	1				
49	6EK–43856–00	.SPRING, DOWN RELIEF .RESSORT	1	1				
50	6D8–43843–00	.SCREW, VALVE LOCK .VIS	1	1				
51	6C5–43895–00	.SEAT, RELIEF VALVE .SIEGE	1	1				
52	6C5–43854–00	.SPRING, MANUAL RELEASE .RESSORT	1	1				
53	91318–05030	.BOLT .BOULON	2	2				
54	93604–26256	.PIN, DOWEL .CLAVETTE	2	2				

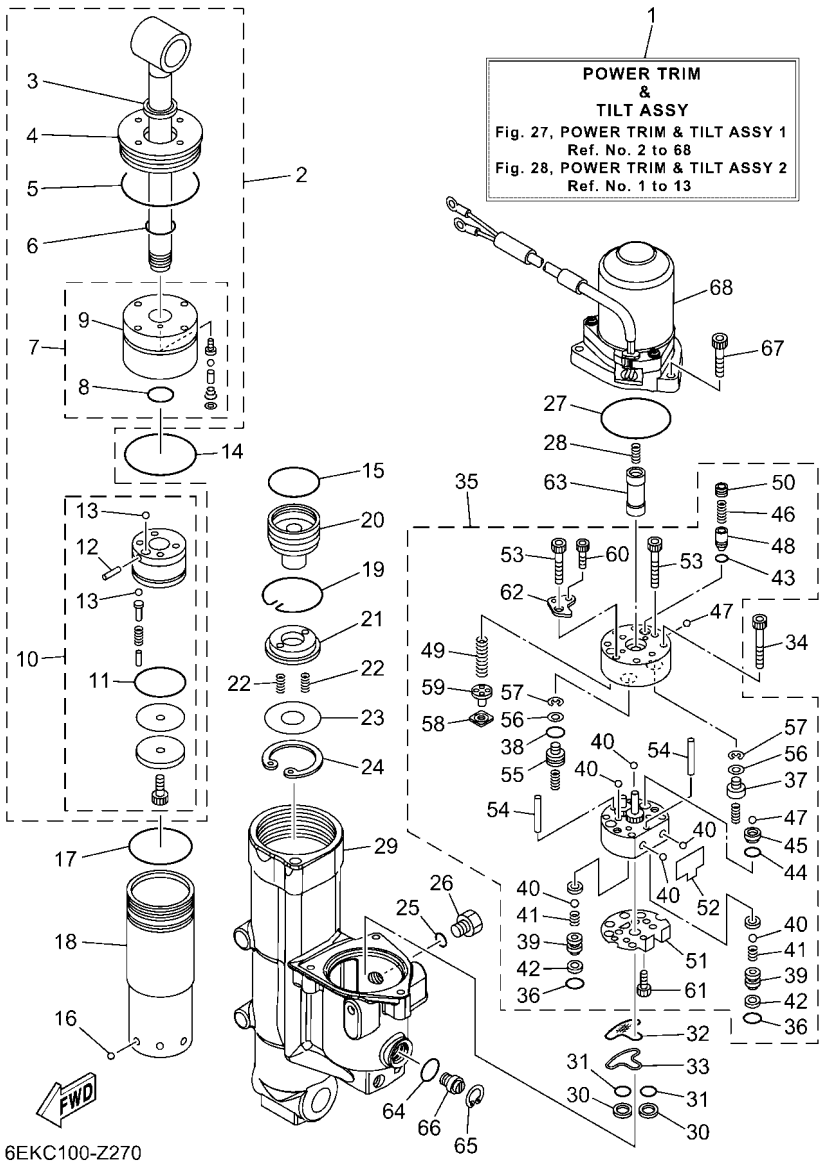

6EKC100-Z270

FIG. 27 POWER TRIM & TILT ASSY 1 — PUISSANCE PARER ET INCLINER 1

REF. NO.	PART NO. N° PIECES	DESCRIPTION DESCRIPTION	6EKC	6ELC				REMARKS REMARQUES
55	6D8–43841–00	.PISTON, SHUTTLE .PISTON	1	1				
56	69A–4384F–00	.SEAL, MAIN VALVE .JOINT	2	2				
57	99002–03600	.CIRCLIP .CIRCLIP	2	2				
58	6H1–4384G–11	.SEAL, RELIEF VALVE .JOINT	1	1				
59	6H1–43844–10	.PIN, VALVE SUPPORT .GOUPILLE	1	1				
60	91318–03025	.BOLT .BOULON	2	2				
61	91318–03005	.BOLT .BOULON	1	1				
62	6D8–4382L–00	.CAP, RELIEF VALVE .CAPUCHON	1	1				
63	6EK–43831–00	CONNECTOR, SHAFT RACCORD	1	1				
64	6D8–43863–00	O-RING JOINT TORIQUE	1	1				
65	6H1–43875–00	RING, SNAP RESSORT	1	1				
66	6EK–43845–00	SCREW, MANUAL RELEASE VIS	1	1				
67	91380–06025	BOLT BOULON	3	3				
68	6EK–43880–14	MOTOR ASSY MOTEUR (ENS.)	1	1				REFER TO FIG.28 REFER TO FIG.28

FIG. 28 POWER TRIM & TILT ASSY 2 — PUISSANCE PARER ET INCLINER 2

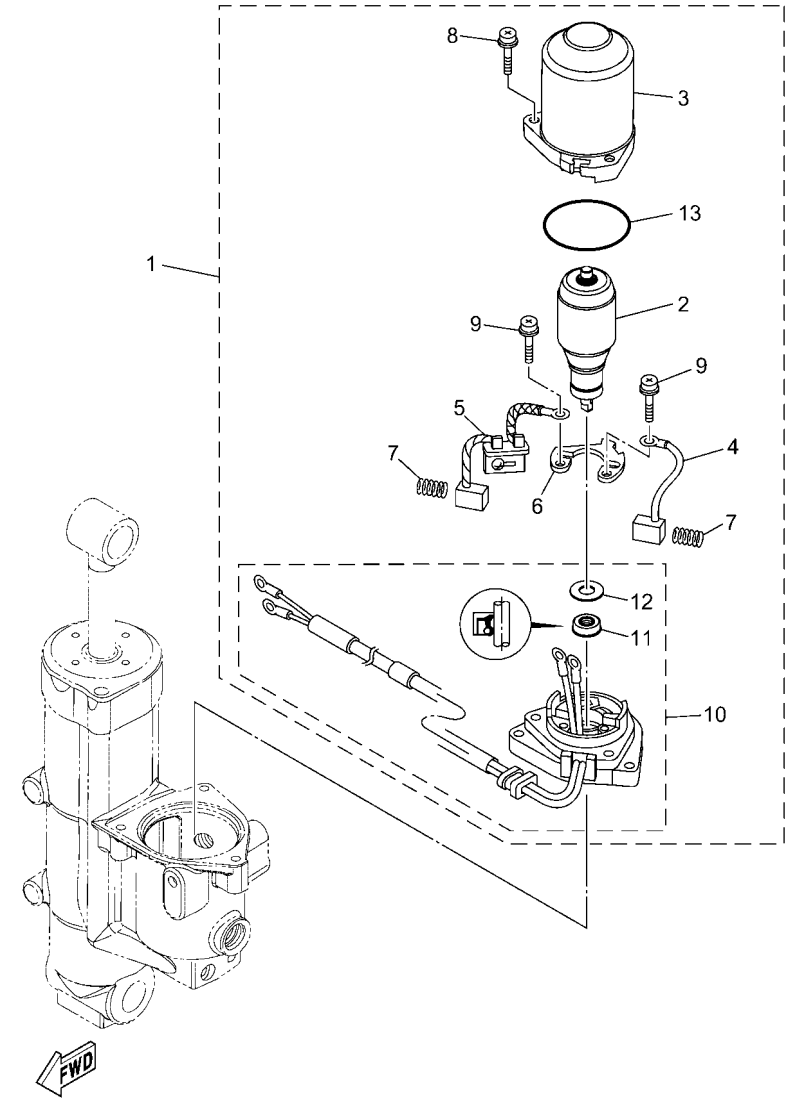

6FP9100-Z260

REF. NO.	PART NO. N° PIECES	DESCRIPTION DESCRIPTION	6EKC	6ELC				REMARKS REMARQUES
1	6EK–43880–14	MOTOR ASSY MOTEUR (ENS.)	1	1				
2	6LH–43805–00	.ARMATURE ASSY .INDUIT (ENS.)	1	1				
3	6EK–43804–11	.STATOR ASSY .STATOR (ENS.)	1	1				
4	6EK–43892–00	.BRUSH 2 .BALAI 2	1	1				
5	6EK–82181–00	.CIRCUIT BREAKER COMP. .RUPTEUR COMPLET	1	1				
6	6EK–4380F–00	.PLATE, BRUSH HOLDER .PLAQUE	1	1				
7	62X–4386K–00	.SPRING, BRUSH .RESSORT, BALAI	2	2				
8	63P–43879–10	.SCREW, WITH WASHER .VIS, AVEC RONDELLE	3	3				
9	97602–04316	.SCREW, PAN HEAD WITH WASHER .VIS, AVEC RONDELLE	2	2				
10	6EK–43881–14	.FRAME, END .BATI	1	1				
11	6LH–43882–00	..OIL SEAL ..JOINT SPI	1	1				
12	6LH–4387G–00	..WASHER ..RONDELLE	1	1				
13	6EK–43862–01	.O-RING .JOINT TORIQUE	1	1				

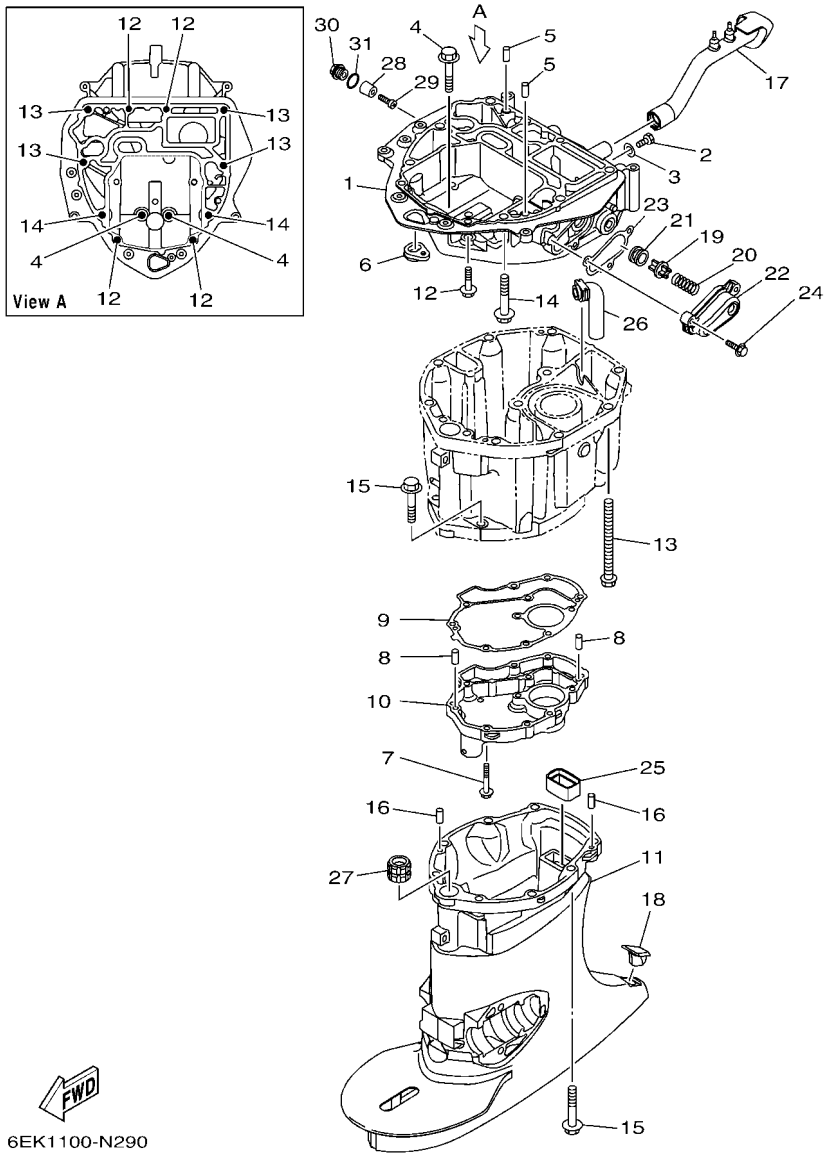

FIG. 29 UPPER CASING FOURREAU

REF. NO.	PART NO. N° PIECES	DESCRIPTION DESCRIPTION	6EKC	6ELC				REMARKS REMARQUES
1	6EK–41137–02–CA	GUIDE, EXHAUST COLLECTEUR D'ECHAPPEMENT	1	1				
2	97D95–08014	BOLT, HEXAGON DEEP RECESS VIS HEXAGONAL	1	1				
3	90430–08143	GASKET JOINT	1	1				
4	97E75–10545	BOLT, HEXAGON W/W DEEP RECESS VIS HEXAGONAL AVC RONDELLE	2	2				
5	93608–12M05	PIN, DOWEL AXE	2	2				
6	6EK–42727–01	GROMMET PASSE-FIL	1	1				
7	95D95–06030	BOLT, FLANGE DEEP RECESS BOULON FIXATION	11	11				
8	93606–12019	PIN, DOWEL GOUPILLE	2	2				
9	6EK–41134–00	GASKET, EXHAUST MANIFOLD JOINT, PIPE D'ECHAPPEMENT	1	1				
10	6EK–45181–01	PLATE PLAQUETTE	1	1				
11	6EK–45111–00–8D	CASING, UPPER FOURREAU	1					L(20.3") L(20.3")
	6EK–45111–10–8D	CASING, UPPER FOURREAU	1	1				X(25.3") X(25.3")
12	97E75–08535	BOLT, HEXAGON W/W DEEP RECESS VIS HEXAGONAL AVC RONDELLE	4	4				
13	90119–10007	BOLT, WITH WASHER BOULON, AVEC RONDELLE	4	4				
14	97E75–10545	BOLT, HEXAGON W/W DEEP RECESS VIS HEXAGONAL AVC RONDELLE	2	2				
15	97E75–10545	BOLT, HEXAGON W/W DEEP RECESS VIS HEXAGONAL AVC RONDELLE	8	8				
16	93606–12019	PIN, DOWEL GOUPILLE	2	2				
17	6EK–42769–01	SEAL, RUBBER BOURRELET, CAOUTCHOUC	1	1				
18	6C5–45155–02	CAP CAPUCHON	1	1				
19	6G5–12416–00	VALVE, PRESSURE CONTROL SOUPAPE DE CONTROLEUR PRESS	1	1				
20	90501–200A2	SPRING, COMPRESSION RESSORT, COMPRESSION	1	1				
21	90480–20M05	GROMMET PASSE-FIL	1	1				
22	6EK–1246A–00–9S	COVER 1 COUVERCLE 1	1	1				
23	6EK–12435–A0	GASKET JOINT	1	1				
24	95D95–06025	BOLT, FLANGE DEEP RECESS BOULON FIXATION	3	3				
25	67F–45127–00	SEAL JOINT	1	1				
26	6EK–45135–00	PIPE TUYAU	1	1				

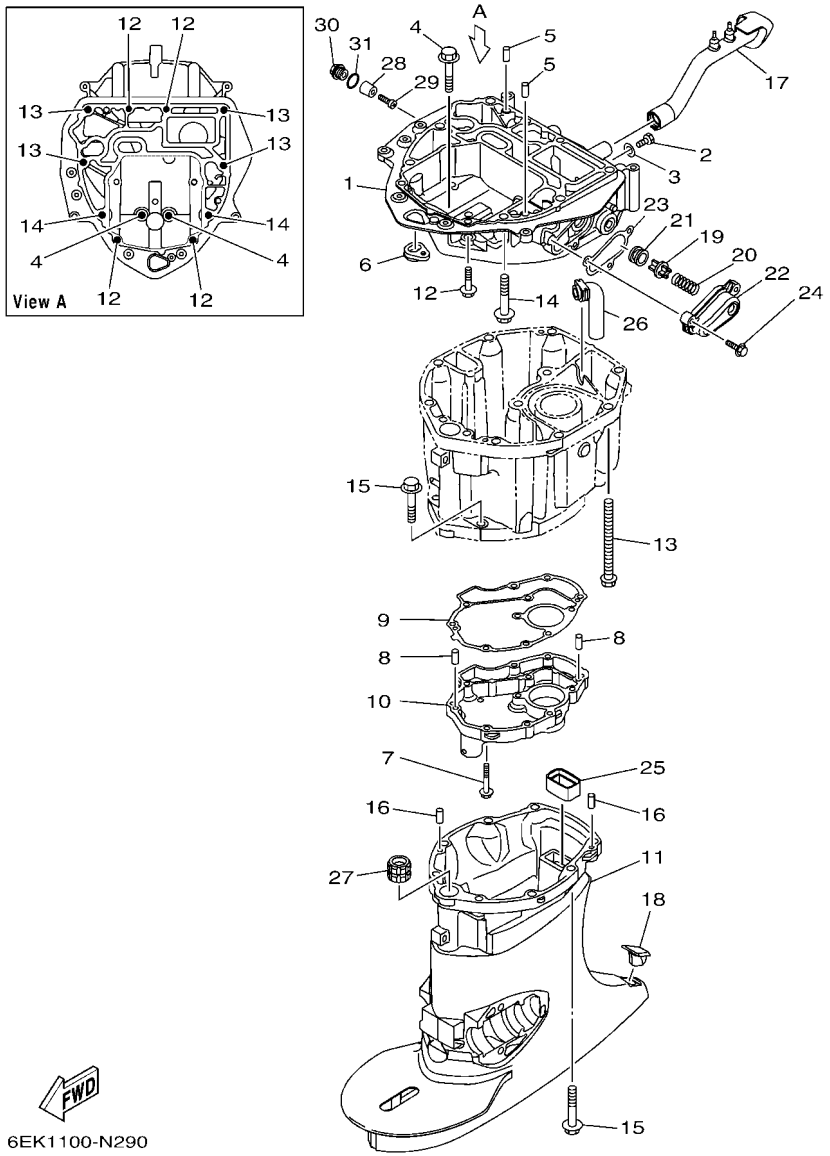

FIG. 29 UPPER CASING — FOURREAU

REF. NO.	PART NO. N° PIECES	DESCRIPTION DESCRIPTION	6EKC	6ELC				REMARKS REMARQUES
27	6EK–45318–00	BUSHING, DRIVE SHAFT DOUILLE, ARBRE MOTEUR	1	1				X(25.3") X(25.3")
28	6G8–11325–00	ANODE ANODE	1	1				
29	98980–05025	SCREW, BIND VIS, DE PRESSION	1	1				
30	6G8–11197–A0	PLUG, BLIND PLOT, BORGNE	1	1				
31	93210–13M63	O-RING JOINT TORIQUE	1	1				

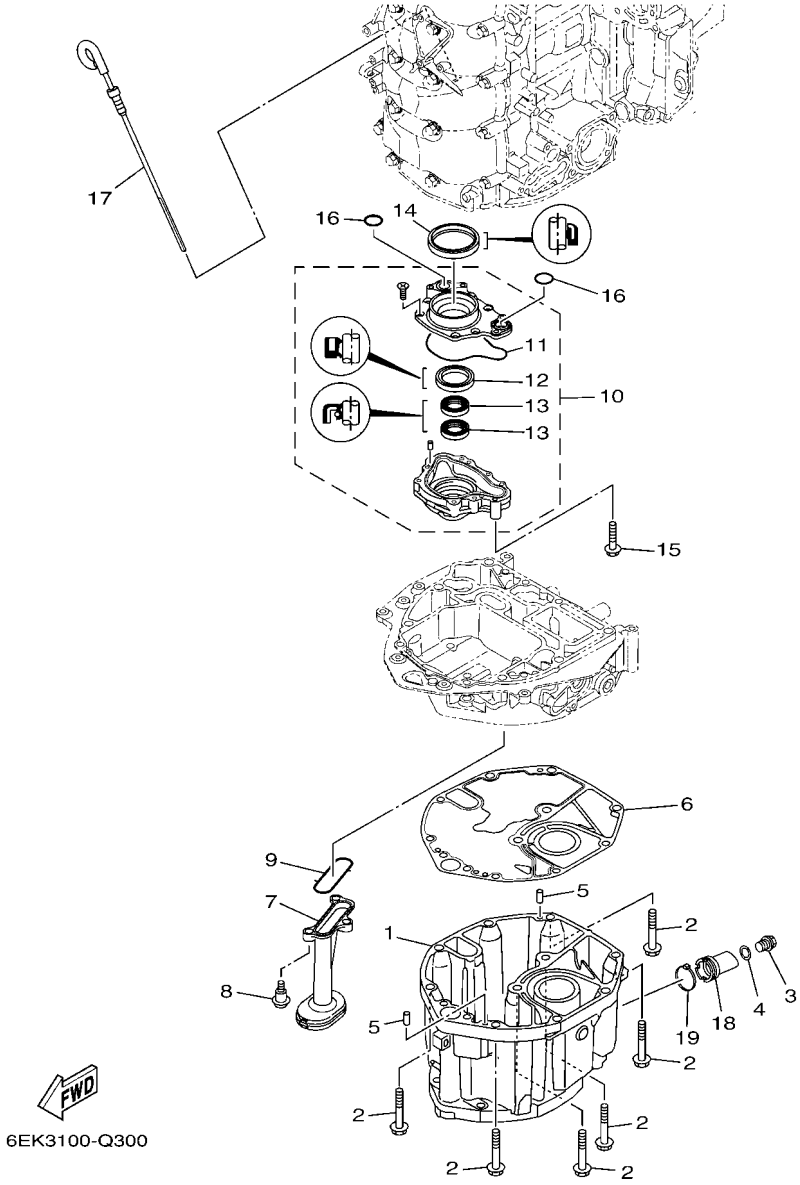

FIG. 30 OIL PAN — VENTILATEUR D'HUILE

REF. NO.	PART NO. N° PIECES	DESCRIPTION DESCRIPTION	6EKC	6ELC				REMARKS REMARQUES
1	6EK–15311–02–CA	OIL PAN VENTILATEUR D'HUILE	1	1				
2	97E75–10545	BOLT, HEXAGON W/W DEEP RECESS VIS HEXAGONAL AVC RONDELLE	6	6				
3	90340–14M06	PLUG, STRAIGHT SCREW PLOT, FILETE DROIT	1	1				
4	90430–14M09	GASKET JOINT	1	1				
5	93606–12019	PIN, DOWEL GOUPILLE	2	2				
6	6EK–15312–01	GASKET, OIL PAN JOINT DE VENTILATEUR D'HUILE	1	1				
7	67F–13411–00	STRAINER, OIL FILTRE, HUILE	1	1				
8	90109–06292	BOLT BOULON	3	3				
9	67F–13415–00	SEAL, OIL STRAINER JOINT, FILTRE A HUILE	1	1				
10	6EK–13300–00	OIL PUMP ASSY POMPE A HUILE COMPLETE	1	1				
11	6EK–13329–00	.GASKET, PUMP COVER .JOINT, COUVERCLE DE POMPE	1	1				
12	6AW–13119–00	.OIL SEAL .JOINT SPY	1	1				
13	69J–13631–00	.OIL SEAL .JOINT SPY	2	2				
14	69J–11355–00	SEAL, CYLINDER 1 JOINT, SPY CYLINDRE	1	1				
15	90105–06151	BOLT, FLANGE BOULON, A COLLERETTE	4	4				
16	93210–19MJ1	O-RING JOINT TORIQUE	2	2				
17	6EK–15362–10	PLUG, OIL LEVEL PLOT, NIVEAU D'HUILE	1	1				
18	6EK–15316–00	DAMPER 1 AMORTISSEUR 1	1	1				
19	90465–11M59	CLAMP BRIDE	1	1				

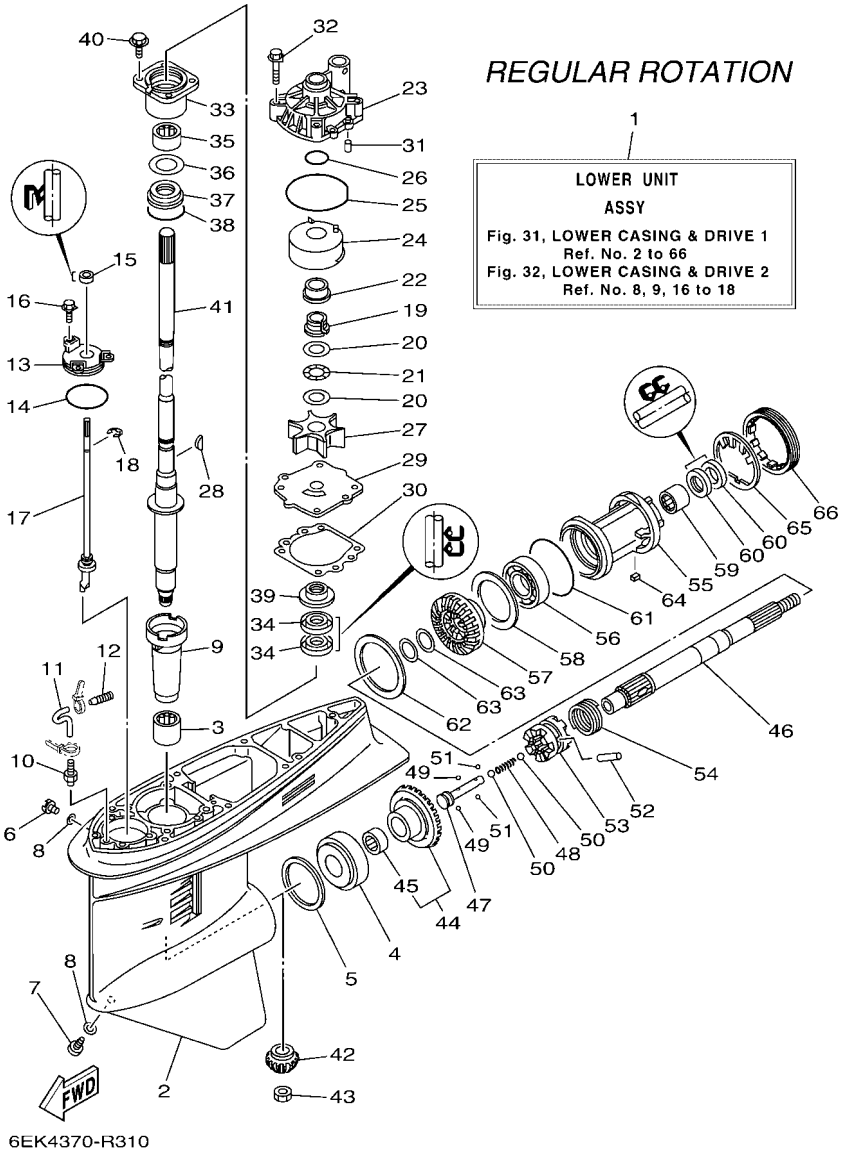

FIG. 31 LOWER CASING & DRIVE 1 — BOITIER D HELICE TRANSMISSION1

REF. NO.	PART NO. N° PIECES	DESCRIPTION DESCRIPTION	6EKC	6ELC				REMARKS REMARQUES
1	6EK–45300–03–8D	LOWER UNIT ASSY UNITE INFERIEURE (ENS.)	1					L(20.3"),RH L(20.3"),RH
	6EK–45300–13–8D	LOWER UNIT ASSY UNITE INFERIEURE (ENS.)	1					X(25.3"),RH X(25.3"),RH
2	6E5–45301–07–8D	CASING, LOWER BEQUILLE	1					
3	93315–628U9	BEARING ROULEMENT	1					
4	93332–000U7	BEARING ROULEMENT	1					
5	6E5–45567–01	SHIM (T:0.10MM) CALE (T:0.10MM)	1					UR UR
	6E5–45567–10	SHIM (T:0.12MM) CALE (T:0.12MM)	1					UR UR
	6E5–45567–20	SHIM (T:0.15MM) CALE (T:0.15MM)	1					UR UR
	6E5–45567–30	SHIM (T:0.18MM) CALE (T:0.18MM)	1					UR UR
	6E5–45567–40	SHIM (T:0.30MM) CALE (T:0.30MM)	1					UR UR
	6E5–45567–50	SHIM (T:0.40MM) CALE (T:0.40MM)	1					UR UR
	6E5–45567–60	SHIM (T:0.50MM) CALE (T:0.50MM)	1					UR UR
6	90340–08002	PLUG, STRAIGHT SCREW PLOT, FILETE DROIT	1					
7	688–45341–10	PLUG, DRAIN BOUCHON DE VIDANGE	1					
8	90430–08003	GASKET JOINT	2					
9	6E5–45536–00	SLEEVE, DRIVE SHAFT MANCHON, ARBRE MOTEUR	1					
10	6E5–45378–00	NIPPLE, HOSE RACCORD, TUYAU	1					
11	90445–07ME8	HOSE (L80) DURITE (L80)	1					L(20.3") L(20.3")
	90445–07ME9	HOSE (L120) DURITE (L120)	1					X(25.3") X(25.3")
12	6E5–83558–10	END, NIPPLE RACCORD DE NIPPLE	1					
13	6E5–45321–00	PLATE PLAQUETTE	1					
14	93210–58144	O-RING JOINT TORIQUE	1					
15	93106–09014	OIL SEAL JOINT SPY	1					
16	90119–06286	BOLT, WITH WASHER BOULON, AVEC RONDELLE	3					
17	6E5–44150–03	SHIFT CAM ASSY CAME D'INVERSION	1					
18	99001–08600	CIRCLIP CIRCLIP	1					
19	61A–45538–00	SPACER 1 ENTRETOISE	1					

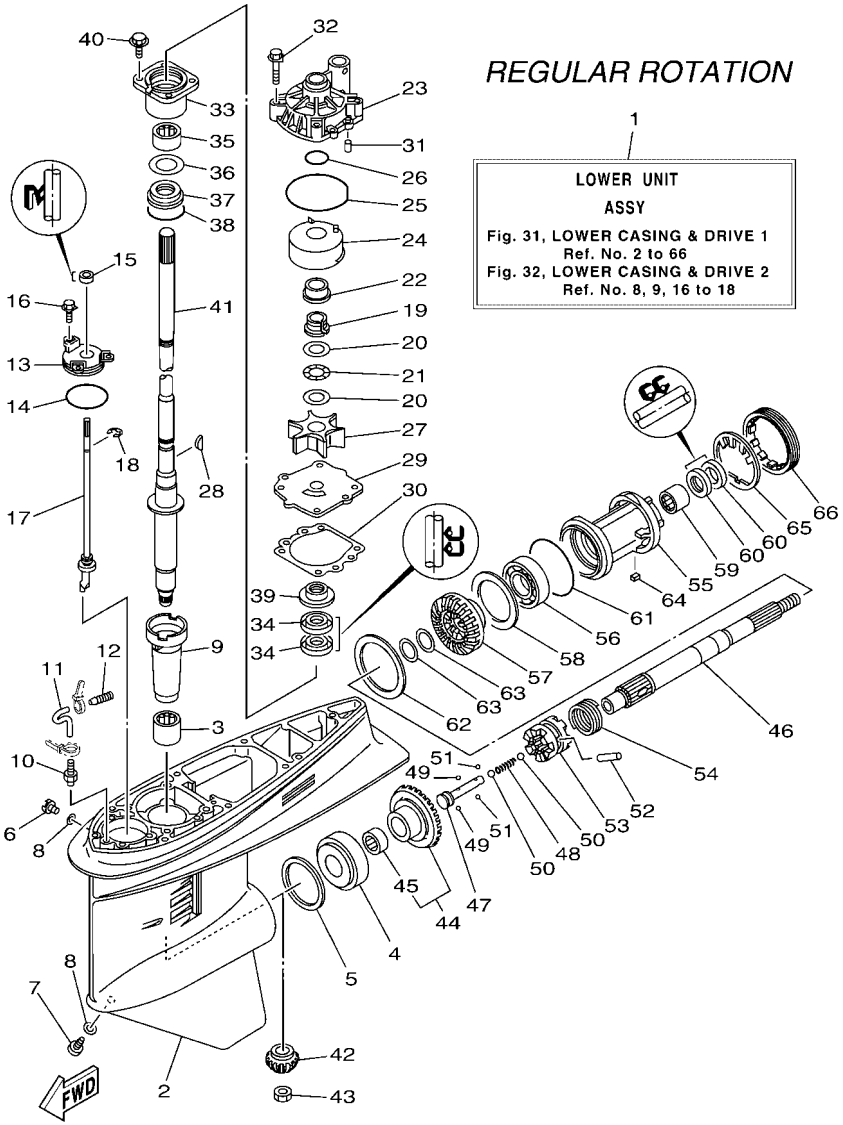

FIG. 31 LOWER CASING & DRIVE 1 — BOITIER D HELICE TRANSMISSION1

REF. NO.	PART NO. N° PIECES	DESCRIPTION DESCRIPTION	6EKC	6ELC				REMARKS REMARQUES
20	90201–22M01	WASHER, PLATE RONDELLE, PLATE	2					
21	90206–22M19	WASHER, WAVE RONDELLE, ONDULEE	1					
22	61A–45527–00	COLLAR, DRIVE SHAFT ENTRETOISE	1					
23	61A–44311–01	HOUSING, WATER PUMP CORPS, POMPE A EAU	1					
24	61A–44322–02	INSERT, CARTRIDGE CUVETTE	1					
25	93210–86M38	O-RING JOINT TORIQUE	1					
26	93210–37160	O-RING JOINT TORIQUE	1					
27	6E5–44352–01	IMPELLER TURBINE	1					
28	90280–04M05	KEY, WOODRUFF CLAVETTE, DEMI-LUNE	1					
29	6EK–44323–00	OUTER PLATE, CARTRIDGE PLAQUE EXTERIEURE	1					
30	6E5–44315–A0	GASKET, WATER PUMP JOINT, POMPE A EAU	1					
31	93606–12019	PIN, DOWEL GOUPILLE	2					
32	90119–08191	BOLT, WITH WASHER BOULON, AVEC RONDELLE	4					
33	6E5–45331–00–9S	HOUSING, BEARING FLASQUE, ROULEMENT	1					
34	93101–28M16	OIL SEAL JOINT SPY	2					
35	93317–330U2	BEARING ROULEMENT	1					
36	6E5–45587–01	SHIM (T:0.10MM) CALE (T:0.10MM)	1					UR UR
	6E5–45587–10	SHIM (T:0.12MM) CALE (T:0.12MM)	1					UR UR
	6E5–45587–20	SHIM (T:0.15MM) CALE (T:0.15MM)	1					UR UR
	6E5–45587–30	SHIM (T:0.18MM) CALE (T:0.18MM)	1					UR UR
	6E5–45587–40	SHIM (T:0.30MM) CALE (T:0.30MM)	1					UR UR
	6E5–45587–50	SHIM (T:0.40MM) CALE (T:0.40MM)	1					UR UR
	6E5–45587–60	SHIM (T:0.50MM) CALE (T:0.50MM)	1					UR UR
37	93341–930V2	BEARING CERVEAUX DE DIRECTION	1					
38	93210–55M14	O-RING JOINT TORIQUE	1					
39	6E5–45344–00	COVER, OIL SEAL FLASQE, JOINT D'HUILE	1					
40	97E95–08525	BOLT, HEXAGON W/W DEEP RECESS VIS HEXAGONAL AVC RONDELLE	4					

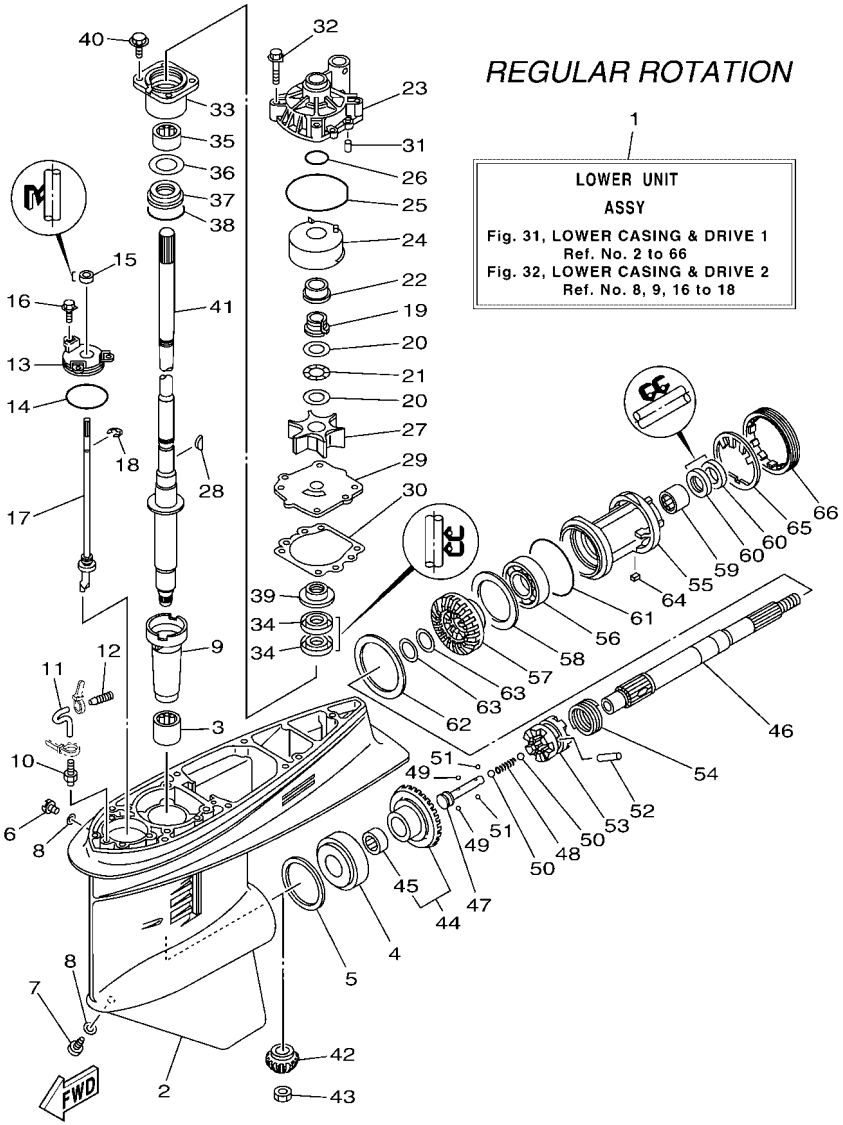

FIG. 31 LOWER CASING & DRIVE 1 — BOITIER D HELICE TRANSMISSION1

REF. NO.	PART NO. N° PIECES	DESCRIPTION DESCRIPTION	6EKC	6ELC				REMARKS REMARQUES
41	6EK–45501–00	DRIVE SHAFT COMP. ARBRE MOTEUR COMP.	1					L(20.3") L(20.3")
	6EK–45501–10	DRIVE SHAFT COMP. ARBRE MOTEUR COMP.	1					X(25.3") X(25.3")
42	68V–45551–00	PINION (13T) PIGNON D'ATTAQUE (13D)	1					
43	90170–16M01	NUT ECROU	1					
44	68V–45560–00	GEAR 1 (28T) PIGNON 1 (28T)	1					
45	93315–425U7	.BEARING .ROULEMENT	1					
46	6E5–45611–01	SHAFT, PROPELLER ARBRE, HELICE	1					
47	6E5–45634–02	SLIDE, SHIFT CONTRE-POUSSOIR	1					
48	90501–16M37	SPRING, COMPRESSION RESSORT, COMPRESSION	1					
49	93507–32009	BALL BILLE	2					
50	93511–32017	BALL BILLES	2					
51	93503–16003	BALL BILLES	2					
52	90250–08M07	PIN, STRAIGHT GOUPILLE, DROITE	1					
53	68V–45631–02	CLUTCH, DOG CRABOT	1					
54	6E5–45633–01	RING, CROSS PIN JONC, GOUPILLE CRABOT	1					
55	6E5–45332–00–CA	HOUSING, BEARING FLASQUE, ROULEMENT	1					
56	93306–208U0	BEARING ROULEMENT	1					
57	68V–45571–00	GEAR 2 (28T) PIGNON 2 (28T)	1					
58	6E5–45576–00	WASHER, THRUST 2 RONDELLE DE CALAGE 2	1					
59	93315–430U8	BEARING ROULEMENT	1					
60	93101–30M17	OIL SEAL JOINT SPY	2					
61	93210–86M39	O-RING JOINT TORIQUE	1					
62	6L6–45577–00	SHIM (T:0.10MM) CALE (T:0.10MM)	1					UR UR
	6L6–45577–10	SHIM (T:0.12MM) CALE (T:0.12MM)	1					UR UR
	6L6–45577–20	SHIM (T:0.15MM) CALE (T:0.15MM)	1					UR UR
	6L6–45577–30	SHIM (T:0.18MM) CALE (T:0.18MM)	1					UR UR
	6L6–45577–40	SHIM (T:0.30MM) CALE (T:0.30MM)	1					UR UR

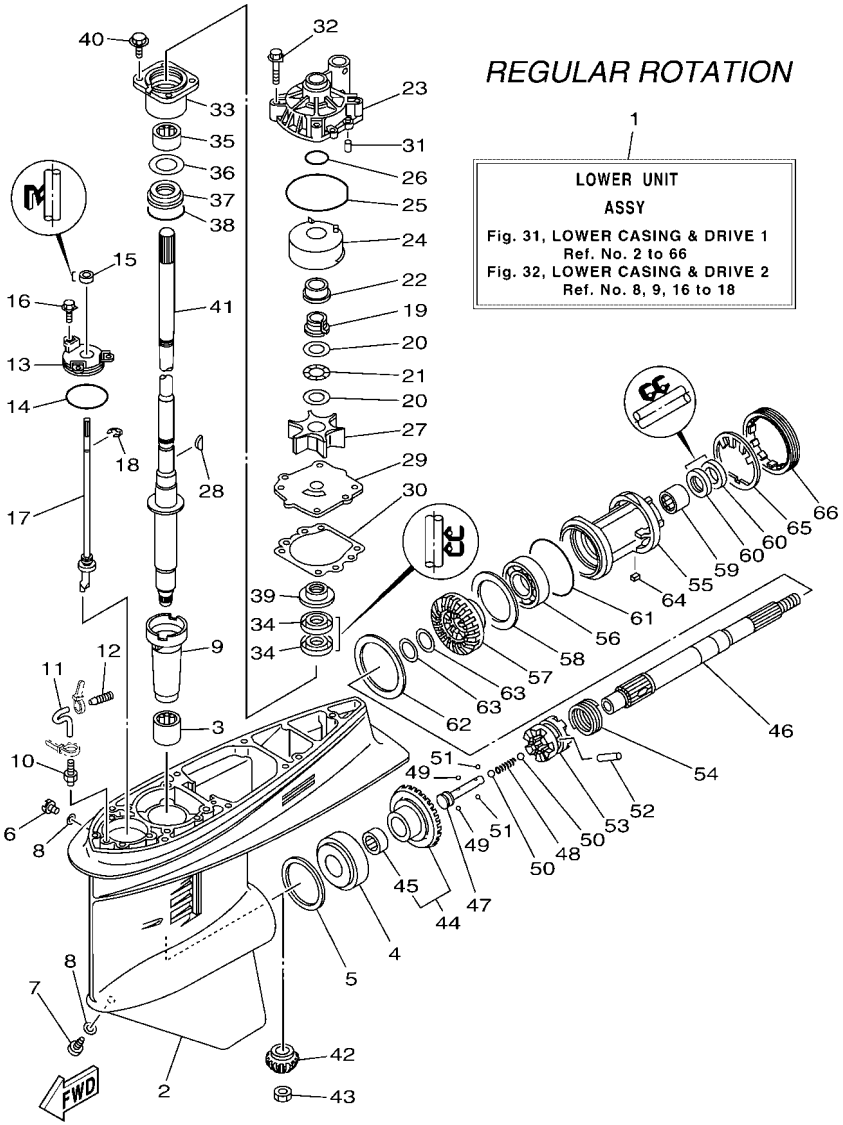

FIG. 31 LOWER CASING & DRIVE 1 — BOITIER D HELICE TRANSMISSION1

REF. NO.	PART NO. N° PIECES	DESCRIPTION DESCRIPTION	6EKC	6ELC				REMARKS REMARQUES
62	6L6–45577–50	SHIM (T:0.40MM) CALE (T:0.40MM)	1					UR UR
	6L6–45577–60	SHIM (T:0.50MM) CALE (T:0.50MM)	1					UR UR
63	90201–30M92	WASHER, PLATE RONDELLE, PLATE	2					
64	90282–04010	KEY, STRAIGHT CLAVETTE, DROITE	1					
65	688–45383–02	WASHER, CLAW FREIN D'ECROU	1					
66	688–45384–02	NUT ECROU	1					

FIG. 32 LOWER CASING & DRIVE 2 — BOITIER D HELICE TRANSMISSION2

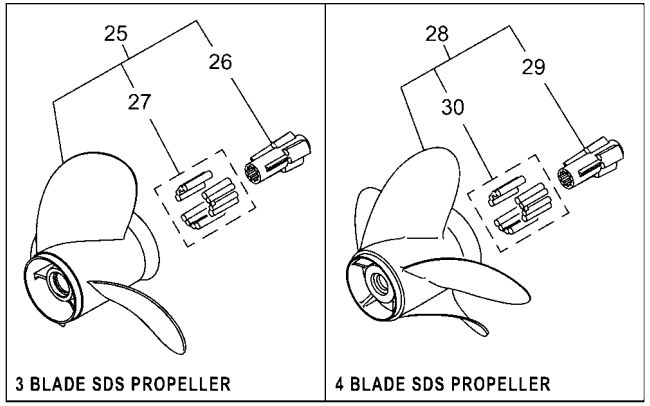

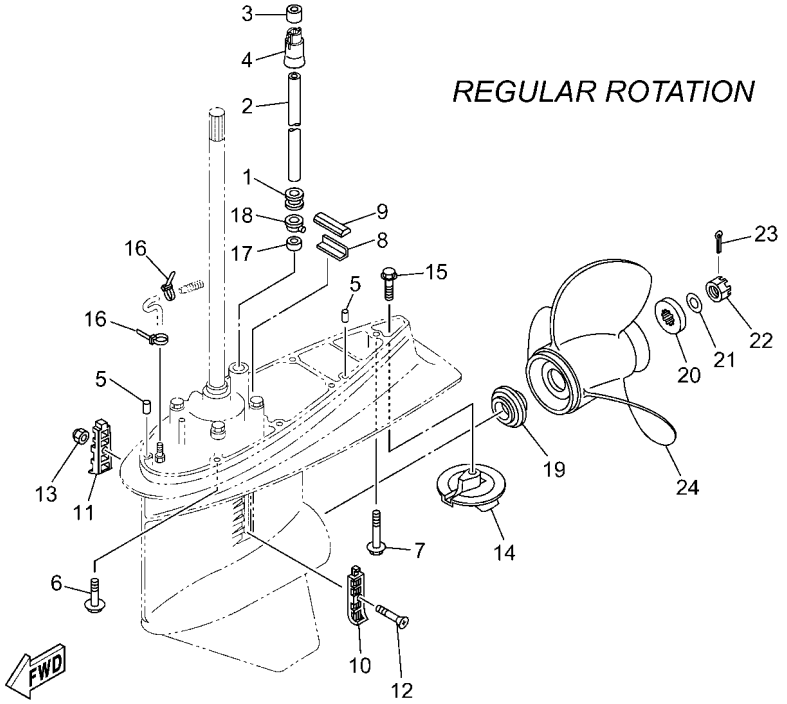

6EMB100-Z320

REF. NO.	PART NO. N° PIECES	DESCRIPTION DESCRIPTION	6EKC	6ELC				REMARKS REMARQUES
1	6E5–44366–01	DAMPER, WATER SEAL 2 JOINT, TUBE D'EAU 2	1					
2	90440–16001	PIPE (L167) DURITE (L167)	1					L(20.3") L(20.3")
	90440–16002	PIPE (L294) DURITE (L294)	1					X(25.3") X(25.3")
3	6EK–44365–01	DAMPER, WATER SEAL 1 JOINT, TUBE D'EAU 1	1					
4	6EK–44379–00	GUIDE, WATER TUBE GUIDE DE TUBE D'EAU	1					
5	93608–12M05	PIN, DOWEL AXE	2					
6	97E95–10545	BOLT, HEXAGON W/W DEEP RECESS VIS HEXAGONAL AVC RONDELLE	6					
7	90119–10071	BOLT, WITH WASHER BOULON, AVEC RONDELLE	1					
8	663–45376–00	GUIDE, SEAL DAMPER BUTEE, JOINT CAOUTCHOUC	1					
9	688–45375–00	DAMPER, SEAL BOURRELET, CAOUTCHOUC	1					
10	688–45214–02	COVER, WATER INLET 1 GRILLE, ENTREE D'EAU 1	1					
11	688–45215–02	COVER, WATER INLET 2 GRILLE, ENTREE D'EAU 2	1					
12	90152–05M07	SCREW, COUNTERSUNK VIS, TETE NOYEE	1					
13	90185–05002	NUT, NYLON ECROU,AUTO-BLOQUANT	1					
14	6E5–45371–01	TAB-TRIM ANODE DERIVE	1					
15	90105–10M00	BOLT, FLANGE BOULON, A COLLERETTE	1					
16	90465–11M10	CLAMP BRIDE	2					
17	6E5–44365–01	DAMPER, WATER SEAL 1 JOINT, TUBE D'EAU 1	1					
18	6E5–44312–00	COVER, WATER PUMP HOUSING COUVERCLE	1					
19	6E5–45987–01	SPACER 1 ENTRETOISE 1	1					
20	688–45997–01	SPACER 2 ENTRETOISE 2	1					
21	92990–18200	WASHER RONDELLE, PLATE	1					
22	90171–18M04	NUT, CASTLE ECROU, CRENELE	1					
23	91490–40030	PIN. COTTER GOUPILLE	1					
24	6E5–45954–00	PROPELLER (3X14"X11"-K) HELICE (3X14"X11"-K)	1					UR UR
	6E5–45949–00	PROPELLER (3X13-5/8"X13"-K) HELICE (3X13-5/8"X13"-K)	1					UR UR
	6E5–45958–00	PROPELLER (3X13-5/8"X14"-K) HELICE (3X13-5/8"X14"-K)	1					UR UR

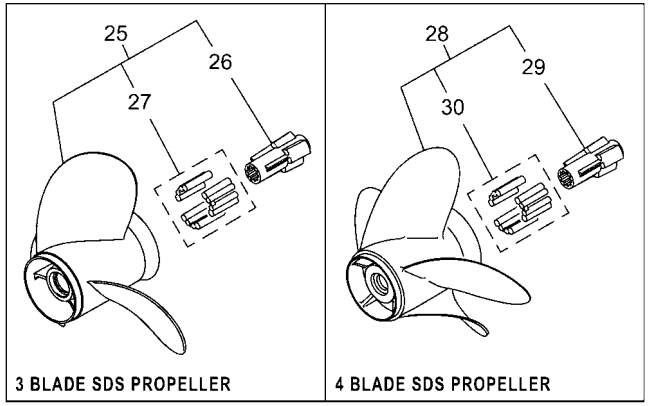

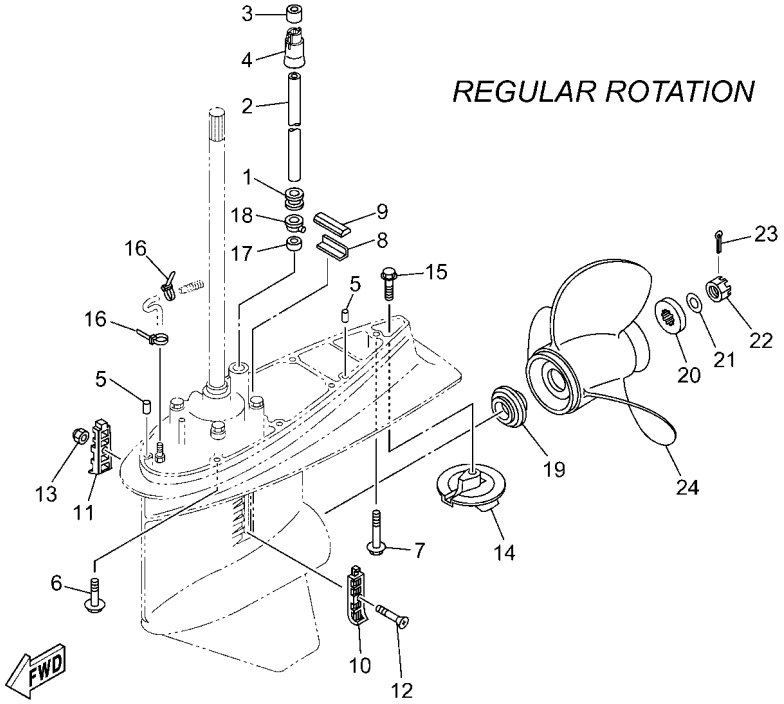

6EMB100-Z320

REF. NO.	PART NO. N° PIECES	DESCRIPTION DESCRIPTION	6EKC	6ELC				REMARKS REMARQUES
24	6E5–45947–00	PROPELLER (3X13-1/2"X15"-K) HELICE (3X13-1/2"X15"-K)	1					UR UR
	6E5–45945–01	PROPELLER (3X13-1/4"X17"-K) HELICE (3X13-1/4"X17"-K)	1					UR UR
	6E5–45941–00	PROPELLER (3X13"X19"-K) HELICE (3X13"X19"-K)	1					UR UR
	6E5–45943–00	PROPELLER (3X12-5/8"X21"-K) HELICE (3X12-5/8"X21"-K)	1					UR UR
	6E5–45952–00	PROPELLER (3X13"X23"-K) HELICE (3X13"X23"-K)	1					UR UR
	6E5–45956–00	PROPELLER (3X13"X25"-K) HELICE (3X13"X25"-K)	1					UR UR
	68V–45941–00	PROPELLER (3X13-1/2"X17"-K) HELICE (3X13-1/2"X17"-K)	1					UR UR
	68V–45943–00	PROPELLER (3X13-1/2"X19"-K) HELICE (3X13-1/2"X19"-K)	1					UR UR
	688–45932–60	PROPELLER (3X13-1/2"X14"-K) HELICE (3X13-1/2"X14"-K)	1					UR UR
	688–45978–60	PROPELLER (3X13-1/2"X16"-K) HELICE (3X13-1/2"X16"-K)	1					UR UR
	688–45930–02	PROPELLER (3X13"X17"-K2) HELICE (3X13"X17"-K2)	1					UR UR
	688–45970–03	PROPELLER (3X13"X19"-K) HELICE (3X13"X19"-K)	1					UR UR
	688–45972–02	PROPELLER (3X13"X21"-K) HELICE (3X13"X21"-K)	1					UR UR
	688–45974–02	PROPELLER (3X13"X23"-K) HELICE (3X13"X23"-K)	1					UR UR
	688–45976–01	PROPELLER (3X13"X25"-K) HELICE (3X13"X25"-K)	1					UR UR
	62A–45976–00	PROPELLER (3X13-1/2"X17"-K) HELICE (3X13-1/2"X17"-K)	1					UR UR
	62A–45974–10	PROPELLER (3X13-1/2"X19"-K) HELICE (3X13-1/2"X19"-K)	1					UR UR
	62A–45970–10	PROPELLER (3X13-1/2"X21"-K) HELICE (3X13-1/2"X21"-K)	1					UR UR
	62A–45972–10	PROPELLER (3X13-1/2"X23"-K) HELICE (3X13-1/2"X23"-K)	1					UR UR
25	6EK–45941–00	PROPELLER (3X13-1/2"X9"-K) HELICE (3X13-1/2"X9"-K)	1					UR SDS 3 BLADE UR SDS 3 BLADE
	6EK–45943–00	PROPELLER (3X13-1/2"X10-1/2"-K HELICE (3X13-1/2"X10-1/2"-K)	1					UR SDS 3 BLADE UR SDS 3 BLADE
	6EK–45945–00	PROPELLER (3X13-1/2"X12"-K) HELICE (3X13-1/2"X12"-K)	1					UR SDS 3 BLADE UR SDS 3 BLADE
	6EK–45947–00	PROPELLER (3X13-1/2"X14"-K) HELICE (3X13-1/2"X14"-K)	1					UR SDS 3 BLADE UR SDS 3 BLADE
	6EK–45949–00	PROPELLER (3X13-1/2"X16"-K) HELICE (3X13-1/2"X16"-K)	1					UR SDS 3 BLADE UR SDS 3 BLADE
	6FP–45941–00	PROPELLER (AL 3X13-5/8"X14"-K) HELICE (AL 3X13-5/8"X14"-K)	1					UR SDS 3 BLADE UR SDS 3 BLADE
	6FP–45943–00	PROPELLER (AL 3X13-1/2"X15"-K) HELICE (AL 3X13-1/2"X15"-K)	1					UR SDS 3 BLADE UR SDS 3 BLADE
	6FP–45945–00	PROPELLER (AL 3X13-1/4"X16"-K) HELICE (AL 3X13-1/4"X16"-K)	1					UR SDS 3 BLADE UR SDS 3 BLADE

FIG. 32 LOWER CASING & DRIVE 2 — BOITIER D HELICE TRANSMISSION2

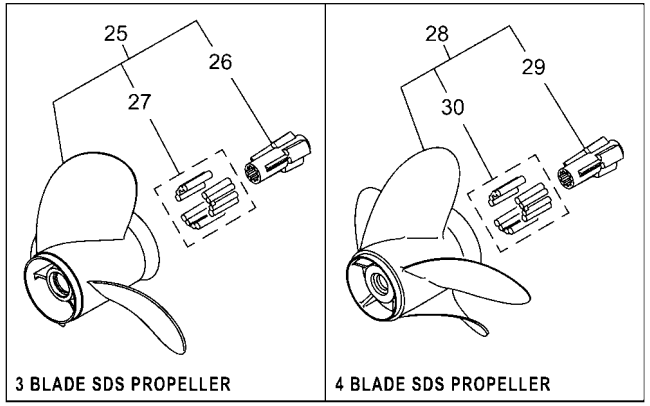

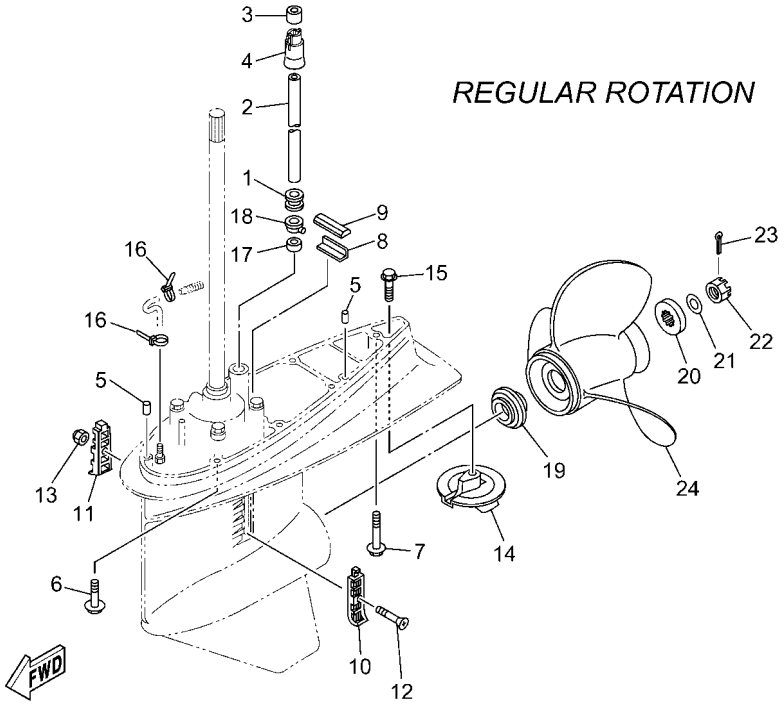

6EMB100-Z320

REF. NO.	PART NO. N° PIECES	DESCRIPTION DESCRIPTION	6EKC	6ELC				REMARKS REMARQUES
25	6FP–45947–00	PROPELLER (AL 3X13-1/8"X17"-K) HELICE (AL 3X13-1/8"X17"-K)	1					UR SDS 3 BLADE UR SDS 3 BLADE
	6FP–45949–00	PROPELLER (AL 3X13"X18"-K) HELICE (AL 3X13"X18"-K)	1					UR SDS 3 BLADE UR SDS 3 BLADE
	6N7–45970–00	PROPELLER (3X13-1/8"X14"-K) HELICE (3X13-1/8"X14"-K)	1					UR SDS 3 BLADE UR SDS 3 BLADE
	6N7–45972–00	PROPELLER (3X13-1/8"X16"-K) HELICE (3X13-1/8"X16"-K)	1					UR SDS 3 BLADE UR SDS 3 BLADE
	6N7–45974–00	PROPELLER (3X13-1/8"X18"-K) HELICE (3X13-1/8"X18"-K)	1					UR SDS 3 BLADE UR SDS 3 BLADE
	6N7–45976–00	PROPELLER (3X13-1/8"X19"-K) HELICE (3X13-1/8"X19"-K)	1					UR SDS 3 BLADE UR SDS 3 BLADE
	6N7–45978–00	PROPELLER (3X13-1/8"X20"-K) HELICE (3X13-1/8"X20"-K)	1					UR SDS 3 BLADE UR SDS 3 BLADE
	6N7–45930–00	PROPELLER (3X13-1/8"X22"-K) HELICE (3X13-1/8"X22"-K)	1					UR SDS 3 BLADE UR SDS 3 BLADE
	6N7–45932–00	PROPELLER (3X13-1/8"X24"-K) HELICE (3X13-1/8"X24"-K)	1					UR SDS 3 BLADE UR SDS 3 BLADE
	6H1–45970–00	PROPELLER (3X14"X9"-K) HELICE (3X14"X9"-K)	1					UR SDS 3 BLADE UR SDS 3 BLADE
	6H1–45972–00	PROPELLER (3X14"X10"-K) HELICE (3X14"X10"-K)	1					UR SDS 3 BLADE UR SDS 3 BLADE
	6H1–45974–00	PROPELLER (3X14"X11"-K) HELICE (3X14"X11"-K)	1					UR SDS 3 BLADE UR SDS 3 BLADE
	6H1–45976–00	PROPELLER (3X14"X12"-K) HELICE (3X14"X12"-K)	1					UR SDS 3 BLADE UR SDS 3 BLADE
	6H1–45978–00	PROPELLER (3X14"X13"-K) HELICE (3X14"X13"-K)	1					UR SDS 3 BLADE UR SDS 3 BLADE
26	6EK–45982–00	.BUSH, PROPELLER .DOUILLE DE HELICE	1					
27	6EK–45C82–09	.DAMPER RUBBER, PROPELLER 2 .AMORTISSEUR HELICE 2	1					
28	6N6–45B70–00	PROPELLER (4X13-1/4"X14"-X) HELICE (4X13-1/4"X14"-X)	1					UR SDS 4 BLADE UR SDS 4 BLADE
	6N6–45B72–00	PROPELLER (4X13-1/4"X16"-X) HELICE (4X13-1/4"X16"-X)	1					UR SDS 4 BLADE UR SDS 4 BLADE
	6N6–45B74–00	PROPELLER (4X13-1/4"X18"-X) HELICE (4X13-1/4"X18"-X)	1					UR SDS 4 BLADE UR SDS 4 BLADE
	6N6–45B76–00	PROPELLER (4X13-1/4"X20"-X) HELICE (4X13-1/4"X20"-X)	1					UR SDS 4 BLADE UR SDS 4 BLADE
	6N6–45B78–00	PROPELLER (4X13-1/4"X22"-X) HELICE (4X13-1/4"X22"-X)	1					UR SDS 4 BLADE UR SDS 4 BLADE
	6N6–45B80–00	PROPELLER (4X13-1/4"X23"-X) HELICE (4X13-1/4"X23"-X)	1					UR SDS 4 BLADE UR SDS 4 BLADE
29	6EK–45982–00	.BUSH, PROPELLER .DOUILLE DE HELICE	1					
30	6EK–45C82–09	.DAMPER RUBBER, PROPELLER 2 .AMORTISSEUR HELICE 2	1					

FIG. 33 LOWER CASING & DRIVE 3 — BOITIER D'HELICE TRANSMISSION3

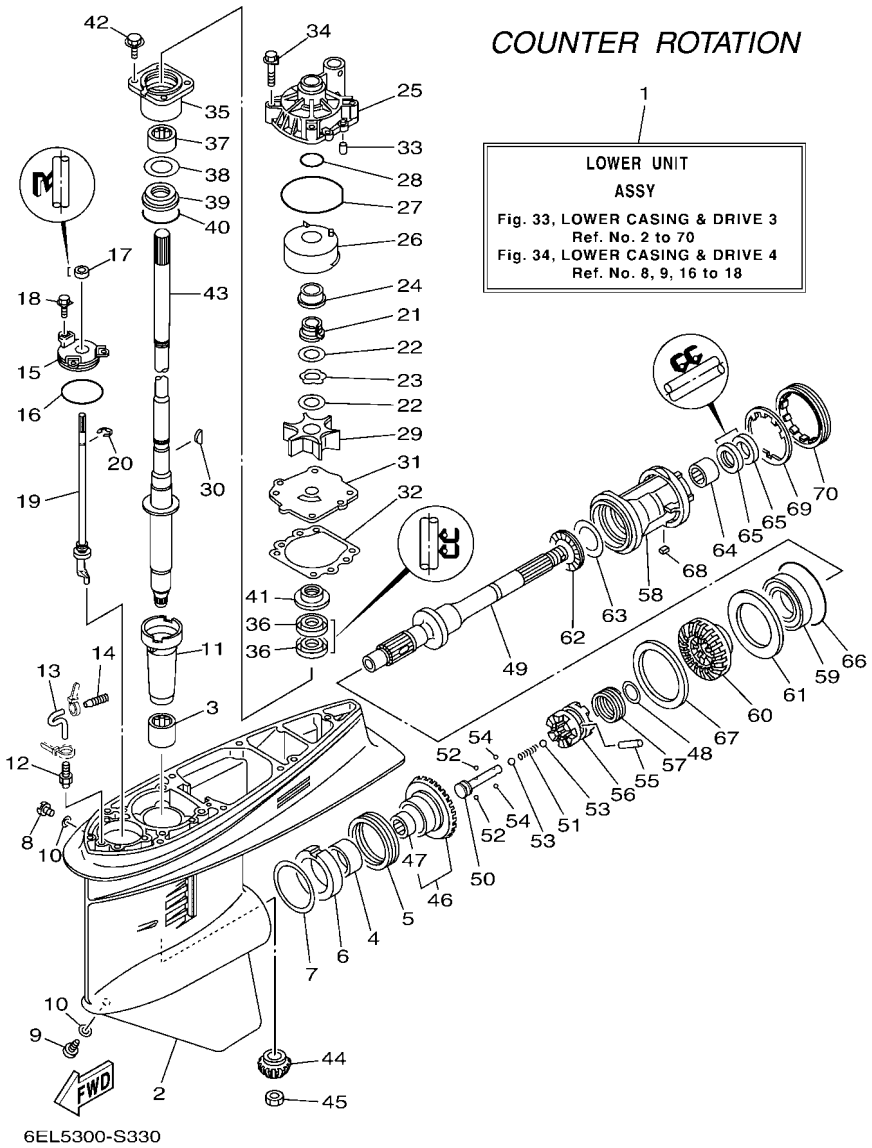

REF. NO.	PART NO. N° PIECES	DESCRIPTION DESCRIPTION	6EKC	6ELC				REMARKS REMARQUES
1	6EL–45300–14–8D	LOWER UNIT ASSY UNITE INFERIEURE (ENS.)		1				X(25.3"),LH X(25.3"),LH
2	6E5–45301–07–8D	CASING, LOWER BEQUILLE		1				
3	93315–628U9	BEARING ROULEMENT		1				
4	93315–345W0	BEARING ROULEMENT		1				
5	93341–360U8	BEARING CERVEAUX DE DIRECTION		1				
6	6L6–45538–00	SPACER 1 ENTRETOISE		1				
7	6E5–45567–01	SHIM (T:0.10MM) CALE (T:0.10MM)		1				UR UR
	6E5–45567–10	SHIM (T:0.12MM) CALE (T:0.12MM)		1				UR UR
	6E5–45567–20	SHIM (T:0.15MM) CALE (T:0.15MM)		1				UR UR
	6E5–45567–30	SHIM (T:0.18MM) CALE (T:0.18MM)		1				UR UR
	6E5–45567–40	SHIM (T:0.30MM) CALE (T:0.30MM)		1				UR UR
	6E5–45567–50	SHIM (T:0.40MM) CALE (T:0.40MM)		1				UR UR
	6E5–45567–60	SHIM (T:0.50MM) CALE (T:0.50MM)		1				UR UR
8	90340–08002	PLUG, STRAIGHT SCREW PLOT, FILETE DROIT		1				
9	688–45341–10	PLUG, DRAIN BOUCHON DE VIDANGE		1				
10	90430–08003	GASKET JOINT		2				
11	6E5–45536–00	SLEEVE, DRIVE SHAFT MANCHON, ARBRE MOTEUR		1				
12	6E5–45378–00	NIPPLE, HOSE RACCORD, TUYAU		1				
13	90445–07ME9	HOSE (L120) DURITE (L120)		1				X(25.3") X(25.3")
14	6E5–83558–10	END, NIPPLE RACCORD DE NIPPLE		1				
15	6E5–45321–00	PLATE PLAQUETTE		1				
16	93210–58144	O-RING JOINT TORIQUE		1				
17	93106–09014	OIL SEAL JOINT SPY		1				
18	90119–06286	BOLT, WITH WASHER BOULON, AVEC RONDELLE		3				
19	6L6–44150–02	SHIFT CAM ASSY CAME D'INVERSION		1				
20	99001–08600	CIRCLIP CIRCLIP		1				
21	61A–45538–00	SPACER 1 ENTRETOISE		1				

FIG. 33 LOWER CASING & DRIVE 3 — BOITIER D'HELICE TRANSMISSION3

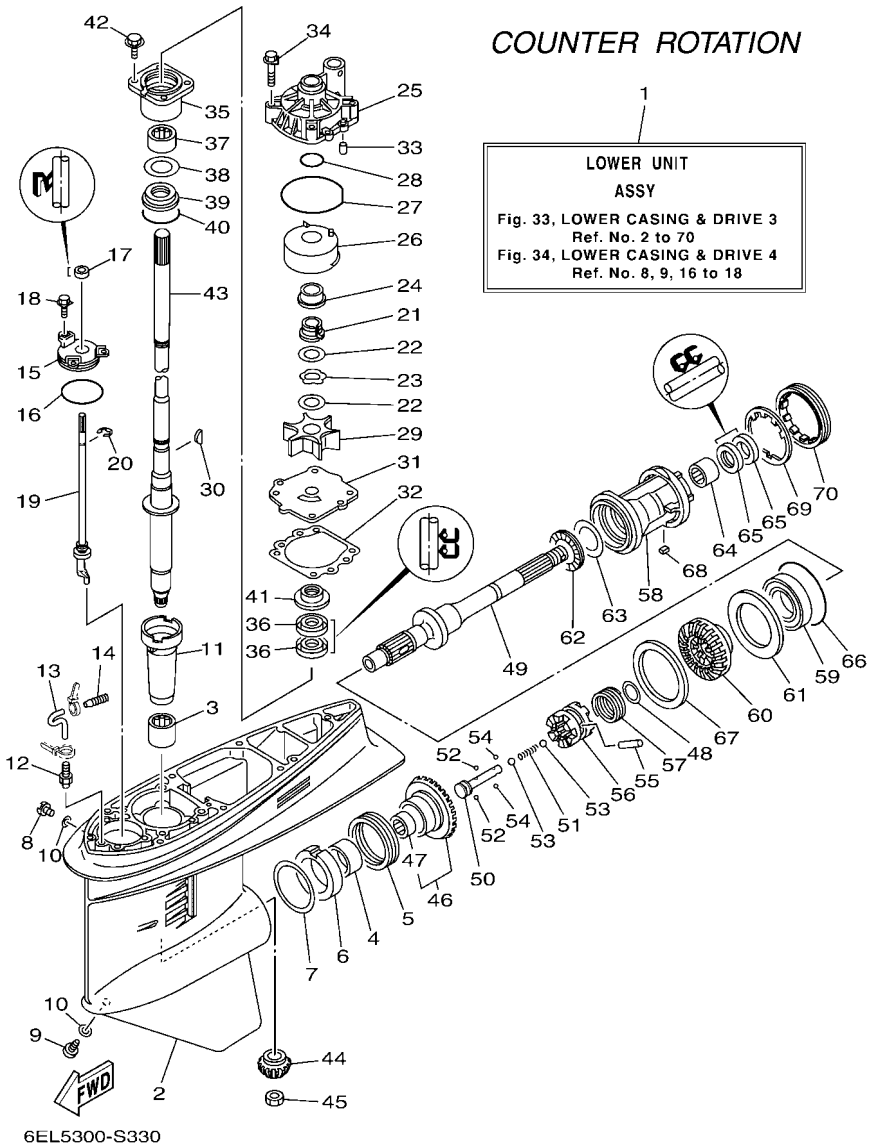

REF. NO.	PART NO. N° PIECES	DESCRIPTION DESCRIPTION	6EKC	6ELC				REMARKS REMARQUES
22	90201–22M01	WASHER, PLATE RONDELLE, PLATE		2				
23	90206–22M19	WASHER, WAVE RONDELLE, ONDULEE		1				
24	61A–45527–00	COLLAR, DRIVE SHAFT ENTRETOISE		1				
25	61A–44311–01	HOUSING, WATER PUMP CORPS, POMPE A EAU		1				
26	61A–44322–02	INSERT, CARTRIDGE CUVETTE		1				
27	93210–86M38	O-RING JOINT TORIQUE		1				
28	93210–37160	O-RING JOINT TORIQUE		1				
29	6E5–44352–01	IMPELLER TURBINE		1				
30	90280–04M05	KEY, WOODRUFF CLAVETTE, DEMI-LUNE		1				
31	6EK–44323–00	OUTER PLATE, CARTRIDGE PLAQUE EXTERIEURE		1				
32	6E5–44315–A0	GASKET, WATER PUMP JOINT, POMPE A EAU		1				
33	93606–12019	PIN, DOWEL GOUPILLE		2				
34	90119–08191	BOLT, WITH WASHER BOULON, AVEC RONDELLE		4				
35	6E5–45331–00–9S	HOUSING, BEARING FLASQUE, ROULEMENT		1				
36	93101–28M16	OIL SEAL JOINT SPY		2				
37	93317–330U2	BEARING ROULEMENT		1				
38	6E5–45587–01	SHIM (T:0.10MM) CALE (T:0.10MM)		1				UR UR
	6E5–45587–10	SHIM (T:0.12MM) CALE (T:0.12MM)		1				UR UR
	6E5–45587–20	SHIM (T:0.15MM) CALE (T:0.15MM)		1				UR UR
	6E5–45587–30	SHIM (T:0.18MM) CALE (T:0.18MM)		1				UR UR
	6E5–45587–40	SHIM (T:0.30MM) CALE (T:0.30MM)		1				UR UR
	6E5–45587–50	SHIM (T:0.40MM) CALE (T:0.40MM)		1				UR UR
	6E5–45587–60	SHIM (T:0.50MM) CALE (T:0.50MM)		1				UR UR
39	93341–930V2	BEARING CERVEAUX DE DIRECTION		1				
40	93210–55M14	O-RING JOINT TORIQUE		1				
41	6E5–45344–00	COVER, OIL SEAL FLASQE, JOINT D'HUILE		1				
42	97E95–08525	BOLT, HEXAGON W/W DEEP RECESS VIS HEXAGONAL AVC RONDELLE		4				

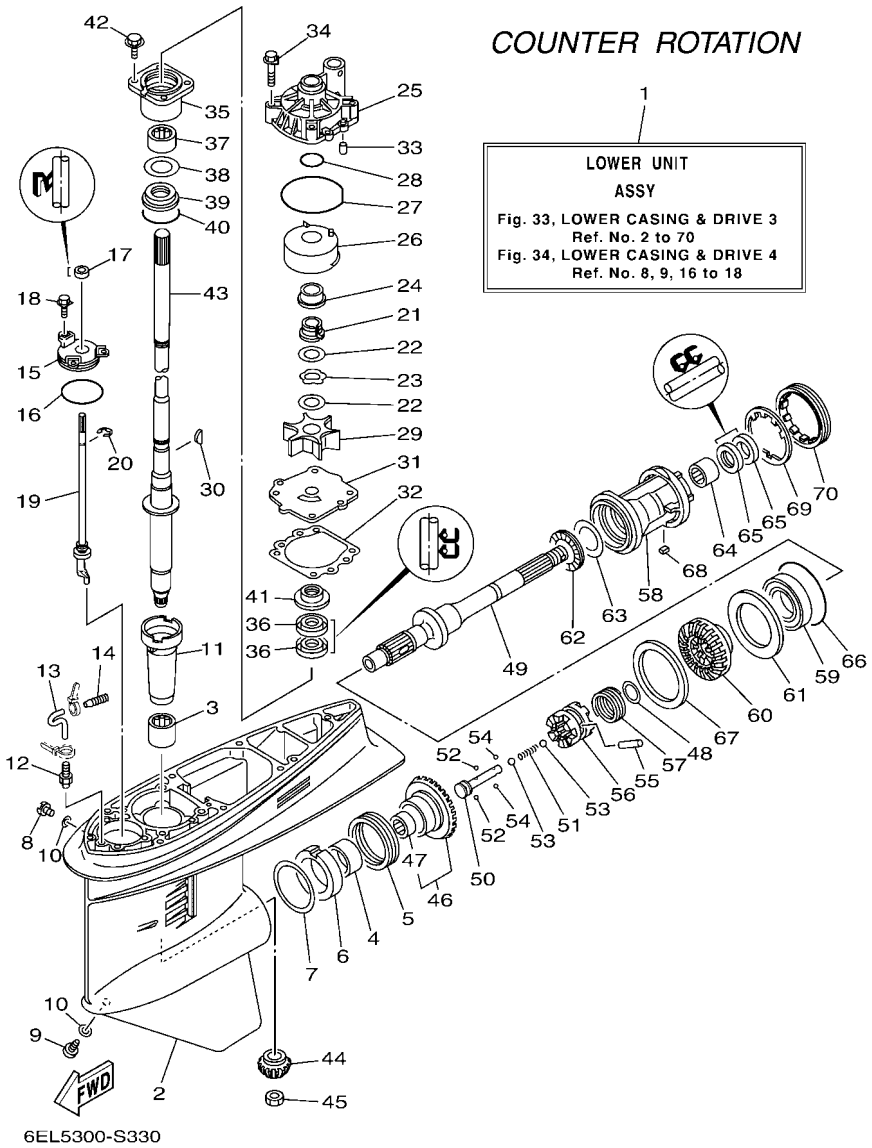

FIG. 33 LOWER CASING & DRIVE 3 — BOITIER D'HELICE TRANSMISSION3

REF. NO.	PART NO. N° PIECES	DESCRIPTION DESCRIPTION	6EKC	6ELC				REMARKS REMARQUES
43	6EK–45501–10	DRIVE SHAFT COMP. ARBRE MOTEUR COMP.		1				X(25.3") X(25.3")
44	68V–45551–00	PINION (13T) PIGNON D'ATTAQUE (13D)		1				
45	90170–16M01	NUT ECROU		1				
46	68W–45560–00	GEAR 1 (28T) PIGNON 1 (28T)		1				
47	93315–425U7	.BEARING .ROULEMENT		1				
48	90201–26M00	WASHER, PLATE RONDELLE, PLATE		1				
49	68W–45611–01	SHAFT, PROPELLER ARBRE, HELICE		1				
50	6E5–45634–02	SLIDE, SHIFT CONTRE-POUSSOIR		1				
51	90501–16M37	SPRING, COMPRESSION RESSORT, COMPRESSION		1				
52	93507–32009	BALL BILLE		2				
53	93511–32017	BALL BILLES		2				
54	93503–16003	BALL BILLES		2				
55	90250–08M07	PIN, STRAIGHT GOUPILLE, DROITE		1				
56	68V–45631–02	CLUTCH, DOG CRABOT		1				
57	6E5–45633–01	RING, CROSS PIN JONC, GOUPILLE CRABOT		1				
58	6L6–45332–00–CA	HOUSING, BEARING FLASQUE, ROULEMENT		1				
59	93332–000V7	BEARING ROULEMENT		1				
60	68W–45570–11	GEAR 2 (28T) PIGNON 2 (28T)		1				
61	6L6–45576–00	WASHER, THRUST 2 RONDELLE DE CALAGE 2		1				
62	93341–440U5	BEARING CERVEAUX DE DIRECTION		1				
63	6K1–45578–01	SHIM (T:0.10MM) CALE (T:0.10MM)		1				UR UR
	6K1–45578–10	SHIM (T:0.12MM) CALE (T:0.12MM)		1				UR UR
	6K1–45578–20	SHIM (T:0.15MM) CALE (T:0.15MM)		1				UR UR
	6K1–45578–30	SHIM (T:0.18MM) CALE (T:0.18MM)		1				UR UR
	6K1–45578–40	SHIM (T:0.30MM) CALE (T:0.30MM)		1				UR UR
	6K1–45578–50	SHIM (T:0.40MM) CALE (T:0.40MM)		1				UR UR
	6K1–45578–60	SHIM (T:0.50MM) CALE (T:0.50MM)		1				UR UR

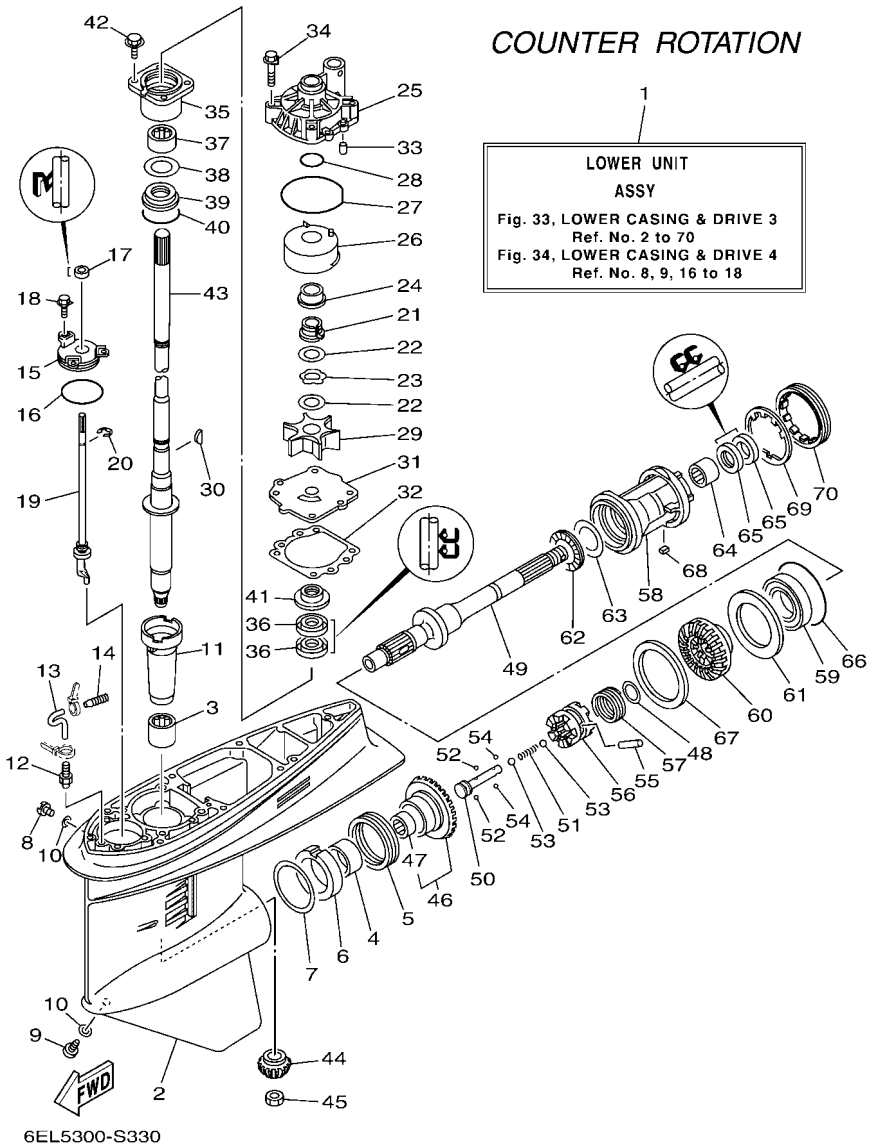

FIG. 33 LOWER CASING & DRIVE 3 — BOITIER D'HELICE TRANSMISSION3

REF. NO.	PART NO. N° PIECES	DESCRIPTION DESCRIPTION	6EKC	6ELC				REMARKS REMARQUES
64	93315–43061	BEARING ROULEMENT		1				
65	93101–30M17	OIL SEAL JOINT SPY		2				
66	93210–86M39	O-RING JOINT TORIQUE		1				
67	6L6–45577–00	SHIM (T:0.10MM) CALE (T:0.10MM)		1				UR UR
	6L6–45577–10	SHIM (T:0.12MM) CALE (T:0.12MM)		1				UR UR
	6L6–45577–20	SHIM (T:0.15MM) CALE (T:0.15MM)		1				UR UR
	6L6–45577–30	SHIM (T:0.18MM) CALE (T:0.18MM)		1				UR UR
	6L6–45577–40	SHIM (T:0.30MM) CALE (T:0.30MM)		1				UR UR
	6L6–45577–50	SHIM (T:0.40MM) CALE (T:0.40MM)		1				UR UR
	6L6–45577–60	SHIM (T:0.50MM) CALE (T:0.50MM)		1				UR UR
68	90282–04010	KEY, STRAIGHT CLAVETTE, DROITE		1				
69	688–45383–02	WASHER, CLAW FREIN D'ECROU		1				
70	688–45384–02	NUT ECROU		1				

FIG. 34 LOWER CASING & DRIVE 4 — BOITIER D'HELICE TRANSMISSION4

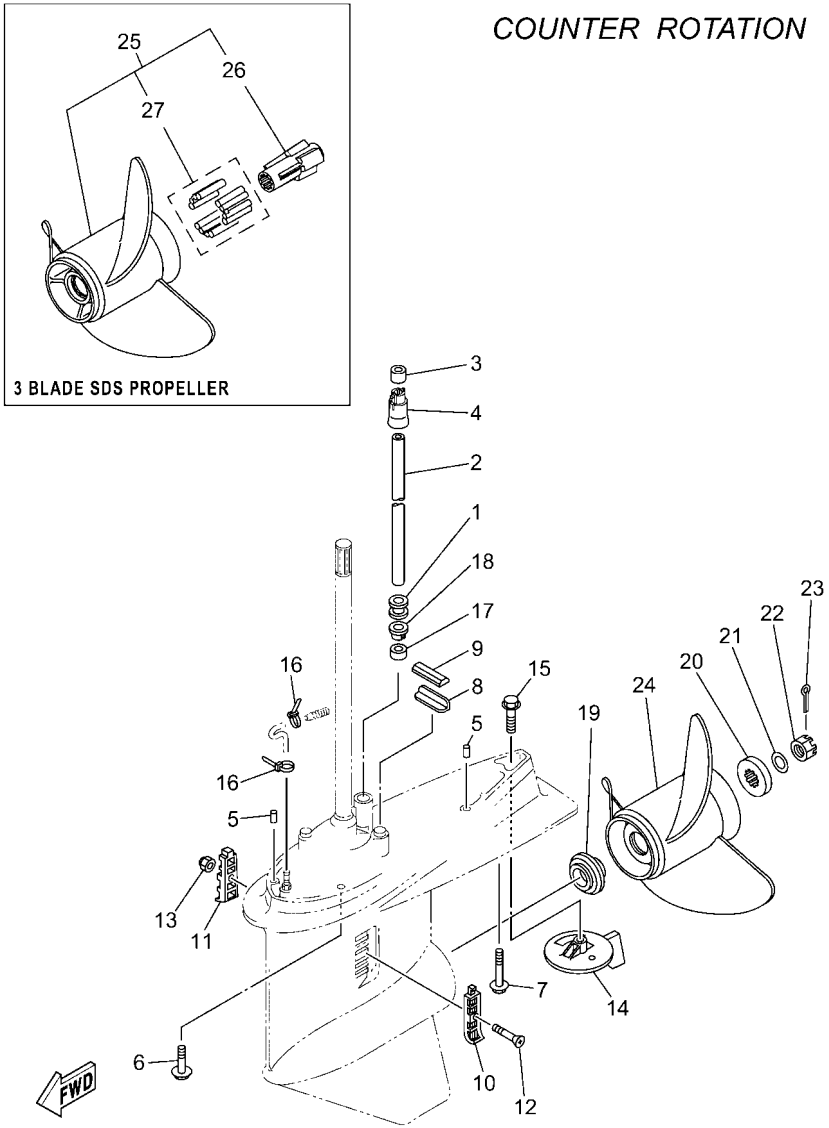

REF. NO.	PART NO. N° PIECES	DESCRIPTION DESCRIPTION	6EKC	6ELC				REMARKS REMARQUES
1	6E5–44366–01	DAMPER, WATER SEAL 2 JOINT, TUBE D'EAU 2		1				
2	90440–16002	PIPE (L294) DURITE (L294)		1				X(25.3") X(25.3")
3	6EK–44365–01	DAMPER, WATER SEAL 1 JOINT, TUBE D'EAU 1		1				
4	6EK–44379–00	GUIDE, WATER TUBE GUIDE DE TUBE D'EAU		1				
5	93608–12M05	PIN, DOWEL AXE		2				
6	97E95–10545	BOLT, HEXAGON W/W DEEP RECESS VIS HEXAGONAL AVC RONDELLE		6				
7	90119–10071	BOLT, WITH WASHER BOULON, AVEC RONDELLE		1				
8	663–45376–00	GUIDE, SEAL DAMPER BUTEE, JOINT CAOUTCHOUC		1				
9	688–45375–00	DAMPER, SEAL BOURRELET, CAOUTCHOUC		1				
10	688–45214–02	COVER, WATER INLET 1 GRILLE, ENTREE D'EAU 1		1				
11	688–45215–02	COVER, WATER INLET 2 GRILLE, ENTREE D'EAU 2		1				
12	90152–05M07	SCREW, COUNTERSUNK VIS, TETE NOYEE		1				
13	90185–05002	NUT, NYLON ECROU,AUTO-BLOQUANT		1				
14	6L6–45371–00	TAB-TRIM ANODE DERIVE		1				
15	90105–10M00	BOLT, FLANGE BOULON, A COLLERETTE		1				
16	90465–11M10	CLAMP BRIDE		2				
17	6E5–44365–01	DAMPER, WATER SEAL 1 JOINT, TUBE D'EAU 1		1				
18	6E5–44312–00	COVER, WATER PUMP HOUSING COUVERCLE		1				
19	6E5–45987–01	SPACER 1 ENTRETOISE 1		1				
20	688–45997–01	SPACER 2 ENTRETOISE 2		1				
21	92990–18200	WASHER RONDELLE, PLATE		1				
22	90171–18M04	NUT, CASTLE ECROU, CRENELE		1				
23	91490–40030	PIN. COTTER GOUPILLE		1				
24	6L6–45930–01	PROPELLER (3X13"X17"-KL) HELICE (3X13"X17"-KL)		1				UR UR
	6L6–45970–00	PROPELLER (3X13"X19"-KL) HELICE (3X13"X19"-KL)		1				UR UR
	6L6–45972–00	PROPELLER (3X13"X21"-KL) HELICE (3X13"X21"-KL)		1				UR UR
25	6N4–45970–00	PROPELLER (3X13-1/8"X14"-KL) HELICE (3X13-1/8"X14"-KL)		1				UR SDS 3 BLADE UR SDS 3 BLADE

FIG. 34 LOWER CASING & DRIVE 4 — BOITIER D'HELICE TRANSMISSION4

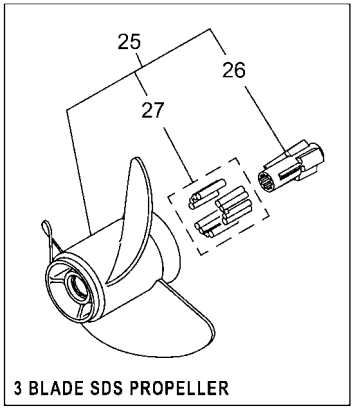

COUNTER ROTATION

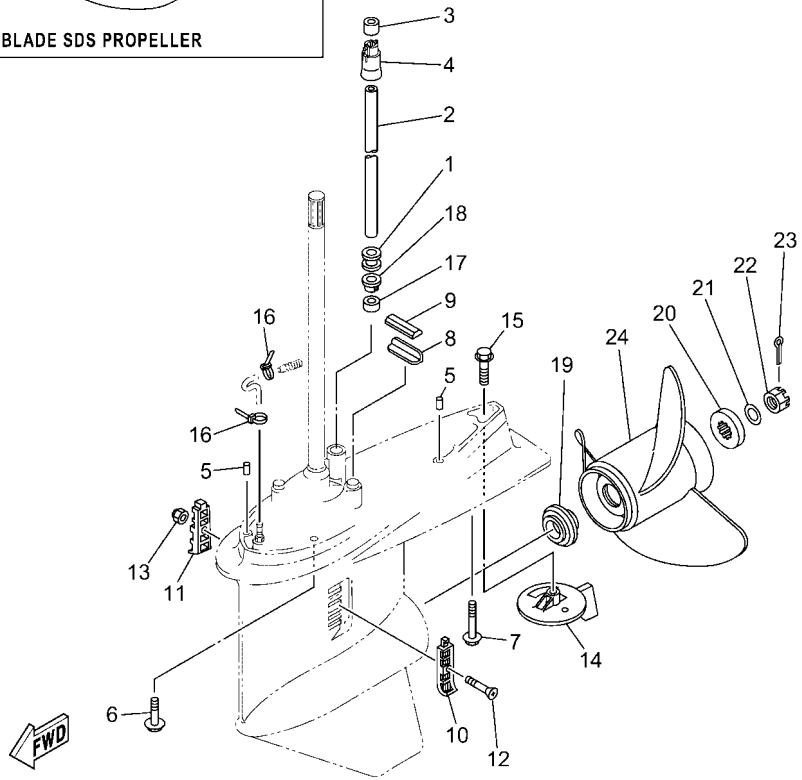

6ELC100-Z320

REF. NO.	PART NO. N° PIECES	DESCRIPTION DESCRIPTION	6EKC	6ELC				REMARKS REMARQUES
25	6N4–45972–00	PROPELLER (3X13-1/8"X16"-KL) HELICE (3X13-1/8"X16"-KL)		1				UR SDS 3 BLADE UR SDS 3 BLADE
	6N4–45974–00	PROPELLER (3X13-1/8"X18"-KL) HELICE (3X13-1/8"X18"-KL)		1				UR SDS 3 BLADE UR SDS 3 BLADE
	6N4–45978–00	PROPELLER (3X13-1/8"X20"-KL) HELICE (3X13-1/8"X20"-KL)		1				UR SDS 3 BLADE UR SDS 3 BLADE
26	6EK–45982–00	.BUSH, PROPELLER .DOUILLE DE HELICE		1				
27	6EK–45C82–09	.DAMPER RUBBER, PROPELLER 2 .AMORTISSEUR HELICE 2		1				

FIG. 35 STEERING GUIDE — FIXATION DE DIRECTION

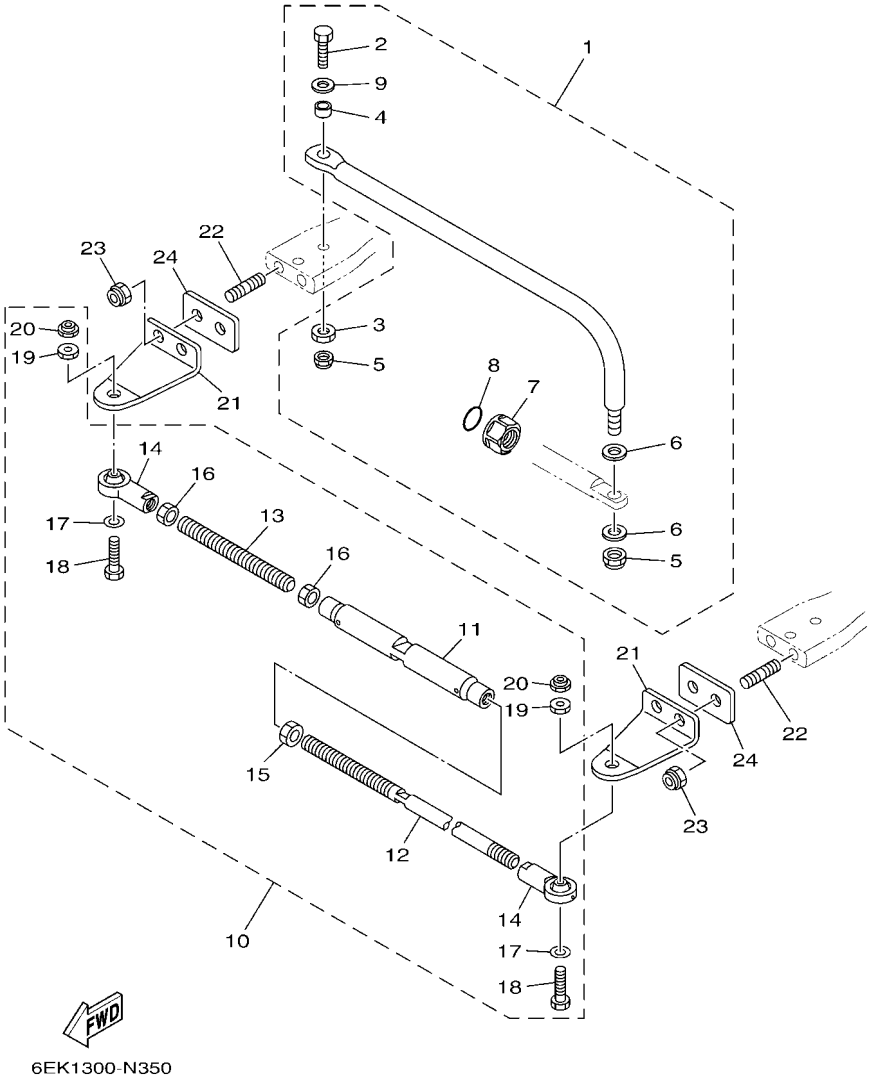

REF. NO.	PART NO. N° PIECES	DESCRIPTION DESCRIPTION	6EKC	6ELC				REMARKS REMARQUES
1	6EK–61350–00	STEERING GUIDE ATTACHMENT KIT FIXATIONS DE DIRECTION	1					AP AP
2	6E5–61355–00	.BOLT .BOULON	1					
3	90170–09M03	.NUT .ECROU	1					
4	90387–10M42	.COLLAR .COLLERETTE	1					
5	90185–09M01	.NUT, SELF-LOCKING .ECROU,AUTO-BLOQUANT	2					
6	90201–10M20	.WASHER, PLATE .RONDELLE, PLATE	2					
7	6E5–43145–01	.CAP, CLAMP BRACKET .CAPUCHON, PRESSE	1					
8	93210–16275	.O-RING .JOINT TORIQUE	1					
9	90201–10081	.WASHER, PLATE .RONDELLE, PLATE	1					
10	6E5–61310–00	TIE BAR ASSY (L:600-800MM) ASSEMBLAGE DU TIRANT (L:600-80		1				AP AP
11	6E5–61313–00	.ADJUSTER .TENDEUR		1				
12	6E5–61311–11	.TIE BAR .BARRE D'ACCOUPLEMENT		1				
13	6E5–61315–00	.TIE BAR .BARRE D'ACCOUPLEMENT		1				
14	6E5–61303–01	.STEERING AXLE COMP. .AXLE COMP.		2				
15	90170–14M06	.NUT .ECROU		1				
16	95380–14700	.NUT .ECROU		2				
17	90201–10M76	.WASHER, PLATE .RONDELLE, PLATE		2				
18	90101–09M70	.BOLT .BOULON		2				
19	90170–09M05	.NUT .ECROU		2				
20	90185–09M01	.NUT, SELF-LOCKING .ECROU,AUTO-BLOQUANT		2				
21	688–48511–02	HOOK, STEERING ATTACHE, DIRECTION		2				AP AP
22	90116–10063	BOLT, STUD GOUJON		4				AP AP
23	90185–10027	NUT, SELF-LOCKING ECROU,AUTO-BLOQUANT		4				AP AP
24	6EK–42121–00	BRACKET SUPPORT		2				AP AP

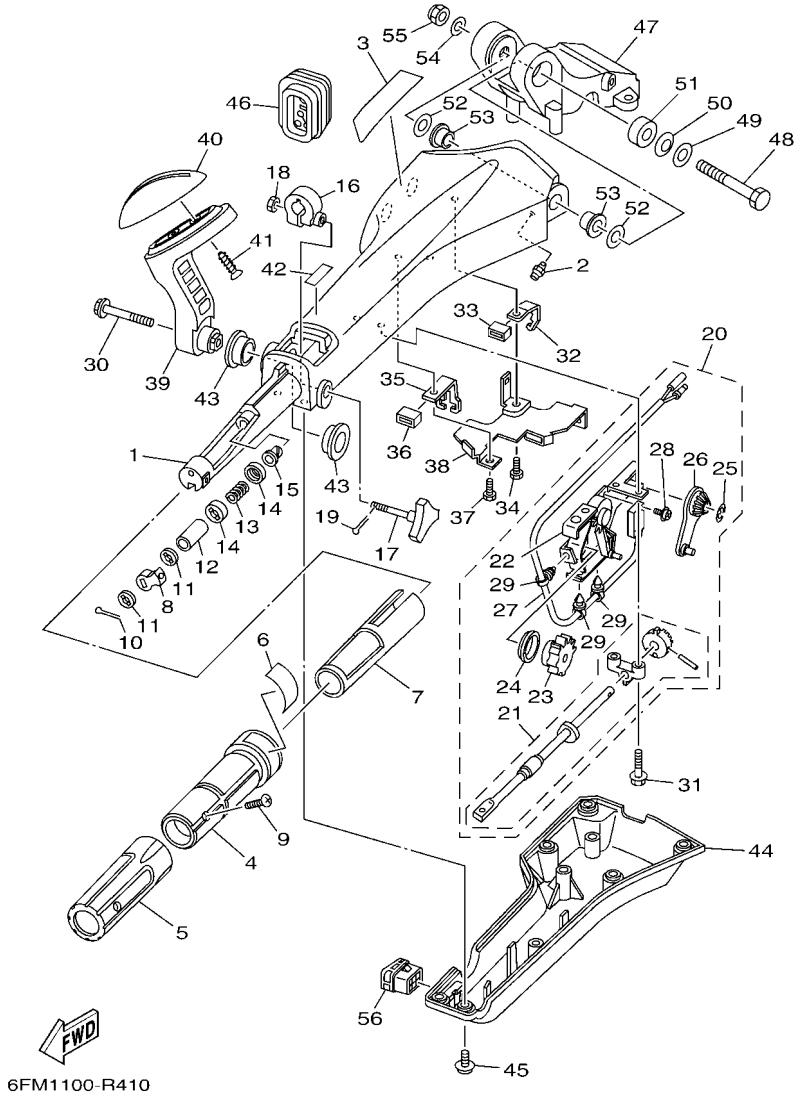

FIG. 36 OPTIONAL PARTS 1 — PIECES OPTIONNELLES 1

REF. NO.	PART NO. N° PIECES	DESCRIPTION DESCRIPTION	6EKC	6ELC				REMARKS REMARQUES
1	6X4–42111–02–8D	HANDLE, STEERING POIGNEE	1					
2	93700–06002	NIPPLE, GREASE PION	1					
3	6X4–48215–00	GRAPHIC ADHESIF	1					
4	6X4–42119–01	GRIP, STEERING HANDLE POIGNEE, BARRE FRANCHE	1					
5	6X4–42177–01	RUBBER, HANDLE CAOUTCHOUC, POIGNEE	1					
6	6X4–42137–00	INDICATOR, THROTTLE INDICATEUR, ACCELERATION	1					
7	6X4–41291–00	BUSHING COUSSINET	1					
8	6X4–44139–01	COLLAR COLLIER	1					
9	90152–05007	SCREW, COUNTERSUNK VIS, TETE NOYEE	1					
10	91490–20010	PIN. COTTER GOUPILLE	1					
11	6X4–44177–00	WASHER RONDELLE	2					
12	6X4–42128–00	COLLAR, DISTANCE 1 COLLIER, D'ENTRETOISE 1	1					
13	90501–23215	SPRING, COMPRESSION RESSORT, COMPRESSION	1					
14	6X4–44188–00	WASHER RONDELLE	2					
15	90386–08032	BUSH DOUILLE	1					
16	63D–42126–00	FRICTION, STEERING HANDLE GRIP CUVETTE, POIGNEE DE DIRECTION	1					
17	6X4–48154–00	KNOB, THROTTLE BOUTON, ACCELERATEUR	1					
18	95380–06600	NUT, HEXAGON ECROU	1					
19	91490–20010	PIN. COTTER GOUPILLE	1					
20	6X4–44100–01	SHIFT LINK ASSY MAILLON DE SELECTEUR	1					
21	6X4–42115–00	.SHAFT, STEERING HANDLE .AXE, BARRE FRANCHE	1					
22	6X4–44102–00	.SHIFT ASSIST ASSY. .SELECTEUR DE MAINTIEN	1					
23	6X4–47731–01	.GEAR, DRIVE .PIGNON D'ENTRAINEMENT	1					
24	6X4–44132–00	.BUSHING .COUSSINET	1					
25	6X4–14137–00	.CLIP .JONC	1					
26	6X4–48261–00	.ARM, THROTTLE .BRAS, ACCELERATION	1					
27	6X4–82540–00	.NEUTRAL SWITCH ASSY .CONTACTEUR DE POINT-MORT	1					

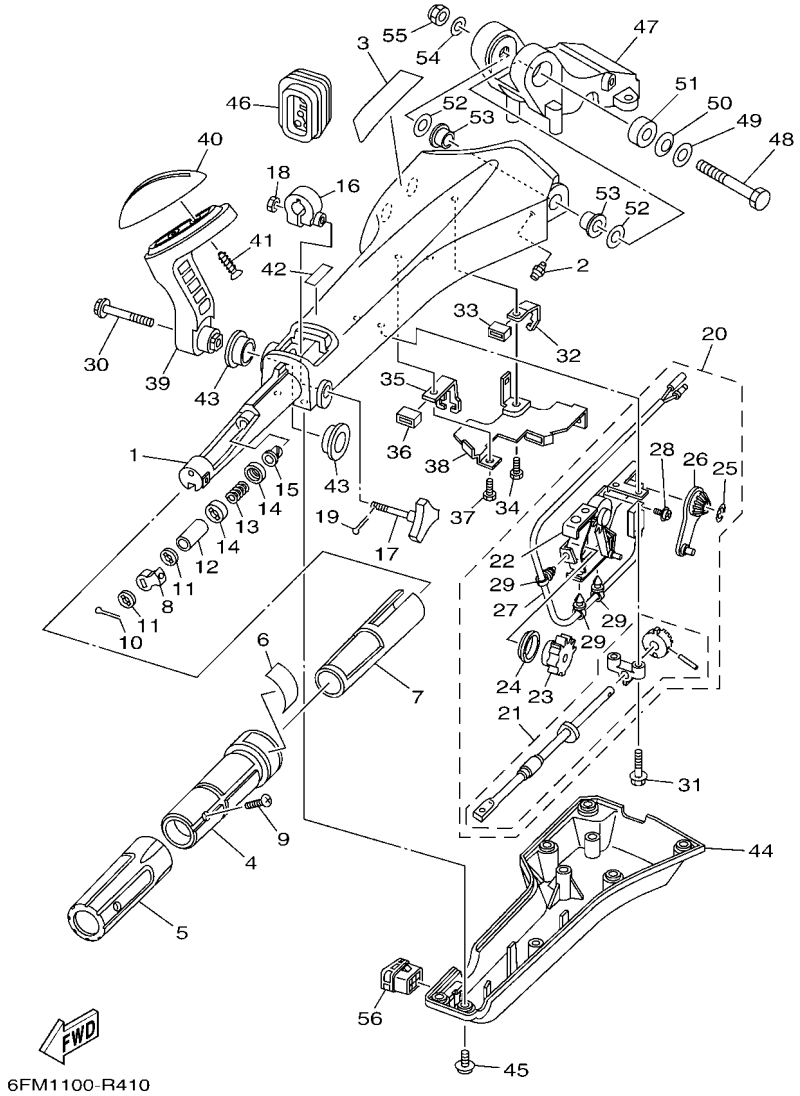

FIG. 36 OPTIONAL PARTS 1 — PIECES OPTIONNELLES 1

REF. NO.	PART NO. N° PIECES	DESCRIPTION DESCRIPTION	6EKC	6ELC				REMARKS REMARQUES
28	703–48129–00	.SCREW 3 .VIS 3	2					
29	6X4–42821–00	.BAND, CLAMP .BRIDE, COLLIER	3					
30	97E95–08540	BOLT, HEXAGON W/W DEEP RECESS VIS HEXAGONAL AVC RONDELLE	1					
31	97E95–06530	BOLT, HEXAGON W/W DEEP RECESS VIS HEXAGONAL AVC RONDELLE	2					
32	6X4–48538–00	CLAMP, CABLE 1 COLLIER	1					
33	6X4–26367–01	PROTECTOR PROTECTEUR	1					
34	97D95–06014	BOLT, HEXAGON DEEP RECESS VIS HEXAGONAL	1					
35	6X4–48538–10	CLAMP, CABLE 1 COLLIER	1					
36	6X4–26367–01	PROTECTOR PROTECTEUR	1					
37	97D95–06014	BOLT, HEXAGON DEEP RECESS VIS HEXAGONAL	1					
38	6X4–42159–00	STAY SUPPORT	1					
39	6X4–44159–A0–8D	HANDLE, GEAR SHIFT POIGNEE, LEVIER D'EMBRAYAGE	1					
40	6X4–44173–00	LEVER, SHIFT CONTROL POIGNEE, INVERSION	1					
41	97780–60920	SCREW, TAPPING VIS, TETE BOMBEE	2					
42	6X3–44191–00	INDICATOR, SHIFT ETIQUETTE, EMBRAYAGE	1					
43	90386–26MA3	BUSH DOUILLE	2					
44	6X4–42131–11	COVER, HANDLE STEERING COUVERCLE	1					
45	97985–06216	SCREW, WITH WASHER VIS, AVEC RONDELLE	6					
46	6X4–42725–01	GROMMET PASSE-FIL	1					
47	63D–42121–22–8D	BRACKET SUPPORT	1					
48	90101–12014	BOLT BOULON	1					
49	92990–12200	WASHER, PLAIN RONDELLE, PLATE	1					
50	90206–12M22	WASHER, WAVE RONDELLE, ONDULEE	1					
51	90387–12M02	COLLAR COLLERETTE	1					
52	90201–12035	WASHER, PLATE RONDELLE, PLATE	2					
53	90386–12003	BUSH DOUILLE	2					
54	92990–12600	WASHER, PLATE RONDELLE, PLATE	1					

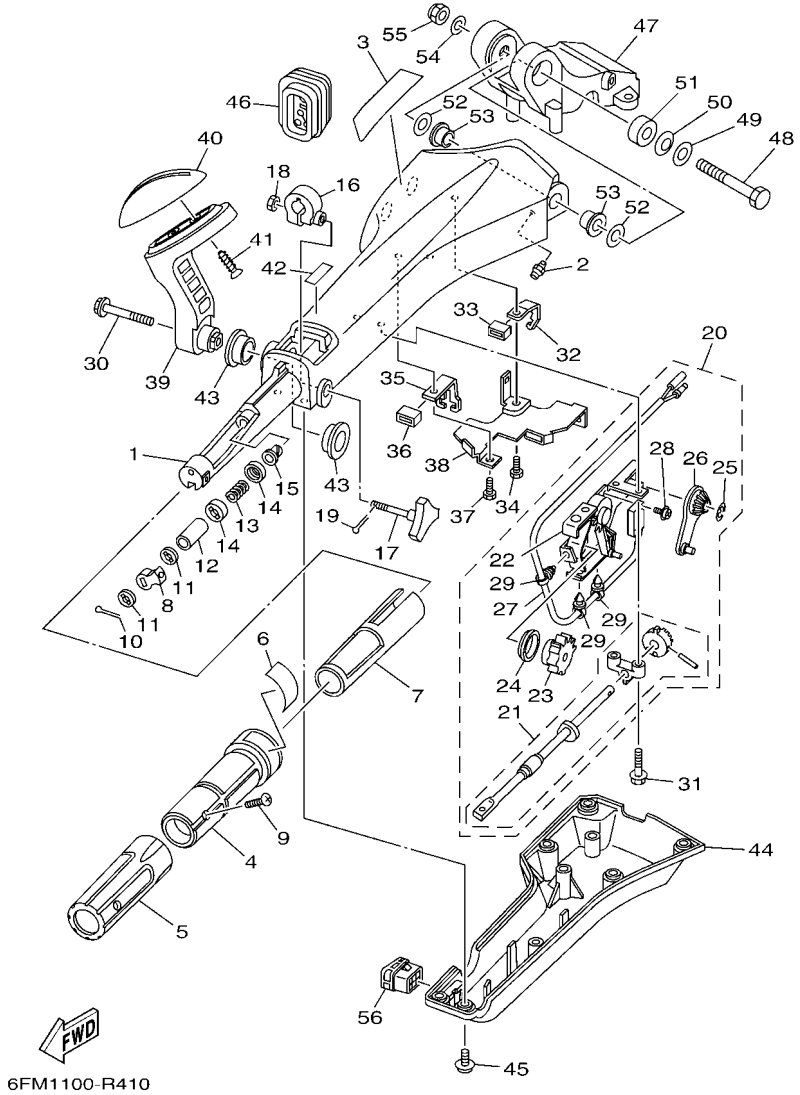

FIG. 36 OPTIONAL PARTS 1 — PIECES OPTIONNELLES 1

REF. NO.	PART NO. N° PIECES	DESCRIPTION DESCRIPTION	6EKC	6ELC				REMARKS REMARQUES
55	90185–12M12	NUT, SELF-LOCKING ECROU,AUTO-BLOQUANT	1					
56	6X4–42728–10	CAP CAPUCHON	1					

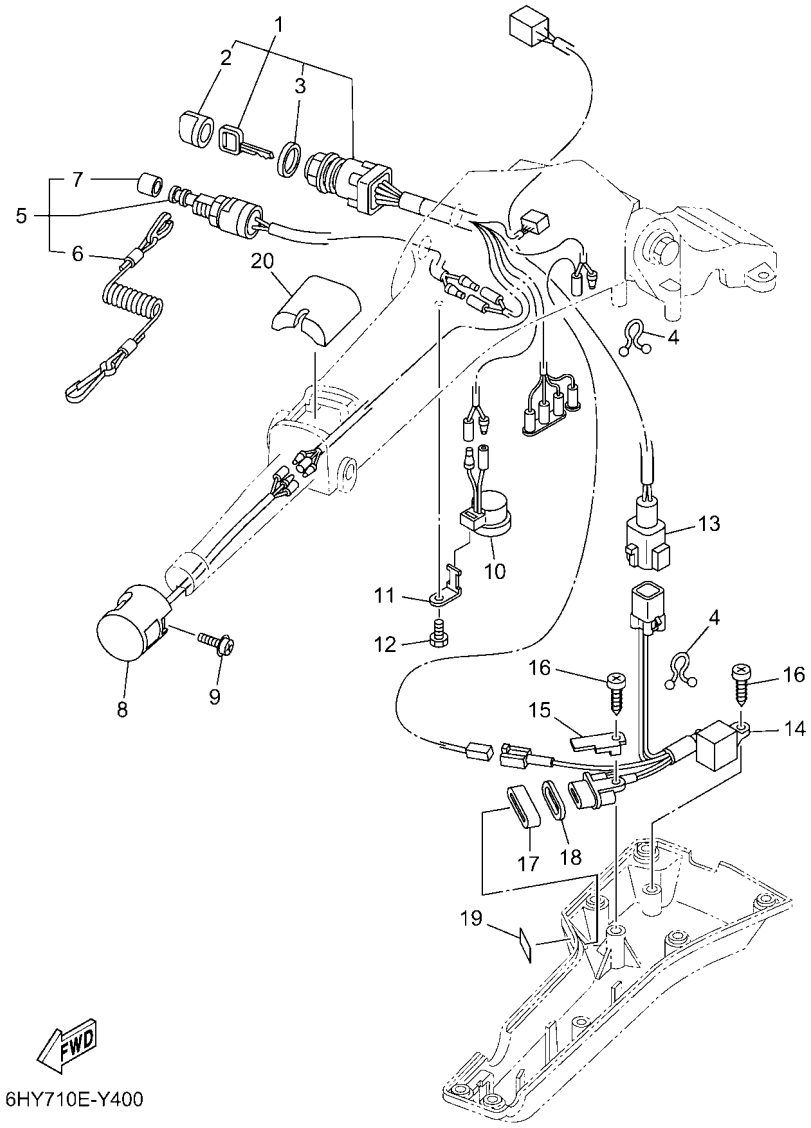

FIG. 37 OPTIONAL PARTS 2 — PIECES OPTIONNELLES 2

REF. NO.	PART NO. N° PIECES	DESCRIPTION DESCRIPTION	6EKC	6ELC				REMARKS REMARQUES
1	6X4–82510–42	MAIN SWITCH ASSY CONTACTEUR A CLEF COMPLET	1					
2	676–82577–01	.CAP, KEY .CABOCHON	1					
3	703–82532–00	.CAP .COUVERCLE	1					
4	90464–08M07	CLAMP BRIDE	2					
5	69W–82575–00	ENGINE STOP SWITCH ASSY COUPE CIRCUIT CPLT	1					
6	682–82556–00	.LANYARD, STOP SWITCH .CORDON DU COUPE CIRCUIT	1					
7	689–8257Y–00	.CAP .COUVERCLE	1					
8	6X4–82563–01	TRIM & TILT SWITCH ASSY INCLINER ET PARER COMMUTATEUR	1					
9	97980–06216	SCREW, WITH WASHER VIS, AVEC RONDELLE	1					
10	6X4–83383–00	BUZZER RONFLEUR	1					
11	6X4–83386–00	STAY, BUZZER SUPPOR, RONFLEUR	1					
12	97D95–06014	BOLT, HEXAGON DEEP RECESS VIS HEXAGONAL	1					
13	6X4–83653–20	WIRE, LEAD (L:700MM) FIL (L:700MM)	1					
14	6C5–84301–10	PILOT LIGHT ASSY 1 LAMPE-TEMOIN 1	1					
15	6X4–44114–00	STOPPER PLAQUETTE	1					
16	97780–60620	SCREW, TAPPING VIS, TETE BOMBEE	2					
17	6X4–42727–01	GROMMET PASSE-FIL	1					
18	6FM–83589–00	GASKET GARNITURE	1					
19	6X4–85415–00	MARK, SIGNAL LAMP ETIQUETTE	1					
20	6X4–81942–01	COVER COUVERCLE	1					

FIG. 38 OPTIONAL PARTS 3 — PIECES OPTIONNELLES 3

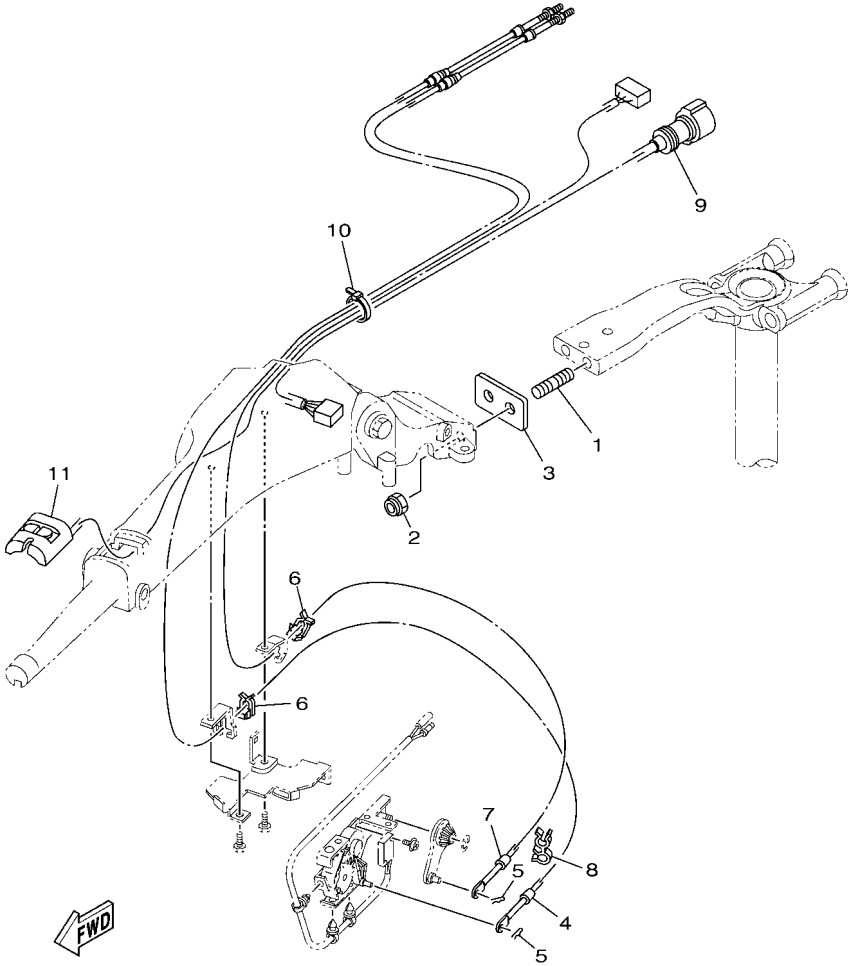

6EK4100-R360

REF. NO.	PART NO. N° PIECES	DESCRIPTION DESCRIPTION	6EKC	6ELC				REMARKS REMARQUES
1	90116–10063	BOLT, STUD GOUJON	2					
2	90185–10027	NUT, SELF-LOCKING ECROU,AUTO-BLOQUANT	2					
3	6EK–42121–00	BRACKET SUPPORT	1					
4	6EK–48321–00	CABLE CABLE	1					
5	90468–10005	CLIP JONC	2					
6	63D–48538–00	CLAMP, CABLE 1 COLLIER	2					
7	6EK–26301–00	THROTTLE CABLE ASSY CABLE D'ACCELERATEUR	1					
8	90464–09M42	CLAMP BRIDE	1					
9	6X4–82586–11	EXT., WIRE HARNESS (L:950MM) EXT, FAISCEAU DE FILS (L:950MM	1					
10	90465–13M24	CLAMP BRIDE	1					
11	6X4–81860–00	SWITCH ASSY COMMUTATEUR COMPLET	1					

FIG. 39 OPTIONAL PARTS 4 — PIECES OPTIONNELLES 4

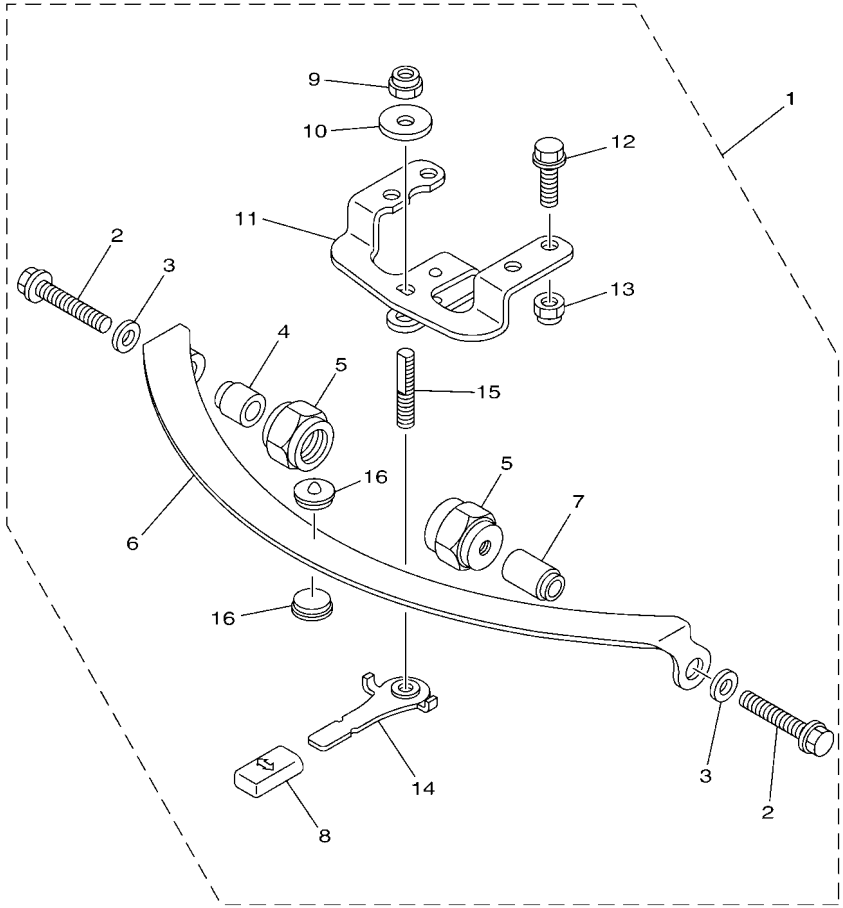

6FP1200-R390

REF. NO.	PART NO. N° PIECES	DESCRIPTION DESCRIPTION	6EKC	6ELC				REMARKS REMARQUES
1	67G–42508–12	STEERING FRICTION ASSY DIRECTION FRICTION (ENS.)	1					
2	90119–08193	.BOLT, WITH WASHER .BOULON, AVEC RONDELLE	2					
3	90201–08M01	.WASHER, PLATE .RONDELLE, PLATE	2					
4	67G–42541–00	.PIPE 1 .TUYAU 1	1					
5	67G–42546–00	.NUT .ECROU	2					
6	63D–42527–00	.PLATE, FRICTION .PLAQUE, FRICTION	1					
7	67G–42541–10	.PIPE 1 .TUYAU 1	1					
8	682–43318–01	.COVER .CAPUCHON	1					
9	90185–10M14	.NUT, SELF-LOCKING .ECROU,AUTO-BLOQUANT	1					
10	90201–10M76	.WASHER, PLATE .RONDELLE, PLATE	1					
11	6X4–42526–00	.PLATE, FRICTION .PLAQUE, FRICTION	1					
12	97E95–08525	.BOLT, HEXAGON W/W DEEP RECESS .VIS HEXAGONAL AVC RONDELLE	2					
13	90185–08057	.NUT, SELF-LOCKING .ECROU,AUTO-BLOQUANT	2					
14	67G–42561–00	.KNOB, STEERING LOCK .BOUTON	1					
15	67G–42562–00	.SHAFT, STEERING LOCK .ARBRE,ANTIVOL DE DIRECTION	1					
16	63D–42528–00	.PLATE, FRICTION .PLAQUE, FRICTION	2					

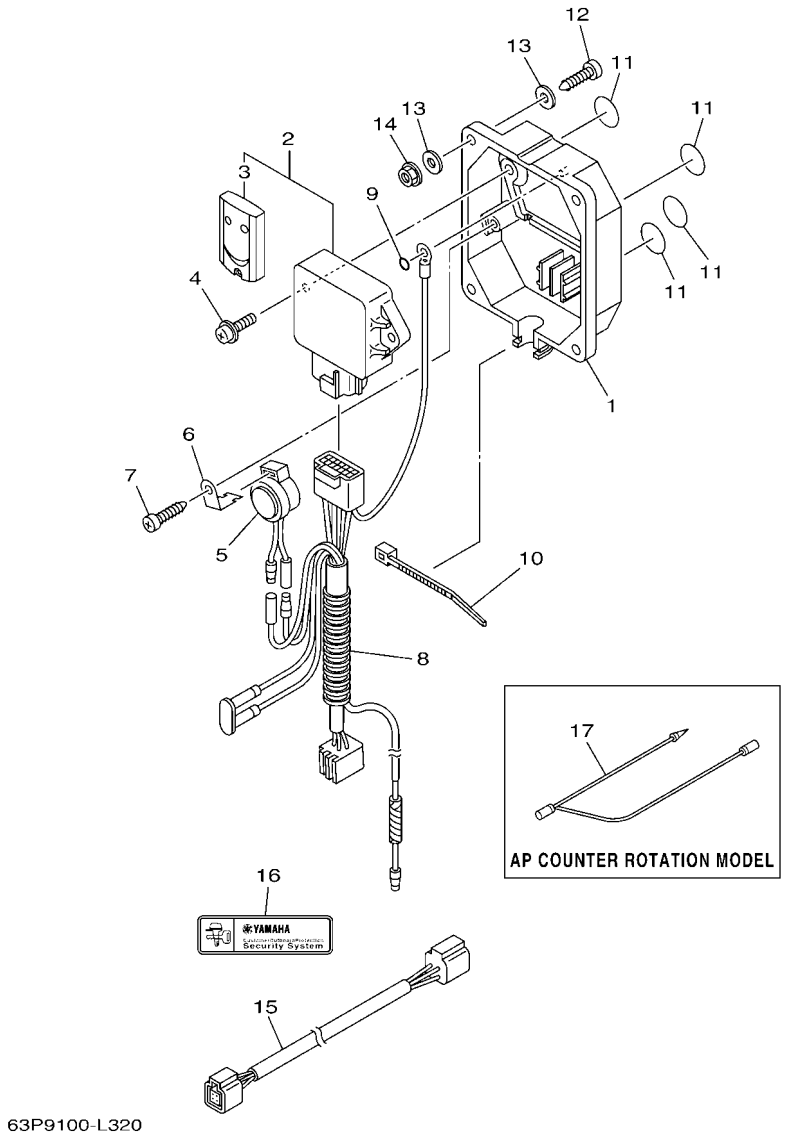

FIG. 40 OPTIONAL PARTS 5 — PIECES OPTIONNELLES 5

REF. NO.	PART NO. N° PIECES	DESCRIPTION DESCRIPTION	6EKC	6ELC				REMARKS REMARQUES
1	6Y8–86267–00	CASE COMPLETE 1 CARTER (ENS.) 1	1					
2	6Y8–86260–03	REMOTE CONTROL UNIT ASSY UNITE DE TELECOMMANDE (ENS.)	1					
3	6AA–86261–01	.XMTR. COMP. .XMTR. COMP.	2					
4	97980–06216	SCREW, WITH WASHER VIS, AVEC RONDELLE	2					
5	6X4–83383–00	BUZZER RONFLEUR	1					
6	6X4–83386–00	STAY, BUZZER SUPPOR, RONFLEUR	1					
7	97780–60620	SCREW, TAPPING VIS, TETE BOMBEE	1					
8	6Y8–82509–10	WIRE, SUB LEAD FIL, SECONDAIRE	1					
9	93210–04279	O-RING JOINT TORIQUE	1					
10	90465–11M10	CLAMP BRIDE	1					
11	6Y8–8454G–00	PATCH 1 TAMPON 1	4					
12	90167–06M00	SCREW, TAPPING VIS, TETE FRAISEE	4					UR UR
	97880–06035	SCREW, PAN HEAD VIS, TETE TRONCONIQUE	4					UR UR
13	90201–06M30	WASHER, PLATE RONDELLE, PLATE	8					
14	95780–06300	NUT, FLANGE ECROU	4					
15	6Y8–82521–11	2FT PIGTAIL BUS FAISCEAU (L: 2FT.)	1					
16	6Y8–48277–00	STICKER 1 ETIQUETTE 1	4					
17	6H5–81315–00	LEAD WIRE ASSY FIL		1				AP AP

FIG. 41 OPTIONAL PARTS 6 — PIECES OPTIONNELLES 6

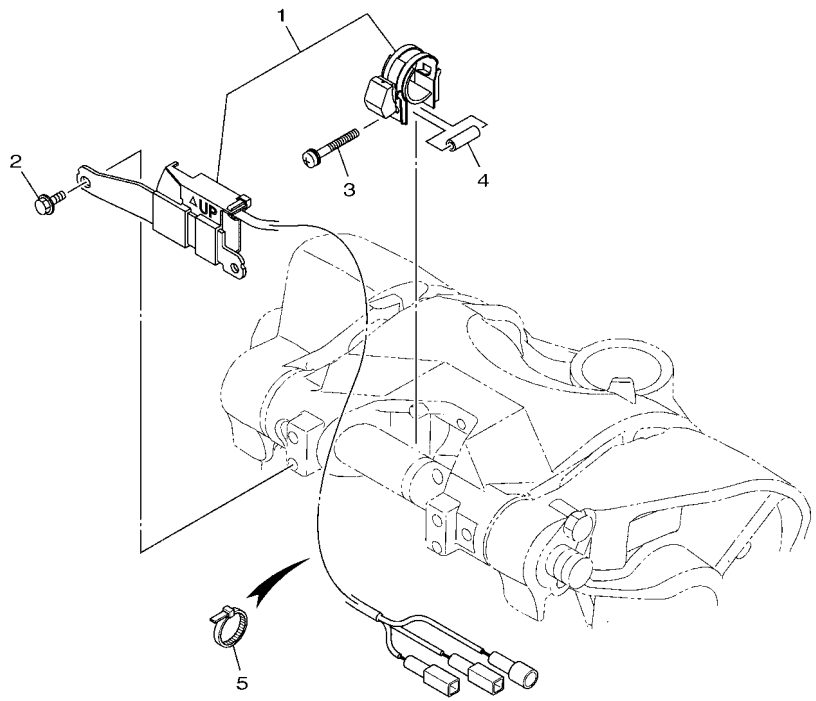

6EK3100-Q390

REF. NO.	PART NO. N° PIECES	DESCRIPTION DESCRIPTION	6EKC	6ELC				REMARKS REMARQUES
1	63P–825E0–02	TILT LIMIT SWITCH ASSY COMMUTATEUR, LIMIT INCLINAISON	1	1				
2	97E95–06516	BOLT, HEXAGON W/W DEEP RECESS VIS HEXAGONAL AVC RONDELLE	2	2				
3	90159–05059	SCREW, WITH WASHER VIS, AVEC RONDELLE	1	1				
4	90387–05004	COLLAR COLLERETTE	1	1				
5	90465–11M10	CLAMP BRIDE	5	5				

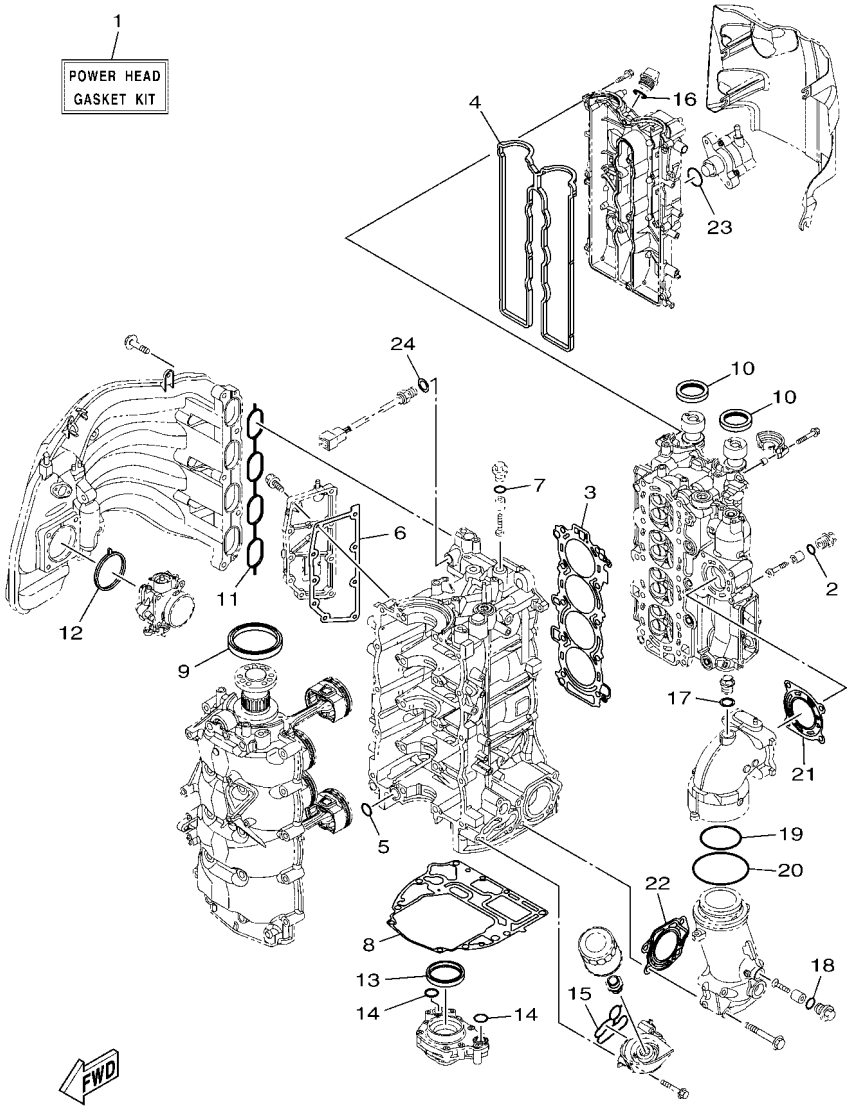

FIG. 42 REPAIR KIT 1 — KITS DE REPARATION 1

REF. NO.	PART NO. N° PIECES	DESCRIPTION DESCRIPTION	6EKC	6ELC				REMARKS REMARQUES
1	6EK–W0001–02	POWER HEAD GASKET KIT POCHETTE DE JINTS TETE MOTRICE	1	1				
2	93210–13M63	.O-RING .JOINT TORIQUE	1	1				
3	6EK–11181–00	.GASKET, CYLINDER HEAD 1 .JOINT, DE CULASSE 1	1	1				
4	6EK–11193–00	.GASKET, HEAD COVER 1 .JOINT, COUVERCLE DE CULASSE 1	1	1				
5	93210–19MJ1	.O-RING .JOINT TORIQUE	1	1				
6	6EK–15353–01	.GASKET, DRAIN .JOINT, PLOT DE VIDANGE	1	1				
7	93210–13M63	.O-RING .JOINT TORIQUE	1	1				
8	6EK–11351–01	.GASKET, CYLINDER .JOINT, D'EMBASE	1	1				
9	93102–85008	.OIL SEAL .JOINT SPY	1	1				
10	93102–38008	.OIL SEAL .JOINT SPY	2	2				
11	6EK–13645–00	.GASKET, MANIFOLD 1 .JOINT, TUBULURE 1	1	1				
12	6EK–13646–00	.GASKET, MANIFOLD 2 .JOINT, TUBULURE 2	1	1				
13	69J–11355–00	.SEAL, CYLINDER 1 .JOINT, SPY CYLINDRE	1	1				
14	93210–19MJ1	.O-RING .JOINT TORIQUE	2	2				
15	6EK–13475–00	.GASKET .JOINT	1	1				
16	93210–24M79	.O-RING .JOINT TORIQUE	1	1				
17	90201–186F1	.WASHER, PLATE .RONDELLE, PLATE	1	1				
18	93210–13M63	.O-RING .JOINT TORIQUE	1	1				
19	93210–64001	.O-RING .JOINT TORIQUE	1	1				
20	93210–84001	.O-RING .JOINT TORIQUE	1	1				
21	6EK–41114–01	.GASKET, EXHAUST OUTER COVER .JOINT, COUVERCLE D'ECHAPPEMENT	1	1				
22	6EK–41124–01	.GASKET, EXHAUST OUTER COVER .JOINT, COUVERCLE D'ECHAPPEMENT	1	1				
23	93210–30682	.O-RING .JOINT TORIQUE	1	1				
24	90430–14115	.GASKET .JOINT	1	1				

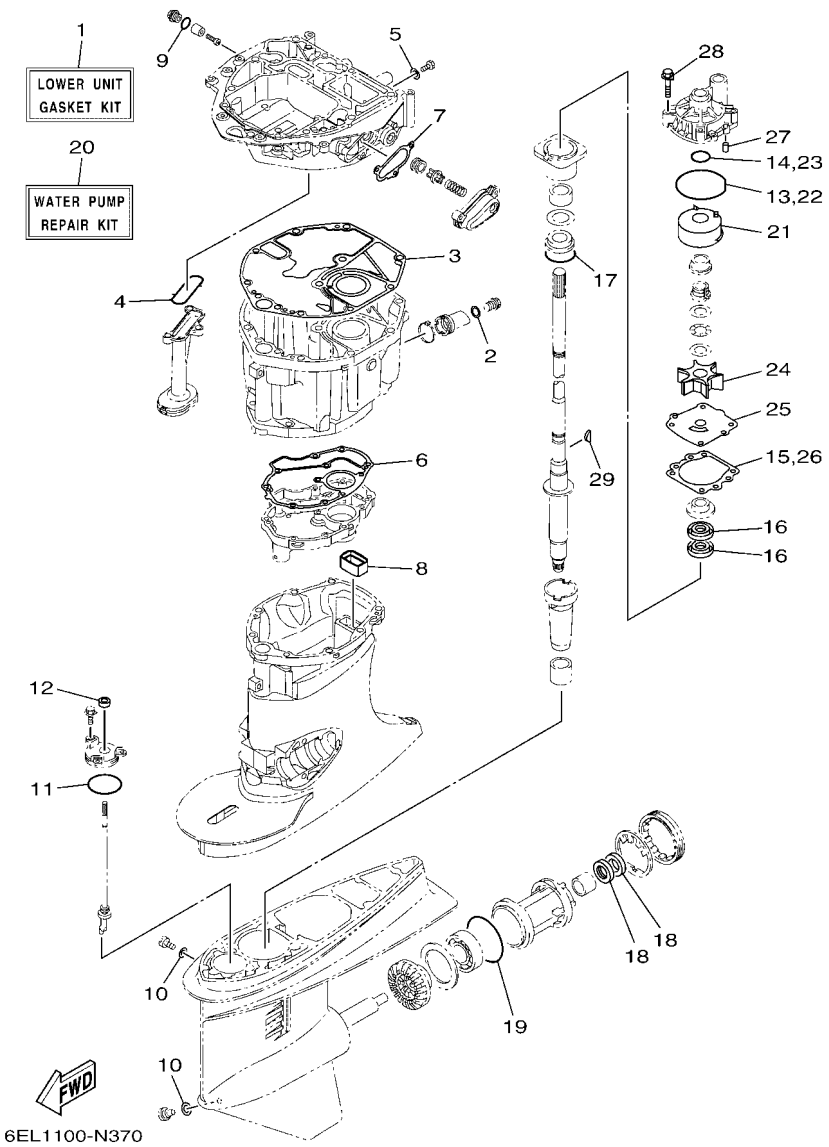

FIG. 43 REPAIR KIT 2 — KITS DE REPARATION 2

REF. NO.	PART NO. N° PIECES	DESCRIPTION DESCRIPTION	6EKC	6ELC				REMARKS REMARQUES
1	6EK–W0001–21	LOWER UNIT GASKET KIT POCHETTE DE JOINTS EMBASE	1	1				
2	90430–14M09	.GASKET .JOINT	1	1				
3	6EK–15312–01	.GASKET, OIL PAN .JOINT DE VENTILATEUR D'HUILE	1	1				
4	67F–13415–00	.SEAL, OIL STRAINER .JOINT, FILTRE A HUILE	1	1				
5	90430–08143	.GASKET .JOINT	1	1				
6	6EK–41134–00	.GASKET, EXHAUST MANIFOLD .JOINT, PIPE D'ECHAPPEMENT	1	1				
7	6EK–12435–A0	.GASKET .JOINT	1	1				
8	67F–45127–00	.SEAL .JOINT	1	1				
9	93210–13M63	.O-RING .JOINT TORIQUE	1	1				
10	90430–08003	.GASKET .JOINT	2	2				
11	93210–58144	.O-RING .JOINT TORIQUE	1	1				
12	93106–09014	.OIL SEAL .JOINT SPY	1	1				
13	93210–86M38	.O-RING .JOINT TORIQUE	1	1				
14	93210–37160	.O-RING .JOINT TORIQUE	1	1				
15	6E5–44315–A0	.GASKET, WATER PUMP .JOINT, POMPE A EAU	1	1				
16	93101–28M16	.OIL SEAL .JOINT SPY	2	2				
17	93210–55M14	.O-RING .JOINT TORIQUE	1	1				
18	93101–30M17	.OIL SEAL .JOINT SPY	2	2				
19	93210–86M39	.O-RING .JOINT TORIQUE	1	1				
20	68V–W0078–01	WATER PUMP REPAIR KIT KIT DE REPARATION DE LA POMPE	1	1				
21	61A–44322–02	.INSERT, CARTRIDGE .CUVETTE	1	1				
22	93210–86M38	.O-RING .JOINT TORIQUE	1	1				
23	93210–37160	.O-RING .JOINT TORIQUE	1	1				
24	6E5–44352–01	.IMPELLER .TURBINE	1	1				
25	6EK–44323–00	.OUTER PLATE, CARTRIDGE .PLAQUE EXTERIEURE	1	1				
26	6E5–44315–A0	.GASKET, WATER PUMP .JOINT, POMPE A EAU	1	1				
27	93606–12019	.PIN, DOWEL .GOUPILLE	2	2				

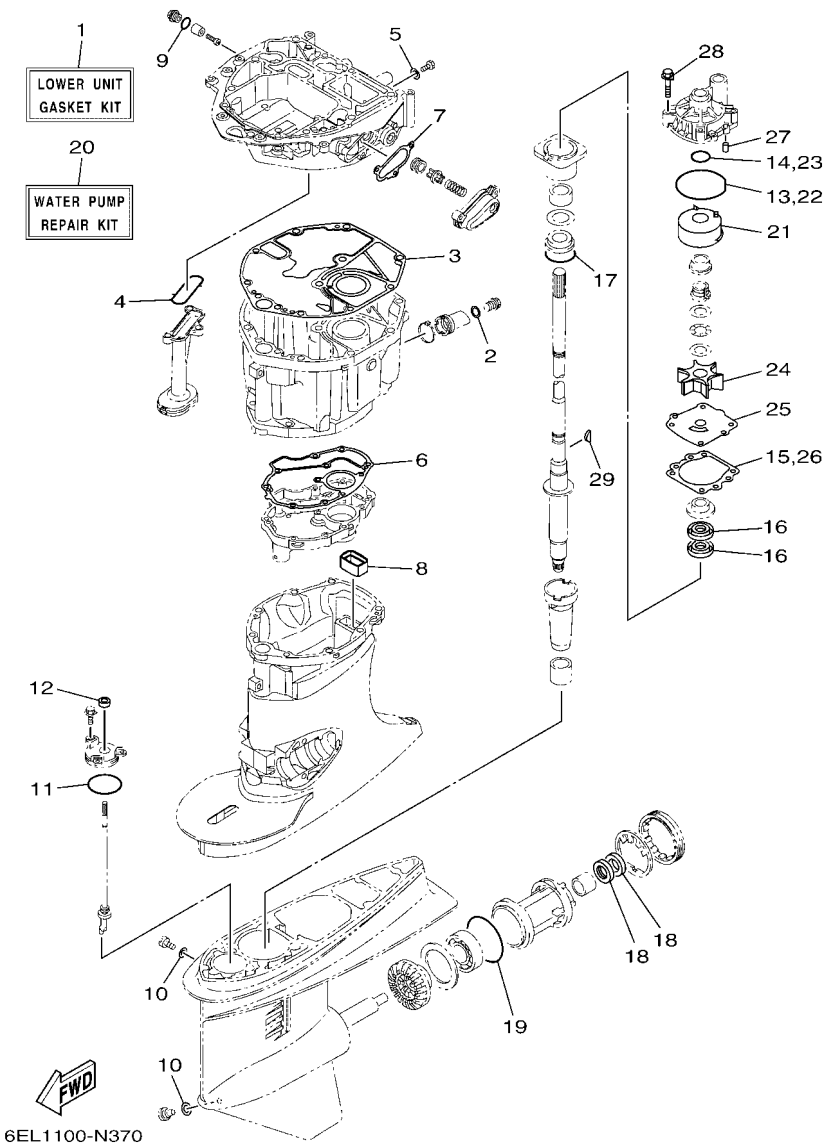

FIG. 43 REPAIR KIT 2 — KITS DE REPARATION 2

REF. NO.	PART NO. N° PIECES	DESCRIPTION DESCRIPTION	6EKC	6ELC				REMARKS REMARQUES
28	90119–08191	.BOLT, WITH WASHER .BOULON, AVEC RONDELLE	4	4				
29	90280–04M05	.KEY, WOODRUFF .CLAVETTE, DEMI-LUNE	1	1				

NUMERICAL INDEX
INDEX NUMERIQUE

PART NO. N° PIECES	REF. NO.
6EK–11110–00–9S	5 – 2
6EK–11119–00	5 – 32
6DA–11133–10	5 – 3
6EK–11168–00	5 – 26
6EK–11181–00	5 – 21
	42 – 3
6EK–11191–10	5 – 25
6EK–11192–01	5 – 30
6EK–11193–00	5 – 28
	42 – 4
6G8–11197–A0	3 – 15
	5 – 13
	12 – 9
	29 – 30
69J–11301–02	5 – 15
6EK–11313–00	3 – 4
6EK–11325–00	1 – 7
	12 – 8
6G8–11325–00	1 – 1
	1 – 4
	1 – 15
	3 – 13
	5 – 11
	29 – 28
6ML–11325–00	1 – 5
	5 – 16
63P–11325–01	1 – 2
	3 – 17
67F–11328–01	5 – 17
6EK–11351–01	3 – 25
	42 – 8
69J–11355–00	30 – 14
	42 – 13
6CJ–11372–00	7 – 25
6EK–11410–01	4 – 1
6EK–11416–00	4 – 5
6EK–11416–10	4 – 5
6EK–11416–20	4 – 5
6EK–11416–30	4 – 5
6EK–11416–40	4 – 5
6EK–11417–00	4 – 6
6EK–11417–10	4 – 6
6EK–11417–20	4 – 6
6EK–11417–30	4 – 6
6EK–11417–40	4 – 6
6EK–11426–01	4 – 7
6EK–11427–00	4 – 8
6CB–11478–00	4 – 2

PART NO. N° PIECES	REF. NO.
6EK–11537–00	6 – 12
6EK–11567–00	6 – 13
6EK–11590–03	6 – 17
6EK–11603–01	4 – 12
6EK–11604–01	4 – 12
6EK–11631–02–94	4 – 11
6EK–11633–00	4 – 13
6EK–11635–02	4 – 11
6EK–11656–00	4 – 15
6EK–11656–10	4 – 15
6EK–11656–20	4 – 15
6EK–11656–30	4 – 15
6EK–11656–40	4 – 15
6EK–12111–00	6 – 1
30X–12114–00	6 – 4
62Y–12116–00	6 – 3
30X–12117–00	6 – 5
30X–12118–00	6 – 6
51Y–12119–00	6 – 7
6EK–12121–00	6 – 2
6D8–12153–00	6 – 8
6D8–12153–10	6 – 8
6D8–12153–20	6 – 8
6D8–12153–30	6 – 8
6D8–12153–40	6 – 8
6D8–12153–50	6 – 8
6D8–12153–60	6 – 8
6D8–12153–70	6 – 8
6D8–12153–80	6 – 8
6D8–12153–90	6 – 8
6D8–12153–A0	6 – 8
6D8–12153–B0	6 – 8
6D8–12153–C0	6 – 8
6D8–12153–D0	6 – 8
6D8–12153–E0	6 – 8
6D8–12153–F0	6 – 8
6D8–12153–G0	6 – 8
6D8–12153–H0	6 – 8
6D8–12153–J0	6 – 8
6D8–12153–K0	6 – 8
6D8–12153–L0	6 – 8
6D8–12153–M0	6 – 8
6D8–12153–N0	6 – 8
6D8–12153–P0	6 – 8
6D8–12153–R0	6 – 8
6D8–12153–S0	6 – 8
6D8–12153–T0	6 – 8
6D8–12153–U0	6 – 8

PART NO. N° PIECES	REF. NO.
6D8–12153–V0	6 – 8
6EK–12171–00	6 – 9
6EK–12181–00	6 – 10
6EK–12411–00	1 – 6
	3 – 19
6EK–12412–00	3 – 20
6EK–12413–00	3 – 21
6G5–12416–00	29 – 19
6EK–12435–A0	29 – 23
	43 – 7
6EK–1243A–00	3 – 23
6EK–1246A–00–9S	29 – 22
6EK–12483–00	3 – 26
6AW–12572–00	23 – 5
6EK–12576–00	9 – 8
6EK–12577–00	9 – 9
6R3–12581–00	23 – 7
6R3–12582–00	23 – 8
6R3–12583–00	23 – 9
6CB–13016–00	1 – 9
	10 – 5
6AW–13119–00	30 – 12
63P–13131–00	13 – 19
6KA–13132–00	10 – 21
6EK–13152–02	7 – 9
6EK–13160–01	8 – 3
6EK–13161–00	8 – 4
6EK–13300–00	30 – 10
6EK–13329–00	30 – 11
67F–13411–00	30 – 7
67F–13415–00	30 – 9
	43 – 4
6EK–13437–62	15 – 21
5GH–13440–72	1 – 3
	3 – 30
6EK–13446–00	3 – 32
6CB–13473–00	3 – 29
6EK–13475–00	3 – 33
	42 – 15
6EK–13490–00	3 – 28
6EK–13532–00	9 – 1
6EK–13543–00	7 – 27
6AW–13545–10	9 – 11
6EK–13546–00	9 – 16
6EK–13547–00	9 – 19
6EK–13548–01	9 – 22
6AW–13577–10	8 – 7
6CB–13593–00	10 – 18

PART NO. N° PIECES	REF. NO.
69J–13631–00	30 – 13
6EK–13641–01	7 – 12
6EK–13645–00	7 – 13
	42 – 11
6EK–13646–00	7 – 14
	42 – 12
6C5–13713–02	7 – 22
63P–13716–00	10 – 17
6EK–13751–00	7 – 1
6EK–13761–01	8 – 5
6AW–13781–00	10 – 25
6AW–13784–00	10 – 28
6EK–13843–00	7 – 28
6EK–13881–01	7 – 29
68V–13897–00	7 – 24
6CB–13906–01	10 – 8
68V–13907–22	10 – 19
63P–13915–00	1 – 10
	10 – 20
6AW–1410B–00	8 – 6
6X4–14137–00	36 – 25
6DA–14146–00	10 – 10
6EK–14180–04	10 – 1
6EK–14181–00	10 – 11
6EK–14182–00	10 – 2
6P2–14191–00	10 – 12
6AW–14197–00	10 – 31
68V–14216–00	10 – 33
6CB–14216–00	10 – 6
6EK–14291–00	8 – 10
6P2–14386–00	10 – 27
6P2–1441J–01	7 – 19
6DA–14440–00	7 – 18
6LH–1447B–00	10 – 24
6CB–14546–00	10 – 23
6CB–14564–00	10 – 9
63P–14567–00	10 – 16
5PS–14568–00	9 – 2
6K8–14591–10	10 – 14
6EK–14615–10	12 – 1
6EK–14625–00	12 – 6
6EK–1475A–00	9 – 6
6EK–1475F–10	9 – 23
6EK–1475G–00	9 – 3
	9 – 25
6EK–1475H–00	10 – 34
6EK–1475J–00	10 – 35
6CB–14984–00	1 – 11

PART NO. N° PIECES	REF. NO.
6CB–14984–00	10 – 26
6CB–14985–00	10 – 22
6EK–14989–00	9 – 24
6EK–15109–02–9S	3 – 2
6EK–15311–02–CA	30 – 1
6EK–15312–01	30 – 6
	43 – 3
6EK–15316–00	30 – 18
6EK–15353–01	3 – 11
	42 – 6
6EK–15362–10	30 – 17
6G8–15363–00	5 – 34
6EK–15373–10	7 – 16
6EK–15393–00	7 – 17
6EK–15414–00–9S	3 – 10
6EK–2134X–10	8 – 15
63D–21744–00	9 – 21
6E5–21744–00	9 – 20
6EK–22434–00	27 – 23
6EK–22471–01	27 – 18
68V–24149–00	13 – 27
6EK–2416A–10	9 – 5
6P2–24170–00	8 – 13
6FP–2419E–01	8 – 14
6CB–24217–00	10 – 7
6C5–24251–01	11 – 3
6EK–24311–00	13 – 15
6EK–24314–00	13 – 3
6EK–24330–02	11 – 2
6E5–24351–51	13 – 4
6YK–24360–73	14 – 1
68V–24374–00	13 – 22
6AW–24377–01	13 – 2
688–24378–00	9 – 14
68V–24379–10	10 – 32
6EK–24410–00	13 – 16
68V–24411–00	13 – 21
68V–24412–00	13 – 17
6EK–24413–00	13 – 23
6EK–24414–00	13 – 25
63P–24423–00	13 – 20
68V–24444–00	13 – 26
6EK–24452–00	10 – 13
4SV–24453–00	10 – 29
68V–24454–00	13 – 18
6D8–24469–00	13 – 9
68V–24471–10	13 – 24
6EK–24478–00	10 – 3

PART NO. N° PIECES	REF. NO.
6EK–24481–00	10 – 4
6CB–24482–00	10 – 15
6EK–2450B–01	11 – 1
6D8–24519–00	13 – 10
6EK–24560–00	13 – 5
6D8–24562–00	13 – 8
6D8–24563–00	1 – 12
	13 – 6
6D8–24564–00	1 – 13
	13 – 7
6EK–24566–00	13 – 12
6EK–24568–00	13 – 13
6EK–26301–00	38 – 7
6X4–26367–01	36 – 33
	36 – 36
67F–28100–03	13 – 31
6CB–2812A–00	17 – 22
6EK–28199–7A–D0	13 – 32
6EK–28199–7A–E0	13 – 32
6EK–28199–7A–F0	13 – 32
6EK–28199–7A–G0	13 – 32
6EK–28199–7A–H0	13 – 32
6EK–28199–7A–S0	13 – 32
6EK–28199–8A–K0	13 – 33
6EK–28199–8A–L0	13 – 33
6EK–28199–8A–M0	13 – 33
6EK–28199–8A–N0	13 – 33
6EK–28199–8A–P0	13 – 33
6EK–28199–8A–R0	13 – 33
6EK–41114–01	12 – 14
	42 – 21
6EK–41124–01	12 – 15
	42 – 22
6EK–41134–00	29 – 9
	43 – 6
6EK–41137–02–CA	29 – 1
6EK–41213–00	24 – 34
6EK–41237–00	24 – 45
6EK–41237–10	24 – 38
6X4–41291–00	36 – 7
6EK–41635–00	24 – 39
6EK–41662–00	24 – 40
6X4–42111–02–8D	36 – 1
6X4–42115–00	36 – 21
6X4–42119–01	36 – 4
6EK–42121–00	35 – 24
	38 – 3
63D–42121–22–8D	36 – 47

NUMERICAL INDEX
INDEX NUMERIQUE

PART NO. N° PIECES	REF. NO.
63D–42126–00	36 – 16
6X4–42128–00	36 – 12
6X4–42131–11	36 – 44
6X4–42137–00	36 – 6
6EK–42154–00	24 – 30
6EK–42157–00	24 – 42
6X4–42159–00	36 – 38
68V–42171–00	24 – 31
6X4–42177–01	36 – 5
6BG–42384–00	23 – 3
67G–42508–12	39 – 1
6EK–42510–00–8D	26 – 6
6EK–42510–10–8D	26 – 6
6X4–42526–00	39 – 11
63D–42527–00	39 – 6
63D–42528–00	39 – 16
67G–42541–00	39 – 4
6EK–42541–00	23 – 10
67G–42541–10	39 – 7
6EM–42542–00	12 – 18
67G–42546–00	39 – 5
67G–42561–00	39 – 14
67G–42562–00	39 – 15
6EK–42610–02	2 – 1
6EK–42615–01	2 – 14
6EK–42617–00	15 – 12
6EK–4261A–02	2 – 2
6EK–42646–00	2 – 4
6EK–42647–00	2 – 5
6EK–42662–01	2 – 13
68F–42663–01	2 – 12
6EK–42675–00	2 – 18
6EK–42676–00	2 – 20
68V–42677–30	2 – 16
68V–42678–41	2 – 17
6D6–42681–00	2 – 19
6DA–42697–00	2 – 15
6EK–42710–01	22 – 1
648–42715–00	24 – 26
6EK–42716–01	22 – 27
67F–42717–00	22 – 23
6X4–42725–01	36 – 46
6EK–42725–10	22 – 17
6AH–42726–01	23 – 11
6H1–42726–31	23 – 1
6EK–42727–01	29 – 6
6X4–42727–01	37 – 17
6EK–42728–01	22 – 16

PART NO. N° PIECES	REF. NO.
6X4–42728–10	36 – 56
6EK–42741–00–8D	23 – 18
6H4–42748–01	22 – 22
68F–42753–00	22 – 19
6CB–42761–00	22 – 20
6EK–42769–01	29 – 17
6EE–42794–41	22 – 28
6EE–42794–51	22 – 29
6EK–42815–01–8D	22 – 5
6EK–42816–01–8D	22 – 6
6CB–42818–00	22 – 11
6X4–42821–00	36 – 29
6EK–43111–00–8D	25 – 1
6EK–43112–00–8D	25 – 2
6EK–43126–00	25 – 27
64E–43131–30	25 – 9
64E–43139–11	26 – 3
66T–43144–00	22 – 14
	25 – 21
6E5–43145–01	35 – 7
6G5–43148–00	25 – 18
6EK–43181–00	25 – 15
6EK–43185–00	25 – 16
6EK–43311–00–8D	25 – 5
6EK–43311–10–8D	25 – 5
682–43318–01	39 – 8
6EK–43800–04	27 – 1
6EK–43804–11	28 – 3
6LH–43805–00	28 – 2
6EK–4380F–00	28 – 6
6C5–4380G–00	27 – 33
6EK–4380K–04	27 – 29
6EK–4380P–00	27 – 10
6EK–4380R–00	27 – 7
6EK–43810–00	27 – 2
6EK–43811–00	27 – 9
6H1–43812–00	27 – 3
6C5–43816–00	27 – 32
6C6–43817–00	27 – 30
6EK–43818–00	25 – 31
6EK–4381B–00	27 – 20
6EK–43821–00	27 – 4
6EK–43829–00	27 – 26
6EK–4382E–00	27 – 39
6D8–4382L–00	27 – 62
6EK–43830–00	27 – 35
6EK–43831–00	27 – 63
6H1–43834–10	25 – 32

PART NO. N° PIECES	REF. NO.
6D8–43841–00	27 – 55
6D8–43843–00	27 – 50
6D8–43844–00	27 – 48
6H1–43844–10	27 – 59
6EK–43845–00	27 – 66
69A–4384F–00	27 – 56
6H1–4384G–11	27 – 58
62X–4384H–00	27 – 22
	27 – 28
6D8–4384M–00	27 – 37
6D8–43851–00	27 – 45
6C6–43853–00	27 – 41
6C5–43854–00	27 – 52
6C5–43855–10	27 – 46
6EK–43856–00	27 – 49
6D8–43861–00	27 – 6
	27 – 8
6EK–43861–00	27 – 5
6H1–43862–00	27 – 11
	27 – 15
6EK–43862–01	28 – 13
6D8–43863–00	27 – 64
67F–43865–00	27 – 14
62X–4386K–00	28 – 7
6EK–43875–00	27 – 19
6H1–43875–00	27 – 65
63P–43879–10	28 – 8
6C6–4387G–00	27 – 42
6LH–4387G–00	28 – 12
6EK–43880–14	27 – 68
	28 – 1
6EK–43881–14	28 – 10
6LH–43882–00	28 – 11
6H1–43883–00	27 – 38
6EK–43892–00	28 – 4
6C5–43895–00	27 – 51
6EK–43899–00	27 – 21
69J–4389J–00	27 – 31
	27 – 36
6X4–44100–01	36 – 20
6X4–44102–00	36 – 22
6X4–44114–00	37 – 15
6EK–44117–01	24 – 8
6EK–44118–00	24 – 22
6EK–44120–01	24 – 17
6EK–44120–11	24 – 17
6EK–44121–00	24 – 15
63P–44122–00	24 – 12

PART NO. N° PIECES	REF. NO.
6X4–44132–00	36 – 24
6EK–44135–00	24 – 35
6X4–44139–01	36 – 8
6L6–44150–02	33 – 19
6E5–44150–03	31 – 17
6X4–44159–A0–8D	36 – 39
6X4–44173–00	36 – 40
6X4–44177–00	36 – 11
6X4–44188–00	36 – 14
6X3–44191–00	36 – 42
61A–44311–01	31 – 23
	33 – 25
6E5–44312–00	32 – 18
	34 – 18
6E5–44315–A0	31 – 30
	33 – 32
	43 – 15
	43 – 26
61A–44322–02	31 – 24
	33 – 26
	43 – 21
6EK–44323–00	31 – 29
	33 – 31
	43 – 25
6E5–44352–01	31 – 27
	33 – 29
	43 – 24
6E5–44365–01	32 – 17
	34 – 17
6EK–44365–01	32 – 3
	34 – 3
6E5–44366–01	32 – 1
	34 – 1
6EK–44379–00	32 – 4
	34 – 4
6P2–44391–00	23 – 4
	23 – 13
6EK–44514–00	26 – 23
6EK–44526–00	26 – 26
6EK–44536–00	25 – 38
6EK–44551–00–8D	26 – 12
6EK–44553–00–8D	26 – 21
63P–44555–00	26 – 15
61A–44575–01	26 – 14
6EK–45111–00–8D	29 – 11
6EK–45111–10–8D	29 – 11
67F–45127–00	29 – 25
	43 – 8

PART NO. N° PIECES	REF. NO.
6EK–45135–00	29 – 26
6C5–45155–02	29 – 18
6EK–45181–01	29 – 10
688–45214–02	32 – 10
	34 – 10
688–45215–02	32 – 11
	34 – 11
6H1–45251–03	1 – 14
	25 – 36
6EK–45300–03–8D	31 – 1
6EK–45300–13–8D	31 – 1
6EL–45300–14–8D	33 – 1
6E5–45301–07–8D	31 – 2
	33 – 2
6EK–45318–00	29 – 27
6E5–45321–00	31 – 13
	33 – 15
6E5–45331–00–9S	31 – 33
	33 – 35
6E5–45332–00–CA	31 – 55
6L6–45332–00–CA	33 – 58
688–45341–10	31 – 7
	33 – 9
6E5–45344–00	31 – 39
	33 – 41
6L6–45371–00	1 – 18
	34 – 14
6E5–45371–01	1 – 18
	32 – 14
688–45375–00	32 – 9
	34 – 9
663–45376–00	32 – 8
	34 – 8
6E5–45378–00	31 – 10
	33 – 12
688–45383–02	31 – 65
	33 – 69
688–45384–02	31 – 66
	33 – 70
6EK–45501–00	31 – 41
6EK–45501–10	31 – 41
	33 – 43
61A–45527–00	31 – 22
	33 – 24
6E5–45536–00	31 – 9
	33 – 11
61A–45538–00	31 – 19
	33 – 21

PART NO. N° PIECES	REF. NO.
6L6–45538–00	33 – 6
68V–45551–00	31 – 42
	33 – 44
68V–45560–00	31 – 44
68W–45560–00	33 – 46
6E5–45567–01	31 – 5
	33 – 7
6E5–45567–10	31 – 5
	33 – 7
6E5–45567–20	31 – 5
	33 – 7
6E5–45567–30	31 – 5
	33 – 7
6E5–45567–40	31 – 5
	33 – 7
6E5–45567–50	31 – 5
	33 – 7
6E5–45567–60	31 – 5
	33 – 7
68W–45570–11	33 – 60
68V–45571–00	31 – 57
6E5–45576–00	31 – 58
6L6–45576–00	33 – 61
6L6–45577–00	31 – 62
	33 – 67
6L6–45577–10	31 – 62
	33 – 67
6L6–45577–20	31 – 62
	33 – 67
6L6–45577–30	31 – 62
	33 – 67
6L6–45577–40	31 – 62
	33 – 67
6L6–45577–50	31 – 62
	33 – 67
6L6–45577–60	31 – 62
	33 – 67
6K1–45578–01	33 – 63
6K1–45578–10	33 – 63
6K1–45578–20	33 – 63
6K1–45578–30	33 – 63
6K1–45578–40	33 – 63
6K1–45578–50	33 – 63
6K1–45578–60	33 – 63
6E5–45587–01	31 – 36
	33 – 38
6E5–45587–10	31 – 36
	33 – 38

PART NO. N° PIECES	REF. NO.
6E5–45587–20	31 – 36
	33 – 38
6E5–45587–30	31 – 36
	33 – 38
6E5–45587–40	31 – 36
	33 – 38
6E5–45587–50	31 – 36
	33 – 38
6E5–45587–60	31 – 36
	33 – 38
68W–45611–01	33 – 49
6E5–45611–01	31 – 46
68V–45631–02	31 – 53
	33 – 56
6E5–45633–01	31 – 54
	33 – 57
6E5–45634–02	31 – 47
	33 – 50
6N7–45930–00	32 – 25
6L6–45930–01	34 – 24
688–45930–02	32 – 24
6N7–45932–00	32 – 25
688–45932–60	32 – 24
68V–45941–00	32 – 24
6E5–45941–00	32 – 24
6EK–45941–00	32 – 25
6FP–45941–00	32 – 25
68V–45943–00	32 – 24
6E5–45943–00	32 – 24
6EK–45943–00	32 – 25
6FP–45943–00	32 – 25
6EK–45945–00	32 – 25
6FP–45945–00	32 – 25
6E5–45945–01	32 – 24
6E5–45947–00	32 – 24
6EK–45947–00	32 – 25
6FP–45947–00	32 – 25
6E5–45949–00	32 – 24
6EK–45949–00	32 – 25
6FP–45949–00	32 – 25
6E5–45952–00	32 – 24
6E5–45954–00	32 – 24
6E5–45956–00	32 – 24
6E5–45958–00	32 – 24
6H1–45970–00	32 – 25
6L6–45970–00	34 – 24
6N4–45970–00	34 – 25
6N7–45970–00	32 – 25

PART NO. N° PIECES	REF. NO.
688–45970–03	32 – 24
62A–45970–10	32 – 24
6H1–45972–00	32 – 25
6L6–45972–00	34 – 24
6N4–45972–00	34 – 25
6N7–45972–00	32 – 25
688–45972–02	32 – 24
62A–45972–10	32 – 24
6H1–45974–00	32 – 25
6N4–45974–00	34 – 25
6N7–45974–00	32 – 25
688–45974–02	32 – 24
62A–45974–10	32 – 24
62A–45976–00	32 – 24
6H1–45976–00	32 – 25
6N7–45976–00	32 – 25
688–45976–01	32 – 24
6H1–45978–00	32 – 25
6N4–45978–00	34 – 25
6N7–45978–00	32 – 25
688–45978–60	32 – 24
6EK–45982–00	32 – 26
	32 – 29
	34 – 26
6E5–45987–01	32 – 19
	34 – 19
688–45997–01	32 – 20
	34 – 20
6N6–45B70–00	32 – 28
6N6–45B72–00	32 – 28
6N6–45B74–00	32 – 28
6N6–45B76–00	32 – 28
6N6–45B78–00	32 – 28
6N6–45B80–00	32 – 28
6EK–45C82–09	32 – 27
	32 – 30
	34 – 27
6X4–47731–01	36 – 23
703–48129–00	36 – 28
6X4–48154–00	36 – 17
6X4–48215–00	36 – 3
6X4–48261–00	36 – 26
6Y8–48277–00	40 – 16
6EK–48321–00	38 – 4
6E5–48344–00	24 – 6
	24 – 28
688–48511–02	35 – 21
6EK–48531–01	24 – 1

PART NO. N° PIECES	REF. NO.
6EK–48532–00	24 – 2
63D–48538–00	38 – 6
6EK–48538–00	24 – 4
6X4–48538–00	36 – 32
6X4–48538–10	36 – 35
6E5–61303–01	35 – 14
6E5–61310–00	35 – 10
6E5–61311–11	35 – 12
6E5–61313–00	35 – 11
6E5–61315–00	35 – 13
6EK–61350–00	35 – 1
6E5–61355–00	35 – 2
6C5–81145–00	7 – 2
6H5–81315–00	40 – 17
6EK–8132G–00	15 – 17
6EK–81337–01	15 – 11
6EK–81410–00	15 – 3
6EM–81800–02	21 – 1
69J–81801–11	21 – 5
6CB–81807–00	21 – 8
6CB–81809–00	21 – 14
67F–81810–00	21 – 3
67F–81813–00	21 – 6
6CB–81820–00	21 – 7
67F–81821–00	21 – 11
6EK–81822–01	18 – 4
6EK–81823–00	18 – 6
6CB–81826–00	21 – 22
69J–81828–00	21 – 23
6C5–8182L–00	7 – 3
67F–81830–00	21 – 16
6CB–81832–00	21 – 9
6CB–81836–00	21 – 10
6C5–81839–00	21 – 19
67F–8183R–00	21 – 13
60V–8183T–00	21 – 17
69J–81840–11	21 – 4
67F–81841–00	21 – 12
6CB–81842–00	21 – 18
67F–81846–00	21 – 24
67F–81850–00	21 – 2
6X4–81860–00	38 – 11
6C5–81869–00	21 – 21
67F–81891–00	21 – 15
6EK–81919–11	17 – 25
60V–81925–00	18 – 2
6EM–81941–01	21 – 20
6X4–81942–01	37 – 20

PART NO. N° PIECES	REF. NO.
6EK–81942–10	17 – 10
6EK–81948–01	16 – 4
6EK–81952–10	17 – 5
6EK–81960–10	19 – 12
6EK–81975–01	19 – 13
6EK–81980–01	20 – 3
6EE–81994–41	15 – 22
6EE–81994–51	15 – 23
6AH–81996–01	22 – 30
68V–82105–02	18 – 9
6P2–82113–00	17 – 23
682–82119–01	17 – 2
6D8–82148–00	25 – 24
6E5–82148–00	25 – 3
66K–82149–00	25 – 8
68V–82149–30	25 – 8
6FP–82151–01	17 – 18
6CB–82151–20	17 – 19
6CB–82151–30	17 – 20
6FP–82170–02	17 – 17
6EK–82181–00	28 – 5
6EK–82310–00	19 – 1
6EK–82310–10	19 – 2
6A0–82317–01	15 – 14
67F–82361–00	19 – 8
67F–82362–00	19 – 10
6EK–82370–00	19 – 3
6EK–82388–00	19 – 5
6EK–82398–00	12 – 20
68V–82504–00	20 – 13
6Y8–82509–10	40 – 8
6X4–82510–42	37 – 1
6Y8–82521–11	40 – 15
703–82532–00	37 – 3
6EK–8253C–00	16 – 2
6X4–82540–00	36 – 27
6DA–82553–00	20 – 19
6EK–82553–11	20 – 22
682–82556–00	37 – 6
69J–82563–01	20 – 14
6X4–82563–01	37 – 8
69W–82575–00	37 – 5
676–82577–01	37 – 2
6C5–8257V–00	16 – 8
689–8257Y–00	37 – 7
68F–82582–00	18 – 3
6Y8–82582–11	20 – 2
6X4–82586–11	38 – 9

PART NO. N° PIECES	REF. NO.
69J–82587–01	20 – 15
6E5–82588–00	22 – 24
61A–82588–01	24 – 9
6EK–82590–12	20 – 1
68V–82594–00	22 – 26
60V–8259F–01	24 – 27
63P–825E0–02	41 – 1
6X4–83383–00	37 – 10
	40 – 5
6X4–83386–00	37 – 11
	40 – 6
6E5–83558–00	23 – 16
6E5–83558–10	31 – 12
	33 – 14
6FM–83589–00	37 – 18
69J–83614–00	20 – 16
6EK–83626–02	15 – 20
6X4–83653–20	37 – 13
67H–83672–02	26 – 1
68F–83688–10	7 – 7
6C5–84301–10	37 – 14
6Y8–8454G–00	40 – 11
68F–85119–00	16 – 7
	17 – 8
6X4–85415–00	37 – 19
6FP–85544–00	17 – 21
689–85547–01	13 – 1
6EK–85548–00	16 – 10
6EK–85561–00	15 – 5
60V–85564–00	16 – 5
	17 – 6
6CB–85580–01	15 – 4
6CJ–85780–02	20 – 18
6CJ–85790–00	20 – 11
6C5–85885–00	7 – 4
6EK–8591A–22	16 – 1
6C5–86120–00	8 – 1
6Y8–86260–03	40 – 2
6AA–86261–01	40 – 3
6Y8–86267–00	40 – 1
K1C–A3275–00	4 – 10
7BB–G3861–00	27 – 17
6EK–W0001–02	42 – 1
6EK–W0001–21	43 – 1
68V–W0078–01	1 – 19
	43 – 20
6EK–W009A–02–9S	5 – 1
6EK–W009B–14–9S	3 – 1

PART NO. N° PIECES	REF. NO.
6EK–W1165–00	4 – 9
6EK–W4624–00	6 – 16
6EK–W8145–02	15 – 1
63P–W8195–00	17 – 1
6EK–W9010–00	15 – 2
90101–09M70	35 – 18
90101–12014	36 – 48
90101–12065	25 – 41
	25 – 41
90101–12066	25 – 41
90105–06037	3 – 12
	5 – 24
90105–06039	2 – 6
90105–06151	3 – 34
	30 – 15
90105–06208	13 – 30
90105–06M07	5 – 18
90105–06M08	8 – 8
90105–06M14	18 – 10
90105–08170	3 – 8
90105–08186	7 – 6
90105–08220	12 – 17
90105–08247	12 – 16
90105–08248	18 – 8
90105–08M87	8 – 12
90105–10M00	32 – 15
	34 – 15
90105–14007	26 – 25
90105–14013	26 – 18
90109–06286	3 – 22
90109–06288	24 – 33
	24 – 36
90109–06292	30 – 8
90109–06316	22 – 21
90109–06M81	22 – 25
	24 – 3
90109–06M86	20 – 17
	22 – 15
90109–08240	18 – 5
90111–05037	7 – 8
90111–08078	2 – 7
90116–10063	35 – 22
	38 – 1
90119–06275	19 – 11
90119–06276	25 – 37
90119–06286	31 – 16
	33 – 18
90119–06299	8 – 9

PART NO. N° PIECES	REF. NO.
90119–06309	8 – 18
90119–07234	5 – 8
90119–07235	5 – 6
90119–08022	7 – 11
90119–08187	22 – 2
90119–08191	31 – 32
	33 – 34
	43 – 28
90119–08193	39 – 2
90119–10007	29 – 13
90119–10050	6 – 14
90119–10054	25 – 35
90119–10057	3 – 7
90119–10058	26 – 22
90119–10071	32 – 7
	34 – 7
90149–10072	5 – 23
90151–06M02	3 – 18
90152–05007	36 – 9
90152–05M07	32 – 12
	34 – 12
90159–05059	26 – 4
	41 – 3
90159–06053	23 – 22
90159–06M28	23 – 20
90167–06M00	40 – 12
90169–05M00	17 – 11
90170–09M03	35 – 3
90170–09M05	35 – 19
90170–14M06	35 – 15
90170–16M01	31 – 43
	33 – 45
90171–18M04	32 – 22
	34 – 22
90176–14002	26 – 19
	26 – 28
90179–08003	18 – 1
90183–061A8	23 – 21
90185–05002	32 – 13
	34 – 13
90185–08057	39 – 13
90185–09M01	35 – 5
	35 – 20
90185–10027	35 – 23
	38 – 2
90185–10M14	39 – 9
90185–12M12	36 – 55
90185–22M11	25 – 12

PART NO. N° PIECES	REF. NO.
90201–06M05	24 – 32
	24 – 37
90201–06M30	40 – 13
90201–08M01	39 – 3
90201–10060	25 – 34
90201–10081	35 – 9
90201–10M20	35 – 6
90201–10M76	35 – 17
	39 – 10
90201–11008	24 – 20
90201–12035	36 – 52
90201–12426	25 – 43
90201–13M01	25 – 42
90201–156J2	22 – 8
90201–16M55	26 – 17
90201–186F1	5 – 5
	12 – 3
	42 – 17
90201–22M01	31 – 20
	33 – 22
90201–26M00	33 – 48
90201–26M59	25 – 11
90201–30M92	31 – 63
90201–38M60	26 – 8
90202–08M20	24 – 13
90202–32M19	26 – 16
90202–40M47	26 – 11
90206–12M22	36 – 50
90206–15M18	22 – 9
90206–22M19	31 – 21
	33 – 23
90249–06M19	25 – 20
90250–08M07	31 – 52
	33 – 55
90280–04M05	31 – 28
	33 – 30
	43 – 29
90282–04010	31 – 64
	33 – 68
90338–08174	26 – 7
90340–08002	31 – 6
	33 – 8
90340–14M06	5 – 9
	30 – 3
90340–18M09	5 – 4
	12 – 2
90383–20001	25 – 33
90386–06M12	24 – 16

PART NO. N° PIECES	REF. NO.
90386–08032	36 – 15
90386–10001	24 – 19
	24 – 43
90386–10M16	25 – 17
90386–12003	36 – 53
90386–15M73	22 – 7
90386–18001	25 – 29
90386–18M35	25 – 28
90386–25M31	25 – 10
90386–26MA3	36 – 43
90386–38M32	26 – 10
90387–05004	41 – 4
90387–06119	15 – 13
90387–06176	16 – 6
	17 – 7
90387–06289	8 – 17
90387–06M43	23 – 24
90387–07046	2 – 3
90387–08M37	22 – 4
90387–08M45	2 – 10
90387–10094	2 – 8
90387–10M42	35 – 4
90387–12M02	36 – 51
90401–20007	3 – 31
90430–06M03	5 – 19
90430–08003	1 – 17
	31 – 8
	33 – 10
	43 – 10
90430–08143	12 – 5
	29 – 3
	43 – 5
90430–14115	5 – 10
	20 – 12
	42 – 24
90430–14M09	1 – 16
	30 – 4
	43 – 2
90440–16001	32 – 2
90440–16002	32 – 2
	34 – 2
90445–073F9	23 – 14
90445–07ME8	31 – 11
90445–07ME9	31 – 11
	33 – 13
90464–06001	19 – 6
90464–07209	8 – 19
90464–07259	23 – 15

PART NO. N° PIECES	REF. NO.
90464–07M41	19 – 9
90464–08004	17 – 15
90464–08M07	37 – 4
90464–09129	12 – 22
90464–09M42	38 – 8
90464–10M32	17 – 14
90464–10M57	9 – 13
90464–11012	9 – 7
90464–12006	9 – 4
90464–12009	11 – 6
90464–12010	9 – 26
90464–12012	11 – 8
90464–12183	12 – 23
	17 – 16
90464–12224	11 – 7
90464–13227	19 – 7
90464–13249	15 – 10
90464–16001	9 – 18
	20 – 8
	20 – 20
	20 – 23
90464–18004	20 – 5
	20 – 6
	20 – 24
90464–20258	22 – 18
90464–21002	7 – 32
90464–22005	20 – 7
90464–99004	7 – 20
90465–08M63	25 – 7
90465–11M10	3 – 27
	9 – 10
	9 – 12
	9 – 15
	9 – 17
	11 – 4
	12 – 19
	13 – 11
	13 – 29
	23 – 2
	23 – 12
	23 – 17
	25 – 14
	26 – 5
	32 – 16
	34 – 16
	40 – 10
	41 – 5
90465–11M52	17 – 13

PART NO. N° PIECES	REF. NO.
90465–11M59	3 – 24
	30 – 19
90465–12M56	17 – 26
90465–13M18	20 – 21
	25 – 26
90465–13M24	38 – 10
90465–13M76	17 – 12
90465–13M97	15 – 7
90467–120A7	11 – 5
90468–10005	38 – 5
90468–18008	24 – 7
	24 – 14
	24 – 29
90468–180A0	24 – 21
90480–06M19	7 – 31
	15 – 19
90480–10M23	8 – 16
90480–12314	5 – 31
	15 – 16
90480–13M24	23 – 23
90480–20M05	29 – 21
90480–22M15	22 – 3
90501–12082	24 – 25
90501–16M37	31 – 48
	33 – 51
90501–200A2	29 – 20
90501–23215	36 – 13
90506–14M24	25 – 23
90506–22001	22 – 13
91312–06035	15 – 9
91318–03005	27 – 61
91318–03025	27 – 60
91318–05030	27 – 53
91318–05045	27 – 34
91380–06025	27 – 67
91490–20010	36 – 10
	36 – 19
91490–40030	32 – 23
	34 – 23
91609–16012	27 – 12
91690–30010	24 – 5
91690–30018	24 – 44
91690–30020	25 – 19
91690–50014	7 – 15
	12 – 13
91809–08006	5 – 7
92903–08100	18 – 12
92990–08600	2 – 9

PART NO. N° PIECES	REF. NO.
92990–12200	36 – 49
92990–12600	36 – 54
92990–18200	32 – 21
	34 – 21
92995–14600	26 – 20
	26 – 27
93101–28M16	31 – 34
	33 – 36
	43 – 16
93101–30M17	31 – 60
	33 – 65
	43 – 18
93102–38008	6 – 15
	42 – 10
93102–85008	4 – 4
	42 – 9
93106–09014	31 – 15
	33 – 17
	43 – 12
93210–04279	40 – 9
93210–04N51	27 – 43
93210–064A5	27 – 44
93210–09165	24 – 18
	27 – 25
93210–13M63	3 – 16
	5 – 14
	12 – 10
	22 – 10
	29 – 31
	42 – 2
	42 – 7
	42 – 18
	43 – 9
93210–16275	35 – 8
93210–19MJ1	3 – 9
	30 – 16
	42 – 5
	42 – 14
93210–207A0	3 – 5
93210–24M79	5 – 35
	42 – 16
93210–30682	13 – 28
	42 – 23
93210–33003	7 – 26
93210–37160	31 – 26
	33 – 28
	43 – 14
	43 – 23

NUMERICAL INDEX
INDEX NUMERIQUE

PART NO. N° PIECES	REF. NO.
93210–37MH7	26 – 9
93210–55M14	31 – 38
	33 – 40
	43 – 17
93210–58144	31 – 14
	33 – 16
	43 – 11
93210–64001	12 – 11
	42 – 19
93210–68N50	27 – 27
93210–84001	12 – 12
	42 – 20
93210–86M38	31 – 25
	33 – 27
	43 – 13
	43 – 22
93210–86M39	31 – 61
	33 – 66
	43 – 19
93306–208U0	31 – 56
93315–345W0	33 – 4
93315–425U7	31 – 45
	33 – 47
93315–43061	33 – 64
93315–430U8	31 – 59
93315–628U9	31 – 3
	33 – 3
93317–330U2	31 – 35
	33 – 37
93332–000U7	31 – 4
93332–000V7	33 – 59
93341–360U8	33 – 5
93341–440U5	33 – 62
93341–930V2	31 – 37
	33 – 39
93410–18M05	25 – 30
93410–36102	26 – 13
93450–19052	4 – 14
93501–04M02	24 – 24
93501–08001	27 – 47
93503–16003	27 – 16
	31 – 51
	33 – 54
93505–32038	27 – 13
	27 – 40
93507–32009	31 – 49
	33 – 52
93511–32017	31 – 50

PART NO. N° PIECES	REF. NO.
93511–32017	33 – 53
93604–26256	27 – 54
93605–10108	6 – 11
93606–12019	3 – 6
	4 – 3
	29 – 8
	29 – 16
	30 – 5
	31 – 31
	33 – 33
	43 – 27
93606–19M23	3 – 3
93608–12M05	29 – 5
	32 – 5
	34 – 5
93700–06002	25 – 6
	36 – 2
94702–00437	1 – 8
	5 – 36
95333–08600	18 – 11
95380–06600	8 – 2
	23 – 19
	36 – 18
95380–12600	25 – 44
95380–14700	35 – 16
95780–06300	40 – 14
95780–08300	2 – 11
95812–08030	18 – 7
95D75–06025	7 – 10
	7 – 21
95D75–06040	24 – 11
95D75–08040	5 – 20
95D75–08060	7 – 5
95D75–10060	26 – 24
95D95–06010	16 – 3
	25 – 40
95D95–06012	12 – 21
95D95–06016	7 – 30
	13 – 14
	15 – 18
	17 – 9
95D95–06025	29 – 24
95D95–06030	5 – 29
	15 – 8
	15 – 15
	24 – 23
	24 – 41
	29 – 7

PART NO. N° PIECES	REF. NO.
95D95–08012	22 – 12
95D95–08020	5 – 33
97595–05516	15 – 6
97602–04316	28 – 9
97607–04208	5 – 27
97780–50620	17 – 24
97780–60520	23 – 6
97780–60620	16 – 9
	16 – 11
	37 – 16
	40 – 7
97780–60920	36 – 41
97880–06035	40 – 12
97885–06008	25 – 4
97980–05214	7 – 23
97980–06216	37 – 9
	40 – 4
97985–04116	24 – 10
97985–04308	20 – 4
97985–06216	26 – 2
	36 – 45
97D95–06014	36 – 34
	36 – 37
	37 – 12
97D95–08014	12 – 4
	29 – 2
97E75–08535	29 – 12
97E75–10545	29 – 4
	29 – 14
	29 – 15
	30 – 2
97E95–06510	25 – 25
97E95–06512	25 – 22
97E95–06516	20 – 9
	20 – 10
	41 – 2
97E95–06520	17 – 4
97E95–06525	19 – 4
97E95–06530	19 – 14
	36 – 31
97E95–06610	17 – 3
97E95–06616	25 – 39
97E95–08520	25 – 13
97E95–08525	31 – 40
	33 – 42
	39 – 12
97E95–08540	36 – 30
97E95–10545	32 – 6

PART NO. N° PIECES	REF. NO.
97E95–10545	34 – 6
98507–04008	10 – 30
98780–05025	12 – 7
98980–05025	3 – 14
	5 – 12
	29 – 29
99001–08600	31 – 18
	33 – 20
99002–03600	27 – 57
99009–47500	27 – 24
99530–14016	5 – 22
99590–10114	8 – 11