YAMAHA

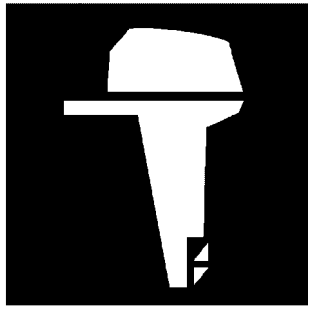

PARTS CATALOGUE
CATALOGUE DE PIECES DETACHEES

F6DMH'25 (6MC5)
F6DM'25 (6MC5)

YAMAHA
GENUINE
Parts & Accessories

1Z6MC-300FA

( )

F6DMH/F6DM
PARTS CATALOGUE
©2025 by Yamaha Motor Co., Ltd.
1st edition, May 2025
All rights reserved.
Any reprinting or unauthorized use
without the written permission of
Yamaha Motor Co., Ltd.
is expressly prohibited.
Printed in Japan.

F6DMH/F6DM
CATALOGUE DE PIECES DETACHEES
©2025 par Yamaha Motor Co., Ltd.
1re édition, mai 2025
Tous droits réservés
Toute réimpression ou utilisation
non autorisée sans la permission écrite
de Yamaha Motor Co., Ltd.
est formellement interdite.
Imprimé au Japon

FOREWORD

This Parts Catalogue is related to the parts for the model(s) on the cover page. When you are ordering replacement parts, please refer to this Parts Catalogue and quote both part numbers and part names correctly.

1. Modifications or additions which have been made after the issue of the Parts Catalogue will be announced in the Parts News.
   It is advisable that you make the necessary corrections to the Parts Catalogue according to the Parts News.

2. Abbreviations
   The following abbreviations are used in this Parts Catalogue.
   "UR" Use specified parts number.
   "UN" Use as many as needed.
   "AP" Alternate Parts
   "LM" Locally Made (Parts need to be ordered locally)
   "F#" Frame No. (Applicable machine No.)
   "O/S" Over Size

3. The number of components for assembly
   - Parts, which are to be supplied in an assembly, are listed with a dot (.) in front of the part name as shown below.
   - The numeral appearing to the right of each component part indicates the quantity of parts for each assembly unit.

PART NO.	DESCRIPTION	Q'TY	REMARKS
2F5–83310–60	FRONT FLASHER LIGHT ASSY	2	
115–83311–60	.BULB (6V–18W)	1	

4. Applicable colours of graphics are represented in the "REMARKS" as shown below.

PART NO.	DESCRIPTION	Q'TY	REMARKS
2N4–24110–00–X5	FUEL TANK COMP.	2	MXR
3J1–24240–10	.GRAPHIC, FUEL TANK	1	FOR MXR

5. Note that the illustrations for reference in finding parts numbers are not to be used for assembling. When assembling, please use the applicable service manual.

6. The asterisk (*) before a reference number indicates modified items after the first edition.

7. Applicable Serial No.
   Engine Serial No.

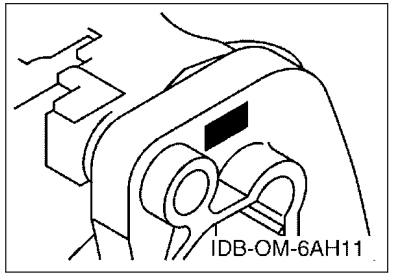

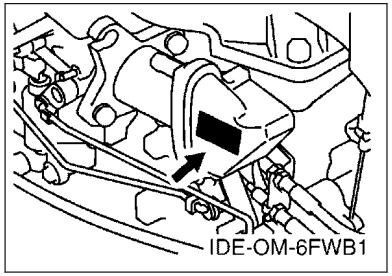

8. Applicable Engine Starting Serial No.

Model	Serial No.	Model	Serial No.
F6D	6MCK-1001209		

9. Applicable Colour Code

Abbreviation	Colour Name	Colour Code
DBN1	DARK BLUISH GRAY 1	008D

10. Quantity Column Information

Column No.	Name Of Q'ty Column	Applicable Model
1	MH	F6DMH
2	M	F6DM

AVANT–PROPOS

Ce catalogue de pièces détachées concerne les pièces pour le(s) modèle(s) indiqué(s) sur la page de couverture. Lorsque vous commandez des pièces de rechange, veuillez vous référer à ce catalogue de pieces détachées et indiquer clairement les numéros et les noms des pièces détachées.

1. Les modifications ou ajouts ayant été effectués après la parution du catalogue de pièces détachées seront décrits dans les Bulletins d'information concernant les pièces détachées.
   Il est recommandé que vous apportiez les corrections nécessaires au catalogue des pièces détachées en vous référant aux Bulletins d'information.

2. Abréviations
   Dans ce catalogue, les abréviations suivantes sont utilisées:
   "UR" Utiliser le numéro de pièces spécifié.
   "UN" Utiliser autant que nécessaire.
   "AP" Pièces de substitution
   "LM" Fabrication locale (les pièces doivent être commandées localement.)
   "F#" N° de cadre (applicable au N° de série)
   "O/S" Surdimensionné

3. Nombre de pièces d'un assemblage
   - Les pièces fournies comme composants d'un assemblage sont précédées d'un point (.) de la manière indiquée ci–dessous.
   - Le chiffre apparaissant à la droite de chaque composant indique la quantité de pièces pour chaque unité d'assemblage.

N° PIECES	DESCRIPTION	QTE	REMARQUES
2F5–83310–60	ENS. CLIGNOTANT AVANT	2	
115–83311–60	.AMPOULE (6V–18W)	1	

4. Les couleurs concernant les graphiques sont indiquées dans la colonne "REMARQUES", comme indiqué ci–dessous.

N° PIECES	DESCRIPTION	QTE	REMARQUES
2N4–24110–00–X5	RESERVOIR A ESSENCE.	2	MXR
3J1–24240–10	.GRAPHIQUE	1	POUR MXR

5. Veuillez noter que les illustrations sont indiquées à titre de référence pour trouver les numéros de pièces, non pour être utilisées lors de l'assemblage. Lors de l'assemblage, veuillez utiliser le manuel d'entretien adéquat.

6. L'astérisque (*) placé devant un numéro de référence indique des éléments qui ont été modifiés après la première édition.

7. N° de série applicable
   N° de Série du moteur

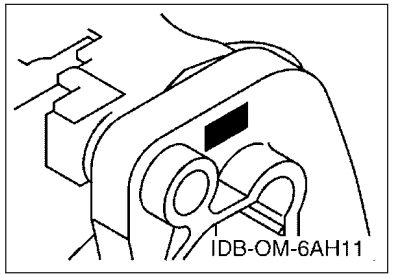

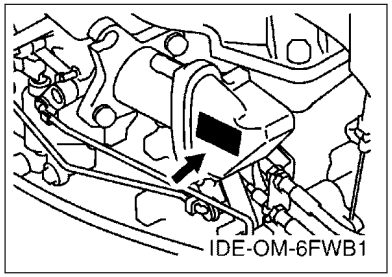

8. N° de série initial du moteur applicable

Modèle	N° de série	Modèle	N° de série
F6D	6MCK-1001209		

9. Code couleur applicable

Abréviation	Nom de la couleur	Code couleur
DBN1	DARK BLUISH GRAY 1	008D

10. Informations relatives à la colonne Quantité

N° de la colonne	Nom de la colonne Qté	Modèle applicable
1	MH	F6DMH
2	M	F6DM

CONTENTS

SCHEDULED SERVICE PARTS.....1
TOP COWLING.....2
CYLINDER & CRANKCASE 1.....3
CRANKSHAFT & PISTON.....4
CYLINDER & CRANKCASE 2.....5
VALVE.....6
INTAKE.....7
CARBURETOR.....8
OIL PUMP.....9
FUEL.....10
STARTER.....12
GENERATOR.....14
ELECTRICAL.....15
BOTTOM COWLING.....16
STEERING.....18
STEERING FRICTION.....20
CONTROL 1.....21
CONTROL 2.....23
REMO CON ATTACHMENT.....25
BRACKET 1.....26
BRACKET 2.....28
UPPER CASING.....29
OIL PAN.....30
LOWER CASING & DRIVE 1.....31
LOWER CASING & DRIVE 2.....34
FUEL TANK.....35
STEERING GUIDE.....36
REMOTE CONTROL BOX.....37
REMOTE CONTROL ASSY.....38
OPTIONAL PARTS 1.....40
OPTIONAL PARTS 2.....42
OPTIONAL PARTS 3.....43
REPAIR KIT 1.....44
REPAIR KIT 2.....45
REPAIR KIT 3.....46

INDEX

NUMERICAL INDEX.....47

TABLE DES MATIERES

PIECES MAINTENANCE PERIODIQUE.....1
CAPOT SUPERIEUR..... 2
CYLINDRE & CARTER 1..... 3
VILEBREQUIN & PISTON.....4
CYLINDRE & CARTER 2..... 5
SOUPAPE..... 6
ADMISSION.....7
CARBURATEUR..... 8
POMPE A HUILE.....9
CARBURANT..... 10
DEMARREUR.....12
GENERATRICE.....14
ELECTRIQUE.....15
CAPOT INFERIEUR.....16
DIRECTION.....18
CUVETTE POIGNEE DE DIRECTION.....20
COMMANDE 1..... 21
COMMANDE 2..... 23
COMMANDE A DISTANCE.....25
SUPPORT 1..... 26
SUPPORT 2..... 28
FOURREAU.....29
VENTILATEUR D'HUILE.....30
BOITIER D'HELICE TRANSMISSION1.....31
BOITIER D'HELICE TRANSMISSION2.....34
RESERVOIR A CARBURANT.....35
FIXATION DE DIRECTION..... 36
BOITIER DE COMMANDE A DISTANCE..... 37
BOITIER DE COMMANDE A DISTANCE..... 38
PIECES OPTIONNELLES 1.....40
PIECES OPTIONNELLES 2.....42
PIECES OPTIONNELLES 3.....43
KITS DE REPARATION 1..... 44
KITS DE REPARATION 2..... 45
KITS DE PEPARATION 3.....46

INDEX

INDEX NUMERIQUE.....47

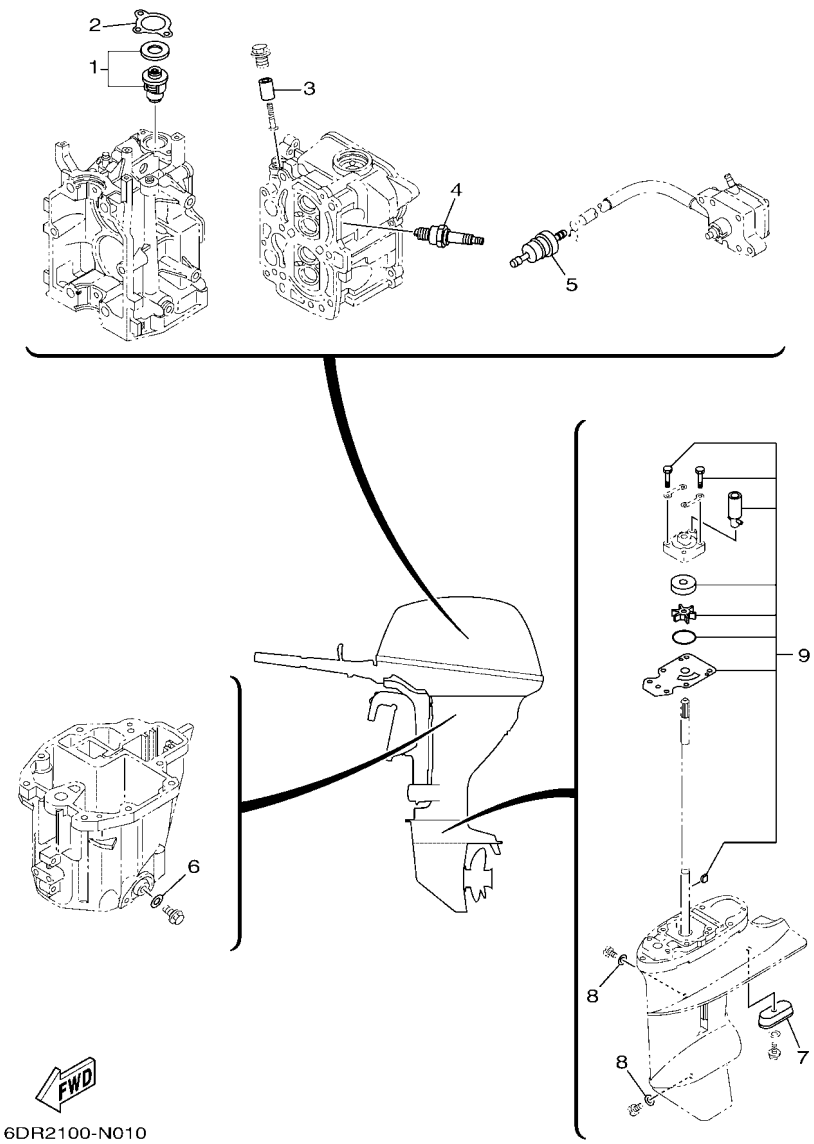

FIG. 1 SCHEDULED SERVICE PARTS — PIECES MAINTENANCE PERIODIQUE

REF. NO.	PART NO. N° PIECES	DESCRIPTION DESCRIPTION	MH	M				REMARKS REMARQUES
1	66M–12411–01	THERMOSTAT THERMOSTAT	1	1				
2	6G8–12414–A0	GASKET, COVER JOINT, COUVERCLE	1	1				
3	6G8–11325–00	ANODE ANODE	1	1				
4	94702–00274	PLUG, SPARK (NGK BR6HS-10) BOUGIE D'ALLUMAGE(NGK BR6HS-10	2	2				
5	68T–24251–01	STRAINER 1 FILTRE 1	1	1				
6	90430–10M11	GASKET JOINT	1	1				
7	68T–45251–00	ANODE ANODE	1	1				
8	90430–08003	GASKET JOINT	2	2				
9	68T–W0078–02	WATER PUMP REPAIR KIT KIT DE REPARATION DE LA POMPE	1	1				

FIG. 2 TOP COWLING — CAPOT SUPERIEUR

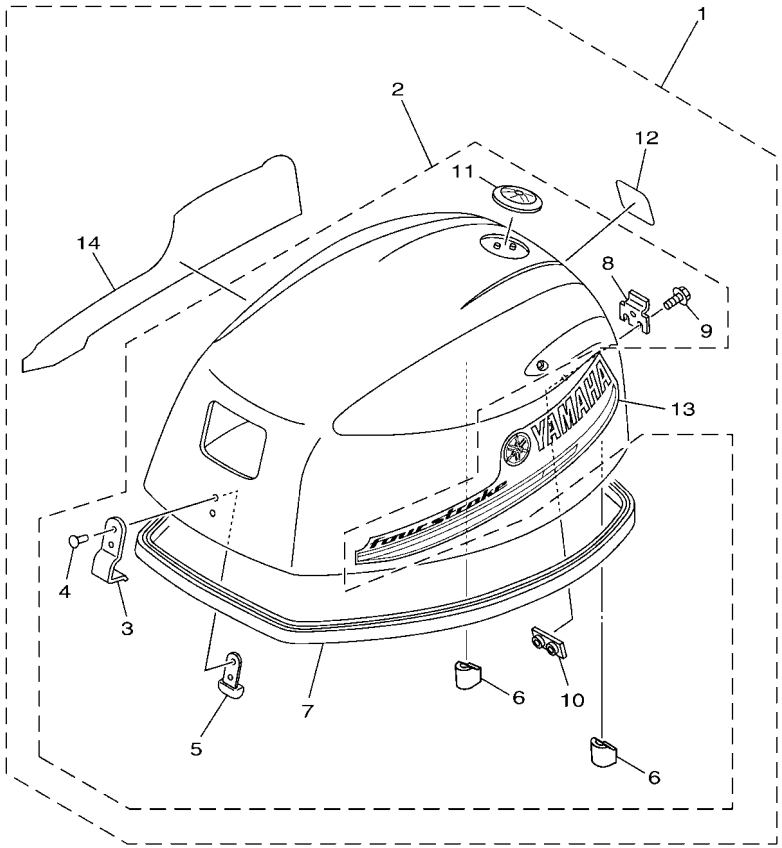

6FW3100-R020

REF. NO.	PART NO. N° PIECES	DESCRIPTION DESCRIPTION	MH	M				REMARKS REMARQUES
1	6MC–42610–00	TOP COWLING ASSY CAPOT (ENS.)	1	1				
2	6DR–4261A–02	.TOP COWLING W/O GRAPHICS .CAPOT SUPERIEUR SANS GRAPHIQUE	1	1				
3	6DR–42651–00	..HOOK ..CROCHET	1	1				
4	90266–04005	..RIVET ..RIVET	2	2				
5	6DR–42649–01	..HOLDER, CLAMP BAND ..SUPPORT, SANDOW DE SERRAGE	1	1				
6	6BG–42662–01	..DAMPER ..AMORTISSEUR	2	2				
7	60R–42615–00	..SEAL ..JOINT	1	1				
8	60R–42652–00	..HOOK ..CROCHET	1	1				
9	97595–05514	..BOLT, WITH WASHER ..VIS HEXAGONAL AVC RONDELLE	2	2				
10	68T–42649–00	..HOLDER, CLAMP BAND ..SUPPORT, SANDOW DE SERRAGE	1	1				
11	6AH–42697–10	..TUNING FORK MARK ..MARQUE, YAMAHA	1	1				
12	6MC–42678–00	.GRAPHIC, REAR .ADHESIF, ARRIERE	1	1				
13	60R–42675–01	.GRAPHIC, SIDE 1 .EMBLEME	1	1				
14	60R–42676–11	.GRAPHIC, SIDE 2 .EMBLEME	1	1				

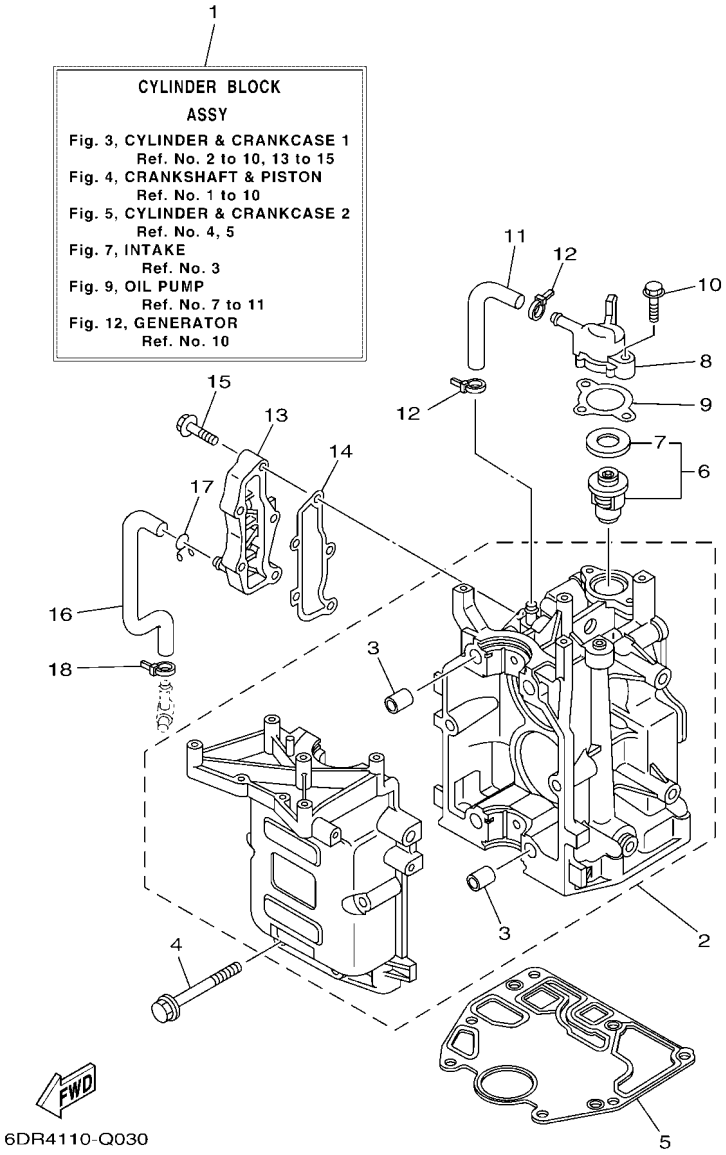

FIG. 3 CYLINDER & CRANKCASE 1 — CYLINDRE & CARTER 1

REF. NO.	PART NO. N° PIECES	DESCRIPTION DESCRIPTION	MH	M				REMARKS REMARQUES
1	6AU–W009B–00–1S	CYLINDER BLOCK ASSY CYLINDRE GROUPE (ENS.)	1	1				
2	6AU–15100–00	CRANKCASE ASSY CARTER DE MOTEUR COMPLET	1	1				
3	99530–12016	.PIN, DOWEL .GOUJON, D'ASSEMBLAGE	4	4				
4	90119–08M29	BOLT, WITH WASHER BOULON, AVEC RONDELLE	6	6				
5	68T–11351–00	GASKET, CYLINDER JOINT, D'EMBASE	1	1				
6	66M–12411–01	THERMOSTAT THERMOSTAT	1	1				
7	688–12412–00	.SEAL, THERMOSTAT .JOINT, THERMOSTAT	1	1				
8	68T–12413–00–1S	COVER, THERMOSTAT COUVERCLE, THERMOSTAT	1	1				
9	6G8–12414–A0	GASKET, COVER JOINT, COUVERCLE	1	1				
10	90119–06MA2	BOLT, WITH WASHER BOULON, AVEC RONDELLE	2	2				
11	68T–12481–00	PIPE 1 DURITE 1	1	1				
12	90465–11M10	CLAMP BRIDE	2	2				
13	6AU–41113–00–1S	OUTER COVER, EXHAUST COUVERCLE, ECHAPPEMENT	1	1				
14	68T–41114–A0	GASKET, EXHAUST OUTER COVER JOINT, COUVERCLE D'ECHAPPEMENT	1	1				
15	90119–06MA3	BOLT, WITH WASHER BOULON, AVEC RONDELLE	5	5				
16	68T–12482–00	PIPE 2 DURITE 2	1	1				
17	90467–10M04	CLIP JONC	1	1				
18	90465–11M10	CLAMP BRIDE	1	1				

FIG. 4 CRANKSHAFT & PISTON — VILEBREQUIN & PISTON

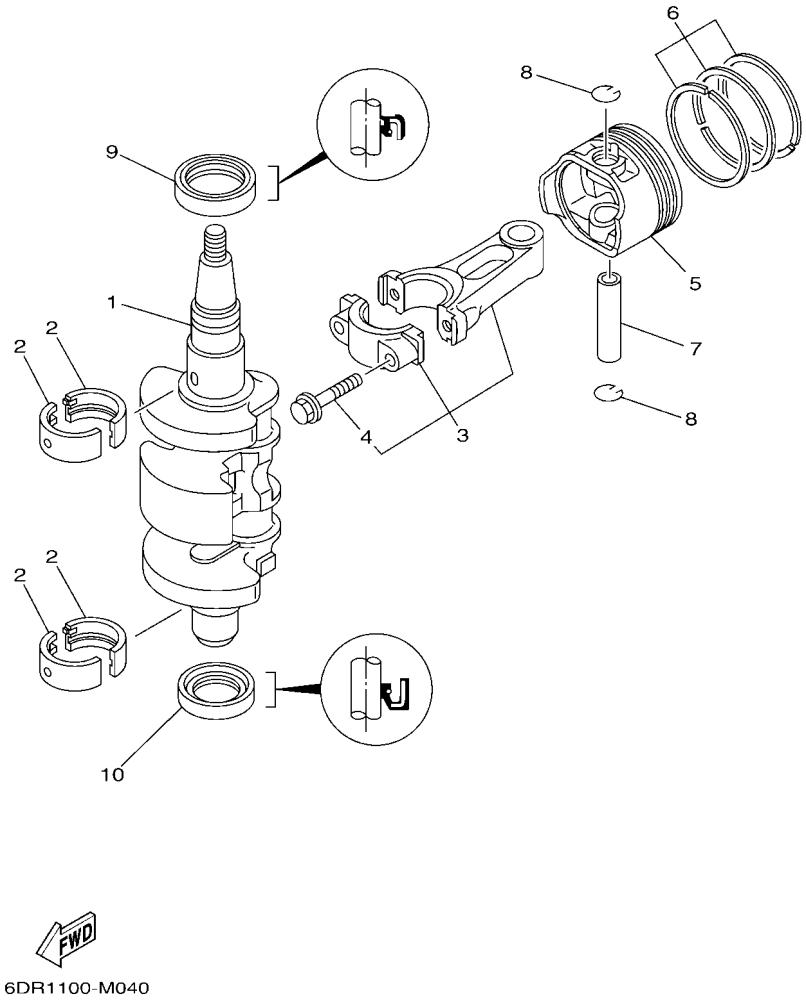

REF. NO.	PART NO. N° PIECES	DESCRIPTION DESCRIPTION	MH	M				REMARKS REMARQUES
1	6AU–11411–00	CRANKSHAFT VILEBREQUIN COMPLET	1	1				
2	68T–11416–01	PLANE BEARING, CRANKSHAFT 1 COUSSINET DE VILEBREQUIN 1	4	4				UR BROWN UR BROWN
	68T–11416–11	PLANE BEARING, CRANKSHAFT 1 COUSSINET DE VILEBREQUIN 1	4	4				UR BLACK UR BLACK
	68T–11416–21	PLANE BEARING, CRANKSHAFT 1 COUSSINET DE VILEBREQUIN 1	4	4				UR BLUE UR BLUE
3	6AU–11650–00	CONNECTING ROD ASSY BIELLE COMPLETTE	2	2				
4	67D–11654–00	.BOLT, CONNECTING ROD .BOULON, BIELLE	2	2				
5	6AU–11631–00–96	PISTON (STD) PISTON (STD)	2	2				
	6AU–11635–00	PISTON (0.25MM O/S) PISTON (0.25MM O/S)	2	2				AP AP
	6AU–11636–00	PISTON (0.50MM O/S) PISTON (0.50MM O/S)	2	2				AP AP
6	68T–11603–01	PISTON RING SET (STD) JEU DE SEGMENTS (STD)	2	2				
	68T–11604–01	PISTON RING SET (0.25MM O/S) JEU DE SEGMENTS (0.25MM O/S)	2	2				AP AP
	68T–11605–01	PISTON RING SET (0.50MM O/S) JEU DE SEGMENTS (0.50MM O/S)	2	2				AP AP
7	68T–11633–00	PIN, PISTON AXE, PISTON	2	2				
8	93450–15023	CIRCLIP CIRCLIP	4	4				
9	93102–30M22	OIL SEAL JOINT SPY	1	1				
10	93101–25M69	OIL SEAL JOINT SPY	1	1				

FIG. 5 CYLINDER & CRANKCASE 2 — CYLINDRE & CARTER 2

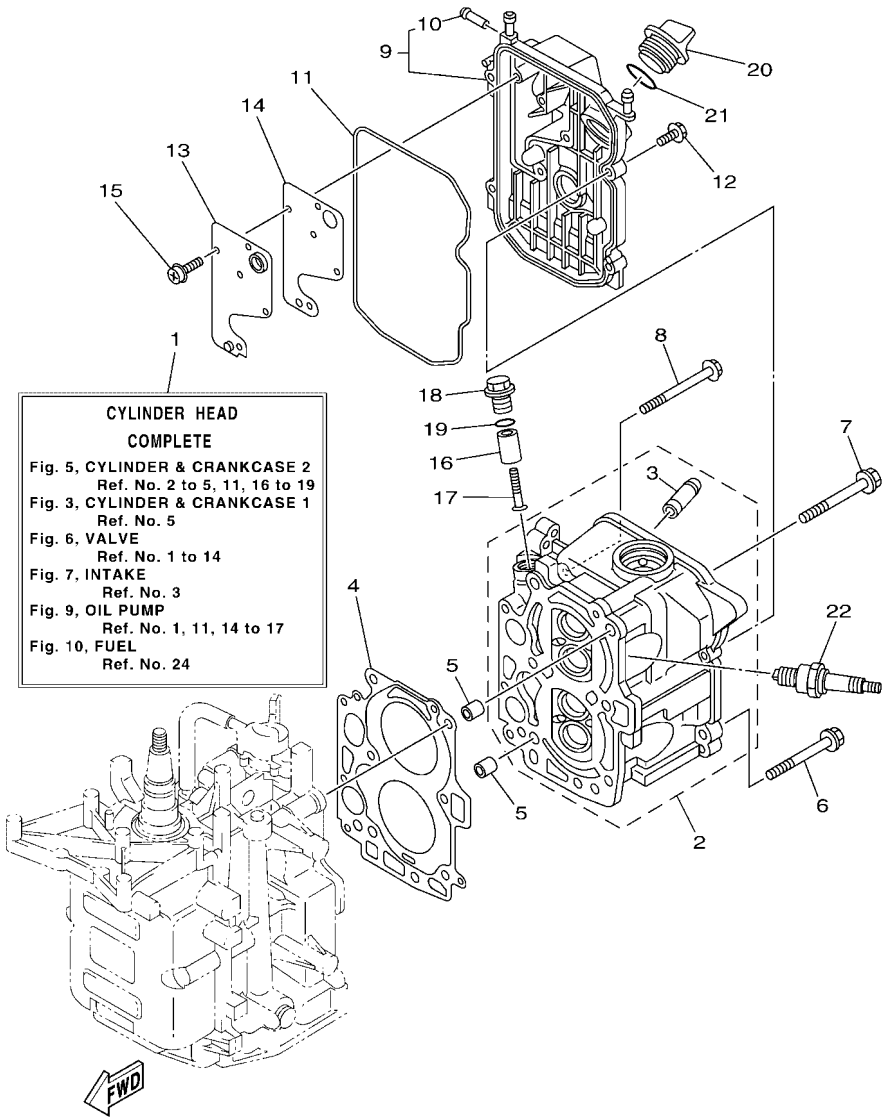

REF. NO.	PART NO. N° PIECES	DESCRIPTION DESCRIPTION	MH	M				REMARKS REMARQUES
1	6AU–W009A–02–1S	CYLINDER HEAD COMPLETE CULASSE (ENS.)	1	1				
2	6AU–11111–00–1S	HEAD, CYLINDER 1 CULASSE, 1	1	1				
3	6AU–11133–10	.GUIDE, VALVE 1 .GUIDE, SOUPAPE 1	4	4				
4	68T–11181–00	GASKET, CYLINDER HEAD 1 JOINT, DE CULASSE 1	1	1				
5	99530–10114	PIN, DOWEL GOUJON, D'ASSEMBLAGE	2	2				
6	90105–08M36	BOLT, FLANGE BOULON, A COLLERETTE	2	2				
7	90105–08M78	BOLT, FLANGE BOULON, A COLLERETTE	4	4				
8	90119–06049	BOLT, WITH WASHER BOULON, AVEC RONDELLE	3	3				
9	68T–11191–01–1S	COVER, CYLINDER HEAD 1 COUVERCLE, CULASSE 1	1	1				
10	650–24378–00	.PIPE, JOINT 4 .DURITE RACCORDEMENT 3	1	1				
11	68T–11356–00	SEAL, CYLINDER 2 JOINT, SPY CYLINDRE	1	1				
12	97E95–06520	BOLT, HEXAGON W/W DEEP RECESS VIS HEXAGONAL AVC RONDELLE	4	4				
13	68T–11168–00	COVER, BREATHER COUVERCLE, RENIFLARD	1	1				
14	68T–11169–A0	GASKET, BREATHER COVER JOINT, COUVERCLE DE RENIFLARD	1	1				
15	97607–04210	SCREW, WITH WASHER VIS, AVEC RONDELLE	5	5				
16	6G8–11325–00	ANODE ANODE	1	1				
17	98980–05025	SCREW, BIND VIS, DE PRESSION	1	1				
18	6G8–11197–A0	PLUG, BLIND PLOT, BORGNE	1	1				
19	93210–13M63	O-RING JOINT TORIQUE	1	1				
20	6G8–15363–00	PLUG, OIL PLOT, HUILE	1	1				
21	93210–24M79	O-RING JOINT TORIQUE	1	1				
22	94702–00274	PLUG, SPARK (NGK BR6HS-10) BOUGIE D'ALLUMAGE(NGK BR6HS-10	2	2				

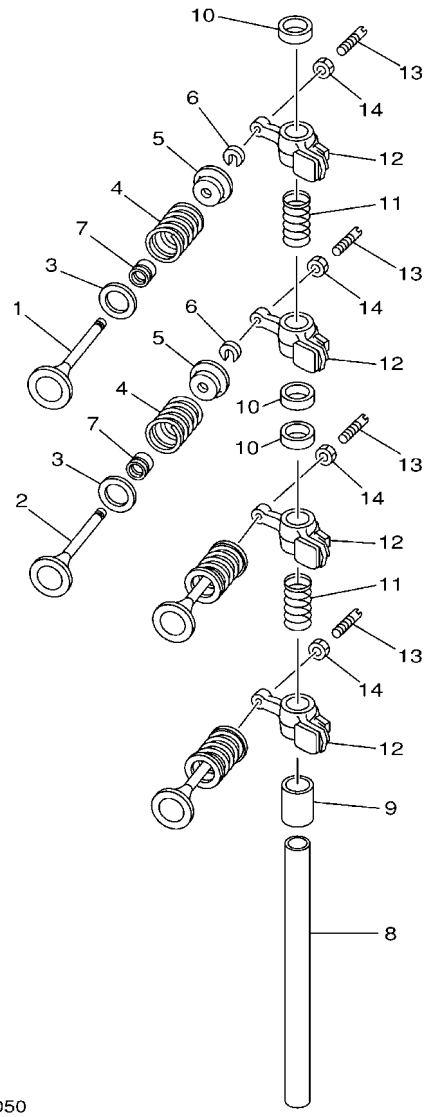

68R0010-0050

FIG. 6 VALVE SOUPAPE

REF. NO.	PART NO. N° PIECES	DESCRIPTION DESCRIPTION	MH	M				REMARKS REMARQUES
1	6AU–12111–00	VALVE, INTAKE SOUPAPE, ADMISSION	2	2				
2	6AU–12121–00	VALVE, EXHAUST SOUPAPE, ECHAPPEMENT	2	2				
3	68T–12116–00	SEAT, VALVE SPRING SIEGE, RESSORT DE SOUPAPE	4	4				
4	60R–12113–00	SPRING, VALVE INNER RESSORT DE SOUPAPE, INTERNE	4	4				
5	7NJ–12117–00	RETAINER, VALVE SPRING BUTEE DE RESSORT DE SOUPAPE	4	4				
6	7NJ–12118–00	LOCK, VALVE SPRING RETAINER FRAISE, SOUPAPE	4	4				
7	51Y–12119–00	SEAL, VALVE STEM JOINT, QUEUE DE SOUPAPE	4	4				
8	68T–12146–00	SHAFT, ROCKER AXE, CULBUTEUR	1	1				
9	90387–13M56	COLLAR COLLERETTE	1	1				
10	90387–14M03	COLLAR COLLERETTE	3	3				
11	90501–12M40	SPRING, COMPRESSION RESSORT, COMPRESSION	2	2				
12	68T–12151–00	ARM, VALVE ROCKER CULBUTEUR	4	4				
13	6G8–12159–00	SCREW, VALVE ADJUSTING VIS, REGLAGE DE SOUPAPE	4	4				
14	6G8–12158–00	NUT, LOCK CONTRE-ECROU	4	4				

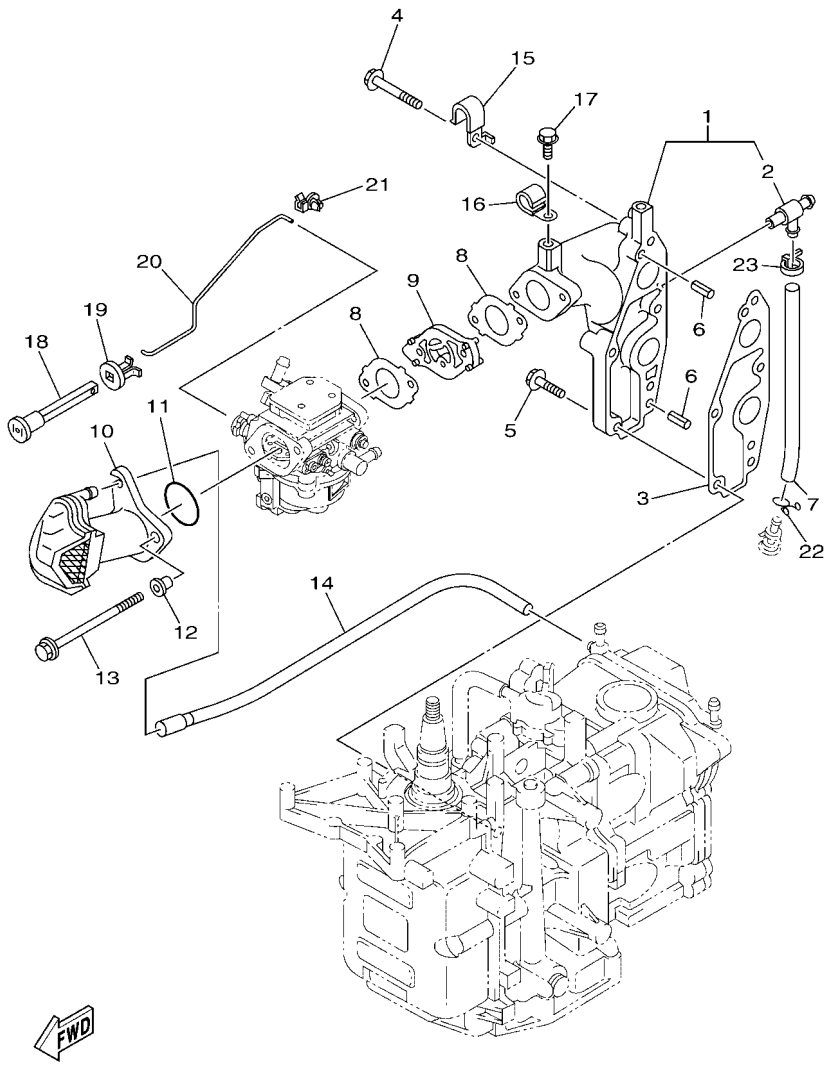

6MC1300-W070

FIG. 7 INTAKE — ADMISSION

REF. NO.	PART NO. N° PIECES	DESCRIPTION DESCRIPTION	MH	M				REMARKS REMARQUES
1	68T–13641–20–1S	MANIFOLD, INTAKE 1 TUBULURE, ADMISSION 1	1	1				FLUSHING KIT FLUSHING KIT
2	67F–12482–00	.PIPE 2 .DURITE 2	1	1				
3	68T–13645–00	GASKET, MANIFOLD 1 JOINT, TUBULURE 1	1	1				
4	90119–06MA5	BOLT, WITH WASHER BOULON, AVEC RONDELLE	3	3				
5	90119–06MA3	BOLT, WITH WASHER BOULON, AVEC RONDELLE	2	2				
6	91690–50014	PIN, SPRING AGRAFFE	2	2				
7	90445–09M20	HOSE (L95) DURITE (L95)	1	1				FLUSHING KIT FLUSHING KIT
8	68T–13646–A0	GASKET, MANIFOLD 2 JOINT, TUBULURE 2	2	2				
9	6MC–14271–00	INSULATOR ISOLATEUR	1	1				
10	6AU–14440–00	SILENCER ASSY, INTAKE SIENCIEUX D'ADMISSION	1	1				
11	93210–31MJ5	O-RING JOINT TORIQUE	1	1				
12	90387–06M70	COLLAR COLLERETTE	2	2				
13	90105–06188	BOLT, FLANGE BOULON, A COLLERETTE	2	2				
14	68T–12483–00	PIPE 3 DURITE 3	1	1				
15	90465–08M99	CLAMP BRIDE	1	1				
16	90465–08M83	CLAMP BRIDE	1	1				FLUSHING KIT FLUSHING KIT
17	97E95–06510	BOLT, HEXAGON W/W DEEP RECESS VIS HEXAGONAL AVC RONDELLE	1	1				FLUSHING KIT FLUSHING KIT
18	6H4–41271–02	KNOB, CHOKE BOUTON DE STARTER	1	1				
19	689–41273–00	GROMMET PASSE-FIL	1	1				
20	68T–41256–00	ROD, CHOKE 1 TRINGLE 1, STARTER	1	1				
21	6J8–41262–00	JOINT, CHOKE LEVER RACCORD, LEVIER DE STARTER	1	1				
22	90467–08M18	CLIP JONC	1	1				
23	90465–11M10	CLAMP BRIDE	1	1				

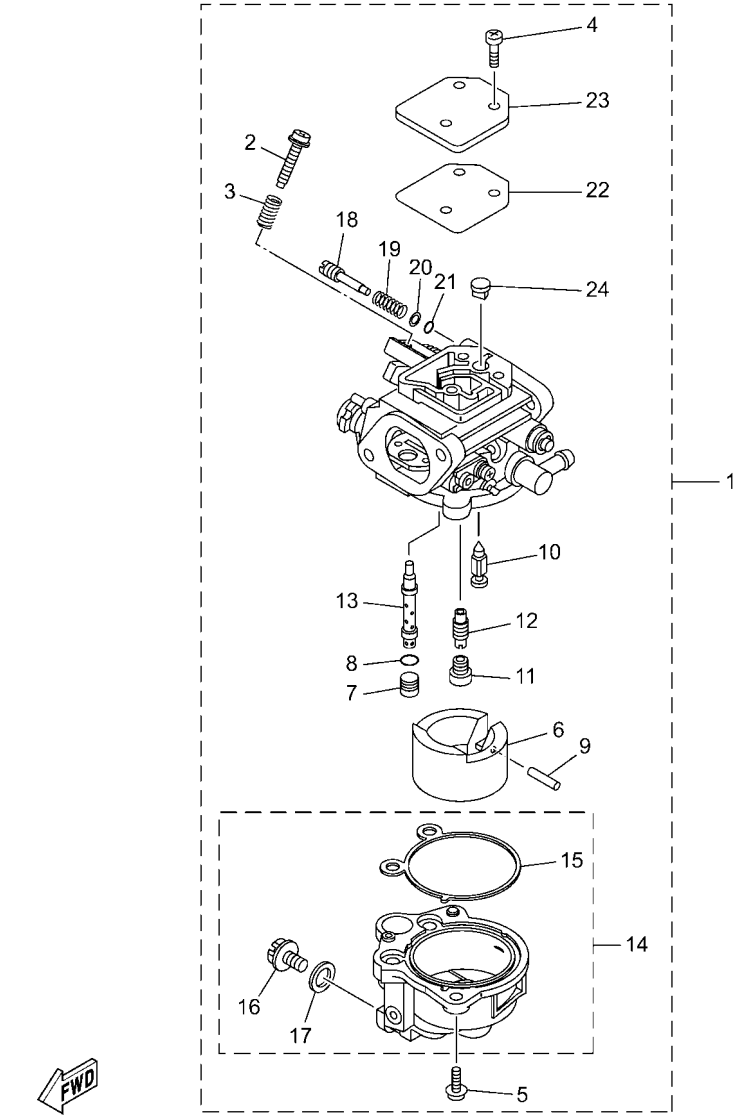

60RA700-M080

FIG. 8 CARBURETOR CARBURATEUR

REF. NO.	PART NO. N° PIECES	DESCRIPTION DESCRIPTION	MH	M				REMARKS REMARQUES
1	6MC–14301–20	CARBURETOR ASSY 1 CARBURATEUR COMPLET 1	1	1				
2	69W–14321–00	.SCREW, THROTTLE .VIS, ACCELERATEUR	1	1				
3	62Y–14212–00	.SPRING, PILOT ADJUSTING .RESSORT, VIS DE RALENTI	1	1				
4	6DR–14321–00	.SCREW, THROTTLE .VIS, ACCELERATEUR	3	3				
5	62Y–14321–00	.SCREW, THROTTLE .VIS, ACCELERATEUR	2	2				
6	6DR–14385–00	.FLOAT .FLOTTEUR	1	1				
7	6DR–1432A–00	.PLUG .PLOT	1	1				
8	6DR–14561–00	.O-RING .JOINT TORIQUE	1	1				
9	4FP–14386–00	.PIN, FLOAT .AXE, FLOTTEUR	1	1				
10	6DR–14336–00	.NEEDLE .AIGUILLE	1	1				
11	6FW–14343–39	.JET, MAIN (#78) .GICLEUR, PRINCIPAL (#78)	1	1				
12	6FW–14342–21	.JET, PILOT (#41) .GICLEUR, RALENTI (#41)	1	1				
13	6FW–14341–00	.NOZZLE, MAIN .PUITS D'AIGUILLE	1	1				
14	60S–14381–00	.BODY, FLOAT CHAMBER .CORPS, CUVE DE FLOTTEUR	1	1				
15	6DR–14984–00	..GASKET, FLOAT CHAMBER ..JOINT, CUVE DE FLOTTEUR	1	1				
16	62Y–14383–30	..SCREW, DRAIN ..BOUCHON, PURGE	1	1				
17	652–14397–00	..O-RING ..JOINT TORIQUE	1	1				
18	6DR–14323–10	.SCREW, AIR ADJUSTING .VIS DE DOSEUR D'AIR	1	1				
19	6DR–14334–00	.SPRING, AIR ADJUSTING .RESSORT, VIS DE DOSEUR D'AIR	1	1				
20	6DR–14285–00	.WASHER .RONDELLE	1	1				
21	6DR–14397–00	.O-RING .JOINT TORIQUE	1	1				
22	6DR–14818–00	.COVER GASKET .JOINT DE COURERCLE	1	1				
23	6DR–14157–00	.COVER, MIXING .COUVERCLE DE CHAMBRE	1	1				
24	6DR–14862–00	.PLUG .PLOT	1	1				

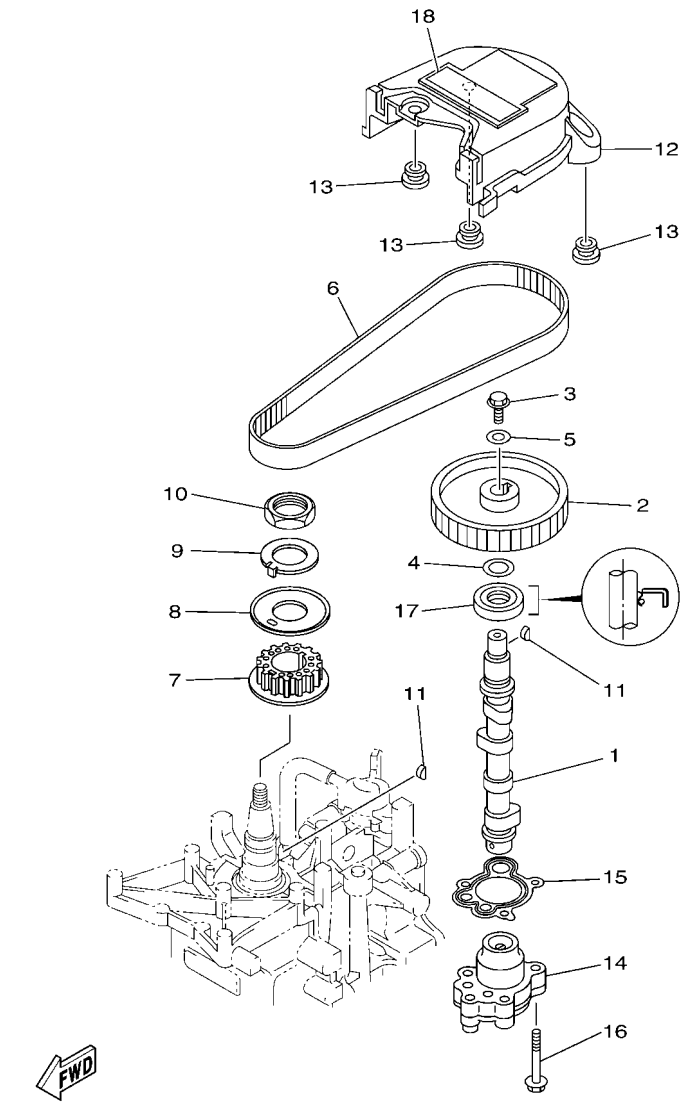

6DR4110-Q090

FIG. 9 OIL PUMP — POMPE A HUILE

REF. NO.	PART NO. N° PIECES	DESCRIPTION DESCRIPTION	MH	M				REMARKS REMARQUES
1	68T–12171–01	CAMSHAFT 1 ARBRE A CAMES 1	1	1				
2	66M–11537–01	GEAR, DRIVEN PIGNON SECONDAIRE	1	1				
3	90105–06M14	BOLT FLANGE BOULON, A COLLERETTE	1	1				
4	90201–13201	WASHER, PLATE RONDELLE, PLATE	1	1				
5	90201–06M94	WASHER, PLATE RONDELLE, PLATE	1	1				
6	68T–46241–00	BELT COURROIE TRAPEZOIDALE	1	1				
7	68T–11536–00	GEAR, DRIVE ENGRENAGE, MENANT	1	1				
8	68T–11557–00	WASHER 1 RONDELLE 1	1	1				
9	6G8–11587–01	WASHER, LOCK RONDELLE, FREIN	1	1				
10	90170–24M09	NUT ECROU	1	1				
11	90280–03M01	KEY, WOODRUFF CLAVETTE, DEMI-LUNE	2	2				
12	6AU–46297–00	COVER, DUST COUVERCLE, POUSSIERE	1	1				
13	90480–10627	GROMMET PASSE-FIL	3	3				
14	68T–13300–00	OIL PUMP ASSY POMPE A HUILE COMPLETE	1	1				
15	68T–13329–00	GASKET, PUMP COVER JOINT, COUVERCLE DE POMPE	1	1				
16	97E95–06530	BOLT, HEXAGON W/W DEEP RECESS VIS HEXAGONAL AVC RONDELLE	3	3				
17	93102–18M21	OIL SEAL JOINT SPY	1	1				
18	6AU–13437–61	MARK, CAUTION MAKER	1	1				

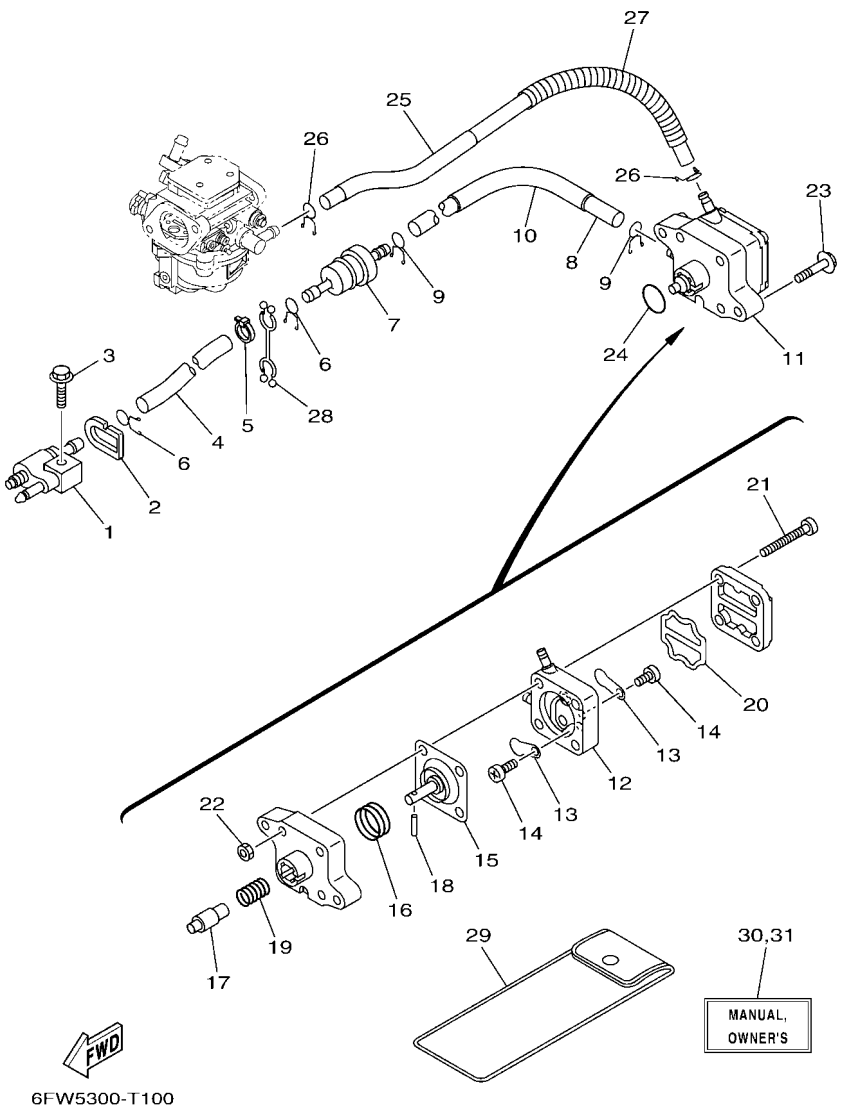

FIG. 10 FUEL CARBURANT

REF. NO.	PART NO. N° PIECES	DESCRIPTION DESCRIPTION	MH	M				REMARKS REMARQUES
1	6G1–24304–11	FUEL PIPE JOINT COMP. 1 DURITE RACCORDEMT. A ESSENCE	1	1				
2	61N–24329–01	SEAL JOINT	1	1				
3	97E95–06525	BOLT, HEXAGON W/W DEEP RECESS VIS HEXAGONAL AVC RONDELLE	1	1				
4	90445–10046	HOSE (L295) DURITE (L295)	1	1				
5	90465–11M10	CLAMP BRIDE	1	1				
6	90467–09M09	CLIP JONC	2	2				
7	68T–24251–01	STRAINER 1 FILTRE 1	1	1				
8	90445–10M50	HOSE (L170) DURITE (L170)	1	1				
9	90467–09M09	CLIP JONC	2	2				
10	90445–16010	HOSE (L140) DURITE (L140)	1	1				
11	68T–24410–02	FUEL PUMP ASSY POMPE A ESSENCE	1	1				
12	66M–24413–01	.BODY 2 .CORPS 2	1	1				
13	6A0–24421–01	.VALVE, CHECK .SOUPAPE, RETENUE	2	2				
14	6E7–14325–00	.SCREW, PAN HEAD .VIS TETE CONIQUE	2	2				
15	66M–24411–02	.DIAPHRAGM .DIAPHRAGME	1	1				
16	66M–24423–00	.SPRING, DIAPHRAGM .RESSORT, DIAPHRAGME	1	1				
17	66M–13131–00	.PLUNGER .PLONGEUR	1	1				
18	66M–24374–00	.PIN .GOUPILLE	1	1				
19	66M–24454–00	.SPRING .RESSORT	1	1				
20	66M–24471–02	.DIAPHRAGM .DIAPHRAGME	1	1				
21	66M–24444–00	.SCREW .VIS	4	4				
22	95380–04600	.NUT .ECROU	4	4				
23	97E95–06630	BOLT, HEXAGON W/W DEEP RECESS VIS HEXAGONAL AVC RONDELLE	2	2				
24	93210–20M65	O-RING JOINT TORIQUE	1	1				
25	6AU–24311–00	PIPE, FUEL 1 DURITE A ESSENCE	1	1				
26	90467–09M09	CLIP JONC	2	2				
27	90447–13014	TUBE DURITE	1	1				

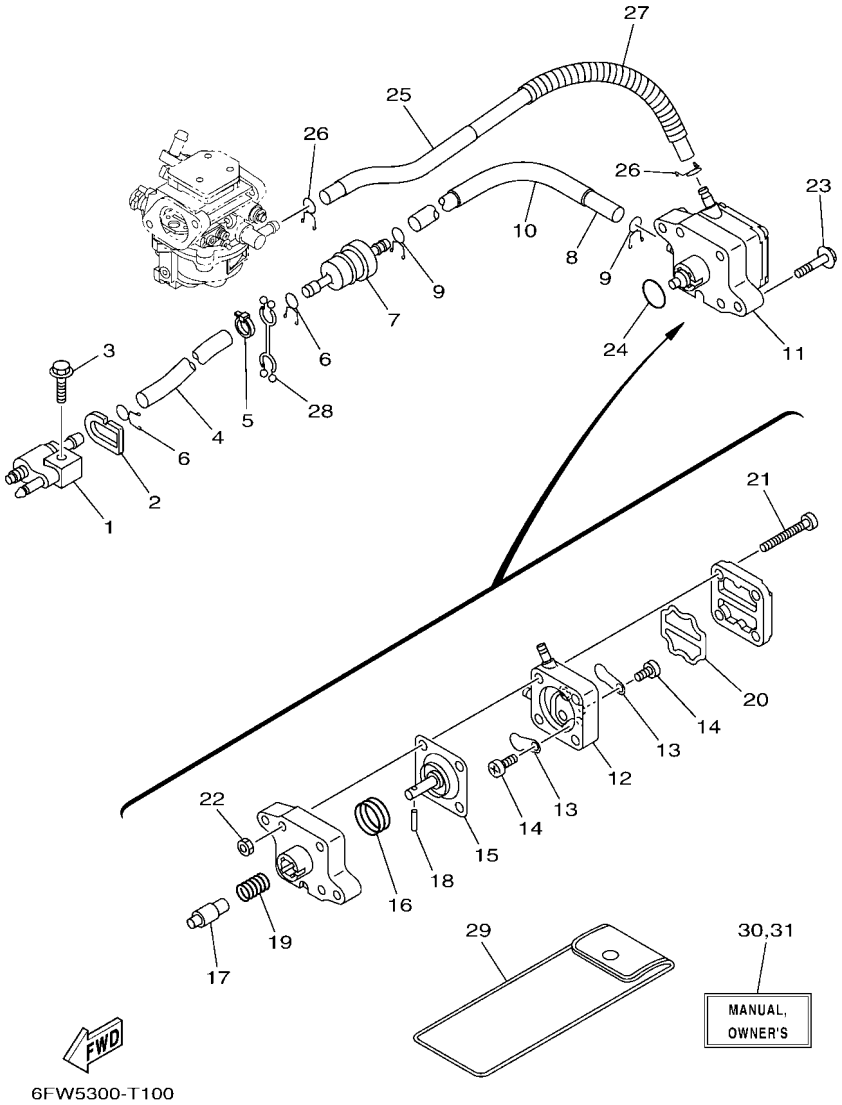

FIG. 10 FUEL CARBURANT

REF. NO.	PART NO. N° PIECES	DESCRIPTION DESCRIPTION	MH	M				REMARKS REMARQUES
28	90464–10M53	CLAMP BRIDE	1	1				
29	68T–28100–02	TOOL KIT TROUSSE A OUTILS	1	1				AP AP
30	6FW–28199–78–E0	MANUAL,OWNER'S MANUEL D'UTILISATION	1	1				UR (E) UR (E)
	6FW–28199–78–F0	MANUAL,OWNER'S MANUEL D'UTILISATION	1	1				UR (F) UR (F)
	6FW–28199–78–S0	MANUAL,OWNER'S MANUEL D'UTILISATION	1	1				UR (ES) UR (ES)
	6FW–28199–78–G0	MANUAL,OWNER'S MANUEL D'UTILISATION	1	1				UR (D) UR (D)
	6FW–28199–78–D0	MANUAL,OWNER'S MANUEL D'UTILISATION	1	1				UR (NL) UR (NL)
	6FW–28199–78–H0	MANUAL,OWNER'S MANUEL D'UTILISATION	1	1				UR (I) UR (I)
31	6FW–28199–88–K0	MANUAL,OWNER'S MANUEL D'UTILISATION	1	1				UR (DK) UR (DK)
	6FW–28199–88–R0	MANUAL,OWNER'S MANUEL D'UTILISATION	1	1				UR (GR) UR (GR)
	6FW–28199–88–P0	MANUAL,OWNER'S MANUEL D'UTILISATION	1	1				UR (P) UR (P)
	6FW–28199–88–N0	MANUAL,OWNER'S MANUEL D'UTILISATION	1	1				UR (N) UR (N)
	6FW–28199–88–M0	MANUAL,OWNER'S MANUEL D'UTILISATION	1	1				UR (S) UR (S)
	6FW–28199–88–L0	MANUAL,OWNER'S MANUEL D'UTILISATION	1	1				UR (SF) UR (SF)

FIG. 11 STARTER DEMARREUR

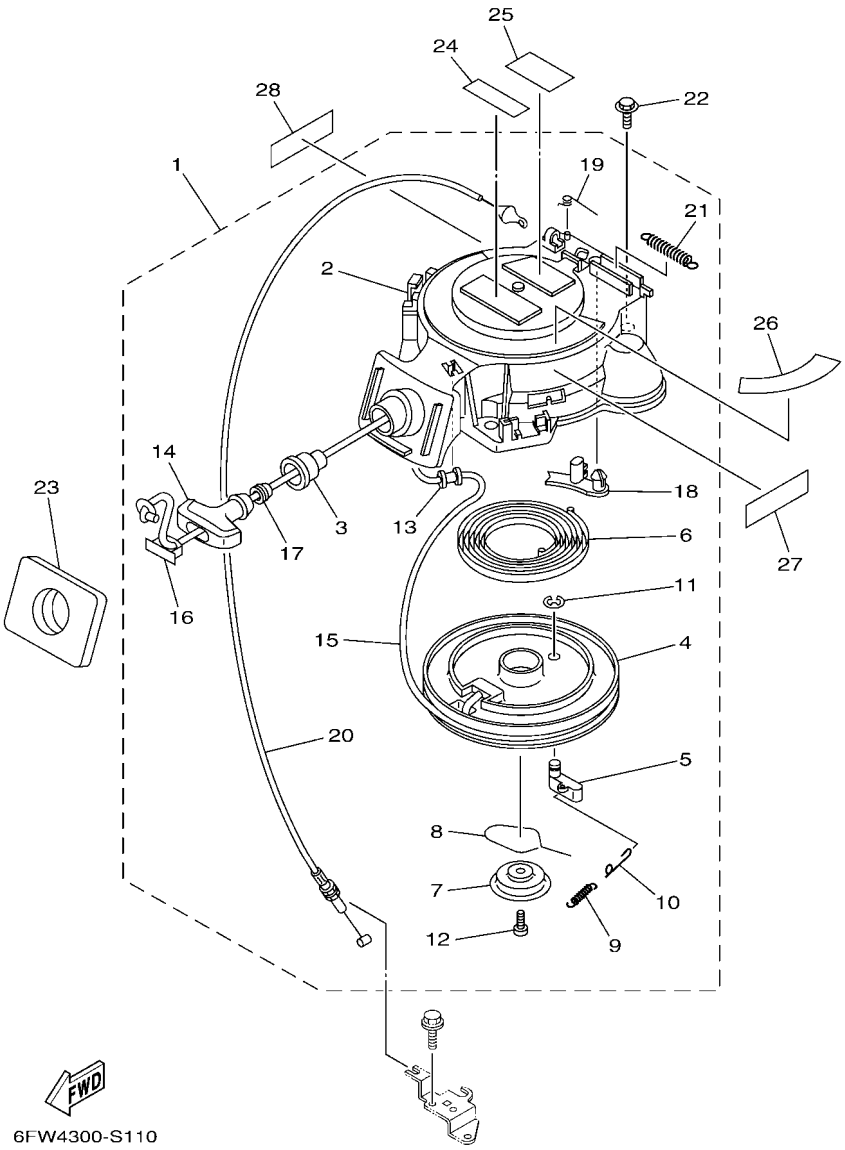

*1:CUT FROM 50M ROLLS,PART NO.90890-44373,CUTTING LENGTH 1.8M

*1:A PRELEVER SUR BOBINE 50M ,REFERENCE 90890-44373,
LONGUEUR DE COUPE 1.8M

REF. NO.	PART NO. N° PIECES	DESCRIPTION DESCRIPTION	MH	M				REMARKS REMARQUES
1	68T–15710–14	STARTER ASSY DEMARREUR COMPLET	1	1				
2	68T–15711–03	.CASE, STARTER .CARTER DE DEMARREUR	1	1				
3	68T–15795–00	.GUIDE, ROPE .GUIDE DE CABLE	1	1				
4	63V–15714–00	.DRUM, SHEAVE .TAMBOUR, POULIE	1	1				
5	63V–15741–00	.PAWL, DRIVE .CLIQUET, ENTRAINEMENT	1	1				
6	63V–15713–00	.SPRING, STARTER .RESSORT DE DEMARREUR	1	1				
7	68T–15716–00	.PLATE, DRIVE .PLAQUE, ENTRAINEMENT	1	1				
8	63V–15705–01	.SPRING, DRIVE PAWL .RESSORT DE CLIQUET	1	1				
9	63V–15767–01	.SPRING .RESSORT	1	1				
10	68T–15784–00	.SPRING, RETURN .RESSORT, RAPPEL	1	1				
11	63V–15744–00	.CIRCLIP .CIRCLIP	1	1				
12	68T–15793–00	.SCREW .VIS	1	1				
13	68T–15764–00	.COLLAR 1 .COLLERETTE 1	1	1				
14	6G1–15755–00	.HANDLE, STARTER .POIGNEE, DE DEMARREUR	1	1				
15	*	.WIRE, STARTER (L:1800MM) .CABLE DE DEMARREUR (L:1800MM)	1	1				*1 *1
16	6G1–15779–00	.COVER .COUVERCLE	1	1				
17	6A0–15789–01	.DAMPER .AMORTISSEUR	1	1				
18	68T–15794–00	.STOPPER .BUTEE	1	1				
19	66T–15734–00	.SPRING, RETURN .RESSORT, RAPPEL	1	1				
20	68T–15770–00	.CABLE COMP., STARTER STOP .CABLE, BUTEE DE DEMAR	1	1				
21	66T–15731–00	.SPRING, RETURN .RESSORT, RAPPEL	1	1				
22	97E95–06520	BOLT, HEXAGON W/W DEEP RECESS VIS HEXAGONAL AVC RONDELLE	3	3				
23	68T–15762–00	SEAL, RUBBER 2 JOINT CAOUTCHOUC 2	1	1				
24	6EE–81995–41	LABEL, WARNING ETIQUETTE, AVERTISSEMENT	1	1				
25	6EE–81995–51	LABEL, WARNING ETIQUETTE, AVERTISSEMENT	1	1				
26	68T–85711–60	MARK, CAUTION MAKER	1	1				
27	6EE–81994–41	LABEL, SAFETY ETIQUETTE, SECURITE	1	1				

FIG. 11 STARTER DEMARREUR

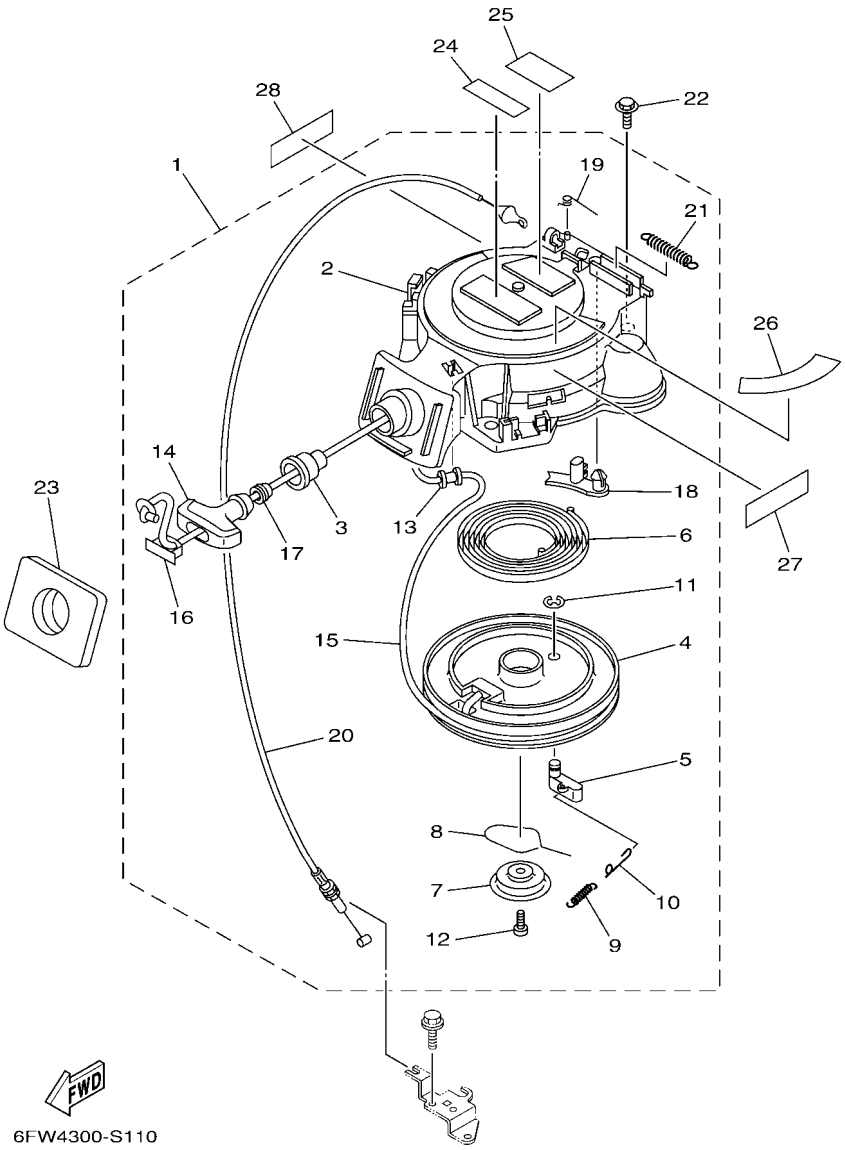

*1:CUT FROM 50M ROLLS,PART NO.90890-44373,CUTTING LENGTH 1.8M

*1:A PRELEVER SUR BOBINE 50M ,REFERENCE 90890-44373,
LONGUEUR DE COUPE 1.8M

REF. NO.	PART NO. N° PIECES	DESCRIPTION DESCRIPTION	MH	M				REMARKS REMARQUES
28	6EE–81994–51	LABEL, SAFETY ETIQUETTE, SECURITE	1	1				

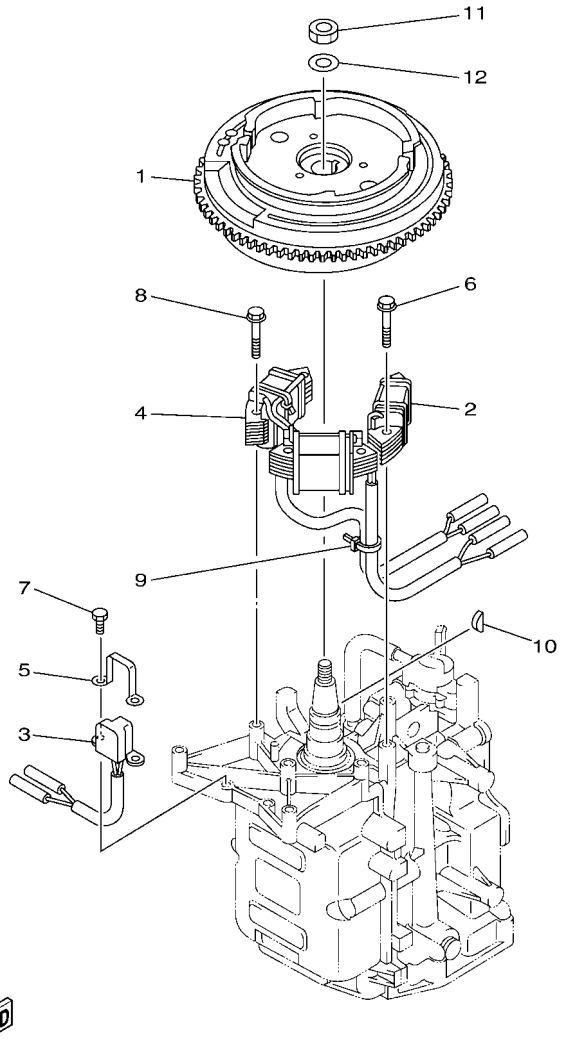

6AV1010-G110

FIG. 12 GENERATOR — GENERATRICE

REF. NO.	PART NO. N° PIECES	DESCRIPTION DESCRIPTION	MH	M				REMARKS REMARQUES
1	6DR–85550–10	ROTOR ASSY ROTOR CPLT	1	1				
2	68T–85520–00	COIL, CHARGE BOBINE, CHARGE	1	1				
3	68T–85580–01	COIL, PULSER BOBINE, PULSEUR	1	1				
4	68T–85533–10	COIL, LIGHTING BOBINE, ECLAIRAGE	1	1				
5	6H2–85582–00	ATTACHMENT, PULSER SUPPORT, PULSEUR	1	1				
6	97513–06530	BOLT, WITH WASHER VIS HEXAGONAL AVC RONDELLE	2	2				
7	97095–05010	BOLT BOULON	2	2				
8	97513–06530	BOLT, WITH WASHER VIS HEXAGONAL AVC RONDELLE	4	4				
9	90465–11M10	CLAMP BRIDE	1	1				
10	90280–04M06	KEY, WOODRUFF CLAVETTE, DEMI-LUNE	1	1				
11	90170–12066	NUT ECROU	1	1				
12	90201–12472	WASHER, PLATE RONDELLE, PLATE	1	1				

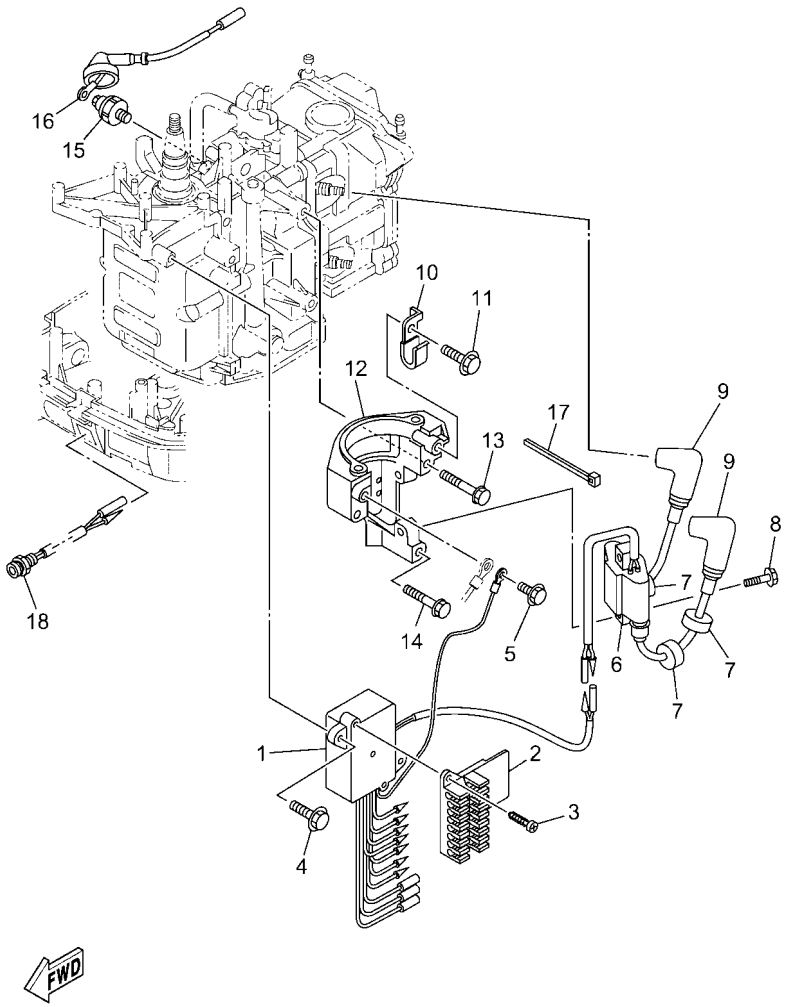

6FWC100-Z130

FIG. 13 ELECTRICAL ELECTRIQUE

REF. NO.	PART NO. N° PIECES	DESCRIPTION DESCRIPTION	MH	M				REMARKS REMARQUES
1	68T–85540–00	C.D.I. UNIT ASSY BLOC C.D.I.	1	1				
2	68T–82522–00	CLAMP, COUPLER BRIDE, DE CONNECTEUR	1	1				
3	97780–40512	SCREW, TAPPING VIS, TETE BOMBEE	2	2				
4	97E95–06520	BOLT, HEXAGON W/W DEEP RECESS VIS HEXAGONAL AVC RONDELLE	2	2				
5	97E95–06512	BOLT, HEXAGON W/W DEEP RECESS VIS HEXAGONAL AVC RONDELLE	1	1				
6	680–85570–02	IGNITION COIL ASSY BOBINE D'ALLUMAGE (ENS.)	1	1				
7	90480–25003	GROMMET PASSE-FIL	3	3				
8	90119–06MA3	BOLT, WITH WASHER BOULON, AVEC RONDELLE	2	2				
9	6E3–82370–21	PLUG CAP ASSY ANTIPARASITE	2	2				
10	90465–08M99	CLAMP BRIDE	1	1				
11	97E95–06512	BOLT, HEXAGON W/W DEEP RECESS VIS HEXAGONAL AVC RONDELLE	1	1				
12	68T–81822–01	BRACKET, STARTING MOTOR SUPPORT, DEMARREUR ELECTRIQUE	1	1				
13	90119–08046	BOLT, WITH WASHER BOULON, AVEC RONDELLE	2	2				
14	90119–08020	BOLT, WITH WASHER BOULON, AVEC RONDELLE	1	1				
15	67F–82504–00	OIL PRESSURE SWITCH ASSY CONTACTEUR DE PRESSION D'HUILE	1	1				
16	68T–82127–11	WIRE, LEAD 2 FIL 2	1	1				
17	90465–11M10	CLAMP BRIDE	1	1				
18	68T–85410–10	EMERGENCY SIGNAL LIGHT ASSY FEU DE DETRESSE	1	1				

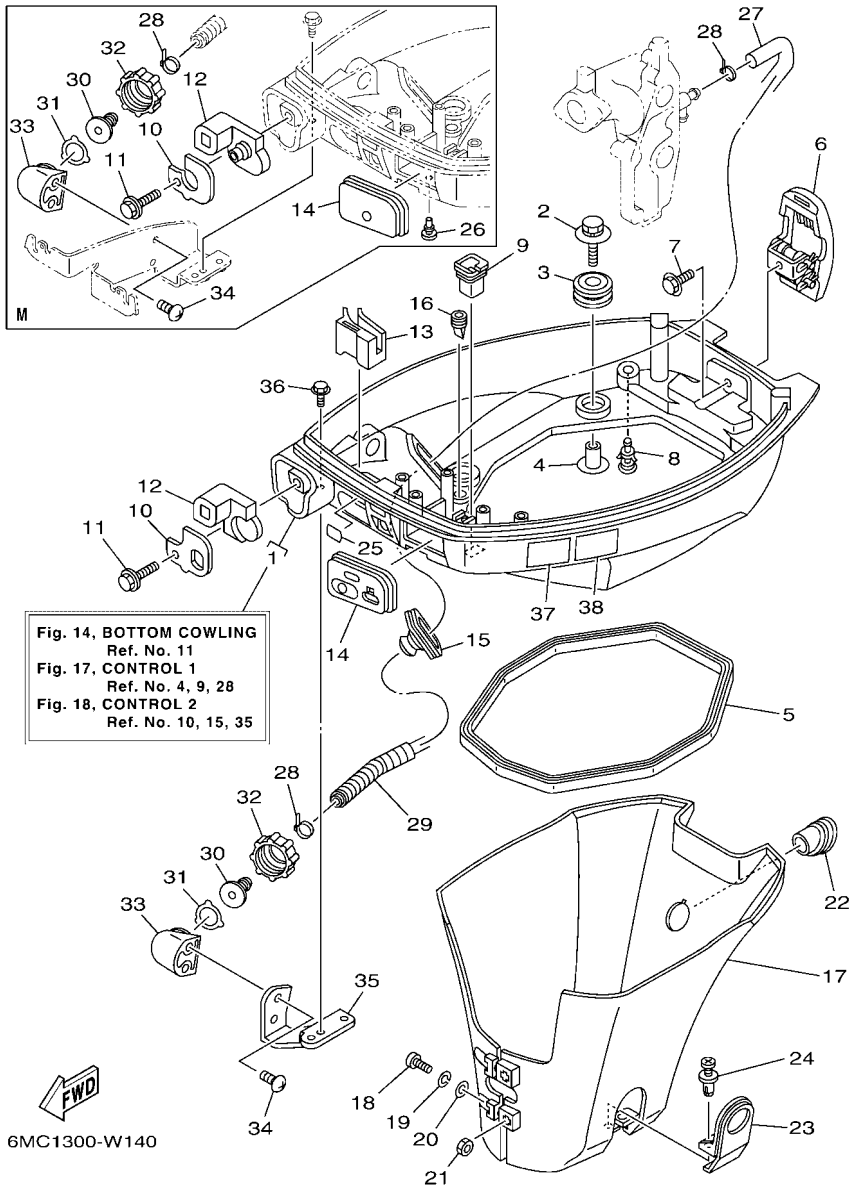

FIG. 14 BOTTOM COWLING — CAPOT INFERIEUR

REF. NO.	PART NO. N° PIECES	DESCRIPTION DESCRIPTION	MH	M				REMARKS REMARQUES
1	6DR–42710–00–8D	BOTTOM COWLING ASSY ENS. EMBASE	1	1				
2	90119–06291	BOLT, WITH WASHER BOULON, AVEC RONDELLE	4	4				
3	90480–21M82	GROMMET PASSE-FIL	4	4				
4	90387–06176	COLLAR COLLERETTE	4	4				
5	68T–42716–10	RUBBER SEAL 1 JOINT EN CAOUTCHOUC 1	1	1				
6	6AU–42801–00	COWLING CLAMP COMP. BRIDE DE CAPOT COMP.	1	1				
7	97E95–06512	BOLT, HEXAGON W/W DEEP RECESS VIS HEXAGONAL AVC RONDELLE	1	1				
8	6BL–44391–00	NIPPLE, HOSE RACCORD D'ESSENCE	1	1				
9	682–42727–01	GROMMET PASSE-FIL	1	1				
10	6DR–42761–00	STOPPER PLAQUETTE	1					
	6DR–42761–10	STOPPER PLAQUETTE		1				
11	90109–06M86	BOLT BOULON	1	1				
12	6DR–42725–01	GROMMET PASSE-FIL	1					
	6DR–42725–30	GROMMET PASSE-FIL		1				
13	68T–26367–01	PROTECTOR PROTECTEUR	1					
14	68T–42724–20	GROMMET PASSE-FIL	1					
	68T–42724–50	GROMMET PASSE-FIL		1				
15	688–42726–11	GROMMET PASSE-FIL	1	1				FLUSHING KIT FLUSHING KIT
16	65W–42717–00	RUBBER, SEAL 2 JOINT EN CAOUTCHOUC 2	2	2				
17	68T–42741–00	APRON, 1 CAPOT LATERAL 1	1	1				
18	97885–06030	SCREW, PAN HEAD VIS, A ENCOCHE	2	2				
19	92995–06100	WASHER, SPRING RONDELLE, GROWER	2	2				
20	92995–06600	WASHER RONDELLE	2	2				
21	95380–06600	NUT, HEXAGON ECROU	2	2				
22	68T–42717–01	RUBBER, SEAL 2 JOINT EN CAOUTCHOUC 2	1	1				
23	68T–42771–00	APRON, 2 CAPOT LATERAL 2	1	1				
24	90338–06M20	PLUG PLOT	2	2				

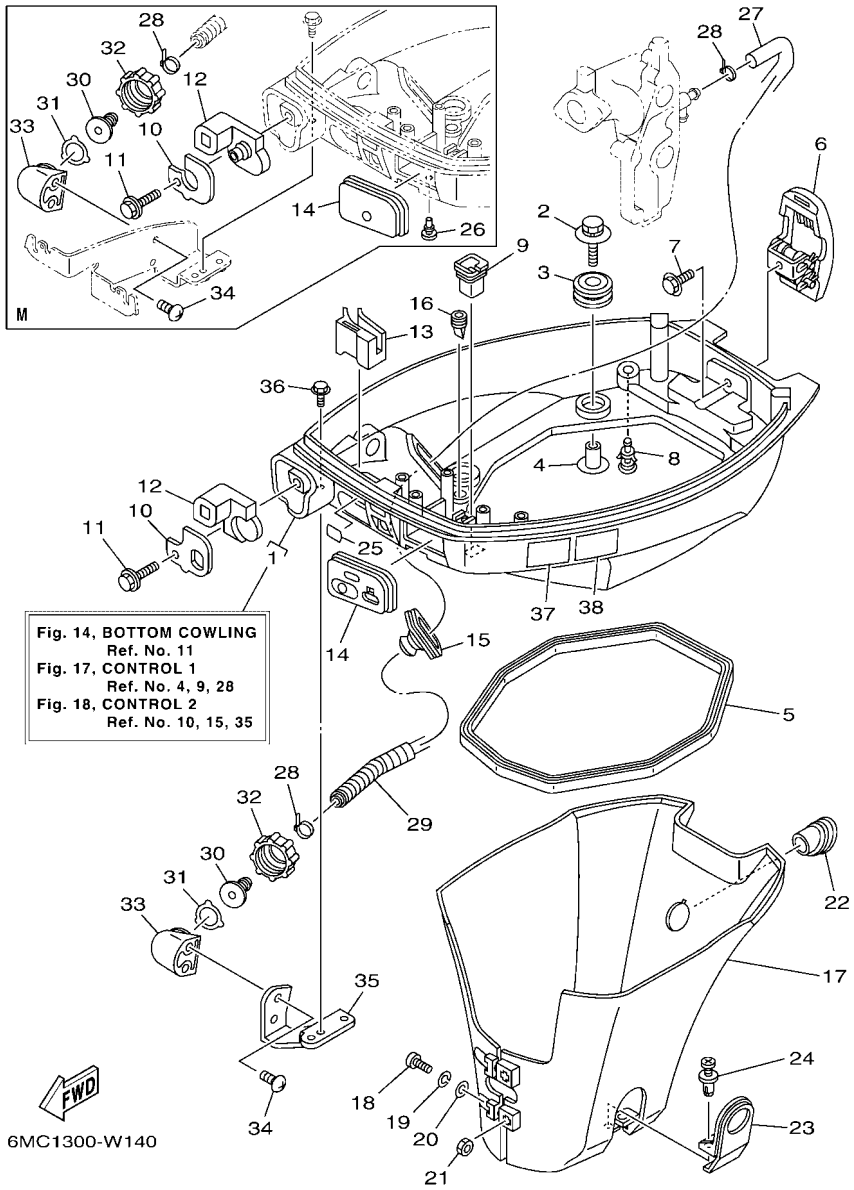

Fig. 14, BOTTOM COWLING
Ref. No. 11
Fig. 17, CONTROL 1
Ref. No. 4, 9, 28
Fig. 18, CONTROL 2
Ref. No. 10, 15, 35

FIG. 14 BOTTOM COWLING — CAPOT INFERIEUR

REF. NO.	PART NO. N° PIECES	DESCRIPTION DESCRIPTION	MH	M				REMARKS REMARQUES
25	65W–84342–00	SEAT, EMBLEM SIEGE, EMBLEME	1	1				
26	90480–06M19	GROMMET PASSE-FIL		1				
27	6E5–12481–00	PIPE 1 DURITE 1	1	1				FLUSHING KIT FLUSHING KIT
28	90465–11M10	CLAMP BRIDE	2	2				FLUSHING KIT FLUSHING KIT
29	90447–13M00	TUBE DURITE	1	1				FLUSHING KIT FLUSHING KIT
30	6R3–12582–00	JOINT, HOSE 2 RACCORD DE TUYAU 1	1	1				FLUSHING KIT FLUSHING KIT
31	6R3–12583–00	GASKET, HOSE JOINT JOINT	1	1				FLUSHING KIT FLUSHING KIT
32	6R3–12581–00	JOINT, HOSE 1 JOINT DE TUYAU	1	1				FLUSHING KIT FLUSHING KIT
33	6DR–12572–00	ADAPTER ADAPTATEUR	1	1				FLUSHING KIT FLUSHING KIT
34	90167–06002	SCREW, TAPPING VIS, TETE FRAISEE	2	2				FLUSHING KIT FLUSHING KIT
35	68T–12535–20	PLATE PLAQUE	1					FLUSHING KIT FLUSHING KIT
36	97E95–06512	BOLT, HEXAGON W/W DEEP RECESS VIS HEXAGONAL AVC RONDELLE	2					FLUSHING KIT FLUSHING KIT
37	6EE–42794–41	LABEL, WARNING (GENERAL) ETIQUETTE, AVERTISSEMENT	1	1				
38	6EE–42794–51	LABEL, WARNING (GENERAL) ETIQUETTE, AVERTISSEMENT	1	1				

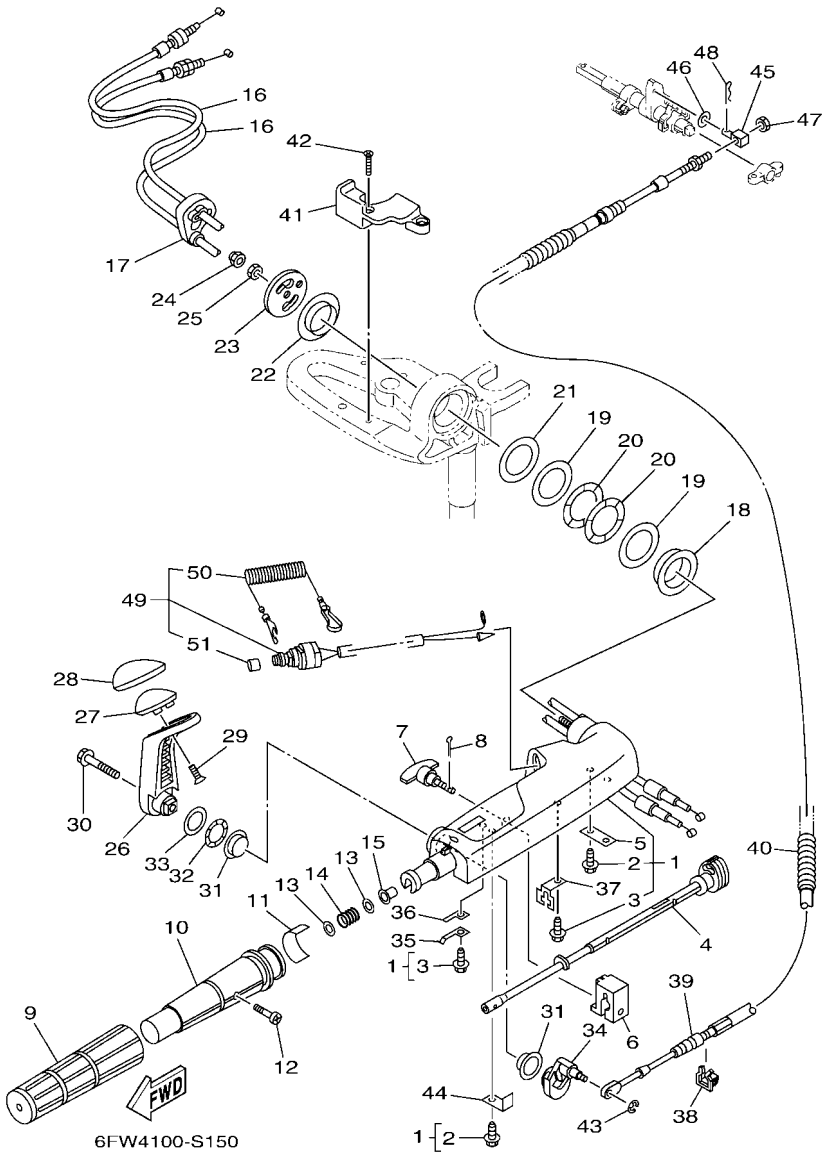

FIG. 15 STEERING — DIRECTION

REF. NO.	PART NO. N° PIECES	DESCRIPTION DESCRIPTION	MH	M				REMARKS REMARQUES
1	6DR–42101–00–8D	HANDLE, STEERING POIGNEE	1					
2	90109–06M86	.BOLT .BOULON	2					
3	90109–06M80	.BOLT .BOULON	2					
4	6DR–42138–01	LEVER, THROTTLE LEVIER, ACCELERATEUR	1					
5	65W–42159–00	STAY SUPPORT	1					
6	6DR–42126–00	FRICTION, STEERING HANDLE GRIP CUVETTE, POIGNEE DE DIRECTION	1					
7	65W–42125–00	BOLT, FRICTION ADJUSTING BOULON	1					
8	91490–16010	PIN. COTTER GOUPILLE	1					
9	67D–42177–01	RUBBER, HANDLE CAOUTCHOUC, POIGNEE	1					
10	67D–42119–01	GRIP, STEERING HANDLE POIGNEE, BARRE FRANCHE	1					
11	6FW–42137–00	INDICATOR, THROTTLE INDICATEUR, ACCELERATION	1					
12	90152–05011	SCREW, COUNTERSUNK VIS, TETE NOYEE	1					
13	90201–10M02	WASHER, PLATE RONDELLE, PLATE	2					
14	90501–23215	SPRING, COMPRESSION RESSORT, COMPRESSION	1					
15	90386–08032	BUSH DOUILLE	1					
16	6DR–26301–00	THROTTLE CABLE ASSY CABLE D'ACCELERATEUR	2					
17	6DR–26316–01	BOOT, THROTTLE CABLE SOUFFLET, CABLE D'ACCELERATEUR	1					
18	66R–42171–00	BUSHING COUSSINET	1					
19	90201–43M00	WASHER, PLATE RONDELLE, PLATE	2					
20	90206–43M22	WASHER, WAVE RONDELLE, ONDULEE	2					
21	90202–43M57	WASHER, PLATE RONDELLE, PLATE	1					
22	90386–40M99	BUSH DOUILLE	1					
23	65W–42131–01	COVER, HANDLE STEERING COUVERCLE	1					
24	95780–10300	NUT, FLANGE ECROU	1					
25	95380–10700	NUT ECROU	1					
26	6DR–44111–00–8D	HANDLE, GEAR SHIFT POIGNEE, LEVIER D'EMBRAYAGE	1					
27	6DR–44173–00	LEVER, SHIFT CONTROL POIGNEE, INVERSION	1					

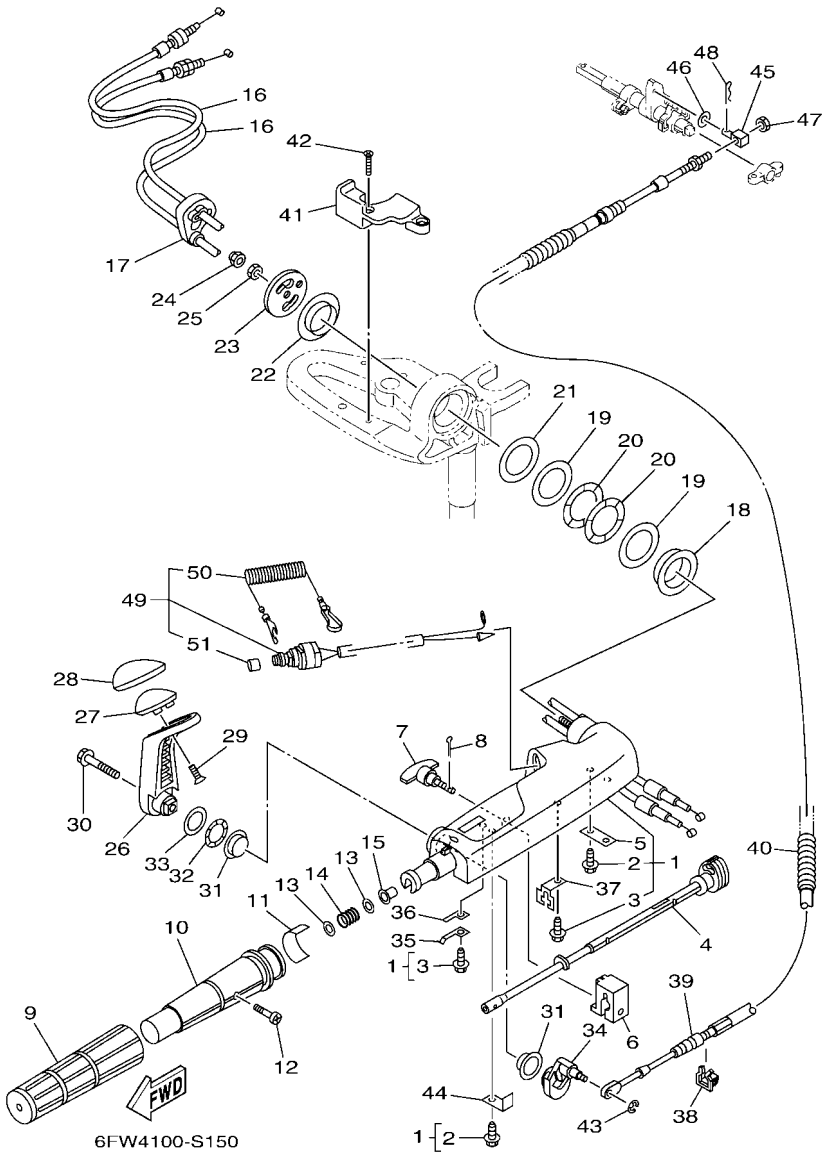

FIG. 15 STEERING — DIRECTION

REF. NO.	PART NO. N° PIECES	DESCRIPTION DESCRIPTION	MH	M				REMARKS REMARQUES
28	6DR–42129–01	BUSHING, RUBBER DOUILLE, CAOUTCHOUC	1					
29	97780–60920	SCREW, TAPPING VIS, TETE BOMBEE	2					
30	97E95–08535	BOLT, HEXAGON W/W DEEP RECESS VIS HEXAGONAL AVC RONDELLE	1					
31	90386–26MA3	BUSH DOUILLE	2					
32	90206–26M25	WASHER, WAVE RONDELLE, ONDULEE	1					
33	90202–26M59	WASHER, PLATE RONDELLE, PLATE	1					
34	6DR–44113–A0	CAM PLATE, HANDLE CAME, VERROUILLAGE	1					
35	6DR–44116–00	SPRING RESSORT	1					
36	66R–44118–00	BRACKET SUPPORT	1					
37	66R–48538–00	CLAMP, CABLE 1 COLLIER	1					
38	63D–48538–00	CLAMP, CABLE 1 COLLIER	1					
39	6DR–48321–00	CABLE CABLE	1					
40	90447–13015	TUBE DURITE	1					
41	6DR–82594–00	CLAMP BRIDE	1					
42	90151–05003	SCREW, COUNTERSUNK VIS, TETE NOYEE	2					
43	99080–04600	CIRCLIP CIRCLIP	1					
44	6DR–44114–00	STOPPER PLAQUETTE	1					
45	66R–48344–01	CABLE END, REMOTE CONTROL CHAPE CABLE	1					
46	90201–06117	WASHER, PLATE RONDELLE, PLATE	1					
47	90170–05M38	NUT ECROU	1					
48	91490–20012	PIN. COTTER GOUPILLE	1					
49	65W–82575–01	ENGINE STOP SWITCH ASSY COUPE CIRCUIT CPLT	1					
50	682–82556–00	.LANYARD, STOP SWITCH .CORDON DU COUPE CIRCUIT	1					
51	689–8257Y–00	.CAP .COUVERCLE	1					

FIG. 16 STEERING FRICTION — CUVETTE POIGNEE DE DIRECTION

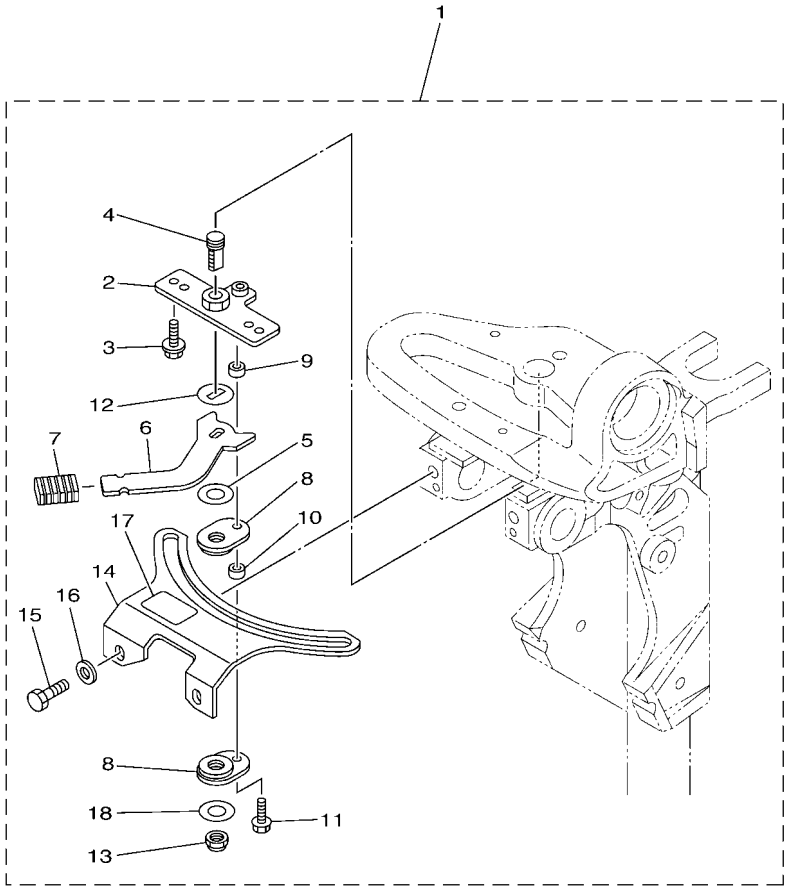

6FW4100-S160

REF. NO.	PART NO. N° PIECES	DESCRIPTION DESCRIPTION	MH	M				REMARKS REMARQUES
1	6AH–42508–03	STEERING FRICTION ASSY DIRECTION FRICTION (ENS.)	1					
2	68T–42525–01	.PLATE, FRICTION .PLAQUE, FRICTION	1					
3	90119–05018	.BOLT, WITH WASHER .BOULON, AVEC RONDELLE	2					
4	67C–42562–A0	.SHAFT, STEERING LOCK .ARBRE,ANTIVOL DE DIRECTION	1					
5	90202–10M56	.WASHER, PLATE .RONDELLE, PLATE	1					
6	68T–42561–00	.KNOB, STEERING LOCK .BOUTON	1					
7	689–43633–01	.COVER, TILT LEVER .COUVERCLE	1					
8	65W–42528–00	.PLATE, FRICTION .PLAQUE, FRICTION	2					
9	90387–05053	.COLLAR .COLLERETTE	1					
10	90387–05054	.COLLAR .COLLERETTE	1					
11	97595–05520	.BOLT, WITH WASHER .VIS HEXAGONAL AVC RONDELLE	1					
12	90209–10M26	.WASHER .RONDELLE	1					
13	90185–10M14	.NUT, SELF-LOCKING .ECROU,AUTO-BLOQUANT	1					
14	6AH–42527–00	.PLATE, FRICTION .PLAQUE, FRICTION	1					
15	97D95–08016	.BOLT, HEXAGON DEEP RECESS .VIS HEXAGONAL	2					
16	90201–08065	.WASHER, PLATE .RONDELLE, PLATE	2					
17	68T–43155–00	.MARK 1 .ETIQUETTE 1	1					
18	90201–106M5	.WASHER, PLATE .RONDELLE, PLATE	1					

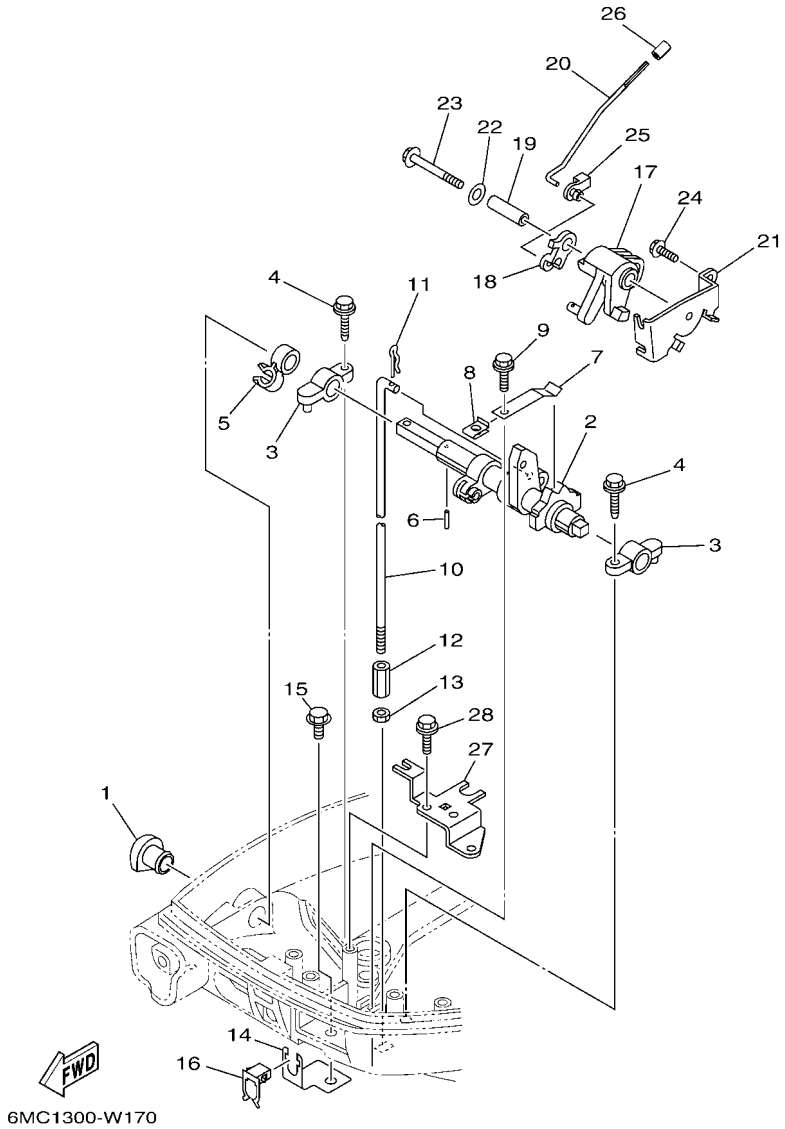

FIG. 17 CONTROL 1 — COMMANDE 1

REF. NO.	PART NO. N° PIECES	DESCRIPTION DESCRIPTION	MH	M				REMARKS REMARQUES
1	68T–42726–01	GROMMET PASSE-FIL	1					
2	68T–44121–03	LEVER, SHIFT ROD LEVIER, TIGE D'INVERSION	1					
3	6G1–41662–01–94	BRACKET 2 SUPPORT 2	2					
4	90109–06M81	BOLT BOULON	2					
5	90464–10M60	CLAMP BRIDE	1					
6	91690–30014	PIN, SPRING AGRAFFE	1					
7	65W–44116–00	SPRING RESSORT	1					
8	6DR–44117–01	BRACKET SUPPORT	1					
9	90109–06M86	BOLT BOULON	1					
10	68T–44143–01	ROD, SHIFT 1 TIGE D'EMBRAYAGE 1	1					S(17.0") S(17.0")
	68T–44143–11	ROD, SHIFT 1 TIGE D'EMBRAYAGE 1	1					L(22.0") L(22.0")
11	90468–18001	CLIP JONC	1					
12	61N–44146–00	CONNECTOR, SHIFT ROD 2 CONNECTEUR, TIGE D'INVERSION 2	1					
13	95380–06700	NUT ECROU	1					
14	68T–48538–00	CLAMP, CABLE 1 COLLIER	1					
15	97E95–06512	BOLT, HEXAGON W/W DEEP RECESS VIS HEXAGONAL AVC RONDELLE	1					
16	63D–48538–00	CLAMP, CABLE 1 COLLIER	1					
17	68T–41638–00	PULLEY POULIE	1					
18	68T–41283–00	LEVER, FREE ACCEL. LEVIER	1					
19	90387–06M59	COLLAR COLLERETTE	1					
20	6AU–41211–00	LINK, ACCEL. BIELLETTE, ACCELERATION	1					
21	68T–14497–00	STAY, THROTTLE WIRE SUPPORT DE BOISSEAU	1					
22	92990–06200	WASHER, PLAIN RONDELLE, PLATE	1					
23	97E95–06545	BOLT, HEXAGON W/W DEEP RECESS VIS HEXAGONAL AVC RONDELLE	1					
24	97E95–06512	BOLT, HEXAGON W/W DEEP RECESS VIS HEXAGONAL AVC RONDELLE	1					
25	6J8–41262–00	JOINT, CHOKE LEVER RACCORD, LEVIER DE STARTER	1					
26	6FW–13448–00	CAP CAPUCHON	1					

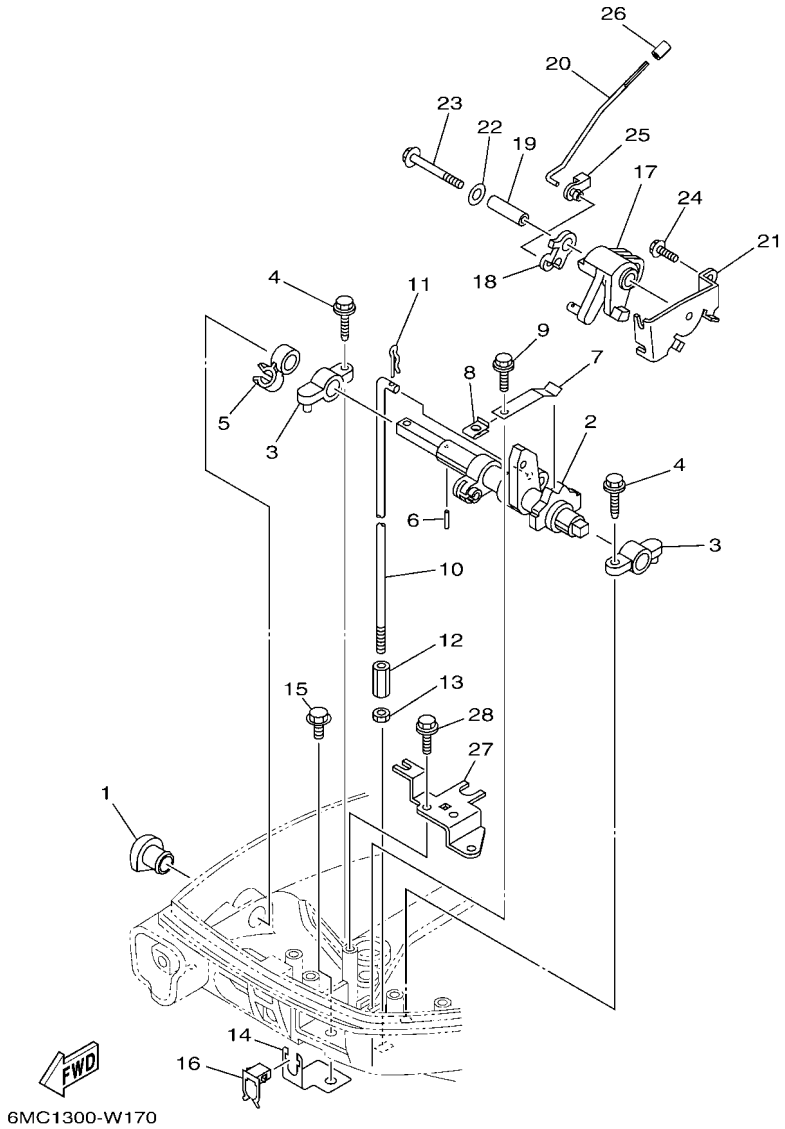

FIG. 17 CONTROL 1 — COMMANDE 1

REF. NO.	PART NO. N° PIECES	DESCRIPTION DESCRIPTION	MH	M				REMARKS REMARQUES
27	68T–15774–20	STAY 4 SUPPORT 4	1					
28	90109–06M86	BOLT BOULON	2					

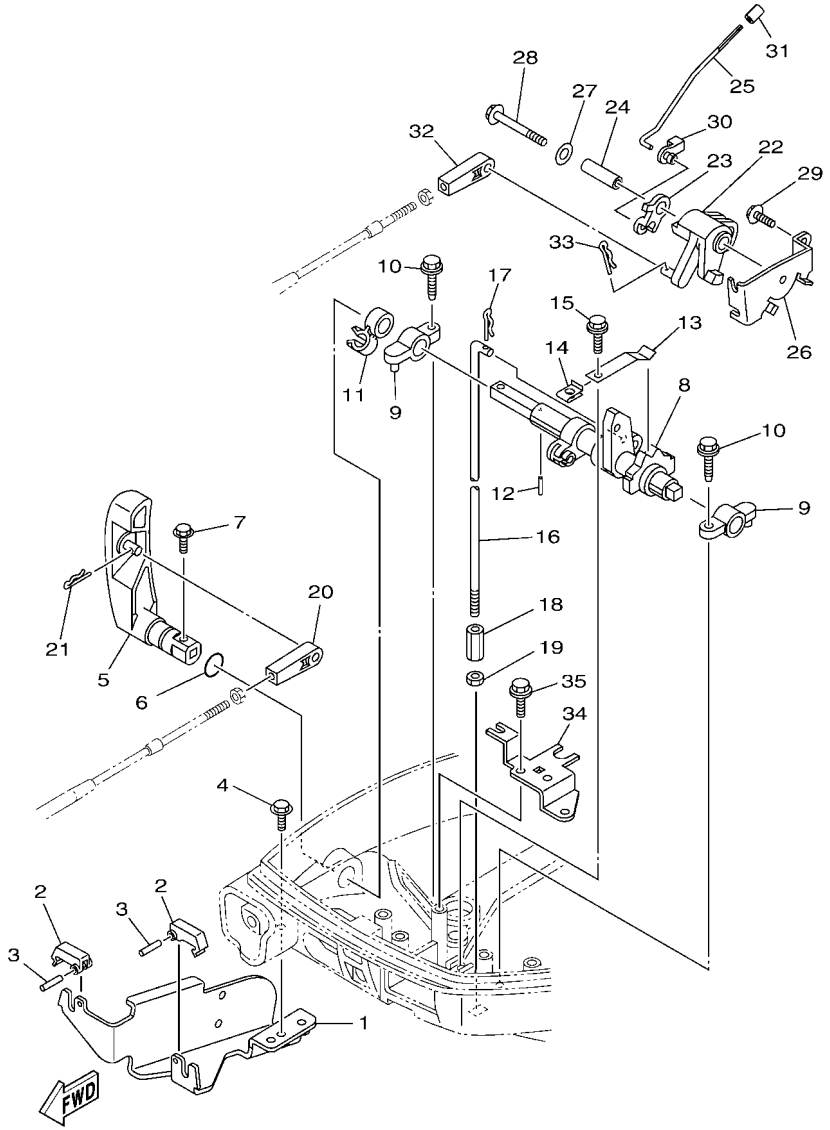

6MC1300-W180

FIG. 18 CONTROL 2 — COMMANDE 2

REF. NO.	PART NO. N° PIECES	DESCRIPTION DESCRIPTION	MH	M				REMARKS REMARQUES
1	6DR–48531–01	BRACKET, REMOTE CONTROL 1 ETRIER 1, COMMANDE A DISTANCE		1				
2	682–48538–50	CLAMP, CABLE 1 COLLIER		2				
3	91690–30012	PIN, SPRING AGRAFFE		2				
4	97E95–06512	BOLT, HEXAGON W/W DEEP RECESS VIS HEXAGONAL AVC RONDELLE		2				
5	6AU–44111–10	HANDLE, GEAR SHIFT POIGNEE, LEVIER D'EMBRAYAGE		1				
6	93210–12327	O-RING JOINT TORIQUE		1				
7	97595–05516	BOLT, WITH WASHER VIS HEXAGONAL AVC RONDELLE		1				
8	68T–44121–03	LEVER, SHIFT ROD LEVIER, TIGE D'INVERSION		1				
9	6G1–41662–01–94	BRACKET 2 SUPPORT 2		2				
10	90109–06M81	BOLT BOULON		2				
11	90464–10M60	CLAMP BRIDE		1				
12	91690–30014	PIN, SPRING AGRAFFE		1				
13	65W–44116–00	SPRING RESSORT		1				
14	6DR–44117–01	BRACKET SUPPORT		1				
15	90109–06M86	BOLT BOULON		1				
16	68T–44143–01	ROD, SHIFT 1 TIGE D'EMBRAYAGE 1		1				S(17.0") S(17.0")
	68T–44143–11	ROD, SHIFT 1 TIGE D'EMBRAYAGE 1		1				L(22.0") L(22.0")
17	90468–18001	CLIP JONC		1				
18	61N–44146–00	CONNECTOR, SHIFT ROD 2 CONNECTEUR, TIGE D'INVERSION 2		1				
19	95380–06700	NUT ECROU		1				
20	6FM–48344–00	CABLE END, REMOTE CONTROL CHAPE CABLE		1				
21	90468–18008	CLIP JONC		1				
22	68T–41638–00	PULLEY POULIE		1				
23	68T–41283–00	LEVER, FREE ACCEL. LEVIER		1				
24	90387–06M59	COLLAR COLLERETTE		1				
25	6AU–41211–00	LINK, ACCEL. BIELLETTE, ACCELERATION		1				
26	68T–14497–00	STAY, THROTTLE WIRE SUPPORT DE BOISSEAU		1				

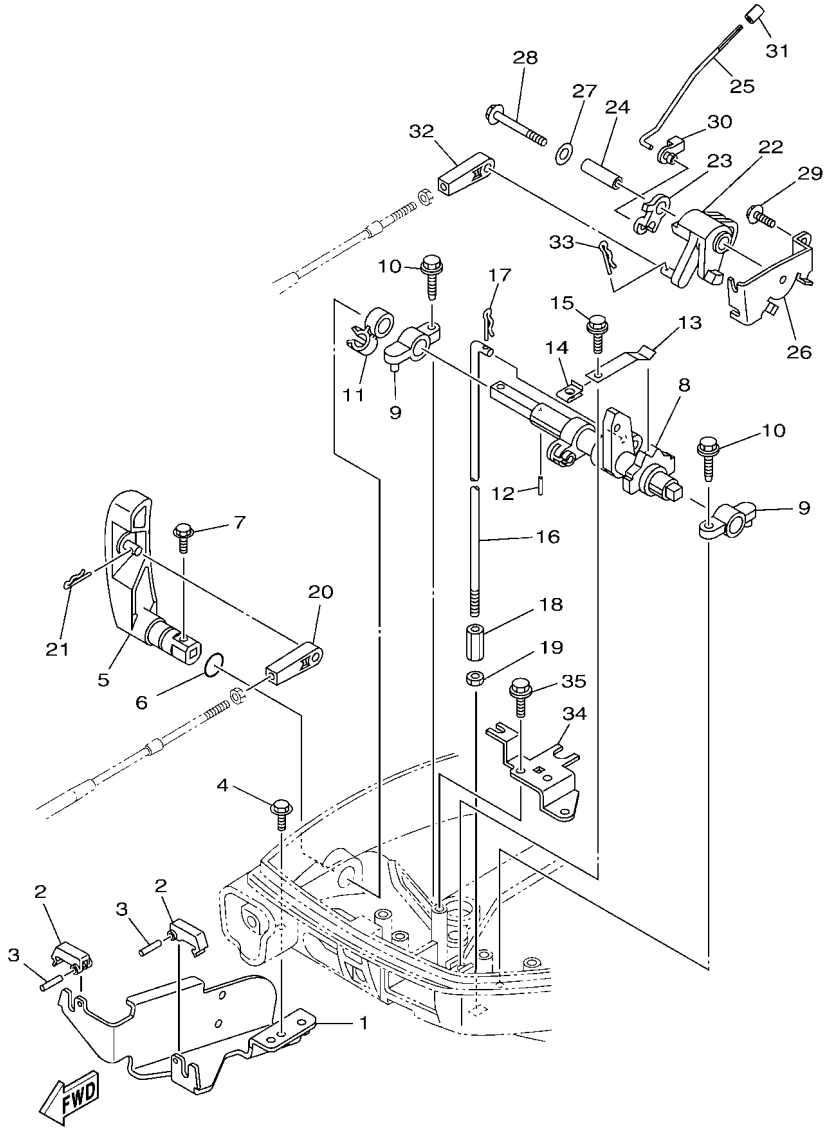

6MC1300-W180

FIG. 18 CONTROL 2 — COMMANDE 2

REF. NO.	PART NO. N° PIECES	DESCRIPTION DESCRIPTION	MH	M				REMARKS REMARQUES
27	92990–06200	WASHER, PLAIN RONDELLE, PLATE		1				
28	97E95–06545	BOLT, HEXAGON W/W DEEP RECESS VIS HEXAGONAL AVC RONDELLE		1				
29	97E95–06512	BOLT, HEXAGON W/W DEEP RECESS VIS HEXAGONAL AVC RONDELLE		1				
30	6J8–41262–00	JOINT, CHOKE LEVER RACCORD, LEVIER DE STARTER		1				
31	6FW–13448–00	CAP CAPUCHON		1				
32	6FM–48344–00	CABLE END, REMOTE CONTROL CHAPE CABLE		1				
33	90468–18008	CLIP JONC		1				
34	68T–15774–20	STAY 4 SUPPORT 4		1				
35	90109–06M86	BOLT BOULON		2				

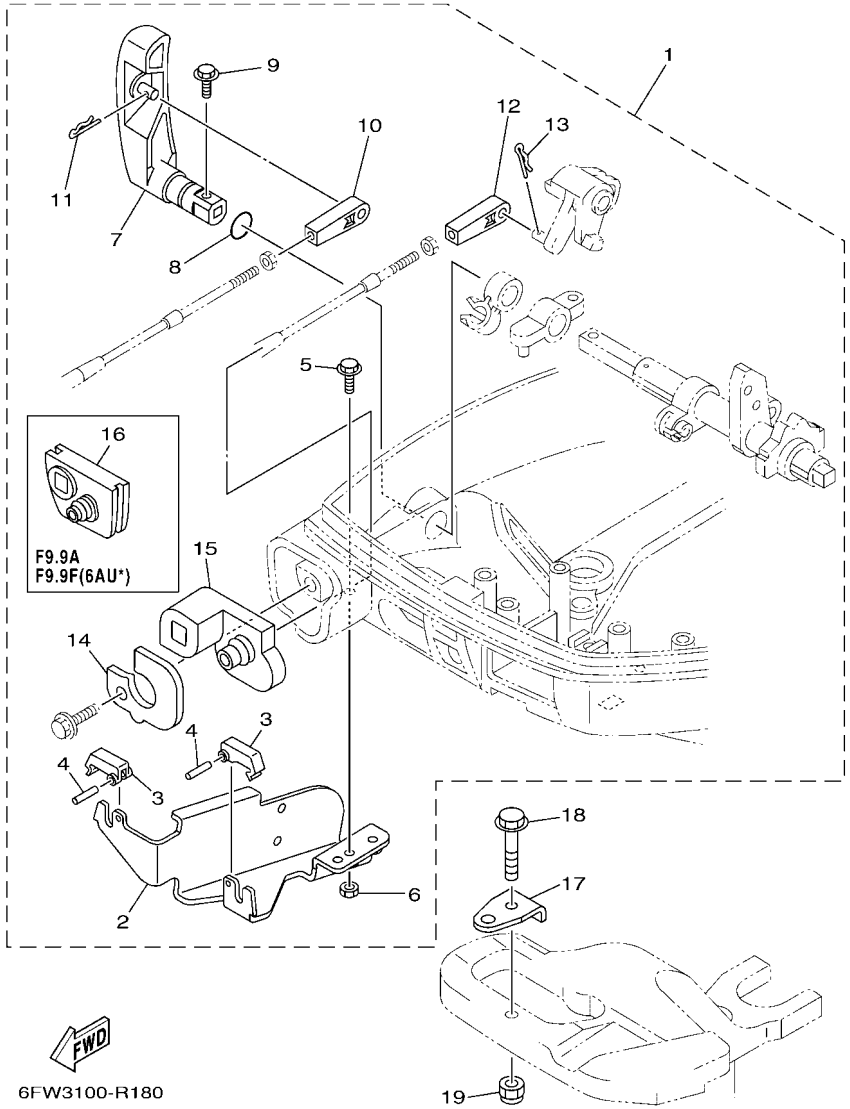

FIG. 19 REMO CON ATTACHMENT — COMMANDE A DISTANCE

REF. NO.	PART NO. N° PIECES	DESCRIPTION DESCRIPTION	MH	M				REMARKS REMARQUES
1	6DR–48501–03	REMOTE CONT. ATTACHMENT ASSY. COMMANDE A DISTANCE (KIT)	1					AP AP
2	68T–48531–01	.BRACKET, REMOTE CONTROL 1 .ETRIER 1, COMMANDE A DISTANCE	1					
3	682–48538–50	.CLAMP, CABLE 1 .COLLIER	2					
4	91690–30012	.PIN, SPRING .AGRAFFE	2					
5	97E95–06512	.BOLT, HEXAGON W/W DEEP RECESS .VIS HEXAGONAL AVC RONDELLE	2					
6	95380–06600	.NUT, HEXAGON .ECROU	2					
7	6AU–44111–10	.HANDLE, GEAR SHIFT .POIGNEE, LEVIER D'EMBRAYAGE	1					
8	93210–12327	.O-RING .JOINT TORIQUE	1					
9	97595–05516	.BOLT, WITH WASHER .VIS HEXAGONAL AVC RONDELLE	1					
10	6FM–48344–00	.CABLE END, REMOTE CONTROL .CHAPE CABLE	1					
11	90468–18008	.CLIP .JONC	1					
12	6FM–48344–00	.CABLE END, REMOTE CONTROL .CHAPE CABLE	1					
13	90468–18008	.CLIP .JONC	1					
14	6DR–42761–10	.STOPPER .PLAQUETTE	1					
15	6DR–42725–11	.GROMMET .PASSE-FIL	1					
16	68T–42725–11	.GROMMET .PASSE-FIL	1					
17	63V–48511–01	HOOK, STEERING ATTACHE, DIRECTION	1					AP AP
18	97E95–08535	BOLT, HEXAGON W/W DEEP RECESS VIS HEXAGONAL AVC RONDELLE	1					AP AP
19	90185–08057	NUT, SELF-LOCKING ECROU,AUTO-BLOQUANT	1					AP AP

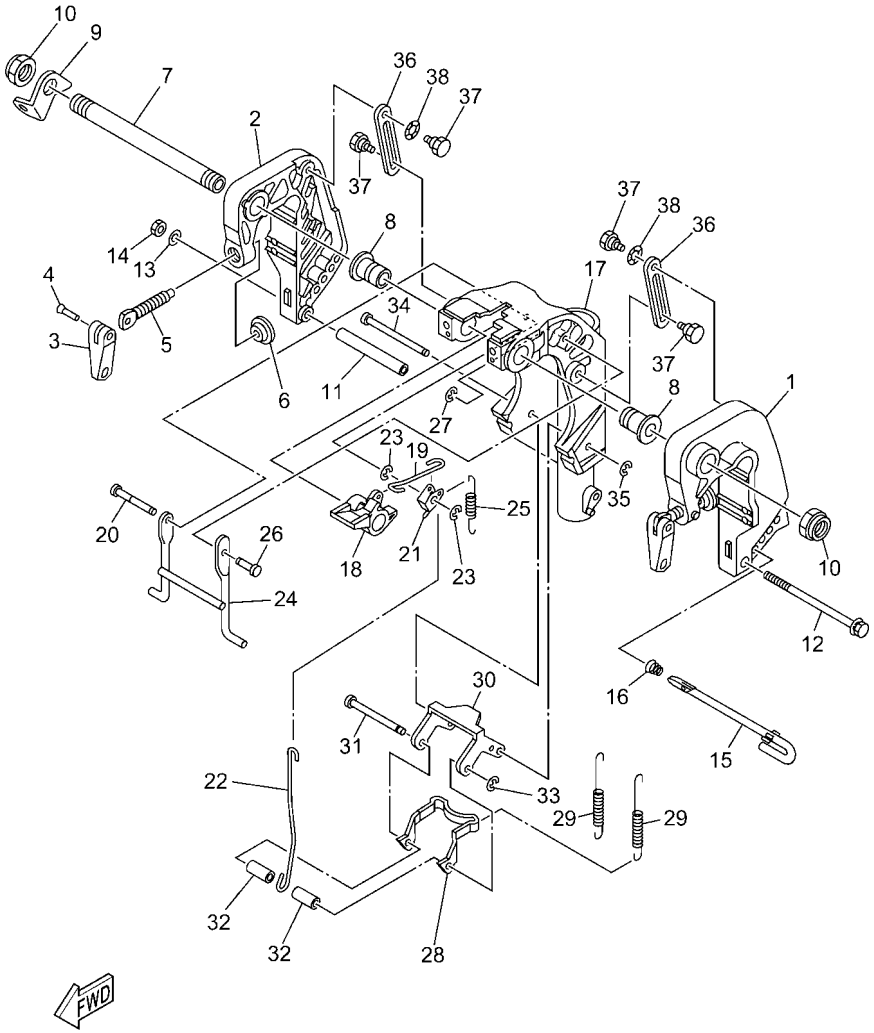

6DRC100-X190

FIG. 20 BRACKET 1 SUPPORT 1

REF. NO.	PART NO. N° PIECES	DESCRIPTION DESCRIPTION	MH	M				REMARKS REMARQUES
1	6AH–43111–00–8D	BRACKET, CLAMP 1 PRESSE 1	1	1				
2	6AH–43112–00–8D	BRACKET, CLAMP 2 PRESSE 2	1	1				
3	6E0–43118–01	HANDLE, TRANSOM CLAMP POIGNEE DE VIS DE PRESSE	2	2				
4	90243–04M01	PIN GOUPILLE	2	2				
5	6E7–43116–00	SCREW, TRANSOM CLAMP VIS DE PRESSE	2	2				
6	648–43114–01	PAD, TRANSOM CLAMP RONDELLE D'APPUI	2	2				
7	69A–43131–00	BOLT, CLAMP BRACKET BOULON, PRESSE	1	1				FOR RIDE GUIDE FOR RIDE GUIDE
8	90386–22MA4	BUSH DOUILLE	2	2				
9	66R–43113–00	PLATE, CLAMP BRACKET PLAQUETTE, PRESSE	1	1				
10	90185–22043	NUT, SELF-LOCKING ECROU,AUTO-BLOQUANT	2	2				
11	90387–06369	COLLAR COLLERETTE	1	1				
12	90101–06M18	BOLT BOULON	1	1				
13	92995–06600	WASHER RONDELLE	1	1				
14	95380–06700	NUT ECROU	1	1				
15	6L2–43160–01	TILT ROD ASSY BROCHE D'INCLINAISON (ENS.)	1	1				
16	90502–10M07	SPRING, CONICAL RESSORT, CONIQUE	1	1				
17	6AH–43311–00–8D	BRACKET, SWIVEL 1 SUPPORT, PIVOT 1	1	1				S(17.0") S(17.0")
	6AU–43311–10–8D	BRACKET, SWIVEL 1 SUPPORT, PIVOT 1	1	1				L(22.0") L(22.0")
18	6DR–43631–00	LEVER, TILT LEVIER, INCLINAISON	1	1				
19	6DR–43616–00	ROD, TILT LOCK TIGE	1	1				
20	68T–43646–00	SHAFT, LEVER AXE, LEIVER	1	1				
21	6DR–43641–00	LEVER, TILT LEVIER, INCLINAISON	1	1				
22	6AH–43617–00	ROD, TILT LOCK TIGE	1	1				
23	99080–05600	CIRCLIP CIRCLIP	2	2				
24	6AH–43350–00	RECEIVER ASSY RECEIVER ASSY	1	1				
25	90506–18014	SPRING, TENSION RESSORT, TENSION	1	1				S(17.0") S(17.0")
	90506–20025	SPRING, TENSION RESSORT, TENSION	1	1				L(22.0") L(22.0")

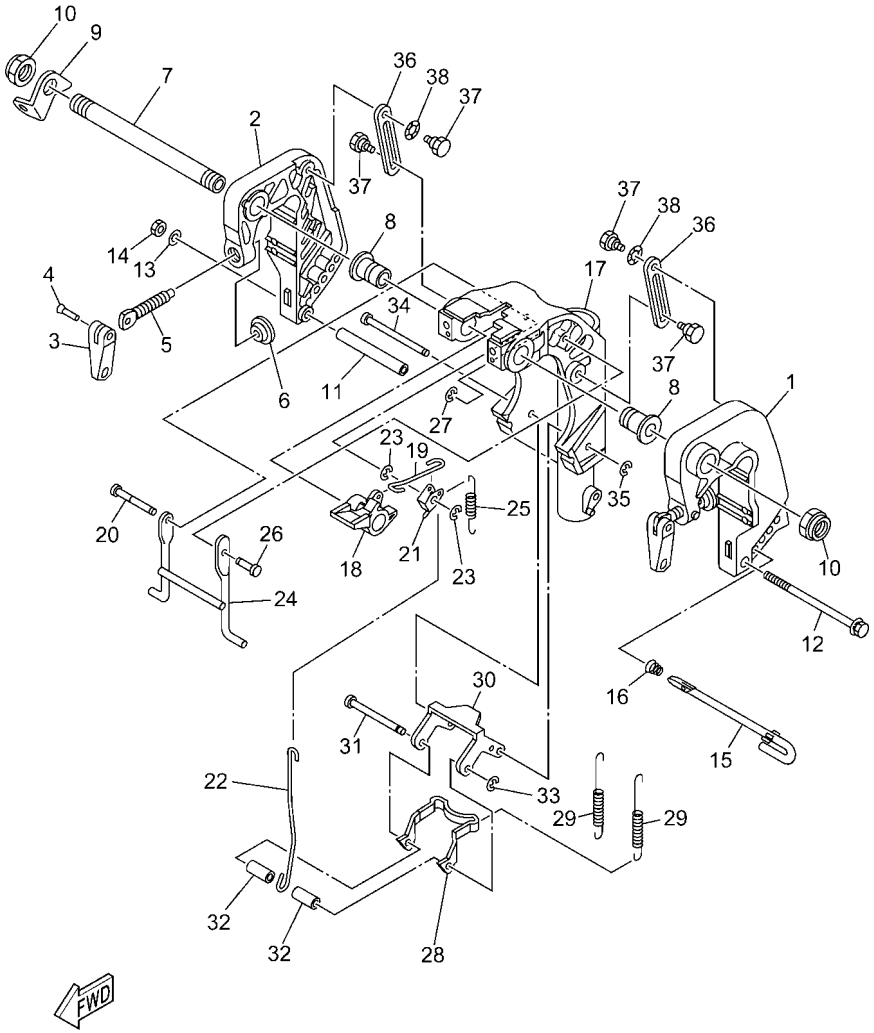

6DRC100-X190

FIG. 20 BRACKET 1 SUPPORT 1

REF. NO.	PART NO. N° PIECES	DESCRIPTION DESCRIPTION	MH	M				REMARKS REMARQUES
26	63V–43191–00	SHAFT, STOPPER AXE, BUTEE	1	1				
27	99080–05600	CIRCLIP CIRCLIP	1	1				
28	6AH–43614–00	PLATE, TILT LOCK ETRIER, VERROUILLAGE MARCHE AR	1	1				
29	90506–20020	SPRING, TENSION RESSORT, TENSION	2	2				S(17.0") S(17.0")
	90506–23016	SPRING, TENSION RESSORT, TENSION	2	2				L(22.0") L(22.0")
30	6AH–43615–00	PLATE, TILT LOCK ETRIER, VERROUILLAGE MARCHE AR	1	1				
31	68T–43611–00	SHAFT, TILT LOCK AXE, VERROUILLAGE MARCHE AR	1	1				
32	90387–06138	COLLAR COLLERETTE	2	2				
33	93430–04M03	CIRCLIP CLIPS	1	1				
34	68T–43659–00	SHAFT, REVERSE LOCK AXE, VERROUILLAGE MARCHE AR	1	1				
35	99080–05600	CIRCLIP CIRCLIP	1	1				
36	6AH–43627–00	STOPPER PLAQUETTE	2	2				
37	90109–06M84	BOLT BOULON	4	4				
38	90206–10M24	WASHER, WAVE RONDELLE, ONDULEE	2	2				

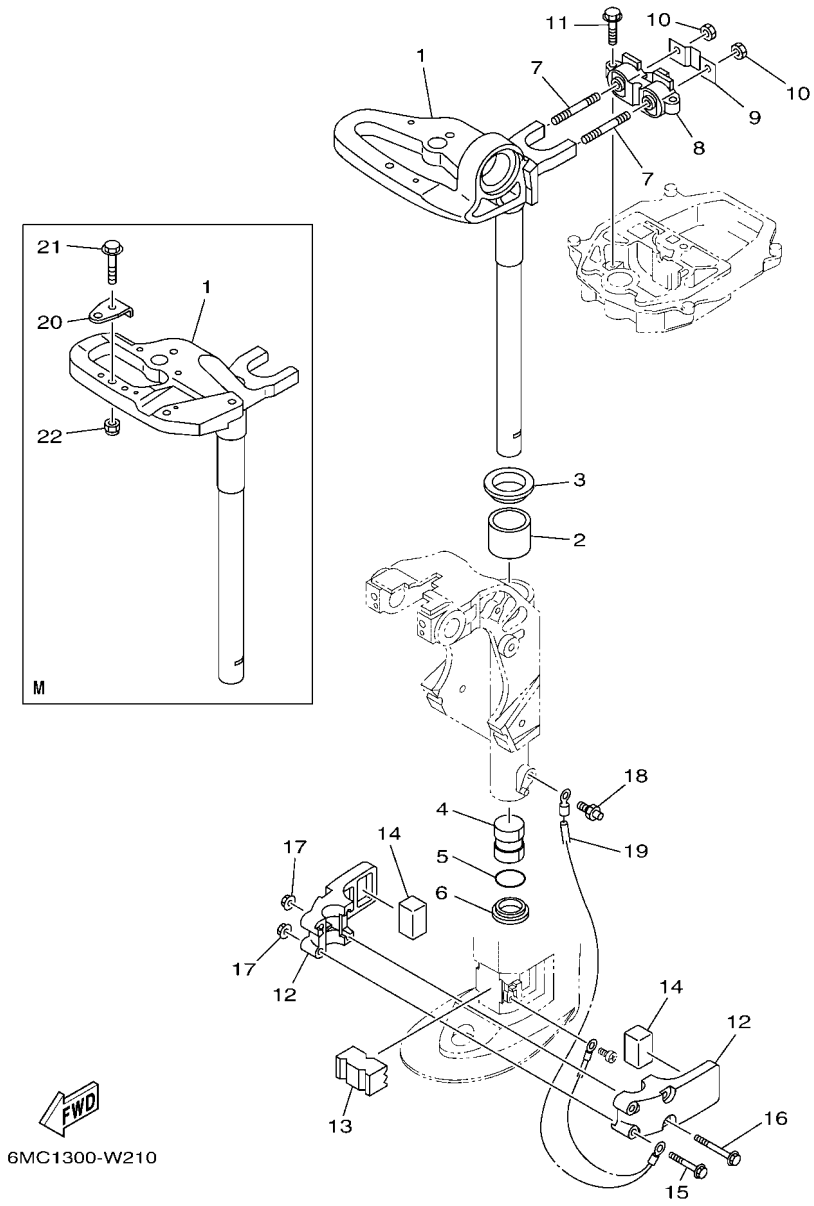

FIG. 21 BRACKET 2 — SUPPORT 2

REF. NO.	PART NO. N° PIECES	DESCRIPTION DESCRIPTION	MH	M				REMARKS REMARQUES
1	6DR–42511–00–8D	BRACKET, STEERING CADRE, DIRECTION	1					S(17.0") S(17.0")
	6DR–42511–10–8D	BRACKET, STEERING CADRE, DIRECTION	1					L(22.0") L(22.0")
	6AU–42511–00–8D	BRACKET, STEERING CADRE, DIRECTION		1				S(17.0") S(17.0")
	6AU–42511–10–8D	BRACKET, STEERING CADRE, DIRECTION		1				L(22.0") L(22.0")
2	90386–40001	BUSH DOUILLE	1	1				
3	90209–40008	WASHER RONDELLE	1	1				
4	90386–30048	BUSH DOUILLE	1	1				
5	93210–29M94	O-RING JOINT TORIQUE	1	1				
6	90386–30M60	BUSH DOUILLE	1	1				
7	90116–08M54	BOLT, STUD GOUJON	2	2				
8	68T–44517–00	MOUNT RUBBER SILENT-BLOC	1	1				
9	68T–44526–00	PLATE PLAQUE	1	1				
10	95380–08600	NUT ECROU	2	2				
11	97E75–06525	BOLT, HEXAGON W/W DEEP RECESS VIS HEXAGONAL AVC RONDELLE	2	2				
12	6AU–44551–00–8D	HOUSING, LOWER MOUNT RUBBER 1 BOITIER, SILENT-BLOC INFERIEUR	2	2				
13	6AU–44557–01	MOUNT DAMPER, LOWER FRONT SILENT-BLOC, INFERIEUR AVANT	1	1				
14	682–44555–30	MOUNT DAMPER, LOWER SIDE SILENT-BLOC, INFERIEUR LATERAL	2	2				
15	90119–06012	BOLT, WITH WASHER BOULON, AVEC RONDELLE	2	2				
16	90119–06198	BOLT, WITH WASHER BOULON, AVEC RONDELLE	2	2				
17	90179–06M28	NUT ECROU	4	4				
18	93700–06004	NIPPLE, GREASE PION	1	1				
19	68T–82127–00	WIRE, LEAD 2 FIL 2	1	1				
20	63V–48511–01	HOOK, STEERING ATTACHE, DIRECTION		1				
21	97E95–08535	BOLT, HEXAGON W/W DEEP RECESS VIS HEXAGONAL AVC RONDELLE		1				
22	90185–08057	NUT, SELF-LOCKING ECROU,AUTO-BLOQUANT		1				

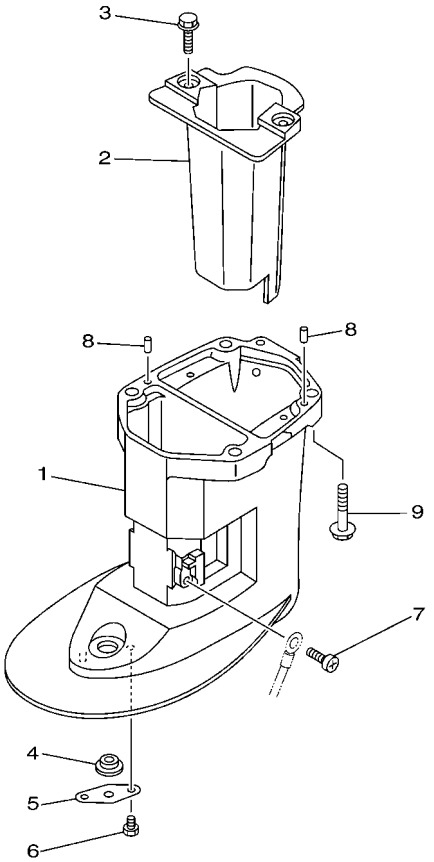

6AU4110-K250

FIG. 22 UPPER CASING FOURREAU

REF. NO.	PART NO. N° PIECES	DESCRIPTION DESCRIPTION	MH	M				REMARKS REMARQUES
1	6AU–45111–00–8D	CASING, UPPER FOURREAU	1	1				S(17.0") S(17.0")
	6AU–45111–10–8D	CASING, UPPER FOURREAU	1	1				L(22.0") L(22.0")
2	6AU–14711–00–CA	MUFFLER 1 POT D'ECHAPPEMENT 1	1	1				
3	97E75–06514	BOLT, HEXAGON W/W DEEP RECESS VIS HEXAGONAL AVC RONDELLE	2	2				
4	90480–14M54	GROMMET PASSE-FIL	1	1				
5	68T–45321–00	PLATE PLAQUETTE	1	1				
6	97D95–06008	BOLT, HEXAGON DEEP RECESS VIS HEXAGONAL	1	1				
7	97885–05008	SCREW, PAN HEAD VIS, A ENCOCHE	1	1				
8	93604–12M07	PIN, DOWEL CLAVETTE	2	2				
9	97E95–08535	BOLT, HEXAGON W/W DEEP RECESS VIS HEXAGONAL AVC RONDELLE	4	4				

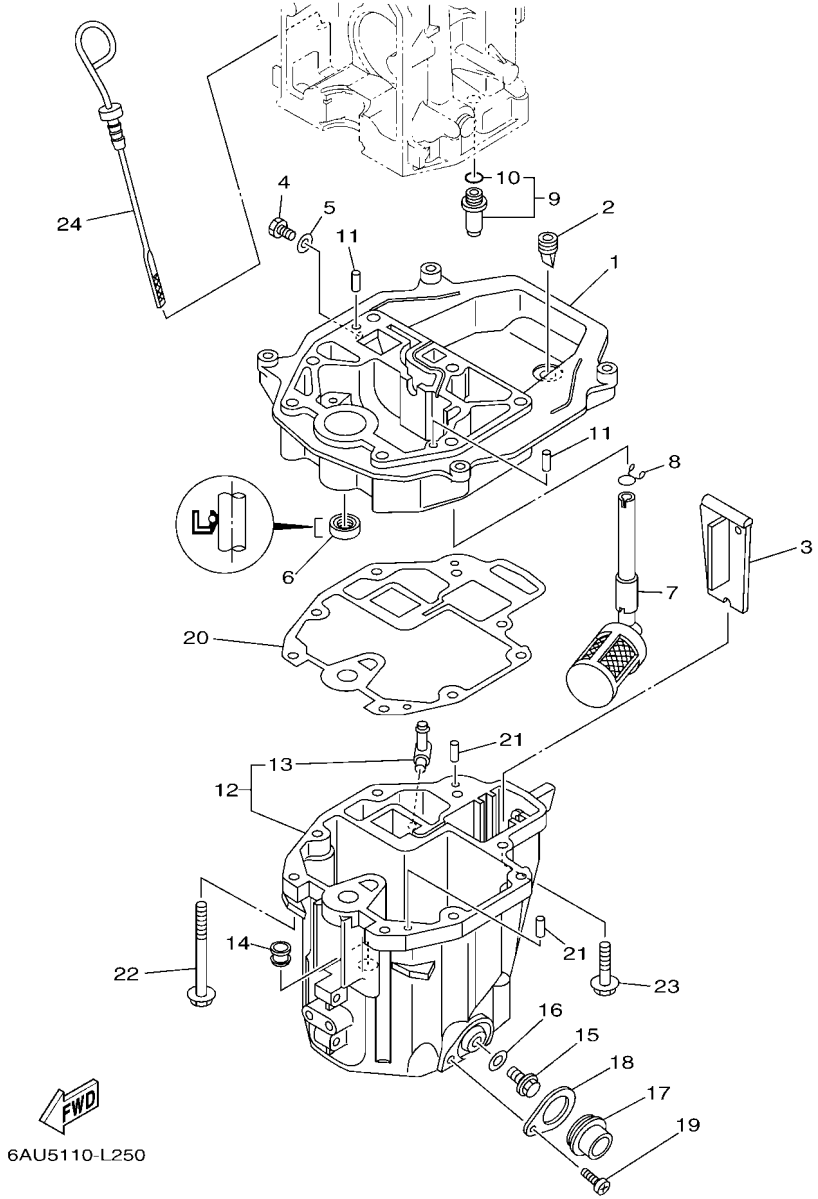

FIG. 23 OIL PAN — VENTILATEUR D'HUILE

REF. NO.	PART NO. N° PIECES	DESCRIPTION DESCRIPTION	MH	M				REMARKS REMARQUES
1	68T–41137–00–CA	GUIDE, EXHAUST COLLECTEUR D'ECHAPPEMENT	1	1				
2	65W–42717–00	RUBBER, SEAL 2 JOINT EN CAOUTCHOUC 2	1	1				
3	68T–45181–00	PLATE PLAQUETTE	1	1				
4	97D95–08014	BOLT, HEXAGON DEEP RECESS VIS HEXAGONAL	1	1				
5	90430–08143	GASKET JOINT	1	1				
6	93101–12M70	OIL SEAL JOINT SPY	1	1				
7	68T–13421–01	STRAINER 2 FILTRE 2	1	1				
8	90467–11M08	CLIP JONC	1	1				
9	6G8–11575–00	RELIEF VALVE ASSY SOUPAPE DE RENTREE D'AIR	1	1				
10	93210–12M62	.O-RING .JOINT TORIQUE	1	1				
11	93606–19M23	PIN, DOWEL GOUPILLE	2	2				
12	68T–15311–01–CA	OIL PAN VENTILATEUR D'HUILE	1	1				
13	6H1–11372–00	.NIPPLE, HOSE .RACCORD, TUYAU	1	1				
14	90480–10M28	GROMMET PASSE-FIL	1	1				
15	90340–10M10	PLUG, STRAIGHT SCREW PLOT, FILETE DROIT	1	1				
16	90430–10M11	GASKET JOINT	1	1				
17	68T–15316–00	DAMPER 1 AMORTISSEUR 1	1	1				
18	68T–15317–00	SPACER, ENGINE MOUNT ENTRETOISE DE SUPPORT	1	1				
19	97885–05008	SCREW, PAN HEAD VIS, A ENCOCHE	1	1				
20	68T–13475–00	GASKET JOINT	1	1				
21	93604–12M07	PIN, DOWEL CLAVETTE	2	2				
22	90119–08201	BOLT, WITH WASHER BOULON, AVEC RONDELLE	6	6				
23	97E95–08530	BOLT, HEXAGON W/W DEEP RECESS VIS HEXAGONAL AVC RONDELLE	2	2				
24	68T–15362–00	PLUG, OIL LEVEL PLOT, NIVEAU D'HUILE	1	1				

FIG. 24 LOWER CASING & DRIVE 1 — BOITIER D'HELICE TRANSMISSION1

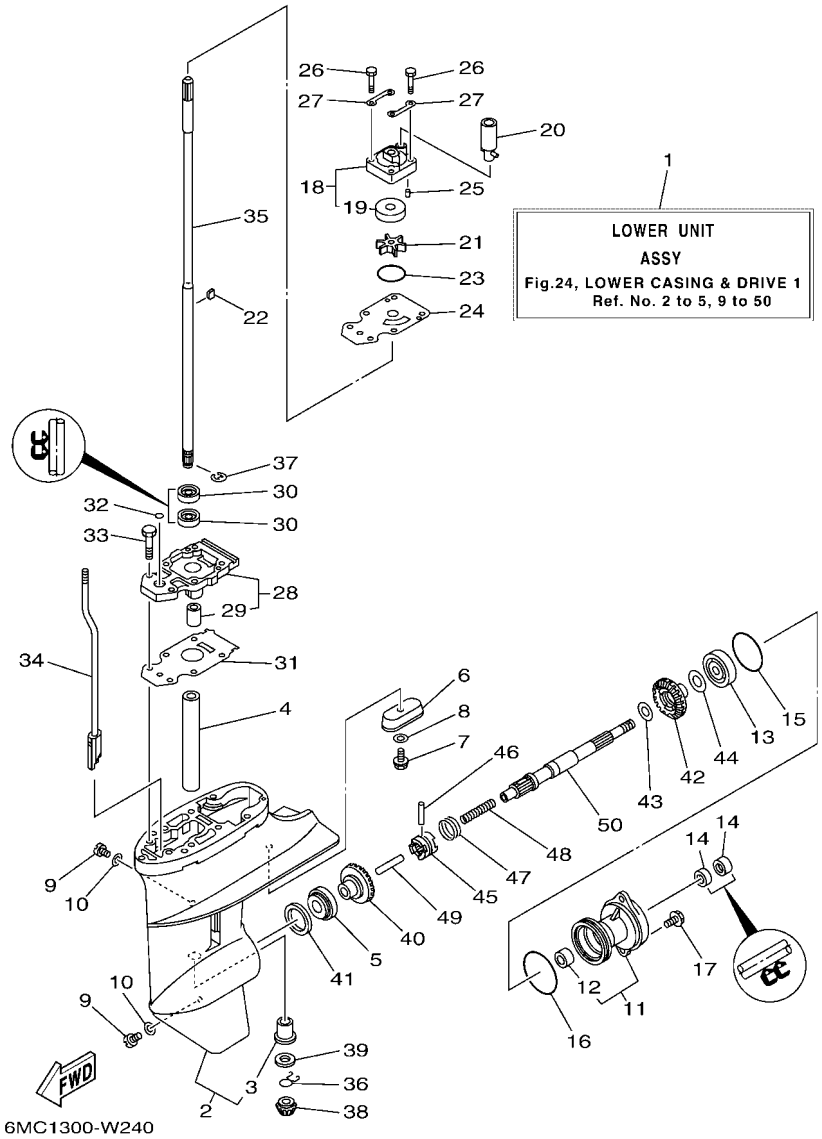

REF. NO.	PART NO. N° PIECES	DESCRIPTION DESCRIPTION	MH	M				REMARKS REMARQUES
1	6AU–45300–05–8D	LOWER UNIT ASSY UNITE INFERIEURE (ENS.)	1	1				S(17.0") S(17.0")
	6AU–45300–15–8D	LOWER UNIT ASSY UNITE INFERIEURE (ENS.)	1	1				L(22.0") L(22.0")
2	6AU–45311–01–8D	CASING, LOWER BOITIER D'HELICE	1	1				
3	6G1–45317–09	.BUSHING, DRIVE SHAFT .DOUILLE, ARBRE MOTEUR	1	1				
4	90387–14M49	COLLAR COLLERETTE	1	1				
5	93306–004U0	BEARING ROULEMENT	1	1				
6	68T–45251–00	ANODE ANODE	1	1				
7	95D95–06016	BOLT, FLANGE DEEP RECESS BOULON FIXATION	1	1				
8	92990–06300	WASHER, INTERNAL TOOTH RONDELLE, DENTURE INTERNE	1	1				
9	90340–08002	PLUG, STRAIGHT SCREW PLOT, FILETE DROIT	2	2				
10	90430–08003	GASKET JOINT	2	2				
11	6G1–45361–01–8D	CAP, LOWER CASING COUVERCLE, BOITIER D'HELICE	1	1				
12	6G1–45362–09	.BUSHING .COUSSINET	1	1				
13	93306–004U0	BEARING ROULEMENT	1	1				
14	93101–15074	OIL SEAL JOINT SPY	2	2				
15	93210–49046	O-RING JOINT TORIQUE	1	1				
16	93210–53M08	O-RING JOINT TORIQUE	1	1				
17	97E95–06516	BOLT, HEXAGON W/W DEEP RECESS VIS HEXAGONAL AVC RONDELLE	2	2				
18	63V–44301–00	WATER PUMP HOUSING COMP. CARTER, POMPE A EAU (ENS)	1	1				
19	63V–44322–00	.INSERT, CARTRIDGE .CUVETTE	1	1				
20	68T–44366–01	DAMPER, WATER SEAL 2 JOINT, TUBE D'EAU 2	1	1				
21	68T–44352–00	IMPELLER TURBINE	1	1				
22	664–44338–00	KEY, WOODRUFF CLAVETTE, VOLANT	1	1				
23	93210–44398	O-RING JOINT TORIQUE	1	1				
24	68T–44323–00	OUTER PLATE, CARTRIDGE PLAQUE EXTERIEURE	1	1				
25	93604–12M07	PIN, DOWEL CLAVETTE	2	2				
26	97D95–08045	BOLT, HEXAGON DEEP RECESS VIS HEXAGONAL	4	4				

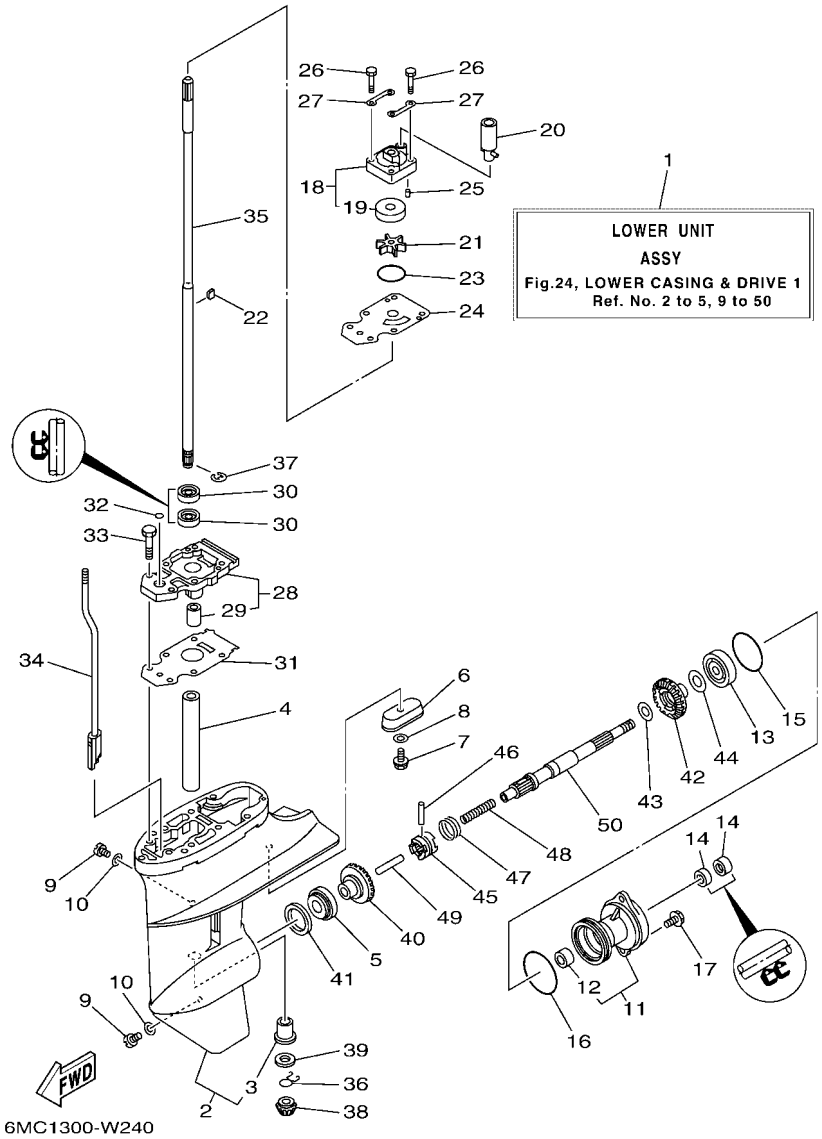

FIG. 24 LOWER CASING & DRIVE 1 — BOITIER D'HELICE TRANSMISSION1

REF. NO.	PART NO. N° PIECES	DESCRIPTION DESCRIPTION	MH	M				REMARKS REMARQUES
27	63V–44328–01	PLATE PLAQUETTE	2	2				
28	68T–45331–01–CA	HOUSING, BEARING FLASQUE, ROULEMENT	1	1				
29	6G1–45316–09	.BUSHING, DRIVE SHAFT .DOUILLE, ARBRE MOTEUR	1	1				
30	93101–11M23	OIL SEAL JOINT SPY	2	2				
31	68T–45315–A0	PACKING, LOWER CASING JOINT, BOITIER D'HELICE	1	1				
32	93210–06ME6	O-RING JOINT TORIQUE	1	1				
33	97080–08025	BOLT BOULON	2	2				
34	68T–44150–01	SHIFT CAM ASSY CAME D'INVERSION	1	1				
35	6AU–45511–00	SHAFT, DRIVE ARBRE, MOTEUR	1	1				S(17.0") S(17.0")
	6AU–45511–10	SHAFT, DRIVE ARBRE, MOTEUR	1	1				L(22.0") L(22.0")
36	90467–09M05	CLIP JONC	1	1				
37	99001–07600	CIRCLIP CIRCLIP	1	1				
38	68T–45551–00	PINION (13T) PIGNON D'ATTAQUE (13D)	1	1				
39	6G1–45533–00	SHIM (T:1.90MM) CALE (T:1.90MM)	1	1				UR UR
	6G1–45533–10	SHIM (T:2.00MM) CALE (T:2.00MM)	1	1				UR UR
	6G1–45533–20	SHIM (T:2.10MM) CALE (T:2.10MM)	1	1				UR UR
	6G1–45533–30	SHIM (T:2.20MM) CALE (T:2.20MM)	1	1				UR UR
40	68T–45560–00	GEAR 1 (27T) PIGNON 1 (27T)	1	1				
41	664–45587–01	SHIM (T:0.10MM) CALE (T:0.10MM)	1	1				UR UR
	664–45587–10	SHIM (T:0.12MM) CALE (T:0.12MM)	1	1				UR UR
	664–45587–20	SHIM (T:0.15MM) CALE (T:0.15MM)	1	1				UR UR
	664–45587–30	SHIM (T:0.18MM) CALE (T:0.18MM)	1	1				UR UR
	664–45587–40	SHIM (T:0.30MM) CALE (T:0.30MM)	1	1				UR UR
	664–45587–50	SHIM (T:0.40MM) CALE (T:0.40MM)	1	1				UR UR
	664–45587–60	SHIM (T:0.50MM) CALE (T:0.50MM)	1	1				UR UR
42	68T–45571–00	GEAR 2 (27T) PIGNON 2 (27T)	1	1				
43	90201–15M89	WASHER, PLATE RONDELLE, PLATE	1	1				

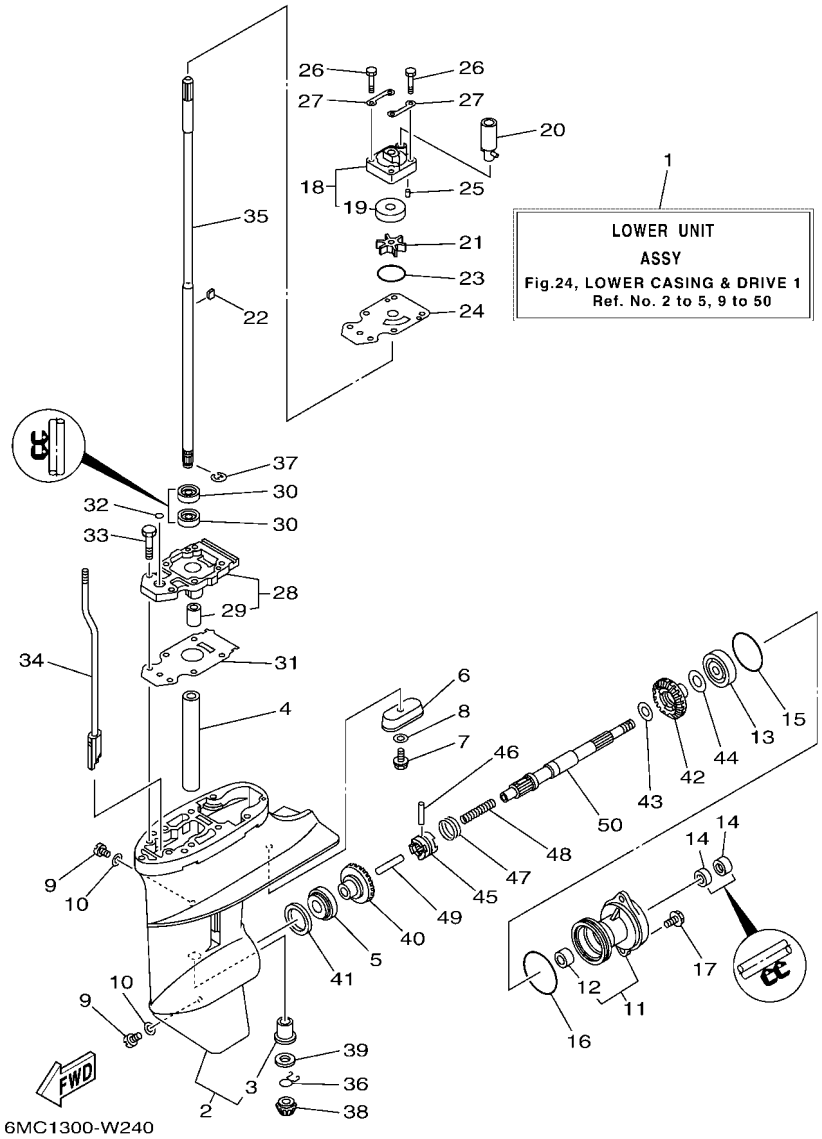

FIG. 24 LOWER CASING & DRIVE 1 — BOITIER D'HELICE TRANSMISSION1

REF. NO.	PART NO. N° PIECES	DESCRIPTION DESCRIPTION	MH	M				REMARKS REMARQUES
44	647–45567–00	SHIM (T:0.10MM) CALE (T:0.10MM)	1	1				UN UN
45	68T–45631–00	CLUTCH, DOG CRABOT	1	1				
46	6G1–45632–00	PIN, CROSS GOUPILLE DE CRABOT	1	1				
47	654–45633–00	RING, CROSS PIN JONC, GOUPILLE CRABOT	1	1				
48	90501–140A1	SPRING, COMPRESSION RESSORT, COMPRESSION	1	1				
49	6G1–45635–00	PLUNGER, SHIFT POUSSOIR D'EMBRAYAGE	1	1				
50	68T–45611–00	SHAFT, PROPELLER ARBRE, HELICE	1	1				

FIG. 25 LOWER CASING & DRIVE 2 — BOITIER D'HELICE TRANSMISSION2

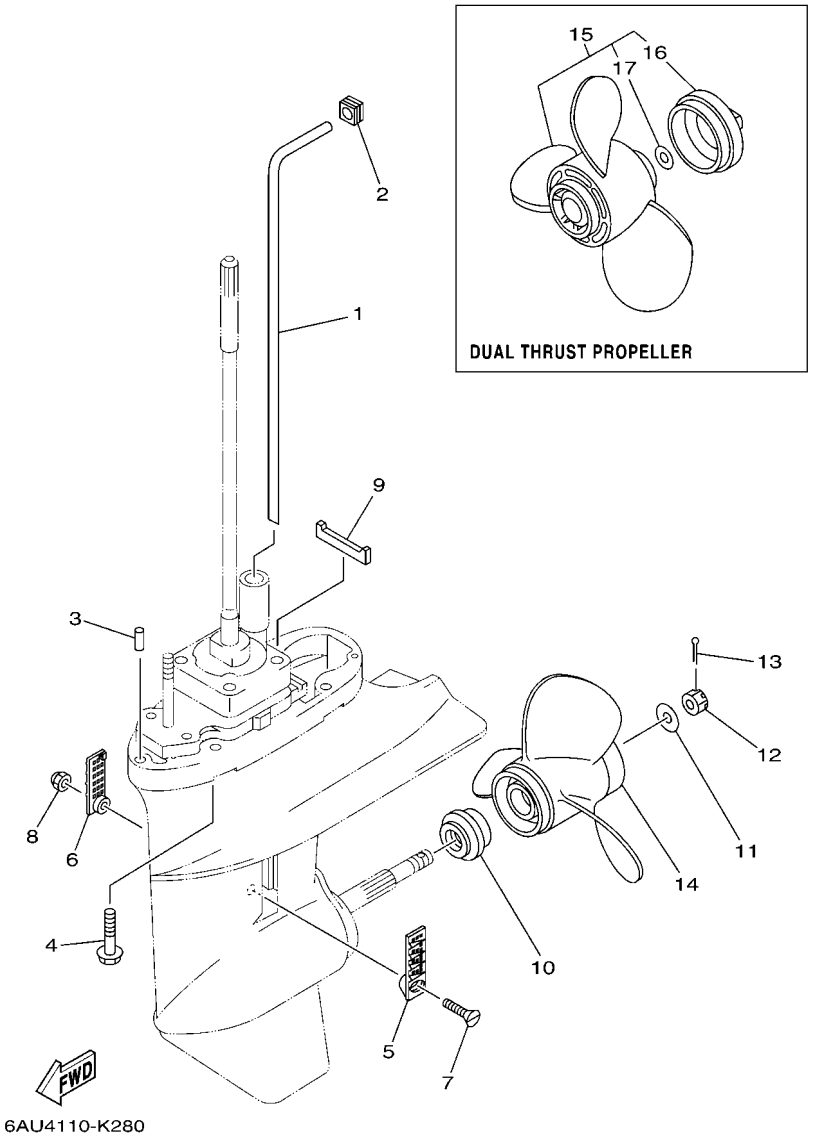

REF. NO.	PART NO. N° PIECES	DESCRIPTION DESCRIPTION	MH	M				REMARKS REMARQUES
1	68T–44361–00	TUBE, WATER 1 TUBE D'EAU 1	1	1				S(17.0") S(17.0")
	68T–44361–10	TUBE, WATER 1 TUBE D'EAU 1	1	1				L(22.0") L(22.0")
2	63V–44365–11	DAMPER, WATER SEAL 1 JOINT, TUBE D'EAU 1	1	1				
3	93604–12M07	PIN, DOWEL CLAVETTE	2	2				
4	97E95–08535	BOLT, HEXAGON W/W DEEP RECESS VIS HEXAGONAL AVC RONDELLE	4	4				
5	6G1–45214–00	COVER, WATER INLET 1 GRILLE, ENTREE D'EAU 1	1	1				
6	6G1–45215–00	COVER, WATER INLET 2 GRILLE, ENTREE D'EAU 2	1	1				
7	90152–05M03	SCREW, COUNTERSUNK VIS, TETE NOYEE	1	1				
8	90185–05002	NUT, NYLON ECROU,AUTO-BLOQUANT	1	1				
9	63V–45375–00	DAMPER, SEAL BOURRELET, CAOUTCHOUC	1	1				
10	6G1–45987–02	SPACER 1 ENTRETOISE 1	1	1				
11	90201–10M01	WASHER, PLATE RONDELLE, PLATE	1	1				
12	90171–10M01	NUT, CASTLE ECROU, CRENELE	1	1				
13	91490–30025	PIN. COTTER GOUPILLE	1	1				
14	6G1–45947–00	PROPELLER (3X8-1/2"X6-1/2"-N) HELICE (3X8-1/2"X6-1/2"-N)	1	1				UR UR
	6G1–45943–00	PROPELLER (3X8-1/2"X7-1/2"-N) HELICE (3X8-1/2"X7-1/2"-N)	1	1				UR UR
	6G1–45952–00	PROPELLER (3X8-1/2"X8"-N) HELICE (3X8-1/2"X8"-N)	1	1				UR UR
	6G1–45941–00	PROPELLER (3X8-1/2"X8-1/2"-N) HELICE (3X8-1/2"X8-1/2"-N)	1	1				UR UR
	6G1–45954–00	PROPELLER (3X8-1/2"X9-1/4"-N) HELICE (3X8-1/2"X9-1/4"-N)	1	1				UR UR
15	6G1–W4592–00	PROPELLER (3X9"X5"-N) HELICE (3X9"X5"-N)	1	1				UR UR
	6G1–W4591–01	PROPELLER (3X9"X7"-N) HELICE (3X9"X7"-N)	1	1				UR UR
16	6G1–45616–01	.NUT, PROPELLER .CONE, HELICE	1	1				
17	90201–10M02	.WASHER, PLATE .RONDELLE, PLATE	1	1				

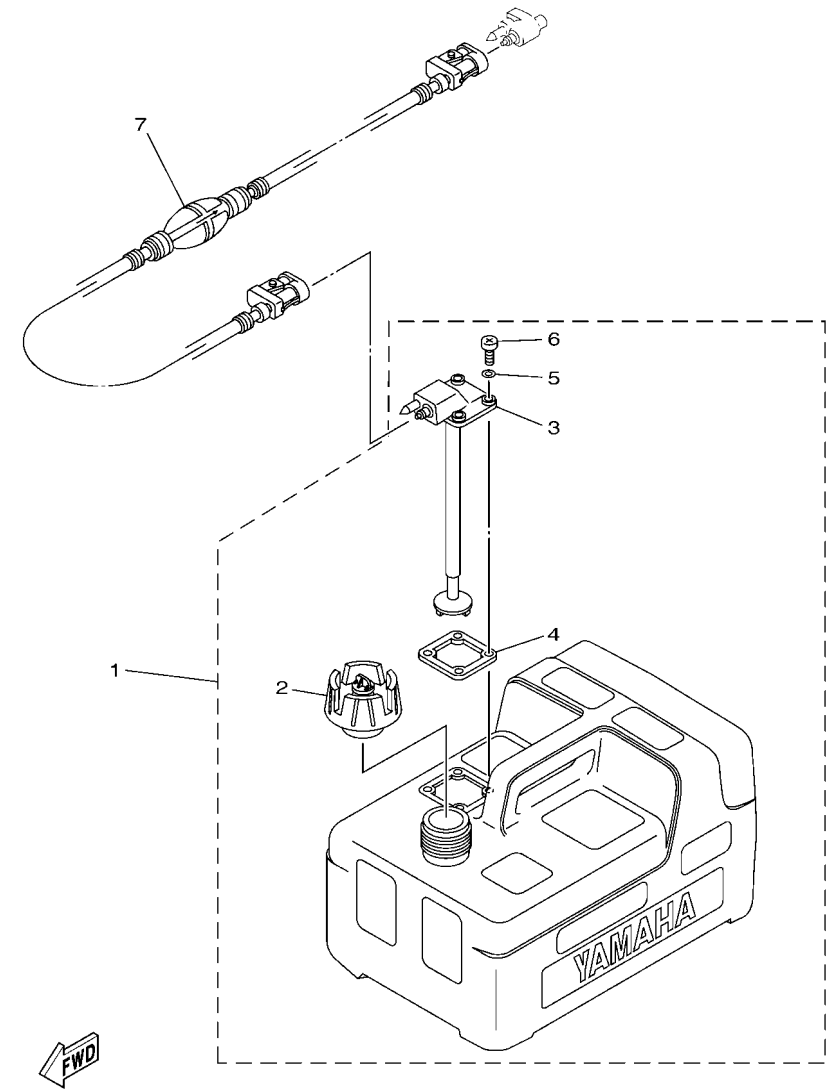

FIG. 26 FUEL TANK — RESERVOIR A CARBURANT

REF. NO.	PART NO. N° PIECES	DESCRIPTION DESCRIPTION	MH	M				REMARKS REMARQUES
1	6YL–24201–07	FUEL TANK ASSY (12L) RESERVOIR A ESSENCE (ENS.) 12L	1	1				AP AP
2	6YK–24610–10	.CAP ASSY .BOUCHON	1	1				WITHOUT INDICATOR WITHOUT INDICATOR
3	6YL–24260–10	.FUEL METER ASSY .INDICATEUR DE CARBURANT	1	1				
4	6YL–24268–01	.GASKET, FUEL METER .JOINT, JAUGE A CARBURANT	1	1				
5	6YL–24329–00	.SEAL .JOINT	4	4				
6	90157–05M16	.SCREW, PAN HEAD .VIS, TETE TRONCONIQUE	4	4				
7	6YL–24306–54	FUEL PIPE COMP. 1 DURITE A ESSENCE 1	1	1				AP AP

FIG. 27 STEERING GUIDE — FIXATION DE DIRECTION

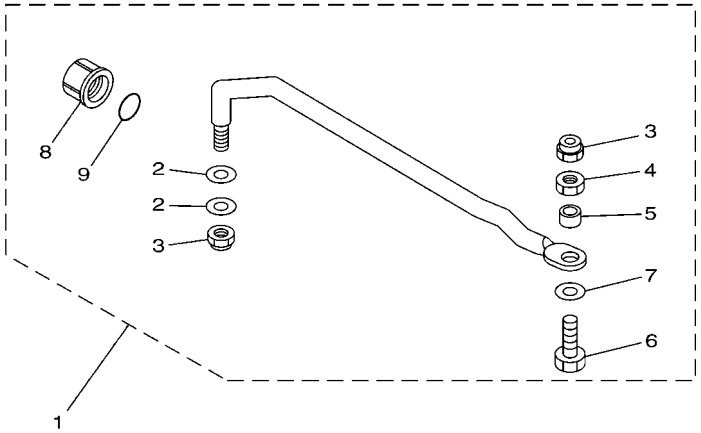

6AU1100-G300

REF. NO.	PART NO. N° PIECES	DESCRIPTION DESCRIPTION	MH	M				REMARKS REMARQUES
1	68T–61350–10	STEERING GUIDE ATTACHMENT KIT FIXATIONS DE DIRECTION	1	1				AP AP
2	90201–10M20	.WASHER, PLATE .RONDELLE, PLATE	2	2				
3	90185–09M01	.NUT, SELF-LOCKING .ECROU,AUTO-BLOQUANT	2	2				
4	90170–09M03	.NUT .ECROU	1	1				
5	90387–10M42	.COLLAR .COLLERETTE	1	1				
6	6E5–61355–00	.BOLT .BOULON	1	1				
7	90201–10081	.WASHER, PLATE .RONDELLE, PLATE	1	1				
8	6E5–43145–01	.CAP, CLAMP BRACKET .CAPUCHON, PRESSE	1	1				
9	93210–16275	.O-RING .JOINT TORIQUE	1	1				

FIG. 28 REMOTE CONTROL BOX — BOITIER DE COMMANDE A DISTANCE

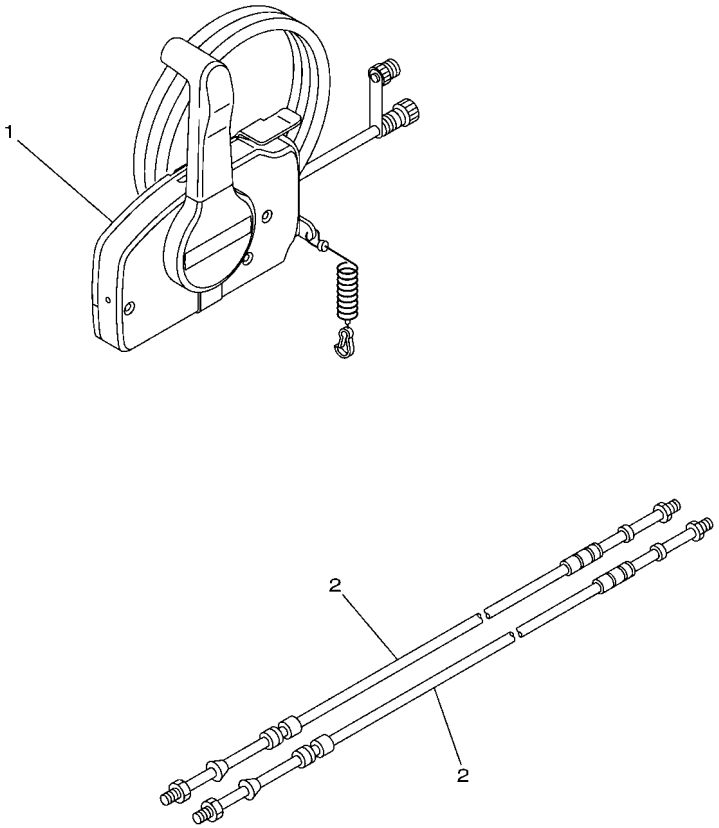

6MC1300-W280

REF. NO.	PART NO. N° PIECES	DESCRIPTION DESCRIPTION	MH	M				REMARKS REMARQUES
1	703–48206–23	REMOTE CONTROL ASSY MONO LEVIER GAUCHE AVEC TRIM		1				AP WITHOUT PT/T SW. AP WITHOUT PT/T SW.
2	701–48310–80	CABLE, REMOTE CONTROL L=10F CABLE, COMMANDE A DISTANCE:10F		2				UR UR
	701–48310–90	CABLE, REMOTE CONTROL L=11F CABLE, COMMANDE A DISTANCE:11F		2				UR UR
	701–48320–00	CABLE, REMOTE CONTROL L=12F CABLE, COMMANDE A DISTANCE:12F		2				UR UR

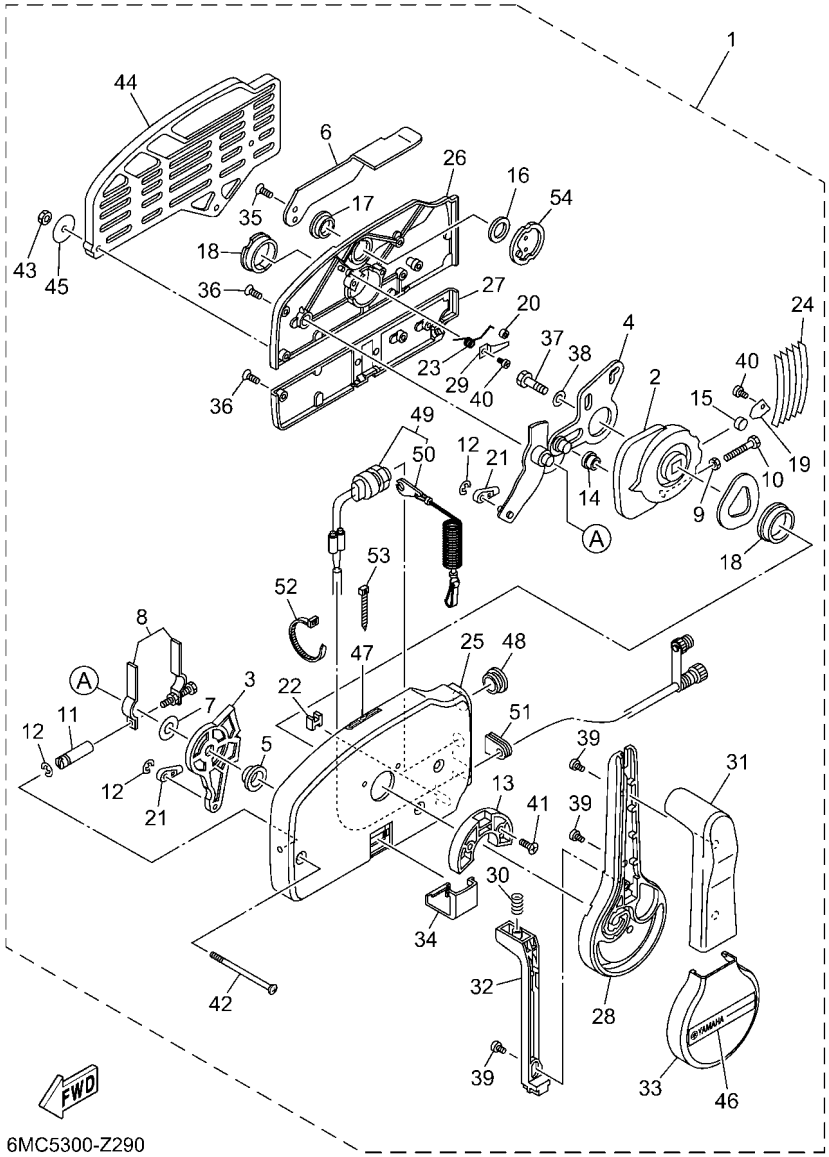

6MC5300-Z290

FIG. 29 REMOTE CONTROL ASSY — BOITIER DE COMMANDE A DISTANCE

REF. NO.	PART NO. N° PIECES	DESCRIPTION DESCRIPTION	MH	M				REMARKS REMARQUES
1	703–48206–23	REMOTE CONTROL ASSY MONO LEVIER GAUCHE AVEC TRIM		1				AP WITHOUT PT/T SW. AP WITHOUT PT/T SW.
2	703–48232–00	.GEAR .PIGNON		1				
3	703–48271–00	.ARM, SHIFT .BRAS		1				
4	703–48261–01	.ARM, THROTTLE .BRAS, ACCELERATION		1				
5	703–48235–00	.BUSHING .COUSSINET		1				
6	703–48152–10	.KNOB, FREE ACCEL. .BOUTON		1				
7	703–48268–00	.SPACER .ENTRETOISE		1				
8	703–48264–00	.FRICTION, THROTTLE .FRICTION, ACCELERATION		1				
9	95380–05600	.NUT .ECROU		1				
10	97380–05025	.BOLT .BOULON, HEXAGONAL		1				
11	703–48265–10	.SHAFT, FRICTION .AXE, COPILOTE		1				
12	93430–06024	.CIRCLIP .CLIPS		3				
13	703–48245–00	.PLATE, LOCK .PLAQUE, VERROU		1				
14	703–48252–00	.ROLLER, CAM .POULIE		1				
15	701–48248–00	.ROLLER, FREE ACCEL. .POULIE		1				
16	703–48198–00	.WASHER, WAVE .RONDELLE, ELASTIQUE ONDULEE		1				
17	703–48243–00	.BUSHING .COUSSINET		1				
18	703–48236–00	.BUSHING 1 .POULIE		2				
19	703–48189–00	.RETAINER .FLASQUE		1				
20	703–48234–00	.ROLLER, DETENT .POULIE		1				
21	703–48345–01	.CABLE END, REMOTE CONTROL 2 .CHAPE CABLE		2				
22	703–48358–01	.ANCHOR, CABLE .COLLIER		1				
23	703–48244–00	.SPRING, FREE ACCEL. .RESSORT		1				
24	703–48238–00	.SPRING, DETENT .RESSORT		5				
25	703–48211–10	.HOUSING,1 .CORPS		1				
26	703–48212–10	.BACK PLATE 1 .PLAQUETTE 1		1				
27	703–48213–10	.BACK PLATE 2 .PLAQUETTE 2		1				

FIG. 29 REMOTE CONTROL ASSY — BOITIER DE COMMANDE A DISTANCE

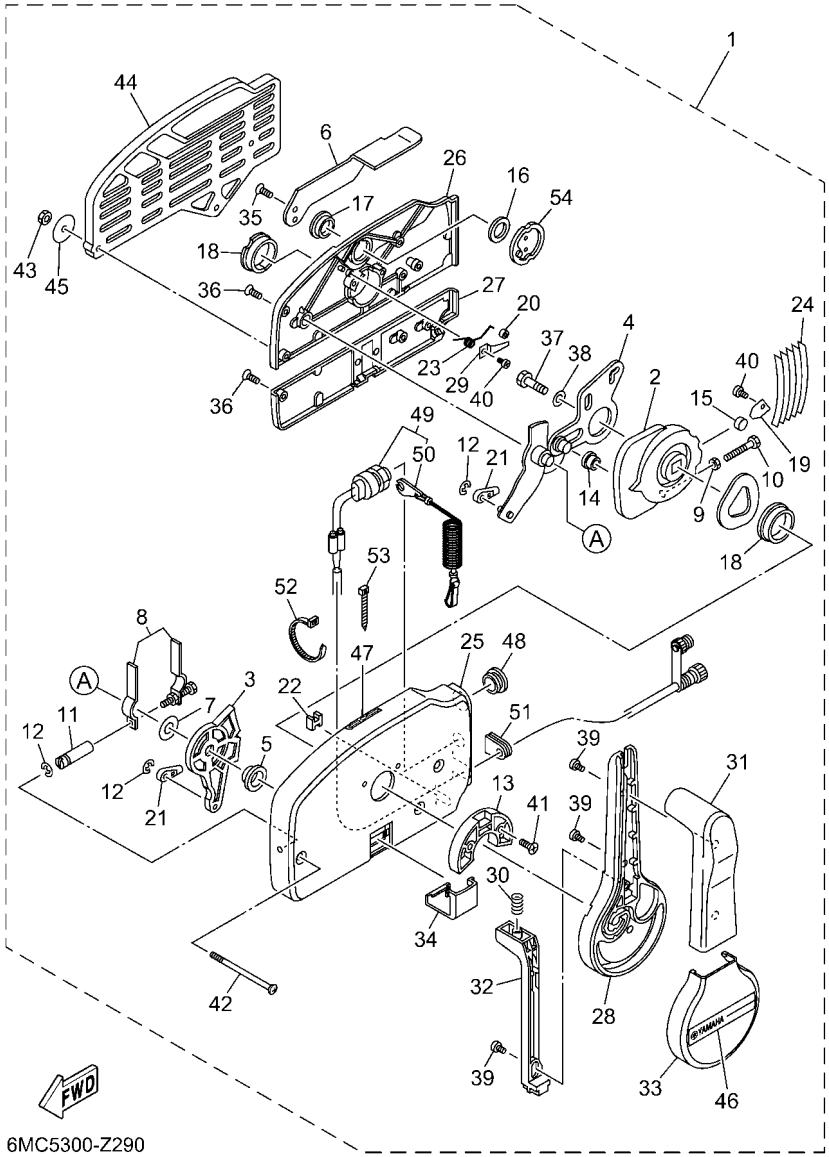

6MC5300-Z290

REF. NO.	PART NO. N° PIECES	DESCRIPTION DESCRIPTION	MH	M				REMARKS REMARQUES
28	703–48221–10	.LEVER, CONTROL .LEVIER, COMMANDE		1				
29	703–48246–00	.SPACER .ENTRETOISE		1				
30	703–48227–00	.SPRING, NEUTRAL LOCK .RESSORT		1				
31	703–48222–30	.GRIP, CONTROL LEVER .POIGNEE, COMMANDE LEVIER		1				SINGLE SINGLE
32	703–48223–10	.LOCK, NEUTRAL .VERROU, NEUTRAL		1				
33	703–48225–10	.COVER .COUVERCLE		1				
34	703–48219–10	.COVER, LEAD .COUVERCLE		1				
35	703–48281–00	.SCREW .VIS		2				
36	703–44189–20	.SCREW .VIS		5				
37	97380–08030	.BOLT .BOULON, HEXAGONAL		1				
38	92990–08600	.WASHER, PLATE .RONDELLE, PLATE		1				
39	703–48128–10	.SCREW 2 .VIS 2		3				
40	98580–04006	.SCREW, PAN HEAD .VIS		2				
41	703–44189–40	.SCREW .VIS		2				
42	703–44189–30	.SCREW .VIS		3				
43	95380–06600	.NUT, HEXAGON .ECROU		3				
44	703–48293–11	.SPACER, REMOTE CONTROL .ENTRETOISE		1				SINGLE SINGLE
45	701–48287–00	.WASHER .RONDELLE		3				
46	703–48215–11	.GRAPHIC .ADHESIF		1				
47	6X3–44191–00	.INDICATOR, SHIFT .ETIQUETTE, EMBRAYAGE		1				
48	703–48138–00	.CAP, LOCK ARM .AMORTISSEUR		1				
49	701–82575–54	.ENGINE STOP SWITCH ASSY .COUPE CIRCUIT CPLT		1				
50	682–82556–00	..LANYARD, STOP SWITCH ..CORDON DU COUPE CIRCUIT		1				
51	703–48284–20	.GROMMET .PASSE-FIL		1				
52	703–82591–00	.BAND .COLLIER		1				
53	703–82592–00	.BAND .COLLIER		1				
54	703–48153–00	.SHAFT, FREE ACCEL. .AXE		1				

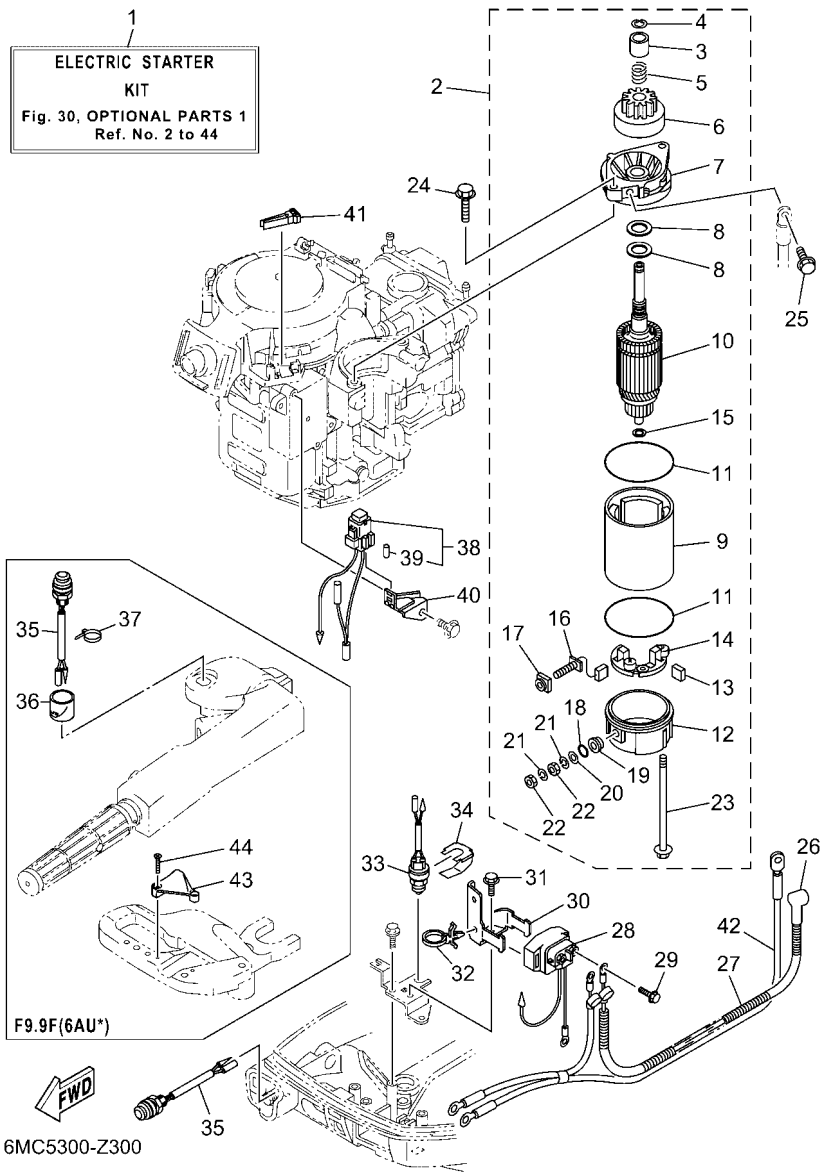

FIG. 30 OPTIONAL PARTS 1 — PIECES OPTIONNELLES 1

REF. NO.	PART NO. N° PIECES	DESCRIPTION DESCRIPTION	MH	M				REMARKS REMARQUES
1	6MC–W8180–02	ELECTRIC STARTER KIT KIT DEMARREUR ELECTRIQUE	1	1				
2	68T–81800–10	STARTING MOTOR ASSY DEMARREUR ELECTRIQUE COMPLET	1	1				
3	68T–81859–00	.STOPPER, PINION .BUTEE, PIGNON	1	1				
4	689–81884–00	.CLIP,PINION STOPPER .CLIP, STOPPEUR DE PIGNON	1	1				
5	689–81858–00	.SPRING, RETURN .RESSORT	1	1				
6	689–81807–20	.GEAR ASSY, STARTING MOTOR .PIGNON, DEMARREUR ELECTRIQUE	1	1				
7	68T–81830–00	.FRONT BRACKET ASSY .SUPPORT AVANT	1	1				
8	689–81835–00	.WASHER .RONDELLE	2	2				UN UN
9	689–81810–20	.STATOR ASSY .STATOR COMPLET	1	1				
10	689–81850–20	.ARMATURE ASSY .INDUIT	1	1				
11	689–81847–20	.O-RING .JOINT TORIQUE	2	2				
12	689–81820–20	.REAR BRACKET ASSY .SUPPORT ARRIERE COMPLET	1	1				
13	689–81812–20	.BRUSH 2 .CHARBON 2	1	1				
14	689–81840–20	.BRUSH HOLDER ASSY .SUPPORT DE CHARBON	1	1				
15	689–81824–00	.WASHER 2 .RONDELLE 2	1	1				
16	689–81811–20	.BRUSH 1 .CHARBON 1	1	1				
17	689–8182H–00	.BUSH, TERMINAL 2 .DOUILLE, BORNE 2	1	1				
18	689–8182L–00	.O-RING 1 .JOINT TORIQUE 1	1	1				
19	689–8182G–00	.BUSH, TERMINAL .BAGUE, BORNE	1	1				
20	689–8182E–00	.WASHER .RONDELLE	1	1				
21	689–8182F–00	.WASHER .RONDELLE	2	2				
22	689–8182A–00	.NUT .ECROU	2	2				
23	689–81826–20	.BOLT .BOULON	2	2				
24	90119–08M76	BOLT, WITH WASHER BOULON, AVEC RONDELLE	2	2				
25	97E95–08516	BOLT, HEXAGON W/W DEEP RECESS VIS HEXAGONAL AVC RONDELLE	1	1				
26	6G8–82117–01	WIRE, LEAD FIL	1	1				
27	90446–10M86	HOSE (L140) DURITE (L140)	1	1				

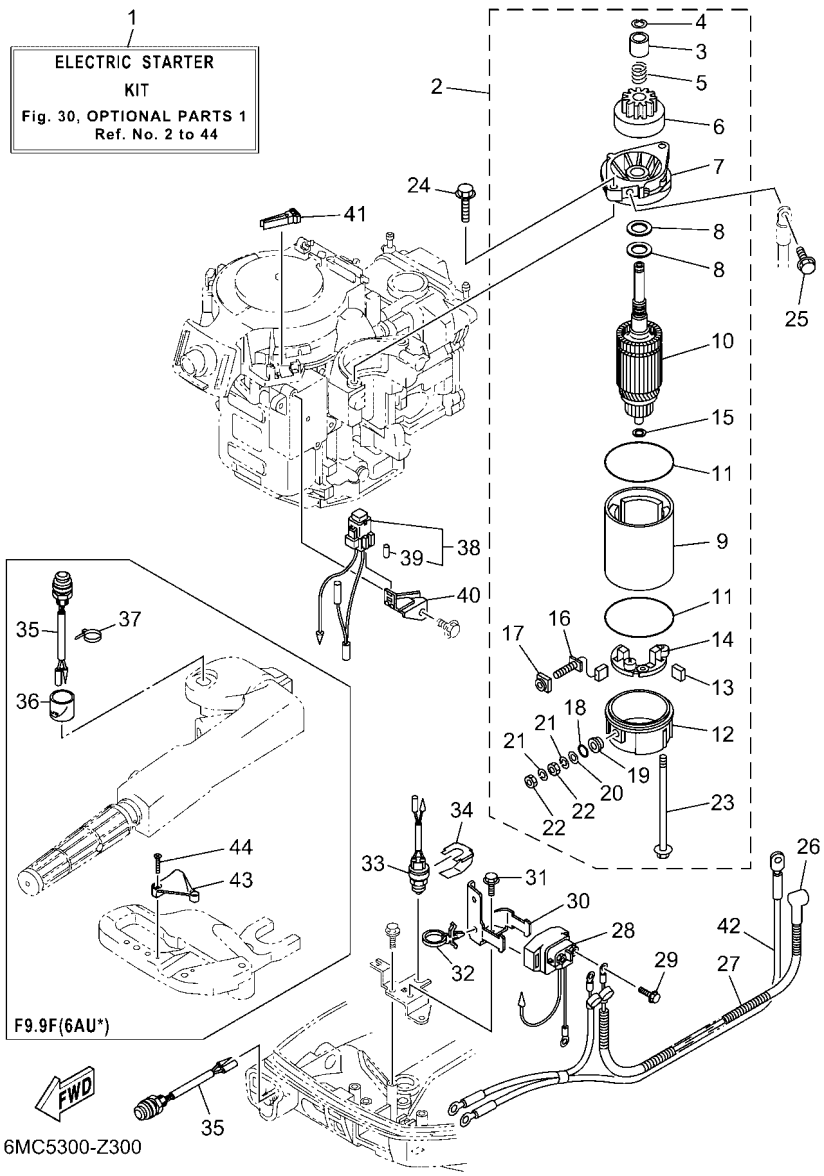

FIG. 30 OPTIONAL PARTS 1 — PIECES OPTIONNELLES 1

REF. NO.	PART NO. N° PIECES	DESCRIPTION DESCRIPTION	MH	M				REMARKS REMARQUES
28	68T–81940–00	STARTER RELAY ASSY LANCEUR RELAIS (ENS.)	1	1				
29	97E95–06610	BOLT, HEXAGON W/W DEEP RECESS VIS HEXAGONAL AVC RONDELLE	2	2				
30	68T–81945–01	PLATE, SWITCH FITTING PLAQUE, FIXATION DU RELAIS	1	1				
31	97E95–06512	BOLT, HEXAGON W/W DEEP RECESS VIS HEXAGONAL AVC RONDELLE	1	1				
32	90465–12M56	CLAMP BRIDE	1	1				
33	6F5–82540–01	NEUTRAL SWITCH ASSY CONTACTEUR DE POINT-MORT	1	1				
34	6DR–82555–00	DAMPER, MAIN SWITCH 1 AMORTISSEUR 1, CONTACT A CLEF	1	1				
35	68T–81870–00	STARTING SWITCH ASSY CONTACT A CLEF	1	1				
36	68T–81821–00	COVER, SWITCH COUVERCLE, COMMUTATEUR	1	1				
37	90465–11M10	CLAMP BRIDE	1	1				
38	68T–82150–00	FUSE HOLDER ASSY SUPPORT DE FUSIBLE	1	1				
39	66V–82151–00	.FUSE (10A-BL) .FUSIBLE (10A-BL)	2	2				
40	68T–82171–01	STAY, FUSE BOX SUPPORT, BOITE A FUSIBLES	1	1				
41	67F–2812A–00	PULLER, FUSE TENDEUR, FUSIBLE	1	1				
42	68T–82105–02	BATTERY CABLE (L: 2.1M) CABLE DE BATTERIE (L: 2.1M)	1	1				
43	68T–82594–00	CLAMP BRIDE	1	1				
44	90151–05003	SCREW, COUNTERSUNK VIS, TETE NOYEE	2	2				

FIG. 31 OPTIONAL PARTS 2 — PIECES OPTIONNELLES 2

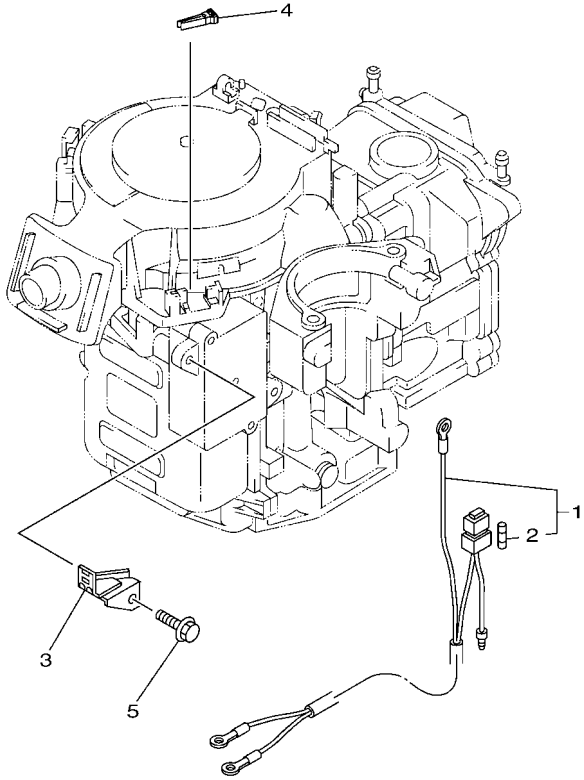

6EA510K-R330

REF. NO.	PART NO. N° PIECES	DESCRIPTION DESCRIPTION	MH	M				REMARKS REMARQUES
1	68T–81949–00	WIRE, LEAD FIL	1	1				
2	66V–82151–00	.FUSE (10A-BL) .FUSIBLE (10A-BL)	2	2				
3	68T–82171–01	STAY, FUSE BOX SUPPORT, BOITE A FUSIBLES	1	1				
4	67F–2812A–00	PULLER, FUSE TENDEUR, FUSIBLE	1	1				
5	97E95–06512	BOLT, HEXAGON W/W DEEP RECESS VIS HEXAGONAL AVC RONDELLE	1	1				

FIG. 32 OPTIONAL PARTS 3 — PIECES OPTIONNELLES 3

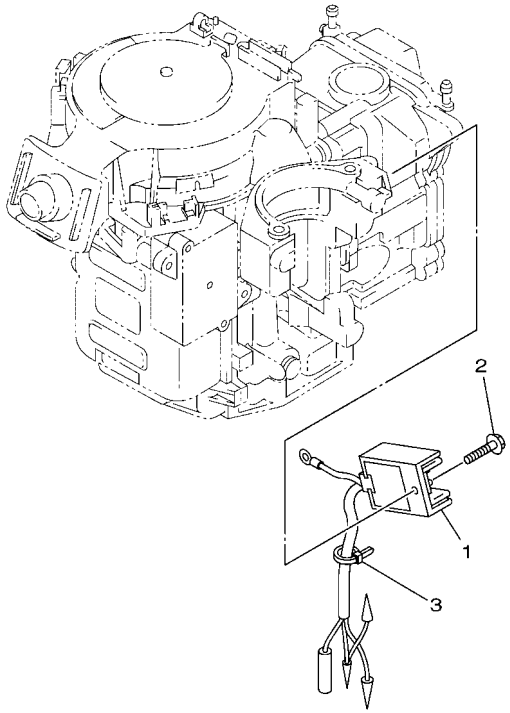

6EA5300-R390

REF. NO.	PART NO. N° PIECES	DESCRIPTION DESCRIPTION	MH	M				REMARKS REMARQUES
1	68T–81960–00	RECTIFIER & REGULATOR ASSY REDRESSEUR REGULATEUR CPLT	1	1				FOR REC/REG KIT FOR REC/REG KIT
2	97E95–06512	BOLT, HEXAGON W/W DEEP RECESS VIS HEXAGONAL AVC RONDELLE	1	1				FOR REC/REG KIT FOR REC/REG KIT
3	90465–11M10	CLAMP BRIDE	2	2				FOR REC/REG KIT FOR REC/REG KIT

FIG. 33 REPAIR KIT 1 — KITS DE REPARATION 1

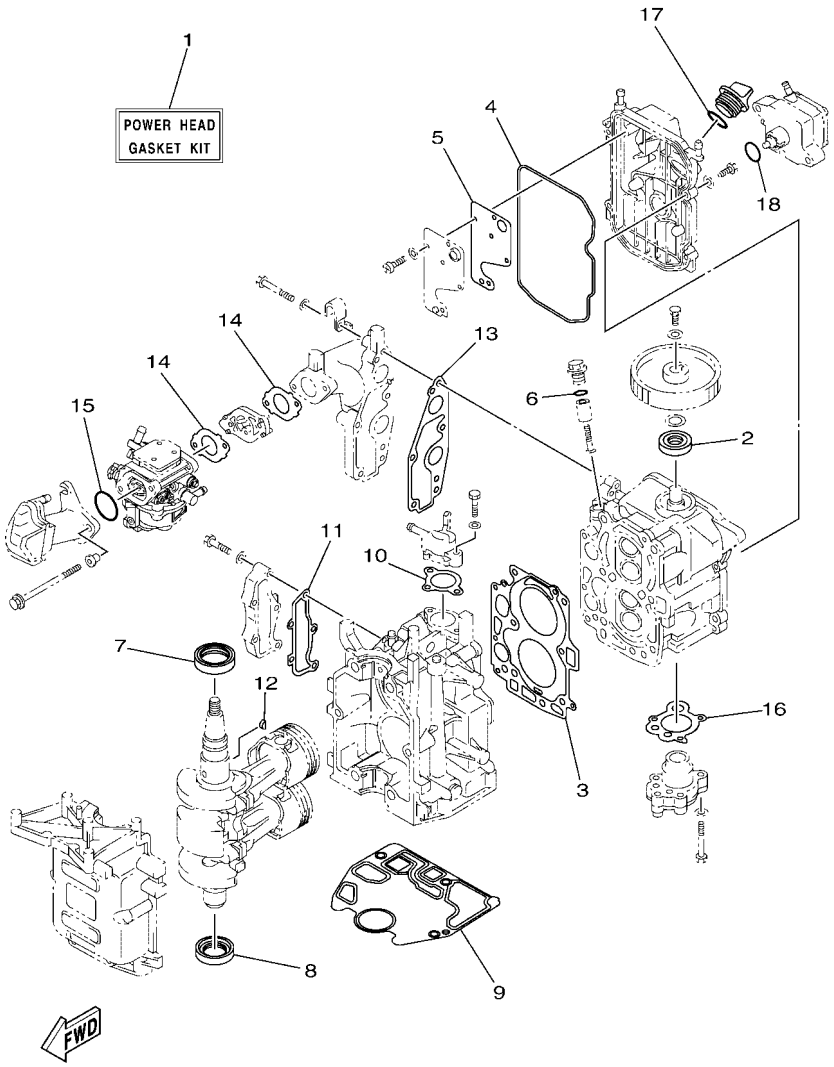

6MC1300-W330

REF. NO.	PART NO. N° PIECES	DESCRIPTION DESCRIPTION	MH	M				REMARKS REMARQUES
1	6AU–W0001–00	POWER HEAD GASKET KIT POCHETTE DE JINTS TETE MOTRICE	1	1				
2	93102–18M21	.OIL SEAL .JOINT SPY	1	1				
3	68T–11181–00	.GASKET, CYLINDER HEAD 1 .JOINT, DE CULASSE 1	1	1				
4	68T–11356–00	.SEAL, CYLINDER 2 .JOINT, SPY CYLINDRE	1	1				
5	68T–11169–A0	.GASKET, BREATHER COVER .JOINT, COUVERCLE DE RENIFLARD	1	1				
6	93210–13M63	.O-RING .JOINT TORIQUE	1	1				
7	93102–30M22	.OIL SEAL .JOINT SPY	1	1				
8	93101–25M69	.OIL SEAL .JOINT SPY	1	1				
9	68T–11351–00	.GASKET, CYLINDER .JOINT, D'EMBASE	1	1				
10	6G8–12414–A0	.GASKET, COVER .JOINT, COUVERCLE	1	1				
11	68T–41114–A0	.GASKET, EXHAUST OUTER COVER .JOINT, COUVERCLE D'ECHAPPEMENT	1	1				
12	90280–03M01	.KEY, WOODRUFF .CLAVETTE, DEMI-LUNE	1	1				
13	68T–13645–00	.GASKET, MANIFOLD 1 .JOINT, TUBULURE 1	1	1				
14	68T–13646–A0	.GASKET, MANIFOLD 2 .JOINT, TUBULURE 2	2	2				
15	93210–31MJ5	.O-RING .JOINT TORIQUE	1	1				
16	68T–13329–00	.GASKET, PUMP COVER .JOINT, COUVERCLE DE POMPE	1	1				
17	93210–24M79	.O-RING .JOINT TORIQUE	1	1				
18	93210–20M65	.O-RING .JOINT TORIQUE	1	1				

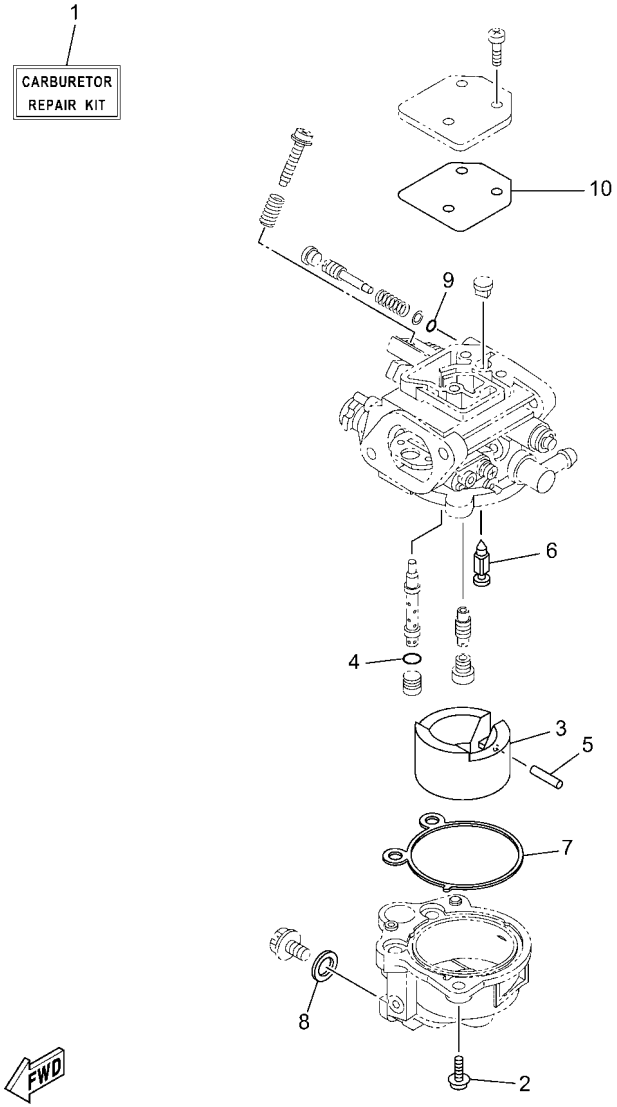

6FW8100-W300

FIG. 34 REPAIR KIT 2 — KITS DE REPARATION 2

REF. NO.	PART NO. N° PIECES	DESCRIPTION DESCRIPTION	MH	M				REMARKS REMARQUES
1	6DR–W0093–00	CARBURETOR REPAIR KIT KIT DE REPARATION CARBURATEUR	1	1				
2	62Y–14321–00	.SCREW, THROTTLE .VIS, ACCELERATEUR	2	2				
3	6DR–14385–00	.FLOAT .FLOTTEUR	1	1				
4	6DR–14561–00	.O-RING .JOINT TORIQUE	1	1				
5	4FP–14386–00	.PIN, FLOAT .AXE, FLOTTEUR	1	1				
6	6DR–14336–00	.NEEDLE .AIGUILLE	1	1				
7	6DR–14984–00	.GASKET, FLOAT CHAMBER .JOINT, CUVE DE FLOTTEUR	1	1				
8	652–14397–00	.O-RING .JOINT TORIQUE	1	1				
9	6DR–14397–00	.O-RING .JOINT TORIQUE	1	1				
10	6DR–14818–00	.COVER GASKET .JOINT DE COURERCLE	1	1				

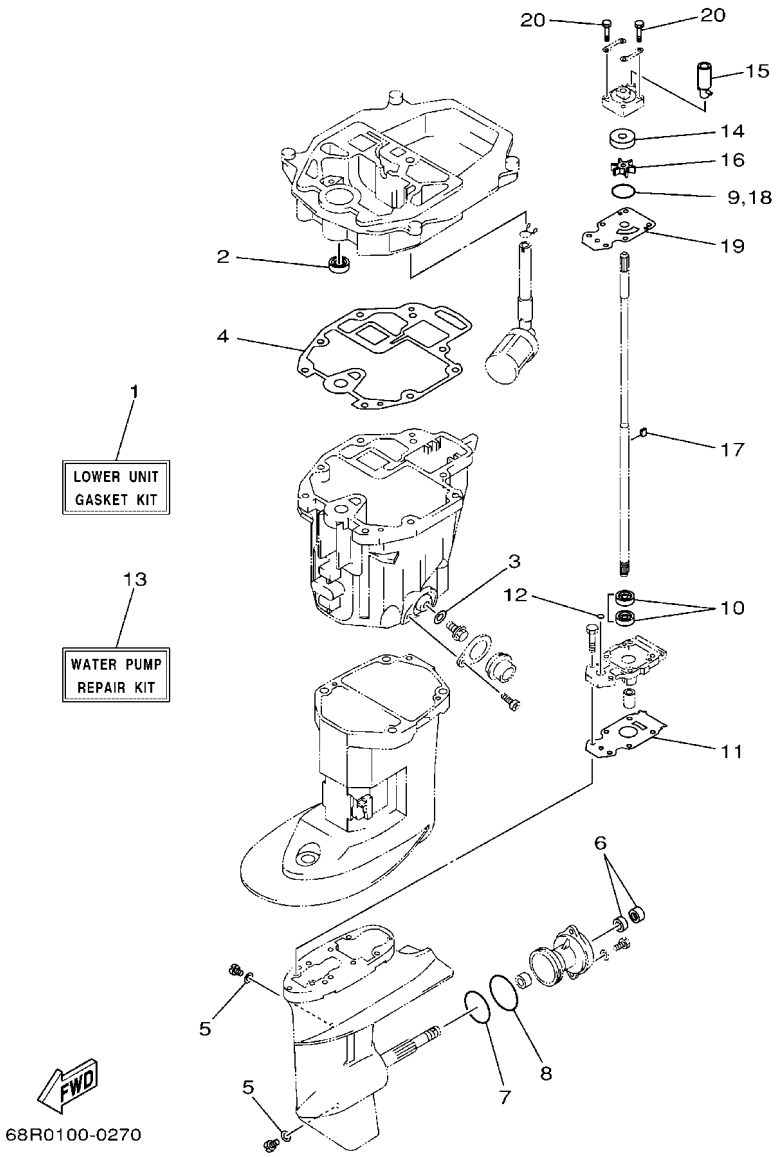

FIG. 35 REPAIR KIT 3 — KITS DE PEPARATION 3

REF. NO.	PART NO. N° PIECES	DESCRIPTION DESCRIPTION	MH	M				REMARKS REMARQUES
1	68T–W0001–20	LOWER UNIT GASKET KIT POCHETTE DE JOINTS EMBASE	1	1				
2	93101–12M70	.OIL SEAL .JOINT SPY	1	1				
3	90430–10M11	.GASKET .JOINT	1	1				
4	68T–13475–00	.GASKET .JOINT	1	1				
5	90430–08003	.GASKET .JOINT	2	2				
6	93101–15074	.OIL SEAL .JOINT SPY	2	2				
7	93210–49046	.O-RING .JOINT TORIQUE	1	1				
8	93210–53M08	.O-RING .JOINT TORIQUE	1	1				
9	93210–44398	.O-RING .JOINT TORIQUE	1	1				
10	93101–11M23	.OIL SEAL .JOINT SPY	2	2				
11	68T–45315–A0	.PACKING, LOWER CASING .JOINT, BOITIER D'HELICE	1	1				
12	93210–06ME6	.O-RING .JOINT TORIQUE	1	1				
13	68T–W0078–02	WATER PUMP REPAIR KIT KIT DE REPARATION DE LA POMPE	1	1				
14	63V–44322–00	.INSERT, CARTRIDGE .CUVETTE	1	1				
15	68T–44366–01	.DAMPER, WATER SEAL 2 .JOINT, TUBE D'EAU 2	1	1				
16	68T–44352–00	.IMPELLER .TURBINE	1	1				
17	664–44338–00	.KEY, WOODRUFF .CLAVETTE, VOLANT	1	1				
18	93210–44398	.O-RING .JOINT TORIQUE	1	1				
19	68T–44323–00	.OUTER PLATE, CARTRIDGE .PLAQUE EXTERIEURE	1	1				
20	97D95–08045	.BOLT, HEXAGON DEEP RECESS .VIS HEXAGONAL	4	4				

PART NO. N° PIECES	REF. NO.
6AU–11111–00–1S	5 – 2
6AU–11133–10	5 – 3
68T–11168–00	5 – 13
68T–11169–A0	5 – 14
	33 – 5
68T–11181–00	5 – 4
	33 – 3
68T–11191–01–1S	5 – 9
6G8–11197–A0	5 – 18
6G8–11325–00	1 – 3
	5 – 16
68T–11351–00	3 – 5
	33 – 9
68T–11356–00	5 – 11
	33 – 4
6H1–11372–00	23 – 13
6AU–11411–00	4 – 1
68T–11416–01	4 – 2
68T–11416–11	4 – 2
68T–11416–21	4 – 2
68T–11536–00	9 – 7
66M–11537–01	9 – 2
68T–11557–00	9 – 8
6G8–11575–00	23 – 9
6G8–11587–01	9 – 9
68T–11603–01	4 – 6
68T–11604–01	4 – 6
68T–11605–01	4 – 6
6AU–11631–00–96	4 – 5
68T–11633–00	4 – 7
6AU–11635–00	4 – 5
6AU–11636–00	4 – 5
6AU–11650–00	4 – 3
67D–11654–00	4 – 4
6AU–12111–00	6 – 1
60R–12113–00	6 – 4
68T–12116–00	6 – 3
7NJ–12117–00	6 – 5
7NJ–12118–00	6 – 6
51Y–12119–00	6 – 7
6AU–12121–00	6 – 2
68T–12146–00	6 – 8
68T–12151–00	6 – 12
6G8–12158–00	6 – 14
6G8–12159–00	6 – 13
68T–12171–01	9 – 1
66M–12411–01	1 – 1
	3 – 6

PART NO. N° PIECES	REF. NO.
688–12412–00	3 – 7
68T–12413–00–1S	3 – 8
6G8–12414–A0	1 – 2
	3 – 9
	33 – 10
68T–12481–00	3 – 11
6E5–12481–00	14 – 27
67F–12482–00	7 – 2
68T–12482–00	3 – 16
68T–12483–00	7 – 14
68T–12535–20	14 – 35
6DR–12572–00	14 – 33
6R3–12581–00	14 – 32
6R3–12582–00	14 – 30
6R3–12583–00	14 – 31
66M–13131–00	10 – 17
68T–13300–00	9 – 14
68T–13329–00	9 – 15
	33 – 16
68T–13421–01	23 – 7
6AU–13437–61	9 – 18
6FW–13448–00	17 – 26
	18 – 31
68T–13475–00	23 – 20
	35 – 4
68T–13641–20–1S	7 – 1
68T–13645–00	7 – 3
	33 – 13
68T–13646–A0	7 – 8
	33 – 14
6DR–14157–00	8 – 23
62Y–14212–00	8 – 3
6MC–14271–00	7 – 9
6DR–14285–00	8 – 20
6MC–14301–20	8 – 1
62Y–14321–00	8 – 5
	34 – 2
69W–14321–00	8 – 2
6DR–14321–00	8 – 4
6DR–14323–10	8 – 18
6E7–14325–00	10 – 14
6DR–1432A–00	8 – 7
6DR–14334–00	8 – 19
6DR–14336–00	8 – 10
	34 – 6
6FW–14341–00	8 – 13
6FW–14342–21	8 – 12
6FW–14343–39	8 – 11

PART NO. N° PIECES	REF. NO.
60S–14381–00	8 – 14
62Y–14383–30	8 – 16
6DR–14385–00	8 – 6
	34 – 3
4FP–14386–00	8 – 9
	34 – 5
652–14397–00	8 – 17
	34 – 8
6DR–14397–00	8 – 21
	34 – 9
6AU–14440–00	7 – 10
68T–14497–00	17 – 21
	18 – 26
6DR–14561–00	8 – 8
	34 – 4
6AU–14711–00–CA	22 – 2
6DR–14818–00	8 – 22
	34 – 10
6DR–14862–00	8 – 24
6DR–14984–00	8 – 15
	34 – 7
6AU–15100–00	3 – 2
68T–15311–01–CA	23 – 12
68T–15316–00	23 – 17
68T–15317–00	23 – 18
68T–15362–00	23 – 24
6G8–15363–00	5 – 20
63V–15705–01	11 – 8
68T–15710–14	11 – 1
68T–15711–03	11 – 2
63V–15713–00	11 – 6
63V–15714–00	11 – 4
68T–15716–00	11 – 7
66T–15731–00	11 – 21
66T–15734–00	11 – 19
63V–15741–00	11 – 5
63V–15744–00	11 – 11
6G1–15755–00	11 – 14
68T–15762–00	11 – 23
68T–15764–00	11 – 13
63V–15767–01	11 – 9
68T–15770–00	11 – 20
68T–15774–20	17 – 27
	18 – 34
6G1–15779–00	11 – 16
68T–15784–00	11 – 10
6A0–15789–01	11 – 17
68T–15793–00	11 – 12

PART NO. N° PIECES	REF. NO.
68T–15794–00	11 – 18
68T–15795–00	11 – 3
6YL–24201–07	26 – 1
68T–24251–01	1 – 5
	10 – 7
6YL–24260–10	26 – 3
6YL–24268–01	26 – 4
6G1–24304–11	10 – 1
6YL–24306–54	26 – 7
6AU–24311–00	10 – 25
6YL–24329–00	26 – 5
61N–24329–01	10 – 2
66M–24374–00	10 – 18
650–24378–00	5 – 10
68T–24410–02	10 – 11
66M–24411–02	10 – 15
66M–24413–01	10 – 12
6A0–24421–01	10 – 13
66M–24423–00	10 – 16
66M–24444–00	10 – 21
66M–24454–00	10 – 19
66M–24471–02	10 – 20
6YK–24610–10	26 – 2
6DR–26301–00	15 – 16
6DR–26316–01	15 – 17
68T–26367–01	14 – 13
68T–28100–02	10 – 29
67F–2812A–00	30 – 41
	31 – 4
6FW–28199–78–D0	10 – 30
6FW–28199–78–E0	10 – 30
6FW–28199–78–F0	10 – 30
6FW–28199–78–G0	10 – 30
6FW–28199–78–H0	10 – 30
6FW–28199–78–S0	10 – 30
6FW–28199–88–K0	10 – 31
6FW–28199–88–L0	10 – 31
6FW–28199–88–M0	10 – 31
6FW–28199–88–N0	10 – 31
6FW–28199–88–P0	10 – 31
6FW–28199–88–R0	10 – 31
6AU–41113–00–1S	3 – 13
68T–41114–A0	3 – 14
	33 – 11
68T–41137–00–CA	23 – 1
6AU–41211–00	17 – 20
	18 – 25
68T–41256–00	7 – 20

PART NO. N° PIECES	REF. NO.
6J8–41262–00	7 – 21
	17 – 25
	18 – 30
6H4–41271–02	7 – 18
689–41273–00	7 – 19
68T–41283–00	17 – 18
	18 – 23
68T–41638–00	17 – 17
	18 – 22
6G1–41662–01–94	17 – 3
	18 – 9
6DR–42101–00–8D	15 – 1
67D–42119–01	15 – 10
65W–42125–00	15 – 7
6DR–42126–00	15 – 6
6DR–42129–01	15 – 28
65W–42131–01	15 – 23
6FW–42137–00	15 – 11
6DR–42138–01	15 – 4
65W–42159–00	15 – 5
66R–42171–00	15 – 18
67D–42177–01	15 – 9
6AH–42508–03	16 – 1
6AU–42511–00–8D	21 – 1
6DR–42511–00–8D	21 – 1
6AU–42511–10–8D	21 – 1
6DR–42511–10–8D	21 – 1
68T–42525–01	16 – 2
6AH–42527–00	16 – 14
65W–42528–00	16 – 8
68T–42561–00	16 – 6
67C–42562–A0	16 – 4
6MC–42610–00	2 – 1
60R–42615–00	2 – 7
6DR–4261A–02	2 – 2
68T–42649–00	2 – 10
6DR–42649–01	2 – 5
6DR–42651–00	2 – 3
60R–42652–00	2 – 8
6BG–42662–01	2 – 6
60R–42675–01	2 – 13
60R–42676–11	2 – 14
6MC–42678–00	2 – 12
6AH–42697–10	2 – 11
6DR–42710–00–8D	14 – 1
68T–42716–10	14 – 5
65W–42717–00	14 – 16
	23 – 2

PART NO. N° PIECES	REF. NO.
68T–42717–01	14 – 22
68T–42724–20	14 – 14
68T–42724–50	14 – 14
6DR–42725–01	14 – 12
68T–42725–11	19 – 16
6DR–42725–11	19 – 15
6DR–42725–30	14 – 12
68T–42726–01	17 – 1
688–42726–11	14 – 15
682–42727–01	14 – 9
68T–42741–00	14 – 17
6DR–42761–00	14 – 10
6DR–42761–10	14 – 10
	19 – 14
68T–42771–00	14 – 23
6EE–42794–41	14 – 37
6EE–42794–51	14 – 38
6AU–42801–00	14 – 6
6AH–43111–00–8D	20 – 1
6AH–43112–00–8D	20 – 2
66R–43113–00	20 – 9
648–43114–01	20 – 6
6E7–43116–00	20 – 5
6E0–43118–01	20 – 3
69A–43131–00	20 – 7
6E5–43145–01	27 – 8
68T–43155–00	16 – 17
6L2–43160–01	20 – 15
63V–43191–00	20 – 26
6AH–43311–00–8D	20 – 17
6AU–43311–10–8D	20 – 17
6AH–43350–00	20 – 24
68T–43611–00	20 – 31
6AH–43614–00	20 – 28
6AH–43615–00	20 – 30
6DR–43616–00	20 – 19
6AH–43617–00	20 – 22
6AH–43627–00	20 – 36
6DR–43631–00	20 – 18
689–43633–01	16 – 7
6DR–43641–00	20 – 21
68T–43646–00	20 – 20
68T–43659–00	20 – 34
6DR–44111–00–8D	15 – 26
6AU–44111–10	18 – 5
	19 – 7
6DR–44113–A0	15 – 34
6DR–44114–00	15 – 44

PART NO. N° PIECES	REF. NO.
65W–44116–00	17 – 7
	18 – 13
6DR–44116–00	15 – 35
6DR–44117–01	17 – 8
	18 – 14
66R–44118–00	15 – 36
68T–44121–03	17 – 2
	18 – 8
68T–44143–01	17 – 10
	18 – 16
68T–44143–11	17 – 10
	18 – 16
61N–44146–00	17 – 12
	18 – 18
68T–44150–01	24 – 34
6DR–44173–00	15 – 27
703–44189–20	29 – 36
703–44189–30	29 – 42
703–44189–40	29 – 41
6X3–44191–00	29 – 47
63V–44301–00	24 – 18
63V–44322–00	24 – 19
	35 – 14
68T–44323–00	24 – 24
	35 – 19
63V–44328–01	24 – 27
664–44338–00	24 – 22
	35 – 17
68T–44352–00	24 – 21
	35 – 16
68T–44361–00	25 – 1
68T–44361–10	25 – 1
63V–44365–11	25 – 2
68T–44366–01	24 – 20
	35 – 15
6BL–44391–00	14 – 8
68T–44517–00	21 – 8
68T–44526–00	21 – 9
6AU–44551–00–8D	21 – 12
682–44555–30	21 – 14
6AU–44557–01	21 – 13
6AU–45111–00–8D	22 – 1
6AU–45111–10–8D	22 – 1
68T–45181–00	23 – 3
6G1–45214–00	25 – 5
6G1–45215–00	25 – 6
68T–45251–00	1 – 7
	24 – 6

PART NO. N° PIECES	REF. NO.
6AU–45300–05–8D	24 – 1
6AU–45300–15–8D	24 – 1
6AU–45311–01–8D	24 – 2
68T–45315–A0	24 – 31
	35 – 11
6G1–45316–09	24 – 29
6G1–45317–09	24 – 3
68T–45321–00	22 – 5
68T–45331–01–CA	24 – 28
6G1–45361–01–8D	24 – 11
6G1–45362–09	24 – 12
63V–45375–00	25 – 9
6AU–45511–00	24 – 35
6AU–45511–10	24 – 35
6G1–45533–00	24 – 39
6G1–45533–10	24 – 39
6G1–45533–20	24 – 39
6G1–45533–30	24 – 39
68T–45551–00	24 – 38
68T–45560–00	24 – 40
647–45567–00	24 – 44
68T–45571–00	24 – 42
664–45587–01	24 – 41
664–45587–10	24 – 41
664–45587–20	24 – 41
664–45587–30	24 – 41
664–45587–40	24 – 41
664–45587–50	24 – 41
664–45587–60	24 – 41
68T–45611–00	24 – 50
6G1–45616–01	25 – 16
68T–45631–00	24 – 45
6G1–45632–00	24 – 46
654–45633–00	24 – 47
6G1–45635–00	24 – 49
6G1–45941–00	25 – 14
6G1–45943–00	25 – 14
6G1–45947–00	25 – 14
6G1–45952–00	25 – 14
6G1–45954–00	25 – 14
6G1–45987–02	25 – 10
68T–46241–00	9 – 6
6AU–46297–00	9 – 12
703–48128–10	29 – 39
703–48138–00	29 – 48
703–48152–10	29 – 6
703–48153–00	29 – 54
703–48189–00	29 – 19

PART NO. N° PIECES	REF. NO.
703–48198–00	29 – 16
703–48206–23	28 – 1
	29 – 1
703–48211–10	29 – 25
703–48212–10	29 – 26
703–48213–10	29 – 27
703–48215–11	29 – 46
703–48219–10	29 – 34
703–48221–10	29 – 28
703–48222–30	29 – 31
703–48223–10	29 – 32
703–48225–10	29 – 33
703–48227–00	29 – 30
703–48232–00	29 – 2
703–48234–00	29 – 20
703–48235–00	29 – 5
703–48236–00	29 – 18
703–48238–00	29 – 24
703–48243–00	29 – 17
703–48244–00	29 – 23
703–48245–00	29 – 13
703–48246–00	29 – 29
701–48248–00	29 – 15
703–48252–00	29 – 14
703–48261–01	29 – 4
703–48264–00	29 – 8
703–48265–10	29 – 11
703–48268–00	29 – 7
703–48271–00	29 – 3
703–48281–00	29 – 35
703–48284–20	29 – 51
701–48287–00	29 – 45
703–48293–11	29 – 44
701–48310–80	28 – 2
701–48310–90	28 – 2
701–48320–00	28 – 2
6DR–48321–00	15 – 39
6FM–48344–00	18 – 20
	18 – 32
	19 – 10
	19 – 12
66R–48344–01	15 – 45
703–48345–01	29 – 21
703–48358–01	29 – 22
6DR–48501–03	19 – 1
63V–48511–01	19 – 17
	21 – 20
68T–48531–01	19 – 2

PART NO. N° PIECES	REF. NO.
6DR–48531–01	18 – 1
63D–48538–00	15 – 38
	17 – 16
66R–48538–00	15 – 37
68T–48538–00	17 – 14
682–48538–50	18 – 2
	19 – 3
68T–61350–10	27 – 1
6E5–61355–00	27 – 6
68T–81800–10	30 – 2
689–81807–20	30 – 6
689–81810–20	30 – 9
689–81811–20	30 – 16
689–81812–20	30 – 13
689–81820–20	30 – 12
68T–81821–00	30 – 36
68T–81822–01	13 – 12
689–81824–00	30 – 15
689–81826–20	30 – 23
689–8182A–00	30 – 22
689–8182E–00	30 – 20
689–8182F–00	30 – 21
689–8182G–00	30 – 19
689–8182H–00	30 – 17
689–8182L–00	30 – 18
68T–81830–00	30 – 7
689–81835–00	30 – 8
689–81840–20	30 – 14
689–81847–20	30 – 11
689–81850–20	30 – 10
689–81858–00	30 – 5
68T–81859–00	30 – 3
68T–81870–00	30 – 35
689–81884–00	30 – 4
68T–81940–00	30 – 28
68T–81945–01	30 – 30
68T–81949–00	31 – 1
68T–81960–00	32 – 1
6EE–81994–41	11 – 27
6EE–81994–51	11 – 28
6EE–81995–41	11 – 24
6EE–81995–51	11 – 25
68T–82105–02	30 – 42
6G8–82117–01	30 – 26
68T–82127–00	21 – 19
68T–82127–11	13 – 16
68T–82150–00	30 – 38
66V–82151–00	30 – 39

PART NO. N° PIECES	REF. NO.
66V–82151–00	31 – 2
68T–82171–01	30 – 40
	31 – 3
6E3–82370–21	13 – 9
67F–82504–00	13 – 15
68T–82522–00	13 – 2
6F5–82540–01	30 – 33
6DR–82555–00	30 – 34
682–82556–00	15 – 50
	29 – 50
65W–82575–01	15 – 49
701–82575–54	29 – 49
689–8257Y–00	15 – 51
703–82591–00	29 – 52
703–82592–00	29 – 53
68T–82594–00	30 – 43
6DR–82594–00	15 – 41
65W–84342–00	14 – 25
68T–85410–10	13 – 18
68T–85520–00	12 – 2
68T–85533–10	12 – 4
68T–85540–00	13 – 1
6DR–85550–10	12 – 1
680–85570–02	13 – 6
68T–85580–01	12 – 3
6H2–85582–00	12 – 5
68T–85711–60	11 – 26
6AU–W0001–00	33 – 1
68T–W0001–20	35 – 1
68T–W0078–02	1 – 9
	35 – 13
6DR–W0093–00	34 – 1
6AU–W009A–02–1S	5 – 1
6AU–W009B–00–1S	3 – 1
6G1–W4591–01	25 – 15
6G1–W4592–00	25 – 15
6MC–W8180–02	30 – 1
90101–06M18	20 – 12
90105–06188	7 – 13
90105–06M14	9 – 3
90105–08M36	5 – 6
90105–08M78	5 – 7
90109–06M80	15 – 3
90109–06M81	17 – 4
	18 – 10
90109–06M84	20 – 37
90109–06M86	14 – 11
	15 – 2

PART NO. N° PIECES	REF. NO.
90109–06M86	17 – 9
	17 – 28
	18 – 15
	18 – 35
90116–08M54	21 – 7
90119–05018	16 – 3
90119–06012	21 – 15
90119–06049	5 – 8
90119–06198	21 – 16
90119–06291	14 – 2
90119–06MA2	3 – 10
90119–06MA3	3 – 15
	7 – 5
	13 – 8
90119–06MA5	7 – 4
90119–08020	13 – 14
90119–08046	13 – 13
90119–08201	23 – 22
90119–08M29	3 – 4
90119–08M76	30 – 24
90151–05003	15 – 42
	30 – 44
90152–05011	15 – 12
90152–05M03	25 – 7
90157–05M16	26 – 6
90167–06002	14 – 34
90170–05M38	15 – 47
90170–09M03	27 – 4
90170–12066	12 – 11
90170–24M09	9 – 10
90171–10M01	25 – 12
90179–06M28	21 – 17
90185–05002	25 – 8
90185–08057	19 – 19
	21 – 22
90185–09M01	27 – 3
90185–10M14	16 – 13
90185–22043	20 – 10
90201–06117	15 – 46
90201–06M94	9 – 5
90201–08065	16 – 16
90201–10081	27 – 7
90201–106M5	16 – 18
90201–10M01	25 – 11
90201–10M02	15 – 13
	25 – 17
90201–10M20	27 – 2
90201–12472	12 – 12

NUMERICAL INDEX
INDEX NUMERIQUE

PART NO. N° PIECES	REF. NO.
90201–13201	9 – 4
90201–15M89	24 – 43
90201–43M00	15 – 19
90202–10M56	16 – 5
90202–26M59	15 – 33
90202–43M57	15 – 21
90206–10M24	20 – 38
90206–26M25	15 – 32
90206–43M22	15 – 20
90209–10M26	16 – 12
90209–40008	21 – 3
90243–04M01	20 – 4
90266–04005	2 – 4
90280–03M01	9 – 11
	33 – 12
90280–04M06	12 – 10
90338–06M20	14 – 24
90340–08002	24 – 9
90340–10M10	23 – 15
90386–08032	15 – 15
90386–22MA4	20 – 8
90386–26MA3	15 – 31
90386–30048	21 – 4
90386–30M60	21 – 6
90386–40001	21 – 2
90386–40M99	15 – 22
90387–05053	16 – 9
90387–05054	16 – 10
90387–06138	20 – 32
90387–06176	14 – 4
90387–06369	20 – 11
90387–06M59	17 – 19
	18 – 24
90387–06M70	7 – 12
90387–10M42	27 – 5
90387–13M56	6 – 9
90387–14M03	6 – 10
90387–14M49	24 – 4
90430–08003	1 – 8
	24 – 10
	35 – 5
90430–08143	23 – 5
90430–10M11	1 – 6
	23 – 16
	35 – 3
90445–09M20	7 – 7
90445–10046	10 – 4
90445–10M50	10 – 8

PART NO. N° PIECES	REF. NO.
90445–16010	10 – 10
90446–10M86	30 – 27
90447–13014	10 – 27
90447–13015	15 – 40
90447–13M00	14 – 29
90464–10M53	10 – 28
90464–10M60	17 – 5
	18 – 11
90465–08M83	7 – 16
90465–08M99	7 – 15
	13 – 10
90465–11M10	3 – 12
	3 – 18
	7 – 23
	10 – 5
	12 – 9
	13 – 17
	14 – 28
	30 – 37
	32 – 3
90465–12M56	30 – 32
90467–08M18	7 – 22
90467–09M05	24 – 36
90467–09M09	10 – 6
	10 – 9
	10 – 26
90467–10M04	3 – 17
90467–11M08	23 – 8
90468–18001	17 – 11
	18 – 17
90468–18008	18 – 21
	18 – 33
	19 – 11
	19 – 13
90480–06M19	14 – 26
90480–10627	9 – 13
90480–10M28	23 – 14
90480–14M54	22 – 4
90480–21M82	14 – 3
90480–25003	13 – 7
90501–12M40	6 – 11
90501–140A1	24 – 48
90501–23215	15 – 14
90502–10M07	20 – 16
90506–18014	20 – 25
90506–20020	20 – 29
90506–20025	20 – 25
90506–23016	20 – 29

PART NO. N° PIECES	REF. NO.
91490–16010	15 – 8
91490–20012	15 – 48
91490–30025	25 – 13
91690–30012	18 – 3
	19 – 4
91690–30014	17 – 6
	18 – 12
91690–50014	7 – 6
92990–06200	17 – 22
	18 – 27
92990–06300	24 – 8
92990–08600	29 – 38
92995–06100	14 – 19
92995–06600	14 – 20
	20 – 13
93101–11M23	24 – 30
	35 – 10
93101–12M70	23 – 6
	35 – 2
93101–15074	24 – 14
	35 – 6
93101–25M69	4 – 10
	33 – 8
93102–18M21	9 – 17
	33 – 2
93102–30M22	4 – 9
	33 – 7
93210–06ME6	24 – 32
	35 – 12
93210–12327	18 – 6
	19 – 8
93210–12M62	23 – 10
93210–13M63	5 – 19
	33 – 6
93210–16275	27 – 9
93210–20M65	10 – 24
	33 – 18
93210–24M79	5 – 21
	33 – 17
93210–29M94	21 – 5
93210–31MJ5	7 – 11
	33 – 15
93210–44398	24 – 23
	35 – 9
	35 – 18
93210–49046	24 – 15
	35 – 7
93210–53M08	24 – 16

PART NO. N° PIECES	REF. NO.
93210–53M08	35 – 8
93306–004U0	24 – 5
	24 – 13
93430–04M03	20 – 33
93430–06024	29 – 12
93450–15023	4 – 8
93604–12M07	22 – 8
	23 – 21
	24 – 25
	25 – 3
93606–19M23	23 – 11
93700–06004	21 – 18
94702–00274	1 – 4
	5 – 22
95380–04600	10 – 22
95380–05600	29 – 9
95380–06600	14 – 21
	19 – 6
	29 – 43
95380–06700	17 – 13
	18 – 19
	20 – 14
95380–08600	21 – 10
95380–10700	15 – 25
95780–10300	15 – 24
95D95–06016	24 – 7
97080–08025	24 – 33
97095–05010	12 – 7
97380–05025	29 – 10
97380–08030	29 – 37
97513–06530	12 – 6
	12 – 8
97595–05514	2 – 9
97595–05516	18 – 7
	19 – 9
97595–05520	16 – 11
97607–04210	5 – 15
97780–40512	13 – 3
97780–60920	15 – 29
97885–05008	22 – 7
	23 – 19
97885–06030	14 – 18
97D95–06008	22 – 6
97D95–08014	23 – 4
97D95–08016	16 – 15
97D95–08045	24 – 26
	35 – 20
97E75–06514	22 – 3

PART NO. N° PIECES	REF. NO.
97E75–06525	21 – 11
97E95–06510	7 – 17
97E95–06512	13 – 5
	13 – 11
	14 – 7
	14 – 36
	17 – 15
	17 – 24
	18 – 4
	18 – 29
	19 – 5
	30 – 31
	31 – 5
	32 – 2
97E95–06516	24 – 17
97E95–06520	5 – 12
	11 – 22
	13 – 4
97E95–06525	10 – 3
97E95–06530	9 – 16
97E95–06545	17 – 23
	18 – 28
97E95–06610	30 – 29
97E95–06630	10 – 23
97E95–08516	30 – 25
97E95–08530	23 – 23
97E95–08535	15 – 30
	19 – 18
	21 – 21
	22 – 9
	25 – 4
98580–04006	29 – 40
98980–05025	5 – 17
99001–07600	24 – 37
99080–04600	15 – 43
99080–05600	20 – 23
	20 – 27
	20 – 35
99530–10114	5 – 5
99530–12016	3 – 3

PART NO. N° PIECES	REF. NO.