YAMAHA

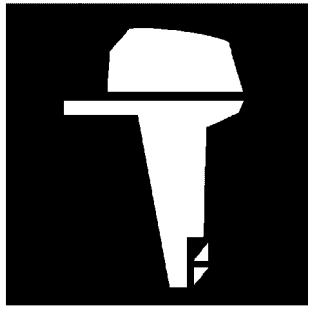

PARTS CATALOGUE
CATALOGUE DE PIECES DETACHEES

F175C-2026 (6LY4)
F175GET'26 (6LY4)

316LY-300F1

( )

YAMAHA
GENUINE
Parts & Accessories

F175C,F175GET
PARTS CATALOGUE
©2026 by Yamaha Motor Co., Ltd.
1st edition, June 2026
All rights reserved.
Any reprinting or unauthorized use
without the written permission of
Yamaha Motor Co., Ltd.
is expressly prohibited.
Printed in Japan.

F175C,F175GET
CATALOGUE DE PIECES DETACHEES
©2026 par Yamaha Motor Co., Ltd.
1re édition, juin 2026
Tous droits réservés
Toute réimpression ou utilisation
non autorisée sans la permission écrite
de Yamaha Motor Co., Ltd.
est formellement interdite.
Imprimé au Japon

FOREWORD

This Parts Catalogue is related to the parts for the model(s) on the cover page. When you are ordering replacement parts, please refer to this Parts Catalogue and quote both part numbers and part names correctly.

1. Modifications or additions which have been made after the issue of the Parts Catalogue will be announced in the Parts News.
   It is advisable that you make the necessary corrections to the Parts Catalogue according to the Parts News.

2. Abbreviations
   The following abbreviations are used in this Parts Catalogue.
   "UR" Use specified parts number.
   "UN" Use as many as needed.
   "AP" Alternate Parts
   "LM" Locally Made (Parts need to be ordered locally)
   "F#" Frame No. (Applicable machine No.)
   "O/S" Over Size

3. The number of components for assembly
   - Parts, which are to be supplied in an assembly, are listed with a dot (.) in front of the part name as shown below.
   - The numeral appearing to the right of each component part indicates the quantity of parts for each assembly unit.

PART NO.	DESCRIPTION	Q'TY	REMARKS
2F5–83310–60	FRONT FLASHER LIGHT ASSY	2	
115–83311–60	.BULB (6V–18W)	1	

4. Applicable colours of graphics are represented in the "REMARKS" as shown below.

PART NO.	DESCRIPTION	Q'TY	REMARKS
2N4–24110–00–X5	FUEL TANK COMP.	2	MXR
3J1–24240–10	.GRAPHIC, FUEL TANK	1	FOR MXR

5. Note that the illustrations for reference in finding parts numbers are not to be used for assembling. When assembling, please use the applicable service manual.

6. The asterisk (*) before a reference number indicates modified items after the first edition.

7. Applicable Serial No.
   Engine Serial No.

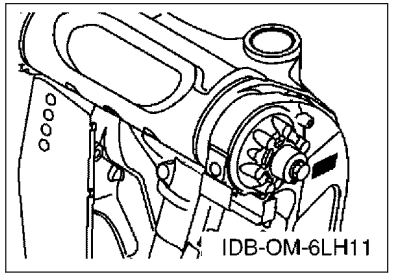

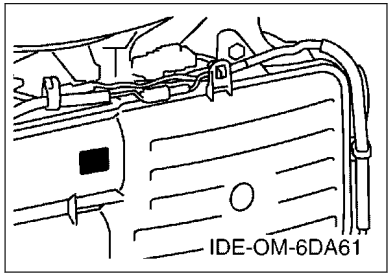

8. Applicable Engine Starting Serial No.

Model	Serial No.	Model	Serial No.
F175C	6LY-1000922	F175G	6LY-1000922

9. Applicable Colour Code

Abbreviation	Colour Name	Colour Code
DBN1	DARK BLUISH GRAY 1	008D

10. Quantity Column Information

Column No.	Name Of Q'ty Column	Applicable Model
1	6LY4	F175C,F175GET

AVANT–PROPOS

Ce catalogue de pièces détachées concerne les pièces pour le(s) modèle(s) indiqué(s) sur la page de couverture. Lorsque vous commandez des pièces de rechange, veuillez vous référer à ce catalogue de pieces détachées et indiquer clairement les numéros et les noms des pièces détachées.

1. Les modifications ou ajouts ayant été effectués après la parution du catalogue de pièces détachées seront décrits dans les Bulletins d'information concernant les pièces détachées.
   Il est recommandé que vous apportiez les corrections nécessaires au catalogue des pièces détachées en vous référant aux Bulletins d'information.

2. Abréviations
   Dans ce catalogue, les abréviations suivantes sont utilisées:
   "UR" Utiliser le numéro de pièces spécifié.
   "UN" Utiliser autant que nécessaire.
   "AP" Pièces de substitution
   "LM" Fabrication locale (les pièces doivent être commandées localement.)
   "F#" N° de cadre (applicable au N° de série)
   "O/S" Surdimensionné

3. Nombre de pièces d'un assemblage
   - Les pièces fournies comme composants d'un assemblage sont précédées d'un point (.) de la manière indiquée ci–dessous.
   - Le chiffre apparaissant à la droite de chaque composant indique la quantité de pièces pour chaque unité d'assemblage.

N° PIECES	DESCRIPTION	QTE	REMARQUES
2F5–83310–60	ENS. CLIGNOTANT AVANT	2	
115–83311–60	.AMPOULE (6V–18W)	1	

4. Les couleurs concernant les graphiques sont indiquées dans la colonne "REMARQUES", comme indiqué ci–dessous.

N° PIECES	DESCRIPTION	QTE	REMARQUES
2N4–24110–00–X5	RESERVOIR A ESSENCE.	2	MXR
3J1–24240–10	.GRAPHIQUE	1	POUR MXR

5. Veuillez noter que les illustrations sont indiquées à titre de référence pour trouver les numéros de pièces, non pour être utilisées lors de l'assemblage. Lors de l'assemblage, veuillez utiliser le manuel d'entretien adéquat.

6. L'astérisque (*) placé devant un numéro de référence indique des éléments qui ont été modifiés après la première édition.

7. N° de série applicable
   N° de Série du moteur

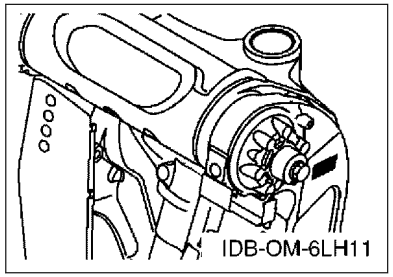

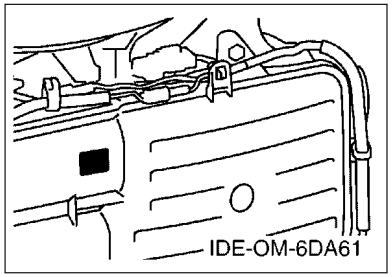

8. N° de série initial du moteur applicable

Modèle	N° de série	Modèle	N° de série
F175C	6LY-1000922	F175G	6LY-1000922

9. Code couleur applicable

Abréviation	Nom de la couleur	Code couleur
DBN1	DARK BLUISH GRAY 1	008D

10. Informations relatives à la colonne Quantité

N° de la colonne	Nom de la colonne Qté	Modèle applicable
1	6LY4	F175C,F175GET

CONTENTS

SCHEDULED SERVICE PARTS....1
TOP COWLING....2
CYLINDER & CRANKCASE 1....3
CRANKSHAFT & PISTON....5
CYLINDER & CRANKCASE 2....6
CYLINDER & CRANKCASE 3....7
CYLINDER & CRANKCASE 4....9
VALVE....10
INTAKE 1....13
INTAKE 2....14
INTAKE 3....16
FUEL INJECTION PUMP 1....17
FUEL INJECTION PUMP 2....19
FUEL 1....20
FUEL 2....22
GENERATOR....23
ELECTRICAL 1....25
ELECTRICAL 2....27
ELECTRICAL 3....28
ELECTRICAL 4....29
ELECTRICAL 5....30
STARTING MOTOR....31
BOTTOM COWLING 1....32
BOTTOM COWLING 2....34
BOTTOM COWLING 3....35
CONTROL....37
BRACKET 1....39
BRACKET 2....41
BRACKET 3....42
BRACKET 4....44
BRACKET 5....46
POWER TRIM & TILT ASSY 1....47
POWER TRIM & TILT ASSY 2....50
UPPER CASING....51
OIL PAN....53
LOWER CASING & DRIVE 1....54
LOWER CASING & DRIVE 2....58
REMOTE CONTROL BOX....61
REMOTE CONTROL ASSY....62
OPTIONAL PARTS 1....65
OPTIONAL PARTS 2....66
OPTIONAL PARTS 3....67
OPTIONAL PARTS 4....68
REPAIR KIT 1....69
REPAIR KIT 2....70

INDEX

NUMERICAL INDEX....72

TABLE DES MATIERES

PIECES MAINTENANCE PERIODIQUE.....1
CAPOT SUPERIEUR..... 2
CYLINDRE & CARTER 1..... 3
VILEBREQUIN & PISTON.....5
CYLINDRE & CARTER 2..... 6
CYLINDRE & CARTER 3..... 7
CYLINDRE & CARTER 4..... 9
SOUPAPE..... 10
ADMISSION 1.....13
ADMISSION 2.....14
ADMISSION 3.....16
POMPE A INJECTEUR 1..... 17
POMPE A INJECTEUR 2..... 19
CARBURANT 1..... 20
CARBURANT 2..... 22
GENERATRICE.....23
PARTIE ELECTRIQUE 1.....25
PARTIE ELECTRIQUE 2.....27
PARTIE ELECTRIQUE 3.....28
PARTIE ELECTRIQUE 4.....29
PARTIE ELECTRIQUE 5.....30
DEMARREUR ELECTRIQUE.....31
CAPOT INFERIEUR 1.....32
CAPOT INFERIEUR 2.....34
CAPOT INFERIEUR 3.....35
COMMANDE..... 37
SUPPORT 1..... 39
SUPPORT 2..... 41
SUPPORT 3..... 42
SUPPORT 4..... 44
SUPPORT 5..... 46
PUISSANCE PARER ET INCLINER 1..... 47
PUISSANCE PARER ET INCLINER 2..... 50
FOURREAU.....51
VENTILATEUR D'HUILE..... 53
BOITIER D'HELICE TRANSMISSION1.....54
BOITIER D HELICE TRANSMISSION2..... 58
BOITIER DE COMMANDE A DISTANCE..... 61
BOITIER DE COMMANDE A DISTANCE..... 62
PIECES OPTIONNELLES 1.....65
PIECES OPTIONNELLES 2.....66
PIECES OPTIONNELLES 3.....67
PIECES OPTIONNELLES 4.....68
KITS DE REPARATION 1..... 69
KITS DE REPARATION 2..... 70

INDEX

INDEX NUMERIQUE.....72

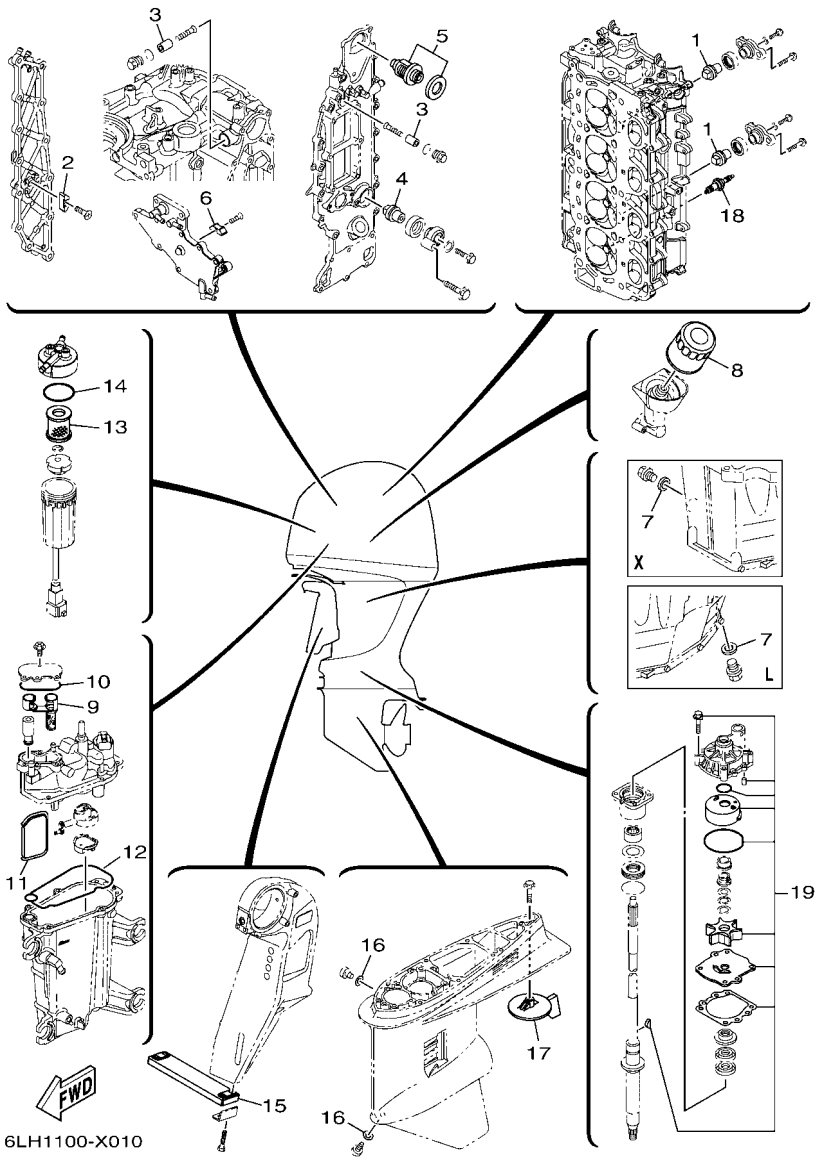

FIG. 1 SCHEDULED SERVICE PARTS — PIECES MAINTENANCE PERIODIQUE

REF. NO.	PART NO. N° PIECES	DESCRIPTION DESCRIPTION	6LY4					REMARKS REMARQUES
1	6ML–11325–00	ANODE ANODE	2					
2	6E5–11325–00	ANODE ANODE	1					
3	68T–11325–00	ANODE ANODE	2					
4	6ML–11325–00	ANODE ANODE	1					
5	6DA–12411–01	THERMOSTAT THERMOSTAT	1					
6	6E5–11325–00	ANODE ANODE	1					
7	90430–14M09	GASKET JOINT	1					
8	69J–13440–05	ELEMENT ASSY, OIL CLEANER ELEMENT, FILTRE A HUILE	1					
9	6CB–24501–01	FILTER, FUEL FILTRE	1					
10	6CB–13016–00	O-RING JOINT TORIQUE	1					
11	6LH–13915–00	FILTER FILTRE	1					
12	6CB–14984–00	GASKET, FLOAT CHAMBER JOINT, CUVE DE FLOTTEUR	1					
13	6P3–24563–02	ELEMENT, FILTER ELEMENT, FILTRE	1					
14	6P3–24564–00	GASKET JOINT	1					
15	6AW–45251–00	ANODE ANODE	1					
16	90430–08003	GASKET JOINT	2					
17	6J9–45371–01	TAB-TRIM ANODE DERIVE	1					
18	94702–00400	PLUG, SPARK (NGK LFR6A-11) BOUGIE D'ALLUMAGE(NGK LFR6A-11	4					
19	61A–W0078–A4	WATER PUMP REPAIR KIT KIT DE REPARATION DE LA POMPE	1					

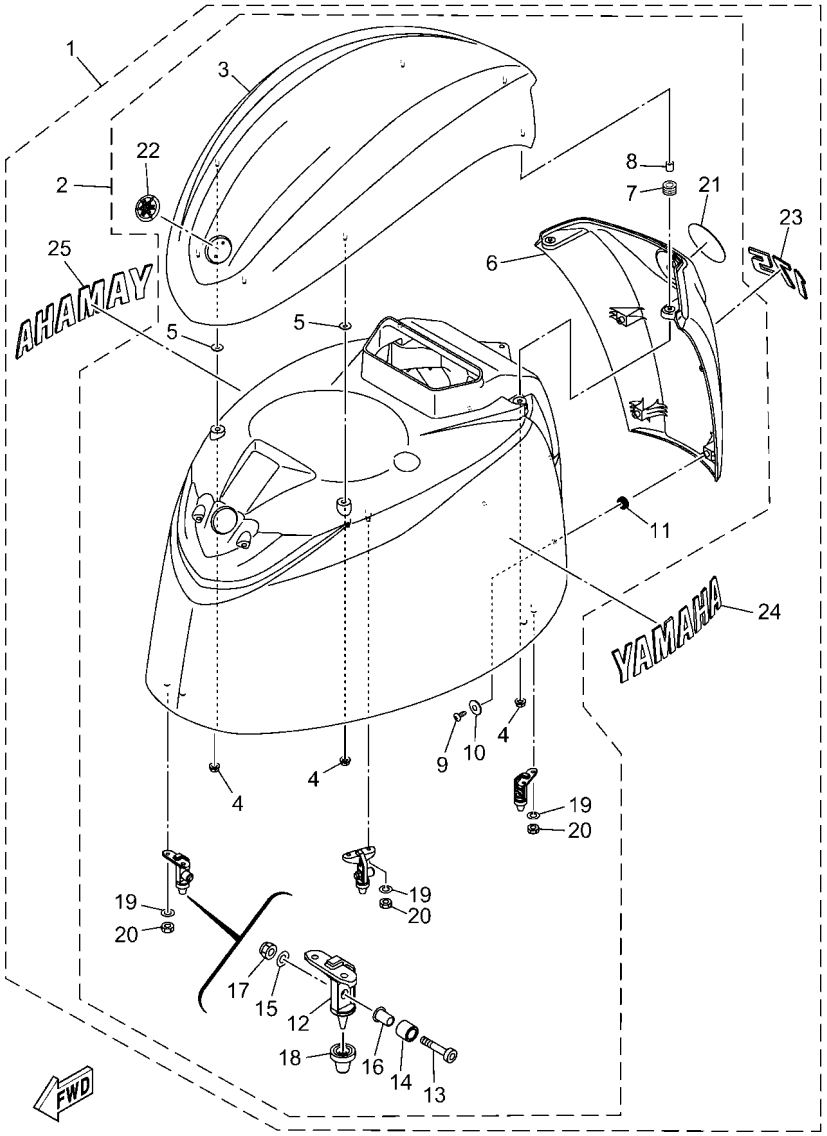

6LK4100-1020

FIG. 2 TOP COWLING — CAPOT SUPERIEUR

REF. NO.	PART NO. N° PIECES	DESCRIPTION DESCRIPTION	6LY4					REMARKS REMARQUES
1	6LK–42610–01–8D	TOP COWLING ASSY CAPOT (ENS.)	1					
2	6LH–4261A–02–8D	.TOP COWLING W/O GRAPHICS .CAPOT SUPERIEUR SANS GRAPHIQUE	1					
3	6LH–42613–00–8D	..MOLDING, AIR DUCT ..MANCHON A AIR	1					
4	90179–06M28	..NUT ..ECROU	7					
5	6CB–42545–00	..WASHER, PLAIN ..RONDELLE, PLATE	4					
6	6LH–42625–00–8D	..PANEL, REAR ..PANNEAU	1					
7	90480–13004	..GROMMET ..PASSE-FIL	2					
8	90387–07054	..COLLAR ..COLLERETTE	2					
9	97780–50016	..SCREW, TAPPING ..VIS, TETE BOMBEE	4					
10	90201–053R1	..WASHER, PLATE ..RONDELLE, PLATE	4					
11	90480–16009	..GROMMET ..PASSE-FIL	4					
12	6CB–42647–B0	..HOLDER, CLAMP BAND ..SUPPORT, SANDOW DE SERRAGE	3					
13	90111–08078	..BOLT, HEXAGON SOCKET BUTTON ..BOULON	3					
14	90387–10094	..COLLAR ..COLLERETTE	3					
15	92990–08600	..WASHER, PLATE ..RONDELLE, PLATE	3					
16	90387–08M45	..COLLAR ..COLLERETTE	3					
17	95780–08300	..NUT, FLANGE ..ECROU	3					
18	6AW–42663–01	..DAMPER 2 ..AMORTISSEUR 2	3					
19	92990–06100	..WASHER, SPRING ..RONDELLE, GROWER	6					
20	95380–06600	..NUT, HEXAGON ..ECROU	6					
21	6LH–42697–00	..TUNING FORK MARK ..MARQUE, YAMAHA	1					
22	6AH–42697–10	..TUNING FORK MARK ..MARQUE, YAMAHA	1					
23	6LK–42678–00	.GRAPHIC, REAR .ADHESIF, ARRIERE	1					
24	6LH–2153A–00	.EMBLEM, YAMAHA .EMBLEME, YAMAHA	1					
25	6LH–2153B–00	.EMBLEM, YAMAHA .EMBLEME, YAMAHA	1					

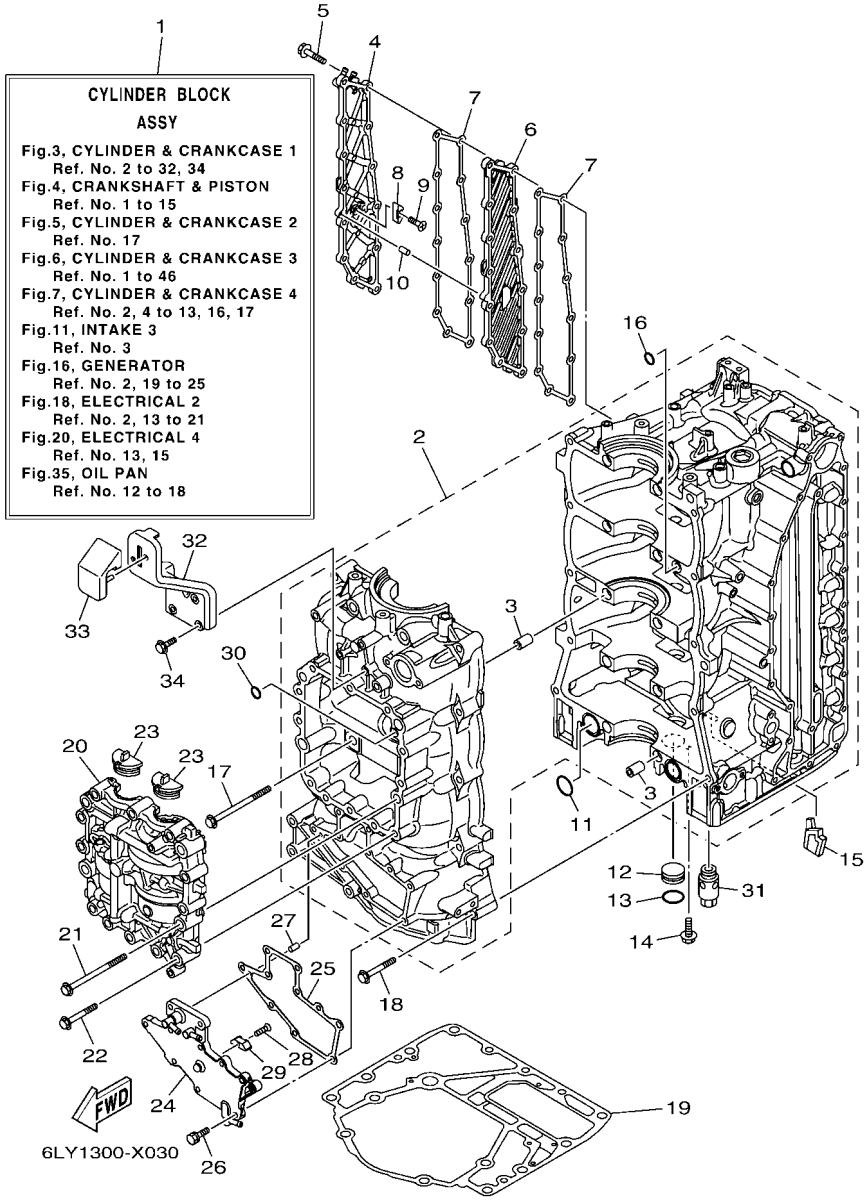

FIG. 3 CYLINDER & CRANKCASE 1 — CYLINDRE & CARTER 1

REF. NO.	PART NO. N° PIECES	DESCRIPTION DESCRIPTION	6LY4					REMARKS REMARQUES
1	6DA–W009B–17–9S	CYLINDER BLOCK ASSY CYLINDRE GROUPE (ENS.)	1					
2	6DA–15109–01–9S	CRANKCASE ASSY CARTER DE MOTEUR COMPLET	1					
3	91814–18002	.PIN, DOWEL .GOUJON, D'ASSEMBLAGE	10					
4	6DA–15414–00–9S	COVER 1 COUVERCLE 1	1					
5	90105–06028	BOLT, FLANGE BOULON, A COLLERETTE	13					
6	6DA–15423–00–9S	COVER 2 COUVERCLE 2	1					
7	6DA–15353–01	GASKET, DRAIN JOINT, PLOT DE VIDANGE	2					
8	6E5–11325–00	ANODE ANODE	1					
9	98780–04016	SCREW, FLAT HEAD VIS A TETE FRAISEE	1					
10	91690–40010	PIN, SPRING AGRAFFE	1					
11	93210–25552	O-RING JOINT TORIQUE	2					
12	90338–25004	PLUG PLOT	1					
13	93210–25647	O-RING JOINT TORIQUE	1					
14	90119–06276	BOLT, WITH WASHER BOULON, AVEC RONDELLE	1					
15	6DA–14664–01	GROMMET, WATER SHUT PASSE-FIL	1					
16	93210–12648	O-RING JOINT TORIQUE	1					
17	90105–10406	BOLT, FLANGE BOULON, A COLLERETTE	10					
18	90119–08M66	BOLT, WITH WASHER BOULON, AVEC RONDELLE	10					
19	63P–11351–04	GASKET, CYLINDER JOINT, D'EMBASE	1					
20	6DA–11500–01	BALANCER ASSY ARBRE D'EQUILIBRAGE COMPLET	1					
21	90105–10406	BOLT, FLANGE BOULON, A COLLERETTE	4					
22	90105–08175	BOLT, FLANGE BOULON, A COLLERETTE	12					
23	63P–11512–00	SEAL, CRANK COVER JOINT, COUV DE VILEBREQUIN	2					
24	6DA–15411–00–9S	COVER, CRANKCASE 1 COUVERCLE 1, CARTER MOTEUR	1					
25	6DA–15451–01	GASKET, CRANKCASE COVER 1 JOINT, COUVERCLE DE CARTER 1	1					
26	90119–06MA3	BOLT, WITH WASHER BOULON, AVEC RONDELLE	10					
27	91690–40010	PIN, SPRING AGRAFFE	1					

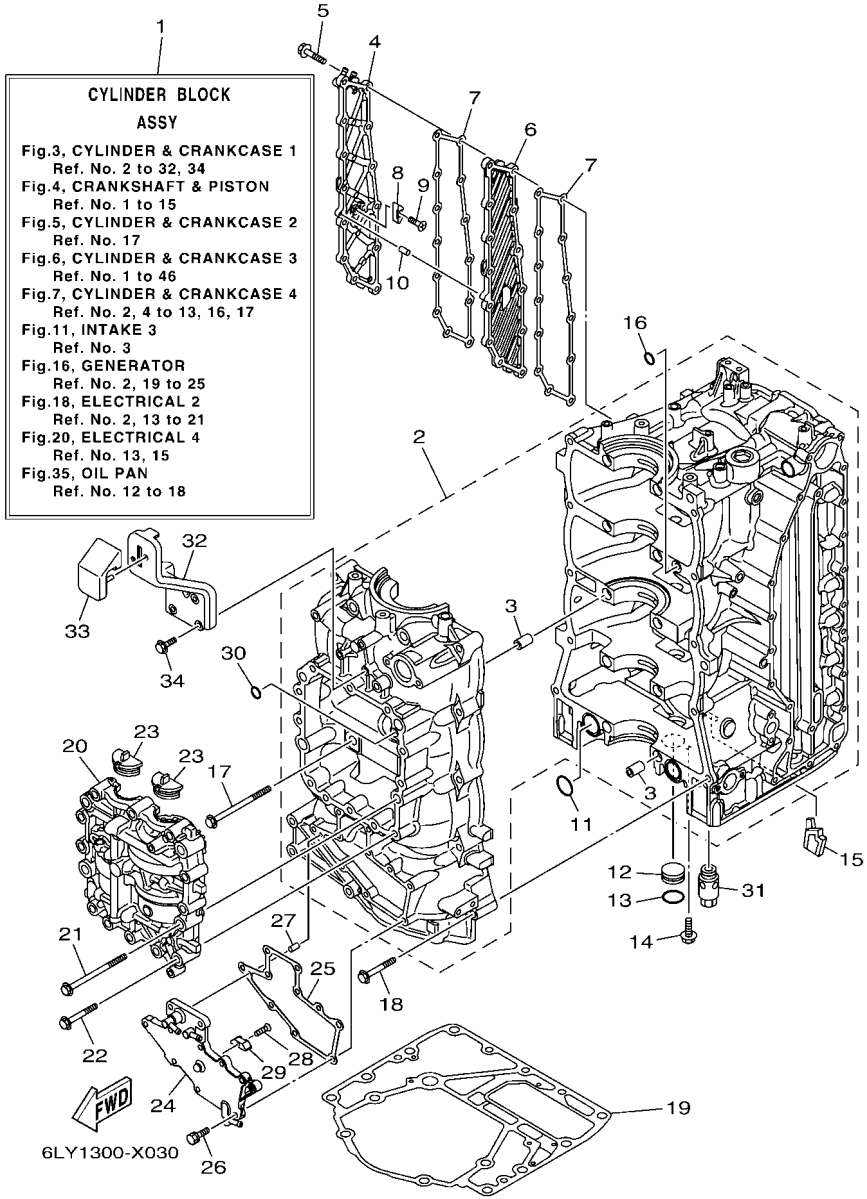

FIG. 3 CYLINDER & CRANKCASE 1 — CYLINDRE & CARTER 1

REF. NO.	PART NO. N° PIECES	DESCRIPTION DESCRIPTION	6LY4					REMARKS REMARQUES
28	98780–04016	SCREW, FLAT HEAD VIS A TETE FRAISEE	1					
29	6E5–11325–00	ANODE ANODE	1					
30	93210–08001	O-RING JOINT TORIQUE	1					
31	63P–13490–00	RELIEF VALVE ASSY SOUPAPE DE SECURITE COMPLET	1					
32	6DA–42744–00	STAY SUPPORT	1					
33	6DA–42662–01	DAMPER AMORTISSEUR	1					
34	90105–06039	BOLT, FLANGE BOULON, A COLLERETTE	3					

FIG. 4 CRANKSHAFT & PISTON — VILEBREQUIN & PISTON

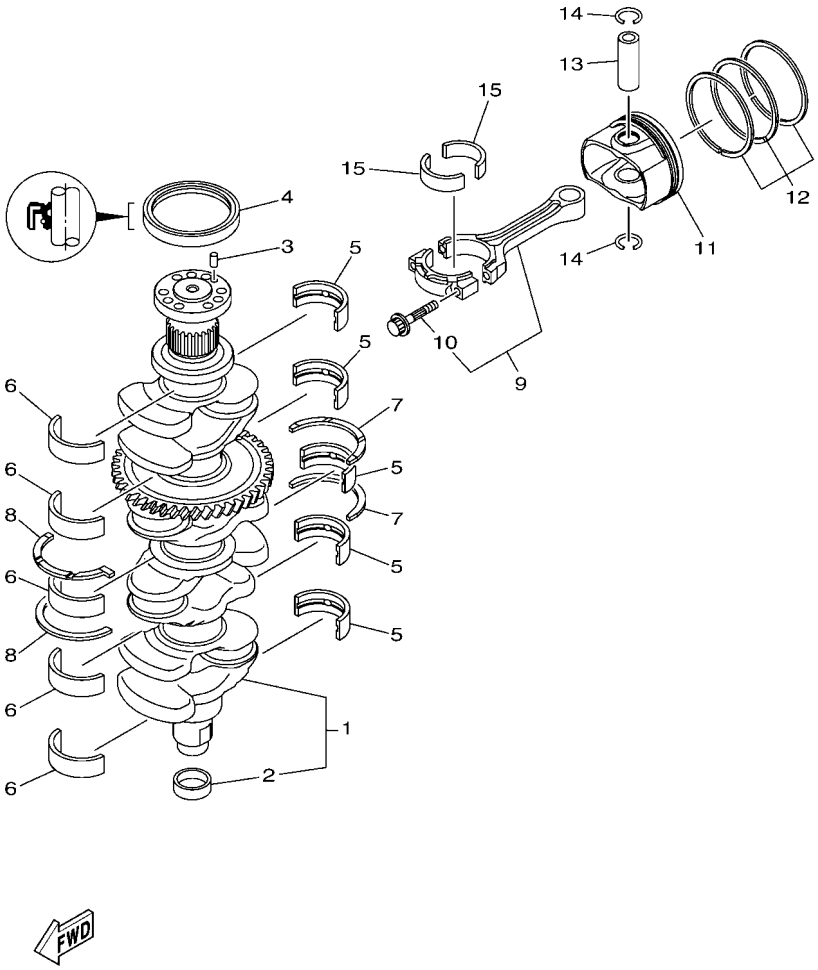

REF. NO.	PART NO. N° PIECES	DESCRIPTION DESCRIPTION	6LY4					REMARKS REMARQUES
1	6DA–11410–00	CRANKSHAFT VILEBREQUIN COMPLET	1					
2	6CB–11478–00	.COLLAR .COLLERETTE	1					
3	93606–12019	PIN, DOWEL GOUPILLE	1					
4	93102–85008	OIL SEAL JOINT SPY	1					
5	6DA–11416–00	PLANE BEARING, CRANKSHAFT 1 COUSSINET DE VILEBREQUIN 1	5					UR YELLOW UR YELLOW
	6DA–11416–10	PLANE BEARING, CRANKSHAFT 1 COUSSINET DE VILEBREQUIN 1	5					UR GREEN UR GREEN
	6DA–11416–20	PLANE BEARING, CRANKSHAFT 1 COUSSINET DE VILEBREQUIN 1	5					UR BLUE UR BLUE
6	6DA–11417–00	PLANE BEARING, CRANKSHAFT 2 COUSSINET DE VILEBREQUIN 2	5					UR YELLOW UR YELLOW
	6DA–11417–10	PLANE BEARING, CRANKSHAFT 2 COUSSINET DE VILEBREQUIN 2	5					UR GREEN UR GREEN
	6DA–11417–20	PLANE BEARING, CRANKSHAFT 2 COUSSINET DE VILEBREQUIN 2	5					UR BLUE UR BLUE
7	6DA–11426–00	BEARING, THRUST 1 ROULEMENT DE BUTEE 1	2					
8	6DA–11427–00	BEARING, THRUST 2 ROULEMENT DE BUTEE 2	2					
9	6CB–W1165–10	CONNECTING ROD ASSY BIELLE COMPLETTE	4					
10	63P–11654–10	.BOLT, CONNECTING ROD .BOULON, BIELLE	2					
11	6DA–11631–21–94	PISTON (STD) PISTON (STD)	4					
12	6CB–11603–00	PISTON RING SET (STD) JEU DE SEGMENTS (STD)	4					
13	6CB–11633–00	PIN, PISTON AXE, PISTON	4					
14	K0F–A3233–00	RING,HOLE SNAP JONC	8					
15	6JD–11656–00	PLANE BEARING, CONNECTING ROD ROULEMENT DE BIELLE	8					UR BLACK UR BLACK
	6JD–11656–10	PLANE BEARING, CONNECTING ROD ROULEMENT DE BIELLE	8					UR PINK UR PINK
	6JD–11656–20	PLANE BEARING, CONNECTING ROD ROULEMENT DE BIELLE	8					UR RED UR RED

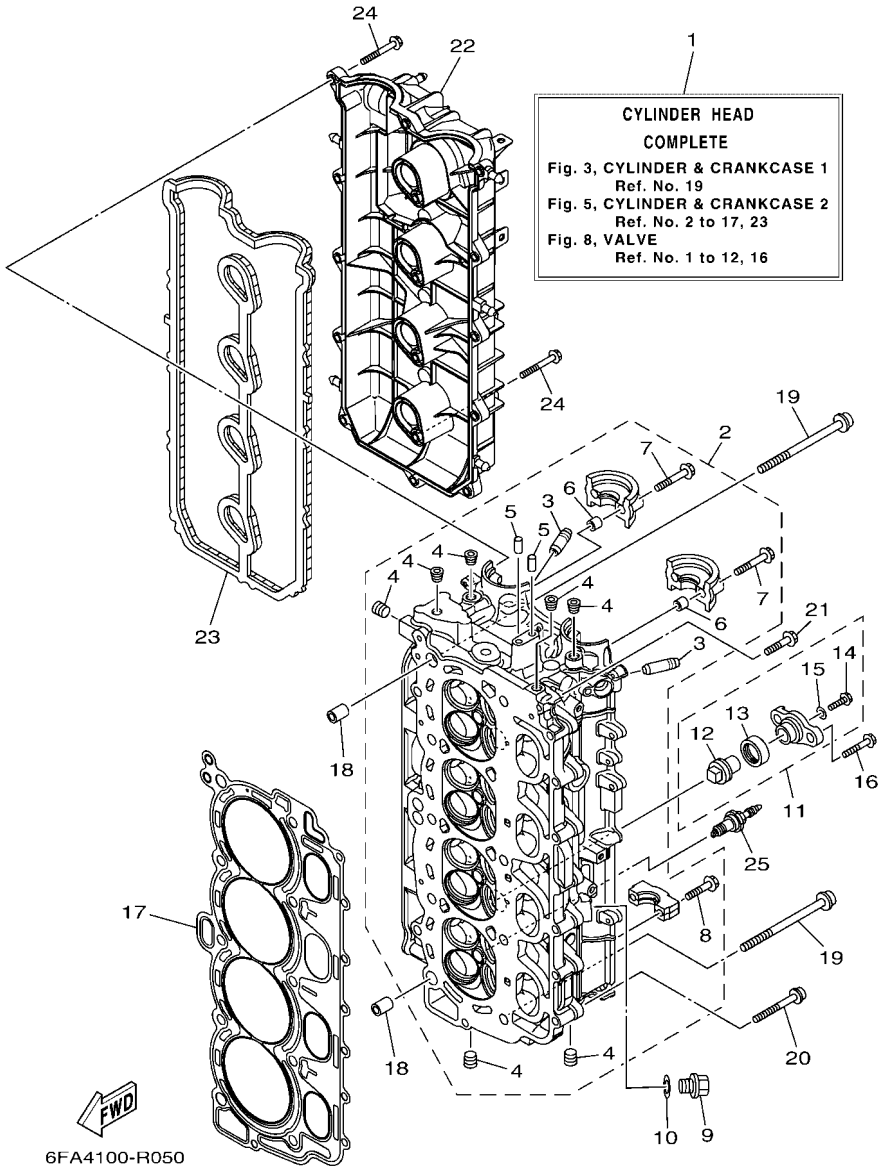

FIG. 5 CYLINDER & CRANKCASE 2 — CYLINDRE & CARTER 2

REF. NO.	PART NO. N° PIECES	DESCRIPTION DESCRIPTION	6LY4					REMARKS REMARQUES
1	6FA–W009A–05–9S	CYLINDER HEAD COMPLETE CULASSE (ENS.)	1					
2	6FA–11110–02–9S	CYLINDER HEAD ASSY JEU DE CULASSE	1					
3	6DA–11133–10	.GUIDE, VALVE 1 .GUIDE, SOUPAPE 1	16					
4	90344–51019	.PLUG, TAPER SCREW .PLOT, FILETE CONIQUE	7					
5	93606–12019	.PIN, DOWEL .GOUPILLE	2					
6	91809–08006	.PIN, DOWEL .GOUJON, D'ASSEMBLAGE	4					
7	90119–07001	.BOLT, WITH WASHER .BOULON, AVEC RONDELLE	4					
8	90119–07234	.BOLT, WITH WASHER .BOULON, AVEC RONDELLE	16					
9	90340–14M06	PLUG, STRAIGHT SCREW PLOT, FILETE DROIT	1					
10	90430–14115	GASKET JOINT	1					
11	6ML–11301–00	ANODE COVER ASSY COUVERCLE ANODE (ENS.)	2					
12	6ML–11325–00	.ANODE .ANODE	1					
13	67F–11328–01	.GROMMET, ANODE .PASSE-FIL	1					
14	90105–06M07	.BOLT, FLANGE .BOULON, A COLLERETTE	1					
15	90430–06M03	.GASKET .JOINT	1					
16	95D95–08025	BOLT, FLANGE DEEP RECESS BOULON FIXATION	4					
17	6DA–11181–00	GASKET, CYLINDER HEAD 1 JOINT, DE CULASSE 1	1					
18	90387–11005	COLLAR COLLERETTE	2					
19	90149–11001	SCREW VIS	10					
20	90105–08175	BOLT, FLANGE BOULON, A COLLERETTE	8					
21	90105–06151	BOLT, FLANGE BOULON, A COLLERETTE	1					
22	6DA–11191–00	COVER, CYLINDER HEAD 1 COUVERCLE, CULASSE 1	1					
23	6DA–11193–00	GASKET, HEAD COVER 1 JOINT, COUVERCLE DE CULASSE 1	1					
24	95D95–06030	BOLT, FLANGE DEEP RECESS BOULON FIXATION	16					
25	94702–00400	PLUG, SPARK (NGK LFR6A-11) BOUGIE D'ALLUMAGE(NGK LFR6A-11	4					

FIG. 6 CYLINDER & CRANKCASE 3 — CYLINDRE & CARTER 3

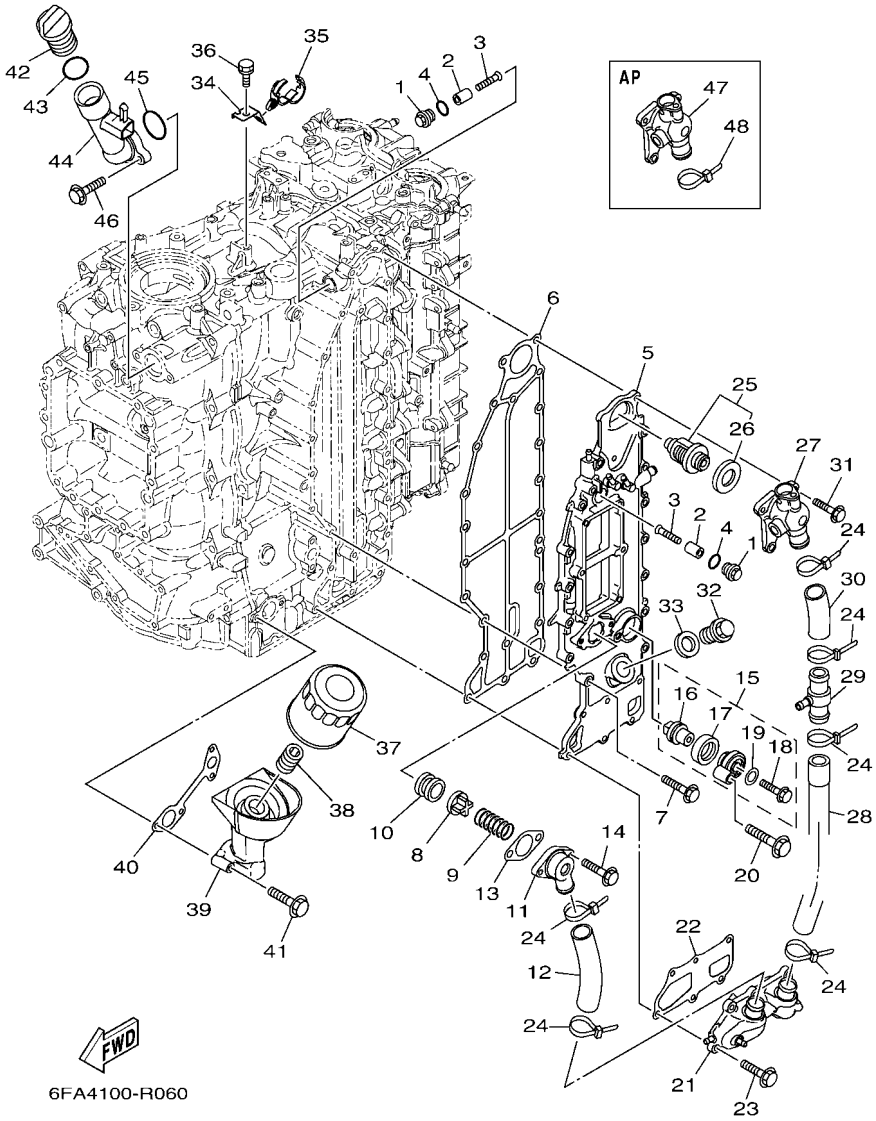

REF. NO.	PART NO. N° PIECES	DESCRIPTION DESCRIPTION	6LY4					REMARKS REMARQUES
1	6G8–11197–B0	PLUG, BLIND PLOT, BORGNE	2					
2	68T–11325–00	ANODE ANODE	2					
3	90151–05M05	SCREW, COUNTERSUNK VIS, TETE NOYEE	2					
4	93210–13M63	O-RING JOINT TORIQUE	2					
5	6DA–41113–00–9S	OUTER COVER, EXHAUST COUVERCLE, ECHAPPEMENT	1					
6	6DA–41114–01	GASKET, EXHAUST OUTER COVER JOINT, COUVERCLE D'ECHAPPEMENT	1					
7	90105–06028	BOLT, FLANGE BOULON, A COLLERETTE	14					
8	60H–12416–00	VALVE, PRESSURE CONTROL SOUPAPE DE CONTROLEUR PRESS	1					
9	90501–16M11	SPRING, COMPRESSION RESSORT, COMPRESSION	1					
10	90480–20M05	GROMMET PASSE-FIL	1					
11	6G5–11372–00	COVER, BYPASS 2 CONVERCLE	1					
12	6DA–1243A–00	HOSE 1 DURITE 1	1					
13	60V–11382–A0	GASKET 2 JOINT 2	1					
14	90119–06MA3	BOLT, WITH WASHER BOULON, AVEC RONDELLE	2					
15	69J–11301–02	ANODE COVER ASSY COUVERCLE ANODE (ENS.)	1					
16	6ML–11325–00	.ANODE .ANODE	1					
17	67F–11328–01	.GROMMET, ANODE .PASSE-FIL	1					
18	90105–06M07	.BOLT, FLANGE .BOULON, A COLLERETTE	1					
19	90430–06M03	.GASKET .JOINT	1					
20	97E75–08540	BOLT, HEXAGON W/W DEEP RECESS VIS HEXAGONAL AVC RONDELLE	1					
21	6DA–12527–00–9S	COVER, WATER BY-PASS CACHE, DERIVATHION D'EAU	1					
22	6DA–11381–01	GASKET 1 JOINT 1	1					
23	90105–06028	BOLT, FLANGE BOULON, A COLLERETTE	6					
24	90465–11M59	CLAMP BRIDE	6					
25	6DA–12411–01	THERMOSTAT THERMOSTAT	1					
26	6AW–12412–00	.SEAL, THERMOSTAT .JOINT, THERMOSTAT	1					
27	6DA–12413–B0–9S	COVER, THERMOSTAT COUVERCLE, THERMOSTAT	1					

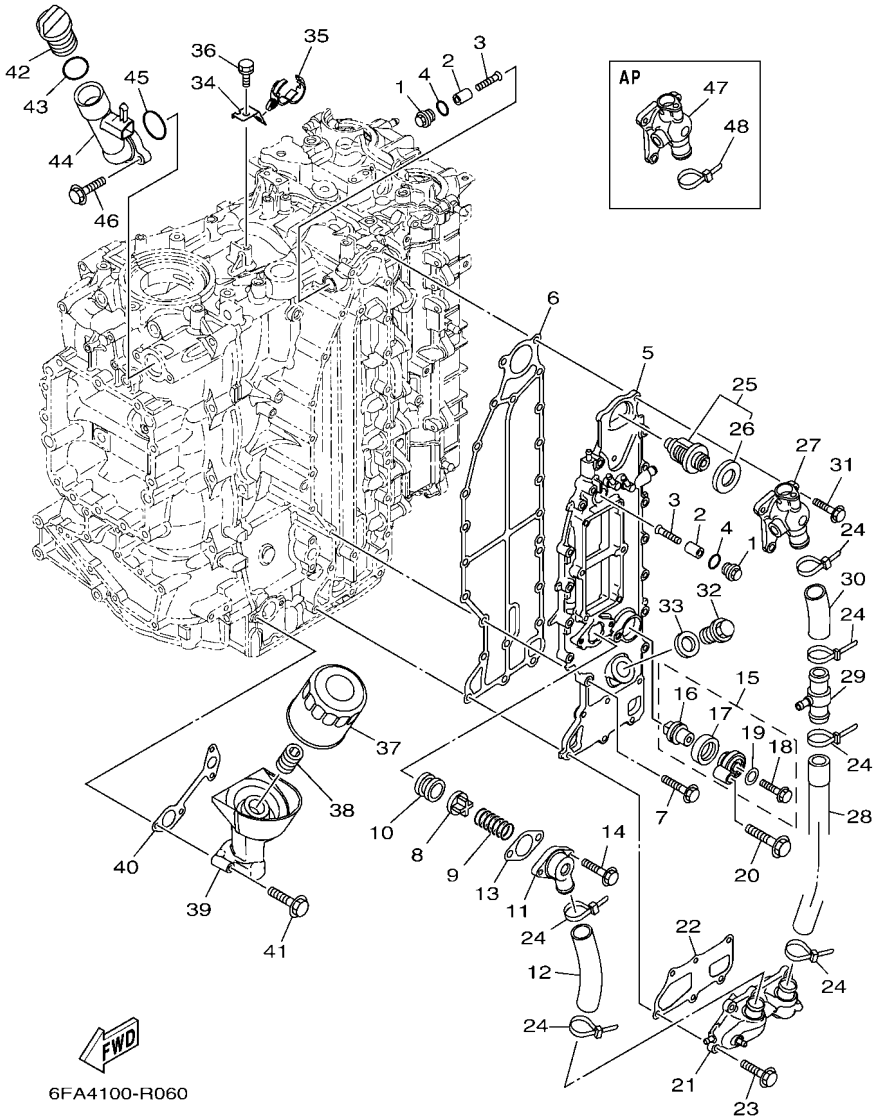

FIG. 6 CYLINDER & CRANKCASE 3 — CYLINDRE & CARTER 3

REF. NO.	PART NO. N° PIECES	DESCRIPTION DESCRIPTION	6LY4					REMARKS REMARQUES
28	6DA–1243E–00	HOSE 2 DURITE 2	1					
29	6CE–24378–00	PIPE, JOINT 3 DURITE RACCORDEMENT 3	1					
30	6DA–1244H–00	HOSE 5 DURITE 5	1					
31	90105–06028	BOLT, FLANGE BOULON, A COLLERETTE	3					
32	90340–18M09	PLUG, STRAIGHT SCREW PLOT, FILETE DROIT	1					
33	90201–186F1	WASHER, PLATE RONDELLE, PLATE	1					
34	6DA–12491–00	CLAMP 1 COLLIER 1	1					
35	90464–20181	CLAMP BRIDE	1					
36	90119–06078	BOLT, WITH WASHER BOULON, AVEC RONDELLE	1					
37	69J–13440–05	ELEMENT ASSY, OIL CLEANER ELEMENT, FILTRE A HUILE	1					
38	6S5–12858–00	BOLT, UNION BOULON, RACCORD	1					
39	6DA–13446–01	CONNECTOR CONNECTEUR	1					
40	6DA–13475–00	GASKET JOINT	1					
41	90105–06151	BOLT, FLANGE BOULON, A COLLERETTE	4					
42	6G8–15363–00	PLUG, OIL PLOT, HUILE	1					
43	93210–24M79	O-RING JOINT TORIQUE	1					
44	6DA–15319–00	JOINT JOINT	1					
45	93210–357A3	O-RING JOINT TORIQUE	1					
46	90105–06037	BOLT, FLANGE BOULON, A COLLERETTE	2					
47	6DA–1241B–B0–9S	COVER, THERMOSTAT 2 COUVERCLE, THERMOSTAT 2	1					AP WATER TEMP SENSOR AP WATER TEMP SENSOR
48	90465–11M59	CLAMP BRIDE	1					AP WATER TEMP SENSOR AP WATER TEMP SENSOR

FIG. 7 CYLINDER & CRANKCASE 4 — CYLINDRE & CARTER 4

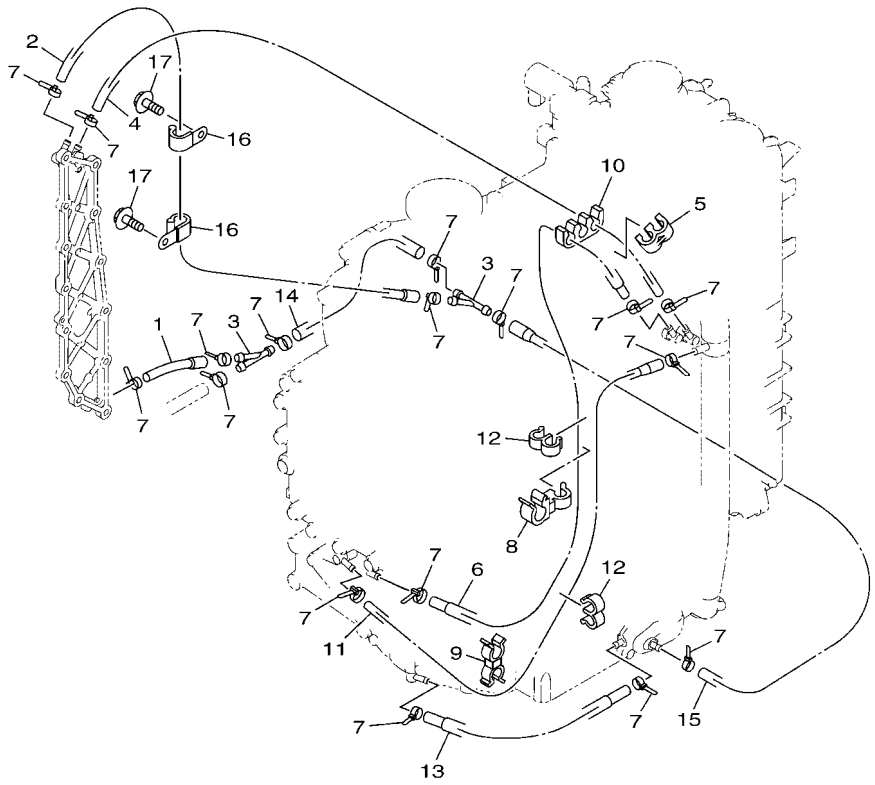

6EH5100-R070

REF. NO.	PART NO. N° PIECES	DESCRIPTION DESCRIPTION	6LY4					REMARKS REMARQUES
1	6DA–12576–00	HOSE 1 TUYAU 1	1					
2	6DA–12589–00	HOSE 6 TUYAU 6	1					
3	6CE–24377–00	PIPE, JOINT 2 DURITE RACCORDEMENT 2	2					
4	90445–09008	HOSE (L470) DURITE (L470)	1					
5	90464–09M21	CLAMP BRIDE	1					
6	6DA–12578–00	HOSE 3 TUYAU 3	1					
7	90465–11M10	CLAMP BRIDE	17					
8	90464–12010	CLAMP BRIDE	1					
9	90464–09142	CLAMP BRIDE	1					
10	90464–09020	CLAMP BRIDE	1					
11	6DA–12579–00	HOSE 4 TUYAU 4	1					
12	90464–09M31	CLAMP BRIDE	2					
13	6DA–12552–00	HOSE 8 DURITE 8	1					
14	90445–10057	HOSE (L170) DURITE (L170)	1					
15	6DA–12589–00	HOSE 6 TUYAU 6	1					
16	90465–08M83	CLAMP BRIDE	2					
17	95D95–06012	BOLT, FLANGE DEEP RECESS BOULON FIXATION	2					

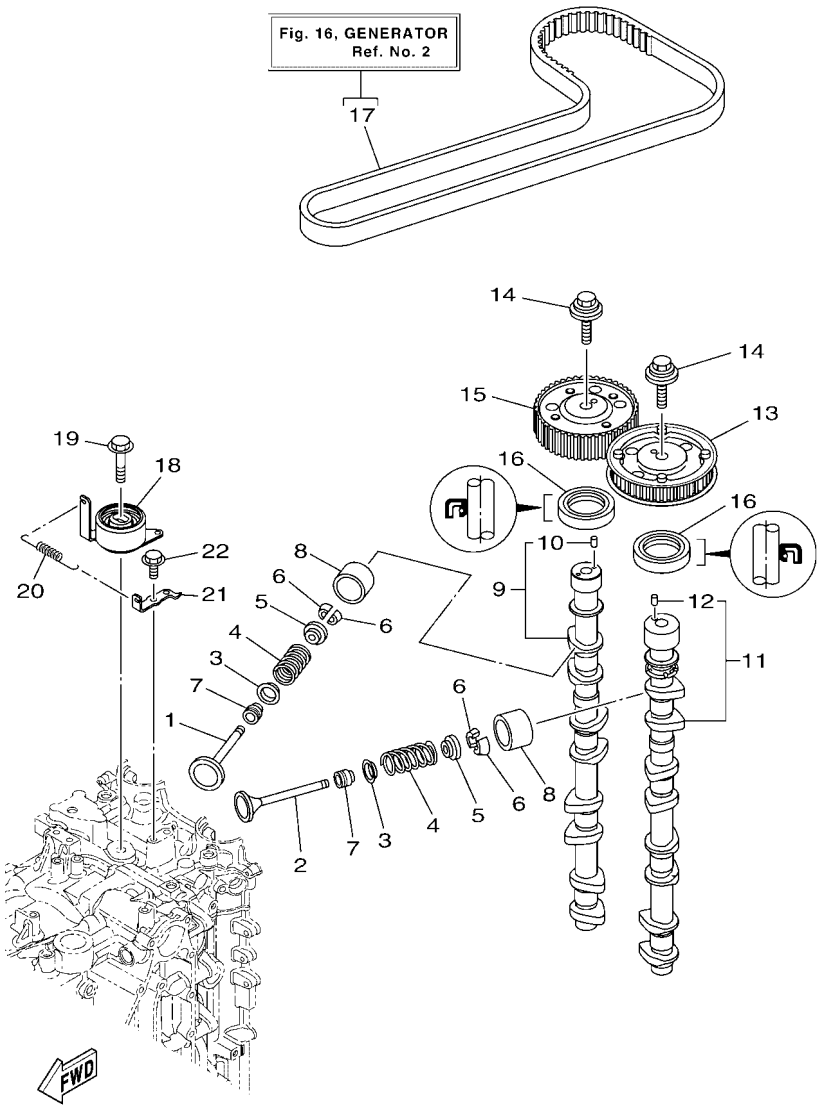

6FA1100-N080

FIG. 8 VALVE SOUPAPE

REF. NO.	PART NO. N° PIECES	DESCRIPTION DESCRIPTION	6LY4					REMARKS REMARQUES
1	6CB–12111–00	VALVE, INTAKE SOUPAPE, ADMISSION	8					
2	6DA–12121–00	VALVE, EXHAUST SOUPAPE, ECHAPPEMENT	8					
3	K0F–A3743–00	SEAT, VALVE SPRING SIEGE, RESSORT DE SOUPAPE	16					
4	6CB–12113–00	SPRING, VALVE INNER RESSORT DE SOUPAPE, INTERNE	16					
5	K0F–A3741–00	RETAINER, VALVE SPRING BUTEE DE RESSORT DE SOUPAPA	16					
6	K0F–A3742–00	LOCK, VALVE SPRING RETAINER FRAISE, SOUPAPE	32					
7	51Y–12119–00	SEAL, VALVE STEM JOINT, QUEUE DE SOUPAPE	16					
8	K0F–A3751–00	LIFTER, VALVE (3.000) LEVE-SOUPAPE (3.000)	16					UR UR
	K0F–A3751–10	LIFTER, VALVE (3.025) LEVE-SOUPAPE (3.025)	16					UR UR
	K0F–A3751–20	LIFTER, VALVE (3.050) LEVE-SOUPAPE (3.050)	16					UR UR
	K0F–A3751–30	LIFTER, VALVE (3.075) LEVE-SOUPAPE (3.075)	16					UR UR
	K0F–A3751–40	LIFTER, VALVE (3.100) LEVE-SOUPAPE (3.100)	16					UR UR
	K0F–A3751–50	LIFTER, VALVE (3.122) LEVE-SOUPAPE (3.122)	16					UR UR
	K0F–A3751–60	LIFTER, VALVE (3.142) LEVE-SOUPAPE (3.142)	16					UR UR
	K0F–A3751–70	LIFTER, VALVE (3.162) LEVE-SOUPAPE (3.162)	16					UR UR
	K0F–A3751–80	LIFTER, VALVE (3.182) LEVE-SOUPAPE (3.182)	16					UR UR
	K0F–A3751–90	LIFTER, VALVE (3.202) LEVE-SOUPAPE (3.202)	16					UR UR
	K0F–A3751–A0	LIFTER, VALVE (3.222) LEVE-SOUPAPE (3.222)	16					UR UR
	K0F–A3751–B0	LIFTER, VALVE (3.242) LEVE-SOUPAPE (3.242)	16					UR UR
	K0F–A3751–C0	LIFTER, VALVE (3.262) LEVE-SOUPAPE (3.262)	16					UR UR
	K0F–A3751–D0	LIFTER, VALVE (3.282) LEVE-SOUPAPE (3.282)	16					UR UR
	K0F–A3751–E0	LIFTER, VALVE (3.302) LEVE-SOUPAPE (3.302)	16					UR UR
	K0F–A3751–F0	LIFTER, VALVE (3.322) LEVE-SOUPAPE (3.322)	16					UR UR
	K0F–A3751–G0	LIFTER, VALVE (3.342) LEVE-SOUPAPE (3.342)	16					UR UR
	K0F–A3751–H0	LIFTER, VALVE (3.362) LEVE-SOUPAPE (3.362)	16					UR UR
	K0F–A3751–J0	LIFTER, VALVE (3.382) LEVE-SOUPAPE (3.382)	16					UR UR
	K0F–A3751–K0	LIFTER, VALVE (3.402) LEVE-SOUPAPE (3.402)	16					UR UR

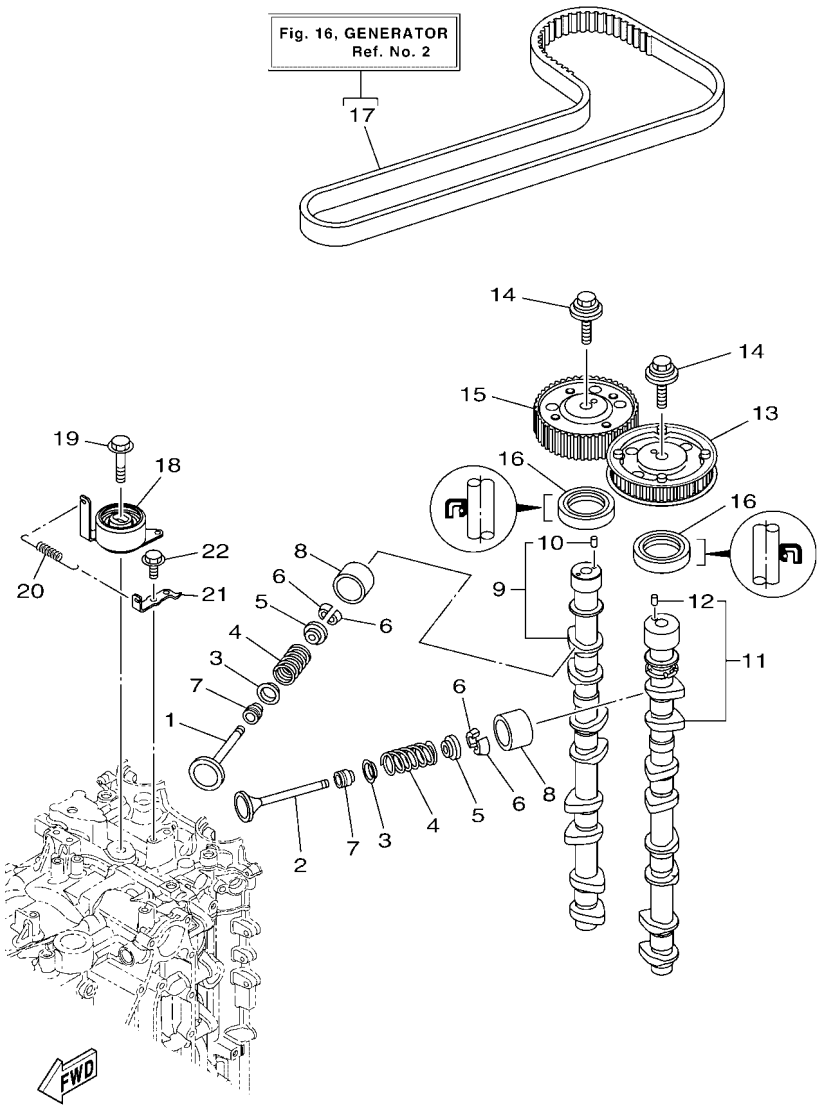

6FA1100-N080

FIG. 8 VALVE — SOUPAPE

REF. NO.	PART NO. N° PIECES	DESCRIPTION DESCRIPTION	6LY4					REMARKS REMARQUES
8	K0F–A3751–L0	LIFTER, VALVE (3.422) LEVE-SOUPAPE (3.422)	16					UR UR
	K0F–A3751–M0	LIFTER, VALVE (3.442) LEVE-SOUPAPE (3.442)	16					UR UR
	K0F–A3751–N0	LIFTER, VALVE (3.462) LEVE-SOUPAPE (3.462)	16					UR UR
	K0F–A3751–P0	LIFTER, VALVE (3.482) LEVE-SOUPAPE (3.482)	16					UR UR
	K0F–A3751–R0	LIFTER, VALVE (3.502) LEVE-SOUPAPE (3.502)	16					UR UR
	K0F–A3751–S0	LIFTER, VALVE (3.522) LEVE-SOUPAPE (3.522)	16					UR UR
	K0F–A3751–T0	LIFTER, VALVE (3.542) LEVE-SOUPAPE (3.542)	16					UR UR
	K0F–A3753–00	LIFTER, VALVE (3.562) LEVE-SOUPAPE (3.562)	16					UR UR
	K0F–A3753–10	LIFTER, VALVE (3.582) LEVE-SOUPAPE (3.582)	16					UR UR
	K0F–A3753–20	LIFTER, VALVE (3.602) LEVE-SOUPAPE (3.602)	16					UR UR
	K0F–A3753–30	LIFTER, VALVE (3.625) LEVE-SOUPAPE (3.625)	16					UR UR
	K0F–A3753–40	LIFTER, VALVE (3.650) LEVE-SOUPAPE (3.650)	16					UR UR
	K0F–A3753–50	LIFTER, VALVE (3.675) LEVE-SOUPAPE (3.675)	16					UR UR
	K0F–A3753–60	LIFTER, VALVE (3.700) LEVE-SOUPAPE (3.700)	16					UR UR
	K0F–A3753–70	LIFTER, VALVE (3.725) LEVE-SOUPAPE (3.725)	16					UR UR
9	6FA–12171–01	CAMSHAFT 1 ARBRE A CAMES 1	1					
10	93605–10108	.PIN, DOWEL .AXE	1					
11	6DA–12181–02	CAMSHAFT 2 ARBRE A CAMES 2	1					
12	93605–10108	.PIN, DOWEL .AXE	1					
13	6FA–115A0–00	DRIVEN GEAR ASSY CLOCHE D'EMBRAYAGE	1					
14	90119–10050	BOLT, WITH WASHER BOULON, AVEC RONDELLE	2					
15	6FA–11567–00	GEAR, DRIVEN 2 PIGNON SECONDAIRE 2	1					
16	93102–38008	OIL SEAL JOINT SPY	2					
17	6DA–W4624–00	BELT (WITH ROTOR BOLTS) COURROIE (AVEC BOULON)	1					
18	6DA–11590–00	TENSIONER ASSY TENDEUR (ENS.)	1					
19	90119–10M07	BOLT, WITH WASHER BOULON, AVEC RONDELLE	1					
20	90506–18025	SPRING, TENSION RESSORT, TENSION	1					

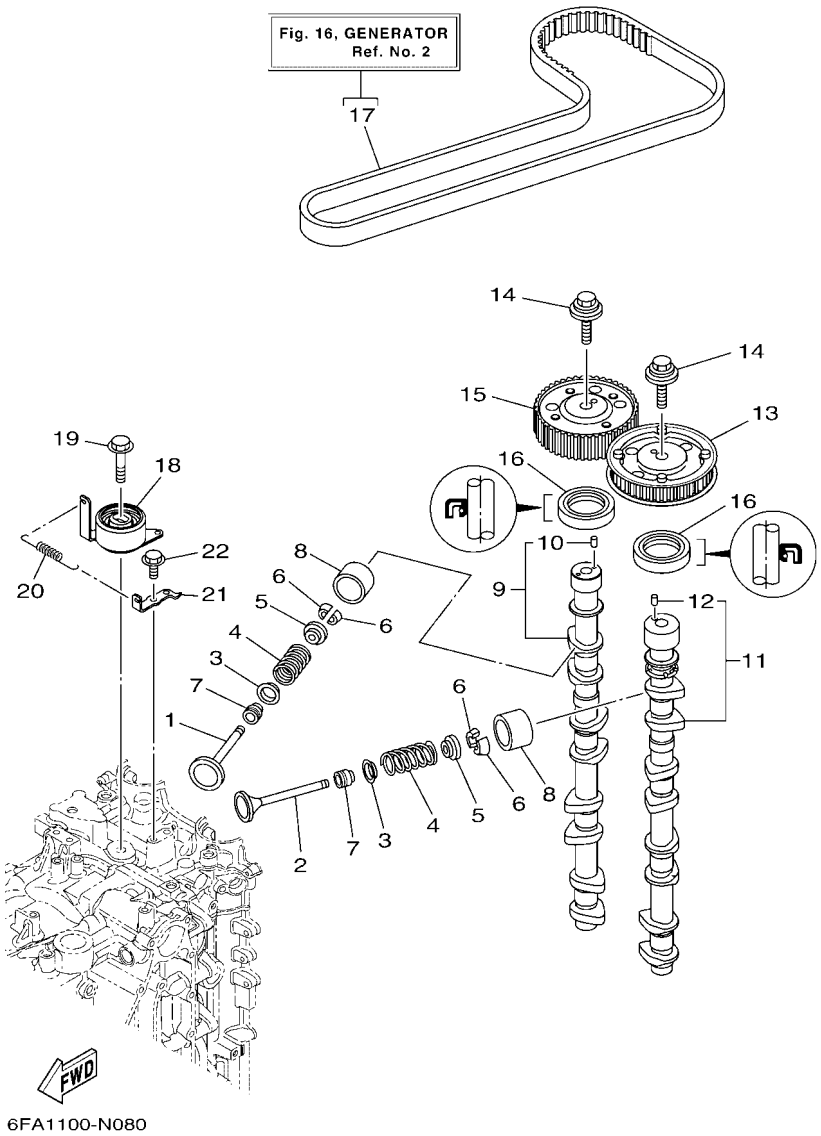

FIG. 8 VALVE — SOUPAPE

REF. NO.	PART NO. N° PIECES	DESCRIPTION DESCRIPTION	6LY4					REMARKS REMARQUES
21	6DA–11595–00	PLATE,VALVE PLAQUE DE SOUPAPE	1					
22	97E75–06516	BOLT, HEXAGON W/W DEEP RECESS VIS HEXAGONAL AVC RONDELLE	1					

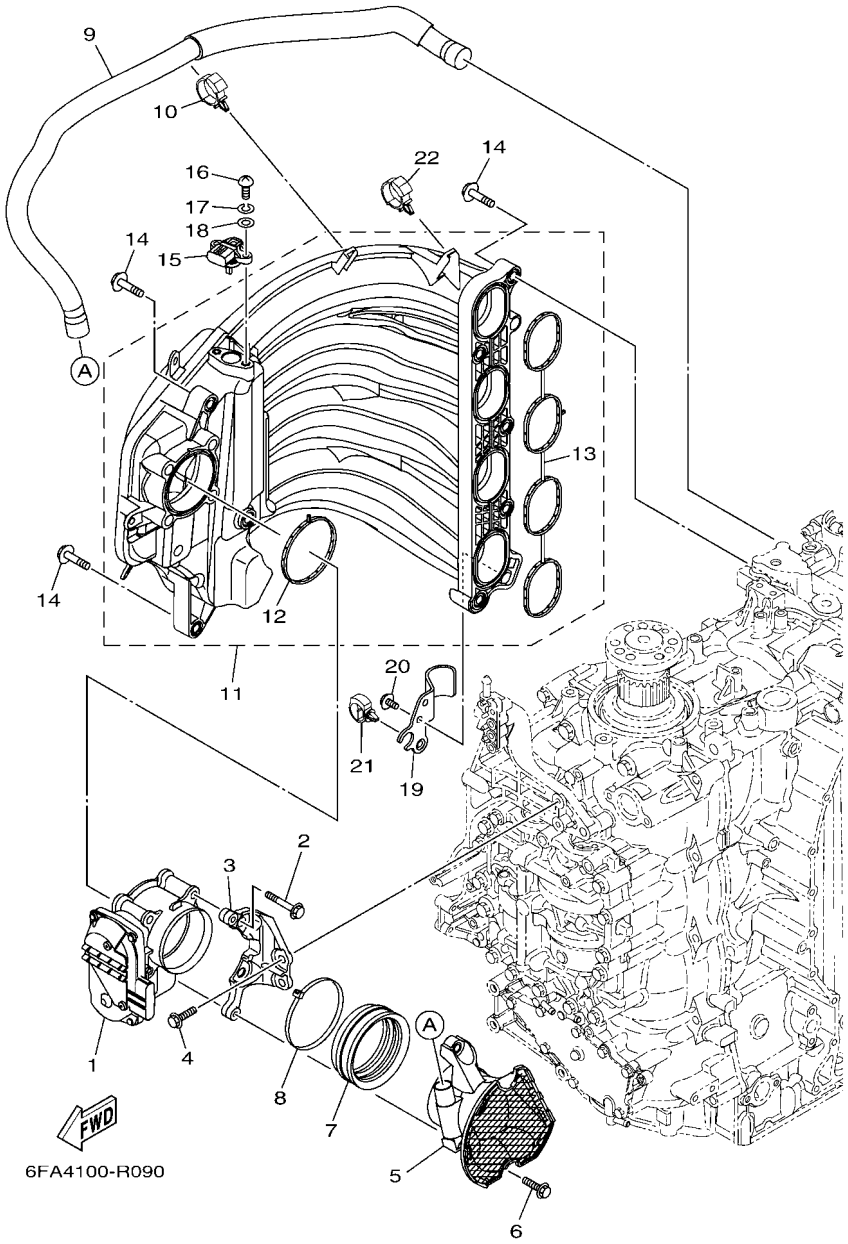

FIG. 9 INTAKE 1 — ADMISSION 1

REF. NO.	PART NO. N° PIECES	DESCRIPTION DESCRIPTION	6LY4					REMARKS REMARQUES
1	6DA–13751–02	BODY, THROTTLE 1 CARTER 1	1					
2	97E75–08560	BOLT, HEXAGON W/W DEEP RECESS VIS HEXAGONAL AVC RONDELLE	4					
3	6DA–13152–00	STAY 2 SUPPORT2	1					
4	95D75–06025	BOLT, FLANGE DEEP RECESS BOULON FIXATION	2					
5	6DA–14440–00	SILENCER ASSY, INTAKE SIENCIEUX D'ADMISSION	1					
6	95D75–06025	BOLT, FLANGE DEEP RECESS BOULON FIXATION	2					
7	6P2–1441J–01	PIPE, SILENCER DURITE, DE SILENCIEUX	1					
8	90464–99004	CLAMP BRIDE	1					
9	6DA–15373–00	PIPE, BREATHER DURITE DE RENIFLARD	1					
10	90464–12183	CLAMP BRIDE	1					
11	6DA–13641–00	MANIFOLD, INTAKE 1 TUBULURE, ADMISSION 1	1					
12	6DA–13646–00	.GASKET, MANIFOLD 2 .JOINT, TUBULURE 2	1					
13	6DA–13645–00	.GASKET, MANIFOLD 1 .JOINT, TUBULURE 1	1					
14	90119–08020	BOLT, WITH WASHER BOULON, AVEC RONDELLE	9					
15	68F–83688–10	SENSOR ASSY SONDE (ENS.)	1					
16	97885–05016	SCREW, PAN HEAD VIS, A ENCOCHE	2					
17	92995–05100	WASHER RONDELLE	2					
18	92995–05600	WASHER RONDELLE	2					
19	6DA–13881–00	COVER 1 COUVERCLE 1	1					
20	95D95–06012	BOLT, FLANGE DEEP RECESS BOULON FIXATION	2					
21	90464–20181	CLAMP BRIDE	1					
22	90464–12183	CLAMP BRIDE	1					

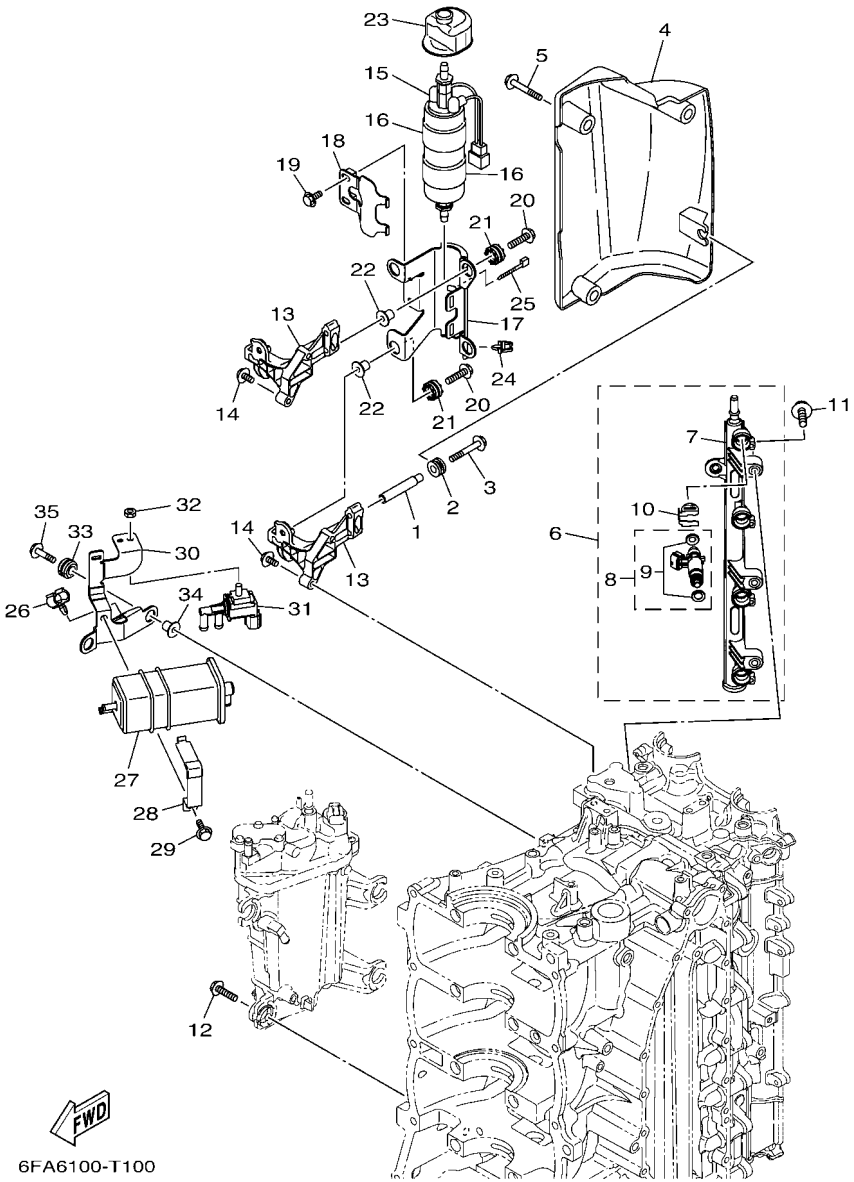

FIG. 10 INTAKE 2 — ADMISSION 2

REF. NO.	PART NO. N° PIECES	DESCRIPTION DESCRIPTION	6LY4					REMARKS REMARQUES
1	90387–06283	COLLAR COLLERETTE	1					
2	90480–12314	GROMMET PASSE-FIL	1					
3	90105–06054	BOLT, FLANGE BOULON, A COLLERETTE	1					
4	6DA–13564–01	COVER, MANIFOLD COUVERCLE, TUBULURE	1					
5	95D95–06020	BOLT, FLANGE DEEP RECESS BOULON FIXATION	3					
6	6DA–13160–02	DELIVERY PIPE ASSY 1 ENS. TUBE DE REFOULEMENT 1	1					
7	6DA–13161–02	.PIPE, DELIVERY 1 .DURITE REFOULEMENT 1	1					
8	6DA–13761–01	.INJECTOR .INJECTEUR	4					
9	6AW–1410B–00	..PACKING KIT ..POCHETTE DE JOINTS	1					
10	6AW–13577–10	.CLIP .AGRAFE	4					
11	90105–06M08	BOLT, FLANGE BOULON, A COLLERETTE	3					
12	90119–06299	BOLT, WITH WASHER BOULON, AVEC RONDELLE	4					
13	6DA–24425–00	BRACKET, FUEL PUMP 1 SUPPORT, POMPE A ESSENCE 1	2					
14	90105–06M08	BOLT, FLANGE BOULON, A COLLERETTE	4					
15	6GR–24410–02	FUEL PUMP ASSY POMPE A ESSENCE	1					
16	6DA–24492–01	BUSH, FUEL PUMP BAGUE	2					
17	6DA–24491–00	BRACKET, FUEL PUMP SUPPORT, POMPE A ESSENCE	1					
18	6DA–24426–00	BRACKET, FUEL PUMP 2 SUPPORT, POMPE A ESSENCE 2	1					
19	95D95–06012	BOLT, FLANGE DEEP RECESS BOULON FIXATION	2					
20	90119–06309	BOLT, WITH WASHER BOULON, AVEC RONDELLE	4					
21	60V–85516–00	SPACER ENTRETOISE	4					
22	90387–06289	COLLAR COLLERETTE	4					
23	6DA–24462–00	CAP, BLIND COUVERCLE, BORGNE	1					
24	90464–11121	CLAMP BRIDE	1					
25	90465–11M10	CLAMP BRIDE	1					
26	90464–09130	CLAMP BRIDE	1					
27	6P2–24170–00	CANISTER ASSY BANDE, RASERVOIR A ESSENCE	1					

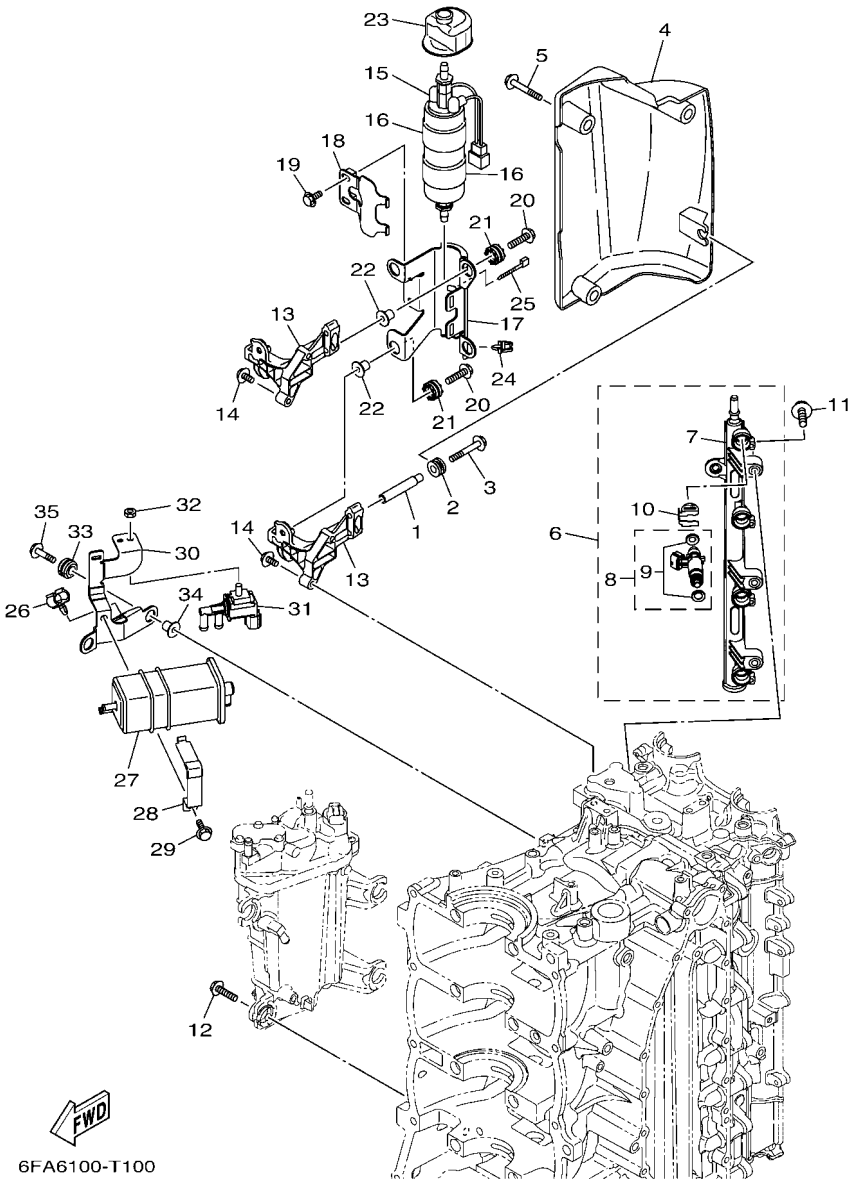

FIG. 10 INTAKE 2 — ADMISSION 2

REF. NO.	PART NO. N° PIECES	DESCRIPTION DESCRIPTION	6LY4					REMARKS REMARQUES
28	63P–2419A–01	HOLDER SUPPORT	1					
29	95D95–06016	BOLT, FLANGE DEEP RECESS BOULON FIXATION	1					
30	6DA–2134X–00	BRACKET, CANISTER SUPPORT	1					
31	6C5–86120–00	SOLENOID VALVE ASSY SOLENOIDE	1					
32	95380–06600	NUT, HEXAGON ECROU	1					
33	90480–14031	GROMMET PASSE-FIL	2					
34	90387–06289	COLLAR COLLERETTE	2					
35	90119–06309	BOLT, WITH WASHER BOULON, AVEC RONDELLE	2					

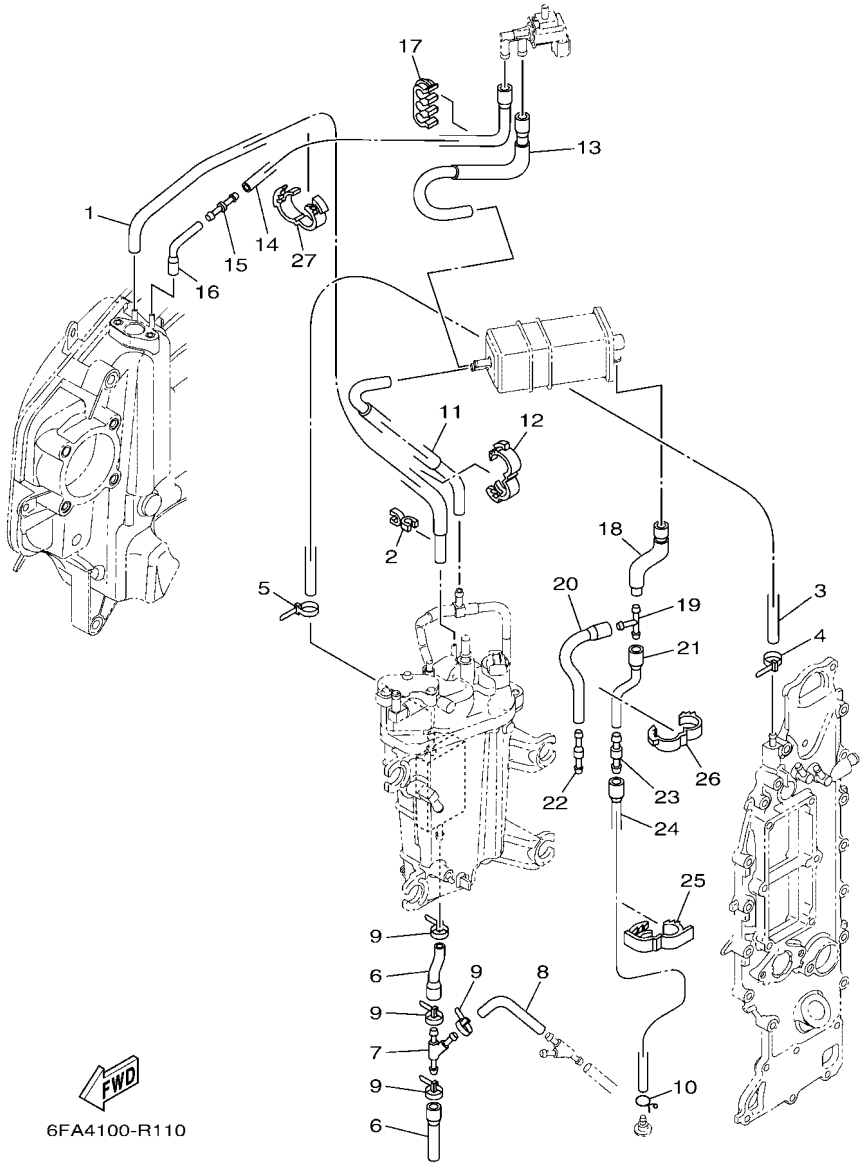

FIG. 11 INTAKE 3 — ADMISSION 3

REF. NO.	PART NO. N° PIECES	DESCRIPTION DESCRIPTION	6LY4					REMARKS REMARQUES
1	6DA–13532–00	HOSE, VACUUM SENSING 3 DURITE 3	1					
2	90464–07M41	CLAMP BRIDE	1					
3	90445–09120	HOSE (L600) DURITE (L600)	1					
4	90465–11M10	CLAMP BRIDE	1					
5	90465–11M10	CLAMP BRIDE	1					
6	6DA–12576–00	HOSE 1 TUYAU 1	2					
7	6CE–24377–00	PIPE, JOINT 2 DURITE RACCORDEMENT 2	1					
8	90445–10056	HOSE (L85) DURITE (L85)	1					
9	90465–11M10	CLAMP BRIDE	4					
10	90467–09M09	CLIP JONC	1					
11	6DA–1475A–00	PIPE 1 DURITE 1	1					
12	90464–16001	CLAMP BRIDE	1					
13	6DA–1475F–00	PIPE 3 DURITE 3	1					
14	6DA–2416A–00	HOSE DURITE	1					
15	6CB–14989–00	ORIFICE, AIR VENT OR1F1CE	1					
16	6DA–1475G–00	PIPE 4 DURITE 4	1					
17	90464–10011	CLAMP BRIDE	1					
18	6DA–13545–00	HOSE 1 DURITE 1	1					
19	688–24378–00	PIPE, JOINT 3 DURITE RACCORDEMENT 3	1					
20	68V–13546–10	HOSE 2 DURITE 2	1					
21	6FA–13548–00	HOSE, AIR 4 DURITE, A AIR 4	1					
22	6E5–21744–00	BREATHER RENIFLARD	1					
23	63D–21744–00	BREATHER RENIFLARD	1					
24	6FA–13547–00	HOSE 3 DURITE 3	1					
25	90464–18004	CLAMP BRIDE	1					
26	90464–16001	CLAMP BRIDE	1					
27	90464–16001	CLAMP BRIDE	1					

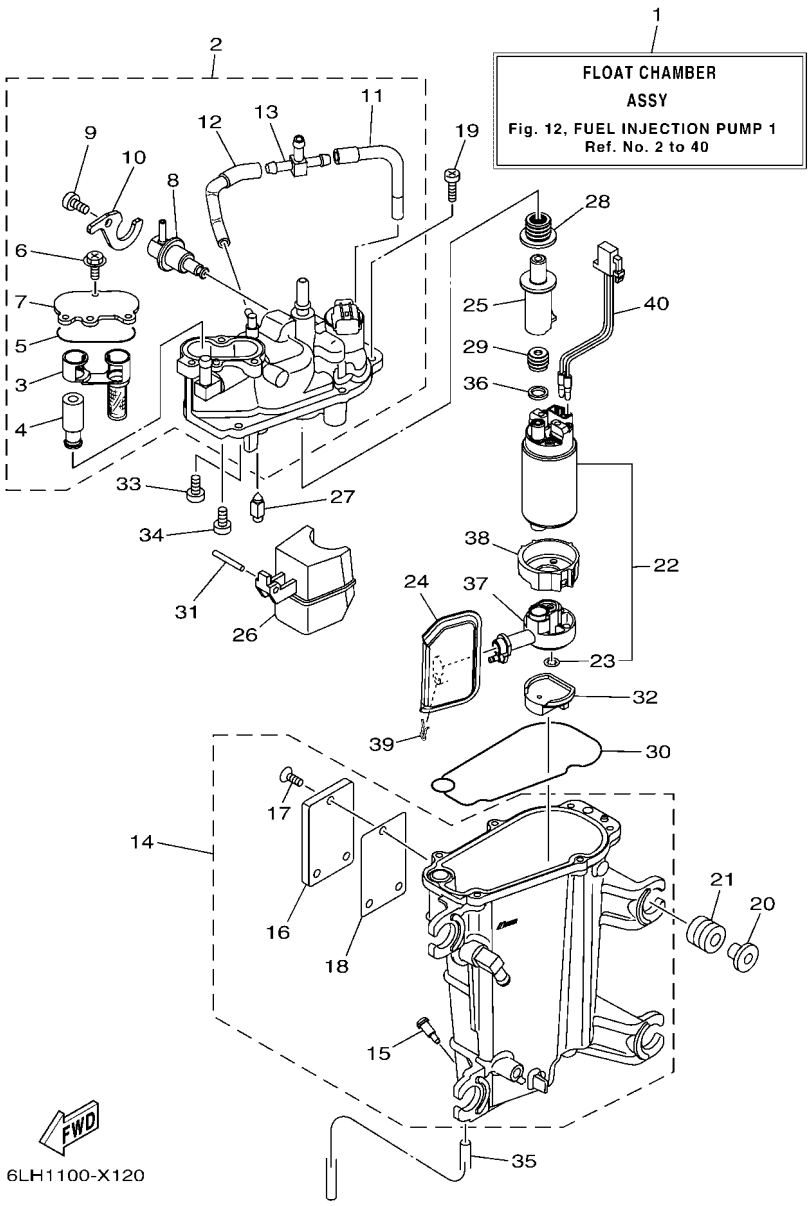

FIG. 12 FUEL INJECTION PUMP 1 — POMPE A INJECTEUR 1

REF. NO.	PART NO. N° PIECES	DESCRIPTION DESCRIPTION	6LY4					REMARKS REMARQUES
1	6LH–14180–00	FLOAT CHAMBER ASSY CUVE DE FLOTTEUR	1					
2	6DA–14182–00	COVER, FLOAT CHAMBER COUVERCLE, CUVE DE FLOTTEUR	1					
3	6CB–24501–01	.FILTER, FUEL .FILTRE	1					
4	6CB–24460–00	.RELIEF VALVE ASSY .SOUPAPE DE SECURITE COMPLET	1					
5	6CB–13016–00	.O-RING .JOINT TORIQUE	1					
6	6CB–14216–00	.SCREW .VIS	3					
7	6CB–24217–00	.COVER .COUVERCLE	1					
8	6CB–13906–01	.REGULATOR, PRESSURE .REGULATEUR DE PRESSION	1					
9	6CB–14564–00	.SCREW .VIS	1					
10	6DA–14146–00	.PLATE .PLAQUE	1					
11	6DA–13892–00	.HOSE, AIR 2 .DURITE, A AIR 2	1					
12	6DA–13893–00	.HOSE, AIR 3 .DURITE, A AIR 3	1					
13	69J–24379–00	.PIPE, JOINT 4 .DURITE RACCORDEMENT 4	1					
14	6LH–14181–00	BODY, FLOAT CHAMBER 1 CORPS, CUVE DE FLOTTEUR 1	1					
15	6P2–14191–00	.PLUG, DRAIN .PLOT, VIDANGE	1					
16	6EK–24452–00	.COVER .COUVERCLE	1					
17	6K8–14591–10	.SCREW .VIS	3					
18	6CB–24482–00	.GASKET 1 .JOINT 1	1					
19	63P–14567–00	SCREW VIS	6					
20	63P–13716–00	COLLAR COLLERETTE	4					
21	6CB–13593–00	DAMPER AMORTISSEUR	4					
22	6LH–W1390–00	FUEL PUMP KIT KIT POMPE A CARBURANT	1					
23	6C5–14127–10	.CLIP .JONC	1					
24	6LH–13915–00	FILTER FILTRE	1					
25	6LH–13132–00	JOINT RACCORD	1					
26	6CB–14985–00	FLOAT FLOTTEUR	1					
27	6CB–14546–00	VALVE, NEEDLE POINTEAU	1					

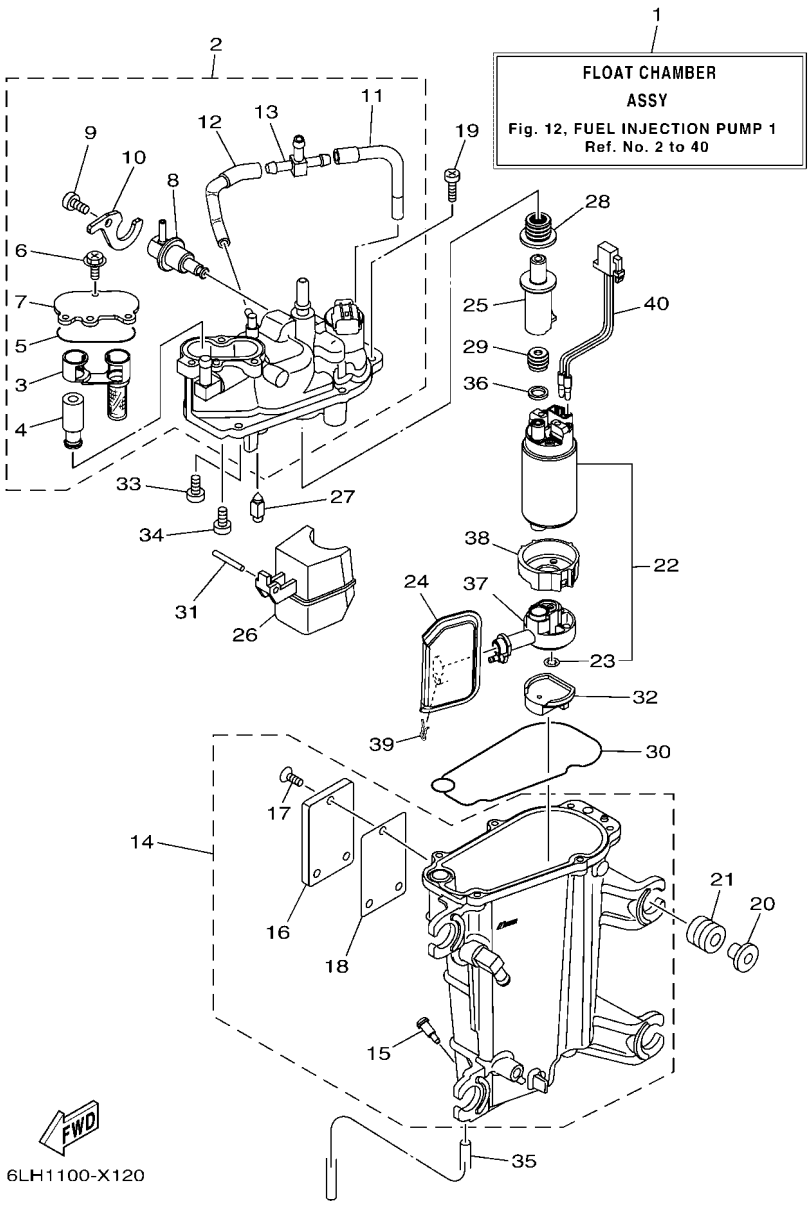

FIG. 12 FUEL INJECTION PUMP 1 — POMPE A INJECTEUR 1

REF. NO.	PART NO. N° PIECES	DESCRIPTION DESCRIPTION	6LY4					REMARKS REMARQUES
28	6LH–1447B–00	BUSH 1 DOUILLE 1	1					
29	6LH–13781–00	DAMPER, PUMP AMORTISSEUR, POMPE	1					
30	6CB–14984–00	GASKET, FLOAT CHAMBER JOINT, CUVE DE FLOTTEUR	1					
31	6P2–14386–00	PIN, FLOAT AXE, FLOTTEUR	1					
32	6LH–13784–00	COVER, PUMP COUVERCLE, POMPE	1					
33	4SV–24453–00	SCREW VIS	1					
34	98507–04008	SCREW, PAN HEAD VIS, TETE TRONCONIQUE	1					
35	6P2–14149–00	PIPE DURITE	1					
36	6LH–13716–00	COLLAR COLLERETTE	1					
37	6LH–13938–00	PIPE DURITE	1					
38	6LH–24492–00	BUSH, FUEL PUMP BAGUE	1					
39	6FM–14137–00	CLIP JONC	1					
40	6LH–87226–00	WIRE HARNESS ASSY ENS. FAISCEAU ELECTRIQUE	1					

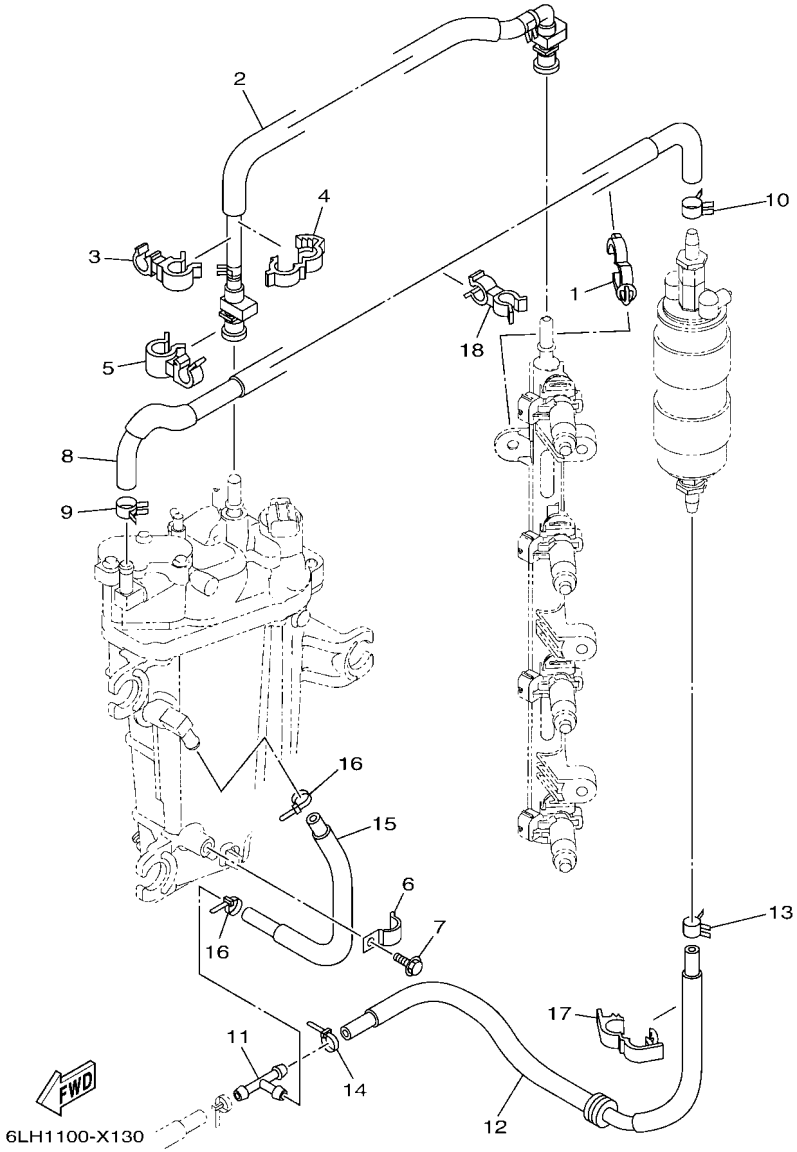

FIG. 13 FUEL INJECTION PUMP 2 — POMPE A INJECTEUR 2

REF. NO.	PART NO. N° PIECES	DESCRIPTION DESCRIPTION	6LY4					REMARKS REMARQUES
1	90464–20181	CLAMP BRIDE	1					
2	6DA–24310–01	FUEL PIPE ASSY DURITE A ESSENCE	1					
3	90464–12010	CLAMP BRIDE	1					
4	90464–16003	CLAMP BRIDE	1					
5	90464–15007	CLAMP BRIDE	1					
6	90465–08M63	CLAMP BRIDE	1					
7	95D95–06010	BOLT, FLANGE DEEP RECESS BOULON FIXATION	1					
8	6DA–24324–10	PIPE 13 DURITE 13	1					
9	90467–120A7	CLIP JONC	1					
10	90467–140A9	CLIP JONC	1					
11	6E5–24378–00	PIPE, JOINT 3 DURITE, RACCORDEMENT 3	1					
12	6DA–24317–01	PIPE 7 DURITE 7	1					EXCEPT FOR RUS EXCEPT FOR RUS
	6DA–24317–10	PIPE 7 DURITE 7	1					FOR RUS FOR RUS
13	90467–141A2	CLIP JONC	1					
14	90465–11M10	CLAMP BRIDE	1					
15	6DA–24323–00	PIPE 12 DURITE 12	1					EXCEPT FOR RUS EXCEPT FOR RUS
	6DA–24323–10	PIPE 12 DURITE 12	1					FOR RUS FOR RUS
16	90465–11M10	CLAMP BRIDE	2					
17	90464–18004	CLAMP BRIDE	1					
18	90464–13260	CLAMP BRIDE	1					

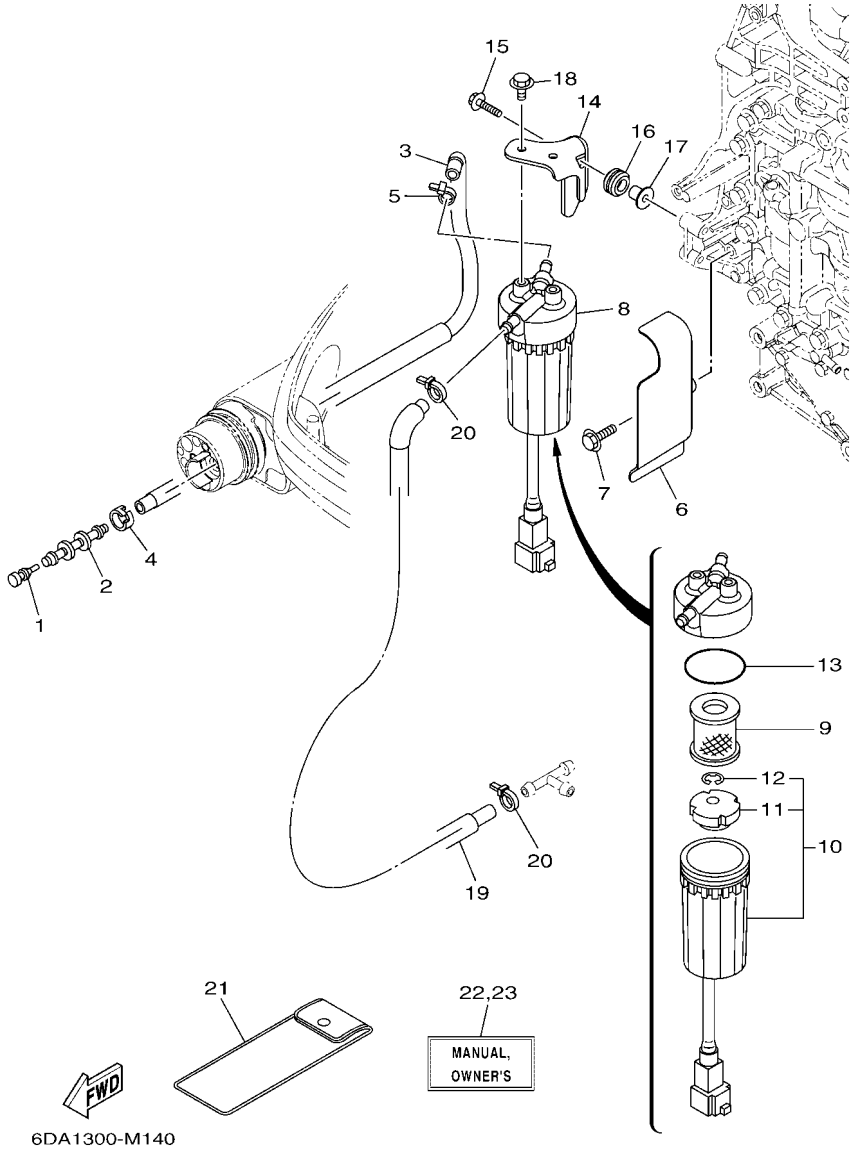

FIG. 14 FUEL 1 — CARBURANT 1

REF. NO.	PART NO. N° PIECES	DESCRIPTION DESCRIPTION	6LY4					REMARKS REMARQUES
1	689–85547–01	DAMPER AMORTISSEUR	1					
2	6AW–24377–01	PIPE, JOINT 2 DURITE RACCORDEMENT 2	1					
3	6DA–24314–01	PIPE 4 DURITE 4	1					EXCEPT FOR RUS EXCEPT FOR RUS
	6DA–24314–10	PIPE 4 DURITE 4	1					FOR RUS FOR RUS
4	6E5–24351–51	BAND 1 COLLIER 1	1					
5	90465–11M10	CLAMP BRIDE	1					
6	6DA–24596–01	COVER COUVERCLE	1					
7	95D95–06025	BOLT, FLANGE DEEP RECESS BOULON FIXATION	2					
8	6P3–24560–04	FILTER ASSY ENS FILTRE	1					
9	6P3–24563–02	.ELEMENT, FILTER .ELEMENT, FILTRE	1					
10	6P3–24562–03	.CUP, FILTER .CUVETTE, FILTRE	1					
11	6P3–24469–00	..FLOAT, WATER LEVEL ..FLOTTEUR	1					
12	6P3–24519–00	..CLIP ..JONC	1					
13	6P3–24564–00	.GASKET .JOINT	1					
14	6DA–24566–00	BRACKET, FILTER SUPPORT, FILTRE	1					
15	90119–06309	BOLT, WITH WASHER BOULON, AVEC RONDELLE	2					
16	90480–15013	GROMMET PASSE-FIL	2					
17	90387–06289	COLLAR COLLERETTE	2					
18	95D95–06012	BOLT, FLANGE DEEP RECESS BOULON FIXATION	2					
19	6DA–24313–00	PIPE 3 DURITE 3	1					EXCEPT FOR RUS EXCEPT FOR RUS
	6DA–24313–10	PIPE 3 DURITE 3	1					FOR RUS FOR RUS
20	90465–11M10	CLAMP BRIDE	2					
21	6LH–28100–01	TOOL KIT TROUSSE A OUTILS	1					AP AP
22	6LW–28199–73–E0	MANUAL,OWNER'S MANUEL D'UTILISATION	1					UR (E) UR (E)
	6LW–28199–73–F0	MANUAL,OWNER'S MANUEL D'UTILISATION	1					UR (F) UR (F)
	6LW–28199–73–S0	MANUAL,OWNER'S MANUEL D'UTILISATION	1					UR (ES) UR (ES)
	6LW–28199–73–G0	MANUAL,OWNER'S MANUEL D'UTILISATION	1					UR (D) UR (D)

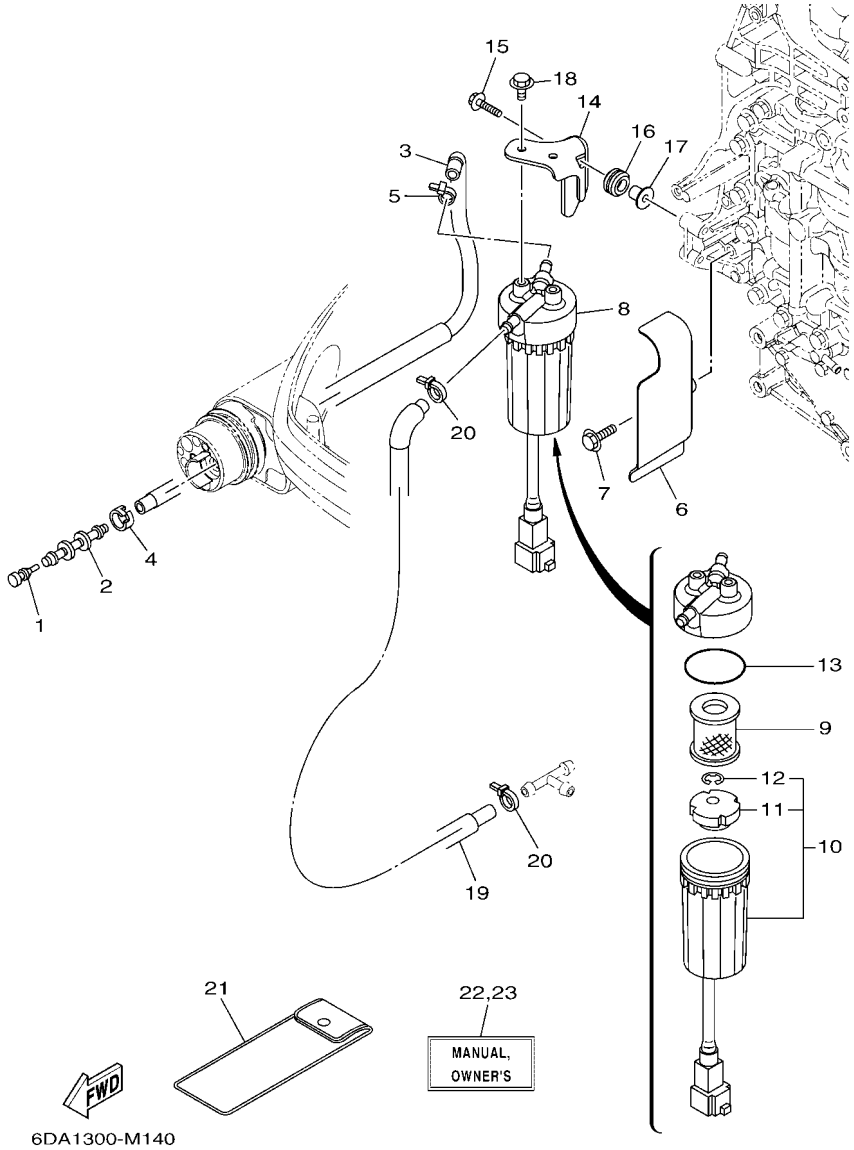

FIG. 14 FUEL 1 — CARBURANT 1

REF. NO.	PART NO. N° PIECES	DESCRIPTION DESCRIPTION	6LY4					REMARKS REMARQUES
22	6LW–28199–73–D0	MANUAL,OWNER'S MANUEL D'UTILISATION	1					UR (NL) UR (NL)
	6LW–28199–73–H0	MANUAL,OWNER'S MANUEL D'UTILISATION	1					UR (I) UR (I)
23	6LW–28199–83–K0	MANUAL,OWNER'S MANUEL D'UTILISATION	1					UR (DK) UR (DK)
	6LW–28199–83–R0	MANUAL,OWNER'S MANUEL D'UTILISATION	1					UR (GR) UR (GR)
	6LW–28199–83–P0	MANUAL,OWNER'S MANUEL D'UTILISATION	1					UR (P) UR (P)
	6LW–28199–83–N0	MANUAL,OWNER'S MANUEL D'UTILISATION	1					UR (N) UR (N)
	6LW–28199–83–M0	MANUAL,OWNER'S MANUEL D'UTILISATION	1					UR (S) UR (S)
	6LW–28199–83–L0	MANUAL,OWNER'S MANUEL D'UTILISATION	1					UR (SF) UR (SF)

FIG. 15 FUEL 2 — CARBURANT 2

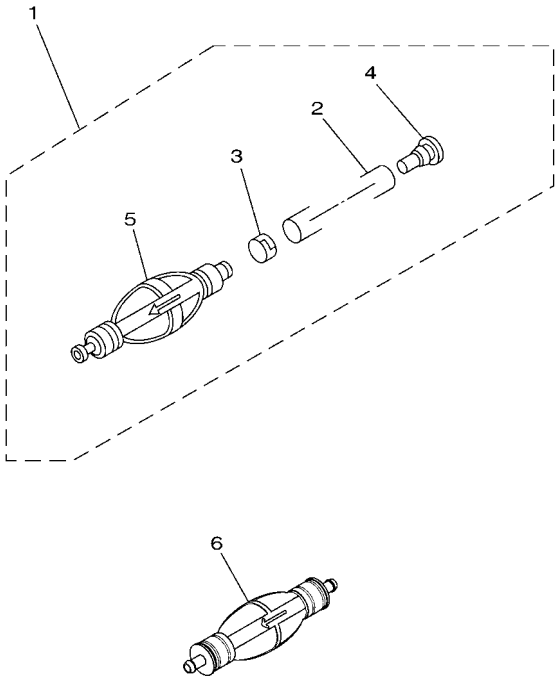

REF. NO.	PART NO. N° PIECES	DESCRIPTION DESCRIPTION	6LY4					REMARKS REMARQUES
1	6Y2–24307–52	FUEL PIPE COMP. 2 DURITE A ESSENCE 2	1					AP FOR RUS AP FOR RUS
2	90445–13M25	.HOSE (L2050) .DURITE (L2050)	1					
3	6E5–24351–51	.BAND 1 .COLLIER 1	1					
4	90480–06M19	.GROMMET .PASSE-FIL	1					
5	6Y2–24360–60	.PRIMER PUMP ASSY .POMPE D'AMORCAGE	1					
6	6YK–24360–73	PRIMER PUMP ASSY POMPE D'AMORCAGE	1					AP EXCEPT FOR RUS AP EXCEPT FOR RUS

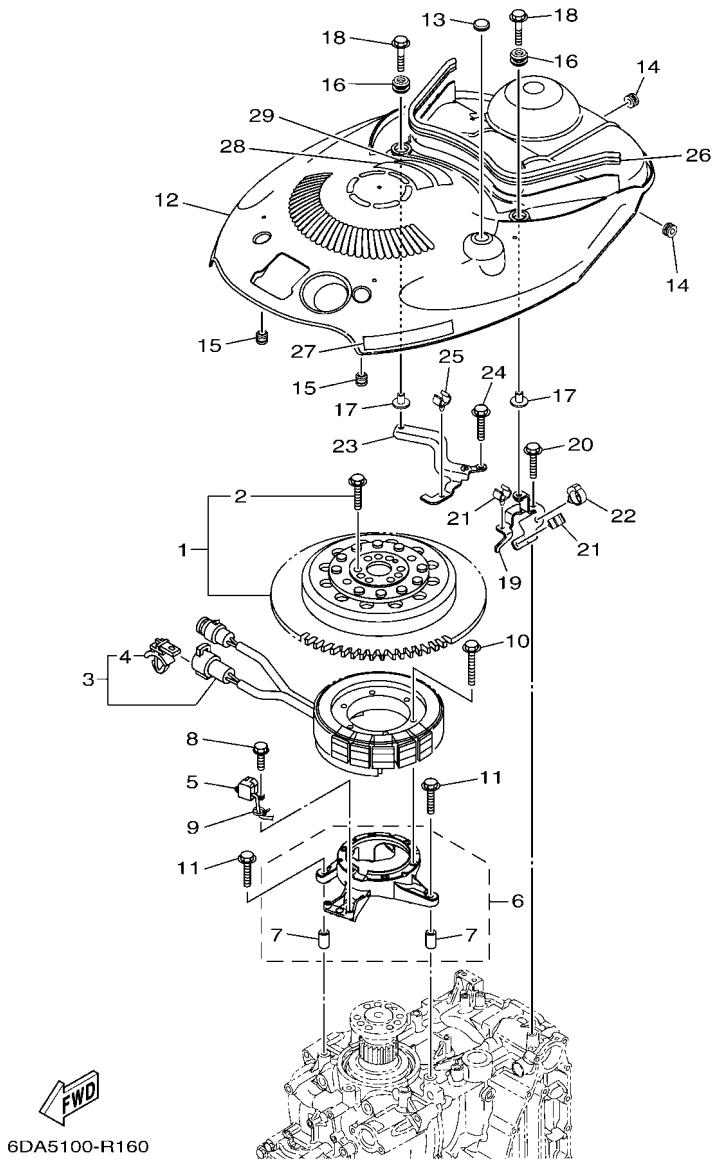

FIG. 16 GENERATOR — GENERATRICE

REF. NO.	PART NO. N° PIECES	DESCRIPTION DESCRIPTION	6LY4					REMARKS REMARQUES
1	6DA–W8145–00	ROTOR ASSY WITH BOLTS ROTOR COMPLET AVEC BOULON	1					
2	6EK–W9010–00	.BOLT SET .BOULON ENS.	1					
3	6DA–81410–00	STATOR ASSY STATOR COMPLET	1					
4	90464–12002	.CLAMP .BRIDE	1					
5	6CB–85580–01	COIL, PULSER BOBINE, PULSEUR	1					
6	6DA–85561–00	BASE, MAGNETO BASE, MAGNETO	1					
7	99530–08012	.PIN, DOWEL .GOUJON, D'ASSEMBLAGE	2					
8	97595–05520	BOLT, WITH WASHER VIS HEXAGONAL AVC RONDELLE	2					
9	90465–13M97	CLAMP BRIDE	1					
10	95022–06035	BOLT, FLANGE BOULON, A COLLERETTE	6					
11	95D95–06030	BOLT, FLANGE DEEP RECESS BOULON FIXATION	4					
12	6DA–81337–01	COVER, FLYWHEEL COUVERCLE, VOLANT	1					
13	90480–16025	GROMMET PASSE-FIL	1					
14	90480–12314	GROMMET PASSE-FIL	2					
15	6A0–82317–01	DAMPER, IGNITION COIL AMORTISSEUR, BOBINE D'ALLUM	2					
16	6BG–42748–01	GROMMET PASSE-FIL	2					
17	90387–06M69	COLLAR COLLERETTE	2					
18	90119–06291	BOLT, WITH WASHER BOULON, AVEC RONDELLE	2					
19	6DA–8132G–01	PLATE PLAQUE	1					
20	95D95–06016	BOLT, FLANGE DEEP RECESS BOULON FIXATION	1					
21	90464–09130	CLAMP BRIDE	2					
22	90464–20181	CLAMP BRIDE	1					
23	6DA–82398–01	PLATE 3 PLAQUETTE 3	1					
24	95D95–06016	BOLT, FLANGE DEEP RECESS BOULON FIXATION	2					
25	90464–09130	CLAMP BRIDE	1					
26	6DA–42617–00	DAMPER, FORM BOURRELET, CAOUTCHOUC	1					
27	63P–13437–63	MARK, CAUTION MAKER	1					

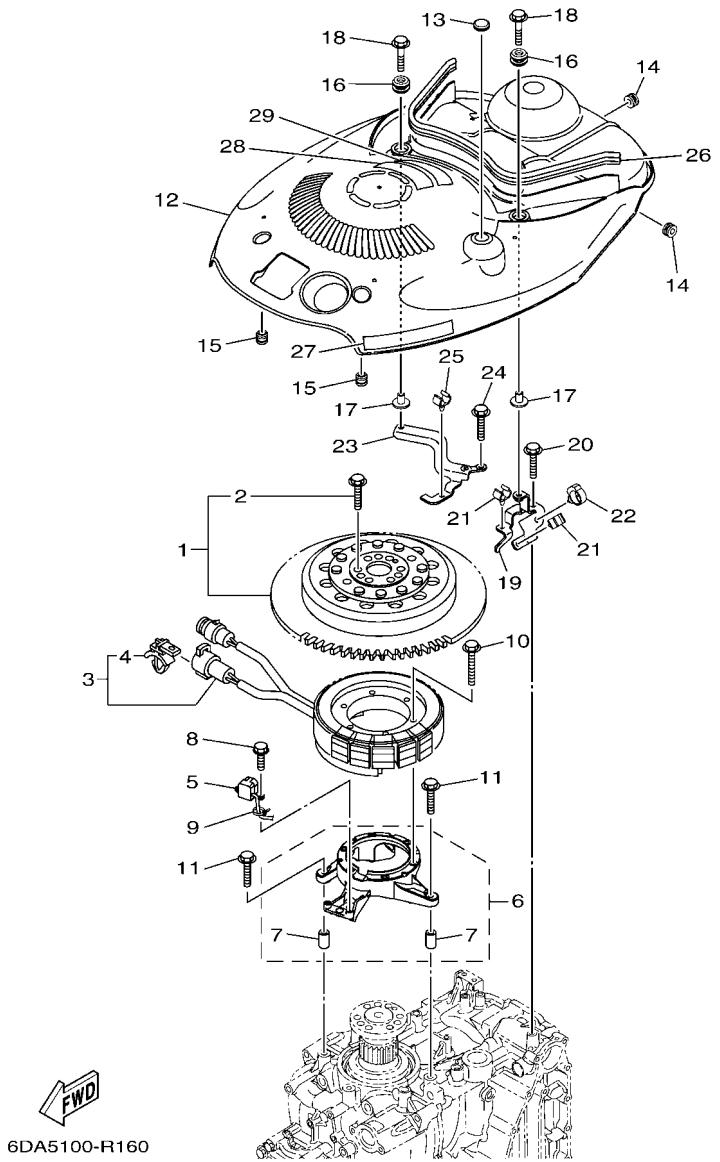

FIG. 16 GENERATOR — GENERATRICE

REF. NO.	PART NO. N° PIECES	DESCRIPTION DESCRIPTION	6LY4					REMARKS REMARQUES
28	6EE–81994–41	LABEL, SAFETY ETIQUETTE, SECURITE	1					
29	6EE–81994–51	LABEL, SAFETY ETIQUETTE, SECURITE	1					

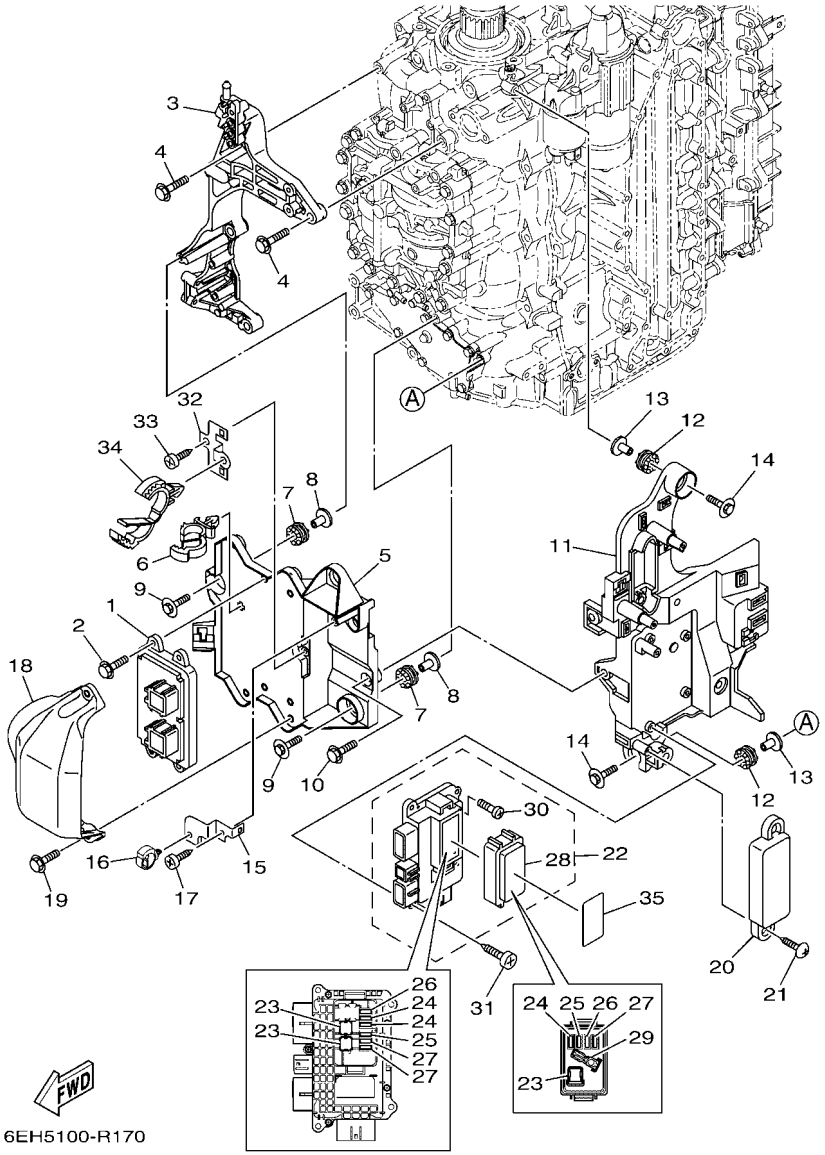

FIG. 17 ELECTRICAL 1 — PARTIE ELECTRIQUE 1

REF. NO.	PART NO. N° PIECES	DESCRIPTION DESCRIPTION	6LY4					REMARKS REMARQUES
1	6LY–8591A–00	ENGINE CONTROL UNIT ASSY BLOC DE CONTROL	1					
2	95D95–06020	BOLT, FLANGE DEEP RECESS BOULON FIXATION	4					
3	6DA–85991–01	BRACKET, UNIT SUPPORT COMPLET	1					
4	95D75–08035	BOLT, FLANGE DEEP RECESS BOULON FIXATION	4					
5	6DA–81948–01	BRACKET SUPPORT	1					
6	90464–12183	CLAMP BRIDE	1					
7	68F–85516–01	SPACER ENTRETOISE	3					
8	90387–06176	COLLAR COLLERETTE	3					
9	90119–06328	BOLT, WITH WASHER BOULON, AVEC RONDELLE	3					
10	95D95–06016	BOLT, FLANGE DEEP RECESS BOULON FIXATION	2					
11	6DA–81952–10	HOLDER, RELAY SUPPORT, RELAIS	1					
12	68F–85516–01	SPACER ENTRETOISE	3					
13	90387–06176	COLLAR COLLERETTE	3					
14	90119–06328	BOLT, WITH WASHER BOULON, AVEC RONDELLE	3					
15	6DA–85548–10	HOLDER SUPPORT	1					
16	90464–20181	CLAMP BRIDE	1					
17	97780–60620	SCREW, TAPPING VIS, TETE BOMBEE	1					
18	6DA–81639–01	COVER COUVERCLE	1					
19	95D95–06020	BOLT, FLANGE DEEP RECESS BOULON FIXATION	2					
20	6DA–8252U–01	COVER COUVERCLE	1					
21	90169–05M00	SCREW, TRUSS HEAD TAPPING VIS, TETE FRAISEE	2					
22	6DA–82170–12	FUSE BOX ASSY BOITE A FUSIBLES	1					
23	6CB–82151–41	.FUSE (60A) .FUSIBLE (60A)	3					
24	6CB–82151–00	.FUSE (10A) .FUSIBLE (10A)	3					
25	6CB–82151–10	.FUSE (15A) .FUSIBLE (15A)	2					
26	6CB–82151–20	.FUSE (20A) .FUSIBLE (20A)	2					
27	6CB–82151–30	.FUSE (30A) .FUSIBLE (30A)	3					

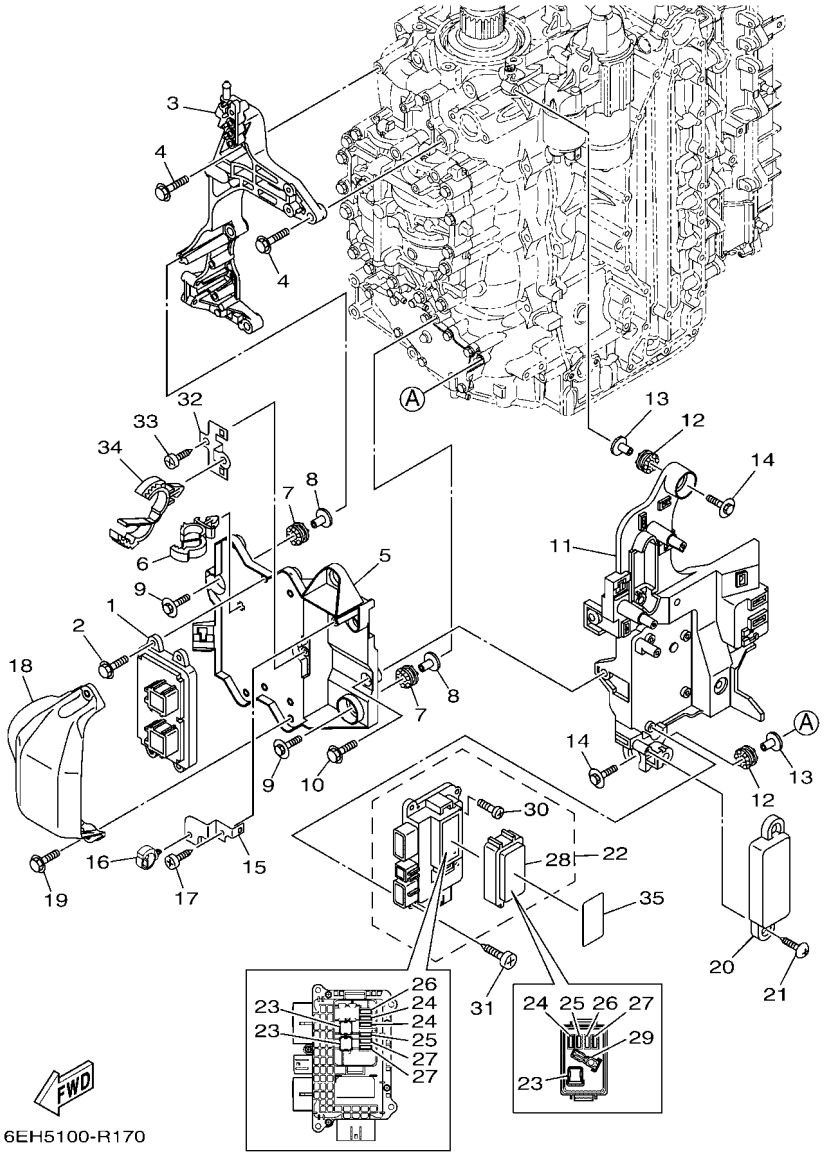

FIG. 17 ELECTRICAL 1 — PARTIE ELECTRIQUE 1

REF. NO.	PART NO. N° PIECES	DESCRIPTION DESCRIPTION	6LY4					REMARKS REMARQUES
28	6CB–85544–10	.COVER .COUVERCLE	1					
29	6CB–2812A–00	.PULLER, FUSE .TENDEUR, FUSIBLE	1					
30	6P2–82113–00	.SCREW (M3) .VIS (M3)	5					
31	97780–50620	SCREW, TAPPING VIS, TETE BOMBEE	4					
32	6DA–8257V–00	PLATE, CONNECTOR PLAQUE, CONNECTEUR	1					
33	97780–60620	SCREW, TAPPING VIS, TETE BOMBEE	1					
34	90464–32002	CLAMP BRIDE	1					
35	6LW–81919–00	GRAPHIC, REGULATOR ADHESIF, REGULATEUR	1					

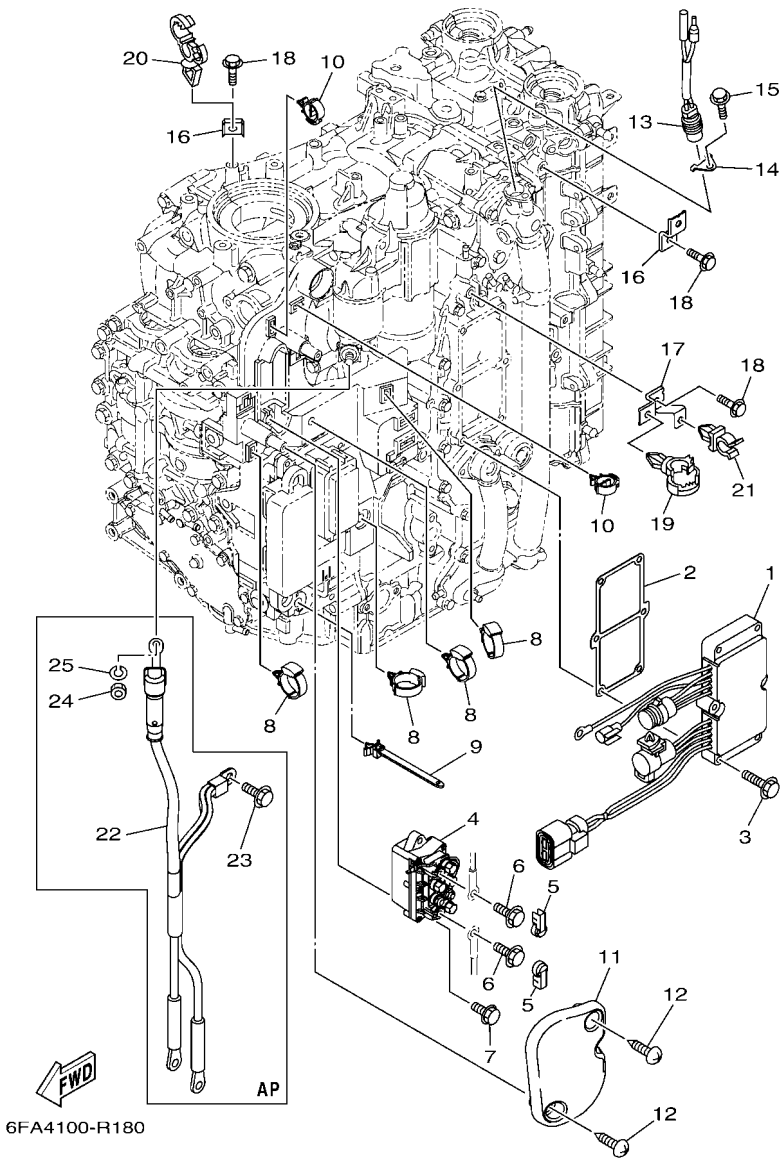

FIG. 18 ELECTRICAL 2 — PARTIE ELECTRIQUE 2

REF. NO.	PART NO. N° PIECES	DESCRIPTION DESCRIPTION	6LY4					REMARKS REMARQUES
1	6DA–81960–10	RECTIFIER & REGULATOR ASSY REDRESSEUR REGULATEUR CPLT	1					
2	6DA–81975–01	PLATE, RECTIFIER FITTING PLAQUE, FIXATION DU REDRESSEUR	1					
3	97E95–06535	BOLT, HEXAGON W/W DEEP RECESS VIS HEXAGONAL AVC RONDELLE	6					
4	63P–W8195–00	RELAY ASSY RELAIS COMPLET	1					
5	6P2–8183X–00	CAP, TERMINAL COUVERCLE, BORNE	2					
6	97E95–06610	BOLT, HEXAGON W/W DEEP RECESS VIS HEXAGONAL AVC RONDELLE	2					
7	97E95–06520	BOLT, HEXAGON W/W DEEP RECESS VIS HEXAGONAL AVC RONDELLE	2					
8	90464–12183	CLAMP BRIDE	4					
9	90464–12089	CLAMP BRIDE	1					
10	90464–18246	CLAMP BRIDE	2					
11	6DA–81942–01	COVER COUVERCLE	1					
12	90169–05M00	SCREW, TRUSS HEAD TAPPING VIS, TETE FRAISEE	2					
13	6P2–82560–01	THERMO SWITCH ASSY THERMO-CONTACT COMPLET	1					
14	6E9–82588–00	PLATE PLAQUE	1					
15	95D95–06012	BOLT, FLANGE DEEP RECESS BOULON FIXATION	1					
16	6DA–82388–00	PLATE PLAQUETTE	2					
17	6DA–82389–00	PLATE 2 PLAQUETTE 2	1					
18	95D95–06016	BOLT, FLANGE DEEP RECESS BOULON FIXATION	3					
19	90464–20181	CLAMP BRIDE	1					
20	90464–13249	CLAMP BRIDE	1					
21	90464–09008	CLAMP BRIDE	1					
22	6DA–82105–02	BATTERY CABLE CABLE DE BATTERIE	1					AP AP
23	95D95–08016	BOLT, FLANGE DEEP RECESS BOULON FIXATION	1					AP AP
24	95333–08600	NUT ECROU	1					AP AP
25	92903–08100	WASHER, SPRING RONDELLE, GROWER	1					AP AP

FIG. 19 ELECTRICAL 3 — PARTIE ELECTRIQUE 3

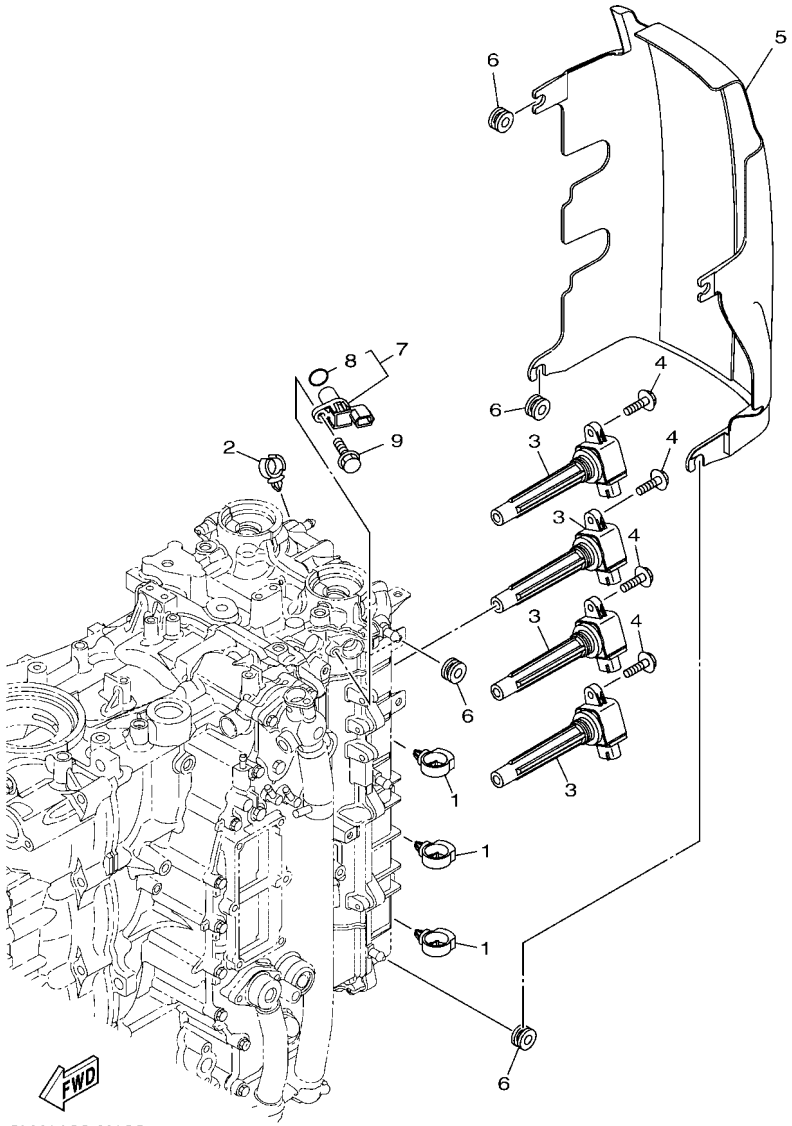

6LY1100-X190

REF. NO.	PART NO. N° PIECES	DESCRIPTION DESCRIPTION	6LY4					REMARKS REMARQUES
1	90464–20181	CLAMP BRIDE	3					
2	90464–13249	CLAMP BRIDE	1					
3	6CB–82310–02	IGNITION COIL ASSY BOBINE D'ALLUMAGE	4					
4	95D95–06025	BOLT, FLANGE DEEP RECESS BOULON FIXATION	4					
5	6DA–82314–01	COVER, IGNITION COIL COUVERCLE, BOBINE D'ALLUMAGE	1					
6	90480–12314	GROMMET PASSE-FIL	4					
7	6P2–85896–00	SENSOR, CAM POSITION SONDE DE CAME	1					
8	6P2–85075–00	.O-RING .JOINT TORIQUE	1					
9	97E95–06520	BOLT, HEXAGON W/W DEEP RECESS VIS HEXAGONAL AVC RONDELLE	1					

FIG. 20 ELECTRICAL 4 — PARTIE ELECTRIQUE 4

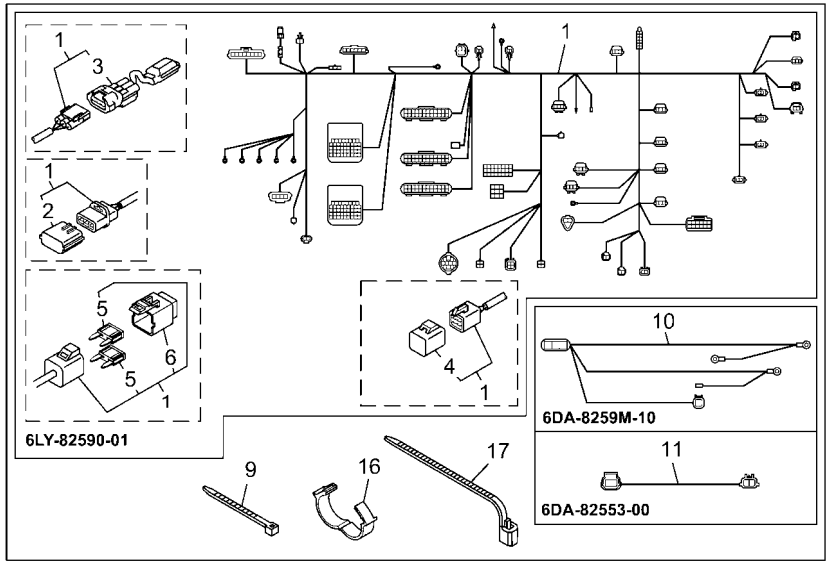

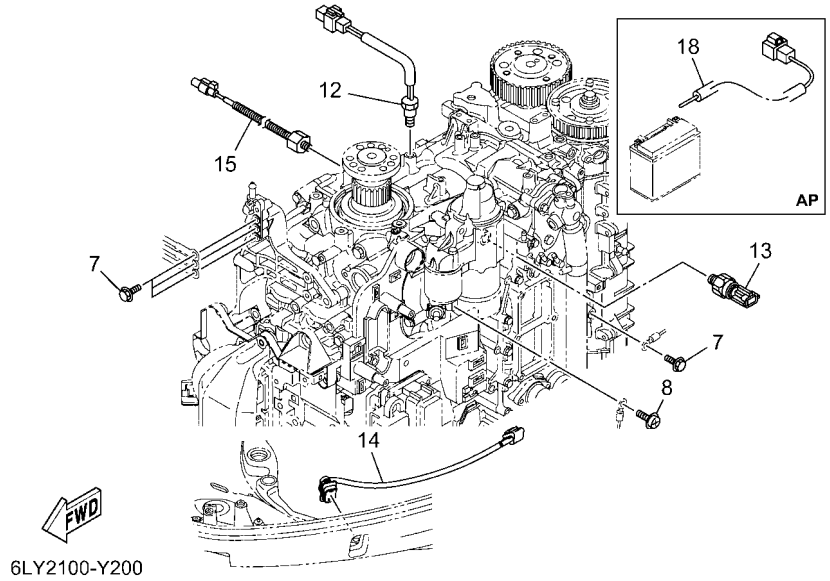

6LY2100-Y200

REF. NO.	PART NO. N° PIECES	DESCRIPTION DESCRIPTION	6LY4					REMARKS REMARQUES
1	6LY–82590–01	WIRE HARNESS ASSY FAISCEAU DE FILS COMPLET	1					
2	6AW–82582–00	.CAP 1 .BOUCHON 1	2					
3	6FM–81980–01	.DIODE ASSY .REDRESSEUR 2	1					
4	6Y8–82582–11	.CAP 1 (4PIN) .COUVERCLE 1 (4P)	1					
5	67F–82151–20	.FUSE (5A) .FUSIBLE (5A)	2					
6	69J–8215B–00	.CAP (BROWN) .BOUCHON (BRUN)	1					
7	97E95–06516	BOLT, HEXAGON W/W DEEP RECESS VIS HEXAGONAL AVC RONDELLE	4					
8	97985–04308	SCREW, WITH WASHER VIS, AVEC RONDELLE	1					
9	90465–11M59	CLAMP BRIDE	1					
10	6DA–8259M–10	WIRE HARNESS ASSY 2 FAISCEAU DE FILS	1					
11	6DA–82553–00	EXTENSION, WIRE LEAD EXTENSION, FAISCEAU	1					
12	6CB–85790–00	THERMOSENSOR ASSY SENSITOMETRE	1					
13	6AW–83651–01	SENDER, OIL PRESSURE RACCORD, PRESSION D'HUILE	1					
14	6FM–82563–01	TRIM & TILT SWITCH ASSY INCLINER ET PARER COMMUTATEUR	1					
15	6CJ–85780–02	SENSOR, KNOCK SONDE DE COGNEMENT	1					
16	90464–26001	CLAMP BRIDE	4					
17	90464–15195	CLAMP BRIDE	2					
18	69J–81949–03	WIRE, LEAD (ISOLATOR, 3.8M) FIL (ISOLATOR, 3.8M)	1					AP AP

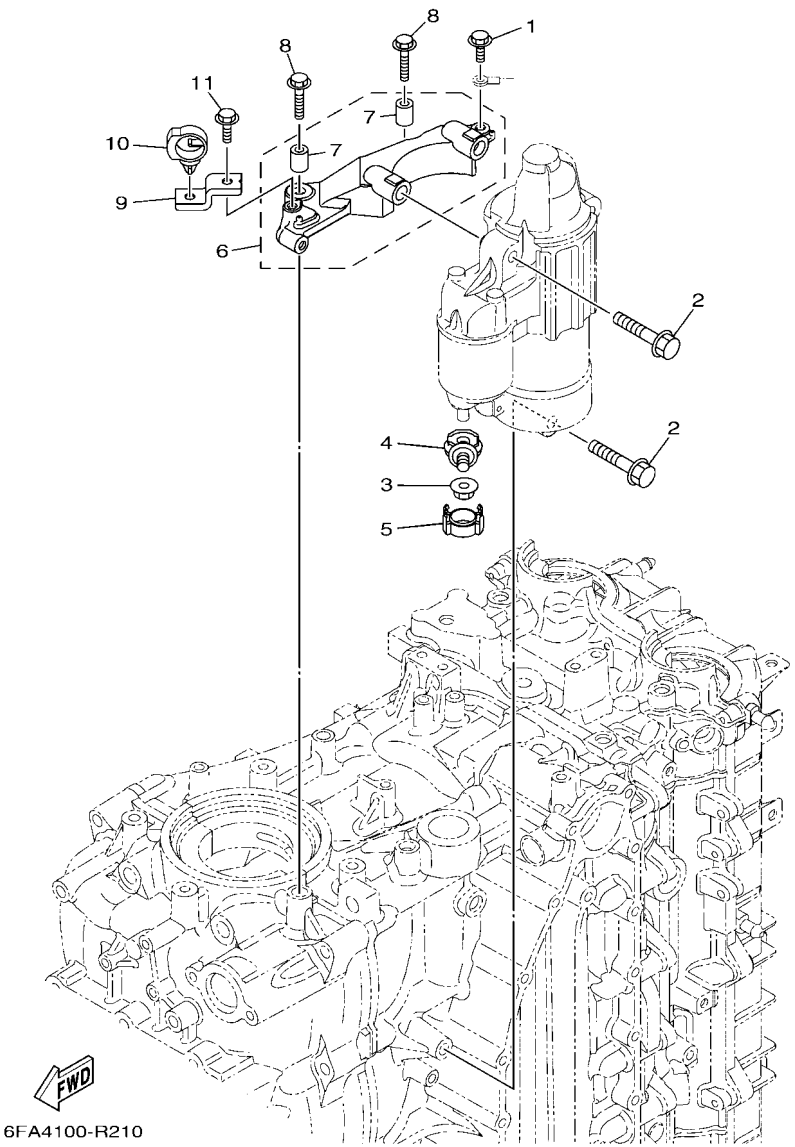

FIG. 21 ELECTRICAL 5 — PARTIE ELECTRIQUE 5

REF. NO.	PART NO. N° PIECES	DESCRIPTION DESCRIPTION	6LY4					REMARKS REMARQUES
1	97E95–06516	BOLT, HEXAGON W/W DEEP RECESS VIS HEXAGONAL AVC RONDELLE	1					
2	97513–08545	BOLT, WITH WASHER VIS HEXAGONAL AVC RONDELLE	3					
3	90179–08003	NUT ECROU	1					
4	60V–81925–00	TERMINAL BORNE	1					
5	68F–82582–00	CAP,1 COUVERCLE 1	1					
6	6DA–81822–00	BRACKET, STARTING MOTOR SUPPORT, DEMARREUR ELECTRIQUE	1					
7	99590–10114	.PIN, DOWEL .GOUJON, D'ASSEMBLAGE	2					
8	90105–08M87	BOLT, FLANGE BOULON, A COLLERETTE	2					
9	6DA–82388–00	PLATE PLAQUETTE	1					
10	90464–20181	CLAMP BRIDE	1					
11	95D95–06016	BOLT, FLANGE DEEP RECESS BOULON FIXATION	1					

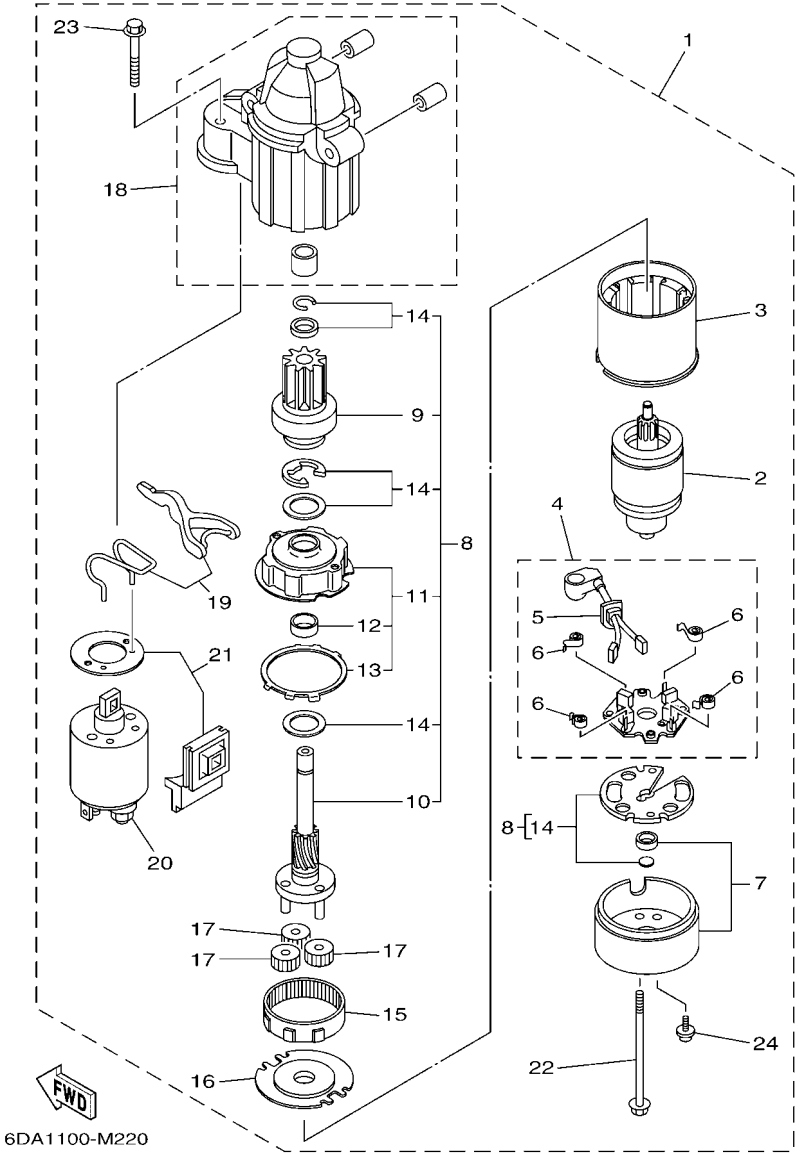

FIG. 22 STARTING MOTOR — DEMARREUR ELECTRIQUE

REF. NO.	PART NO. N° PIECES	DESCRIPTION DESCRIPTION	6LY4					REMARKS REMARQUES
1	6CB–81800–02	STARTING MOTOR ASSY DEMARREUR ELECTRIQUE COMPLET	1					
2	67F–81850–00	.ARMATURE ASSY .INDUIT	1					
3	67F–81810–00	.STATOR ASSY .STATOR COMPLET	1					
4	69J–81840–11	.BRUSH HOLDER ASSY .SUPPORT DE CHARBON	1					
5	69J–81801–11	..BRUSH SET ..JEU DE BROSSE	1					
6	67F–81813–00	..SPRING, BRUSH ..RESSORT, DE CHARBON	4					
7	6CB–81820–00	.REAR BRACKET ASSY .SUPPORT ARRIERE COMPLET	1					
8	6CB–81807–00	.GEAR ASSY, STARTING MOTOR .PIGNON, DEMARREUR ELECTRIQUE	1					
9	6CB–81832–00	..CLUTCH, OVER RUN ..EMBRAYAGE, ROUE LIBRE	1					
10	6CB–81836–00	..SHAFT, PINION ..AXE, PIGNON	1					
11	67F–81821–00	..BRACKET, CENTER 1 ..SUPPORT, CENTRE 1	1					
12	67F–81841–00	...BEARING ...ROULEMENT	1					
13	67F–8183R–00	...GASKET ...JOINT	1					
14	6CB–81809–00	..WASHER KIT ..JEU DE RONDELLES	1					
15	67F–81891–00	.GEAR, RING .ROUE DENTEE	1					WITH 67F-8183R-00 WITH 67F-8183R-00
16	67F–81830–00	.BRACKET, CENTER 2 .SUPPORT, CENTRE 2	1					
17	60V–8183T–00	.GEAR, IDLER .PIGNON, INTERMEDIAIRE	3					
18	6CB–81842–00	.COVER .COUVERCLE	1					
19	6C5–81839–00	.LEVER ASSY .LEVIER COMPLET	1					
20	6C5–81941–01	.STARTER RELAY ASSY .LANCEUR RELAIS (ENS.)	1					
21	6C5–81869–00	.COVER, DUST .COUVERCLE, POUSSIERE	1					
22	6CB–81826–00	.BOLT .BOULON	2					
23	69J–81828–00	.BOLT 2 .BOULON 2	2					
24	67F–81846–00	.SCREW .VIS	2					

FIG. 23 BOTTOM COWLING 1 CAPOT INFERIEUR 1

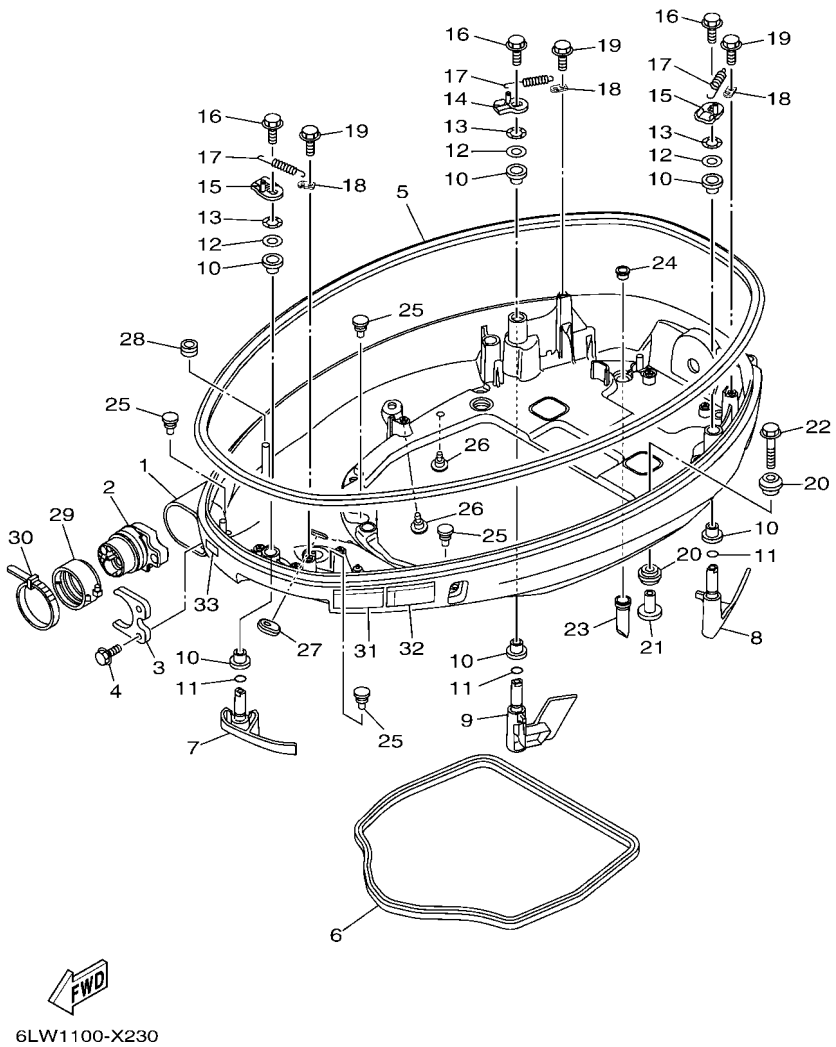

REF. NO.	PART NO. N° PIECES	DESCRIPTION DESCRIPTION	6LY4					REMARKS REMARQUES
1	6LH–42710–00–8D	BOTTOM COWLING ASSY ENS. EMBASE	1					
2	6DA–42725–03	GROMMET PASSE-FIL	1					
3	6CB–42761–00	STOPPER PLAQUETTE	1					
4	95D95–06014	BOLT, FLANGE DEEP RECESS BOULON FIXATION	2					
5	6LH–42615–00	SEAL JOINT	1					
6	63P–42716–01	RUBBER SEAL 1 JOINT EN CAOUTCHOUC 1	1					
7	6LH–42815–00–8D	LEVER, CLAMP 1 LEVIER, PRESSE 1	1					
8	6LH–42816–00–8D	LEVER, CLAMP 2 LEVIER, PRESSE 2	1					
9	6LH–42817–00–8D	LEVER, CLAMP 3 LEVIER, PRESSE 3	1					
10	90386–15M73	BUSH DOUILLE	6					
11	93210–13M63	O-RING JOINT TORIQUE	3					
12	90201–156J2	WASHER, PLATE RONDELLE, PLATE	3					
13	90206–15M18	WASHER, WAVE RONDELLE, ONDULEE	3					
14	6CB–42818–00	LEVER, CLAMP 4 LEVIER, PRESSE 4	1					
15	6CB–42819–00	LEVER, CLAMP 5 LEVIER, PRESSE 5	2					
16	95D95–08012	BOLT, FLANGE DEEP RECESS BOULON FIXATION	3					
17	90506–22001	SPRING, TENSION RESSORT, TENSION	3					
18	66T–43144–00	HOOK, SPRING CROCHET	3					
19	95D95–06012	BOLT, FLANGE DEEP RECESS BOULON FIXATION	3					
20	90480–22M81	GROMMET PASSE-FIL	8					
21	90387–08M37	COLLAR COLLERETTE	4					
22	90119–08187	BOLT, WITH WASHER BOULON, AVEC RONDELLE	4					
23	6DA–42717–01	RUBBER, SEAL 2 JOINT EN CAOUTCHOUC 2	4					
24	6DA–42384–00	SEAL, CAP JOINT, CAPUCHON	4					
25	6H4–42748–01	GROMMET PASSE-FIL	4					
26	6P2–44391–00	NIPPLE, HOSE RACCORD D'ESSENCE	2					
27	6KA–42727–00	GROMMET PASSE-FIL	1					

FIG. 23 BOTTOM COWLING 1 — CAPOT INFERIEUR 1

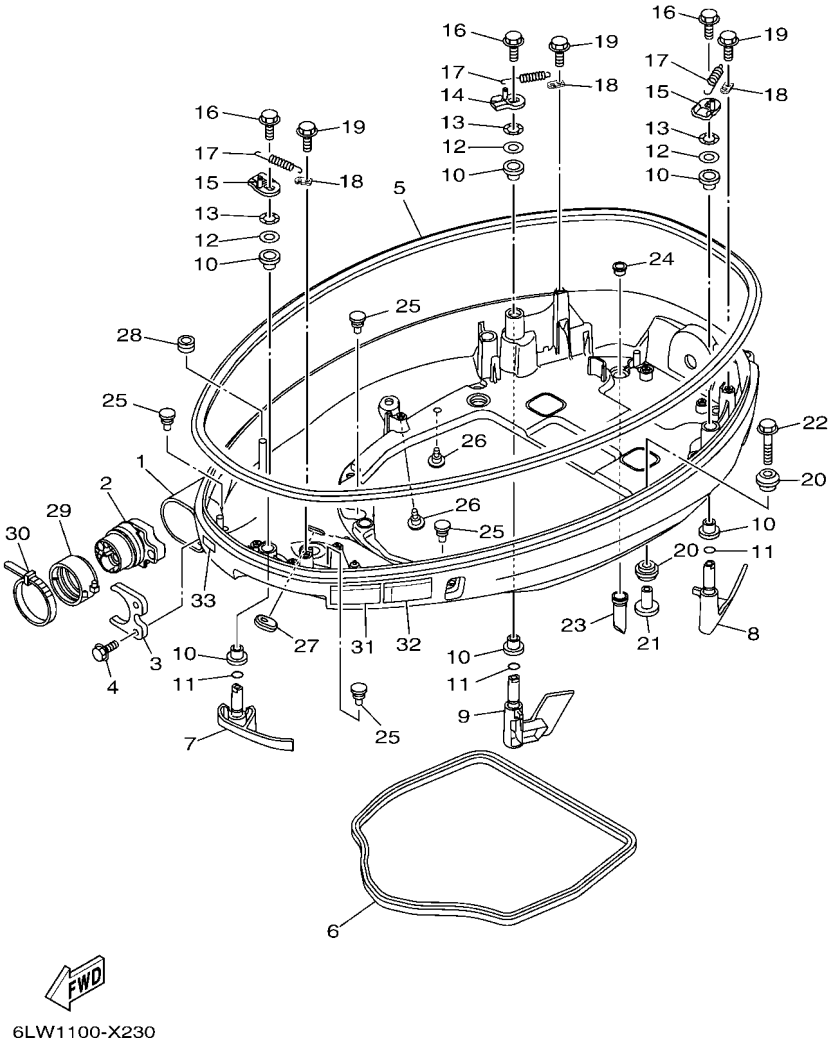

REF. NO.	PART NO. N° PIECES	DESCRIPTION DESCRIPTION	6LY4					REMARKS REMARQUES
28	90480–13163	GROMMET PASSE-FIL	1					
29	68F–42753–00	FASTNER ATTACHE	1					AP AP
30	90464–20258	CLAMP BRIDE	1					AP AP
31	6EE–42794–41	LABEL, WARNING (GENERAL) ETIQUETTE, AVERTISSEMENT	1					
32	6EE–42794–51	LABEL, WARNING (GENERAL) ETIQUETTE, AVERTISSEMENT	1					
33	6AH–81996–01	MARK MARQUE	1					

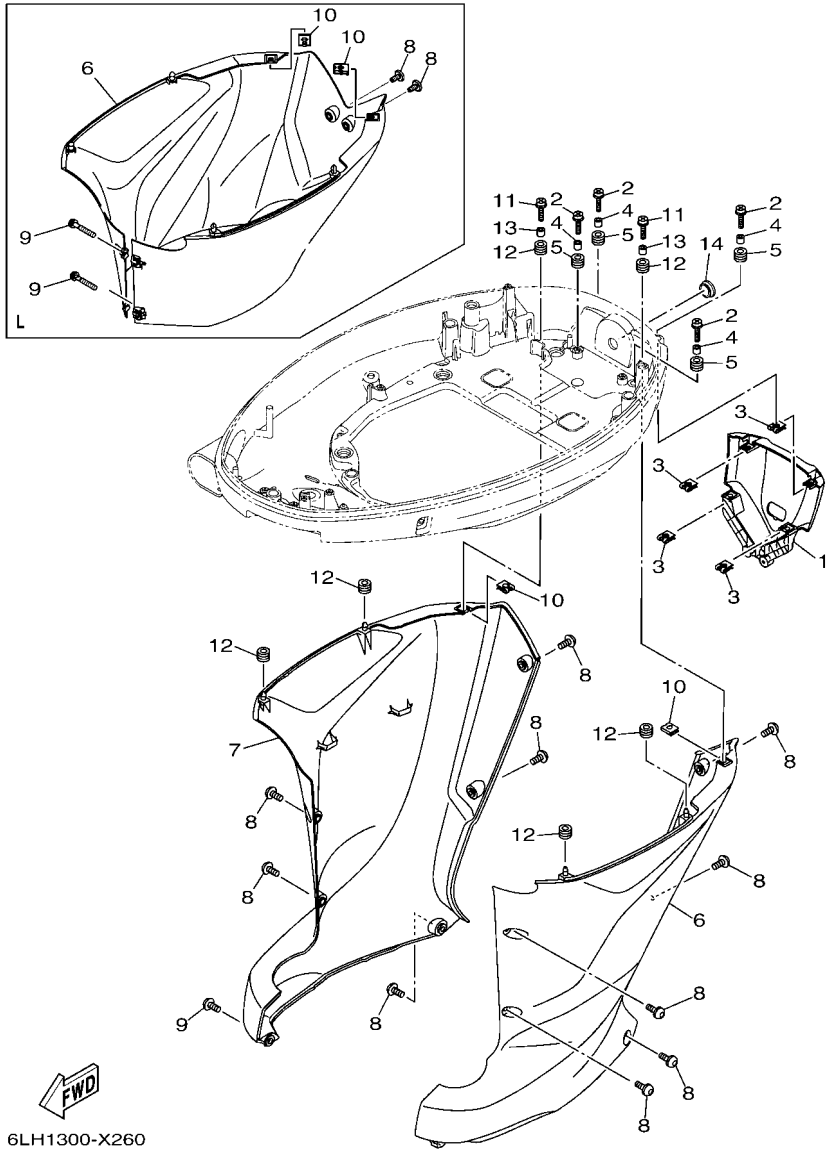

FIG. 24 BOTTOM COWLING 2 — CAPOT INFERIEUR 2

REF. NO.	PART NO. N° PIECES	DESCRIPTION DESCRIPTION	6LY4					REMARKS REMARQUES
1	6LH–42723–00–8D	COVER, BOTTOM COUVERCLE	1					
2	90159–06053	SCREW, WITH WASHER VIS, AVEC RONDELLE	4					
3	90183–061A8	NUT, SPRING ECROU, RESSORT	4					
4	90387–06M43	COLLAR COLLERETTE	4					
5	90480–13M24	GROMMET PASSE-FIL	4					
6	6LH–42740–00–8D	APRON COMPLETE 1 CAPOT LATERAL COMPLETE 1	1					X(25.2") X(25.2")
	6LH–42740–10–8D	APRON COMPLETE 1 CAPOT LATERAL COMPLETE 1	1					L(20.3") L(20.3")
7	6LH–42770–00–8D	APRON COMPLETE 2 CAPOT LATERAL COMPLETE 2	1					X(25.2") X(25.2")
8	90111–06144	BOLT, HEXAGON SOCKET BUTTON BOULON	10					X(25.2") X(25.2")
	90111–06144	BOLT, HEXAGON SOCKET BUTTON BOULON	2					L(20.3") L(20.3")
9	90111–06142	BOLT, HEXAGON SOCKET BUTTON BOULON	1					X(25.2") X(25.2")
	90159–06M28	SCREW, WITH WASHER VIS, AVEC RONDELLE	2					L(20.3") L(20.3")
10	90183–061A8	NUT, SPRING ECROU, RESSORT	2					
11	90159–06053	SCREW, WITH WASHER VIS, AVEC RONDELLE	2					
12	90480–13M24	GROMMET PASSE-FIL	6					
13	90387–06M43	COLLAR COLLERETTE	2					
14	676–42726–00	GROMMET PASSE-FIL	1					

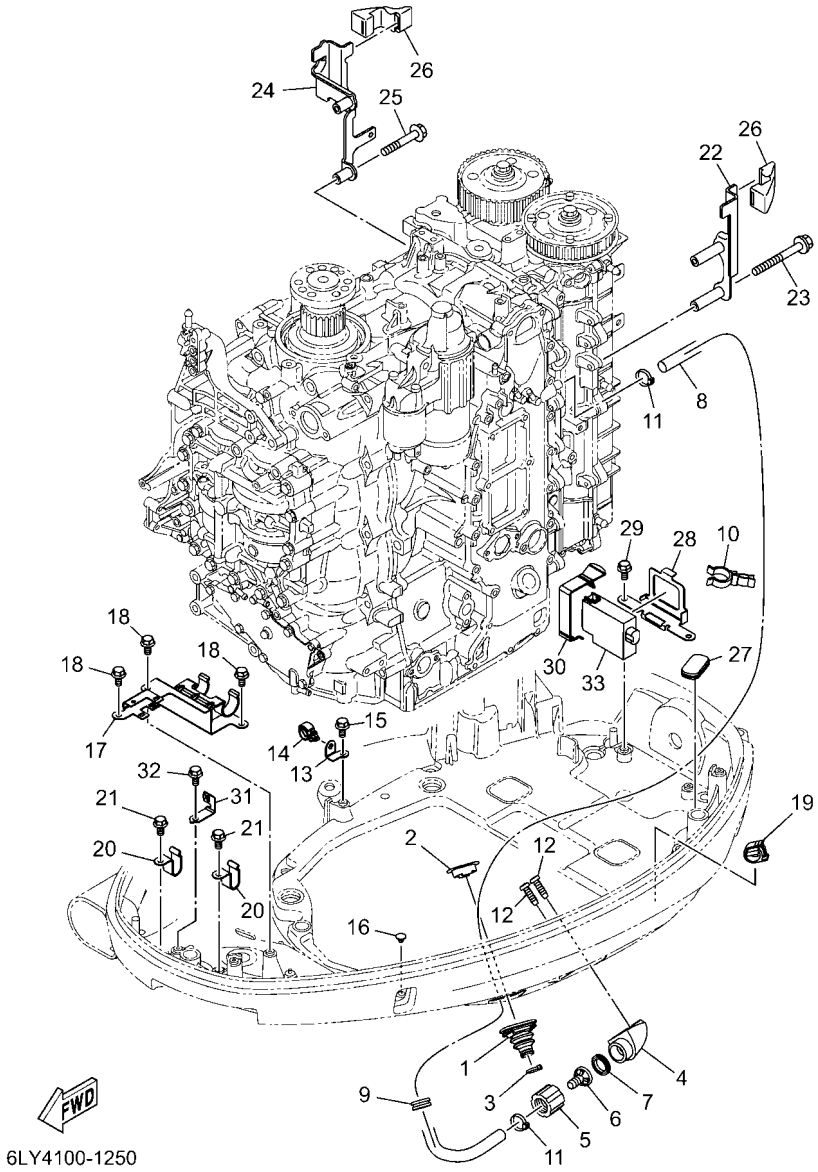

FIG. 25 BOTTOM COWLING 3 — CAPOT INFERIEUR 3

REF. NO.	PART NO. N° PIECES	DESCRIPTION DESCRIPTION	6LY4					REMARKS REMARQUES
1	6BG–42724–01	GROMMET PASSE-FIL	1					
2	6BG–42384–00	SEAL, CAP JOINT, CAPUCHON	1					
3	90465–11M10	CLAMP BRIDE	1					
4	6AW–12572–00	ADAPTER ADAPTATEUR	1					
5	6R3–12581–10	JOINT, HOSE 1 JOINT DE TUYAU	1					
6	6AW–12582–00	JOINT, HOSE 2 RACCORD DE TUYAU 1	1					
7	6R3–12583–10	GASKET, HOSE JOINT JOINT	1					
8	6LH–42541–00	PIPE 1 TUYAU 1	1					
9	90480–19031	GROMMET PASSE-FIL	1					
10	90464–21256	CLAMP BRIDE	1					
11	90465–11M10	CLAMP BRIDE	2					
12	97780–60520	SCREW, TAPPING VIS, TETE BOMBEE	2					
13	6BG–42743–00	BRACKET SUPPORT	1					
14	90464–13249	CLAMP BRIDE	1					
15	95D95–06012	BOLT, FLANGE DEEP RECESS BOULON FIXATION	1					
16	90269–07003	RIVET RIVET	1					
17	6LW–8366G–00	BRACKET 3 SUPPORT 3	1					
18	95D95–06012	BOLT, FLANGE DEEP RECESS BOULON FIXATION	3					
19	90464–18004	CLAMP BRIDE	1					
20	90462–12013	CLAMP BRIDE	2					
21	95D95–06012	BOLT, FLANGE DEEP RECESS BOULON FIXATION	2					
22	6DA–11998–00	BRACKET 1 SUPPORT 1	1					
23	95D95–06065	BOLT, FLANGE DEEP RECESS BOULON FIXATION	2					
24	6DA–11999–00	BRACKET 2 SUPPORT 2	1					
25	95D95–06040	BOLT, FLANGE DEEP RECESS BOULON FIXATION	2					
26	6CB–42662–02	DAMPER AMORTISSEUR	2					
27	6H4–42726–01	GROMMET PASSE-FIL	1					

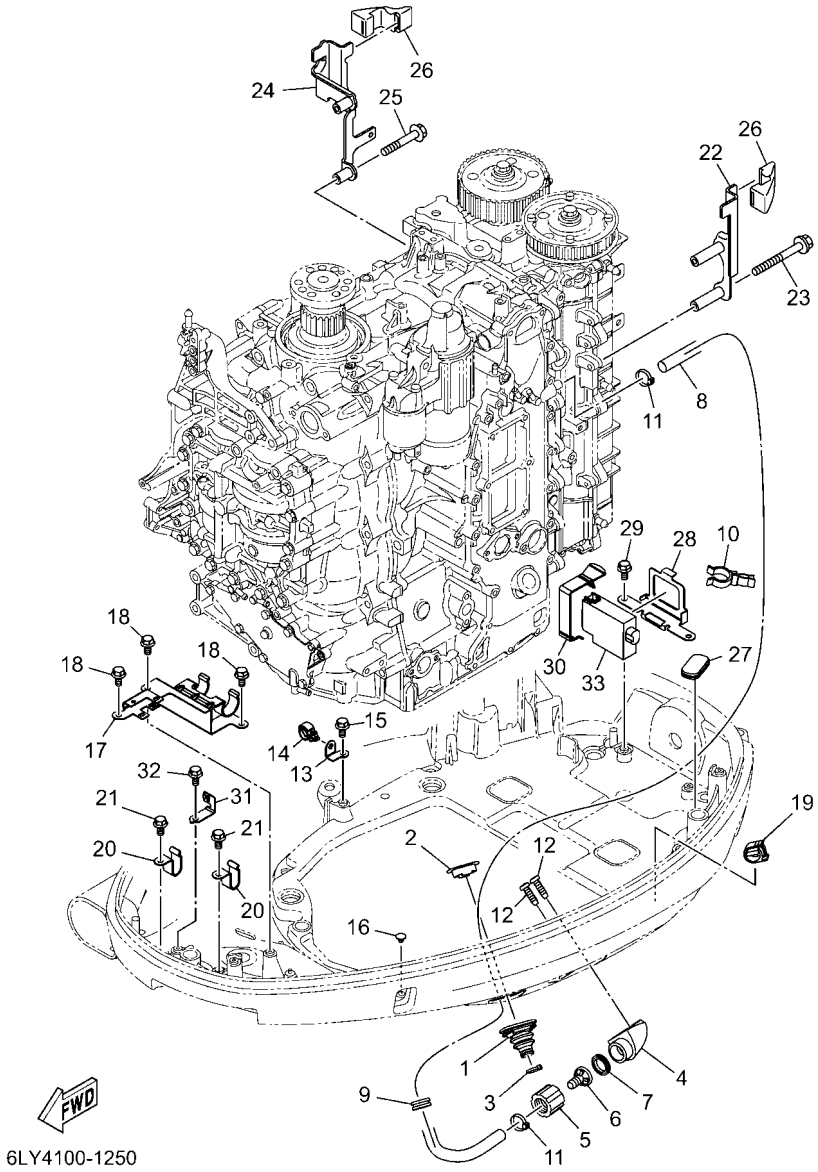

FIG. 25 BOTTOM COWLING 3 — CAPOT INFERIEUR 3

REF. NO.	PART NO. N° PIECES	DESCRIPTION DESCRIPTION	6LY4					REMARKS REMARQUES
28	6LW–42766–00	BRACKET 2 SUPPORT 2	1					
29	95D95–06012	BOLT, FLANGE DEEP RECESS BOULON FIXATION	2					
30	6GR–82131–01	BAND, BATTERY BANDE, DE BATTERIE	1					
31	63P–8366P–01	BRACKET 4 SUPPORT 4	1					
32	95D95–06012	BOLT, FLANGE DEEP RECESS BOULON FIXATION	1					
33	6LW–85335–00	ADAPTER, INTERFACE ADAPTATEUR	1					

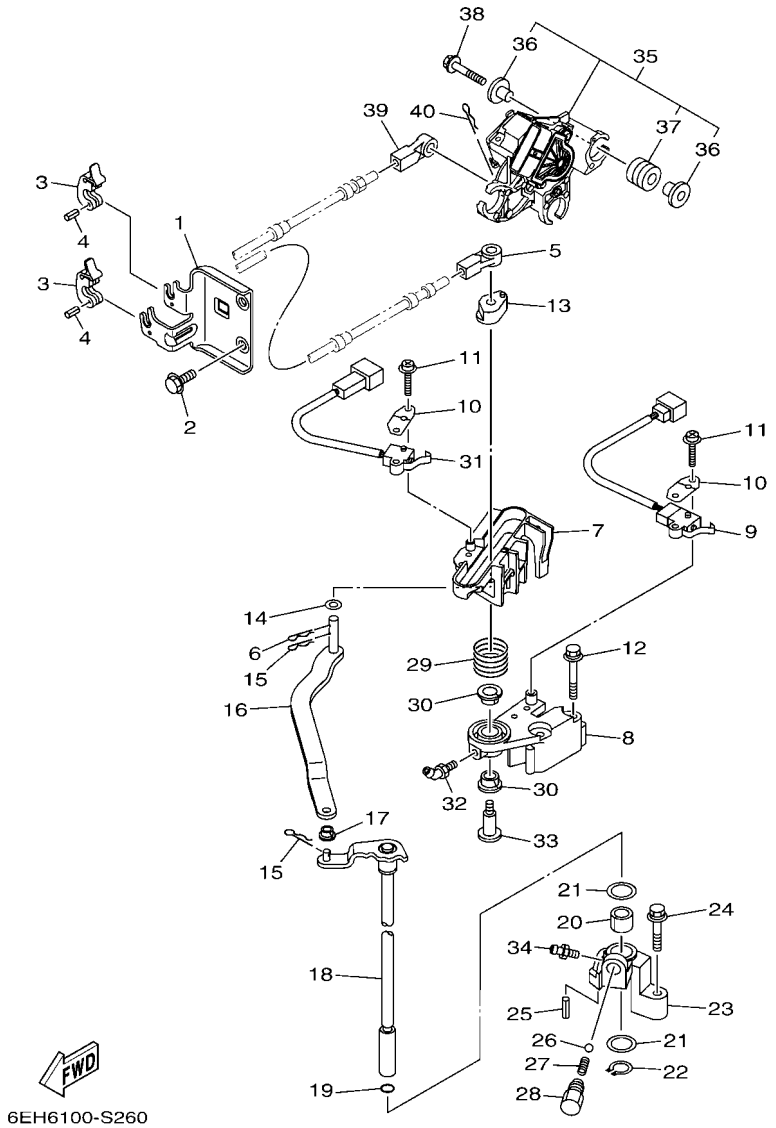

FIG. 26 CONTROL — COMMANDE

REF. NO.	PART NO. N° PIECES	DESCRIPTION DESCRIPTION	6LY4					REMARKS REMARQUES
1	6DA–48531–00	BRACKET, REMOTE CONTROL 1 ETRIER 1, COMMANDE A DISTANCE	1					
2	95D95–08020	BOLT, FLANGE DEEP RECESS BOULON FIXATION	2					
3	6E5–48538–00	CLAMP, CABLE COLLIER	2					
4	91690–30010	PIN, SPRING AGRAFFE	2					
5	6E5–48344–00	CABLE END, REMOTE CONTROL CHAPE CABLE	1					
6	90468–18008	CLIP JONC	1					
7	6DA–44176–00	BRACKET SUPPORT	1					
8	63P–44117–01	BRACKET SUPPORT	1					
9	69J–8259F–00	SWITCH ASSY COMMUTATEUR	1					
10	61A–82588–01	PLATE PLAQUE	2					
11	97985–04116	SCREW, WITH WASHER VIS, AVEC RONDELLE	4					
12	97E95–06550	BOLT, HEXAGON W/W DEEP RECESS VIS HEXAGONAL AVC RONDELLE	2					
13	63P–44122–00	BUSHING, SHIFT ROD LEVER DOUILLE, LEVIER D'EMBRAYAGE	1					
14	90202–08M20	WASHER, PLATE RONDELLE, PLATE	1					
15	90468–18008	CLIP JONC	2					
16	6DA–44121–00	LEVER, SHIFT ROD LEVIER, TIGE D'INVERSION	1					
17	90386–06M12	BUSH DOUILLE	1					
18	6DA–44120–02	HANDLE GEAR SHIFT ASSY LEVIER D'EMBRAYAGE	1					X(25.2") X(25.2")
	6DA–44120–12	HANDLE GEAR SHIFT ASSY LEVIER D'EMBRAYAGE	1					L(20.3") L(20.3")
19	93210–09165	O-RING JOINT TORIQUE	1					
20	90386–16M66	BUSH DOUILLE	1					
21	90202–16061	WASHER, PLATE RONDELLE, PLATE	2					
22	93410–16006	CIRCLIP CIRCLIP	1					
23	63P–44118–00	BRACKET SUPPORT	1					
24	97E75–06535	BOLT, HEXAGON W/W DEEP RECESS VIS HEXAGONAL AVC RONDELLE	1					
25	91690–30010	PIN, SPRING AGRAFFE	1					
26	93501–04M02	BALL BILLE	1					

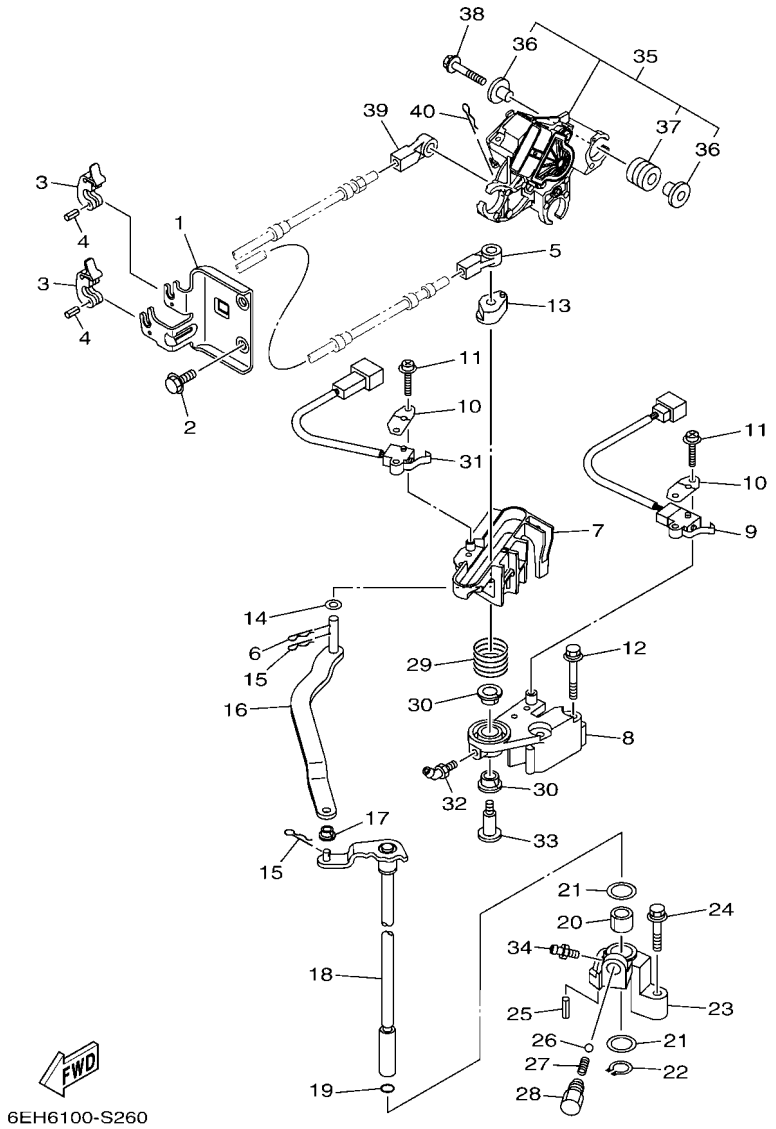

FIG. 26 CONTROL — COMMANDE

REF. NO.	PART NO. N° PIECES	DESCRIPTION DESCRIPTION	6LY4					REMARKS REMARQUES
27	90501–12082	SPRING, COMPRESSION RESSORT, COMPRESSION	1					
28	648–42715–00	BUSHING 2 COUSSINET 2	1					
29	90508–20M31	SPRING, TORSION RESSORT, TORSION	1					
30	90386–12069	BUSH DOUILLE	2					
31	60V–8259F–01	SWITCH ASSY COMMUTATEUR	1					
32	93700–06M01	NIPPLE, GREASE PION	1					
33	90109–08019	BOLT BOULON	1					
34	93700–06M03	NIPPLE, GREASE PION	1					
35	6DA–8A410–02	SENSOR UNIT UNITE DE CAPTEUR	1					
36	69J–13716–00	.COLLAR .COLLERETTE	6					
37	6CB–13593–00	.DAMPER .AMORTISSEUR	3					
38	90119–06297	BOLT, WITH WASHER BOULON, AVEC RONDELLE	3					
39	6E5–48344–00	CABLE END, REMOTE CONTROL CHAPE CABLE	1					
40	90468–18008	CLIP JONC	1					

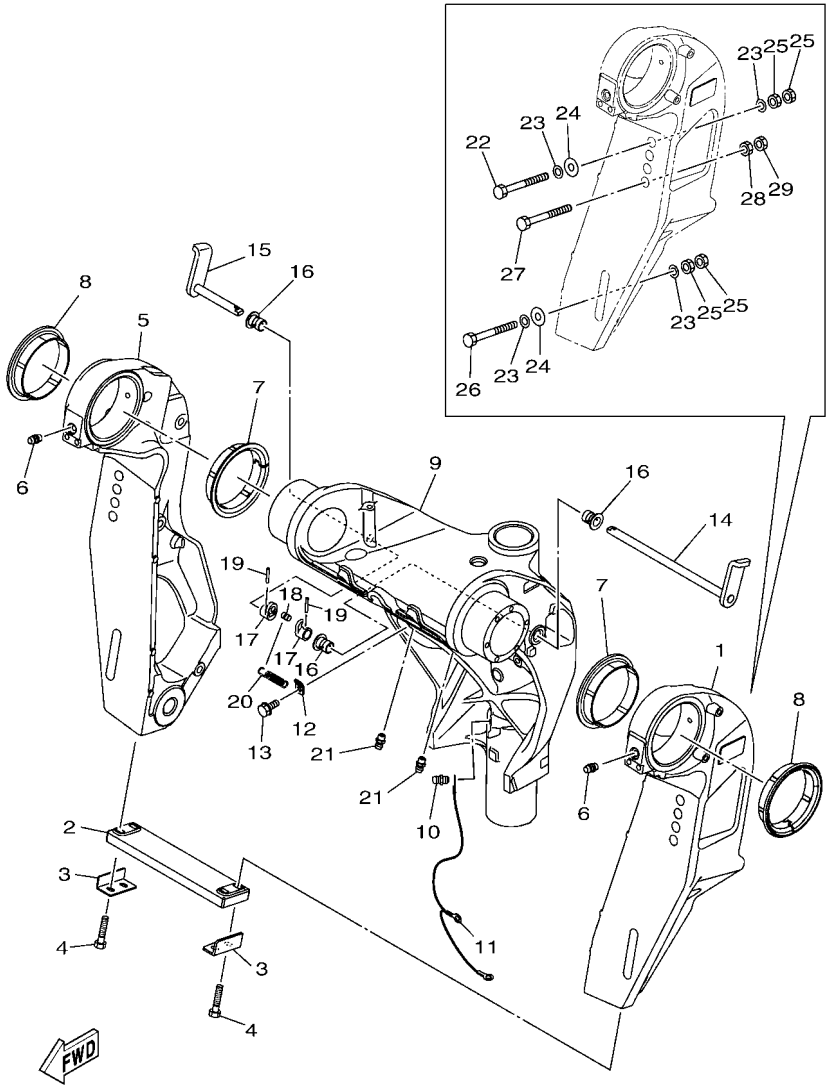

6LP1100-X280

FIG. 27 BRACKET 1 — SUPPORT 1

REF. NO.	PART NO. N° PIECES	DESCRIPTION DESCRIPTION	6LY4					REMARKS REMARQUES
1	6LH–43111–00–8D	BRACKET, CLAMP 1 PRESSE 1	1					
2	6AW–45251–00	ANODE ANODE	1					
3	6G5–44526–00	PLATE PLAQUE	2					
4	97E95–06530	BOLT, HEXAGON W/W DEEP RECESS VIS HEXAGONAL AVC RONDELLE	4					
5	6LH–43112–00–8D	BRACKET, CLAMP 2 PRESSE 2	1					
6	93700–06002	NIPPLE, GREASE PION	2					
7	6LH–43333–00	BUSH. , SWIVEL BRACKET BUISSON. , SUPPORT PIVOTANT	2					
8	6LH–43333–10	BUSH. , SWIVEL BRACKET BUISSON. , SUPPORT PIVOTANT	2					
9	6LH–43311–10–8D	BRACKET, SWIVEL 1 SUPPORT, PIVOT 1	1					X(25.2") X(25.2")
	6LH–43311–00–8D	BRACKET, SWIVEL 1 SUPPORT, PIVOT 1	1					L(20.3") L(20.3")
10	93700–06002	NIPPLE, GREASE PION	1					
11	6DA–82149–00	WIRE, LEAD 3 FIL 3	1					X(25.2") X(25.2")
	66K–82149–00	WIRE, LEAD 3 FIL 3	1					L(20.3") L(20.3")
12	6G5–43144–00	HOOK, SPRING CROCHET	1					
13	97E95–06512	BOLT, HEXAGON W/W DEEP RECESS VIS HEXAGONAL AVC RONDELLE	1					
14	6LH–43181–00	LEVER, TILT STOP 1 LEVIER VERROUILLAGE RELEVAGE 1	1					
15	6LH–43185–00	LEVER, TILT STOP 2 LEVIER VERROUILLAGE RELEVAGE 2	1					
16	90386–10M16	BUSH DOUILLE	3					
17	6G5–43148–00	COLLAR, DISTANCE ENTRETOISE	2					
18	90249–06M19	PIN GOUPILLE	1					
19	91690–30020	PIN, SPRING AGRAFFE	2					
20	90506–16010	SPRING, TENSION RESSORT, TENSION	1					
21	93700–06002	NIPPLE, GREASE PION	2					
22	90101–12070	BOLT (230MM) BOULON (230MM)	2					
23	90201–13M01	WASHER, PLATE RONDELLE, PLATE	8					
24	90201–12426	WASHER, PLATE RONDELLE, PLATE	4					
25	95380–12600	NUT ECROU	8					

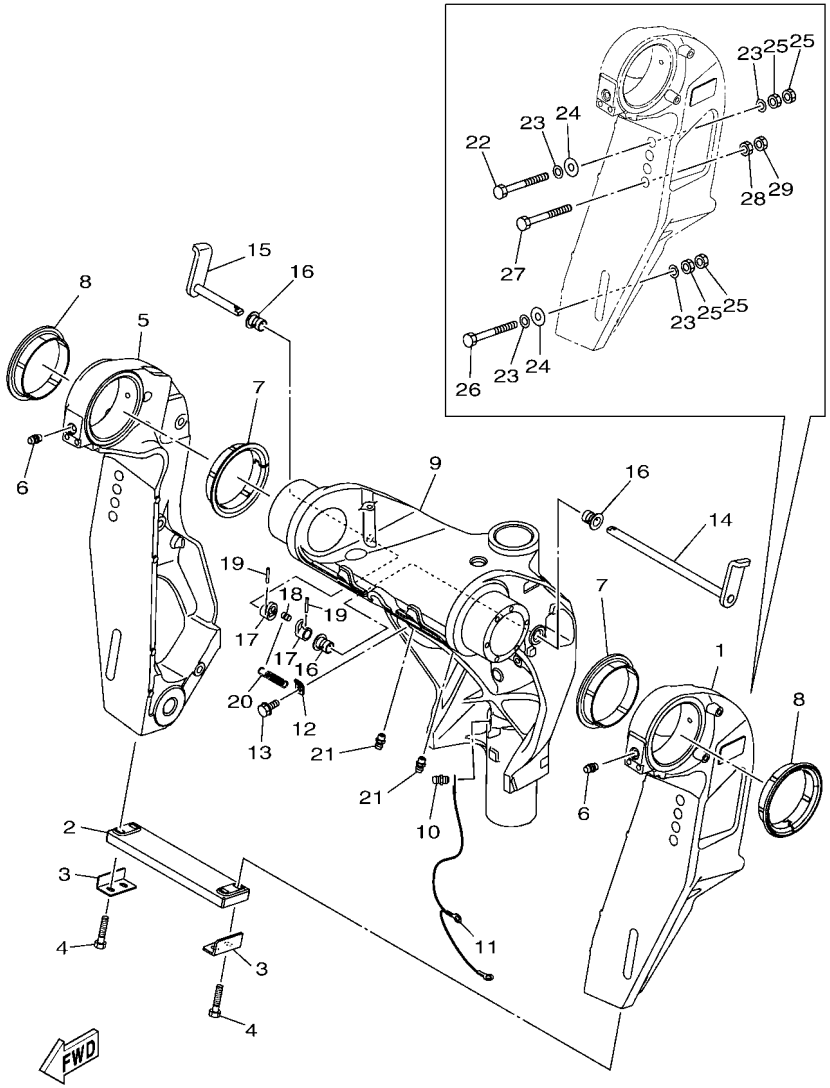

FIG. 27 BRACKET 1 — SUPPORT 1

REF. NO.	PART NO. N° PIECES	DESCRIPTION DESCRIPTION	6LY4					REMARKS REMARQUES
26	90101–12066	BOLT (L:150MM) BOULON (L:150MM)	2					
27	90101–12078	BOLT (L:220MM) BOULON (L:220MM)	2					AP AP
28	95380–12700	NUT ECROU	2					AP AP
29	90170–12M28	NUT ECROU	2					AP AP

FIG. 28 BRACKET 2 — SUPPORT 2

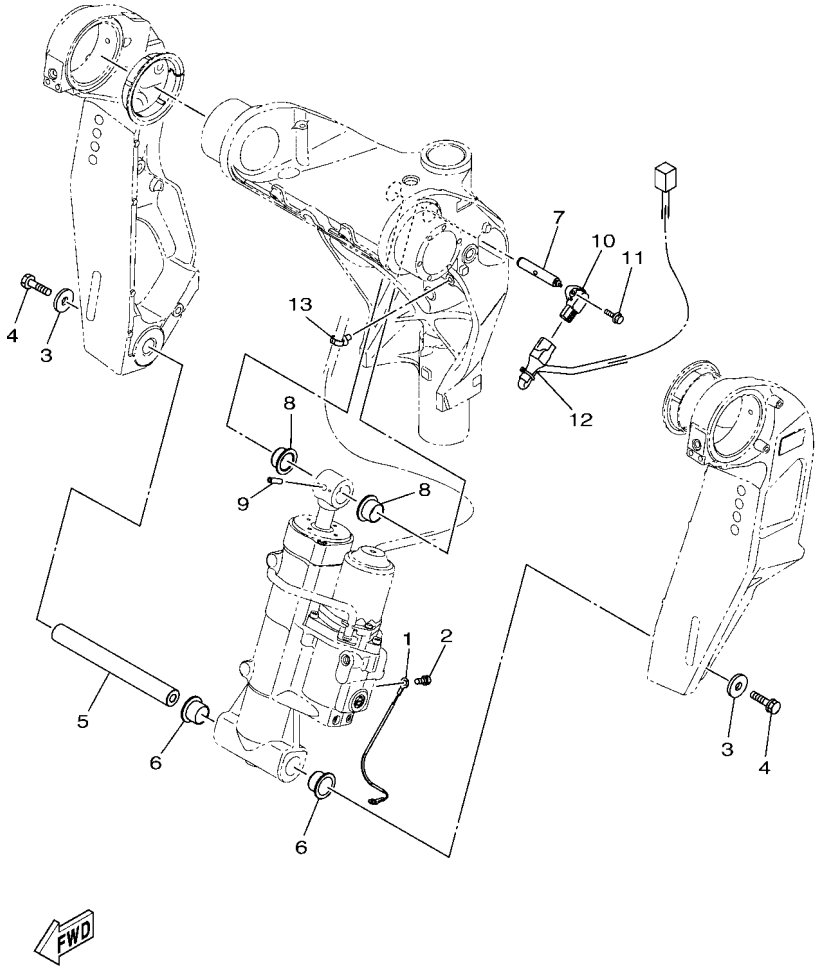

6LH1100-X300

REF. NO.	PART NO. N° PIECES	DESCRIPTION DESCRIPTION	6LY4					REMARKS REMARQUES
1	6T4–82117–00	WIRE, LEAD FIL	1					
2	95D95–06010	BOLT, FLANGE DEEP RECESS BOULON FIXATION	1					
3	90201–10060	WASHER, PLATE RONDELLE, PLATE	2					
4	90119–10054	BOLT, WITH WASHER BOULON, AVEC RONDELLE	2					
5	6BC–43818–00	PIN, LOWER SHOCK MOUNT AXE, INFERIEUR AMORTISSEUR	1					
6	90386–22M98	BUSH DOUILLE	2					
7	6LH–43126–00	PIN, UPPER SHOCK MOUNT AXE, SUPERIEUR AMORTISSEUR	1					
8	90386–22M98	BUSH DOUILLE	2					
9	91690–60022	PIN, SPRING AGRAFFE	1					
10	6GR–85887–00	SENSOR, ANGLE CAPTEUR DE COUPLE	1					
11	97595–05516	BOLT, WITH WASHER VIS HEXAGONAL AVC RONDELLE	2					
12	6LH–82553–00	EXTENSION, WIRE LEAD EXTENSION, FAISCEAU	1					
13	90464–31002	CLAMP BRIDE	1					

FIG. 29 BRACKET 3 SUPPORT 3

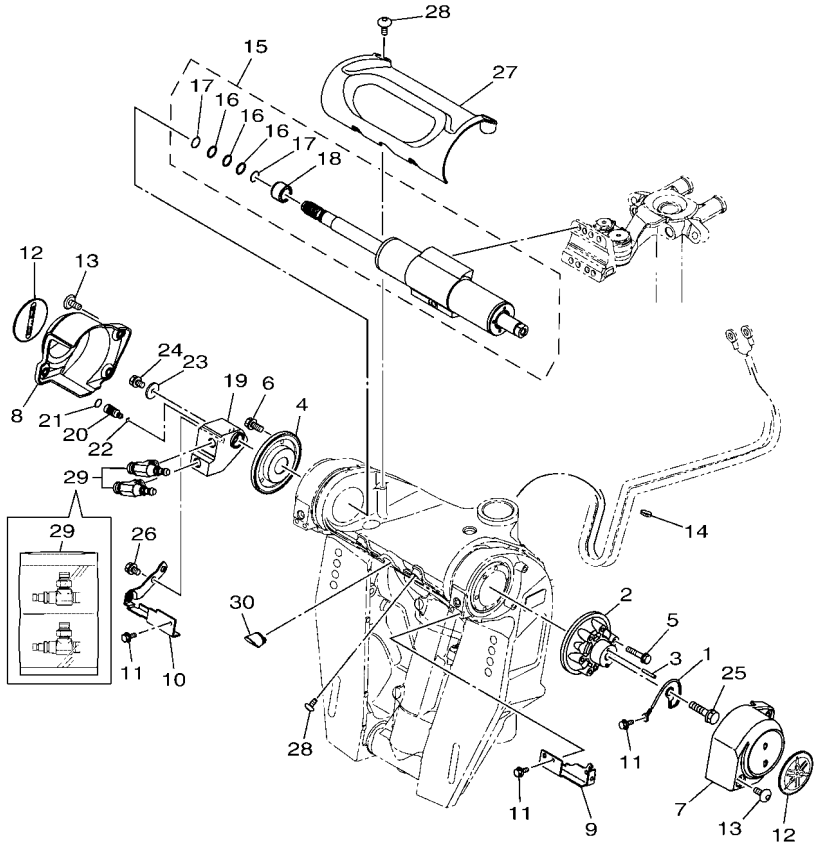

6LP1100-X300

REF. NO.	PART NO. N° PIECES	DESCRIPTION DESCRIPTION	6LY4					REMARKS REMARQUES
1	6LH–82147–00	WIRE, LEAD 5 FIL 5	1					
2	6LH–43341–00	COVER, SWIVEL SIDE 1 COUVERCLE, PIVOTANT COTE 1	1					
3	91690–40025	PIN, SPRING AGRAFFE	1					
4	6LH–43342–00	COVER, SWIVEL SIDE 2 COUVERCLE, PIVOTANT COTE 2	1					
5	90119–06323	BOLT, WITH WASHER BOULON, AVEC RONDELLE	6					
6	97E75–06520	BOLT, HEXAGON W/W DEEP RECESS VIS HEXAGONAL AVC RONDELLE	3					
7	6LP–43381–00–8D	COVER, 2 CACHE 2	1					
8	6LP–43382–00–8D	COVER, 3 CACHE 3	1					
9	6LP–44526–00	PLATE PLAQUE	1					
10	6LP–44536–00	PLATE 2 PLAQUETTE 2	1					
11	97E95–06512	BOLT, HEXAGON W/W DEEP RECESS VIS HEXAGONAL AVC RONDELLE	3					
12	6DA–42697–00	TUNING FORK MARK MARQUE, YAMAHA	2					
13	90111–06144	BOLT, HEXAGON SOCKET BUTTON BOULON	6					
14	90465–11M10	CLAMP BRIDE	1					
15	6LP–61501–00	STEERING CYLINDER ASSY CYLINDRE DE DIRECTION COMPLET	1					
16	93210–15414	.O-RING .JOINT TORIQUE	3					
17	6LH–2312B–00	.RING, BACK UP .SEGMENT	2					
18	6LH–22253–00	.COLLAR, DISTANCE .COLLIER, D'ENTRETOISE	1					
19	6LP–22954–00	ADAPTER ADAPTATEUR	1					
20	6LH–22447–00	NEEDLE, VALVE AIGUILLE DE BOISSEAU	1					
21	93210–10107	O-RING JOINT TORIQUE	1					
22	93210–03494	O-RING JOINT TORIQUE	1					
23	6LH–43627–00	STOPPER PLAQUETTE	1					
24	97D95–06008	BOLT, HEXAGON DEEP RECESS VIS HEXAGONAL	1					
25	90119–10058	BOLT, WITH WASHER BOULON, AVEC RONDELLE	1					
26	97E95–06512	BOLT, HEXAGON W/W DEEP RECESS VIS HEXAGONAL AVC RONDELLE	2					
27	6LH–43318–00–8D	COVER CAPUCHON	1					

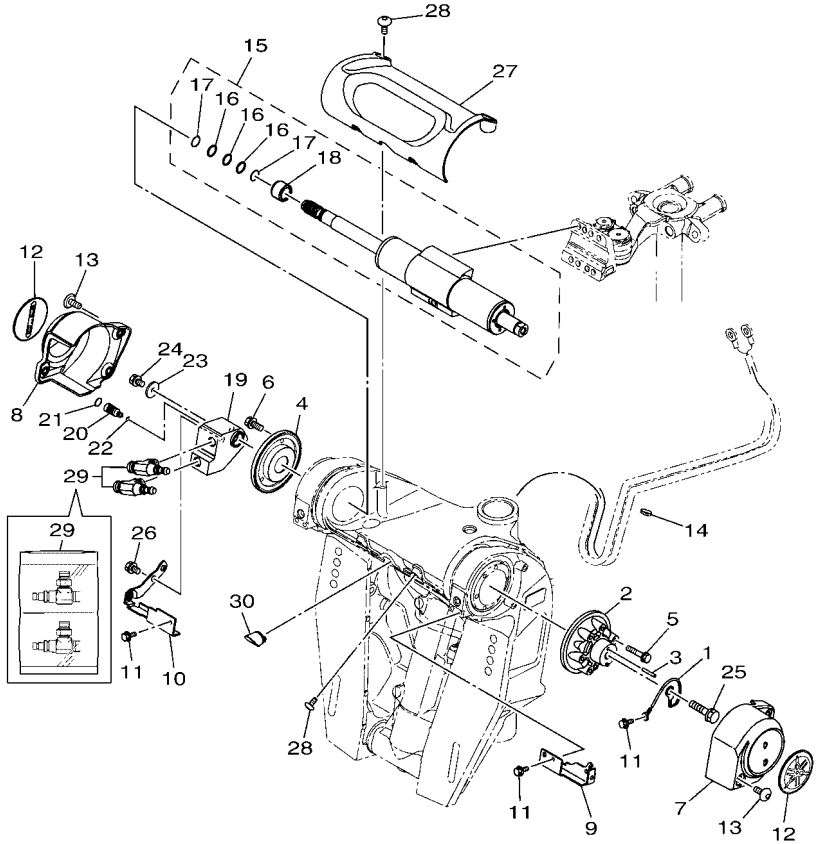

6LP1100-X300

FIG. 29 BRACKET 3 — SUPPORT 3

REF. NO.	PART NO. N° PIECES	DESCRIPTION DESCRIPTION	6LY4					REMARKS REMARQUES
28	90111–06144	BOLT, HEXAGON SOCKET BUTTON BOULON	4					
29	6LW–61385–00	FITTING, HOSE RACCORD, TUYAU	1					
30	6LH–43885–00	GROMMET PASSE-FIL	1					

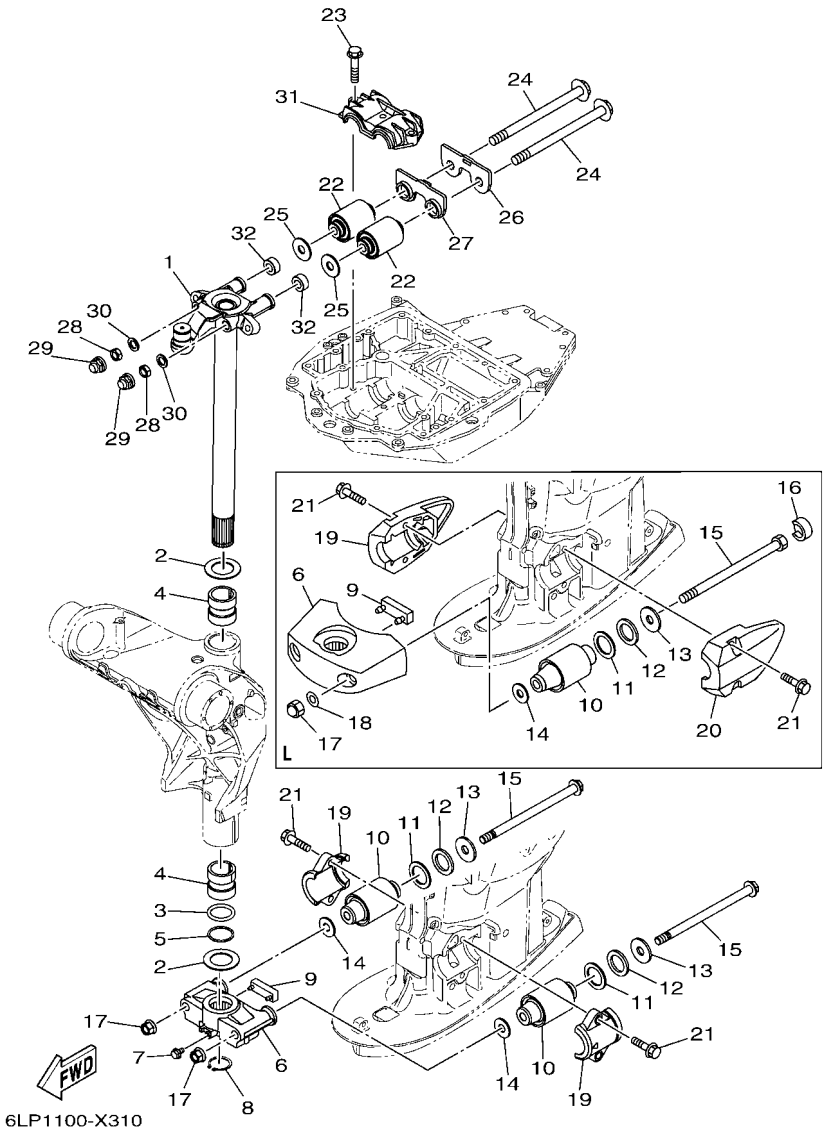

FIG. 30 BRACKET 4 — SUPPORT 4

REF. NO.	PART NO. N° PIECES	DESCRIPTION DESCRIPTION	6LY4					REMARKS REMARQUES
1	6LP–42510–10–8D	STEERING BRACKET ASSY DIRECTION SUPPORT (ENS.)	1					X(25.2") X(25.2")
	6LP–42510–00–8D	STEERING BRACKET ASSY DIRECTION SUPPORT (ENS.)	1					L(20.3") L(20.3")
2	90201–38M60	WASHER, PLATE RONDELLE, PLATE	2					
3	93210–37MH7	O-RING JOINT TORIQUE	1					
4	90386–38M32	BUSH DOUILLE	2					
5	90202–40M47	WASHER, PLATE RONDELLE, PLATE	1					
6	6DA–44551–00–CA	HOUSING, LOWER MOUNT RUBBER 1 BOITIER, SILENT-BLOC INFERIEUR	1					X(25.2") X(25.2")
	68V–44551–00–8D	HOUSING, LOWER MOUNT RUBBER 1 BOITIER, SILENT-BLOC INFERIEUR	1					L(20.3") L(20.3")
7	95D95–06010	BOLT, FLANGE DEEP RECESS BOULON FIXATION	1					X(25.2") X(25.2")
8	93410–36102	CIRCLIP CIRCLIP	1					
9	6DA–44575–00	DAMPER, LOWER MOUNT RUBBER SILENT-BLOC, INFERIEUR	1					X(25.2") X(25.2")
	61A–44575–01	DAMPER, LOWER MOUNT RUBBER SILENT-BLOC, INFERIEUR	1					L(20.3") L(20.3")
10	63P–44555–00	MOUNT DAMPER, LOWER SIDE SILENT-BLOC, INFERIEUR LATERAL	2					X(25.2") X(25.2")
	60V–44555–00	MOUNT DAMPER, LOWER SIDE SILENT-BLOC, INFERIEUR LATERAL	2					L(20.3") L(20.3")
11	90201–35008	WASHER, PLATE RONDELLE, PLATE	2					
12	90202–32M19	WASHER, PLATE RONDELLE, PLATE	2					
13	90201–16M55	WASHER, PLATE RONDELLE, PLATE	2					
14	90201–15M58	WASHER, PLATE RONDELLE, PLATE	2					
15	90105–14012	BOLT, FLANGE BOULON, A COLLERETTE	2					X(25.2") X(25.2")
	90101–14005	BOLT BOULON	2					L(20.3") L(20.3")
16	69J–44533–00	DAMPER, UPPER MOUNT RUBBER COUVERCLE, SUSPENSION INFERIEU	2					L(20.3") L(20.3")
17	95604–14200	NUT, SELF-LOCKING ECROU, AUTO-BLOCANT	2					X(25.2") X(25.2")
	90176–14002	NUT, CAP ECROU, BOUCHON	2					L(20.3") L(20.3")
18	92995–14600	WASHER RONDELLE	2					L(20.3") L(20.3")
19	6DA–44552–00–CA	HOUSING, LOWER MOUNT RUBBER 2 BOITIER, SILENT-BLOC INFERIEUR	2					X(25.2") X(25.2")
	63P–44553–00–8D	COVER, LOWER MOUNT COUVERCLE, SUSPENSION INFERIEU	1					L(20.3") L(20.3")
20	63P–44556–00–8D	COVER, LOWER MOUNT 2 COUVERCLE,SUSPENSION INFERIEU	1					L(20.3") L(20.3")

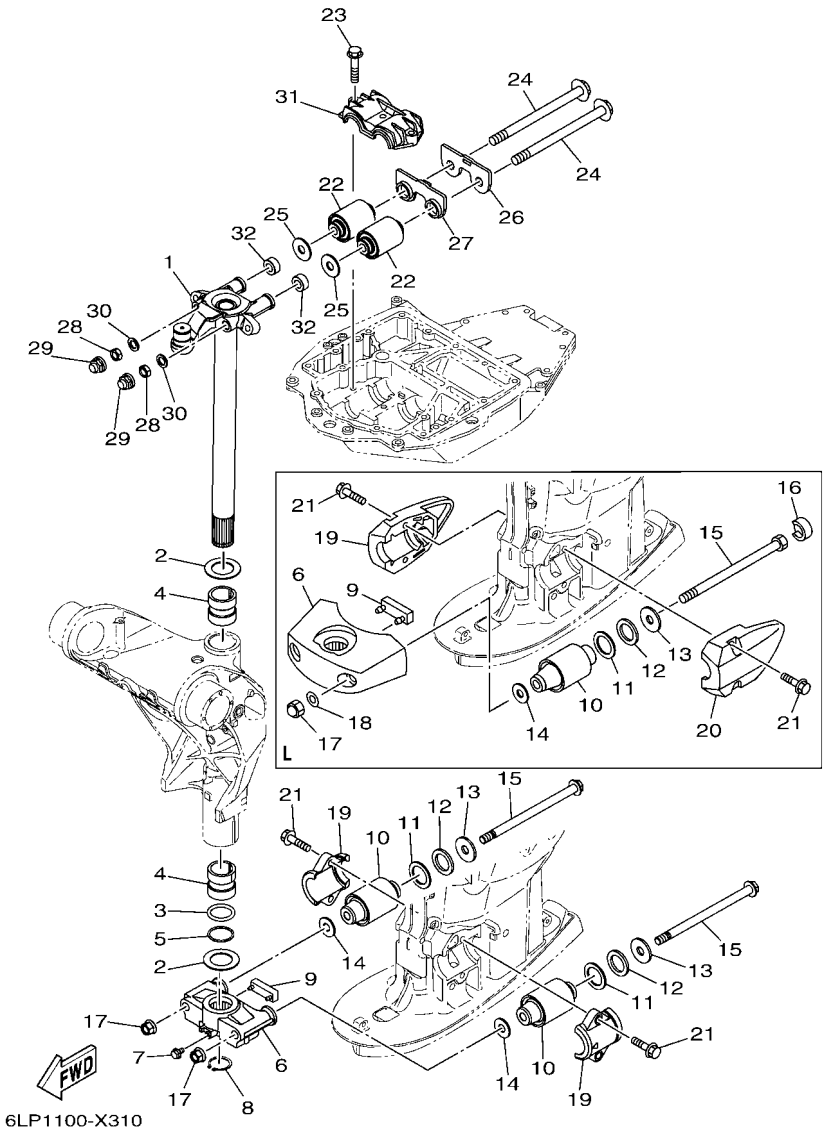

FIG. 30 BRACKET 4 — SUPPORT 4

REF. NO.	PART NO. N° PIECES	DESCRIPTION DESCRIPTION	6LY4					REMARKS REMARQUES
21	90119–10058	BOLT, WITH WASHER BOULON, AVEC RONDELLE	4					
22	6DA–44514–00	MOUNT DAMPER, UPPER SIDE SILENT-BLOC, SUPERIEUR LATERAL	2					
23	90119–10024	BOLT, WITH WASHER BOULON, AVEC RONDELLE	3					
24	90105–14012	BOLT, FLANGE BOULON, A COLLERETTE	2					
25	90201–16M01	WASHER, PLATE RONDELLE, PLATE	2					
26	6DA–44526–00	PLATE PLAQUE	1					
27	6DA–44532–00	STOPPER, UPPER MOUNT PLAQUETTE	1					
28	90185–14M00	NUT, SELF-LOCKING ECROU,AUTO-BLOQUANT	2					
29	6DA–44194–00	CAP CAPUCHON	2					
30	92995–14600	WASHER RONDELLE	2					
31	63P–44511–00	COVER, UPPER MOUNT COUVERCLE, SUSPENSION SUPERIEU	1					
32	90387–14004	COLLAR COLLERETTE	2					

FIG. 31 BRACKET 5 SUPPORT 5

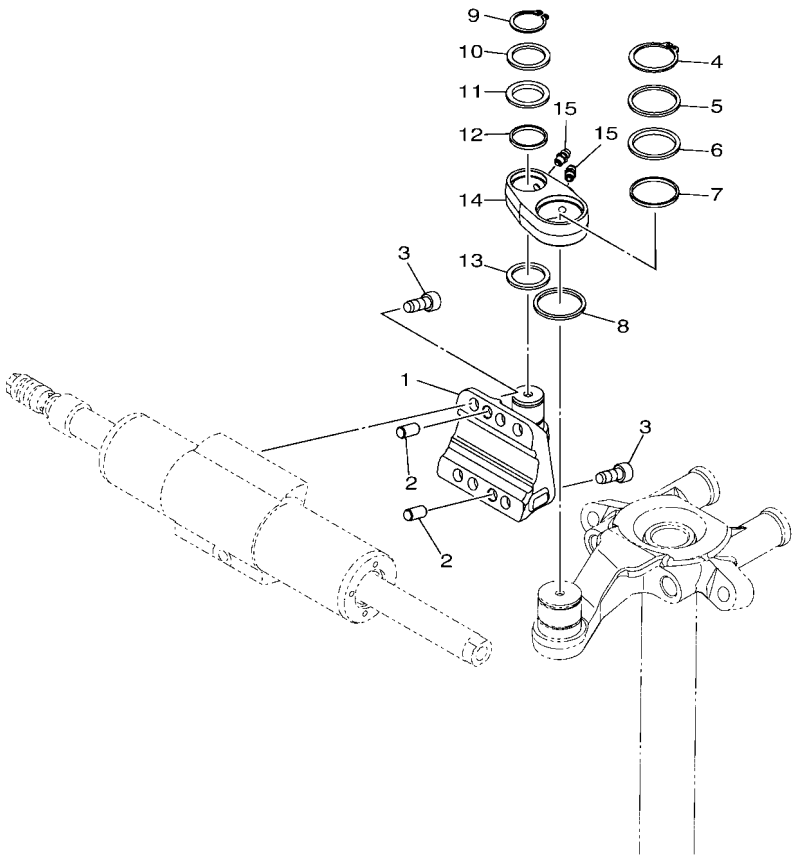

6LP1100-X320

REF. NO.	PART NO. N° PIECES	DESCRIPTION DESCRIPTION	6LY4					REMARKS REMARQUES
1	6LP–43676–00–8D	HOOK CROCHET	1					
2	93608–16M16	PIN, DOWEL AXE	2					
3	90110–08133	BOLT, HEXAGON SOCKET HEAD BOULON, TETE HEXAGONALE CREUSE	6					
4	93410–30101	CIRCLIP CIRCLIP	1					
5	90201–31008	WASHER, PLATE RONDELLE, PLATE	1					
6	90387–30015	COLLAR COLLERETTE	1					
7	93210–29282	O-RING JOINT TORIQUE	1					
8	90202–31001	WASHER, PLATE RONDELLE, PLATE	1					
9	93410–22M11	CIRCLIP CIRCLIP	1					
10	90201–23018	WASHER, PLATE RONDELLE, PLATE	1					
11	90387–22040	COLLAR COLLERETTE	1					
12	93210–22298	O-RING JOINT TORIQUE	1					
13	90202–23001	WASHER, PLATE RONDELLE, PLATE	1					
14	6LP–48133–00	PLATE, LINK PLAQUE, BIELLETTE	1					
15	93700–06002	NIPPLE, GREASE PION	2					

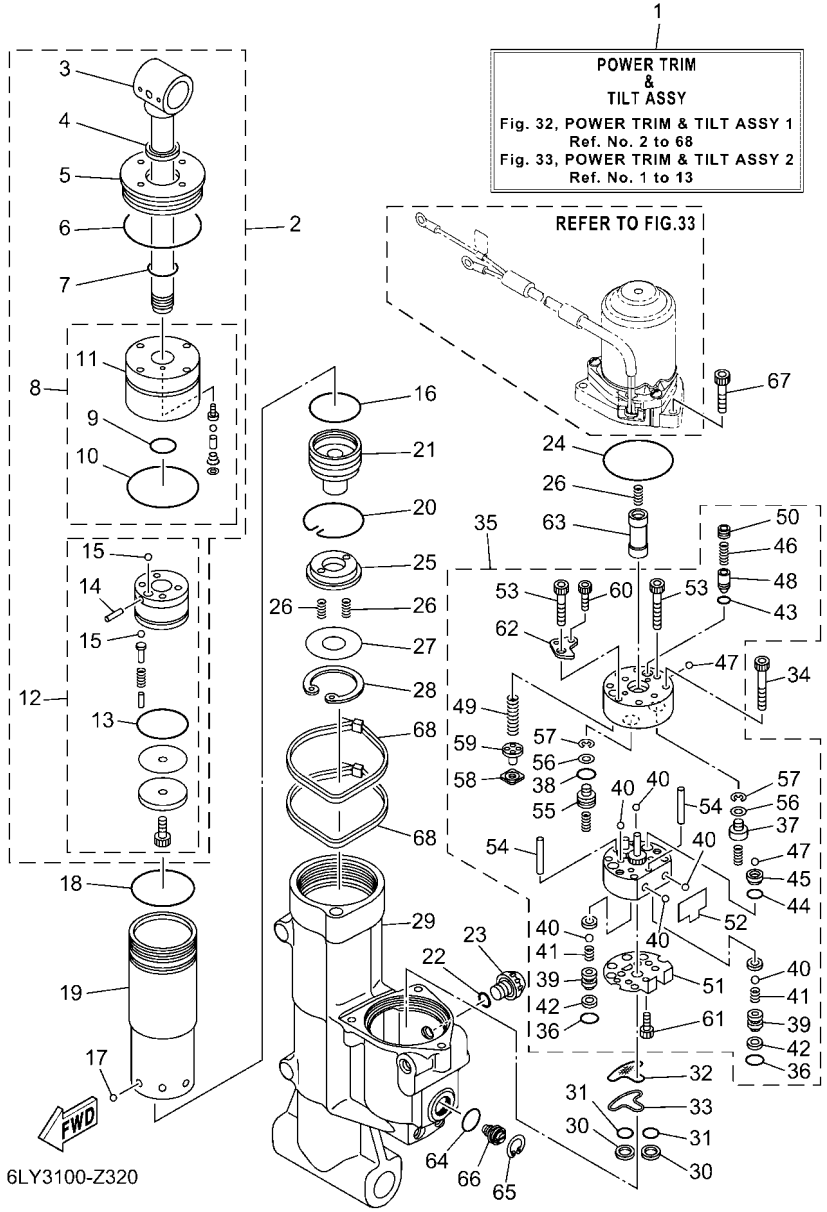

FIG. 32 POWER TRIM & TILT ASSY 1 — PUISSANCE PARER ET INCLINER 1

REF. NO.	PART NO. N° PIECES	DESCRIPTION DESCRIPTION	6LY4					REMARKS REMARQUES
1	6LH–43800–02	POWER TRIM & TILT ASSY PUISSANCE PARER ET INCLINER (E	1					
2	6LH–43810–00	TILT PISTON SUB ASSY INCLINER PISTON AUXILIAIRE(ENS	1					
3	6LH–43801–00	.ROD .TIGE	1					
4	93106–19001	.OIL SEAL .JOINT SPY	1					
5	6LH–43821–00	.SCREW, TRIM CYLINDER END .VIS	1					
6	6EK–43861–00	.O-RING .JOINT TORIQUE	1					
7	63P–43863–10	.O-RING .JOINT TORIQUE	1					
8	6LH–4380R–00	.CYLINDER END SUB ASSY .CYLINDRE RACCORD (ENS.)	1					
9	63P–43863–10	..O-RING ..JOINT TORIQUE	1					
10	67F–43865–00	..O-RING ..JOINT TORIQUE	1					
11	6LH–43811–00	..SCREW, CYLINDER END ..VIS, CYLINDRE RACCORD	1					
12	6LH–4380P–00	.PISTON SUB ASSY .PISTON AUXILIAIRE (ENS.)	1					
13	6H1–43862–00	..O-RING ..JOINT TORIQUE	1					
14	91609–16010	..PIN, SPRING ..AXE DE RESSORT	1					
15	93505–32038	..BALL ..BILLE	5					
16	6H1–43862–00	O-RING JOINT TORIQUE	1					
17	93503–16003	BALL BILLES	6					
18	7BB–G3861–00	O-RING JOINT TORIQUE	1					
19	6LH–22471–00	CYLINDER, SHOCK ABSORBER CYLINDRE, AMORTISSEUR	1					
20	6EK–43875–00	RING, SNAP RESSORT	1					
21	6EK–4381B–00	FREE PISTON SUB ASSY PISTON AUXILIAIRE (ENS.)	1					
22	6CJ–43861–10	O-RING JOINT TORIQUE	1					
23	6CJ–43829–20	PLUG, RESERVOIR BOUCHON	1					
24	93210–68N50	O-RING JOINT TORIQUE	1					
25	6EK–43899–00	PLATE STOPPER PLAQUETTE	1					
26	62X–4384H–00	SPRING RESSORT	3					
27	6EK–22434–00	PLATE, VALVE 1 PLATEAU, SOUPAPE 1	1					

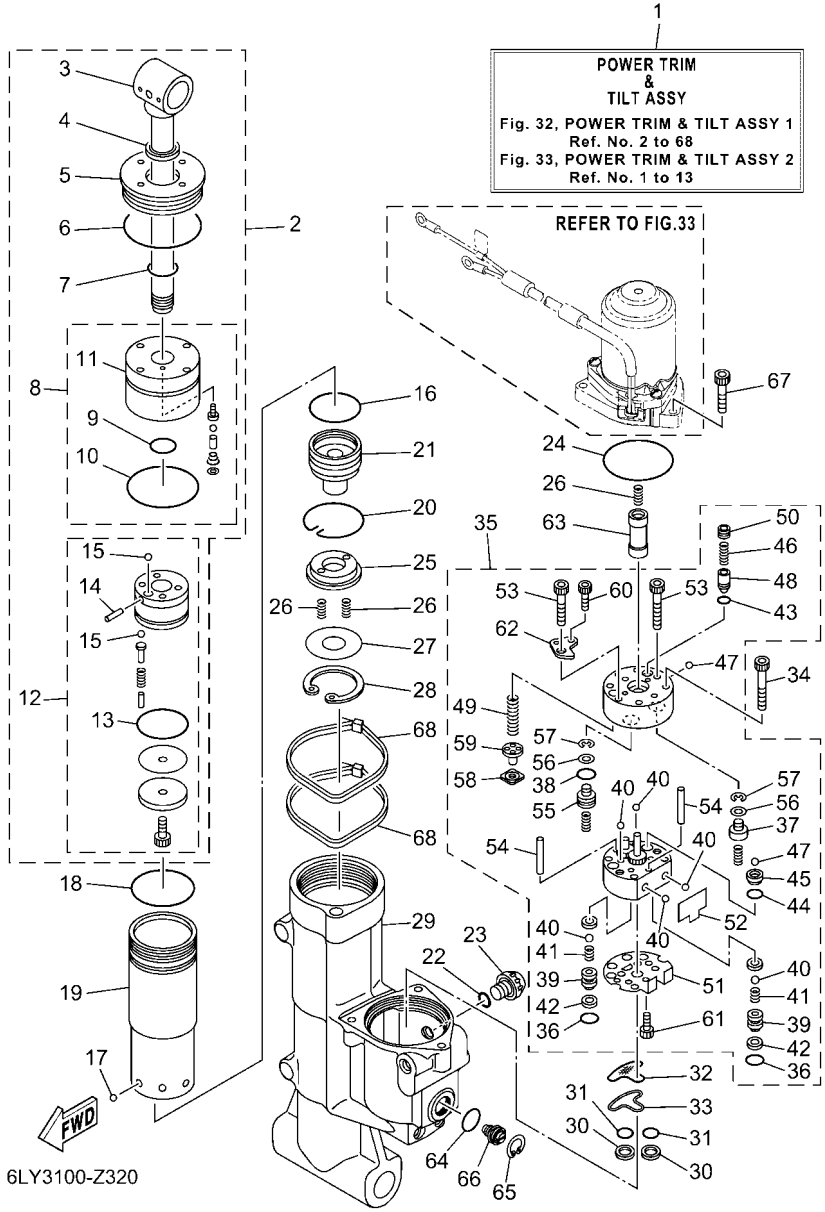

FIG. 32 POWER TRIM & TILT ASSY 1 — PUISSANCE PARER ET INCLINER 1

REF. NO.	PART NO. N° PIECES	DESCRIPTION DESCRIPTION	6LY4					REMARKS REMARQUES
28	99009–47500	CIRCLIP CIRCLIP	1					
29	6LH–4380K–02	CYLINDER, TILT SUB ASSY CYLINDRE	1					
30	6C6–43817–00	FILTER 2 FILTRE 2	2					
31	69J–4389J–00	O-RING JOINT TORIQUE	2					
32	6C5–43816–00	FILTER 1 FILTRE 1	1					
33	6C5–4380G–00	PLATE PLAQUE	1					
34	91318–05045	BOLT BOULON	4					
35	6EK–43830–00	GEAR PUMP ASSY POMPE A PIGNON (ENS.)	1					
36	69J–4389J–00	.O-RING .JOINT TORIQUE	2					
37	6D8–4384M–00	.PISTON, SHUTTLE 2 .PISTON 2	1					
38	6H1–43883–00	.O-RING .JOINT TORIQUE	1					
39	6EK–4382E–00	.ADAPTOR 2 .ADAPTEUR 2	2					
40	93505–32038	.BALL .BILLE	6					
41	6C6–43853–00	.SPRING, MAIN VALVE .RESSORT	2					
42	6C6–4387G–00	.WASHER .RONDELLE	2					
43	93210–04N51	.O-RING .JOINT TORIQUE	1					
44	93210–064A5	.O-RING .JOINT TORIQUE	1					
45	6D8–43851–00	.SEAT, RELIEF VALVE .SIEGE	1					
46	6C5–43855–10	.SPRING, UP RELIEF .RESSORT	1					
47	93501–08001	.BALL .BILLE	2					
48	6D8–43844–00	.PIN, VALVE SUPPORT .GOUPILLE	1					
49	6EK–43856–00	.SPRING, DOWN RELIEF .RESSORT	1					
50	6D8–43843–00	.SCREW, VALVE LOCK .VIS	1					
51	6C5–43895–00	.SEAT, RELIEF VALVE .SIEGE	1					
52	6C5–43854–00	.SPRING, MANUAL RELEASE .RESSORT	1					
53	91318–05030	.BOLT .BOULON	2					
54	93604–26256	.PIN, DOWEL .CLAVETTE	2					

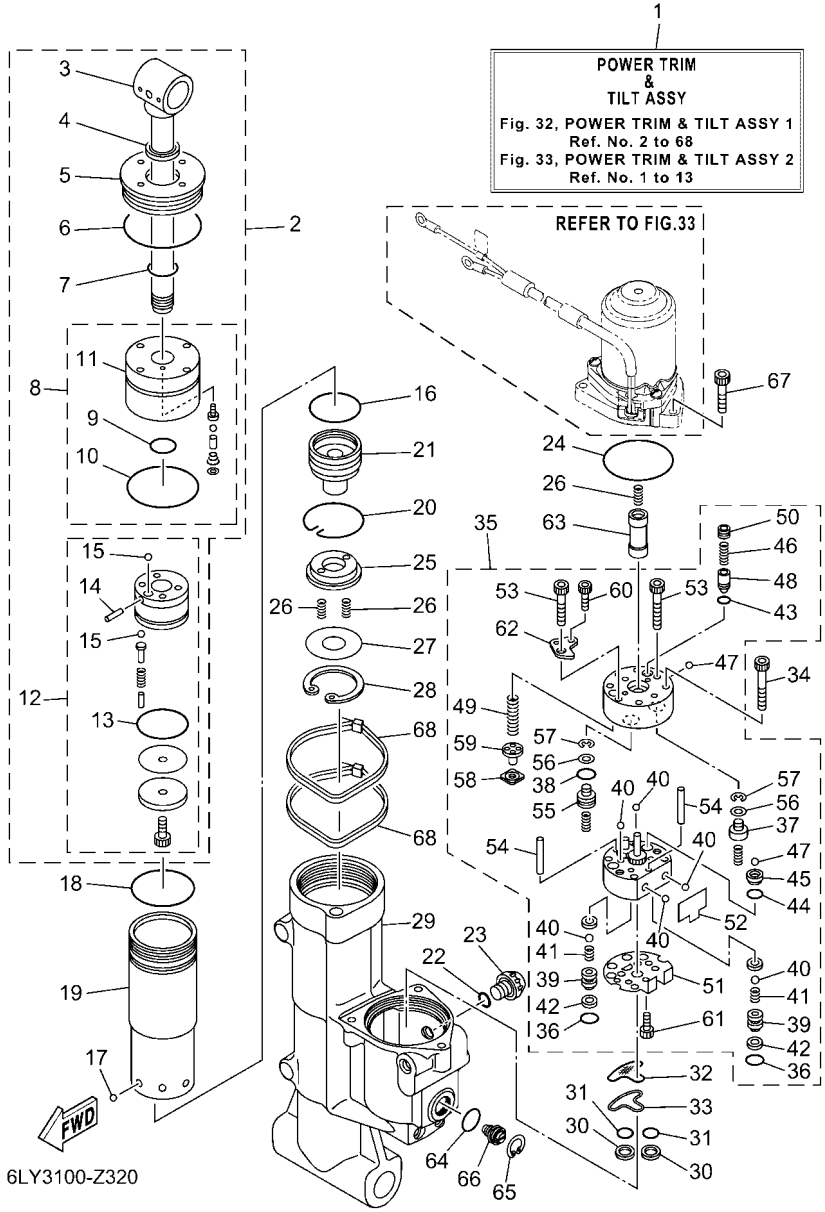

FIG. 32 POWER TRIM & TILT ASSY 1 — PUISSANCE PARER ET INCLINER 1

REF. NO.	PART NO. N° PIECES	DESCRIPTION DESCRIPTION	6LY4					REMARKS REMARQUES
55	6D8–43841–00	.PISTON, SHUTTLE .PISTON	1					
56	69A–4384F–00	.SEAL, MAIN VALVE .JOINT	2					
57	99002–03600	.CIRCLIP .CIRCLIP	2					
58	6H1–4384G–11	.SEAL, RELIEF VALVE .JOINT	1					
59	6H1–43844–10	.PIN, VALVE SUPPORT .GOUPILLE	1					
60	91318–03025	.BOLT .BOULON	2					
61	91318–03005	.BOLT .BOULON	1					
62	6D8–4382L–00	.CAP, RELIEF VALVE .CAPUCHON	1					
63	6EK–43831–00	CONNECTOR, SHAFT RACCORD	1					
64	93210–12327	O-RING JOINT TORIQUE	1					
65	61A–43876–00	RING, SNAP RESSORT	1					
66	6GR–43845–00	SCREW, MANUAL RELEASE VIS	1					
67	91380–06025	BOLT BOULON	3					
68	90464–99004	CLAMP BRIDE	2					

FIG. 33 POWER TRIM & TILT ASSY 2 — PUISSANCE PARER ET INCLINER 2

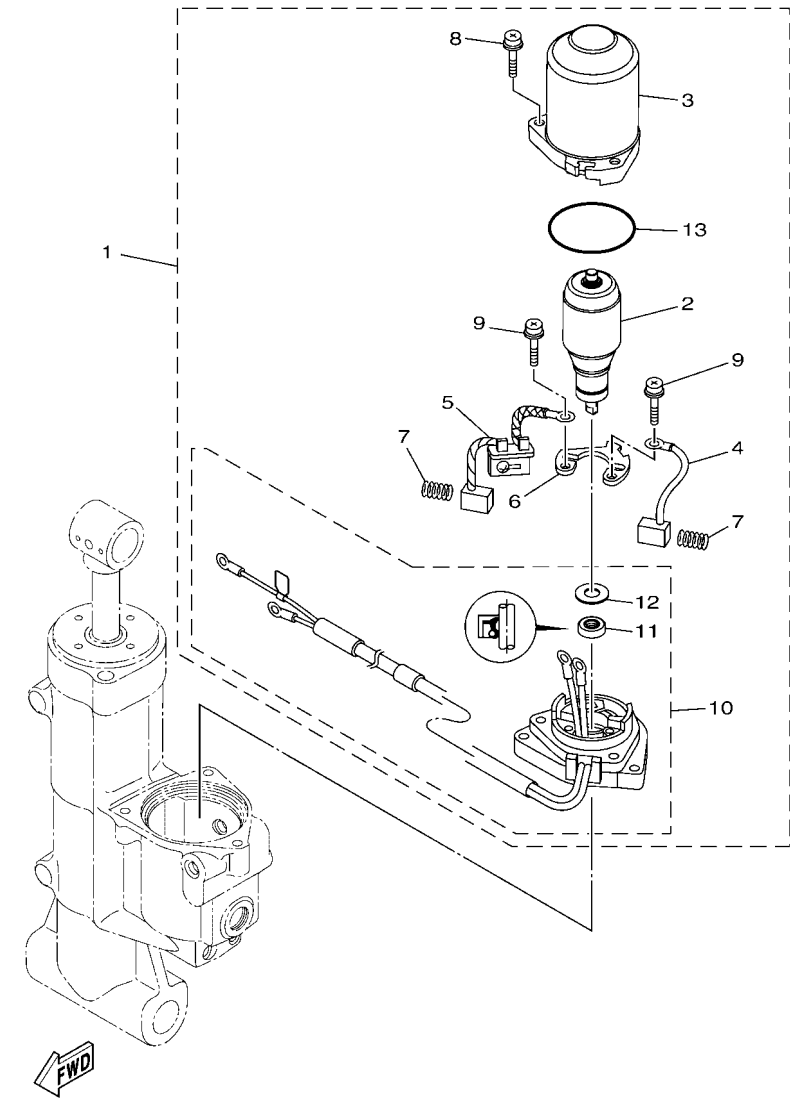

6LH1100-X350

REF. NO.	PART NO. N° PIECES	DESCRIPTION DESCRIPTION	6LY4					REMARKS REMARQUES
1	6LH–43880–01	MOTOR ASSY MOTEUR (ENS.)	1					
2	6LH–43805–10	.ARMATURE ASSY .INDUIT (ENS.)	1					
3	6EK–43804–20	.STATOR ASSY .STATOR (ENS.)	1					
4	6EK–43892–10	.BRUSH 2 .BALAI 2	1					
5	63P–82181–20	.CIRCUIT BREAKER COMP. .RUPTEUR COMPLET	1					
6	6EK–4380F–00	.PLATE, BRUSH HOLDER .PLAQUE	1					
7	62X–4386K–00	.SPRING, BRUSH .RESSORT, BALAI	2					
8	63P–43879–10	.SCREW, WITH WASHER .VIS, AVEC RONDELLE	3					
9	97602–04316	.SCREW, PAN HEAD WITH WASHER .VIS, AVEC RONDELLE	2					
10	6LH–43881–01	.FRAME, END .BATI	1					
11	6LH–43882–10	..OIL SEAL ..JOINT SPI	1					
12	90201–12069	..WASHER, PLATE ..RONDELLE, PLATE	1					
13	93210–55001	.O-RING .JOINT TORIQUE	1					

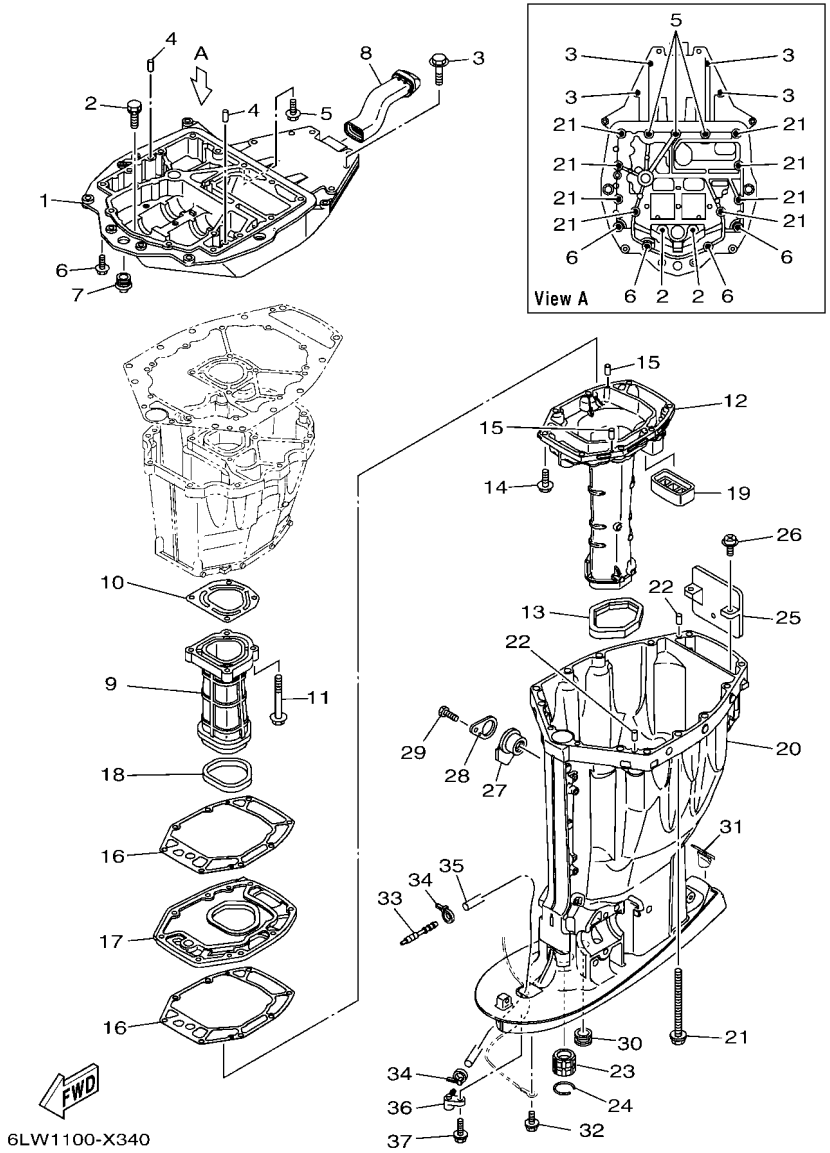

FIG. 34 UPPER CASING FOURREAU

REF. NO.	PART NO. N° PIECES	DESCRIPTION DESCRIPTION	6LY4					REMARKS REMARQUES
1	63P–41137–07–CA	GUIDE, EXHAUST COLLECTEUR D'ECHAPPEMENT	1					
2	90119–08182	BOLT, WITH WASHER BOULON, AVEC RONDELLE	2					
3	97E75–10545	BOLT, HEXAGON W/W DEEP RECESS VIS HEXAGONAL AVC RONDELLE	4					
4	93608–16M16	PIN, DOWEL AXE	2					
5	90119–08189	BOLT, WITH WASHER BOULON, AVEC RONDELLE	3					
6	97E75–10535	BOLT, HEXAGON W/W DEEP RECESS VIS HEXAGONAL AVC RONDELLE	4					
7	6E5–42724–01	GROMMET PASSE-FIL	1					
8	6LH–42769–00	SEAL, RUBBER BOURRELET, CAOUTCHOUC	1					
9	63P–41131–02	MANIFOLD, EXT. 1 PIPE D'ECHAPPEMENT	1					
10	63P–41133–A0	GASKET, EXHAUST MANIFOLD 1 JOINT, PIPE D'ECHAPPEMENT	1					
11	97E75–08560	BOLT, HEXAGON W/W DEEP RECESS VIS HEXAGONAL AVC RONDELLE	4					
12	6DA–14711–01	MUFFLER 1 POT D'ECHAPPEMENT 1	1					X(25.2") X(25.2")
	6DA–14711–11	MUFFLER 1 POT D'ECHAPPEMENT 1	1					L(20.3") L(20.3")
13	69J–45123–00	GASKET, MUFFLER JOINT, POT DE DETENTE	1					
14	97E75–08535	BOLT, HEXAGON W/W DEEP RECESS VIS HEXAGONAL AVC RONDELLE	8					
15	93606–19M23	PIN, DOWEL GOUPILLE	2					
16	63P–41134–A1	GASKET, EXHAUST MANIFOLD 2 JOINT, PIPE D'ECHAPPEMENT 2	2					
17	63P–45181–02	PLATE PLAQUETTE	1					
18	63P–41138–00	SEAL, EXT. 1 JOINT DE GROUPE 1	1					
19	69J–45127–01	SEAL JOINT	1					
20	6LH–45111–00–8D	CASING, UPPER FOURREAU	1					X(25.2") X(25.2")
	6DA–45111–10–8D	CASING, UPPER FOURREAU	1					L(20.3") L(20.3")
21	90119–10007	BOLT, WITH WASHER BOULON, AVEC RONDELLE	8					
22	93608–16M16	PIN, DOWEL AXE	2					
23	6E5–45318–00	BUSHING, DRIVE SHAFT DOUILLE, ARBRE MOTEUR	1					
24	93420–36M01	CIRCLIP CIRCLIP, TYPE S	1					
25	69J–14624–01	COVER, EXHAUST CACHE D'ECHAPPEMENT	1					

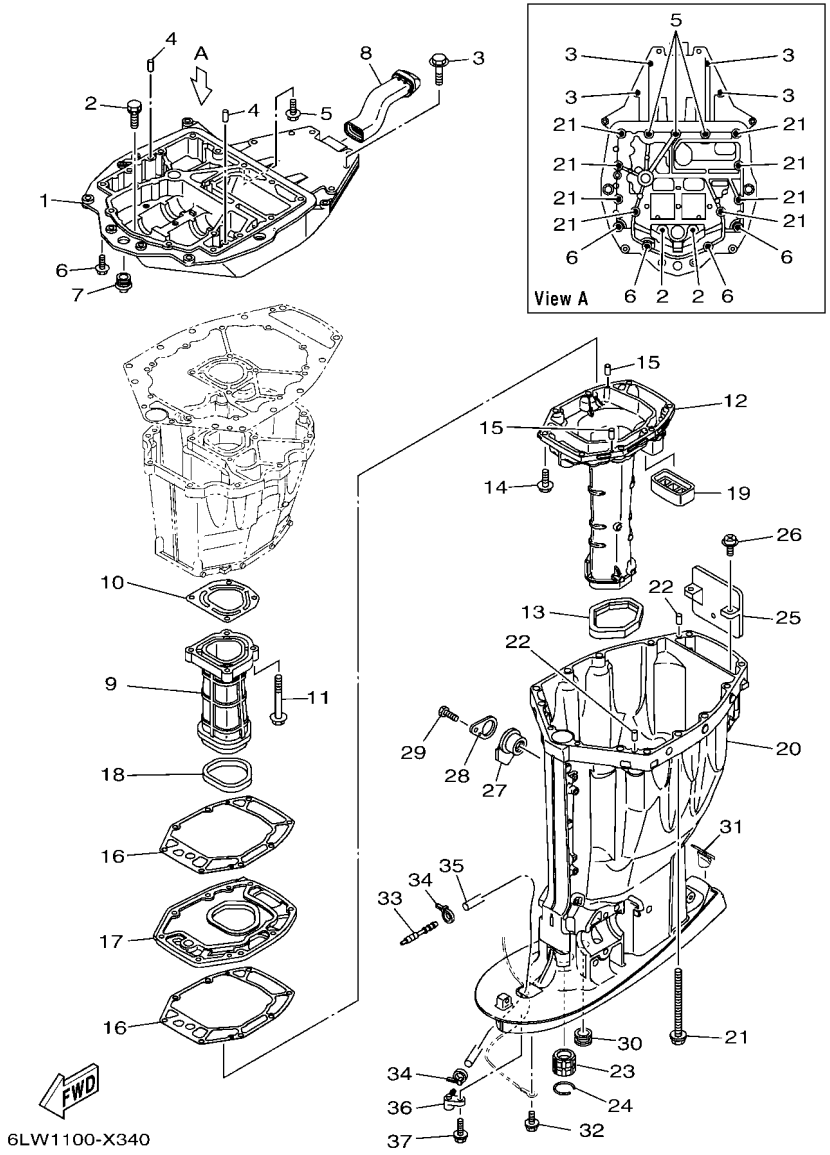

FIG. 34 UPPER CASING — FOURREAU

REF. NO.	PART NO. N° PIECES	DESCRIPTION DESCRIPTION	6LY4					REMARKS REMARQUES
26	97980–06216	SCREW, WITH WASHER VIS, AVEC RONDELLE	2					
27	6BB–15316–01	DAMPER 1 AMORTISSEUR 1	1					X(25.2") X(25.2")
28	6BB–45152–01	COVER, UPPER CASING 2 CAPUCHON FOURREAU	1					X(25.2") X(25.2")
29	97D95–06012	BOLT, HEXAGON DEEP RECESS VIS HEXAGONAL	1					X(25.2") X(25.2")
30	6E5–44366–01	DAMPER, WATER SEAL 2 JOINT, TUBE D'EAU 2	1					
31	6DA–45155–01	CAP CAPUCHON	1					X(25.2") X(25.2")
	6C5–45155–02	CAP CAPUCHON	1					L(20.3") L(20.3")
32	95D95–06010	BOLT, FLANGE DEEP RECESS BOULON FIXATION	1					
33	6E5–83558–00	END, NIPPLE RACCORD DE NIPPLE	1					
34	90465–11M10	CLAMP BRIDE	2					
35	90445–07044	HOSE (L1800) DURITE (L1800)	1					X(25.2") X(25.2")
	90445–07045	HOSE (L1680) DURITE (L1680)	1					L(20.3") L(20.3")
36	63P–45379–00	NIPPLE, HOSE RACCORD D'ESSENCE	1					
37	90119–06287	BOLT, WITH WASHER BOULON, AVEC RONDELLE	1					

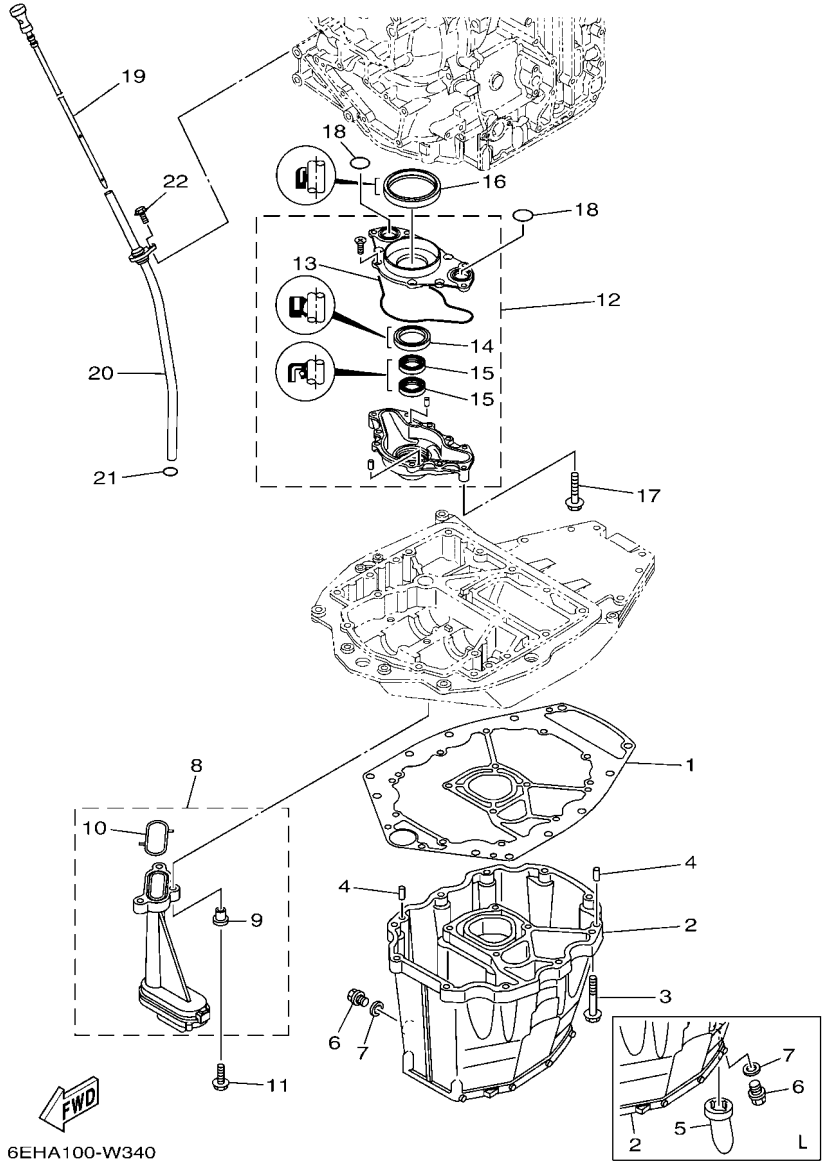

FIG. 35 OIL PAN — VENTILATEUR D'HUILE

REF. NO.	PART NO. N° PIECES	DESCRIPTION DESCRIPTION	6LY4					REMARKS REMARQUES
1	63P–15312–02	GASKET, OIL PAN JOINT DE VENTILATEUR D'HUILE	1					
2	6DA–15311–02–CA	OIL PAN VENTILATEUR D'HUILE	1					X(25.2") X(25.2")
	63P–15311–04–CA	OIL PAN VENTILATEUR D'HUILE	1					L(20.3") L(20.3")
3	97E75–08535	BOLT, HEXAGON W/W DEEP RECESS VIS HEXAGONAL AVC RONDELLE	10					
4	93608–16M16	PIN, DOWEL AXE	2					
5	63P–15316–01	DAMPER 1 AMORTISSEUR 1	1					L(20.3") L(20.3")
6	90340–14M06	PLUG, STRAIGHT SCREW PLOT, FILETE DROIT	1					
7	90430–14M09	GASKET JOINT	1					
8	63P–13411–00	STRAINER, OIL FILTRE, HUILE	1					
9	90387–06263	.COLLAR .COLLERETTE	3					
10	63P–13415–00	.SEAL, OIL STRAINER .JOINT, FILTRE A HUILE	1					
11	95812–06025	BOLT, FLANGE BOULON	3					
12	6DA–13300–00	OIL PUMP ASSY POMPE A HUILE COMPLETE	1					
13	6DA–13329–00	.GASKET, PUMP COVER .JOINT, COUVERCLE DE POMPE	1					
14	6AW–13119–00	.OIL SEAL .JOINT SPY	1					
15	69J–13631–00	.OIL SEAL .JOINT SPY	2					
16	6CB–11355–00	SEAL, CYLINDER 1 JOINT, SPY CYLINDRE	1					
17	97E75–06540	BOLT, HEXAGON W/W DEEP RECESS VIS HEXAGONAL AVC RONDELLE	4					
18	93210–25552	O-RING JOINT TORIQUE	2					
19	6DA–15362–00	PLUG, OIL LEVEL PLOT, NIVEAU D'HUILE	1					
20	6DA–15377–00	GUIDE, INLET GUIDE D'ADMISSION	1					
21	93210–19MJ3	O-RING JOINT TORIQUE	1					
22	95D95–06016	BOLT, FLANGE DEEP RECESS BOULON FIXATION	1					

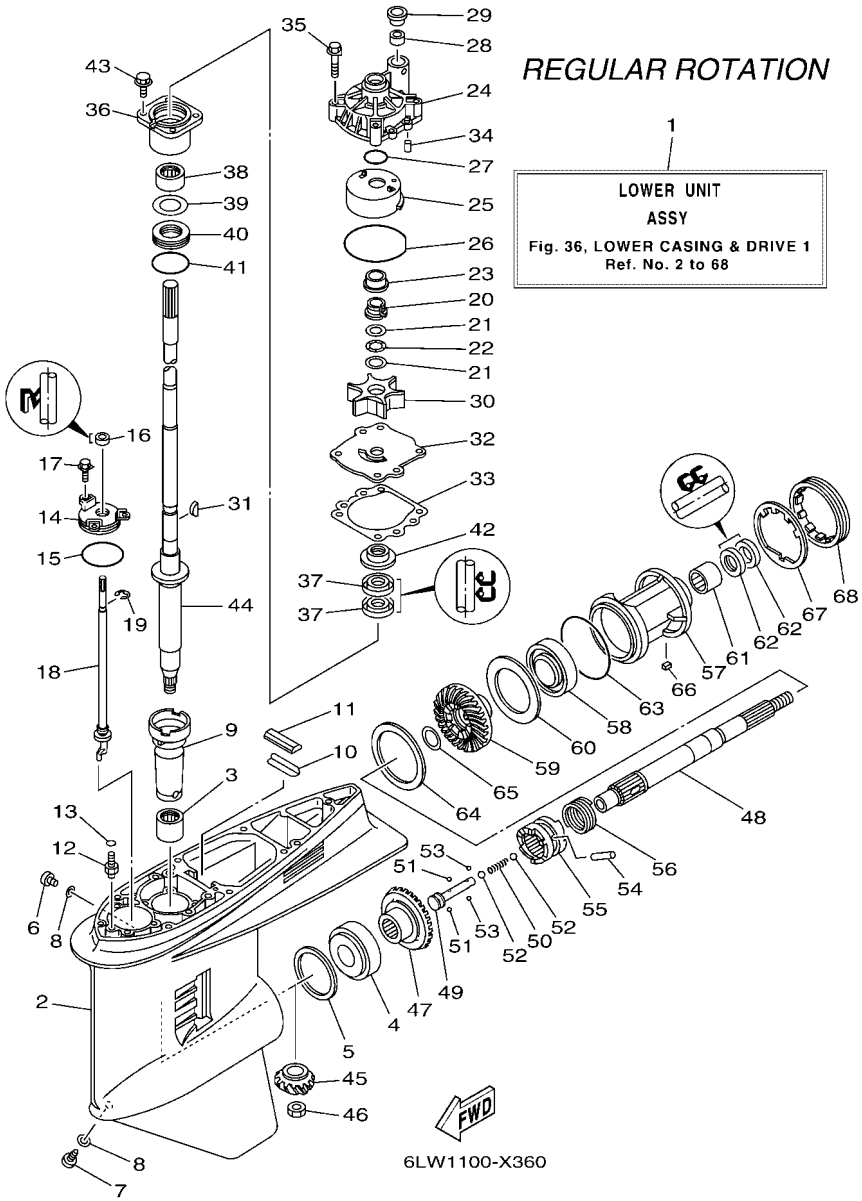

FIG. 36 LOWER CASING & DRIVE 1 — BOITIER D'HELICE TRANSMISSION1

REF. NO.	PART NO. N° PIECES	DESCRIPTION DESCRIPTION	6LY4					REMARKS REMARQUES
1	6DA–45300–14–8D	LOWER UNIT ASSY UNITE INFERIEURE (ENS.)	1					X(25.2"),RH X(25.2"),RH
	6DA–45300–03–8D	LOWER UNIT ASSY UNITE INFERIEURE (ENS.)	1					L(20.3"),RH L(20.3"),RH
2	6J9–45301–07–8D	CASING, LOWER BEQUILLE	1					
3	93311–928U5	BEARING ROULEMENT	1					
4	93332–000V3	BEARING ROULEMENT	1					
5	6G5–45567–01	SHIM (T:0.10MM) CALE (T:0.10MM)	1					UR UR
	6G5–45567–10	SHIM (T:0.12MM) CALE (T:0.12MM)	1					UR UR
	6G5–45567–20	SHIM (T:0.15MM) CALE (T:0.15MM)	1					UR UR
	6G5–45567–30	SHIM (T:0.18MM) CALE (T:0.18MM)	1					UR UR
	6G5–45567–40	SHIM (T:0.30MM) CALE (T:0.30MM)	1					UR UR
	6G5–45567–50	SHIM (T:0.40MM) CALE (T:0.40MM)	1					UR UR
	6G5–45567–60	SHIM (T:0.50MM) CALE (T:0.50MM)	1					UR UR
6	90340–08002	PLUG, STRAIGHT SCREW PLOT, FILETE DROIT	1					
7	688–45341–10	PLUG, DRAIN BOUCHON DE VIDANGE	1					
8	90430–08003	GASKET JOINT	2					
9	6G5–45536–01	SLEEVE, DRIVE SHAFT MANCHON, ARBRE MOTEUR	1					
10	663–45376–00	GUIDE, SEAL DAMPER BUTEE, JOINT CAOUTCHOUC	1					
11	688–45375–00	DAMPER, SEAL BOURRELET, CAOUTCHOUC	1					
12	63P–45378–00	NIPPLE, HOSE RACCORD, TUYAU	1					
13	93210–07003	O-RING JOINT TORIQUE	1					
14	6E5–45321–00	PLATE PLAQUETTE	1					
15	93210–58144	O-RING JOINT TORIQUE	1					
16	93106–09014	OIL SEAL JOINT SPY	1					
17	90119–06286	BOLT, WITH WASHER BOULON, AVEC RONDELLE	3					
18	63P–44150–01	SHIFT CAM ASSY CAME D'INVERSION	1					
19	99001–08600	CIRCLIP CIRCLIP	1					
20	61A–45538–00	SPACER 1 ENTRETOISE	1					

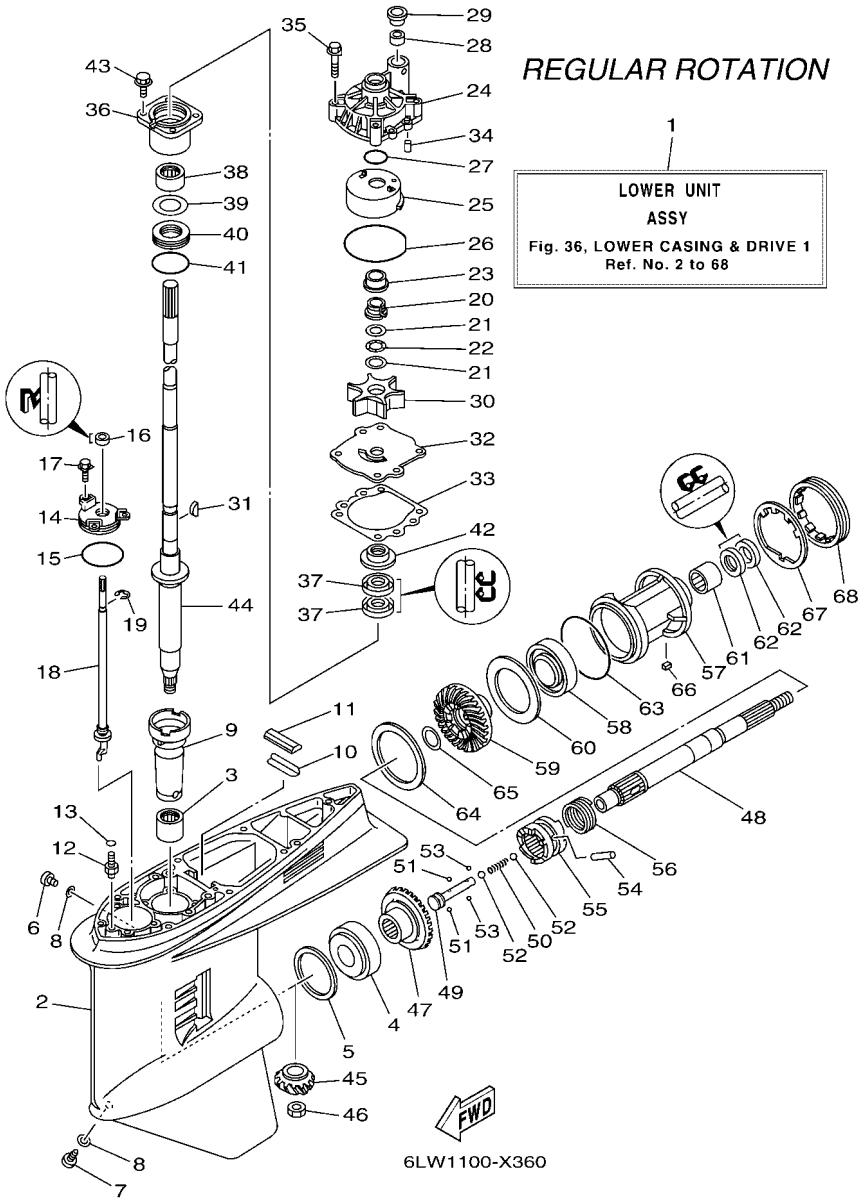

FIG. 36 LOWER CASING & DRIVE 1 — BOITIER D'HELICE TRANSMISSION1

REF. NO.	PART NO. N° PIECES	DESCRIPTION DESCRIPTION	6LY4					REMARKS REMARQUES
21	90201–22M01	WASHER, PLATE RONDELLE, PLATE	2					
22	90206–22M19	WASHER, WAVE RONDELLE, ONDULEE	1					
23	61A–45527–00	COLLAR, DRIVE SHAFT ENTRETOISE	1					
24	61A–44311–01	HOUSING, WATER PUMP CORPS, POMPE A EAU	1					
25	61A–44322–02	INSERT, CARTRIDGE CUVETTE	1					
26	93210–86M38	O-RING JOINT TORIQUE	1					
27	93210–37160	O-RING JOINT TORIQUE	1					
28	6E5–44365–01	DAMPER, WATER SEAL 1 JOINT, TUBE D'EAU 1	1					
29	6E5–44312–00	COVER, WATER PUMP HOUSING COUVERCLE	1					
30	6E5–44352–01	IMPELLER TURBINE	1					
31	90280–04M05	KEY, WOODRUFF CLAVETTE, DEMI-LUNE	1					
32	6G5–44323–01	OUTER PLATE, CARTRIDGE PLAQUE EXTERIEURE	1					
33	6E5–44315–A0	GASKET, WATER PUMP JOINT, POMPE A EAU	1					
34	93606–12019	PIN, DOWEL GOUPILLE	2					
35	90119–08191	BOLT, WITH WASHER BOULON, AVEC RONDELLE	4					
36	6E5–45331–00–9S	HOUSING, BEARING FLASQUE, ROULEMENT	1					
37	93101–28M16	OIL SEAL JOINT SPY	2					
38	93317–330U2	BEARING ROULEMENT	1					
39	6E5–45587–01	SHIM (T:0.10MM) CALE (T:0.10MM)	1					UR UR
	6E5–45587–10	SHIM (T:0.12MM) CALE (T:0.12MM)	1					UR UR
	6E5–45587–20	SHIM (T:0.15MM) CALE (T:0.15MM)	1					UR UR
	6E5–45587–30	SHIM (T:0.18MM) CALE (T:0.18MM)	1					UR UR
	6E5–45587–40	SHIM (T:0.30MM) CALE (T:0.30MM)	1					UR UR
	6E5–45587–50	SHIM (T:0.40MM) CALE (T:0.40MM)	1					UR UR
	6E5–45587–60	SHIM (T:0.50MM) CALE (T:0.50MM)	1					UR UR
40	93341–930V2	BEARING CERVEAUX DE DIRECTION	1					
41	93210–55M14	O-RING JOINT TORIQUE	1					

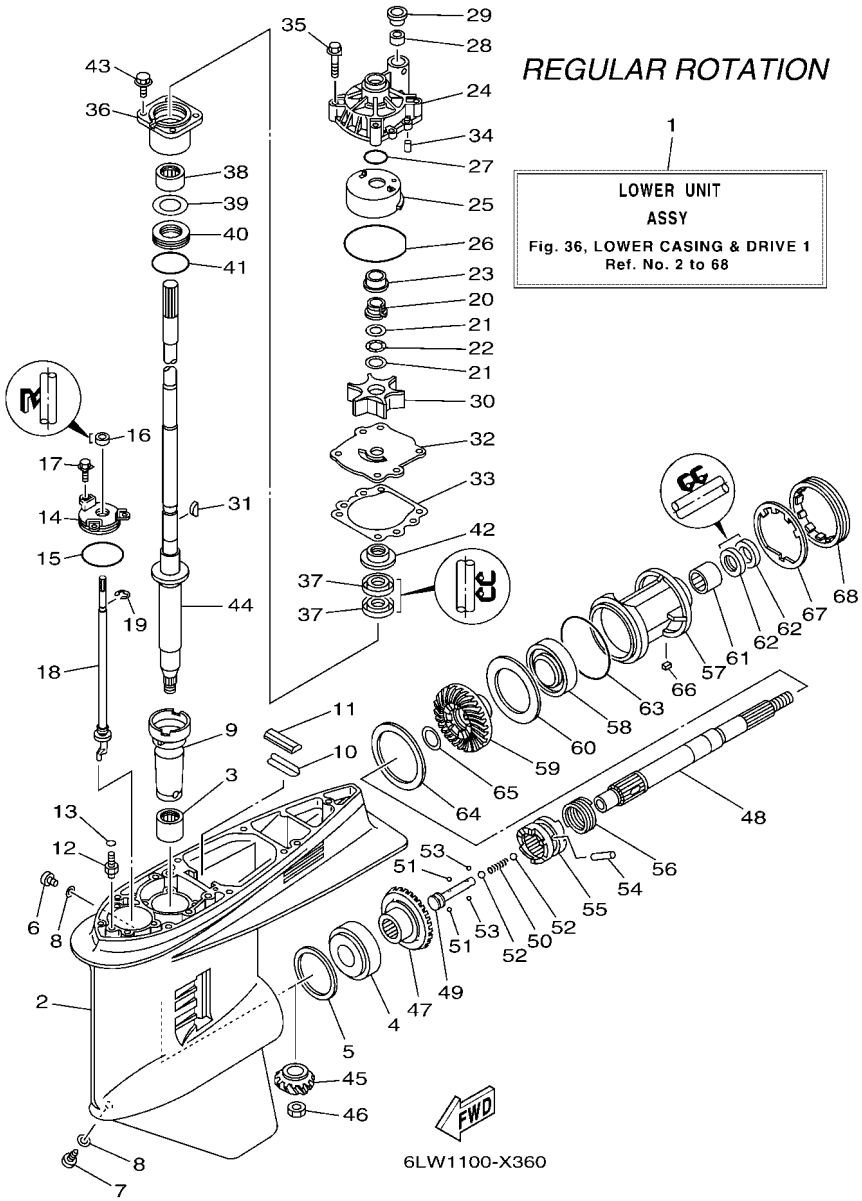

FIG. 36 LOWER CASING & DRIVE 1 — BOITIER D'HELICE TRANSMISSION1

REF. NO.	PART NO. N° PIECES	DESCRIPTION DESCRIPTION	6LY4					REMARKS REMARQUES
42	6E5–45344–00	COVER, OIL SEAL FLASQE, JOINT D'HUILE	1					
43	97E95–08525	BOLT, HEXAGON W/W DEEP RECESS VIS HEXAGONAL AVC RONDELLE	4					
44	6DA–45501–10	DRIVE SHAFT COMP. ARBRE MOTEUR COMP.	1					X(25.2") X(25.2")
	63P–45501–01	DRIVE SHAFT COMP. ARBRE MOTEUR COMP.	1					L(20.3") L(20.3")
45	6DA–45551–00	PINION (14T) PIGNON D'ATTAQUE (14D)	1					
46	90170–16M01	NUT ECROU	1					
47	6DA–45560–00	GEAR 1 (26T) PIGNON 1 (26T)	1					
48	6J9–45611–01	SHAFT, PROPELLER ARBRE, HELICE	1					
49	6E5–45634–02	SLIDE, SHIFT CONTRE-POUSSOIR	1					
50	90501–16M37	SPRING, COMPRESSION RESSORT, COMPRESSION	1					
51	93507–32009	BALL BILLE	2					
52	93511–32017	BALL BILLES	2					
53	93503–16003	BALL BILLES	2					
54	90250–08M07	PIN, STRAIGHT GOUPILLE, DROITE	1					
55	6DA–45631–01	CLUTCH, DOG CRABOT	1					
56	6E5–45633–01	RING, CROSS PIN JONC, GOUPILLE CRABOT	1					
57	6J9–45332–00–CA	HOUSING, BEARING FLASQUE, ROULEMENT	1					
58	93306–209U0	BEARING ROULEMENT	1					
59	6DA–45571–00	GEAR 2 (26T) PIGNON 2 (26T)	1					
60	6G5–45576–10	WASHER, THRUST 2 RONDELLE DE CALAGE 2	1					
61	93315–43061	BEARING ROULEMENT	1					
62	93101–30M17	OIL SEAL JOINT SPY	2					
63	93210–97M55	O-RING JOINT TORIQUE	1					
64	6G5–45577–02	SHIM (T:0.10MM) CALE (T:0.10MM)	1					UR UR
	6G5–45577–10	SHIM (T:0.12MM) CALE (T:0.12MM)	1					UR UR
	6G5–45577–20	SHIM (T:0.15MM) CALE (T:0.15MM)	1					UR UR
	6G5–45577–30	SHIM (T:0.18MM) CALE (T:0.18MM)	1					UR UR

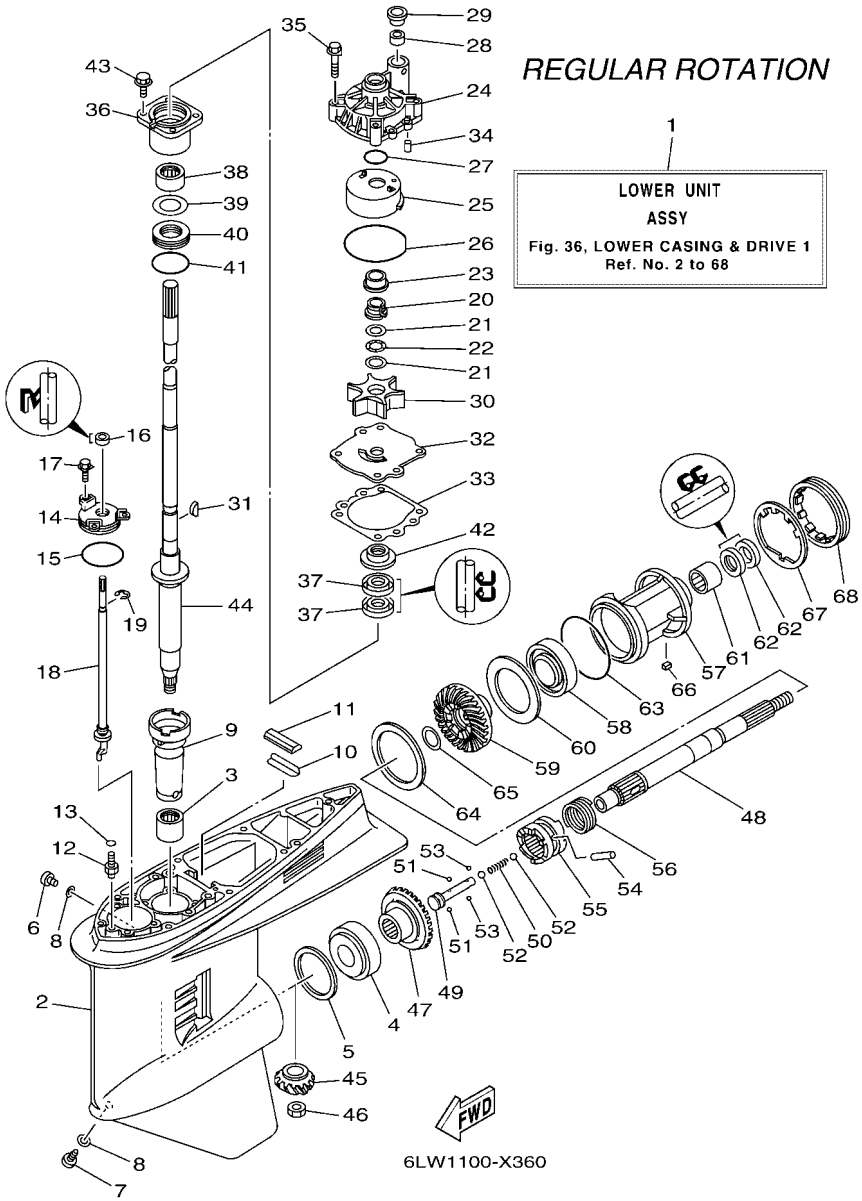

FIG. 36 LOWER CASING & DRIVE 1 — BOITIER D'HELICE TRANSMISSION1

REF. NO.	PART NO. N° PIECES	DESCRIPTION DESCRIPTION	6LY4					REMARKS REMARQUES
64	6G5–45577–40	SHIM (T:0.30MM) CALE (T:0.30MM)	1					UR UR
	6G5–45577–50	SHIM (T:0.40MM) CALE (T:0.40MM)	1					UR UR
	6G5–45577–60	SHIM (T:0.50MM) CALE (T:0.50MM)	1					UR UR
65	90201–30M92	WASHER, PLATE RONDELLE, PLATE	1					
66	90282–04M00	KEY, STRAIGHT CLAVETTE, DROITE	1					
67	6G5–45383–01	WASHER, CLAW FREIN D'ECROU	1					
68	6G5–45384–02	NUT ECROU	1					

FIG. 37 LOWER CASING & DRIVE 2 — BOITIER D HELICE TRANSMISSION2

REGULAR ROTATION

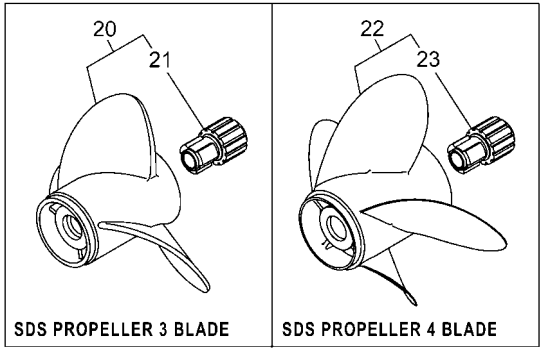

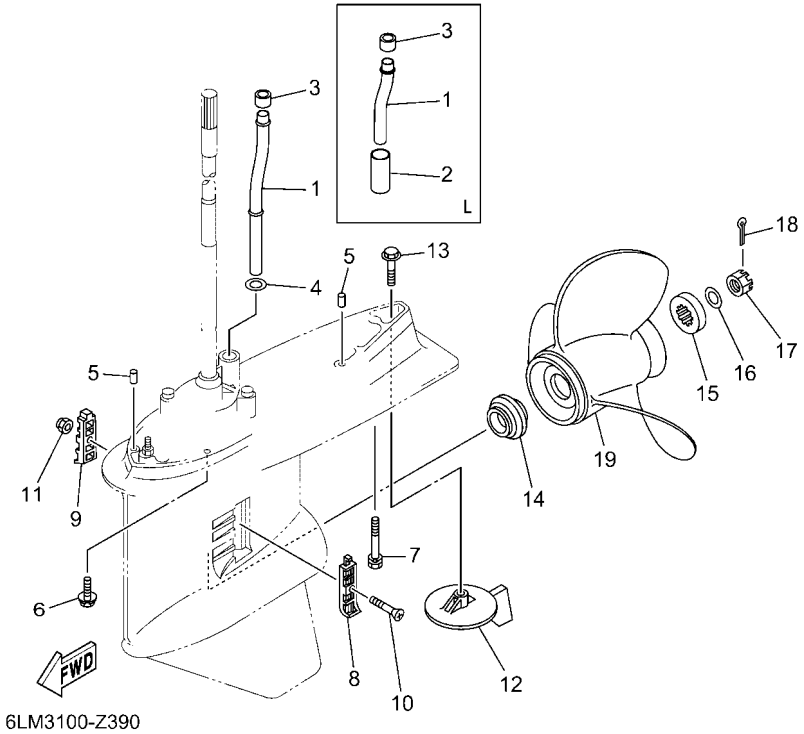

REF. NO.	PART NO. N° PIECES	DESCRIPTION DESCRIPTION	6LY4					REMARKS REMARQUES
1	6DA–44361–00	TUBE, WATER 1 TUBE D'EAU 1	1					X(25.2") X(25.2")
	6DA–44361–10	TUBE, WATER 1 TUBE D'EAU 1	1					L(20.3") L(20.3")
2	90445–23002	HOSE (L59) DURITE (L59)	1					L(20.3") L(20.3")
3	6E5–44365–01	DAMPER, WATER SEAL 1 JOINT, TUBE D'EAU 1	1					
4	90202–16061	WASHER, PLATE RONDELLE, PLATE	1					X(25.2") X(25.2")
5	93608–16M16	PIN, DOWEL AXE	2					
6	97E95–10645	BOLT, HEXAGON W/W DEEP RECESS VIS HEXAGONAL AVC RONDELLE	6					
7	90119–10072	BOLT, WITH WASHER BOULON, AVEC RONDELLE	1					
8	6J9–45214–00	COVER, WATER INLET 1 GRILLE, ENTREE D'EAU 1	1					
9	6J9–45215–00	COVER, WATER INLET 2 GRILLE, ENTREE D'EAU 2	1					
10	90152–05M08	SCREW, COUNTERSUNK VIS, TETE NOYEE	1					
11	90185–05002	NUT, NYLON ECROU,AUTO-BLOQUANT	1					
12	6J9–45371–01	TAB-TRIM ANODE DERIVE	1					
13	90105–10M00	BOLT, FLANGE BOULON, A COLLERETTE	1					
14	6E5–45987–01	SPACER 1 ENTRETOISE 1	1					
15	688–45997–01	SPACER 2 ENTRETOISE 2	1					
16	92990–18200	WASHER RONDELLE, PLATE	1					
17	90171–18M04	NUT, CASTLE ECROU, CRENELE	1					
18	91490–40030	PIN. COTTER GOUPILLE	1					
19	6G5–45941–00	PROPELLER (3X15-1/4"X15"-M) HELICE (3X15-1/4"X15"-M)	1					UR UR
	6G5–45952–00	PROPELLER (3X14-5/8"X16"-M) HELICE (3X14-5/8"X16"-M)	1					UR UR
	6G5–45947–01	PROPELLER (3X14-1/2"X17"-M) HELICE (3X14-1/2"X17"-M)	1					UR UR
	6G5–45945–01	PROPELLER (3X14"X19"-M) HELICE (3X14"X19"-M)	1					UR UR
	6G5–45943–01	PROPELLER (3X13-3/4"X21"-M) HELICE (3X13-3/4"X21"-M)	1					UR UR
	6G5–45949–00	PROPELLER (3X13-1/2"X23"-M) HELICE (3X13-1/2"X23"-M)	1					UR UR
	6G5–45978–03	PROPELLER (3X13-3/4"X17"-M2) HELICE (3X13-3/4"X17"-M2)	1					UR UR
	6G5–45974–03	PROPELLER (3X13-3/4"X19"-M2) HELICE (3X13-3/4"X19"-M2)	1					UR UR

FIG. 37 LOWER CASING & DRIVE 2 — BOITIER D HELICE TRANSMISSION2

REGULAR ROTATION

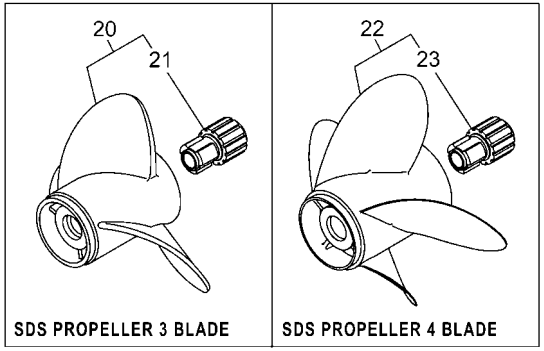

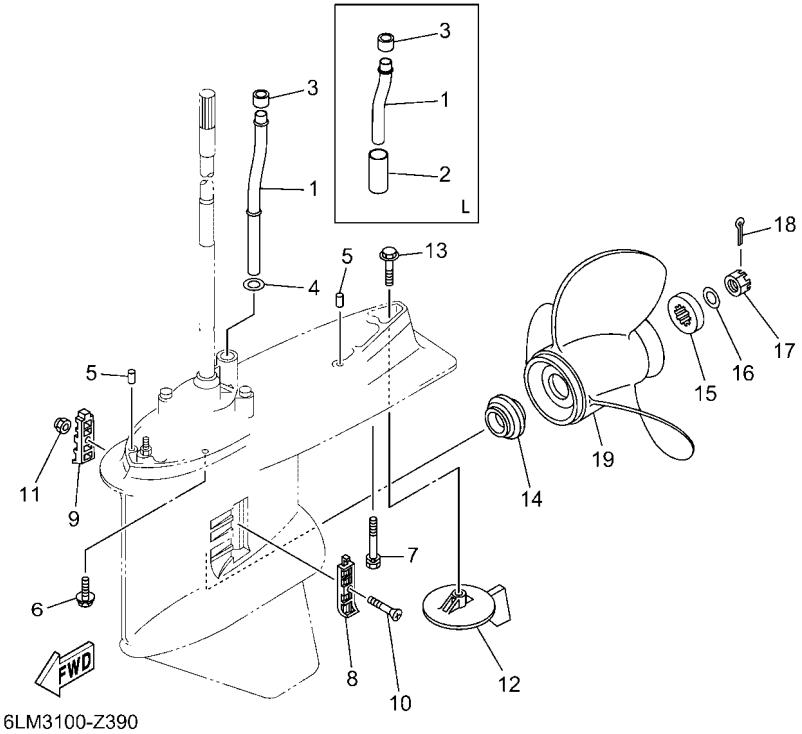

6LM3100-Z390

REF. NO.	PART NO. N° PIECES	DESCRIPTION DESCRIPTION	6LY4					REMARKS REMARQUES
19	6G5–45972–02	PROPELLER (3X13-3/4"X21"-M) HELICE (3X13-3/4"X21"-M)	1					UR UR
	6G5–45976–01	PROPELLER (3X13-3/8"X23"-M) HELICE (3X13-3/8"X23"-M)	1					UR UR
	6G5–45930–00	PROPELLER (3X13-3/8"X25"-M) HELICE (3X13-3/8"X25"-M)	1					UR UR
20	68F–45932–20	PROPELLER (3X14-1/2"X13"-M) HELICE (3X14-1/2"X13"-M)	1					UR SDS 3 BLADE UR SDS 3 BLADE
	68F–45930–20	PROPELLER (3X14-1/2"X14"-M) HELICE (3X14-1/2"X14"-M)	1					UR SDS 3 BLADE UR SDS 3 BLADE
	68F–45970–20	PROPELLER (3X14-1/2"X15"-M) HELICE (3X14-1/2"X15"-M)	1					UR SDS 3 BLADE UR SDS 3 BLADE
	68F–45972–20	PROPELLER (3X14-1/4"X17"-M) HELICE (3X14-1/4"X17"-M)	1					UR SDS 3 BLADE UR SDS 3 BLADE
	68F–45978–20	PROPELLER (3X14-1/4"X18"-M) HELICE (3X14-1/4"X18"-M)	1					UR SDS 3 BLADE UR SDS 3 BLADE
	68F–45974–20	PROPELLER (3X13-3/4"X19"-M) HELICE (3X13-3/4"X19"-M)	1					UR SDS 3 BLADE UR SDS 3 BLADE
	68F–45976–20	PROPELLER (3X13-3/4"X21"-M) HELICE (3X13-3/4"X21"-M)	1					UR SDS 3 BLADE UR SDS 3 BLADE
	60H–45970–00	PROPELLER (3X14-1/4"X14"-M) HELICE (3X14-1/4"X14"-M)	1					UR SDS 3 BLADE UR SDS 3 BLADE
	60H–45972–00	PROPELLER (3X14-1/4"X16"-M) HELICE (3X14-1/4"X16"-M)	1					UR SDS 3 BLADE UR SDS 3 BLADE
	60H–45974–00	PROPELLER (3X14-1/4"X18"-M) HELICE (3X14-1/4"X18"-M)	1					UR SDS 3 BLADE UR SDS 3 BLADE
	60H–45976–00	PROPELLER (3X14-1/4"X20"-M) HELICE (3X14-1/4"X20"-M)	1					UR SDS 3 BLADE UR SDS 3 BLADE
	60H–45978–00	PROPELLER (3X14-1/4"X22"-M) HELICE (3X14-1/4"X22"-M)	1					UR SDS 3 BLADE UR SDS 3 BLADE
	6CE–45934–20	PROPELLER (3X15-1/4"X18"-T) HELICE (3X15-1/4"X18"-T)	1					UR SDS 3 BLADE UR SDS 3 BLADE
	6CE–45970–20	PROPELLER (3X15-1/4"X19"-T) HELICE (3X15-1/4"X19"-T)	1					UR SDS 3 BLADE UR SDS 3 BLADE
	6CE–45932–20	PROPELLER (3X15"X20"-T) HELICE (3X15"X20"-T)	1					UR SDS 3 BLADE UR SDS 3 BLADE
	6CE–45972–20	PROPELLER (3X15"X21"-T) HELICE (3X15"X21"-T)	1					UR SDS 3 BLADE UR SDS 3 BLADE
	6CE–45936–20	PROPELLER (3X14-3/4"X22"-T) HELICE (3X14-3/4"X22"-T)	1					UR SDS 3 BLADE UR SDS 3 BLADE
	6CE–45974–20	PROPELLER (3X14-3/4"X23"-T) HELICE (3X14-3/4"X23"-T)	1					UR SDS 3 BLADE UR SDS 3 BLADE
	6CE–45D72–20	PROPELLER (3X14-3/4"X24"-T) HELICE (3X14-3/4"X24"-T)	1					UR SDS 3 BLADE UR SDS 3 BLADE
	6CE–45D74–20	PROPELLER (3X14-3/4"X25"-T) HELICE (3X14-3/4"X25"-T)	1					UR SDS 3 BLADE UR SDS 3 BLADE
21	6CE–45C81–10	.DAMPER RUBBER, PROPELLER 1 .AMORTISSEUR HELICE 1	1					
22	6CE–45B70–20	PROPELLER (4X15"X21"-T) HELICE (4X15"X21"-T)	1					UR SDS 4 BLADE UR SDS 4 BLADE
	6CE–45B72–20	PROPELLER (4X15"X22"-T) HELICE (4X15"X22"-T)	1					UR SDS 4 BLADE UR SDS 4 BLADE
	6CE–45B74–20	PROPELLER (4X15"X23"-T) HELICE (4X15"X23"-T)	1					UR SDS 4 BLADE UR SDS 4 BLADE

FIG. 37 LOWER CASING & DRIVE 2 — BOITIER D HELICE TRANSMISSION2

REGULAR ROTATION

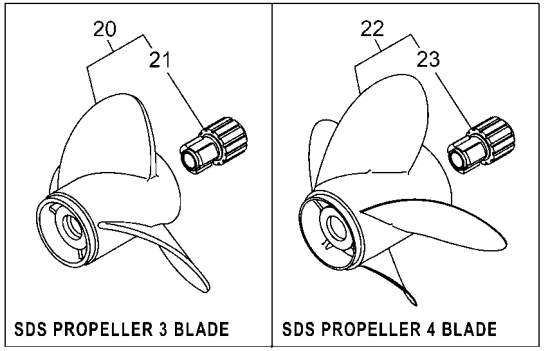

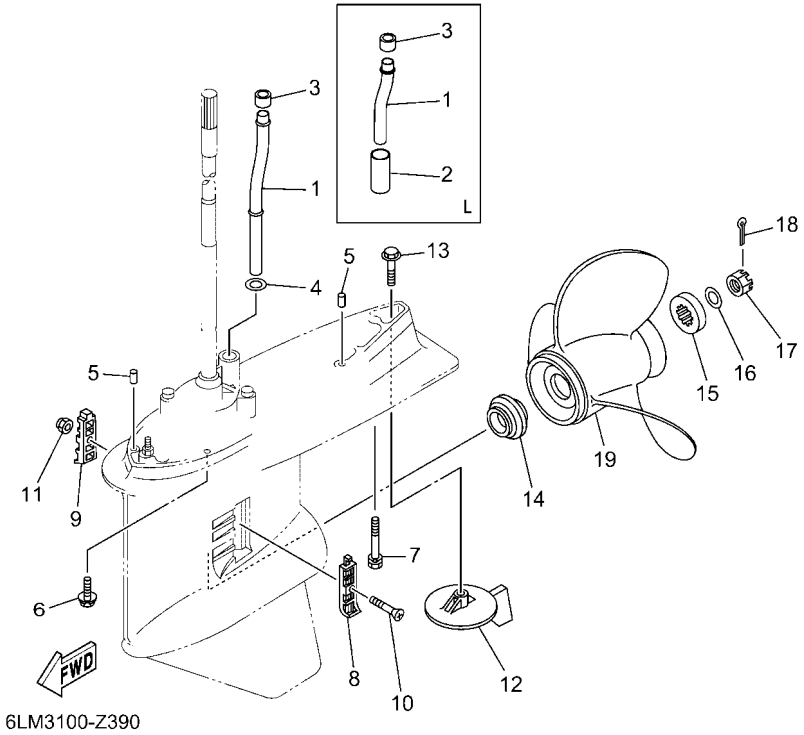

REF. NO.	PART NO. N° PIECES	DESCRIPTION DESCRIPTION	6LY4					REMARKS REMARQUES
23	6CE–45C81–10	.DAMPER RUBBER, PROPELLER 1 .AMORTISSEUR HELICE 1	1					

FIG. 38 REMOTE CONTROL BOX — BOITIER DE COMMANDE A DISTANCE

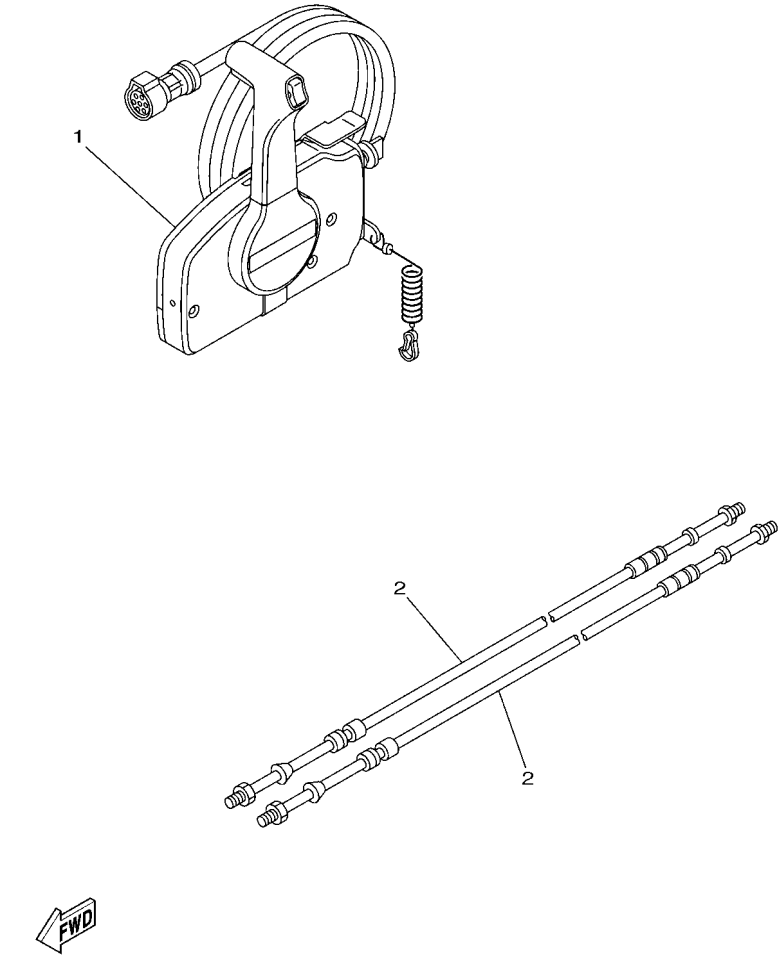

REF. NO.	PART NO. N° PIECES	DESCRIPTION DESCRIPTION	6LY4					REMARKS REMARQUES
1	703–48207–25	REMOTE CONTROL ASSY (10P, PTT) BOITIER DE COMMANDE A DISTANCE	1					AP FOR RUS WITH PT/T SW. AP FOR RUS WITH PT/T SW.
2	701–48320–50	CABLE, REMOTE CONTROL L=15F CABLE, COMMANDE A DISTANCE:15F	2					UR UR
	701–48320–60	CABLE, REMOTE CONTROL L=16F CABLE, COMMANDE A DISTANCE:16F	2					UR UR
	701–48320–80	CABLE, REMOTE CONTROL L=17F CABLE, COMMANDE A DISTANCE:17F	2					UR UR
	701–48350–00	CABLE, REMOTE CONTROL L=21F CABLE, COMMANDE A DISTANCE:21F	2					UR UR
	701–48350–20	CABLE, REMOTE CONTROL L=23F CABLE, COMMANDE A DISTANCE:23F	2					UR UR

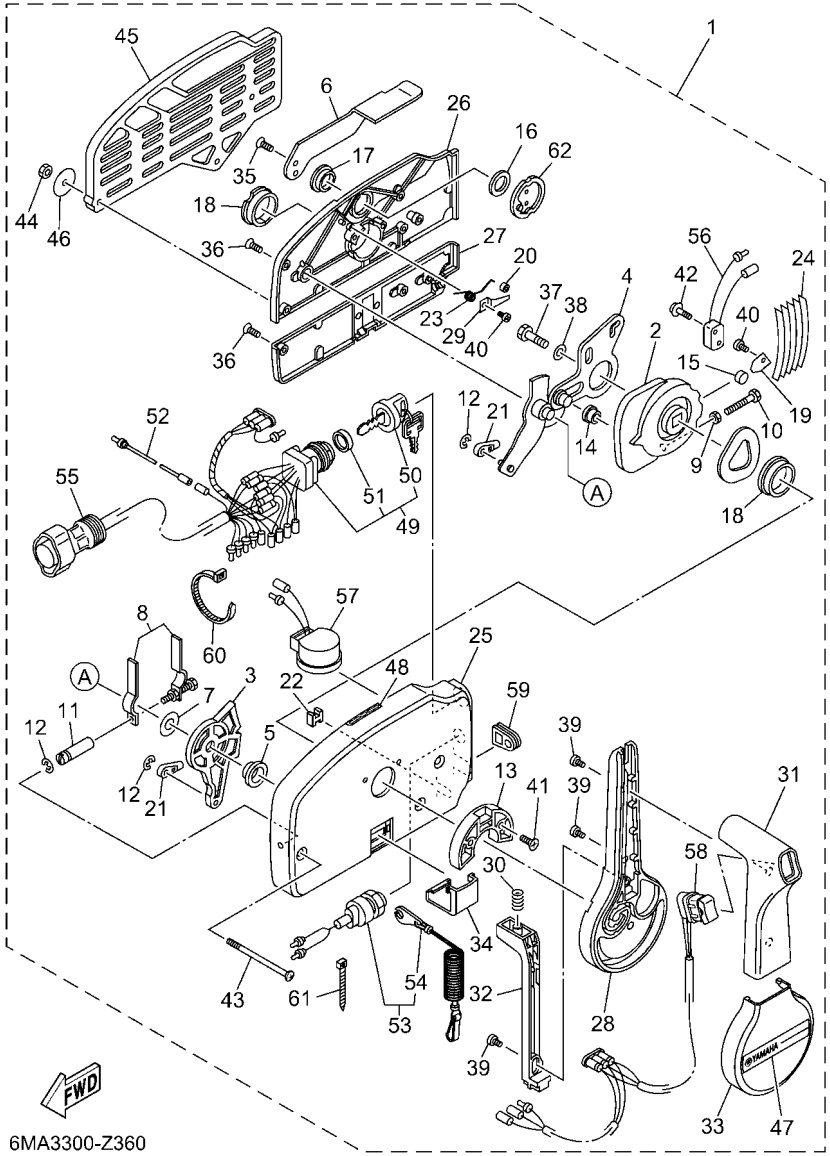

FIG. 39 REMOTE CONTROL ASSY — BOITIER DE COMMANDE A DISTANCE

REF. NO.	PART NO. N° PIECES	DESCRIPTION DESCRIPTION	6LY4					REMARKS REMARQUES
1	703–48207–25	REMOTE CONTROL ASSY (10P, PTT) BOITIER DE COMMANDE A DISTANCE	1					AP FOR RUS WITH PT/T SW. AP FOR RUS WITH PT/T SW.
2	703–48232–00	.GEAR .PIGNON	1					
3	703–48271–00	.ARM, SHIFT .BRAS	1					
4	703–48261–01	.ARM, THROTTLE .BRAS, ACCELERATION	1					
5	703–48235–00	.BUSHING .COUSSINET	1					
6	703–48152–10	.KNOB, FREE ACCEL. .BOUTON	1					
7	703–48268–00	.SPACER .ENTRETOISE	1					
8	703–48264–00	.FRICTION, THROTTLE .FRICTION, ACCELERATION	1					
9	95380–05600	.NUT .ECROU	1					
10	97380–05025	.BOLT .BOULON, HEXAGONAL	1					
11	703–48265–10	.SHAFT, FRICTION .AXE, COPILOTE	1					
12	93430–06024	.CIRCLIP .CLIPS	3					
13	703–48245–00	.PLATE, LOCK .PLAQUE, VERROU	1					
14	703–48252–00	.ROLLER, CAM .POULIE	1					
15	701–48248–00	.ROLLER, FREE ACCEL. .POULIE	1					
16	703–48198–00	.WASHER, WAVE .RONDELLE, ELASTIQUE ONDULEE	1					
17	703–48243–00	.BUSHING .COUSSINET	1					
18	703–48236–00	.BUSHING 1 .POULIE	2					
19	703–48189–00	.RETAINER .FLASQUE	1					
20	703–48234–00	.ROLLER, DETENT .POULIE	1					
21	703–48345–01	.CABLE END, REMOTE CONTROL 2 .CHAPE CABLE	2					
22	703–48358–01	.ANCHOR, CABLE .COLLIER	1					
23	703–48244–00	.SPRING, FREE ACCEL. .RESSORT	1					
24	703–48238–00	.SPRING, DETENT .RESSORT	5					
25	703–48211–10	.HOUSING,1 .CORPS	1					
26	703–48212–10	.BACK PLATE 1 .PLAQUETTE 1	1					
27	703–48213–10	.BACK PLATE 2 .PLAQUETTE 2	1					

FIG. 39 REMOTE CONTROL ASSY — BOITIER DE COMMANDE A DISTANCE

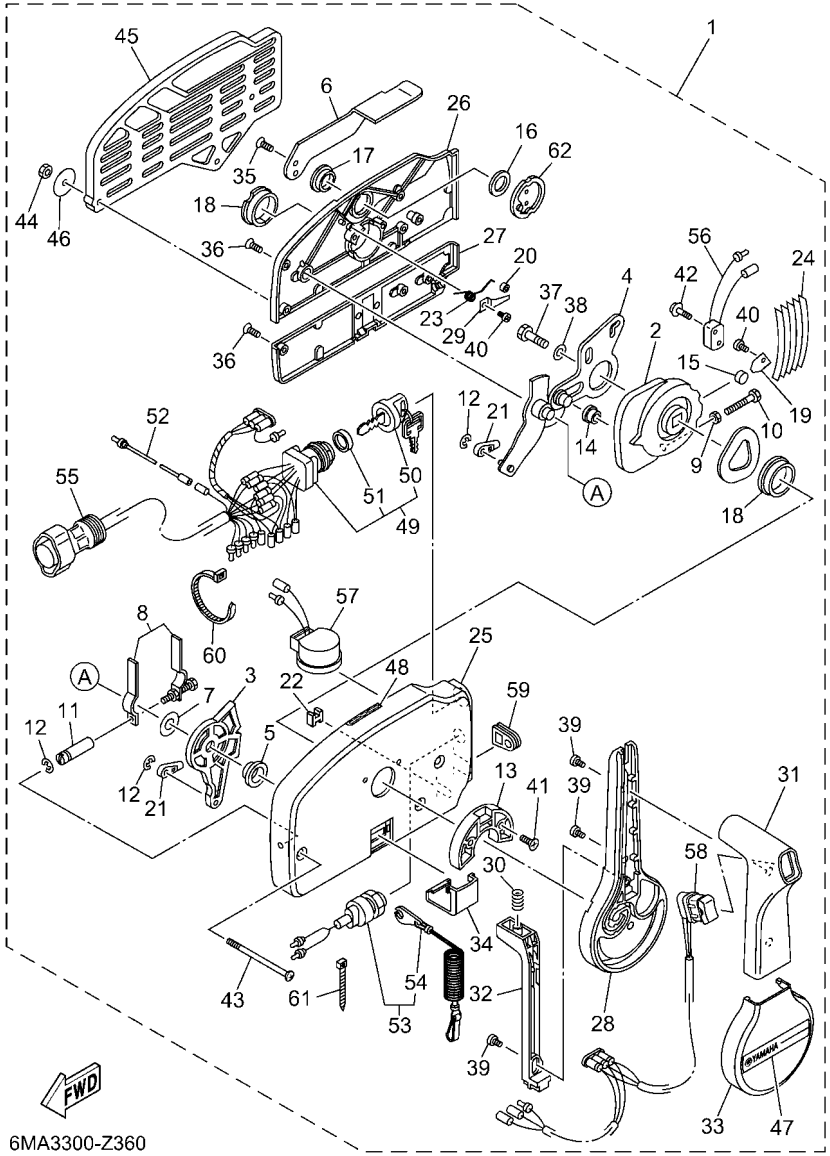

REF. NO.	PART NO. N° PIECES	DESCRIPTION DESCRIPTION	6LY4					REMARKS REMARQUES
28	703–48221–10	.LEVER, CONTROL .LEVIER, COMMANDE	1					
29	703–48246–00	.SPACER .ENTRETOISE	1					
30	703–48227–00	.SPRING, NEUTRAL LOCK .RESSORT	1					
31	703–48222–20	.GRIP, CONTROL LEVER .POIGNEE, COMMANDE LEVIER	1					SINGLE SINGLE
32	703–48223–10	.LOCK, NEUTRAL .VERROU, NEUTRAL	1					
33	703–48225–10	.COVER .COUVERCLE	1					
34	703–48219–10	.COVER, LEAD .COUVERCLE	1					
35	703–48281–00	.SCREW .VIS	2					
36	703–44189–20	.SCREW .VIS	5					
37	97380–08030	.BOLT .BOULON, HEXAGONAL	1					
38	92990–08600	.WASHER, PLATE .RONDELLE, PLATE	1					
39	703–48128–10	.SCREW 2 .VIS 2	3					
40	98580–04006	.SCREW, PAN HEAD .VIS	2					
41	703–44189–40	.SCREW .VIS	2					
42	703–48129–00	.SCREW 3 .VIS 3	2					
43	703–44189–30	.SCREW .VIS	3					
44	95380–06600	.NUT, HEXAGON .ECROU	3					
45	703–48293–11	.SPACER, REMOTE CONTROL .ENTRETOISE	1					SINGLE SINGLE
46	701–48287–00	.WASHER .RONDELLE	3					
47	703–48215–11	.GRAPHIC .ADHESIF	1					
48	6X3–44191–00	.INDICATOR, SHIFT .ETIQUETTE, EMBRAYAGE	1					
49	703–82510–45	.MAIN SWITCH ASSY .CONTACTEUR A CLEF COMPLET	1					
50	703–82577–00	..CAP, KEY ..CABOCHON	1					
51	6K1–82532–00	..CAP ..COUVERCLE	1					
52	703–82531–00	.WIRE, LEAD (L70) .FIL (L70)	1					
53	688–82575–02	.ENGINE STOP SWITCH ASSY .COUPE CIRCUIT CPLT	1					
54	682–82556–00	..LANYARD, STOP SWITCH ..CORDON DU COUPE CIRCUIT	1					

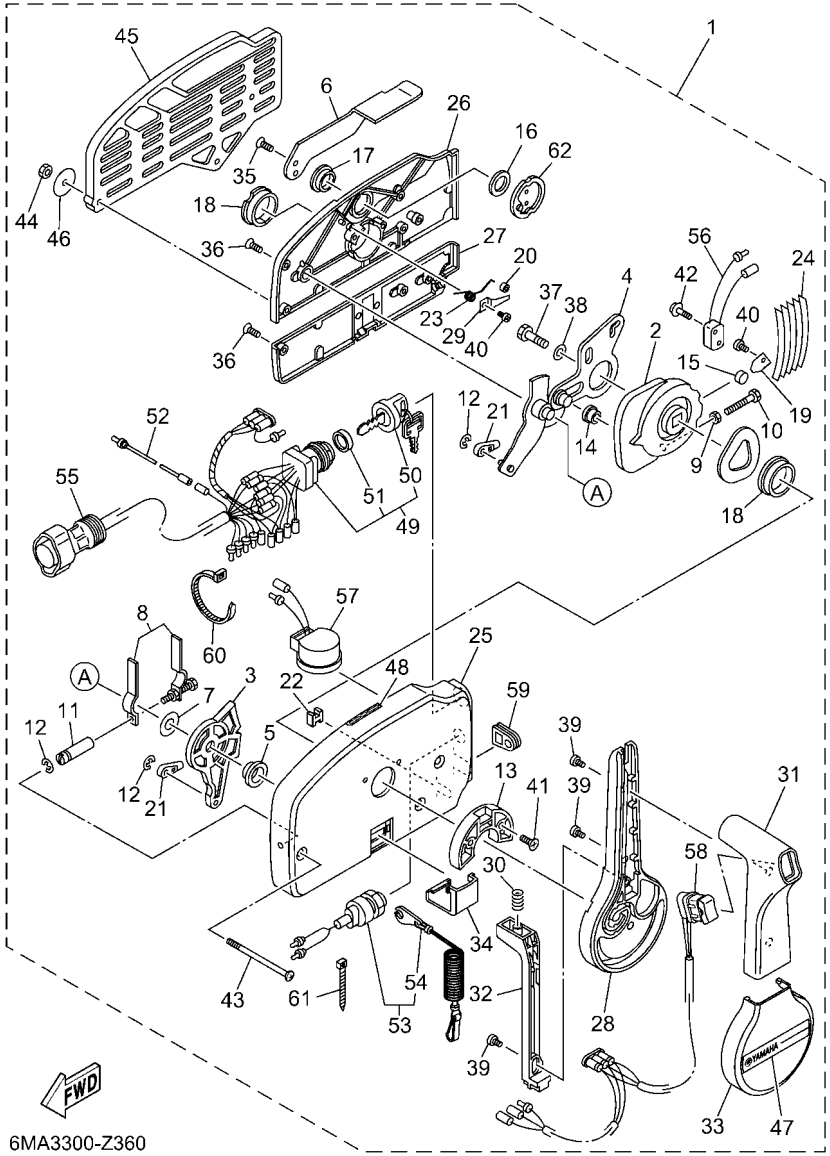

FIG. 39 REMOTE CONTROL ASSY — BOITIER DE COMMANDE A DISTANCE

REF. NO.	PART NO. N° PIECES	DESCRIPTION DESCRIPTION	6LY4					REMARKS REMARQUES
55	688–8258A–20	.EXTENSION, WIRE HARNESS (4.9M) .EXTENSION, FAISCEAU DE FILS (4	1					(10P) (10P)
56	703–82540–00	.NEUTRAL SWITCH ASSY .CONTACTEUR DE POINT-MORT	1					
57	703–83383–11	.BUZZER .RONFLEUR	1					
58	703–82563–21	.TRIM & TILT SWITCH ASSY .INCLINER ET PARER COMMUTATEUR	1					
59	703–48284–10	.GROMMET .PASSE-FIL	1					
60	703–82591–00	.BAND .COLLIER	1					
61	703–82592–00	.BAND .COLLIER	1					
62	703–48153–00	.SHAFT, FREE ACCEL. .AXE	1					

FIG. 40 OPTIONAL PARTS 1 — PIECES OPTIONNELLES 1

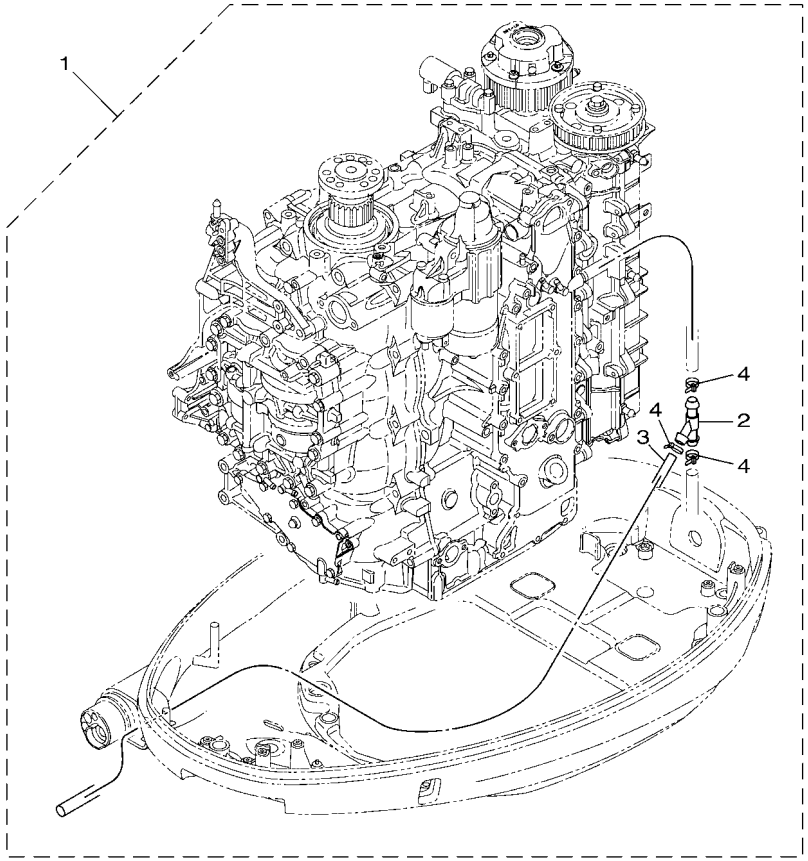

6LW1100-X380

REF. NO.	PART NO. N° PIECES	DESCRIPTION DESCRIPTION	6LY4					REMARKS REMARQUES
1	*	FLUSHING HOSE KIT KIT DE TUYAU DE RINCAGE	1					LM LM
2	6DA–13758–00	.PIPE, JOINT .DURITE	1					
3	6DA–14987–00	.HOSE .DURITE	1					
4	90465–11M10	.CLAMP .BRIDE	3					

FIG. 41 OPTIONAL PARTS 2 — PIECES OPTIONNELLES 2

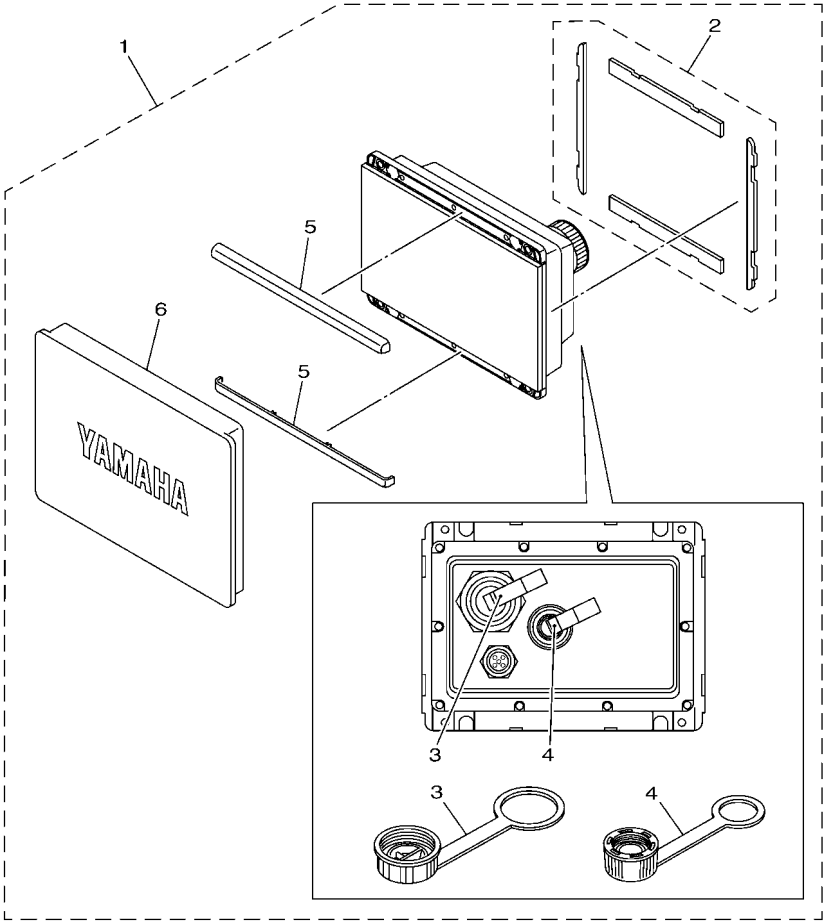

6ALH300-V410

REF. NO.	PART NO. N° PIECES	DESCRIPTION DESCRIPTION	6LY4					REMARKS REMARQUES
1	6YM–83710–1B	CL5 DISPLAY (W/O WIFI) CL5 AFFICHAGE (W/O WIFI)	1					FOR RUS WITHOUT Wi-Fi FOR RUS WITHOUT Wi-Fi
2	6YM–22480–00	.SEAL ASSY .JEU DE JOINT	1					
3	6YM–83956–00	.CAP 1 .COUVERCLE	1					
4	6YD–83957–00	.CAP 2 .COUVERCLE	1					
5	6YM–83512–00	.RIM .JANTE	2					
6	6YM–87278–00	.COVER, METER .COUVERCLE, COMPTEUR	1					

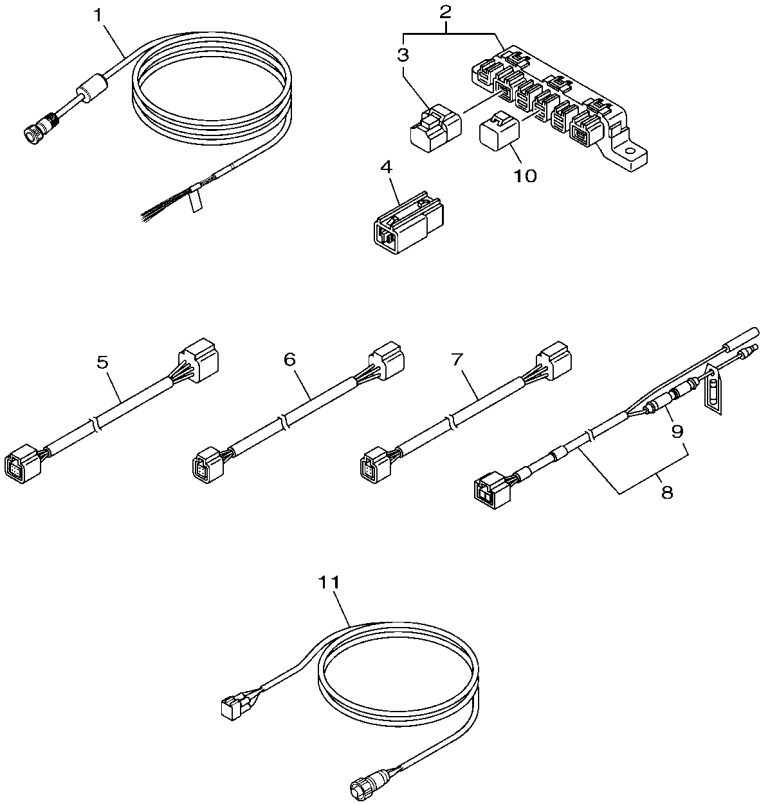

6ALH300-V420

FIG. 42 OPTIONAL PARTS 3 — PIECES OPTIONNELLES 3

REF. NO.	PART NO. N° PIECES	DESCRIPTION DESCRIPTION	6LY4					REMARKS REMARQUES
1	6YD–8356N–00	WIRE, LEAD FIL	1					FOR RUS FOR RUS
2	6Y8–81920–01	MULTI HUB ASSY BORNE	1					FOR RUS FOR RUS
3	6Y8–85371–01	.END OF LINE RESISTOR .RESISTANCE DE FIN DE LIGNE	1					
4	6Y8–81920–11	IN-LINE HUB ASSY BORNE	1					FOR RUS FOR RUS
5	6Y8–82553–31	25FT MAIN BUS EXTENSION, FAISCEAU	1					FOR RUS FOR RUS
6	6Y8–82521–11	2FT PIGTAIL BUS FAISCEAU (L: 2FT.)	1					FOR RUS FOR RUS
7	6Y8–82521–51	12FT PIGTAIL BUS FAISCEAU (L: 12FT.)	1					FOR RUS FOR RUS
8	6Y8–83553–02	8FT POWER WIRE FIL	1					FOR RUS FOR RUS
9	6G1–82151–01	.FUSE (10A) .FUSIBLE (10A)	1					
10	6Y8–82582–11	CAP 1 (4PIN) COUVERCLE 1 (4P)	2					FOR RUS FOR RUS
11	6YM–83553–01	CONVERSION HARNESS FIL	1					FOR RUS FOR RUS

FIG. 43 OPTIONAL PARTS 4 — PIECES OPTIONNELLES 4

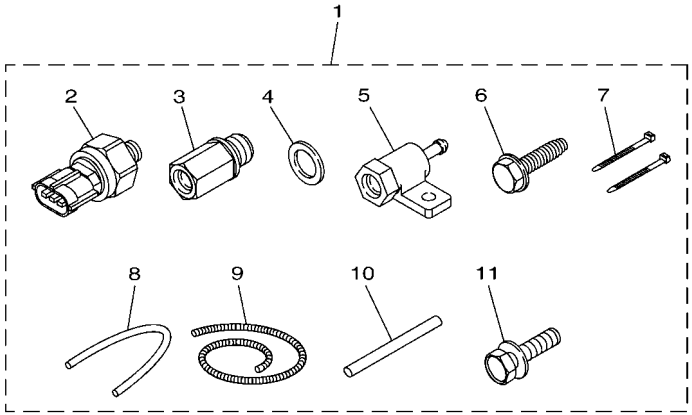

6CL6370-P440

REF. NO.	PART NO. N° PIECES	DESCRIPTION DESCRIPTION	6LY4					REMARKS REMARQUES
1	63P–8A4L2–07	SENSOR, MODULE 2 SENSOR (ENS.) 2	1					FOR RUS FOR RUS
2	6AW–8366B–10	.SENSOR, WATER PRESSURE .SONDE DE PRESSION D'EAU	2					
3	63P–8366C–00	.ADAPTOR, INPUT .CONNECTEUR 2	1					
4	90430–14115	.GASKET .JOINT	1					
5	60V–8366D–00	.ADAPTOR, INPUT .CONNECTEUR 3	1					
6	90109–06M81	.BOLT .BOULON	1					
7	90465–11M10	.CLAMP .BRIDE	2					
8	90445–07017	.HOSE (L: 550MM) .DURITE (L: 550MM)	1					
9	90447–07013	.HOSE, COVER (L: 700MM) .DURITE, COUVERCLE (L: 700MM)	1					
10	60V–42629–01	.SEAL .JOINT	1					
11	97E95–06516	.BOLT, HEXAGON W/W DEEP RECESS .VIS HEXAGONAL AVC RONDELLE	1					

FIG. 44 REPAIR KIT 1 — KITS DE REPARATION 1

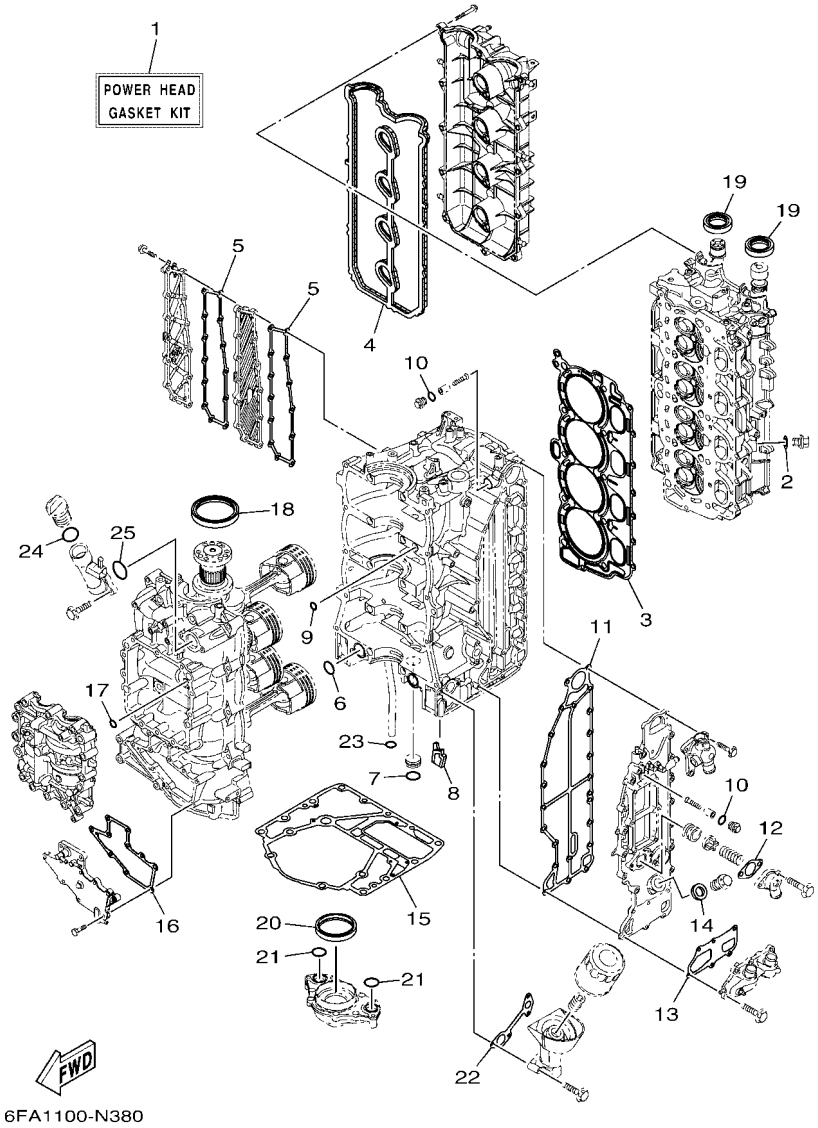

REF. NO.	PART NO. N° PIECES	DESCRIPTION DESCRIPTION	6LY4					REMARKS REMARQUES
1	6FA–W0001–02	POWER HEAD GASKET KIT POCHETTE DE JINTS TETE MOTRICE	1					
2	90430–14115	.GASKET .JOINT	1					
3	6DA–11181–00	.GASKET, CYLINDER HEAD 1 .JOINT, DE CULASSE 1	1					
4	6DA–11193–00	.GASKET, HEAD COVER 1 .JOINT, COUVERCLE DE CULASSE 1	1					
5	6DA–15353–01	.GASKET, DRAIN .JOINT, PLOT DE VIDANGE	2					
6	93210–25552	.O-RING .JOINT TORIQUE	2					
7	93210–25647	.O-RING .JOINT TORIQUE	1					
8	6DA–14664–01	.GROMMET, WATER SHUT .PASSE-FIL	1					
9	93210–12648	.O-RING .JOINT TORIQUE	1					
10	93210–13M63	.O-RING .JOINT TORIQUE	2					
11	6DA–41114–01	.GASKET, EXHAUST OUTER COVER .JOINT, COUVERCLE D'ECHAPPEMENT	1					
12	60V–11382–A0	.GASKET 2 .JOINT 2	1					
13	6DA–11381–01	.GASKET 1 .JOINT 1	1					
14	90201–186F1	.WASHER, PLATE .RONDELLE, PLATE	1					
15	63P–11351–04	.GASKET, CYLINDER .JOINT, D'EMBASE	1					
16	6DA–15451–01	.GASKET, CRANKCASE COVER 1 .JOINT, COUVERCLE DE CARTER 1	1					
17	93210–08001	.O-RING .JOINT TORIQUE	1					
18	93102–85008	.OIL SEAL .JOINT SPY	1					
19	93102–38008	.OIL SEAL .JOINT SPY	2					
20	6CB–11355–00	.SEAL, CYLINDER 1 .JOINT, SPY CYLINDRE	1					
21	93210–25552	.O-RING .JOINT TORIQUE	2					
22	6DA–13475–00	.GASKET .JOINT	1					
23	93210–19MJ3	.O-RING .JOINT TORIQUE	1					
24	93210–24M79	.O-RING .JOINT TORIQUE	1					
25	93210–357A3	.O-RING .JOINT TORIQUE	1					

FIG. 45 REPAIR KIT 2 — KITS DE REPARATION 2

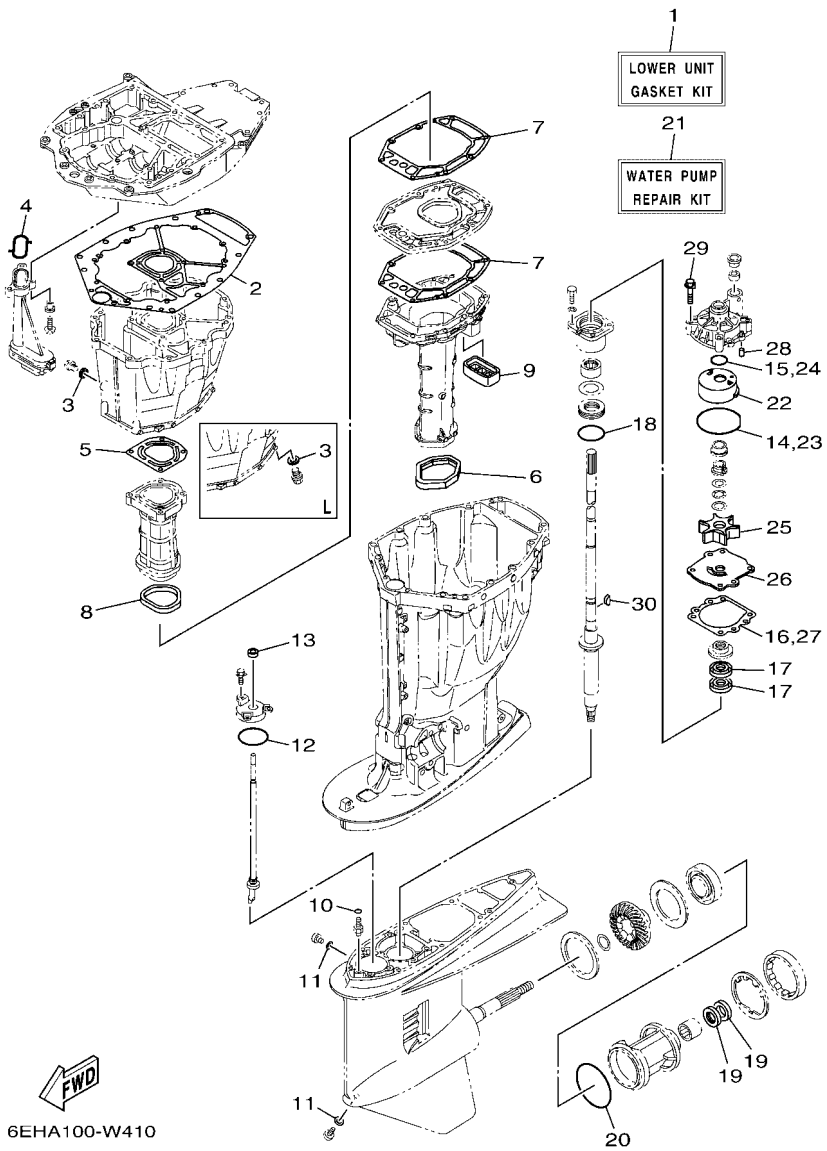

REF. NO.	PART NO. N° PIECES	DESCRIPTION DESCRIPTION	6LY4					REMARKS REMARQUES
1	63P–W0001–22	LOWER UNIT GASKET KIT POCHETTE DE JOINTS EMBASE	1					
2	63P–15312–02	.GASKET, OIL PAN .JOINT DE VENTILATEUR D'HUILE	1					
3	90430–14M09	.GASKET .JOINT	1					
4	63P–13415–00	.SEAL, OIL STRAINER .JOINT, FILTRE A HUILE	1					
5	63P–41133–A0	.GASKET, EXHAUST MANIFOLD 1 .JOINT, PIPE D'ECHAPPEMENT	1					
6	69J–45123–00	.GASKET, MUFFLER .JOINT, POT DE DETENTE	1					
7	63P–41134–A1	.GASKET, EXHAUST MANIFOLD 2 .JOINT, PIPE D'ECHAPPEMENT 2	2					
8	63P–41138–00	.SEAL, EXT. 1 .JOINT DE GROUPE 1	1					
9	69J–45127–01	.SEAL .JOINT	1					
10	93210–07003	.O-RING .JOINT TORIQUE	2					
11	90430–08003	.GASKET .JOINT	2					
12	93210–58144	.O-RING .JOINT TORIQUE	1					
13	93106–09014	.OIL SEAL .JOINT SPY	1					
14	93210–86M38	.O-RING .JOINT TORIQUE	1					
15	93210–37160	.O-RING .JOINT TORIQUE	1					
16	6E5–44315–A0	.GASKET, WATER PUMP .JOINT, POMPE A EAU	1					
17	93101–28M16	.OIL SEAL .JOINT SPY	2					
18	93210–55M14	.O-RING .JOINT TORIQUE	1					
19	93101–30M17	.OIL SEAL .JOINT SPY	2					
20	93210–97M55	.O-RING .JOINT TORIQUE	1					
21	61A–W0078–A4	WATER PUMP REPAIR KIT KIT DE REPARATION DE LA POMPE	1					
22	61A–44322–02	.INSERT, CARTRIDGE .CUVETTE	1					
23	93210–86M38	.O-RING .JOINT TORIQUE	1					
24	93210–37160	.O-RING .JOINT TORIQUE	1					
25	6E5–44352–01	.IMPELLER .TURBINE	1					
26	6G5–44323–01	.OUTER PLATE, CARTRIDGE .PLAQUE EXTERIEURE	1					
27	6E5–44315–A0	.GASKET, WATER PUMP .JOINT, POMPE A EAU	1					

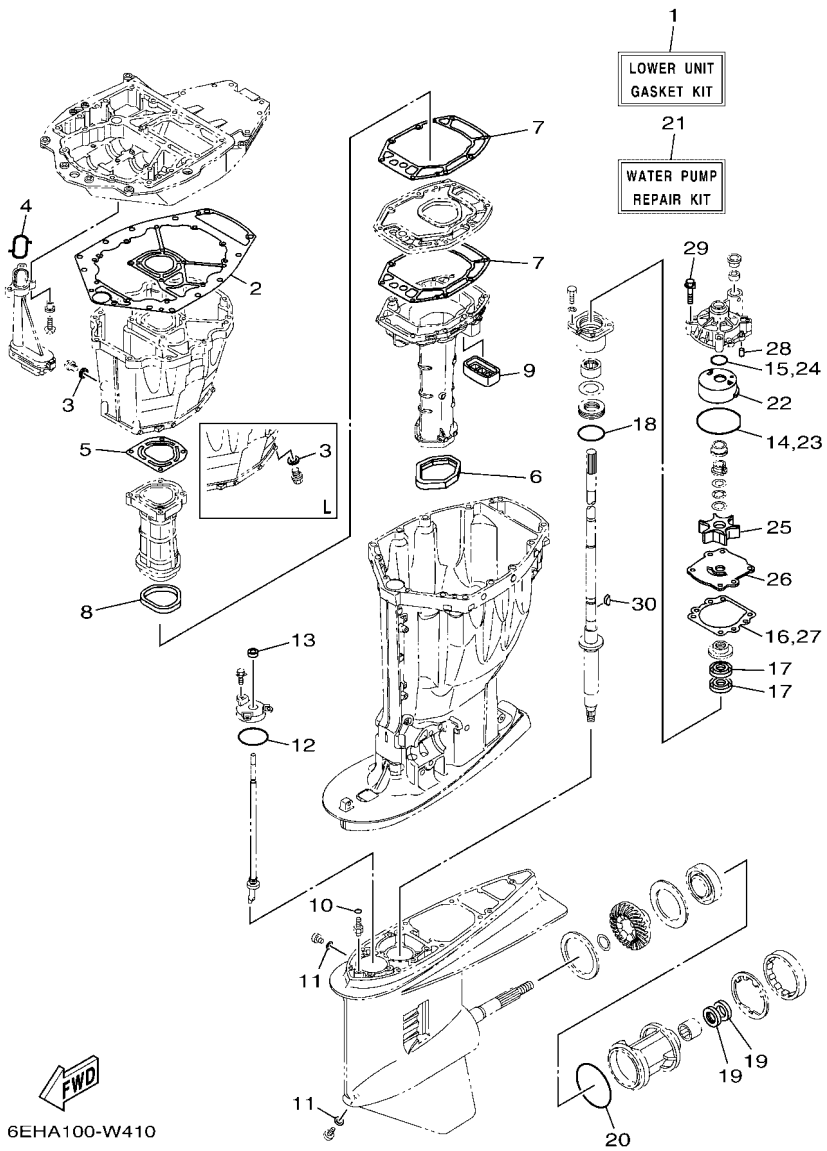

FIG. 45 REPAIR KIT 2 — KITS DE REPARATION 2

REF. NO.	PART NO. N° PIECES	DESCRIPTION DESCRIPTION	6LY4					REMARKS REMARQUES
28	93606–12019	.PIN, DOWEL .GOUPILLE	2					
29	90119–08191	.BOLT, WITH WASHER .BOULON, AVEC RONDELLE	4					
30	90280–04M05	.KEY, WOODRUFF .CLAVETTE, DEMI-LUNE	1					

NUMERICAL INDEX
INDEX NUMERIQUE

PART NO. N° PIECES	REF. NO.
6FA–11110–02–9S	5 – 2
6DA–11133–10	5 – 3
6DA–11181–00	5 – 17
	44 – 3
6DA–11191–00	5 – 22
6DA–11193–00	5 – 23
	44 – 4
6G8–11197–B0	6 – 1
6ML–11301–00	5 – 11
69J–11301–02	6 – 15
68T–11325–00	1 – 3
	6 – 2
6E5–11325–00	1 – 2
	1 – 6
	3 – 8
	3 – 29
6ML–11325–00	1 – 1
	1 – 4
	5 – 12
	6 – 16
67F–11328–01	5 – 13
	6 – 17
63P–11351–04	3 – 19
	44 – 15
6CB–11355–00	35 – 16
	44 – 20
6G5–11372–00	6 – 11
6DA–11381–01	6 – 22
	44 – 13
60V–11382–A0	6 – 13
	44 – 12
6DA–11410–00	4 – 1
6DA–11416–00	4 – 5
6DA–11416–10	4 – 5
6DA–11416–20	4 – 5
6DA–11417–00	4 – 6
6DA–11417–10	4 – 6
6DA–11417–20	4 – 6
6DA–11426–00	4 – 7
6DA–11427–00	4 – 8
6CB–11478–00	4 – 2
6DA–11500–01	3 – 20
63P–11512–00	3 – 23
6FA–11567–00	8 – 15
6DA–11590–00	8 – 18
6DA–11595–00	8 – 21
6FA–115A0–00	8 – 13
6CB–11603–00	4 – 12

PART NO. N° PIECES	REF. NO.
6DA–11631–21–94	4 – 11
6CB–11633–00	4 – 13
63P–11654–10	4 – 10
6JD–11656–00	4 – 15
6JD–11656–10	4 – 15
6JD–11656–20	4 – 15
6DA–11998–00	25 – 22
6DA–11999–00	25 – 24
6CB–12111–00	8 – 1
6CB–12113–00	8 – 4
51Y–12119–00	8 – 7
6DA–12121–00	8 – 2
6FA–12171–01	8 – 9
6DA–12181–02	8 – 11
6DA–12411–01	1 – 5
	6 – 25
6AW–12412–00	6 – 26
6DA–12413–B0–9S	6 – 27
60H–12416–00	6 – 8
6DA–1241B–B0–9S	6 – 47
6DA–1243A–00	6 – 12
6DA–1243E–00	6 – 28
6DA–1244H–00	6 – 30
6DA–12491–00	6 – 34
6DA–12527–00–9S	6 – 21
6DA–12552–00	7 – 13
6AW–12572–00	25 – 4
6DA–12576–00	7 – 1
	11 – 6
6DA–12578–00	7 – 6
6DA–12579–00	7 – 11
6R3–12581–10	25 – 5
6AW–12582–00	25 – 6
6R3–12583–10	25 – 7
6DA–12589–00	7 – 2
	7 – 15
6S5–12858–00	6 – 38
6CB–13016–00	1 – 10
	12 – 5
6AW–13119–00	35 – 14
6LH–13132–00	12 – 25
6DA–13152–00	9 – 3
6DA–13160–02	10 – 6
6DA–13161–02	10 – 7
6DA–13300–00	35 – 12
6DA–13329–00	35 – 13
63P–13411–00	35 – 8
63P–13415–00	35 – 10

PART NO. N° PIECES	REF. NO.
63P–13415–00	45 – 4
63P–13437–63	16 – 27
69J–13440–05	1 – 8
	6 – 37
6DA–13446–01	6 – 39
6DA–13475–00	6 – 40
	44 – 22
63P–13490–00	3 – 31
6DA–13532–00	11 – 1
6DA–13545–00	11 – 18
68V–13546–10	11 – 20
6FA–13547–00	11 – 24
6FA–13548–00	11 – 21
6DA–13564–01	10 – 4
6AW–13577–10	10 – 10
6CB–13593–00	12 – 21
	26 – 37
69J–13631–00	35 – 15
6DA–13641–00	9 – 11
6DA–13645–00	9 – 13
6DA–13646–00	9 – 12
63P–13716–00	12 – 20
69J–13716–00	26 – 36
6LH–13716–00	12 – 36
6DA–13751–02	9 – 1
6DA–13758–00	40 – 2
6DA–13761–01	10 – 8
6LH–13781–00	12 – 29
6LH–13784–00	12 – 32
6DA–13881–00	9 – 19
6DA–13892–00	12 – 11
6DA–13893–00	12 – 12
6CB–13906–01	12 – 8
6LH–13915–00	1 – 11
	12 – 24
6LH–13938–00	12 – 37
6AW–1410B–00	10 – 9
6C5–14127–10	12 – 23
6FM–14137–00	12 – 39
6DA–14146–00	12 – 10
6P2–14149–00	12 – 35
6LH–14180–00	12 – 1
6LH–14181–00	12 – 14
6DA–14182–00	12 – 2
6P2–14191–00	12 – 15
6CB–14216–00	12 – 6
6P2–14386–00	12 – 31
6P2–1441J–01	9 – 7

PART NO. N° PIECES	REF. NO.
6DA–14440–00	9 – 5
6LH–1447B–00	12 – 28
6CB–14546–00	12 – 27
6CB–14564–00	12 – 9
63P–14567–00	12 – 19
6K8–14591–10	12 – 17
69J–14624–01	34 – 25
6DA–14664–01	3 – 15
	44 – 8
6DA–14711–01	34 – 12
6DA–14711–11	34 – 12
6DA–1475A–00	11 – 11
6DA–1475F–00	11 – 13
6DA–1475G–00	11 – 16
6CB–14984–00	1 – 12
	12 – 30
6CB–14985–00	12 – 26
6DA–14987–00	40 – 3
6CB–14989–00	11 – 15
6DA–15109–01–9S	3 – 2
6DA–15311–02–CA	35 – 2
63P–15311–04–CA	35 – 2
63P–15312–02	35 – 1
	45 – 2
63P–15316–01	35 – 5
6BB–15316–01	34 – 27
6DA–15319–00	6 – 44
6DA–15353–01	3 – 7
	44 – 5
6DA–15362–00	35 – 19
6G8–15363–00	6 – 42
6DA–15373–00	9 – 9
6DA–15377–00	35 – 20
6DA–15411–00–9S	3 – 24
6DA–15414–00–9S	3 – 4
6DA–15423–00–9S	3 – 6
6DA–15451–01	3 – 25
	44 – 16
6DA–2134X–00	10 – 30
6LH–2153A–00	2 – 24
6LH–2153B–00	2 – 25
63D–21744–00	11 – 23
6E5–21744–00	11 – 22
6LH–22253–00	29 – 18
6EK–22434–00	32 – 27
6LH–22447–00	29 – 20
6LH–22471–00	32 – 19
6YM–22480–00	41 – 2

PART NO. N° PIECES	REF. NO.
6LP–22954–00	29 – 19
6LH–2312B–00	29 – 17
6DA–2416A–00	11 – 14
6P2–24170–00	10 – 27
63P–2419A–01	10 – 28
6CB–24217–00	12 – 7
6Y2–24307–52	15 – 1
6DA–24310–01	13 – 2
6DA–24313–00	14 – 19
6DA–24313–10	14 – 19
6DA–24314–01	14 – 3
6DA–24314–10	14 – 3
6DA–24317–01	13 – 12
6DA–24317–10	13 – 12
6DA–24323–00	13 – 15
6DA–24323–10	13 – 15
6DA–24324–10	13 – 8
6E5–24351–51	14 – 4
	15 – 3
6Y2–24360–60	15 – 5
6YK–24360–73	15 – 6
6CE–24377–00	7 – 3
	11 – 7
6AW–24377–01	14 – 2
688–24378–00	11 – 19
6CE–24378–00	6 – 29
6E5–24378–00	13 – 11
69J–24379–00	12 – 13
6GR–24410–02	10 – 15
6DA–24425–00	10 – 13
6DA–24426–00	10 – 18
6EK–24452–00	12 – 16
4SV–24453–00	12 – 33
6CB–24460–00	12 – 4
6DA–24462–00	10 – 23
6P3–24469–00	14 – 11
6CB–24482–00	12 – 18
6DA–24491–00	10 – 17
6LH–24492–00	12 – 38
6DA–24492–01	10 – 16
6CB–24501–01	1 – 9
	12 – 3
6P3–24519–00	14 – 12
6P3–24560–04	14 – 8
6P3–24562–03	14 – 10
6P3–24563–02	1 – 13
	14 – 9
6P3–24564–00	1 – 14

PART NO. N° PIECES	REF. NO.
6P3–24564–00	14 – 13
6DA–24566–00	14 – 14
6DA–24596–01	14 – 6
6LH–28100–01	14 – 21
6CB–2812A–00	17 – 29
6LW–28199–73–D0	14 – 22
6LW–28199–73–E0	14 – 22
6LW–28199–73–F0	14 – 22
6LW–28199–73–G0	14 – 22
6LW–28199–73–H0	14 – 22
6LW–28199–73–S0	14 – 22
6LW–28199–83–K0	14 – 23
6LW–28199–83–L0	14 – 23
6LW–28199–83–M0	14 – 23
6LW–28199–83–N0	14 – 23
6LW–28199–83–P0	14 – 23
6LW–28199–83–R0	14 – 23
6DA–41113–00–9S	6 – 5
6DA–41114–01	6 – 6
	44 – 11
63P–41131–02	34 – 9
63P–41133–A0	34 – 10
	45 – 5
63P–41134–A1	34 – 16
	45 – 7
63P–41137–07–CA	34 – 1
63P–41138–00	34 – 18
	45 – 8
6BG–42384–00	25 – 2
6DA–42384–00	23 – 24
6LP–42510–00–8D	30 – 1
6LP–42510–10–8D	30 – 1
6LH–42541–00	25 – 8
6CB–42545–00	2 – 5
6LK–42610–01–8D	2 – 1
6LH–42613–00–8D	2 – 3
6LH–42615–00	23 – 5
6DA–42617–00	16 – 26
6LH–4261A–02–8D	2 – 2
6LH–42625–00–8D	2 – 6
60V–42629–01	43 – 10
6CB–42647–B0	2 – 12
6DA–42662–01	3 – 33
6CB–42662–02	25 – 26
6AW–42663–01	2 – 18
6LK–42678–00	2 – 23
6DA–42697–00	29 – 12
6LH–42697–00	2 – 21

NUMERICAL INDEX
INDEX NUMERIQUE

PART NO. N° PIECES	REF. NO.
6AH–42697–10	2 – 22
6LH–42710–00–8D	23 – 1
648–42715–00	26 – 28
63P–42716–01	23 – 6
6DA–42717–01	23 – 23
6LH–42723–00–8D	24 – 1
6BG–42724–01	25 – 1
6E5–42724–01	34 – 7
6DA–42725–03	23 – 2
676–42726–00	24 – 14
6H4–42726–01	25 – 27
6KA–42727–00	23 – 27
6LH–42740–00–8D	24 – 6
6LH–42740–10–8D	24 – 6
6BG–42743–00	25 – 13
6DA–42744–00	3 – 32
6BG–42748–01	16 – 16
6H4–42748–01	23 – 25
68F–42753–00	23 – 29
6CB–42761–00	23 – 3
6LW–42766–00	25 – 28
6LH–42769–00	34 – 8
6LH–42770–00–8D	24 – 7
6EE–42794–41	23 – 31
6EE–42794–51	23 – 32
6LH–42815–00–8D	23 – 7
6LH–42816–00–8D	23 – 8
6LH–42817–00–8D	23 – 9
6CB–42818–00	23 – 14
6CB–42819–00	23 – 15
6LH–43111–00–8D	27 – 1
6LH–43112–00–8D	27 – 5
6LH–43126–00	28 – 7
66T–43144–00	23 – 18
6G5–43144–00	27 – 12
6G5–43148–00	27 – 17
6LH–43181–00	27 – 14
6LH–43185–00	27 – 15
6LH–43311–00–8D	27 – 9
6LH–43311–10–8D	27 – 9
6LH–43318–00–8D	29 – 27
6LH–43333–00	27 – 7
6LH–43333–10	27 – 8
6LH–43341–00	29 – 2
6LH–43342–00	29 – 4
6LP–43381–00–8D	29 – 7
6LP–43382–00–8D	29 – 8
6LH–43627–00	29 – 23

PART NO. N° PIECES	REF. NO.
6LP–43676–00–8D	31 – 1
6LH–43800–02	32 – 1
6LH–43801–00	32 – 3
6EK–43804–20	33 – 3
6LH–43805–10	33 – 2
6EK–4380F–00	33 – 6
6C5–4380G–00	32 – 33
6LH–4380K–02	32 – 29
6LH–4380P–00	32 – 12
6LH–4380R–00	32 – 8
6LH–43810–00	32 – 2
6LH–43811–00	32 – 11
6C5–43816–00	32 – 32
6C6–43817–00	32 – 30
6BC–43818–00	28 – 5
6EK–4381B–00	32 – 21
6LH–43821–00	32 – 5
6CJ–43829–20	32 – 23
6EK–4382E–00	32 – 39
6D8–4382L–00	32 – 62
6EK–43830–00	32 – 35
6EK–43831–00	32 – 63
6D8–43841–00	32 – 55
6D8–43843–00	32 – 50
6D8–43844–00	32 – 48
6H1–43844–10	32 – 59
6GR–43845–00	32 – 66
69A–4384F–00	32 – 56
6H1–4384G–11	32 – 58
62X–4384H–00	32 – 26
6D8–4384M–00	32 – 37
6D8–43851–00	32 – 45
6C6–43853–00	32 – 41
6C5–43854–00	32 – 52
6C5–43855–10	32 – 46
6EK–43856–00	32 – 49
6EK–43861–00	32 – 6
6CJ–43861–10	32 – 22
6H1–43862–00	32 – 13
	32 – 16
63P–43863–10	32 – 7
	32 – 9
67F–43865–00	32 – 10
62X–4386K–00	33 – 7
6EK–43875–00	32 – 20
61A–43876–00	32 – 65
63P–43879–10	33 – 8
6C6–4387G–00	32 – 42

PART NO. N° PIECES	REF. NO.
6LH–43880–01	33 – 1
6LH–43881–01	33 – 10
6LH–43882–10	33 – 11
6H1–43883–00	32 – 38
6LH–43885–00	29 – 30
6EK–43892–10	33 – 4
6C5–43895–00	32 – 51
6EK–43899–00	32 – 25
69J–4389J–00	32 – 31
	32 – 36
63P–44117–01	26 – 8
63P–44118–00	26 – 23
6DA–44120–02	26 – 18
6DA–44120–12	26 – 18
6DA–44121–00	26 – 16
63P–44122–00	26 – 13
63P–44150–01	36 – 18
6DA–44176–00	26 – 7
703–44189–20	39 – 36
703–44189–30	39 – 43
703–44189–40	39 – 41
6X3–44191–00	39 – 48
6DA–44194–00	30 – 29
61A–44311–01	36 – 24
6E5–44312–00	36 – 29
6E5–44315–A0	36 – 33
	45 – 16
	45 – 27
61A–44322–02	36 – 25
	45 – 22
6G5–44323–01	36 – 32
	45 – 26
6E5–44352–01	36 – 30
	45 – 25
6DA–44361–00	37 – 1
6DA–44361–10	37 – 1
6E5–44365–01	36 – 28
	37 – 3
6E5–44366–01	34 – 30
6P2–44391–00	23 – 26
63P–44511–00	30 – 31
6DA–44514–00	30 – 22
6DA–44526–00	30 – 26
6G5–44526–00	27 – 3
6LP–44526–00	29 – 9
6DA–44532–00	30 – 27
69J–44533–00	30 – 16
6LP–44536–00	29 – 10

PART NO. N° PIECES	REF. NO.
68V–44551–00–8D	30 – 6
6DA–44551–00–CA	30 – 6
6DA–44552–00–CA	30 – 19
63P–44553–00–8D	30 – 19
60V–44555–00	30 – 10
63P–44555–00	30 – 10
63P–44556–00–8D	30 – 20
6DA–44575–00	30 – 9
61A–44575–01	30 – 9
6LH–45111–00–8D	34 – 20
6DA–45111–10–8D	34 – 20
69J–45123–00	34 – 13
	45 – 6
69J–45127–01	34 – 19
	45 – 9
6BB–45152–01	34 – 28
6DA–45155–01	34 – 31
6C5–45155–02	34 – 31
63P–45181–02	34 – 17
6J9–45214–00	37 – 8
6J9–45215–00	37 – 9
6AW–45251–00	1 – 15
	27 – 2
6DA–45300–03–8D	36 – 1
6DA–45300–14–8D	36 – 1
6J9–45301–07–8D	36 – 2
6E5–45318–00	34 – 23
6E5–45321–00	36 – 14
6E5–45331–00–9S	36 – 36
6J9–45332–00–CA	36 – 57
688–45341–10	36 – 7
6E5–45344–00	36 – 42
6J9–45371–01	1 – 17
	37 – 12
688–45375–00	36 – 11
663–45376–00	36 – 10
63P–45378–00	36 – 12
63P–45379–00	34 – 36
6G5–45383–01	36 – 67
6G5–45384–02	36 – 68
63P–45501–01	36 – 44
6DA–45501–10	36 – 44
61A–45527–00	36 – 23
6G5–45536–01	36 – 9
61A–45538–00	36 – 20
6DA–45551–00	36 – 45
6DA–45560–00	36 – 47
6G5–45567–01	36 – 5

PART NO. N° PIECES	REF. NO.
6G5–45567–10	36 – 5
6G5–45567–20	36 – 5
6G5–45567–30	36 – 5
6G5–45567–40	36 – 5
6G5–45567–50	36 – 5
6G5–45567–60	36 – 5
6DA–45571–00	36 – 59
6G5–45576–10	36 – 60
6G5–45577–02	36 – 64
6G5–45577–10	36 – 64
6G5–45577–20	36 – 64
6G5–45577–30	36 – 64
6G5–45577–40	36 – 64
6G5–45577–50	36 – 64
6G5–45577–60	36 – 64
6E5–45587–01	36 – 39
6E5–45587–10	36 – 39
6E5–45587–20	36 – 39
6E5–45587–30	36 – 39
6E5–45587–40	36 – 39
6E5–45587–50	36 – 39
6E5–45587–60	36 – 39
6J9–45611–01	36 – 48
6DA–45631–01	36 – 55
6E5–45633–01	36 – 56
6E5–45634–02	36 – 49
6G5–45930–00	37 – 19
68F–45930–20	37 – 20
68F–45932–20	37 – 20
6CE–45932–20	37 – 20
6CE–45934–20	37 – 20
6CE–45936–20	37 – 20
6G5–45941–00	37 – 19
6G5–45943–01	37 – 19
6G5–45945–01	37 – 19
6G5–45947–01	37 – 19
6G5–45949–00	37 – 19
6G5–45952–00	37 – 19
60H–45970–00	37 – 20
68F–45970–20	37 – 20
6CE–45970–20	37 – 20
60H–45972–00	37 – 20
6G5–45972–02	37 – 19
68F–45972–20	37 – 20
6CE–45972–20	37 – 20
60H–45974–00	37 – 20
6G5–45974–03	37 – 19
68F–45974–20	37 – 20

PART NO. N° PIECES	REF. NO.
6CE–45974–20	37 – 20
60H–45976–00	37 – 20
6G5–45976–01	37 – 19
68F–45976–20	37 – 20
60H–45978–00	37 – 20
6G5–45978–03	37 – 19
68F–45978–20	37 – 20
6E5–45987–01	37 – 14
688–45997–01	37 – 15
6CE–45B70–20	37 – 22
6CE–45B72–20	37 – 22
6CE–45B74–20	37 – 22
6CE–45C81–10	37 – 21
	37 – 23
6CE–45D72–20	37 – 20
6CE–45D74–20	37 – 20
703–48128–10	39 – 39
703–48129–00	39 – 42
6LP–48133–00	31 – 14
703–48152–10	39 – 6
703–48153–00	39 – 62
703–48189–00	39 – 19
703–48198–00	39 – 16
703–48207–25	38 – 1
	39 – 1
703–48211–10	39 – 25
703–48212–10	39 – 26
703–48213–10	39 – 27
703–48215–11	39 – 47
703–48219–10	39 – 34
703–48221–10	39 – 28
703–48222–20	39 – 31
703–48223–10	39 – 32
703–48225–10	39 – 33
703–48227–00	39 – 30
703–48232–00	39 – 2
703–48234–00	39 – 20
703–48235–00	39 – 5
703–48236–00	39 – 18
703–48238–00	39 – 24
703–48243–00	39 – 17
703–48244–00	39 – 23
703–48245–00	39 – 13
703–48246–00	39 – 29
701–48248–00	39 – 15
703–48252–00	39 – 14
703–48261–01	39 – 4
703–48264–00	39 – 8

NUMERICAL INDEX
INDEX NUMERIQUE

PART NO. N° PIECES	REF. NO.
703–48265–10	39 – 11
703–48268–00	39 – 7
703–48271–00	39 – 3
703–48281–00	39 – 35
703–48284–10	39 – 59
701–48287–00	39 – 46
703–48293–11	39 – 45
701–48320–50	38 – 2
701–48320–60	38 – 2
701–48320–80	38 – 2
6E5–48344–00	26 – 5
	26 – 39
703–48345–01	39 – 21
701–48350–00	38 – 2
701–48350–20	38 – 2
703–48358–01	39 – 22
6DA–48531–00	26 – 1
6E5–48538–00	26 – 3
6LW–61385–00	29 – 29
6LP–61501–00	29 – 15
6DA–8132G–01	16 – 19
6DA–81337–01	16 – 12
6DA–81410–00	16 – 3
6DA–81639–01	17 – 18
6CB–81800–02	22 – 1
69J–81801–11	22 – 5
6CB–81807–00	22 – 8
6CB–81809–00	22 – 14
67F–81810–00	22 – 3
67F–81813–00	22 – 6
6CB–81820–00	22 – 7
67F–81821–00	22 – 11
6DA–81822–00	21 – 6
6CB–81826–00	22 – 22
69J–81828–00	22 – 23
67F–81830–00	22 – 16
6CB–81832–00	22 – 9
6CB–81836–00	22 – 10
6C5–81839–00	22 – 19
67F–8183R–00	22 – 13
60V–8183T–00	22 – 17
6P2–8183X–00	18 – 5
69J–81840–11	22 – 4
67F–81841–00	22 – 12
6CB–81842–00	22 – 18
67F–81846–00	22 – 24
67F–81850–00	22 – 2
6C5–81869–00	22 – 21

PART NO. N° PIECES	REF. NO.
67F–81891–00	22 – 15
6LW–81919–00	17 – 35
6Y8–81920–01	42 – 2
6Y8–81920–11	42 – 4
60V–81925–00	21 – 4
6C5–81941–01	22 – 20
6DA–81942–01	18 – 11
6DA–81948–01	17 – 5
69J–81949–03	20 – 18
6DA–81952–10	17 – 11
6DA–81960–10	18 – 1
6DA–81975–01	18 – 2
6FM–81980–01	20 – 3
6EE–81994–41	16 – 28
6EE–81994–51	16 – 29
6AH–81996–01	23 – 33
6DA–82105–02	18 – 22
6P2–82113–00	17 – 30
6T4–82117–00	28 – 1
6GR–82131–01	25 – 30
6LH–82147–00	29 – 1
66K–82149–00	27 – 11
6DA–82149–00	27 – 11
6CB–82151–00	17 – 24
6G1–82151–01	42 – 9
6CB–82151–10	17 – 25
67F–82151–20	20 – 5
6CB–82151–20	17 – 26
6CB–82151–30	17 – 27
6CB–82151–41	17 – 23
69J–8215B–00	20 – 6
6DA–82170–12	17 – 22
63P–82181–20	33 – 5
6CB–82310–02	19 – 3
6DA–82314–01	19 – 5
6A0–82317–01	16 – 15
6DA–82388–00	18 – 16
	21 – 9
6DA–82389–00	18 – 17
6DA–82398–01	16 – 23
703–82510–45	39 – 49
6Y8–82521–11	42 – 6
6Y8–82521–51	42 – 7
6DA–8252U–01	17 – 20
703–82531–00	39 – 52
6K1–82532–00	39 – 51
703–82540–00	39 – 56
6DA–82553–00	20 – 11

PART NO. N° PIECES	REF. NO.
6LH–82553–00	28 – 12
6Y8–82553–31	42 – 5
682–82556–00	39 – 54
6P2–82560–01	18 – 13
6FM–82563–01	20 – 14
703–82563–21	39 – 58
688–82575–02	39 – 53
703–82577–00	39 – 50
6DA–8257V–00	17 – 32
68F–82582–00	21 – 5
6AW–82582–00	20 – 2
6Y8–82582–11	20 – 4
	42 – 10
6E9–82588–00	18 – 14
61A–82588–01	26 – 10
688–8258A–20	39 – 55
6LY–82590–01	20 – 1
703–82591–00	39 – 60
703–82592–00	39 – 61
69J–8259F–00	26 – 9
60V–8259F–01	26 – 31
6DA–8259M–10	20 – 10
703–83383–11	39 – 57
6YM–83512–00	41 – 5
6YM–83553–01	42 – 11
6Y8–83553–02	42 – 8
6E5–83558–00	34 – 33
6YD–8356N–00	42 – 1
6AW–83651–01	20 – 13
6AW–8366B–10	43 – 2
63P–8366C–00	43 – 3
60V–8366D–00	43 – 5
6LW–8366G–00	25 – 17
63P–8366P–01	25 – 31
68F–83688–10	9 – 15
6YM–83710–1B	41 – 1
6YM–83956–00	41 – 3
6YD–83957–00	41 – 4
6P2–85075–00	19 – 8
6LW–85335–00	25 – 33
6Y8–85371–01	42 – 3
60V–85516–00	10 – 21
68F–85516–01	17 – 7
	17 – 12
6CB–85544–10	17 – 28
689–85547–01	14 – 1
6DA–85548–10	17 – 15
6DA–85561–00	16 – 6

PART NO. N° PIECES	REF. NO.
6CB–85580–01	16 – 5
6CJ–85780–02	20 – 15
6CB–85790–00	20 – 12
6GR–85887–00	28 – 10
6P2–85896–00	19 – 7
6LY–8591A–00	17 – 1
6DA–85991–01	17 – 3
6C5–86120–00	10 – 31
6LH–87226–00	12 – 40
6YM–87278–00	41 – 6
6DA–8A410–02	26 – 35
63P–8A4L2–07	43 – 1
K0F–A3233–00	4 – 14
K0F–A3741–00	8 – 5
K0F–A3742–00	8 – 6
K0F–A3743–00	8 – 3
K0F–A3751–00	8 – 8
K0F–A3751–10	8 – 8
K0F–A3751–20	8 – 8
K0F–A3751–30	8 – 8
K0F–A3751–40	8 – 8
K0F–A3751–50	8 – 8
K0F–A3751–60	8 – 8
K0F–A3751–70	8 – 8
K0F–A3751–80	8 – 8
K0F–A3751–90	8 – 8
K0F–A3751–A0	8 – 8
K0F–A3751–B0	8 – 8
K0F–A3751–C0	8 – 8
K0F–A3751–D0	8 – 8
K0F–A3751–E0	8 – 8
K0F–A3751–F0	8 – 8
K0F–A3751–G0	8 – 8
K0F–A3751–H0	8 – 8
K0F–A3751–J0	8 – 8
K0F–A3751–K0	8 – 8
K0F–A3751–L0	8 – 8
K0F–A3751–M0	8 – 8
K0F–A3751–N0	8 – 8
K0F–A3751–P0	8 – 8
K0F–A3751–R0	8 – 8
K0F–A3751–S0	8 – 8
K0F–A3751–T0	8 – 8
K0F–A3753–00	8 – 8
K0F–A3753–10	8 – 8
K0F–A3753–20	8 – 8
K0F–A3753–30	8 – 8
K0F–A3753–40	8 – 8

PART NO. N° PIECES	REF. NO.
K0F–A3753–50	8 – 8
K0F–A3753–60	8 – 8
K0F–A3753–70	8 – 8
7BB–G3861–00	32 – 18
6FA–W0001–02	44 – 1
63P–W0001–22	45 – 1
61A–W0078–A4	1 – 19
	45 – 21
6FA–W009A–05–9S	5 – 1
6DA–W009B–17–9S	3 – 1
6CB–W1165–10	4 – 9
6LH–W1390–00	12 – 22
6DA–W4624–00	8 – 17
6DA–W8145–00	16 – 1
63P–W8195–00	18 – 4
6EK–W9010–00	16 – 2
90101–12066	27 – 26
90101–12070	27 – 22
90101–12078	27 – 27
90101–14005	30 – 15
90105–06028	3 – 5
	6 – 7
	6 – 23
	6 – 31
90105–06037	6 – 46
90105–06039	3 – 34
90105–06054	10 – 3
90105–06151	5 – 21
	6 – 41
90105–06M07	5 – 14
	6 – 18
90105–06M08	10 – 11
	10 – 14
90105–08175	3 – 22
	5 – 20
90105–08M87	21 – 8
90105–10406	3 – 17
	3 – 21
90105–10M00	37 – 13
90105–14012	30 – 15
	30 – 24
90109–06M81	43 – 6
90109–08019	26 – 33
90110–08133	31 – 3
90111–06142	24 – 9
90111–06144	24 – 8
	24 – 8
	29 – 13

PART NO. N° PIECES	REF. NO.
90111–06144	29 – 28
90111–08078	2 – 13
90119–06078	6 – 36
90119–06276	3 – 14
90119–06286	36 – 17
90119–06287	34 – 37
90119–06291	16 – 18
90119–06297	26 – 38
90119–06299	10 – 12
90119–06309	10 – 20
	10 – 35
	14 – 15
90119–06323	29 – 5
90119–06328	17 – 9
	17 – 14
90119–06MA3	3 – 26
	6 – 14
90119–07001	5 – 7
90119–07234	5 – 8
90119–08020	9 – 14
90119–08182	34 – 2
90119–08187	23 – 22
90119–08189	34 – 5
90119–08191	36 – 35
	45 – 29
90119–08M66	3 – 18
90119–10007	34 – 21
90119–10024	30 – 23
90119–10050	8 – 14
90119–10054	28 – 4
90119–10058	29 – 25
	30 – 21
90119–10072	37 – 7
90119–10M07	8 – 19
90149–11001	5 – 19
90151–05M05	6 – 3
90152–05M08	37 – 10
90159–06053	24 – 2
	24 – 11
90159–06M28	24 – 9
90169–05M00	17 – 21
	18 – 12
90170–12M28	27 – 29
90170–16M01	36 – 46
90171–18M04	37 – 17
90176–14002	30 – 17
90179–06M28	2 – 4
90179–08003	21 – 3

NUMERICAL INDEX
INDEX NUMERIQUE

PART NO. N° PIECES	REF. NO.
90183–061A8	24 – 3
	24 – 10
90185–05002	37 – 11
90185–14M00	30 – 28
90201–053R1	2 – 10
90201–10060	28 – 3
90201–12069	33 – 12
90201–12426	27 – 24
90201–13M01	27 – 23
90201–156J2	23 – 12
90201–15M58	30 – 14
90201–16M01	30 – 25
90201–16M55	30 – 13
90201–186F1	6 – 33
	44 – 14
90201–22M01	36 – 21
90201–23018	31 – 10
90201–30M92	36 – 65
90201–31008	31 – 5
90201–35008	30 – 11
90201–38M60	30 – 2
90202–08M20	26 – 14
90202–16061	26 – 21
	37 – 4
90202–23001	31 – 13
90202–31001	31 – 8
90202–32M19	30 – 12
90202–40M47	30 – 5
90206–15M18	23 – 13
90206–22M19	36 – 22
90249–06M19	27 – 18
90250–08M07	36 – 54
90269–07003	25 – 16
90280–04M05	36 – 31
	45 – 30
90282–04M00	36 – 66
90338–25004	3 – 12
90340–08002	36 – 6
90340–14M06	5 – 9
	35 – 6
90340–18M09	6 – 32
90344–51019	5 – 4
90386–06M12	26 – 17
90386–10M16	27 – 16
90386–12069	26 – 30
90386–15M73	23 – 10
90386–16M66	26 – 20
90386–22M98	28 – 6

PART NO. N° PIECES	REF. NO.
90386–22M98	28 – 8
90386–38M32	30 – 4
90387–06176	17 – 8
	17 – 13
90387–06263	35 – 9
90387–06283	10 – 1
90387–06289	10 – 22
	10 – 34
	14 – 17
90387–06M43	24 – 4
	24 – 13
90387–06M69	16 – 17
90387–07054	2 – 8
90387–08M37	23 – 21
90387–08M45	2 – 16
90387–10094	2 – 14
90387–11005	5 – 18
90387–14004	30 – 32
90387–22040	31 – 11
90387–30015	31 – 6
90430–06M03	5 – 15
	6 – 19
90430–08003	1 – 16
	36 – 8
	45 – 11
90430–14115	5 – 10
	43 – 4
	44 – 2
90430–14M09	1 – 7
	35 – 7
	45 – 3
90445–07017	43 – 8
90445–07044	34 – 35
90445–07045	34 – 35
90445–09008	7 – 4
90445–09120	11 – 3
90445–10056	11 – 8
90445–10057	7 – 14
90445–13M25	15 – 2
90445–23002	37 – 2
90447–07013	43 – 9
90462–12013	25 – 20
90464–07M41	11 – 2
90464–09008	18 – 21
90464–09020	7 – 10
90464–09130	10 – 26
	16 – 21
	16 – 25

PART NO. N° PIECES	REF. NO.
90464–09142	7 – 9
90464–09M21	7 – 5
90464–09M31	7 – 12
90464–10011	11 – 17
90464–11121	10 – 24
90464–12002	16 – 4
90464–12010	7 – 8
	13 – 3
90464–12089	18 – 9
90464–12183	9 – 10
	9 – 22
	17 – 6
	18 – 8
90464–13249	18 – 20
	19 – 2
	25 – 14
90464–13260	13 – 18
90464–15007	13 – 5
90464–15195	20 – 17
90464–16001	11 – 12
	11 – 26
	11 – 27
90464–16003	13 – 4
90464–18004	11 – 25
	13 – 17
	25 – 19
90464–18246	18 – 10
90464–20181	6 – 35
	9 – 21
	13 – 1
	16 – 22
	17 – 16
	18 – 19
	19 – 1
	21 – 10
90464–20258	23 – 30
90464–21256	25 – 10
90464–26001	20 – 16
90464–31002	28 – 13
90464–32002	17 – 34
90464–99004	9 – 8
	32 – 68
90465–08M63	13 – 6
90465–08M83	7 – 16
90465–11M10	7 – 7
	10 – 25
	11 – 4
	11 – 5

PART NO. N° PIECES	REF. NO.
90465–11M10	11 – 9
	13 – 14
	13 – 16
	14 – 5
	14 – 20
	25 – 3
	25 – 11
	29 – 14
	34 – 34
	40 – 4
	43 – 7
90465–11M59	6 – 24
	6 – 48
	20 – 9
90465–13M97	16 – 9
90467–09M09	11 – 10
90467–120A7	13 – 9
90467–140A9	13 – 10
90467–141A2	13 – 13
90468–18008	26 – 6
	26 – 15
	26 – 40
90480–06M19	15 – 4
90480–12314	10 – 2
	16 – 14
	19 – 6
90480–13004	2 – 7
90480–13163	23 – 28
90480–13M24	24 – 5
	24 – 12
90480–14031	10 – 33
90480–15013	14 – 16
90480–16009	2 – 11
90480–16025	16 – 13
90480–19031	25 – 9
90480–20M05	6 – 10
90480–22M81	23 – 20
90501–12082	26 – 27
90501–16M11	6 – 9
90501–16M37	36 – 50
90506–16010	27 – 20
90506–18025	8 – 20
90506–22001	23 – 17
90508–20M31	26 – 29
91318–03005	32 – 61
91318–03025	32 – 60
91318–05030	32 – 53
91318–05045	32 – 34

PART NO. N° PIECES	REF. NO.
91380–06025	32 – 67
91490–40030	37 – 18
91609–16010	32 – 14
91690–30010	26 – 4
	26 – 25
91690–30020	27 – 19
91690–40010	3 – 10
	3 – 27
91690–40025	29 – 3
91690–60022	28 – 9
91809–08006	5 – 6
91814–18002	3 – 3
92903–08100	18 – 25
92990–06100	2 – 19
92990–08600	2 – 15
	39 – 38
92990–18200	37 – 16
92995–05100	9 – 17
92995–05600	9 – 18
92995–14600	30 – 18
	30 – 30
93101–28M16	36 – 37
	45 – 17
93101–30M17	36 – 62
	45 – 19
93102–38008	8 – 16
	44 – 19
93102–85008	4 – 4
	44 – 18
93106–09014	36 – 16
	45 – 13
93106–19001	32 – 4
93210–03494	29 – 22
93210–04N51	32 – 43
93210–064A5	32 – 44
93210–07003	36 – 13
	45 – 10
93210–08001	3 – 30
	44 – 17
93210–09165	26 – 19
93210–10107	29 – 21
93210–12327	32 – 64
93210–12648	3 – 16
	44 – 9
93210–13M63	6 – 4
	23 – 11
	44 – 10
93210–15414	29 – 16

PART NO. N° PIECES	REF. NO.
93210–19MJ3	35 – 21
	44 – 23
93210–22298	31 – 12
93210–24M79	6 – 43
	44 – 24
93210–25552	3 – 11
	35 – 18
	44 – 6
	44 – 21
93210–25647	3 – 13
	44 – 7
93210–29282	31 – 7
93210–357A3	6 – 45
	44 – 25
93210–37160	36 – 27
	45 – 15
	45 – 24
93210–37MH7	30 – 3
93210–55001	33 – 13
93210–55M14	36 – 41
	45 – 18
93210–58144	36 – 15
	45 – 12
93210–68N50	32 – 24
93210–86M38	36 – 26
	45 – 14
	45 – 23
93210–97M55	36 – 63
	45 – 20
93306–209U0	36 – 58
93311–928U5	36 – 3
93315–43061	36 – 61
93317–330U2	36 – 38
93332–000V3	36 – 4
93341–930V2	36 – 40
93410–16006	26 – 22
93410–22M11	31 – 9
93410–30101	31 – 4
93410–36102	30 – 8
93420–36M01	34 – 24
93430–06024	39 – 12
93501–04M02	26 – 26
93501–08001	32 – 47
93503–16003	32 – 17
	36 – 53
93505–32038	32 – 15
	32 – 40
93507–32009	36 – 51

NUMERICAL INDEX
INDEX NUMERIQUE

PART NO. N° PIECES	REF. NO.
93511–32017	36 – 52
93604–26256	32 – 54
93605–10108	8 – 10
	8 – 12
93606–12019	4 – 3
	5 – 5
	36 – 34
	45 – 28
93606–19M23	34 – 15
93608–16M16	31 – 2
	34 – 4
	34 – 22
	35 – 4
	37 – 5
93700–06002	27 – 6
	27 – 10
	27 – 21
	31 – 15
93700–06M01	26 – 32
93700–06M03	26 – 34
94702–00400	1 – 18
	5 – 25
95022–06035	16 – 10
95333–08600	18 – 24
95380–05600	39 – 9
95380–06600	2 – 20
	10 – 32
	39 – 44
95380–12600	27 – 25
95380–12700	27 – 28
95604–14200	30 – 17
95780–08300	2 – 17
95812–06025	35 – 11
95D75–06025	9 – 4
	9 – 6
95D75–08035	17 – 4
95D95–06010	13 – 7
	28 – 2
	30 – 7
	34 – 32
95D95–06012	7 – 17
	9 – 20
	10 – 19
	14 – 18
	18 – 15
	23 – 19
	25 – 15
	25 – 18

PART NO. N° PIECES	REF. NO.
95D95–06012	25 – 21
	25 – 29
	25 – 32
95D95–06014	23 – 4
95D95–06016	10 – 29
	16 – 20
	16 – 24
	17 – 10
	18 – 18
	21 – 11
	35 – 22
95D95–06020	10 – 5
	17 – 2
	17 – 19
95D95–06025	14 – 7
	19 – 4
95D95–06030	5 – 24
	16 – 11
95D95–06040	25 – 25
95D95–06065	25 – 23
95D95–08012	23 – 16
95D95–08016	18 – 23
95D95–08020	26 – 2
95D95–08025	5 – 16
97380–05025	39 – 10
97380–08030	39 – 37
97513–08545	21 – 2
97595–05516	28 – 11
97595–05520	16 – 8
97602–04316	33 – 9
97780–50016	2 – 9
97780–50620	17 – 31
97780–60520	25 – 12
97780–60620	17 – 17
	17 – 33
97885–05016	9 – 16
97980–06216	34 – 26
97985–04116	26 – 11
97985–04308	20 – 8
97D95–06008	29 – 24
97D95–06012	34 – 29
97E75–06516	8 – 22
97E75–06520	29 – 6
97E75–06535	26 – 24
97E75–06540	35 – 17
97E75–08535	34 – 14
	35 – 3
97E75–08540	6 – 20

PART NO. N° PIECES	REF. NO.
97E75–08560	9 – 2
	34 – 11
97E75–10535	34 – 6
97E75–10545	34 – 3
97E95–06512	27 – 13
	29 – 11
	29 – 26
97E95–06516	20 – 7
	21 – 1
	43 – 11
97E95–06520	18 – 7
	19 – 9
97E95–06530	27 – 4
97E95–06535	18 – 3
97E95–06550	26 – 12
97E95–06610	18 – 6
97E95–08525	36 – 43
97E95–10645	37 – 6
98507–04008	12 – 34
98580–04006	39 – 40
98780–04016	3 – 9
	3 – 28
99001–08600	36 – 19
99002–03600	32 – 57
99009–47500	32 – 28
99530–08012	16 – 7
99590–10114	21 – 7

PART NO. N° PIECES	REF. NO.

PART NO. N° PIECES	REF. NO.

PART NO. N° PIECES	REF. NO.