YAMAHA

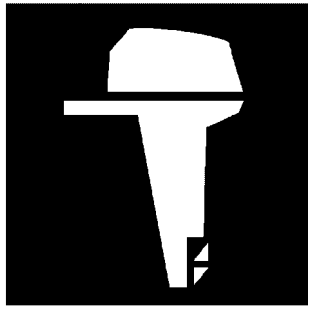

PARTS CATALOGUE
CATALOGUE DE PIECES DETACHEES

F20B-2026 (6HY9)

YAMAHA
GENUINE
Parts & Accessories

316HY-300F1

( )

F20B
PARTS CATALOGUE
©2026 by Yamaha Motor Co., Ltd.
1st edition, May 2026
All rights reserved.
Any reprinting or unauthorized use
without the written permission of
Yamaha Motor Co., Ltd.
is expressly prohibited.
Printed in Japan.

F20B
CATALOGUE DE PIECES DETACHEES
©2026 par Yamaha Motor Co., Ltd.
1re édition, mai 2026
Tous droits réservés
Toute réimpression ou utilisation
non autorisée sans la permission écrite
de Yamaha Motor Co., Ltd.
est formellement interdite.
Imprimé au Japon

FOREWORD

This Parts Catalogue is related to the parts for the model(s) on the cover page. When you are ordering replacement parts, please refer to this Parts Catalogue and quote both part numbers and part names correctly.

1. Modifications or additions which have been made after the issue of the Parts Catalogue will be announced in the Parts News.
   It is advisable that you make the necessary corrections to the Parts Catalogue according to the Parts News.

2. Abbreviations
   The following abbreviations are used in this Parts Catalogue.
   "UR" Use specified parts number.
   "UN" Use as many as needed.
   "AP" Alternate Parts
   "LM" Locally Made (Parts need to be ordered locally)
   "F#" Frame No. (Applicable machine No.)
   "O/S" Over Size

3. The number of components for assembly
   - Parts, which are to be supplied in an assembly, are listed with a dot (.) in front of the part name as shown below.
   - The numeral appearing to the right of each component part indicates the quantity of parts for each assembly unit.

PART NO.	DESCRIPTION	Q'TY	REMARKS
2F5–83310–60	FRONT FLASHER LIGHT ASSY	2	
115–83311–60	.BULB (6V–18W)	1	

4. Applicable colours of graphics are represented in the "REMARKS" as shown below.

PART NO.	DESCRIPTION	Q'TY	REMARKS
2N4–24110–00–X5	FUEL TANK COMP.	2	MXR
3J1–24240–10	.GRAPHIC, FUEL TANK	1	FOR MXR

5. Note that the illustrations for reference in finding parts numbers are not to be used for assembling. When assembling, please use the applicable service manual.

6. The asterisk (*) before a reference number indicates modified items after the first edition.

7. Applicable Serial No.
   Engine Serial No.

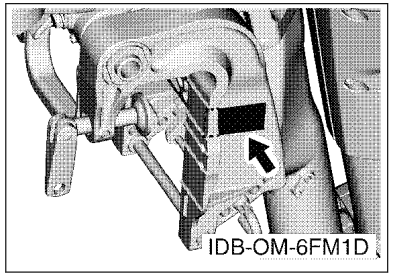

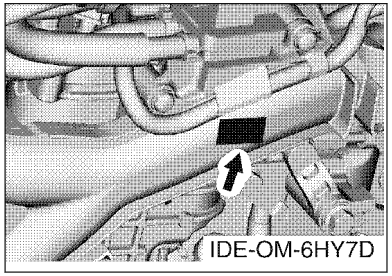

8. Applicable Engine Starting Serial No.

Model	Serial No.	Model	Serial No.
F20B	6HYK-1024517		

9. Applicable Colour Code

Abbreviation	Colour Name	Colour Code
DBN1	DARK BLUISH GRAY 1	008D

10. Quantity Column Information

Column No.	Name Of Q'ty Column	Applicable Model
1	MHB	F20MHB
2	WHB	F20WHB
3	EB	F20EB
4	PB	F20PB

AVANT–PROPOS

Ce catalogue de pièces détachées concerne les pièces pour le(s) modèle(s) indiqué(s) sur la page de couverture. Lorsque vous commandez des pièces de rechange, veuillez vous référer à ce catalogue de pieces détachées et indiquer clairement les numéros et les noms des pièces détachées.

1. Les modifications ou ajouts ayant été effectués après la parution du catalogue de pièces détachées seront décrits dans les Bulletins d'information concernant les pièces détachées.
   Il est recommandé que vous apportiez les corrections nécessaires au catalogue des pièces détachées en vous référant aux Bulletins d'information.

2. Abréviations
   Dans ce catalogue, les abréviations suivantes sont utilisées:
   "UR" Utiliser le numéro de pièces spécifié.
   "UN" Utiliser autant que nécessaire.
   "AP" Pièces de substitution
   "LM" Fabrication locale (les pièces doivent être commandées localement.)
   "F#" N° de cadre (applicable au N° de série)
   "O/S" Surdimensionné

3. Nombre de pièces d'un assemblage
   - Les pièces fournies comme composants d'un assemblage sont précédées d'un point (.) de la manière indiquée ci–dessous.
   - Le chiffre apparaissant à la droite de chaque composant indique la quantité de pièces pour chaque unité d'assemblage.

N° PIECES	DESCRIPTION	QTE	REMARQUES
2F5–83310–60	ENS. CLIGNOTANT AVANT	2	
115–83311–60	.AMPOULE (6V–18W)	1	

4. Les couleurs concernant les graphiques sont indiquées dans la colonne "REMARQUES", comme indiqué ci–dessous.

N° PIECES	DESCRIPTION	QTE	REMARQUES
2N4–24110–00–X5	RESERVOIR A ESSENCE.	2	MXR
3J1–24240–10	.GRAPHIQUE	1	POUR MXR

5. Veuillez noter que les illustrations sont indiquées à titre de référence pour trouver les numéros de pièces, non pour être utilisées lors de l'assemblage. Lors de l'assemblage, veuillez utiliser le manuel d'entretien adéquat.

6. L'astérisque (*) placé devant un numéro de référence indique des éléments qui ont été modifiés après la première édition.

7. N° de série applicable
   N° de Série du moteur

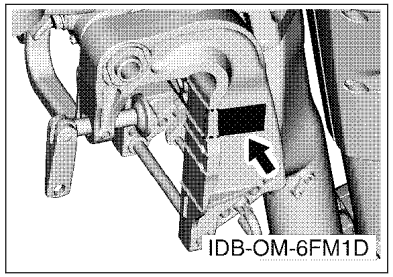

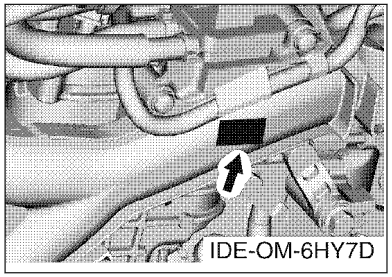

8. N° de série initial du moteur applicable

Modèle	N° de série	Modèle	N° de série
F20B	6HYK-1024517		

9. Code couleur applicable

Abréviation	Nom de la couleur	Code couleur
DBN1	DARK BLUISH GRAY 1	008D

10. Informations relatives à la colonne Quantité

N° de la colonne	Nom de la colonne Qté	Modèle applicable
1	MHB	F20MHB
2	WHB	F20WHB
3	EB	F20EB
4	PB	F20PB

CONTENTS

SCHEDULED SERVICE PARTS....1
TOP COWLING....2
CYLINDER & CRANKCASE 1....3
CRANKSHAFT & PISTON....4
CYLINDER & CRANKCASE 2....5
VALVE....6
INTAKE 1....7
INTAKE 2....8
FUEL INJECTION PUMP....10
OIL PUMP....12
FUEL 1....13
FUEL 2....15
STARTER....17
GENERATOR....19
ELECTRICAL 1....20
ELECTRICAL 2....21
ELECTRICAL 3....22
ELECTRICAL 4....23
ELECTRICAL 5....24
ELECTRICAL 6....25
STARTING MOTOR....26
BOTTOM COWLING....27
STEERING....29
STEERING FRICTION....31
CONTROL 1....32
CONTROL 2....33
REMO CON ATTACHMENT....35
BRACKET 1....36
BRACKET 2....38
BRACKET 3....40
POWER TRIM & TILT ASSY....42
UPPER CASING....45
OIL PAN....46
LOWER CASING & DRIVE 1....47
LOWER CASING & DRIVE 2....50
FUEL TANK 1....52
FUEL TANK 2....53
STEERING GUIDE....54
OPTIONAL PARTS 1....55
OPTIONAL PARTS 2....57
OPTIONAL PARTS 3....58
OPTIONAL PARTS 4....61
OPTIONAL PARTS 5....62
OPTIONAL PARTS 6....63
OPTIONAL PARTS 7....64
REPAIR KIT 1....65
REPAIR KIT 2....66

INDEX

NUMERICAL INDEX....67

TABLE DES MATIERES

PIECES MAINTENANCE PERIODIQUE.....1
CAPOT SUPERIEUR..... 2
CYLINDRE & CARTER 1..... 3
VILEBREQUIN & PISTON.....4
CYLINDRE & CARTER 2..... 5
SOUPAPE..... 6
ADMISSION 1.....7
ADMISSION 2.....8
FUEL INJECTION PUMP..... 10
POMPE A HUILE.....12
CARBURANT 1..... 13
CARBURANT 2..... 15
DEMARREUR.....17
GENERATRICE.....19
PARTIE ELECTRIQUE 1.....20
PARTIE ELECTRIQUE 2.....21
PARTIE ELECTRIQUE 3.....22
PARTIE ELECTRIQUE 4.....23
PARTIE ELECTRIQUE 5.....24
PARTIE ELECTRIQUE 6.....25
DEMARREUR ELECTRIQUE.....26
CAPOT INFERIEUR.....27
DIRECTION.....29
CUVETTE POIGNEE DE DIRECTION.....31
COMMANDE 1..... 32
COMMANDE 2..... 33
COMMANDE A DISTANCE.....35
SUPPORT 1..... 36
SUPPORT 2..... 38
SUPPORT 3..... 40
PUISSANCE PARER ET INCLINER..... 42
FOURREAU.....45
VENTILATEUR D'HUILE..... 46
BOITIER D'HELICE TRANSMISSION1.....47
BOITIER D'HELICE TRANSMISSION2.....50
RESERVOIR A CARBURANT 1.....52
RESERVOIR A CARBURANT 2.....53
FIXATION DE DIRECTION..... 54
PIECES OPTIONNELLES 1.....55
PIECES OPTIONNELLES 2.....57
PIECES OPTIONNELLES 3.....58
PIECES OPTIONNELLES 4.....61
PIECES OPTIONNELLES 5.....62
PIECES OPTIONNELLES 6.....63
PIECES OPTIONNELLES 7.....64
KITS DE REPARATION 1..... 65
KITS DE REPARATION 2..... 66

INDEX

INDEX NUMERIQUE.....67

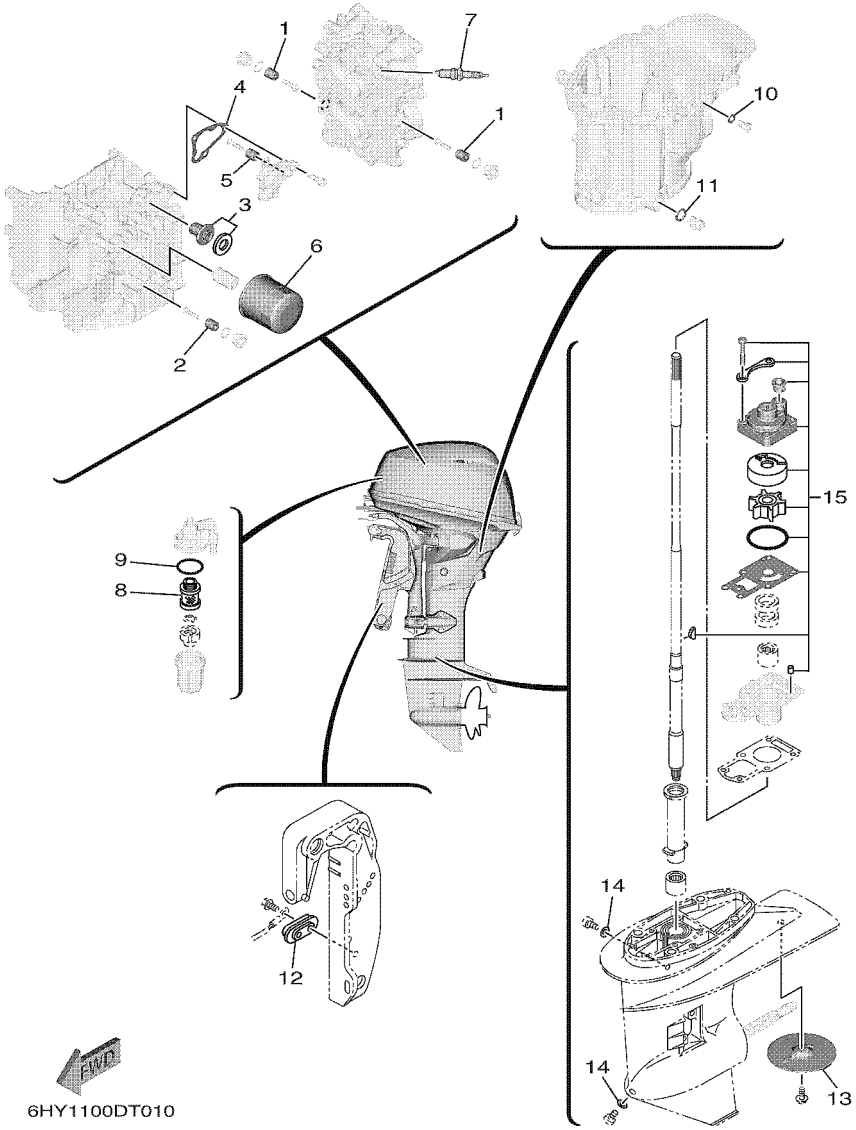

FIG. 1 SCHEDULED SERVICE PARTS — PIECES MAINTENANCE PERIODIQUE

REF. NO.	PART NO. N° PIECES	DESCRIPTION DESCRIPTION	MHB	WHB	EB	PB		REMARKS REMARQUES
1	6G8–11325–00	ANODE ANODE	2	2	2	2		
2	6G8–11325–00	ANODE ANODE	1	1	1	1		
3	6FM–12411–00	THERMOSTAT THERMOSTAT	1	1	1	1		
4	6FM–12414–00	GASKET, COVER JOINT, COUVERCLE	1	1	1	1		
5	6G8–11325–00	ANODE ANODE	1	1	1	1		
6	5GH–13440–90	ELEMENT ASSY, OIL CLEANER ELEMENT, FILTRE A HUILE	1	1	1	1		
7	94702–00418	PLUG, SPARK (NGK DPR6EB-9) BOUGIE D,ALLUMAGE (NGK DPR6EB-	2	2	2	2		
8	6D8–24563–00	ELEMENT, FILTER ELEMENT, FILTRE	1	1	1	1		
9	6D8–24564–00	GASKET JOINT	1	1	1	1		
10	90430–08143	GASKET JOINT	1	1	1	1		
11	90430–14M09	GASKET JOINT	1	1	1	1		
12	65W–45251–00	ANODE ANODE				1		
13	664–45371–01	TAB-TRIM ANODE DERIVE	1	1	1	1		
14	90430–08003	GASKET JOINT	2	2	2	2		
15	6FM–W0078–02	WATER PUMP REPAIR KIT KIT DE REPARATION DE LA POMPE	1	1	1	1		

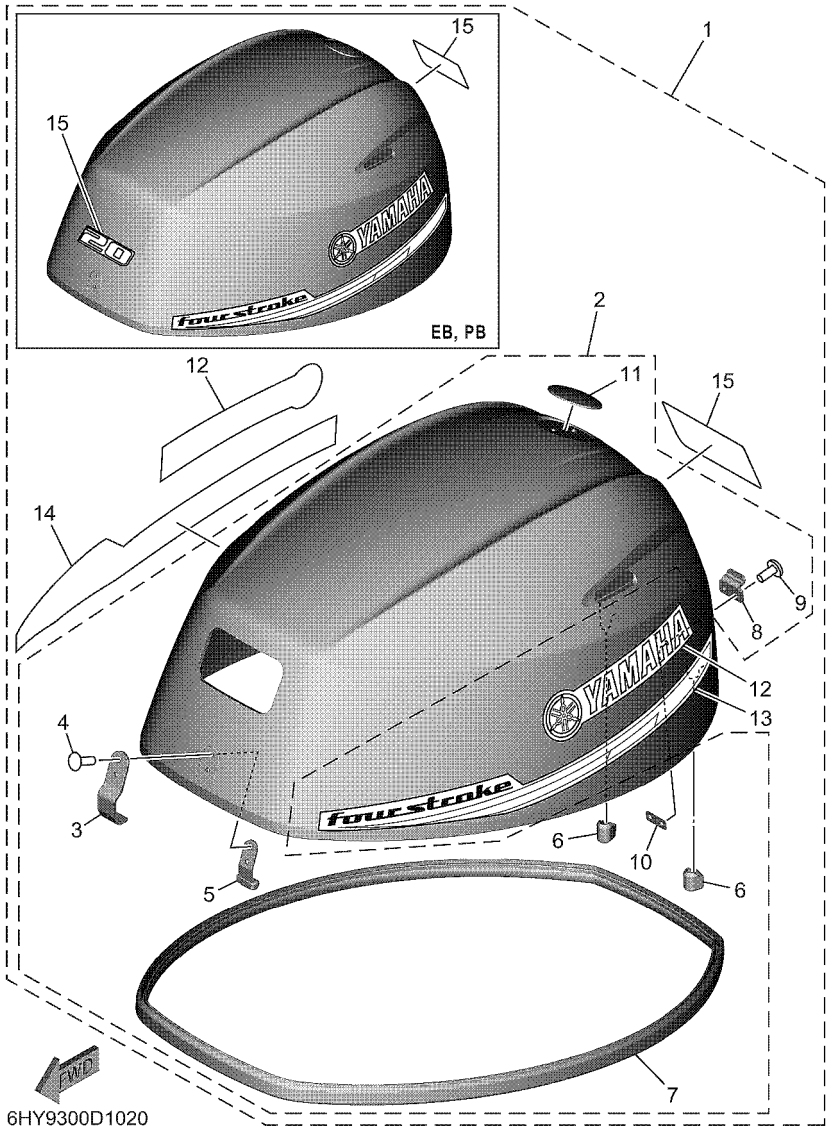

FIG. 2 TOP COWLING — CAPOT SUPERIEUR

REF. NO.	PART NO. N° PIECES	DESCRIPTION DESCRIPTION	MHB	WHB	EB	PB		REMARKS REMARQUES
1	6HY–42610–02	TOP COWLING ASSY CAPOT (ENS.)	1	1				
	6GX–42610–12	TOP COWLING ASSY CAPOT (ENS.)			1	1		
2	6FM–4261A–02	.TOP COWLING W/O GRAPHICS .CAPOT SUPERIEUR SANS GRAPHIQUE	1	1				
	6FM–4261A–12	.TOP COWLING W/O GRAPHICS .CAPOT SUPERIEUR SANS GRAPHIQUE			1	1		
3	6FM–42651–00	..HOOK ..CROCHET	1	1	1	1		
4	90266–04M01	..RIVET ..RIVET	2	2	2	2		
5	6FM–42649–00	..HOLDER, CLAMP BAND ..SUPPORT, SANDOW DE SERRAGE	1	1	1	1		
6	6BG–42662–01	..DAMPER ..AMORTISSEUR	2	2	2	2		
7	6FM–42615–00	..SEAL ..JOINT	1	1	1	1		
8	6FM–42652–00	..HOOK ..CROCHET	1	1	1	1		
9	90266–04M01	..RIVET ..RIVET	2	2	2	2		
10	6FM–42647–00	..HOLDER, CLAMP BAND ..SUPPORT, SANDOW DE SERRAGE	1	1	1	1		
11	6AH–42697–10	..TUNING FORK MARK ..MARQUE, YAMAHA	1	1	1	1		
12	6FM–42681–01	.MARK, COWLING .ADHESIF, CAPOT	2	2	2	2		
13	6FM–42675–01	.GRAPHIC, SIDE 1 .EMBLEME	1	1	1	1		
14	6FM–42676–01	.GRAPHIC, SIDE 2 .EMBLEME	1	1	1	1		
15	6DN–42677–11	.GRAPHIC, FRONT .ADHESIF, AVANT	1	1				
	6DN–42677–11	.GRAPHIC, FRONT .ADHESIF, AVANT			2	2		

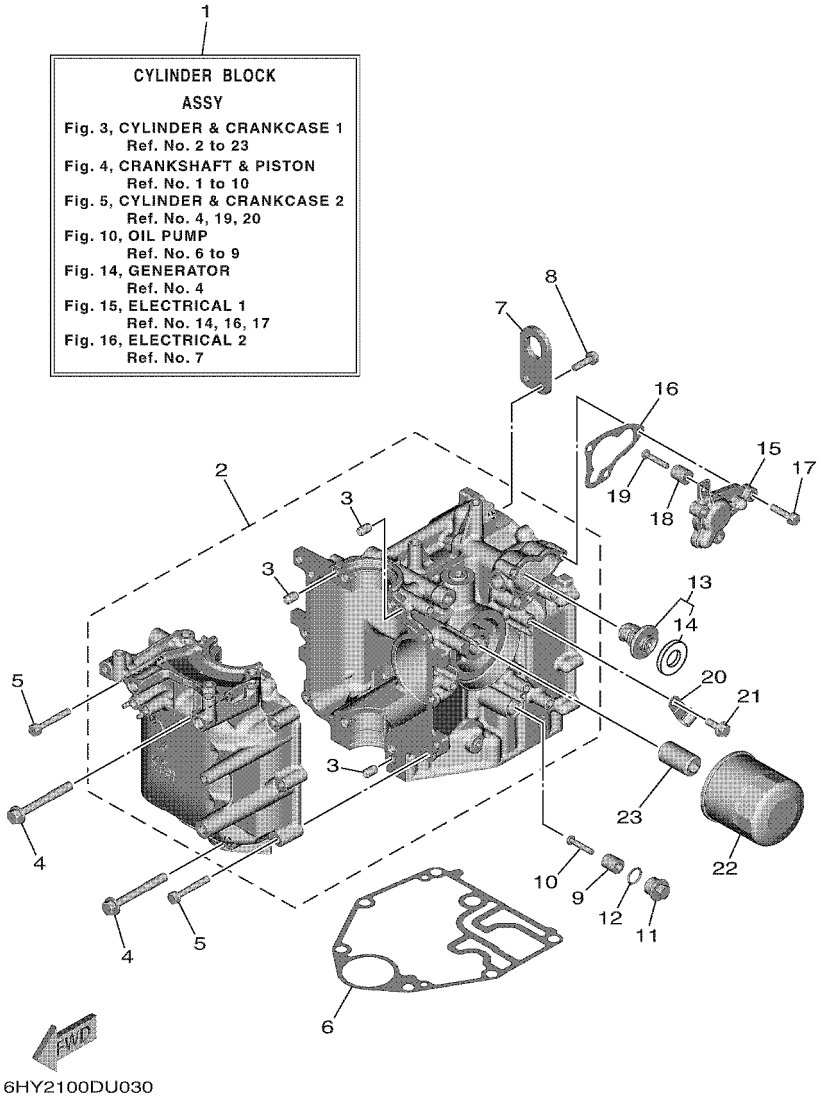

FIG. 3 CYLINDER & CRANKCASE 1 — CYLINDRE & CARTER 1

REF. NO.	PART NO. N° PIECES	DESCRIPTION DESCRIPTION	MHB	WHB	EB	PB		REMARKS REMARQUES
1	6FM–W009B–02–1S	CYLINDER BLOCK ASSY CYLINDRE GROUPE (ENS.)	1	1	1	1		
2	6FM–15100–01	CRANKCASE ASSY CARTER DE MOTEUR COMPLET	1	1	1	1		
3	99530–08012	.PIN, DOWEL .GOUJON, D'ASSEMBLAGE	3	3	3	3		
4	90119–08093	BOLT, WITH WASHER BOULON, AVEC RONDELLE	4	4	4	4		
5	97513–06540	BOLT, WITH WASHER VIS HEXAGONAL AVC RONDELLE	6	6	6	6		
6	6FM–11351–01	GASKET, CYLINDER JOINT, D'EMBASE	1	1	1	1		
7	6FM–11119–00	HANGER, ENGINE ANNEAU, LEVAGE	1	1	1	1		
8	90105–06M07	BOLT, FLANGE BOULON, A COLLERETTE	2	2	2	2		
9	6G8–11325–00	ANODE ANODE	1	1	1	1		
10	98980–05025	SCREW, BIND VIS, DE PRESSION	1	1	1	1		
11	6G8–11197–B0	PLUG, BLIND PLOT, BORGNE	1	1	1	1		
12	93210–13M63	O-RING JOINT TORIQUE	1	1	1	1		
13	6FM–12411–00	THERMOSTAT THERMOSTAT	1	1	1	1		
14	6FM–12412–00	.SEAL, THERMOSTAT .JOINT, THERMOSTAT	1	1	1	1		
15	6FM–12413–00–1S	COVER, THERMOSTAT COUVERCLE, THERMOSTAT	1	1	1	1		
16	6FM–12414–00	GASKET, COVER JOINT, COUVERCLE	1	1	1	1		
17	90119–06MA3	BOLT, WITH WASHER BOULON, AVEC RONDELLE	3	3	3	3		
18	6G8–11325–00	ANODE ANODE	1	1	1	1		
19	98980–05025	SCREW, BIND VIS, DE PRESSION	1	1	1	1		
20	90465–08M83	CLAMP BRIDE	1	1	1	1		
21	95D95–06016	BOLT, FLANGE DEEP RECESS BOULON FIXATION	1	1	1	1		
22	5GH–13440–90	ELEMENT ASSY, OIL CLEANER ELEMENT, FILTRE A HUILE	1	1	1	1		
23	6C5–12858–A0	BOLT, UNION BOULON, RACCORD	1	1	1	1		

FIG. 4 CRANKSHAFT & PISTON — VILEBREQUIN & PISTON

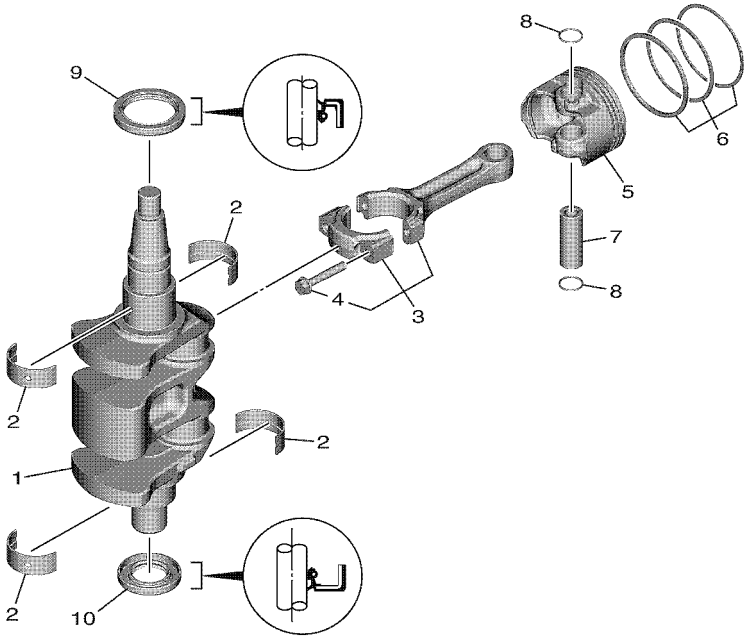

6FM1100DR040

REF. NO.	PART NO. N° PIECES	DESCRIPTION DESCRIPTION	MHB	WHB	EB	PB		REMARKS REMARQUES
1	6FM–11411–00	CRANKSHAFT VILEBREQUIN COMPLET	1	1	1	1		
2	6AH–11416–00	PLANE BEARING, CRANKSHAFT 1 COUSSINET DE VILEBREQUIN 1	4	4	4	4		UR BROWN UR BROWN
	6AH–11416–10	PLANE BEARING, CRANKSHAFT 1 COUSSINET DE VILEBREQUIN 1	4	4	4	4		UR BLACK UR BLACK
	6AH–11416–20	PLANE BEARING, CRANKSHAFT 1 COUSSINET DE VILEBREQUIN 1	4	4	4	4		UR BLUE UR BLUE
3	6FM–11650–01	CONNECTING ROD ASSY BIELLE COMPLETTE	2	2	2	2		
4	6AH–11654–00	.BOLT, CONNECTING ROD .BOULON, BIELLE	2	2	2	2		
5	6FM–11631–00	PISTON (STD) PISTON (STD)	2	2	2	2		
	6FM–11635–00	PISTON (0.25MM O/S) PISTON (0.25MM O/S)	2	2	2	2		AP AP
	6FM–11636–00	PISTON (0.50MM O/S) PISTON (0.50MM O/S)	2	2	2	2		AP AP
6	67C–11603–01	PISTON RING SET (STD) JEU DE SEGMENTS (STD)	2	2	2	2		
	67C–11604–01	PISTON RING SET (0.25MM O/S) JEU DE SEGMENTS (0.25MM O/S)	2	2	2	2		AP AP
	67C–11605–01	PISTON RING SET (0.50MM O/S) JEU DE SEGMENTS (0.50MM O/S)	2	2	2	2		AP AP
7	6FM–11633–00	PIN, PISTON AXE, PISTON	2	2	2	2		
8	93450–17129	CIRCLIP CIRCLIP	4	4	4	4		
9	93102–37004	OIL SEAL JOINT SPY	1	1	1	1		
10	93102–25014	OIL SEAL JOINT SPY	1	1	1	1		

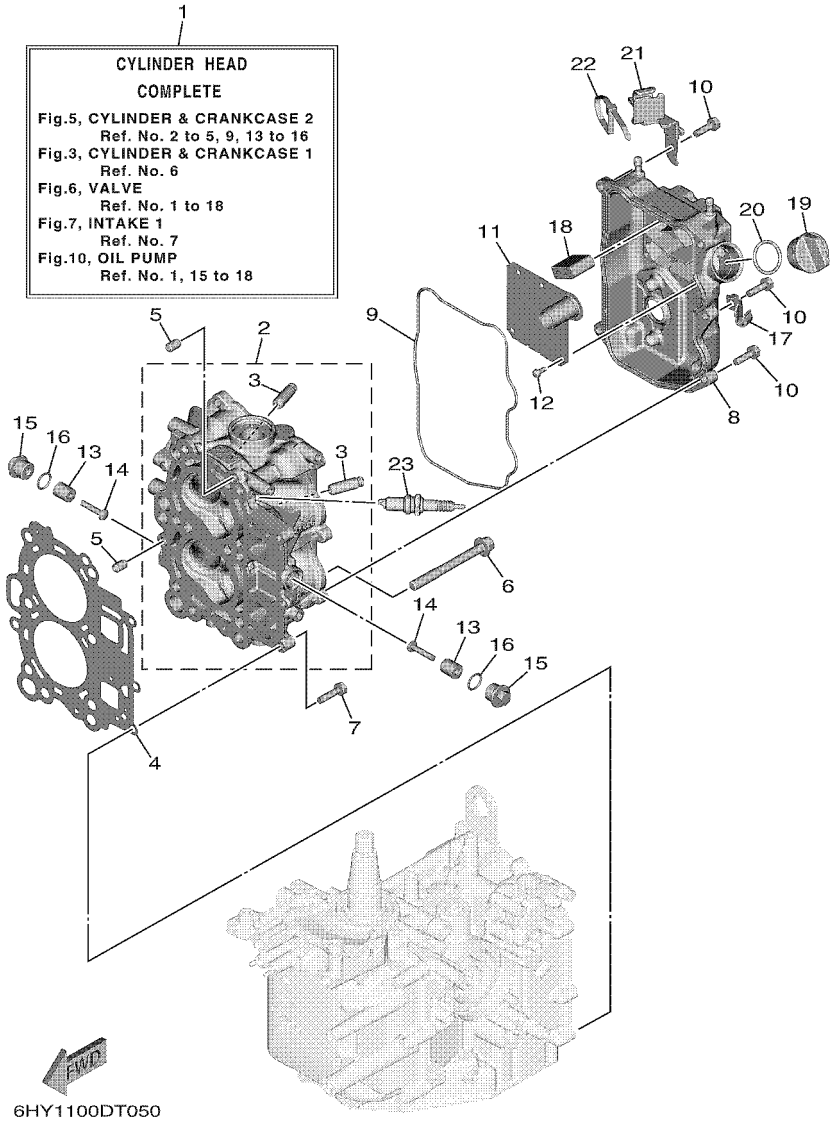

FIG. 5 CYLINDER & CRANKCASE 2 — CYLINDRE & CARTER 2

REF. NO.	PART NO. N° PIECES	DESCRIPTION DESCRIPTION	MHB	WHB	EB	PB		REMARKS REMARQUES
1	6HY–W009A–11–1S	CYLINDER HEAD COMPLETE CULASSE (ENS.)	1	1	1	1		
2	6FM–11111–10–1S	HEAD, CYLINDER 1 CULASSE, 1	1	1	1	1		
3	6AH–11133–10	.GUIDE, VALVE 1 .GUIDE, SOUPAPE 1	4	4	4	4		
4	6FM–11181–00	GASKET, CYLINDER HEAD 1 JOINT, DE CULASSE 1	1	1	1	1		
5	99530–08012	PIN, DOWEL GOUJON, D'ASSEMBLAGE	2	2	2	2		
6	90105–09010	BOLT, FLANGE BOULON, A COLLERETTE	6	6	6	6		
7	90119–06MA3	BOLT, WITH WASHER BOULON, AVEC RONDELLE	3	3	3	3		
8	6FM–11191–00	COVER, CYLINDER HEAD 1 COUVERCLE, CULASSE 1	1	1	1	1		
9	6FM–11356–00	SEAL, CYLINDER 2 JOINT, SPY CYLINDRE	1	1	1	1		
10	90105–06M07	BOLT, FLANGE BOULON, A COLLERETTE	5	5	5	5		
11	6FM–11168–00	COVER, BREATHER COUVERCLE, RENIFLARD	1	1	1	1		
12	97607–04210	SCREW, WITH WASHER VIS, AVEC RONDELLE	5	5	5	5		
13	6G8–11325–00	ANODE ANODE	2	2	2	2		
14	98980–05025	SCREW, BIND VIS, DE PRESSION	2	2	2	2		
15	6G8–11197–B0	PLUG, BLIND PLOT, BORGNE	2	2	2	2		
16	93210–13M63	O-RING JOINT TORIQUE	2	2	2	2		
17	90465–08059	CLAMP BRIDE	1	1	1	1		
18	6HY–15407–00	ELEMENT 1 ELEMENT 1	1	1	1	1		
19	6G8–15363–00	PLUG, OIL PLOT, HUILE	1	1	1	1		
20	93210–24M79	O-RING JOINT TORIQUE	1	1	1	1		
21	6FM–2475H–00	BRACKET, SEAT LEVER 1 SUPPORT, LEVIER DE SELLE 1	1	1	1	1		
22	90465–13M18	CLAMP BRIDE	1	1	1	1		
23	94702–00418	PLUG, SPARK (NGK DPR6EB-9) BOUGIE D,ALLUMAGE (NGK DPR6EB-	2	2	2	2		

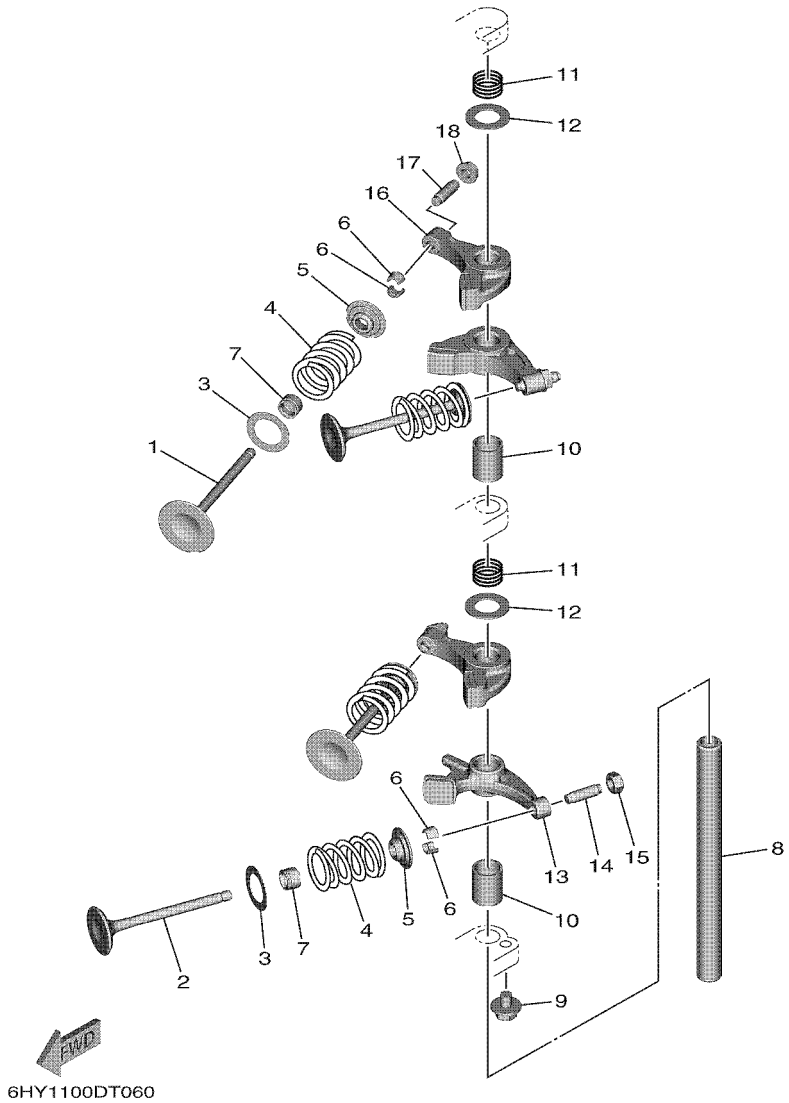

FIG. 6 VALVE — SOUPAPE

REF. NO.	PART NO. N° PIECES	DESCRIPTION DESCRIPTION	MHB	WHB	EB	PB		REMARKS REMARQUES
1	6FM–12111–00	VALVE, INTAKE SOUPAPE, ADMISSION	2	2	2	2		
2	6FM–12121–00	VALVE, EXHAUST SOUPAPE, ECHAPPEMENT	2	2	2	2		
3	62Y–12116–00	SEAT, VALVE SPRING SIEGE, RESSORT DE SOUPAPE	4	4	4	4		
4	3YF–12113–00	SPRING, VALVE INNER RESSORT DE SOUPAPE, INTERNE	4	4	4	4		
5	30X–12117–00	RETAINER, VALVE SPRING BUTEE DE RESSORT DE SOUPAPE	4	4	4	4		
6	30X–12118–00	LOCK, VALVE SPRING RETAINER FRAISE, SOUPAPE	8	8	8	8		
7	51Y–12119–00	SEAL, VALVE STEM JOINT, QUEUE DE SOUPAPE	4	4	4	4		
8	66M–12146–00	SHAFT, ROCKER AXE, CULBUTEUR	1	1	1	1		
9	90119–06054	BOLT, WITH WASHER BOULON, AVEC RONDELLE	1	1	1	1		
10	90387–13006	COLLAR COLLERETTE	2	2	2	2		
11	90501–120A5	SPRING, COMPRESSION RESSORT, COMPRESSION	2	2	2	2		
12	90201–131M4	WASHER, PLATE RONDELLE, PLATE	2	2	2	2		
13	6AH–12151–01	ARM, VALVE ROCKER CULBUTEUR	1	1	1	1		
14	64J–12159–00	SCREW, VALVE ADJUSTING VIS, REGLAGE DE SOUPAPE	1	1	1	1		
15	62Y–12158–00	NUT, LOCK CONTRE-ECROU	1	1	1	1		
16	6FM–12151–00	ARM, VALVE ROCKER CULBUTEUR	3	3	3	3		
17	6C5–12159–00	SCREW, VALVE ADJUSTING VIS, REGLAGE DE SOUPAPE	3	3	3	3		
18	6C5–12158–00	NUT, LOCK CONTRE-ECROU	3	3	3	3		

FIG. 7 INTAKE 1 — ADMISSION 1

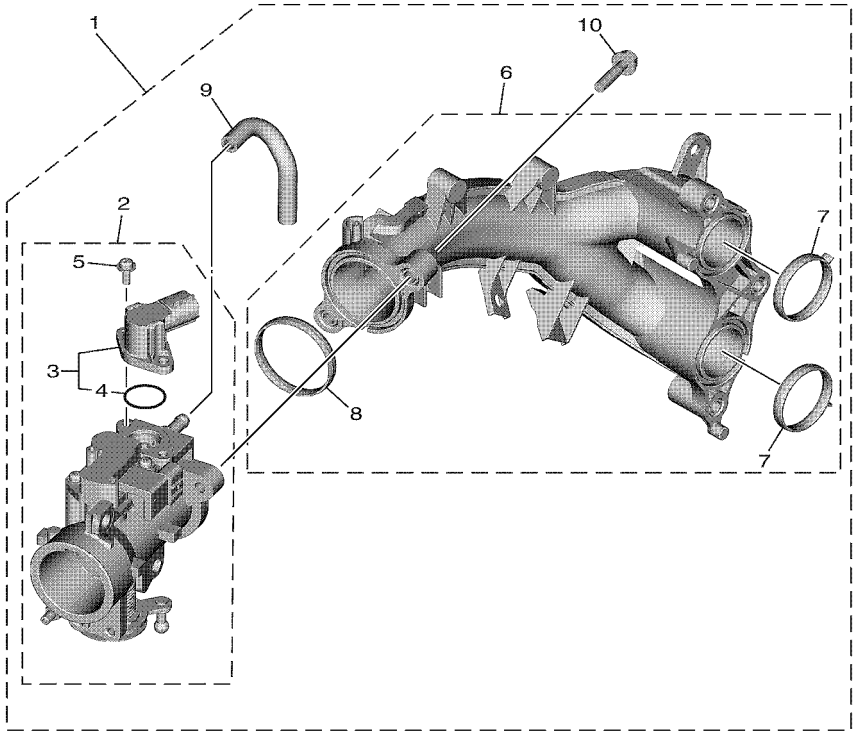

6FM1100DR070

REF. NO.	PART NO. N° PIECES	DESCRIPTION DESCRIPTION	MHB	WHB	EB	PB		REMARKS REMARQUES
1	6FM–14200–02	INTAKE ASSY ADMISSION (ENS.)	1	1	1	1		
2	6FM–13750–02	.THROTTLE BODY ASSY .CARTER D'ACCELERATEUR COMPLET	1	1	1	1		
3	6FM–1410H–01	..SOLENOID VALVE ..SOLENOID SOUPAPE	1	1	1	1		
4	1ST–1416A–00	...O-RING ...JOINT TORIQUE	1	1	1	1		
5	68V–14216–00	..SCREW ..VIS	2	2	2	2		
6	6FM–13641–00	.MANIFOLD, INTAKE 1 .TUBULURE, ADMISSION 1	1	1	1	1		
7	6FM–13645–00	..GASKET, MANIFOLD 1 ..JOINT, TUBULURE 1	2	2	2	2		
8	6FM–13646–00	..GASKET, MANIFOLD 2 ..JOINT, TUBULURE 2	1	1	1	1		
9	6FM–13543–00	.HOSE, AIR .DURITE, A AIR	1	1	1	1		
10	6P2–14446–00	.BOLT .BOULON	2	2	2	2		

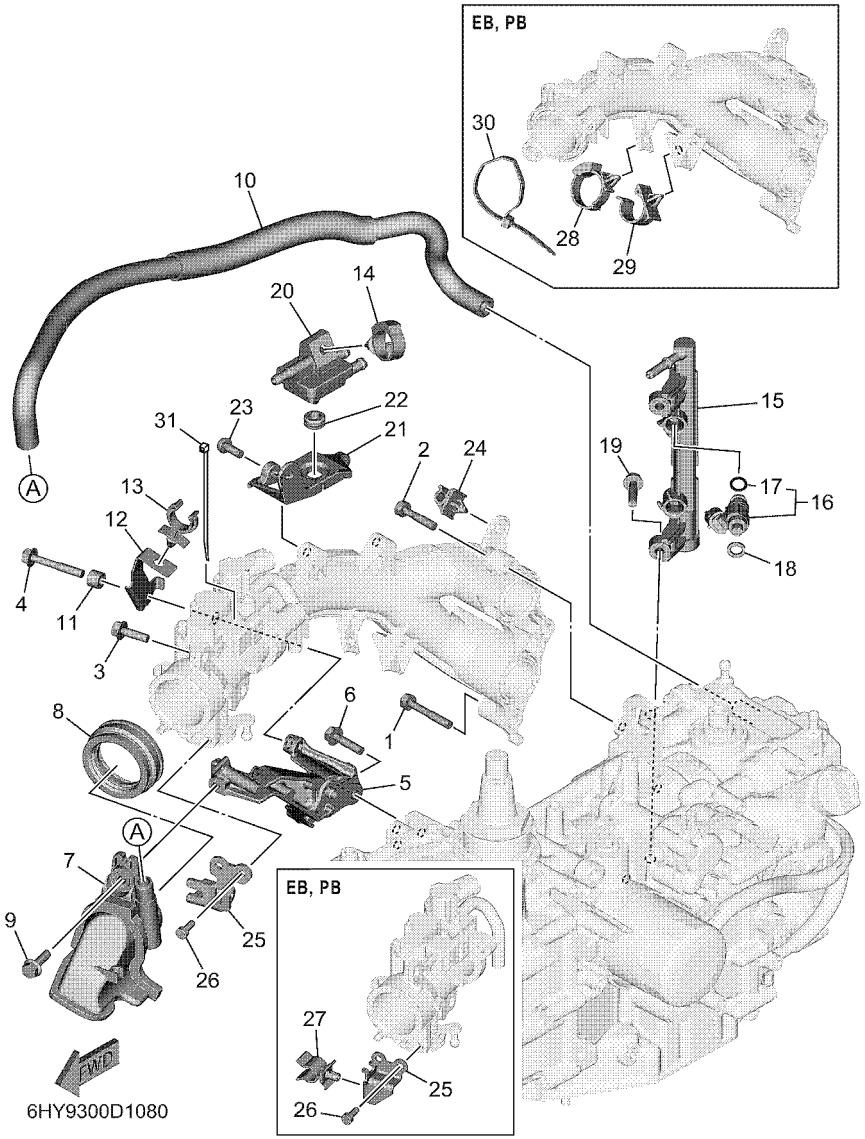

FIG. 8 INTAKE 2 — ADMISSION 2

REF. NO.	PART NO. N° PIECES	DESCRIPTION DESCRIPTION	MHB	WHB	EB	PB		REMARKS REMARQUES
1	90119–06MA6	BOLT, WITH WASHER BOULON, AVEC RONDELLE	1	1	1	1		
2	90119–06MA4	BOLT, WITH WASHER BOULON, AVEC RONDELLE	2	2	2	2		
3	95D95–06020	BOLT, FLANGE DEEP RECESS BOULON FIXATION	2	2	2	2		
4	95D95–06040	BOLT, FLANGE DEEP RECESS BOULON FIXATION	1	1	1	1		
5	6FM–13152–01	STAY 2 SUPPORT2	1	1	1	1		
6	95D95–06025	BOLT, FLANGE DEEP RECESS BOULON FIXATION	3	3	3	3		
7	6FM–14440–10	SILENCER ASSY, INTAKE SIENCIEUX D'ADMISSION	1	1	1	1		
8	6FM–1441J–00	PIPE, SILENCER DURITE, DE SILENCIEUX	1	1	1	1		
9	95D95–06020	BOLT, FLANGE DEEP RECESS BOULON FIXATION	1	1	1	1		
10	6FM–15373–00	PIPE, BREATHER DURITE DE RENIFLARD	1	1	1	1		
11	90387–06318	COLLAR COLLERETTE	1	1	1	1		
12	6FM–13782–00	STAY SUPPORT	1	1	1	1		
13	90464–16240	CLAMP BRIDE	1	1	1	1		
14	90464–20181	CLAMP BRIDE	1	1	1	1		
15	6FM–13161–01	PIPE, DELIVERY 1 DURITE REFOULEMENT 1	1	1	1	1		
16	6FM–13761–10	INJECTOR INJECTEUR	2	2	2	2		
17	68V–1416A–00	.O-RING .JOINT TORIQUE	1	1	1	1		
18	6FM–13766–00	RUBBER, INJECTOR RONDELLE CAOUTCHOUC	2	2	2	2		
19	95D95–06025	BOLT, FLANGE DEEP RECESS BOULON FIXATION	2	2	2	2		
20	6FM–2417F–00	SEPARATOR SEPARATEUR	1	1	1	1		
21	6FM–2419F–00	BRACKET, CANISTOR SUPPORT	1	1	1	1		
22	90480–13M24	GROMMET PASSE-FIL	1	1	1	1		
23	97980–06216	SCREW, WITH WASHER VIS, AVEC RONDELLE	2	2	2	2		
24	90464–07259	CLAMP BRIDE	1	1	1	1		
25	6FM–14497–00	STAY, THROTTLE WIRE SUPPORT DE BOISSEAU	1	1				
	6FM–82389–00	PLATE 2 PLAQUETTE 2			1	1		
26	91380–05012	BOLT BOULON	2	2	2	2		

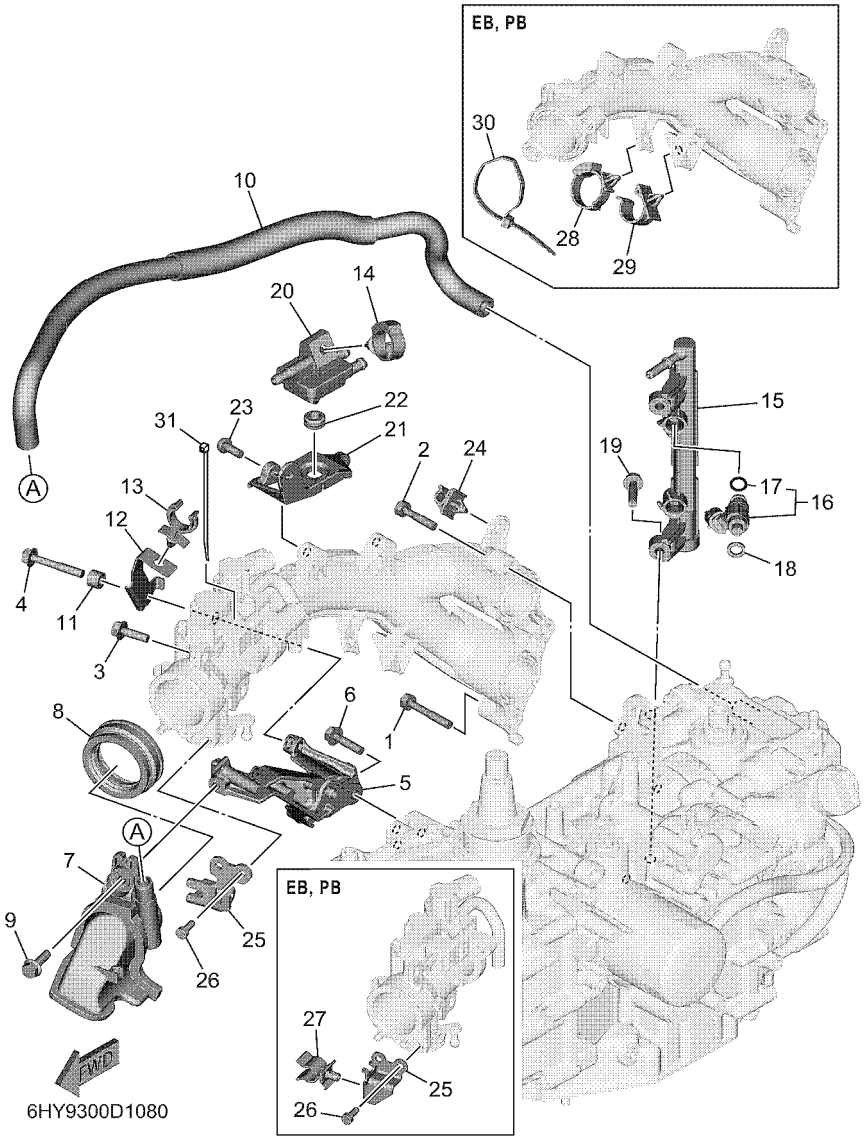

FIG. 8 INTAKE 2 — ADMISSION 2

REF. NO.	PART NO. N° PIECES	DESCRIPTION DESCRIPTION	MHB	WHB	EB	PB		REMARKS REMARQUES
27	90464–12015	CLAMP BRIDE			1	1		
28	90464–12183	CLAMP BRIDE			1	1		
29	90464–20006	CLAMP BRIDE			1	1		
30	90465–15011	CLAMP BRIDE			1	1		
31	90465–11M59	CLAMP BRIDE	1	1	1	1		

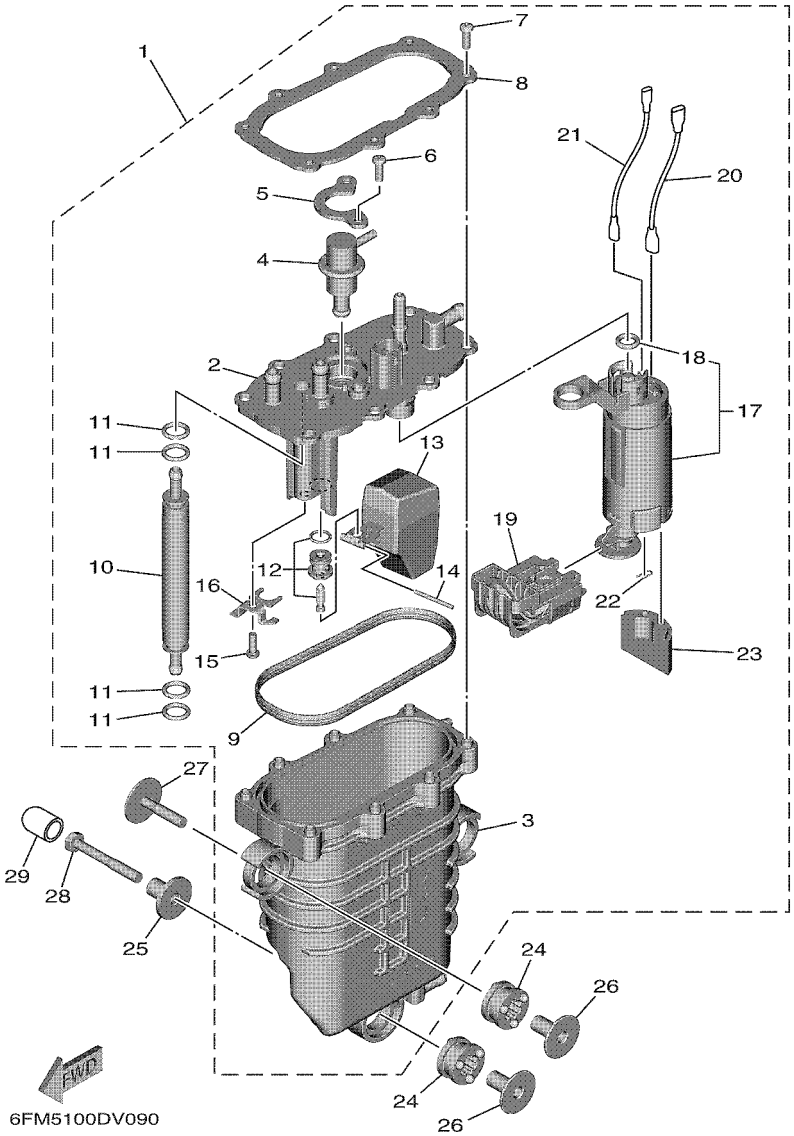

FIG. 9 FUEL INJECTION PUMP — FUEL INJECTION PUMP

REF. NO.	PART NO. N° PIECES	DESCRIPTION DESCRIPTION	MHB	WHB	EB	PB		REMARKS REMARQUES
1	6FM–14180–02	FLOAT CHAMBER ASSY CUVE DE FLOTTEUR	1	1	1	1		
2	6FM–14182–00	.COVER, FLOAT CHAMBER .COUVERCLE, CUVE DE FLOTTEUR	1	1	1	1		
3	6FM–14181–01	.BODY, FLOAT CHAMBER 1 .CORPS, CUVE DE FLOTTEUR 1	1	1	1	1		
4	6FM–13906–00	.REGULATOR, PRESSURE .REGULATEUR DE PRESSION	1	1	1	1		
5	6FM–14146–00	.PLATE .PLAQUE	1	1	1	1		
6	6FM–14565–00	.SCREW .VIS	2	2	2	2		
7	6FM–14567–00	.SCREW .VIS	8	8	8	8		
8	6FM–14243–00	.PLATE .PLAQUE	1	1	1	1		
9	6FM–14984–00	.GASKET, FLOAT CHAMBER .JOINT, CUVE DE FLOTTEUR	1	1	1	1		
10	6FM–21841–00	.COOLER .RADIATEUR	1	1	1	1		
11	6FM–14562–00	.O-RING .JOINT TORIQUE	4	4	4	4		
12	6FM–14546–00	.VALVE, NEEDLE .POINTEAU	1	1	1	1		
13	68V–14985–00	.FLOAT .FLOTTEUR	1	1	1	1		
14	6FM–14386–00	.PIN, FLOAT .AXE, FLOTTEUR	1	1	1	1		
15	6FM–14565–00	.SCREW .VIS	1	1	1	1		
16	6FM–14674–00	.VALVE, PLATE .CLAPET, PLAQUE	1	1	1	1		
17	6FM–13910–00	.FUEL PUMP ASSY .POMPE A ESSENCE COMPLET	1	1	1	1		
18	6FM–14561–00	..O-RING ..JOINT TORIQUE	1	1	1	1		
19	6FM–13915–00	.FILTER .FILTRE	1	1	1	1		
20	6FM–1469M–00	.WIRE 1 .FIL 1	1	1	1	1		
21	6FM–1469N–00	.WIRE 2 .FIL 2	1	1	1	1		
22	6FM–14137–00	.CLIP .JONC	1	1	1	1		
23	6FM–13781–00	.DAMPER, PUMP .AMORTISSEUR, POMPE	1	1	1	1		
24	6FM–13593–00	DAMPER AMORTISSEUR	3	3	3	3		
25	90387–06M69	COLLAR COLLERETTE	1	1	1	1		
26	90387–06176	COLLAR COLLERETTE	3	3	3	3		
27	90119–06291	BOLT, WITH WASHER BOULON, AVEC RONDELLE	2	2	2	2		

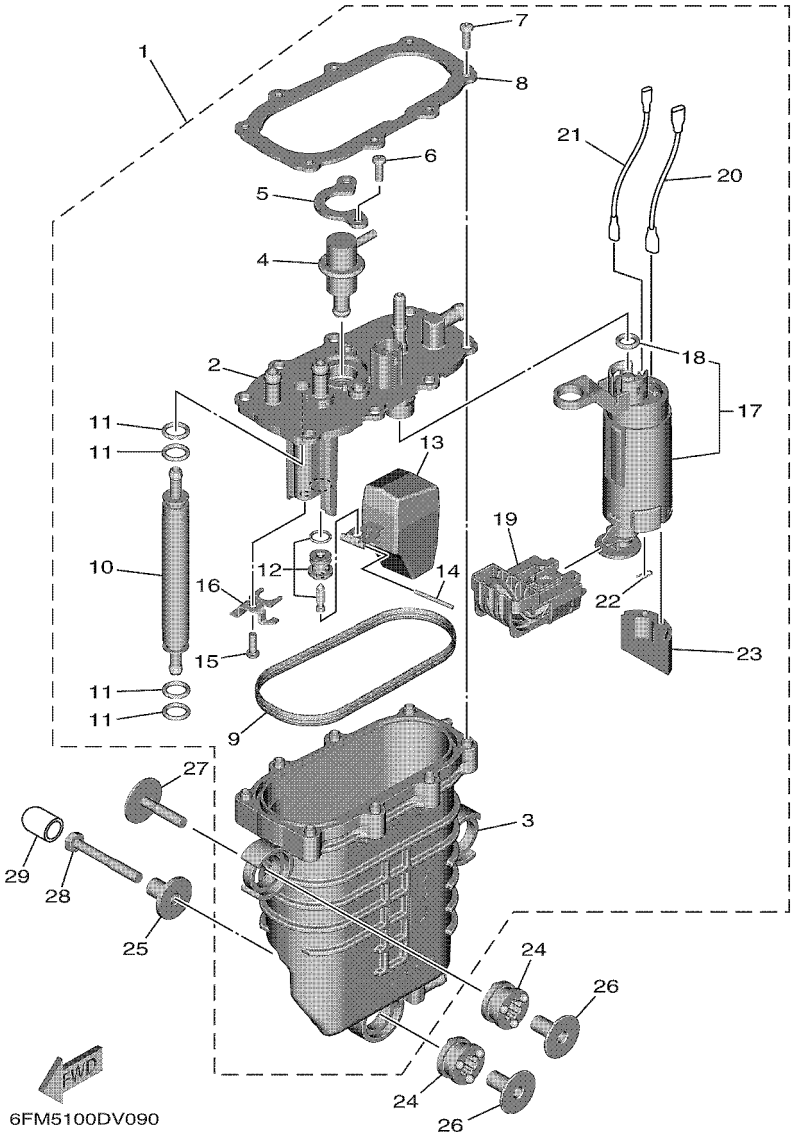

FIG. 9 FUEL INJECTION PUMP — FUEL INJECTION PUMP

REF. NO.	PART NO. N° PIECES	DESCRIPTION DESCRIPTION	MHB	WHB	EB	PB		REMARKS REMARQUES
28	90101–06032	BOLT BOULON	1	1	1	1		
29	67F–13448–00	CAP CAPUCHON	1	1	1	1		

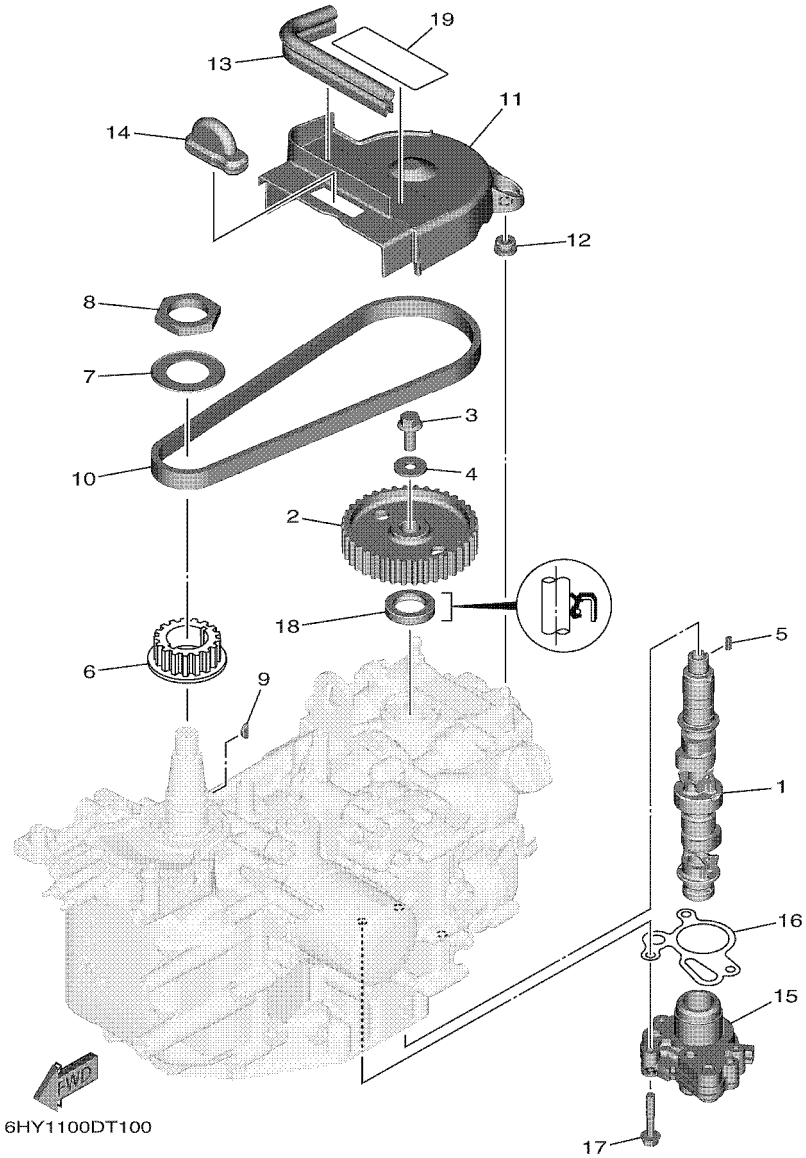

FIG. 10 OIL PUMP — POMPE A HUILE

REF. NO.	PART NO. N° PIECES	DESCRIPTION DESCRIPTION	MHB	WHB	EB	PB		REMARKS REMARQUES
1	6HY–12170–01	CAMSHAFT ASSY 1 ENS ARBRE A CAMES 1	1	1	1	1		
2	6AH–11537–01	GEAR, DRIVEN PIGNON SECONDAIRE	1	1	1	1		
3	90105–081A7	BOLT, FLANGE BOULON, A COLLERETTE	1	1	1	1		
4	90201–08784	WASHER, PLATE RONDELLE, PLATE	1	1	1	1		
5	90282–05012	KEY, STRAIGHT CLAVETTE, DROITE	1	1	1	1		
6	6AH–11536–00	GEAR, DRIVE ENGRENAGE, MENANT	1	1	1	1		
7	6AH–11557–00	WASHER 1 RONDELLE 1	1	1	1	1		
8	90170–30009	NUT ECROU	1	1	1	1		
9	90280–03M01	KEY, WOODRUFF CLAVETTE, DEMI-LUNE	1	1	1	1		
10	6FM–46241–00	BELT COURROIE	1	1	1	1		
11	6FM–46297–01	COVER, DUST COUVERCLE, POUSSIERE	1	1	1	1		
12	90480–10627	GROMMET PASSE-FIL	2	2	2	2		
13	6FM–42617–00	DAMPER, FORM BOURRELET, CAOUTCHOUC	1	1	1	1		
14	6FM–81639–01	COVER COUVERCLE	1	1	1	1		
15	6AH–13300–00	OIL PUMP ASSY POMPE A HUILE COMPLETE	1	1	1	1		
16	6AH–13329–11	GASKET, PUMP COVER JOINT, COUVERCLE DE POMPE	1	1	1	1		
17	90105–06035	BOLT, FLANGE BOULON, A COLLERETTE	3	3	3	3		
18	93102–22010	OIL SEAL JOINT SPY	1	1	1	1		
19	6FM–13437–62	MARK, CAUTION MAKER	1	1	1	1		

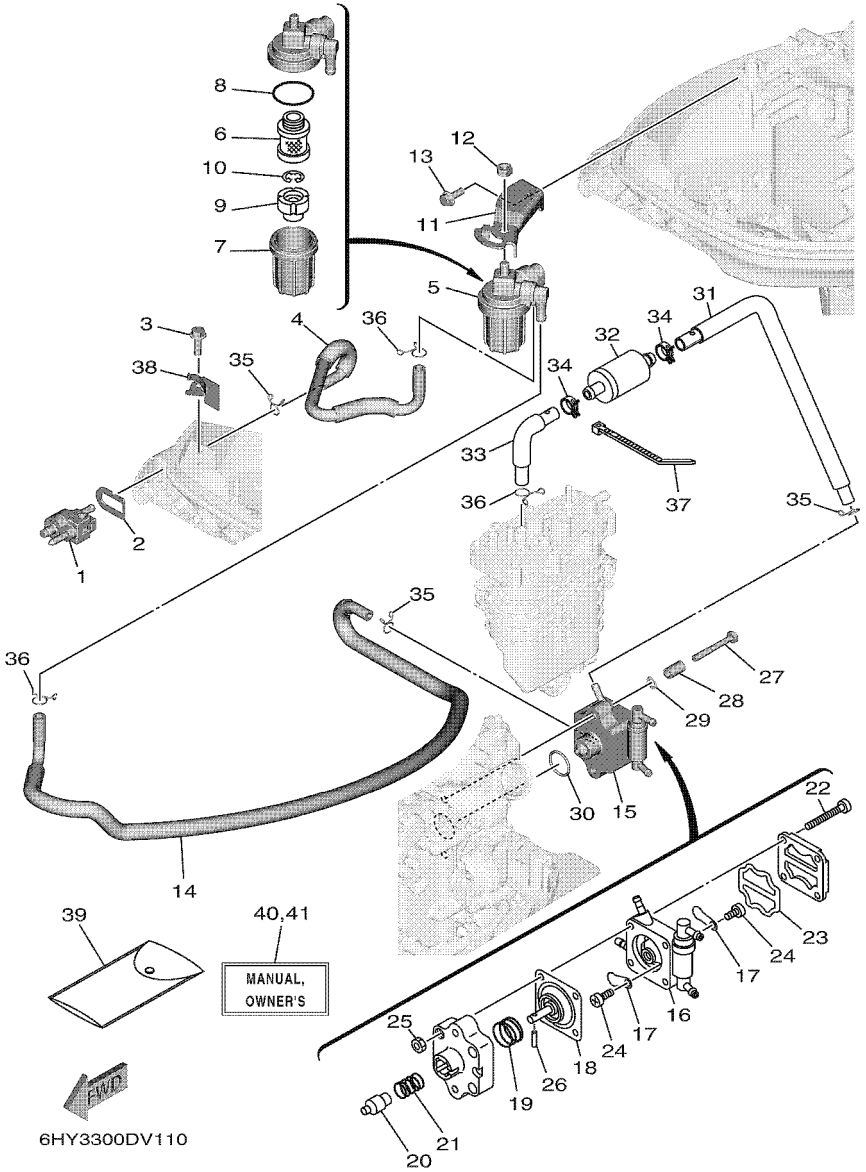

FIG. 11 FUEL 1 — CARBURANT 1

REF. NO.	PART NO. N° PIECES	DESCRIPTION DESCRIPTION	MHB	WHB	EB	PB		REMARKS REMARQUES
1	6G1–24304–11	FUEL PIPE JOINT COMP. 1 DURITE RACCORDEMT. A ESSENCE	1	1	1	1		
2	61N–24329–01	SEAL JOINT	1	1	1	1		
3	95D95–06020	BOLT, FLANGE DEEP RECESS BOULON FIXATION	1	1	1	1		
4	6FM–24311–00	PIPE, FUEL 1 DURITE A ESSENCE	1	1	1	1		
5	6FM–24560–00	FILTER ASSY ENS FILTRE	1	1	1	1		
6	6D8–24563–00	.ELEMENT, FILTER .ELEMENT, FILTRE	1	1	1	1		
7	6FM–24521–00	.CUP, FILTER .CUVETTE, FILTRE	1	1	1	1		
8	6D8–24564–00	.GASKET .JOINT	1	1	1	1		
9	6D8–24469–00	.FLOAT, WATER LEVEL .FLOTTEUR	1	1	1	1		
10	6D8–24519–00	.CLIP .JONC	1	1	1	1		
11	6FM–24566–00	BRACKET, FILTER SUPPORT, FILTRE	1	1	1	1		
12	95380–08600	NUT ECROU	1	1	1	1		
13	95D75–06016	BOLT, FLANGE DEEP RECESS BOULON FIXATION	1	1	1	1		
14	6FM–24312–00	PIPE 2 DURITE 2	1	1	1	1		
15	6AH–24410–71	FUEL PUMP ASSY POMPE A ESSENCE	1	1	1	1		
16	6AH–24413–70	.BODY 2 .CORPS 2	1	1	1	1		
17	6A0–24421–01	.VALVE, CHECK .SOUPAPE, RETENUE	2	2	2	2		
18	66M–24411–12	.DIAPHRAGM .DIAPHRAGME	1	1	1	1		
19	66M–24423–00	.SPRING, DIAPHRAGM .RESSORT, DIAPHRAGME	1	1	1	1		
20	66M–13131–10	.PLUNGER .PLONGEUR	1	1	1	1		
21	66M–24454–00	.SPRING .RESSORT	1	1	1	1		
22	66M–24444–00	.SCREW .VIS	4	4	4	4		
23	66M–24471–02	.DIAPHRAGM .DIAPHRAGME	1	1	1	1		
24	6E7–14325–00	.SCREW, PAN HEAD .VIS TETE CONIQUE	2	2	2	2		
25	95380–04600	.NUT .ECROU	4	4	4	4		
26	66M–24374–00	.PIN .GOUPILLE	1	1	1	1		
27	90101–06032	BOLT BOULON	2	2	2	2		

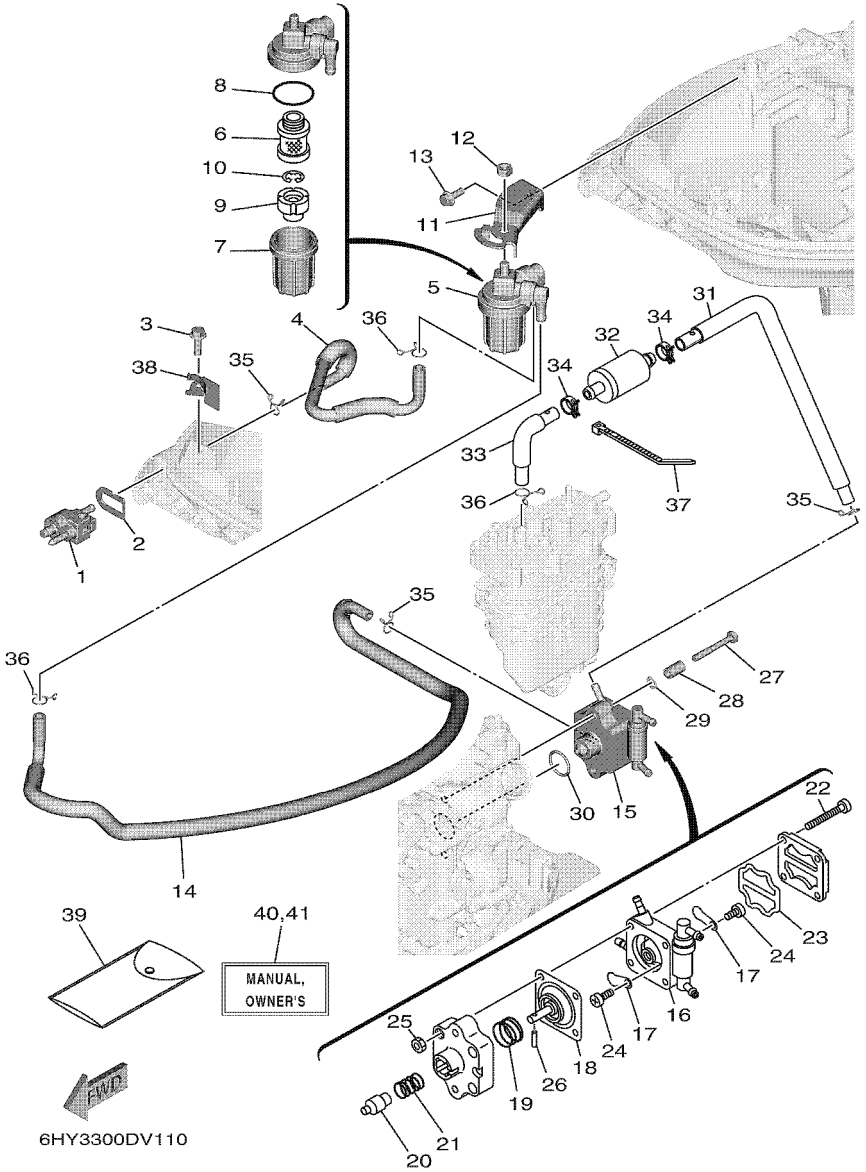

FIG. 11 FUEL 1 — CARBURANT 1

REF. NO.	PART NO. N° PIECES	DESCRIPTION DESCRIPTION	MHB	WHB	EB	PB		REMARKS REMARQUES
28	90387–06320	COLLAR COLLERETTE	2	2	2	2		
29	90201–06016	WASHER, PLATE RONDELLE, PLATE	2	2	2	2		
30	93210–20M65	O-RING JOINT TORIQUE	1	1	1	1		
31	6FM–24313–20	PIPE 3 DURITE 3	1	1	1	1		
32	6C5–24251–01	STRAINER 1 FILTRE 1	1	1	1	1		
33	6FM–24315–00	PIPE 5 DURITE 5	1	1	1	1		
34	90467–120A7	CLIP JONC	2	2	2	2		
35	90467–09M17	CLIP JONC	3	3	3	3		
36	90467–10M04	CLIP JONC	3	3	3	3		
37	90465–13M18	CLAMP BRIDE	1	1	1	1		
38	6FM–24396–00	PLATE PLAQUE	1	1	1	1		
39	62Y–28100–01	TOOL KIT TROUSSE A OUTILS	1	1	1	1		AP AP
40	6HY–28199–76–E0	MANUAL,OWNER'S MANUEL D'UTILISATION	1	1	1	1		UR (E) UR (E)
	6HY–28199–76–F0	MANUAL,OWNER'S MANUEL D'UTILISATION	1	1	1	1		UR (F) UR (F)
	6HY–28199–76–S0	MANUAL,OWNER'S MANUEL D'UTILISATION	1	1	1	1		UR (ES) UR (ES)
	6HY–28199–76–G0	MANUAL,OWNER'S MANUEL D'UTILISATION	1	1	1	1		UR (D) UR (D)
	6HY–28199–76–D0	MANUAL,OWNER'S MANUEL D'UTILISATION	1	1	1	1		UR (NL) UR (NL)
	6HY–28199–76–H0	MANUAL,OWNER'S MANUEL D'UTILISATION	1	1	1	1		UR (I) UR (I)
41	6HY–28199–86–K0	MANUAL,OWNER'S MANUEL D'UTILISATION	1	1	1	1		UR (DK) UR (DK)
	6HY–28199–86–R0	MANUAL,OWNER'S MANUEL D'UTILISATION	1	1	1	1		UR (GR) UR (GR)
	6HY–28199–86–P0	MANUAL,OWNER'S MANUEL D'UTILISATION	1	1	1	1		UR (P) UR (P)
	6HY–28199–86–N0	MANUAL,OWNER'S MANUEL D'UTILISATION	1	1	1	1		UR (N) UR (N)
	6HY–28199–86–M0	MANUAL,OWNER'S MANUEL D'UTILISATION	1	1	1	1		UR (S) UR (S)
	6HY–28199–86–L0	MANUAL,OWNER'S MANUEL D'UTILISATION	1	1	1	1		UR (SF) UR (SF)

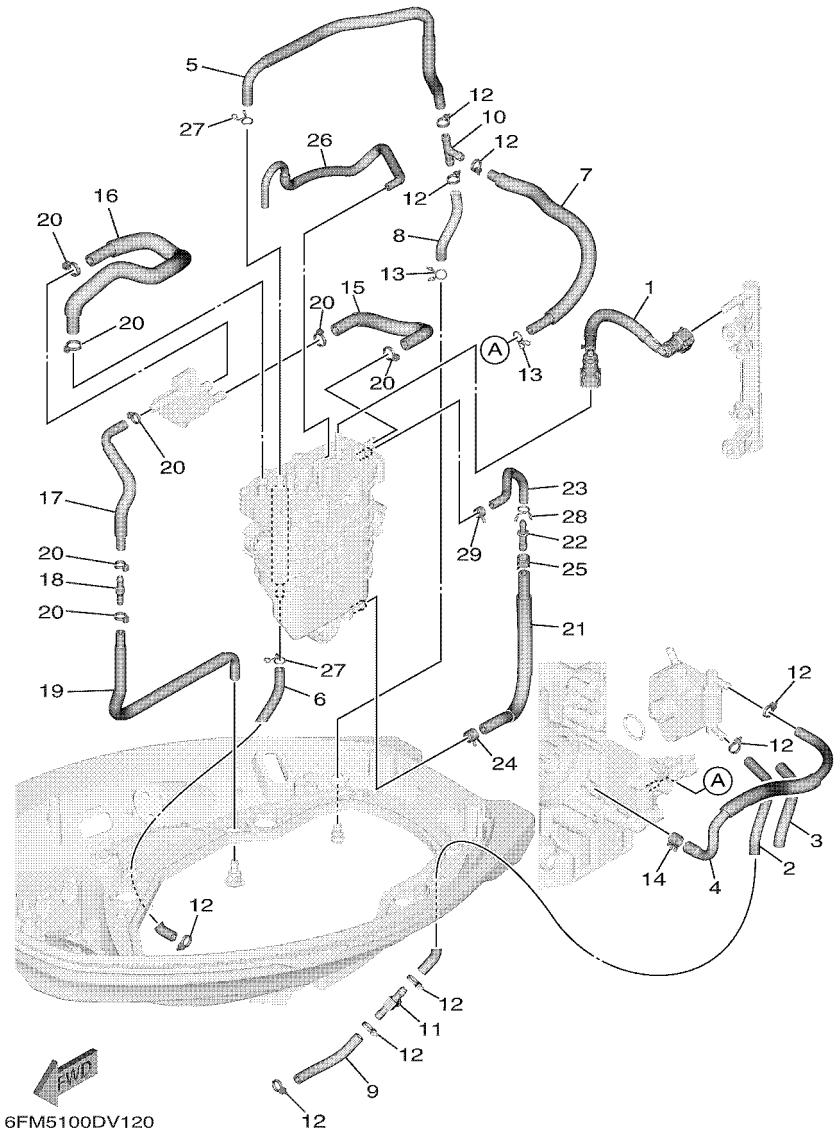

FIG. 12 FUEL 2 — CARBURANT 2

REF. NO.	PART NO. N° PIECES	DESCRIPTION DESCRIPTION	MHB	WHB	EB	PB		REMARKS REMARQUES
1	6FM–24310–01	FUEL PIPE ASSY DURITE A ESSENCE	1	1	1	1		
2	90445–09091	HOSE (L135) DURITE (L135)	1	1	1	1		
3	6FM–12498–00	PROTECTOR PROTECTEUR	1	1	1	1		
4	6FM–12482–01	PIPE 2 DURITE 2	1	1	1	1		
5	6FM–12483–00	PIPE 3 DURITE 3	1	1	1	1		
6	6FM–12484–00	PIPE 4 DURITE 4	1	1	1	1		
7	6FM–12485–01	PIPE 5 DURITE 5	1	1	1	1		
8	90445–09063	HOSE (L80) DURITE (L80)	1	1	1	1		
9	90445–09012	HOSE (L70) DURITE (L70)	1	1	1	1		
10	688–24378–00	PIPE, JOINT 3 DURITE RACCORDEMENT 3	1	1	1	1		
11	6C5–24378–00	PIPE, JOINT 3 DURITE RACCORDEMENT 3	1	1	1	1		
12	90465–11M10	CLAMP BRIDE	9	9	9	9		
13	90467–08M10	CLIP JONC	2	2	2	2		
14	90467–110A1	CLIP JONC	1	1	1	1		
15	6FM–1475A–00	PIPE 1 DURITE 1	1	1	1	1		
16	6FM–1475E–01	PIPE 2 DURITE	1	1	1	1		
17	6FM–1475F–00	PIPE 3 DURITE 3	1	1	1	1		
18	6E5–21744–00	BREATHER RENIFLARD	1	1	1	1		
19	6FM–1475G–00	PIPE 4 DURITE 4	1	1	1	1		
20	90465–11M10	CLAMP BRIDE	7	7	7	7		
21	6FM–1243K–00	PIPE, DRAIN TUBE, VIDANGE	1	1	1	1		
22	6FM–14191–00	PLUG, DRAIN PLOT, VIDANGE	1	1	1	1		
23	6FM–1443G–00	PIPE, DRAIN 2 TUBE, VIDANGE 2	1	1	1	1		
24	90467–110A1	CLIP JONC	1	1	1	1		
25	90467–090A4	CLIP JONC	1	1	1	1		
26	6FM–13542–00	HOSE, VACUUM SENSING 1 DURITE, SOUS VIDE DETECTION 1	1	1	1	1		
27	90467–08M10	CLIP JONC	2	2	2	2		

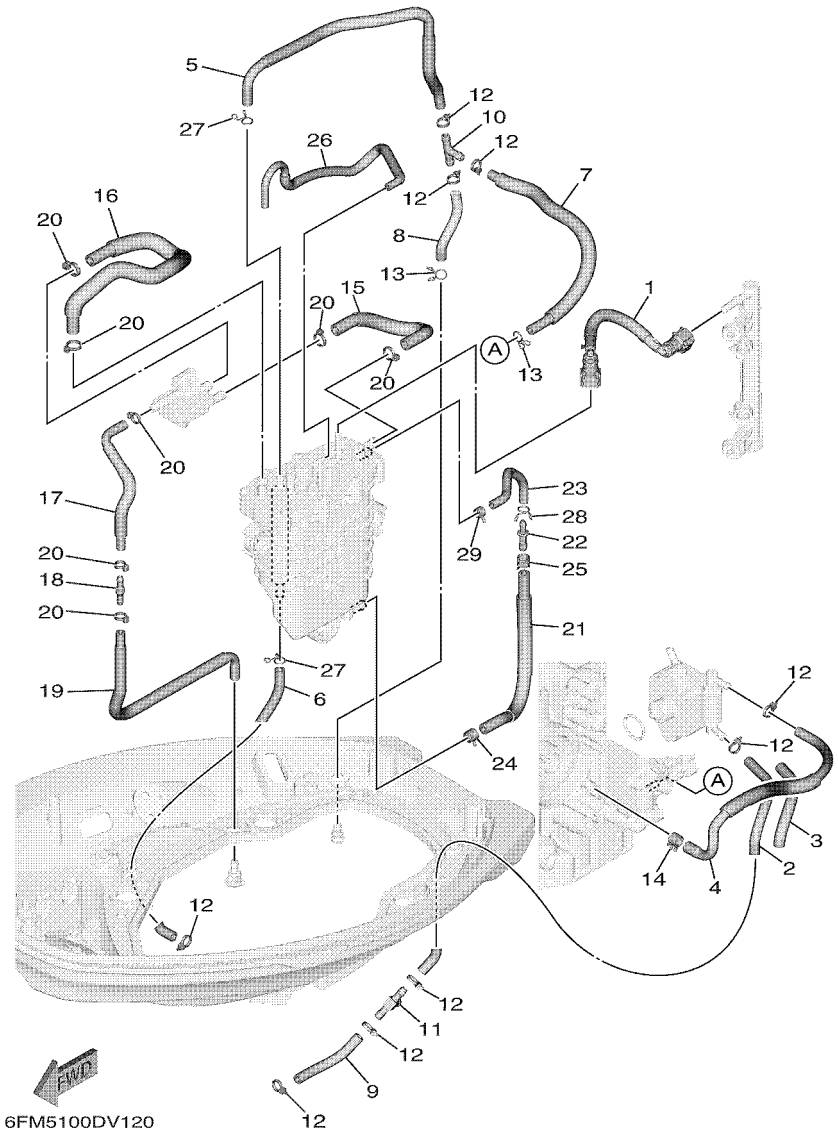

FIG. 12 FUEL 2 — CARBURANT 2

REF. NO.	PART NO. N° PIECES	DESCRIPTION DESCRIPTION	MHB	WHB	EB	PB		REMARKS REMARQUES
28	90467–08M10	CLIP JONC	1	1	1	1		
29	90467–08092	CLIP JONC	1	1	1	1		

FIG. 13 STARTER DEMARREUR

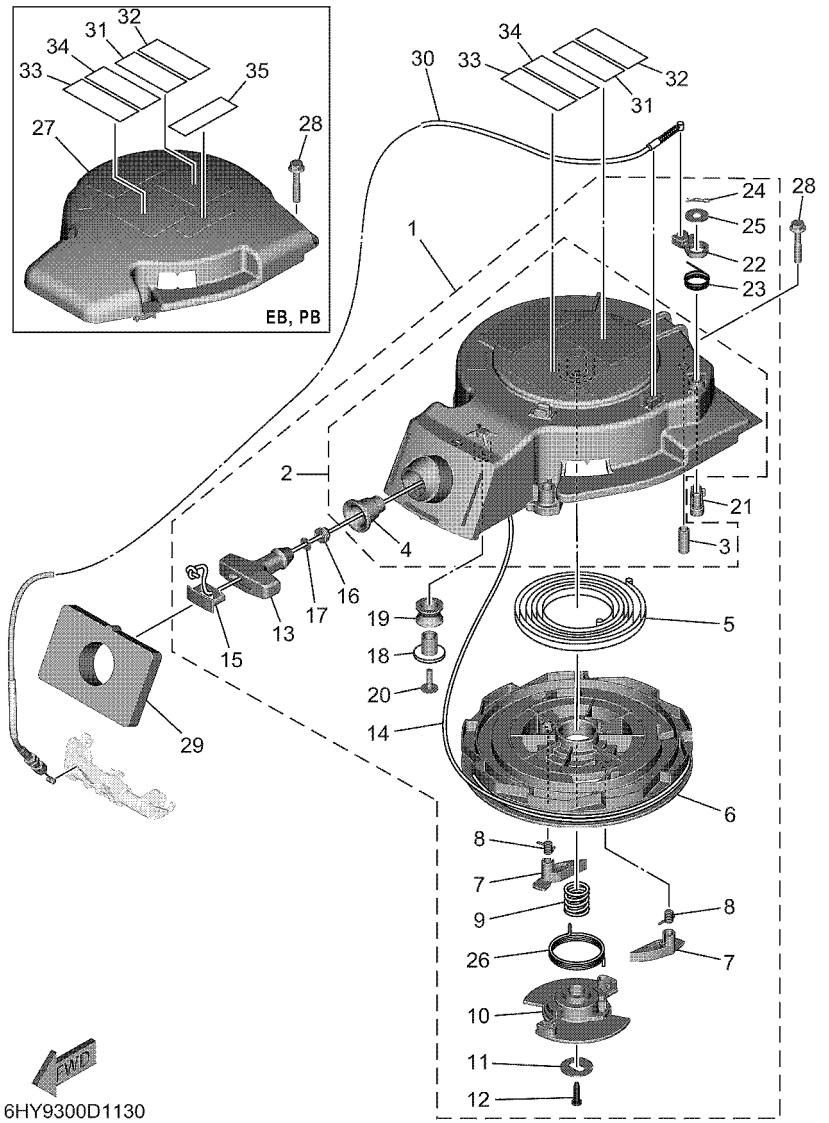

*1:CUT FROM 50M ROLLS (PART NO. 90790-48193), CUTTING LENGTH: 1.95M
*1:A PRELEVER SUR BOBINE 50M ,(REFERENCE 90790-48193),
LONGUEUR DE COUPE: 1.95M

REF. NO.	PART NO. N° PIECES	DESCRIPTION DESCRIPTION	MHB	WHB	EB	PB		REMARKS REMARQUES
1	6FM–15710–06	STARTER ASSY DEMARREUR COMPLET	1	1				
2	6FM–15711–10	.CASE, STARTER .CARTER DE DEMARREUR	1	1				
3	6FM–15764–10	..COLLAR 1 ..COLLERETTE 1	3	3				
4	68T–15795–00	..GUIDE, ROPE ..GUIDE DE CABLE	1	1				
5	6FM–15713–00	.SPRING, STARTER .RESSORT DE DEMARREUR	1	1				
6	6FM–15714–01	.DRUM, SHEAVE .TAMBOUR, POULIE	1	1				
7	6FM–15741–01	.PAWL, DRIVE .CLIQUET, ENTRAINEMENT	2	2				
8	6FM–15734–01	.SPRING, RETURN .RESSORT, RAPPEL	2	2				
9	6FM–15705–01	.SPRING, DRIVE PAWL .RESSORT DE CLIQUET	1	1				
10	6FM–15735–01	.GUIDE, CAM .COULISSEAU	1	1				
11	6FM–15726–00	.WASHER, FLAT .RONDELLE, PLATE	1	1				
12	6FM–15793–01	.SCREW .VIS	1	1				
13	6G1–15755–00	.HANDLE, STARTER .POIGNEE, DE DEMARREUR	1	1				
14	*	.WIRE, STARTER (L:1950MM) .CABLE DE DEMARREUR (L:1950MM)	1	1				*1 *1
15	6G1–15779–00	.COVER .COUVERCLE	1	1				
16	6A0–15789–01	.DAMPER .AMORTISSEUR	1	1				
17	6FM–15721–01	.SHIM .CALE	1	1				
18	6FM–15753–00	.BUSH .CHARBON	1	1				
19	6FM–15752–00	.ROLLER, WIRE .GALET, CABLE	1	1				
20	6FM–15768–00	.BOLT .BOULON	1	1				
21	63V–15794–00	.STOPPER .BUTEE	1	1				
22	6FM–15748–00	.PLUNGER, STARTER STOP .PLONGEUR, BOUTE DE DEMAR	1	1				
23	63V–15734–00	.SPRING, RETURN .RESSORT, RAPPEL	1	1				
24	6FM–15799–01	.CLIP .JONC	1	1				
25	63V–15726–00	.WASHER, FLAT .RONDELLE, PLATE	1	1				
26	6FM–15767–00	.SPRING .RESSORT	1	1				
27	6FM–81337–00	COVER, FLYWHEEL COUVERCLE, VOLANT			1	1		

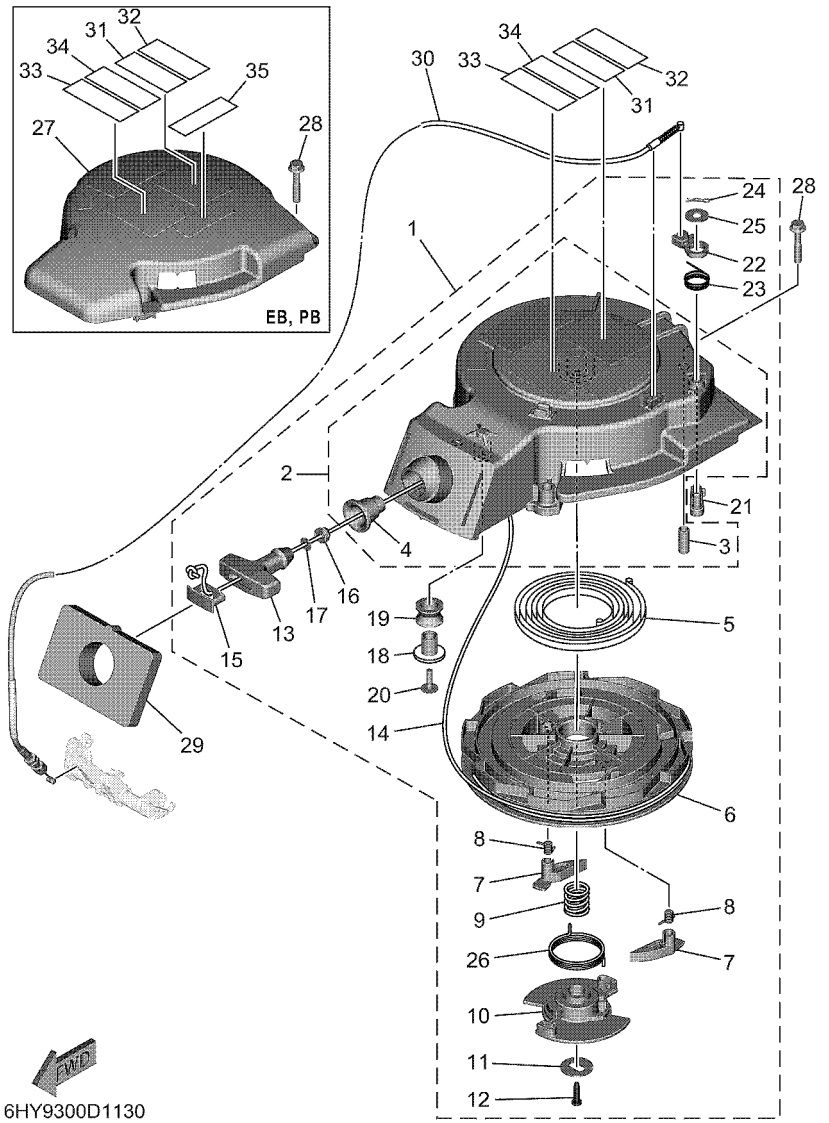

*1:CUT FROM 50M ROLLS (PART NO. 90790-48193), CUTTING LENGTH: 1.95M
*1:A PRELEVER SUR BOBINE 50M ,(REFERENCE 90790-48193),
LONGUEUR DE COUPE: 1.95M

FIG. 13 STARTER — DEMARREUR

REF. NO.	PART NO. N° PIECES	DESCRIPTION DESCRIPTION	MHB	WHB	EB	PB		REMARKS REMARQUES
28	90105–06035	BOLT, FLANGE BOULON, A COLLERETTE	3	3				
	97E95–06520	BOLT, HEXAGON W/W DEEP RECESS VIS HEXAGONAL AVC RONDELLE			3	3		
29	6FM–15762–00	SEAL, RUBBER 2 JOINT CAOUTCHOUC 2	1	1				
30	6FM–15770–08	CABLE COMP., STARTER STOP CABLE, BUTEE DE DEMAR	1	1				
31	6EE–81995–41	LABEL, WARNING ETIQUETTE, AVERTISSEMENT	1	1	1	1		
32	6EE–81995–51	LABEL, WARNING ETIQUETTE, AVERTISSEMENT	1	1	1	1		
33	6EE–81994–41	LABEL, SAFETY ETIQUETTE, SECURITE	1	1	1	1		
34	6EE–81994–51	LABEL, SAFETY ETIQUETTE, SECURITE	1	1	1	1		
35	6AG–81996–01	MARK MARQUE			1	1		

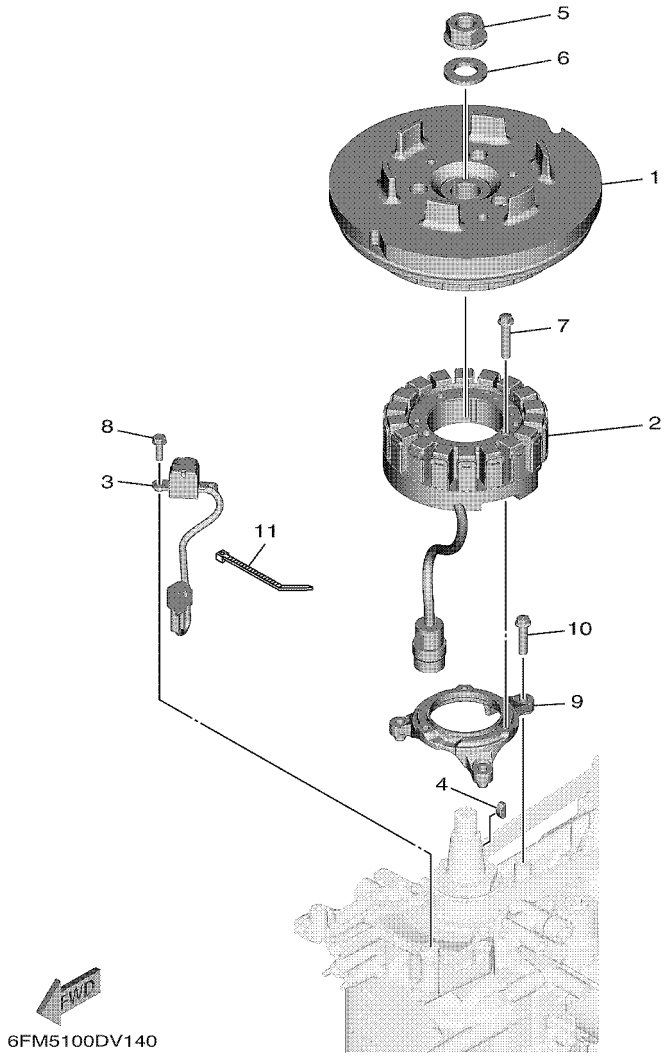

FIG. 14 GENERATOR — GENERATRICE

REF. NO.	PART NO. N° PIECES	DESCRIPTION DESCRIPTION	MHB	WHB	EB	PB		REMARKS REMARQUES
1	6FM–81450–12	ROTOR ASSY ROTOR COMPLET	1	1	1	1		
2	6FM–81410–01	STATOR ASSY STATOR COMPLET	1	1	1	1		
3	6CB–85580–01	COIL, PULSER BOBINE, PULSEUR	1	1	1	1		
4	90280–05013	KEY, WOODRUFF CLAVETTE, DEMI-LUNE	1	1	1	1		
5	90179–16M05	NUT ECROU	1	1	1	1		
6	90201–16M44	WASHER, PLATE RONDELLE, PLATE	1	1	1	1		
7	95023–06030	BOLT BOULON, A COLLERETTE	3	3	3	3		
8	97595–05516	BOLT, WITH WASHER VIS HEXAGONAL AVC RONDELLE	2	2	2	2		
9	6FM–85561–01	BASE, MAGNETO BASE, MAGNETO	1	1	1	1		
10	95023–06025	BOLT BOULON, A COLLERETTE	3	3	3	3		
11	90465–11M59	CLAMP BRIDE	1	1	1	1		

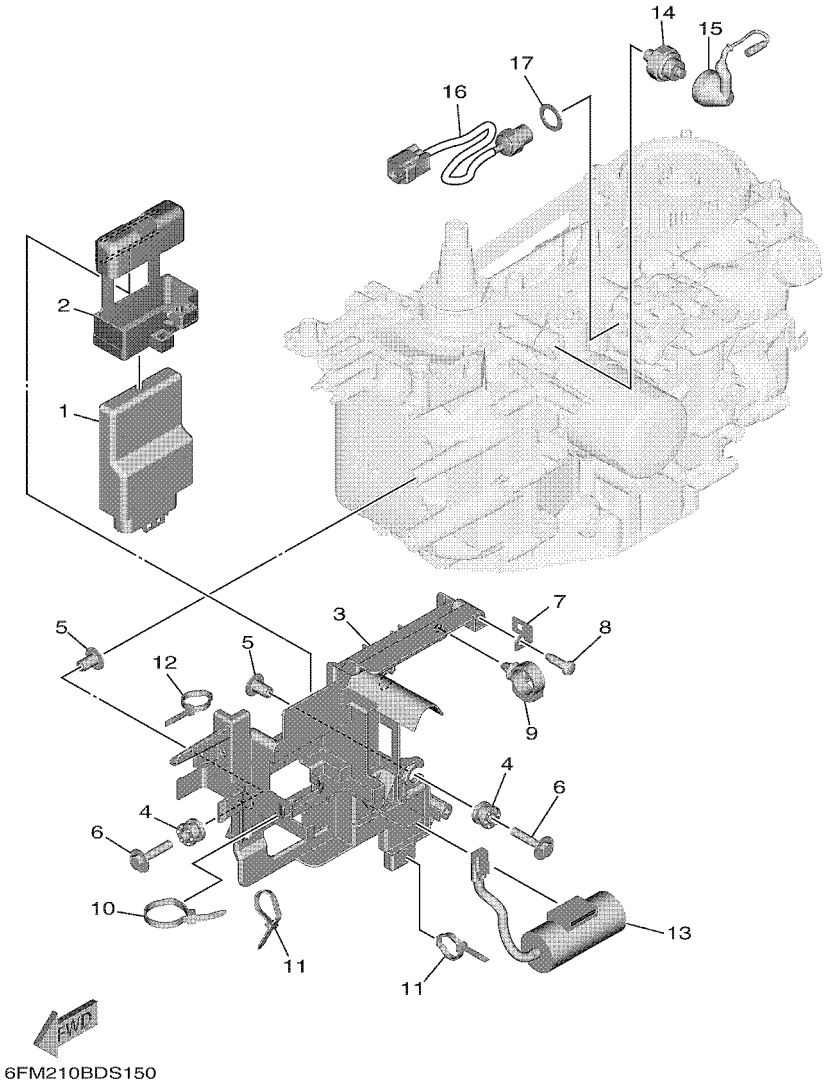

FIG. 15 ELECTRICAL 1 — PARTIE ELECTRIQUE 1

REF. NO.	PART NO. N° PIECES	DESCRIPTION DESCRIPTION	MHB	WHB	EB	PB		REMARKS REMARQUES
1	6HY–8591A–20	ENGINE CONTROL UNIT ASSY BLOC DE CONTROL	1	1	1	1		
2	6FM–85546–00	BAND COLLIER	1	1	1	1		
3	6FM–81948–00	BRACKET SUPPORT	1	1	1	1		
4	64J–85516–01	SPACER ENTRETOISE	3	3	3	3		
5	69M–42758–01	COLLAR ENTRETOISE	3	3	3	3		
6	90119–06293	BOLT, WITH WASHER BOULON, AVEC RONDELLE	3	3	3	3		
7	68V–85548–01	HOLDER SUPPORT	1	1	1	1		
8	97780–60620	SCREW, TAPPING VIS, TETE BOMBEE	1	1	1	1		
9	90464–20181	CLAMP BRIDE	1	1	1	1		
10	90465–13M18	CLAMP BRIDE	1	1	1	1		
11	90465–13M11	CLAMP BRIDE	2	2	2	2		
12	90465–13M97	CLAMP BRIDE	1	1	1	1		
13	6FM–81965–00	CONDENSER, SMOOTHING CONDENSATEUR	1	1				
14	64J–82504–00	OIL PRESSURE SWITCH ASSY CONTACTEUR DE PRESSION D'HUILE	1	1	1	1		
15	68V–81315–01	LEAD WIRE ASSY FIL	1	1	1	1		
16	6CJ–85790–00	THERMOSENSOR ASSY SENSITOMETRE	1	1	1	1		
17	90430–14115	GASKET JOINT	1	1	1	1		

FIG. 16 ELECTRICAL 2 — PARTIE ELECTRIQUE 2

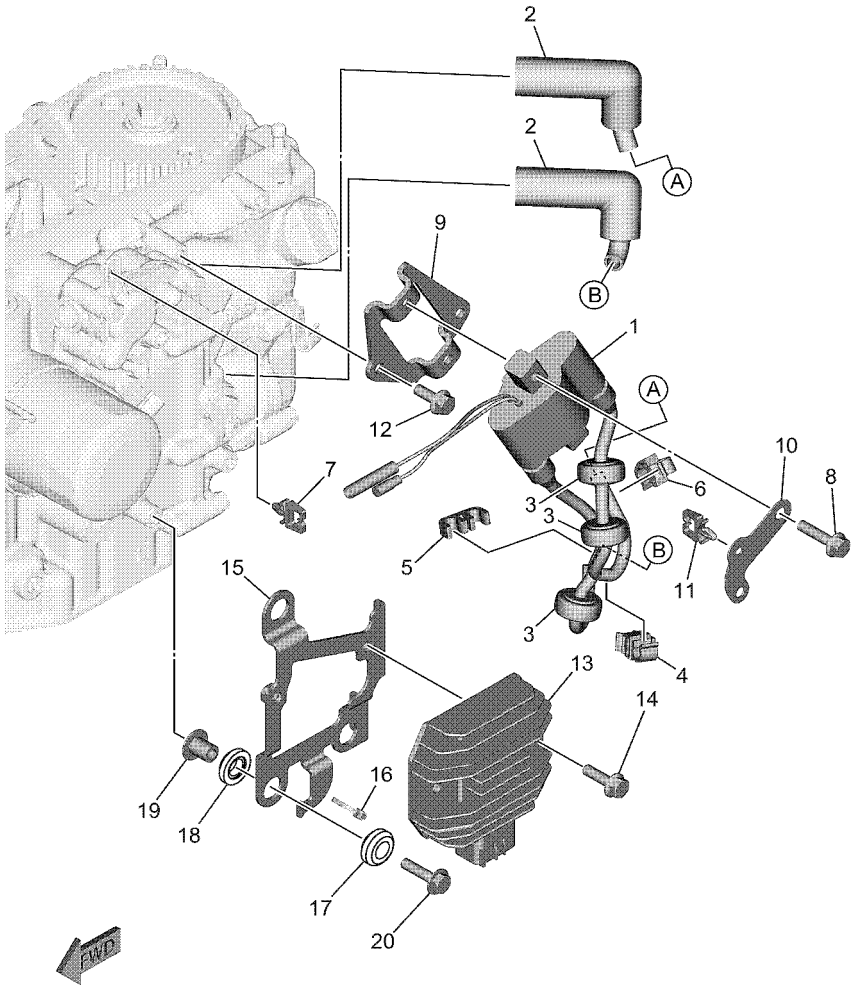

6HY9100D1160

REF. NO.	PART NO. N° PIECES	DESCRIPTION DESCRIPTION	MHB	WHB	EB	PB		REMARKS REMARQUES
1	6F5–85570–13	IGNITION COIL ASSY BOBINE D'ALLUMAGE (ENS.)	1	1	1	1		
2	6AH–82370–00	PLUG CAP ASSY ANTIPARASITE	2	2	2	2		
3	90480–25003	GROMMET PASSE-FIL	3	3	3	3		
4	90464–07017	CLAMP BRIDE	1	1	1	1		
5	67F–82361–00	CLAMP, CORD COLLIER, CORDON	1	1	1	1		
6	90464–09018	CLAMP BRIDE	1	1	1	1		
7	90464–11121	CLAMP BRIDE	1	1	1	1		
8	95D95–06020	BOLT, FLANGE DEEP RECESS BOULON FIXATION	2	2	2	2		
9	6FM–82316–00	BRACKET, IGNITION COIL SUPPORT, BOBINE D'ALLUMAGE	1	1	1	1		
10	6FM–81539–00	PLATE, COIL PLAQUE, BOBINE	1	1	1	1		
11	90464–11121	CLAMP BRIDE	1	1	1	1		
12	95D95–06016	BOLT, FLANGE DEEP RECESS BOULON FIXATION	2	2	2	2		
13	6FM–81960–00	RECTIFIER & REGULATOR ASSY REDRESSEUR REGULATEUR CPLT	1		1	1		
	6FM–81960–10	RECTIFIER & REGULATOR ASSY REDRESSEUR REGULATEUR CPLT		1				
14	95D95–06020	BOLT, FLANGE DEEP RECESS BOULON FIXATION	2	2	2	2		
15	6FM–8711E–00	STAY, RECTIFIER SUPPORT, REDRESSEUR	1	1	1	1		
16	90465–11M10	CLAMP BRIDE	1	1	1	1		
17	6FM–82535–01	GROMMET RONDELLE CAOUTCHOUC	3	3	3	3		
18	6FM–82545–01	GROMMET PASSE-FIL	3	3	3	3		
19	90387–06289	COLLAR COLLERETTE	3	3	3	3		
20	90119–06311	BOLT, WITH WASHER BOULON, AVEC RONDELLE	3	3	3	3		

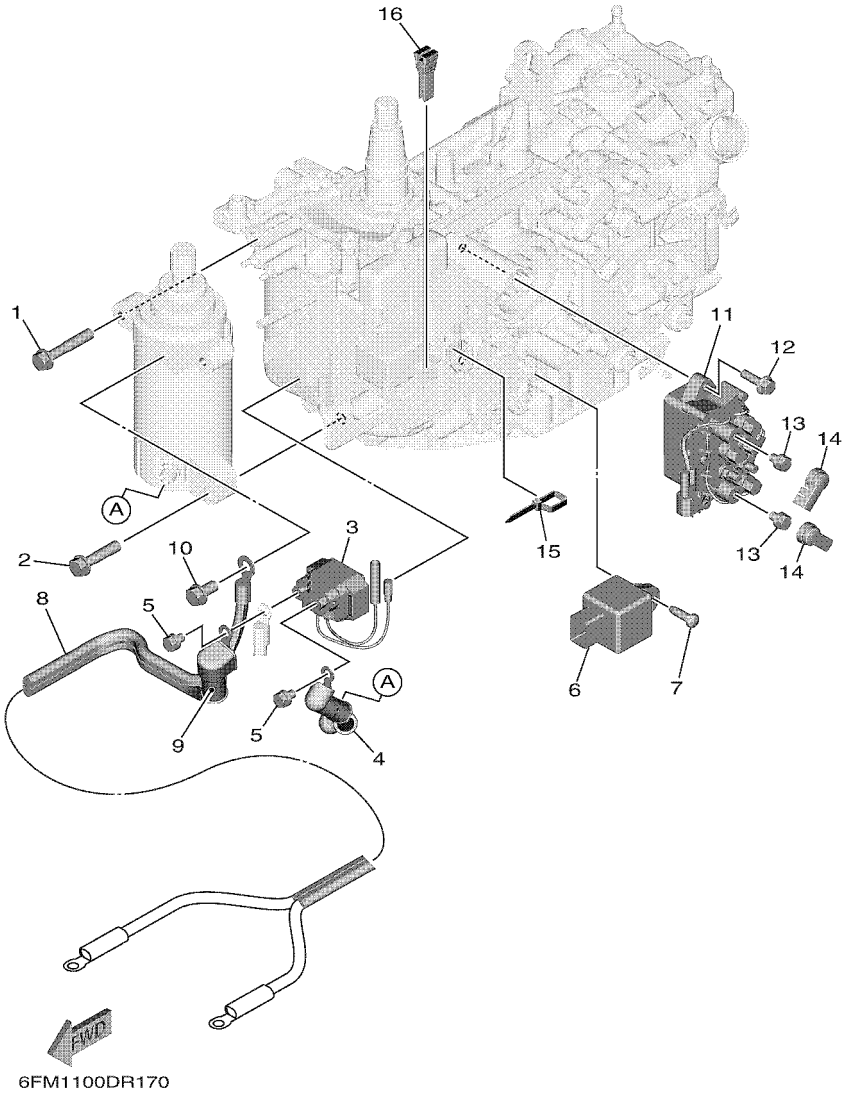

FIG. 17 ELECTRICAL 3 — PARTIE ELECTRIQUE 3

REF. NO.	PART NO. N° PIECES	DESCRIPTION DESCRIPTION	MHB	WHB	EB	PB		REMARKS REMARQUES
1	97513–08545	BOLT, WITH WASHER VIS HEXAGONAL AVC RONDELLE		2	2	2		
2	97513–08535	BOLT, WITH WASHER VIS HEXAGONAL AVC RONDELLE		1	1	1		
3	6FM–81940–00	STARTER RELAY ASSY LANCEUR RELAIS (ENS.)		1	1	1		
4	6AH–82117–01	WIRE, LEAD FIL		1	1	1		
5	97E95–06610	BOLT, HEXAGON W/W DEEP RECESS VIS HEXAGONAL AVC RONDELLE		2	2	2		
6	68V–81950–00	RELAY ASSY RELAIS COMPLET			1	1		
7	97780–60620	SCREW, TAPPING VIS, TETE BOMBEE			1	1		
8	6FM–82105–01	BATTERY CABLE (L: 2.0M) CABLE DE BATTERIE (L: 2.0M)		1	1	1		
9	6P2–82119–00	COVER, LEAD WIRE GARNITURE, FIL		1	1	1		
10	97E95–08516	BOLT, HEXAGON W/W DEEP RECESS VIS HEXAGONAL AVC RONDELLE		1	1	1		
11	63P–W8195–00	RELAY ASSY RELAIS COMPLET				1		
12	95D95–06020	BOLT, FLANGE DEEP RECESS BOULON FIXATION				2		
13	97E95–06610	BOLT, HEXAGON W/W DEEP RECESS VIS HEXAGONAL AVC RONDELLE				2		
14	6P2–8183X–00	CAP, TERMINAL COUVERCLE, BORNE				2		
15	90465–13M11	CLAMP BRIDE				1		
16	67F–2812A–00	PULLER, FUSE TENDEUR, FUSIBLE		1	1	1		

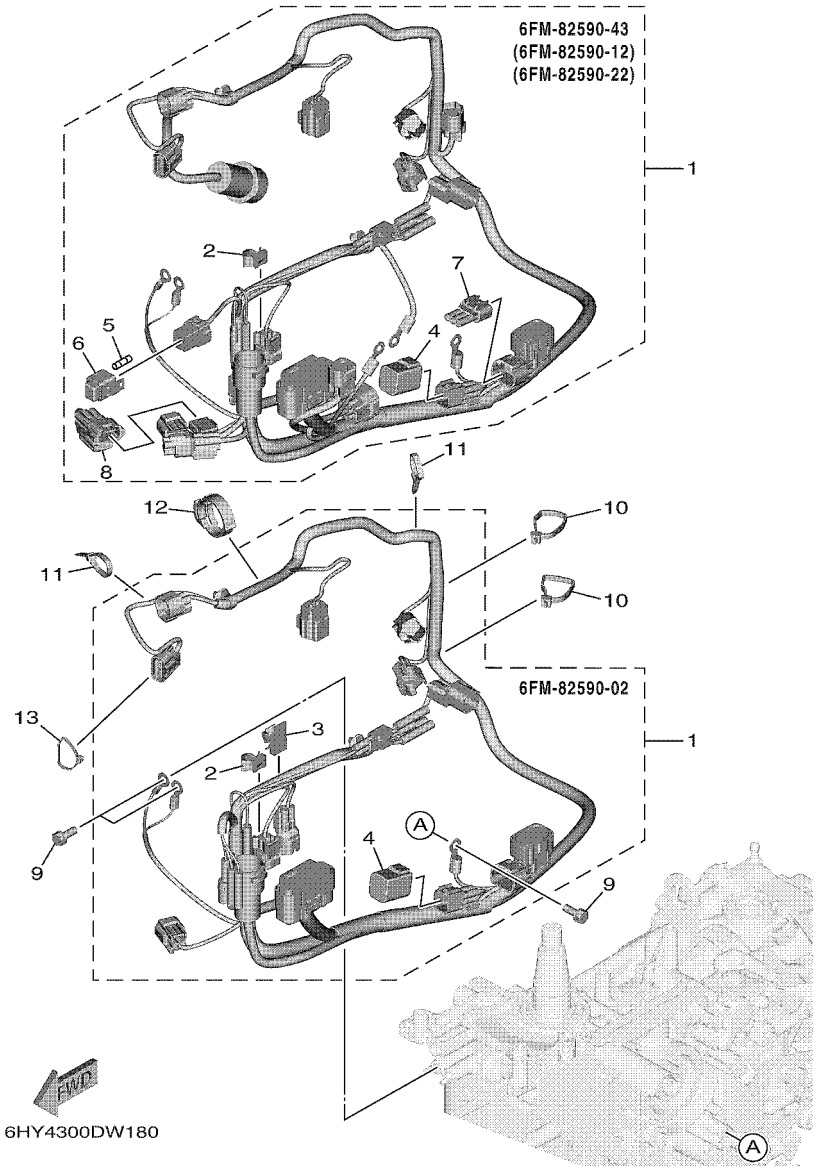

FIG. 18 ELECTRICAL 4 — PARTIE ELECTRIQUE 4

REF. NO.	PART NO. N° PIECES	DESCRIPTION DESCRIPTION	MHB	WHB	EB	PB		REMARKS REMARQUES
1	6FM–82590–02	WIRE HARNESS ASSY FAISCEAU DE FILS COMPLET	1					
	6FM–82590–12	WIRE HARNESS ASSY FAISCEAU DE FILS COMPLET		1				
	6FM–82590–22	WIRE HARNESS ASSY FAISCEAU DE FILS COMPLET			1			
	6FM–82590–43	WIRE HARNESS ASSY FAISCEAU DE FILS COMPLET				1		
2	90464–09M47	.CLAMP .BRIDE	1	1	1	1		
3	90464–12002	.CLAMP .BRIDE	1	1				
4	6Y8–82582–11	.CAP 1 (4PIN) .COUVERCLE 1 (4P)	1	1	1	1		
5	67F–82151–00	.FUSE (20A) .FUSIBLE (20A)		2	2	2		
6	67F–8215B–10	.CAP (YELLOW) .BOUCHON (YELLOW)		1	1	1		
7	6FM–82582–00	.CAP 1 (3P) .COUVERCLE 1 (3P)			1	1		
8	6FM–81980–01	.DIODE ASSY .REDRESSEUR 2				1		
9	97E95–06516	BOLT, HEXAGON W/W DEEP RECESS VIS HEXAGONAL AVC RONDELLE	3	3	3	3		
10	90465–11M52	CLAMP BRIDE	2	2	2	2		
11	90465–13M11	CLAMP BRIDE	2	2	2	2		
12	90464–28003	CLAMP BRIDE	1	1	1	1		
13	90465–11M59	CLAMP BRIDE	1	1	1	1		

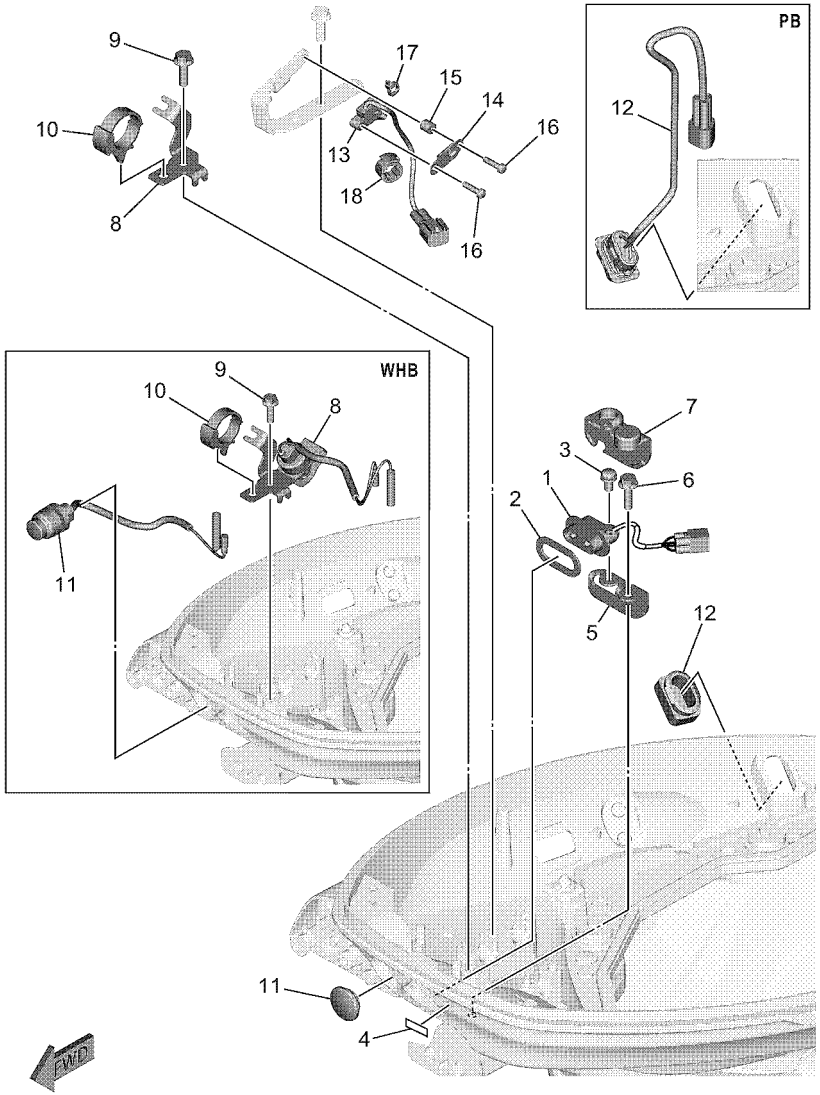

6HY9300D1190

FIG. 19 ELECTRICAL 5 — PARTIE ELECTRIQUE 5

REF. NO.	PART NO. N° PIECES	DESCRIPTION DESCRIPTION	MHB	WHB	EB	PB		REMARKS REMARQUES
1	62Y–84301–10	PILOT LIGHT ASSY 1 LAMPE-TEMOIN 1	1	1	1	1		
2	6FM–83589–00	GASKET GARNITURE	1	1	1	1		
3	97985–06212	SCREW, WITH WASHER VIS, AVEC RONDELLE	1	1	1	1		
4	67C–85415–00	MARK, SIGNAL LAMP ETIQUETTE	1	1	1	1		
5	6FM–82388–00	PLATE PLAQUETTE	1	1	1	1		
6	90109–06M86	BOLT BOULON	1	1	1	1		
7	6FM–82355–01	GROMMET JOINT	1	1	1	1		
8	6FM–15774–00	STAY 4 SUPPORT 4	1		1	1		
	6FM–82540–00	NEUTRAL SWITCH ASSY CONTACTEUR DE POINT-MORT		1				
9	90109–06M86	BOLT BOULON	1	1	1	1		
10	90464–12183	CLAMP BRIDE	1	1	1	1		
11	6G1–42725–01	GROMMET PASSE-FIL	1		1	1		
	65W–81870–00	STARTING SWITCH ASSY CONTACT A CLEF		1				
12	6FM–42723–01	COVER, BOTTOM COUVERCLE	1	1	1			
	6FM–82563–01	TRIM & TILT SWITCH ASSY INCLINER ET PARER COMMUTATEUR				1		
13	60V–8259F–01	SWITCH ASSY COMMUTATEUR	1	1	1	1		
14	6FM–82588–00	PLATE PLAQUE	1	1	1	1		
15	90387–04001	COLLAR COLLERETTE	1	1	1	1		
16	97985–04116	SCREW, WITH WASHER VIS, AVEC RONDELLE	2	2	2	2		
17	90465–11M10	CLAMP BRIDE	1	1	1	1		
18	90464–13227	CLAMP BRIDE	1	1	1	1		

FIG. 20 ELECTRICAL 6 — PARTIE ELECTRIQUE 6

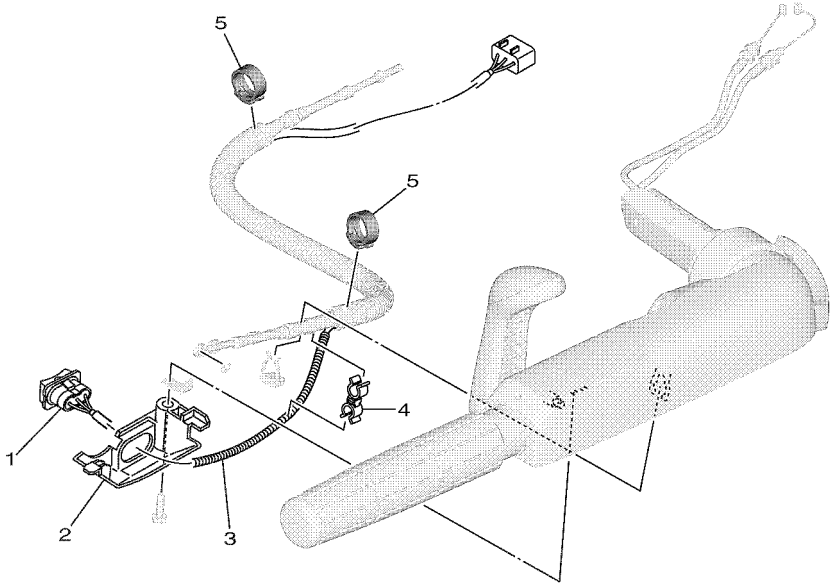

6FM1100DR200

REF. NO.	PART NO. N° PIECES	DESCRIPTION DESCRIPTION	MHB	WHB	EB	PB		REMARKS REMARQUES
1	6FM–81860–01	SWITCH ASSY COMMUTATEUR COMPLET	1	1				
2	6FM–42176–00	STAY 2 SUPPORT 2	1	1				
3	90446–10M82	HOSE (L90) DURITE (L90)	1	1				
4	90464–10M59	CLAMP BRIDE	1	1				
5	90464–16001	CLAMP BRIDE	2	2				

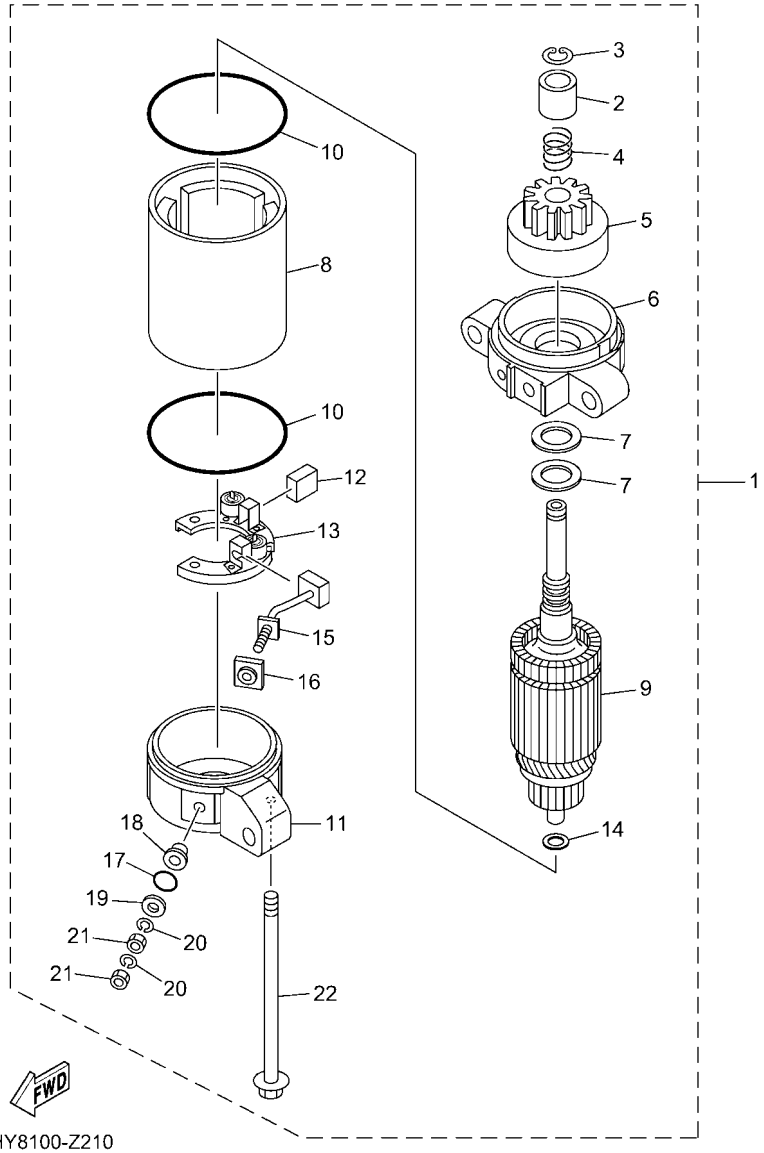

6HY8100-Z210

FIG. 21 STARTING MOTOR — DEMARREUR ELECTRIQUE

REF. NO.	PART NO. N° PIECES	DESCRIPTION DESCRIPTION	MHB	WHB	EB	PB		REMARKS REMARQUES
1	6AH–81800–10	STARTING MOTOR ASSY DEMARREUR ELECTRIQUE COMPLET		1	1	1		
2	6AH–81859–00	.STOPPER, PINION .BUTEE, PIGNON		1	1	1		
3	689–81884–00	.CLIP,PINION STOPPER .CLIP, STOPPEUR DE PIGNON		1	1	1		
4	689–81858–00	.SPRING, RETURN .RESSORT		1	1	1		
5	689–81807–20	.GEAR ASSY, STARTING MOTOR .PIGNON, DEMARREUR ELECTRIQUE		1	1	1		
6	6AH–81830–10	.FRONT BRACKET ASSY .SUPPORT AVANT		1	1	1		
7	689–81835–00	.WASHER .RONDELLE		2	2	2		UN UN
8	689–81810–20	.STATOR ASSY .STATOR COMPLET		1	1	1		
9	689–81850–20	.ARMATURE ASSY .INDUIT		1	1	1		
10	689–81847–20	.O-RING .JOINT TORIQUE		2	2	2		
11	6AH–81820–10	.REAR BRACKET ASSY .SUPPORT ARRIERE COMPLET		1	1	1		
12	689–81812–20	.BRUSH 2 .CHARBON 2		1	1	1		
13	6AH–81840–00	.BRUSH HOLDER ASSY .SUPPORT DE CHARBON		1	1	1		
14	689–81824–00	.WASHER 2 .RONDELLE 2		1	1	1		
15	6AH–81811–10	.BRUSH 1 .CHARBON 1		1	1	1		
16	689–8182H–00	.BUSH, TERMINAL 2 .DOUILLE, BORNE 2		1	1	1		
17	689–8182L–00	.O-RING 1 .JOINT TORIQUE 1		1	1	1		
18	689–8182G–00	.BUSH, TERMINAL .BAGUE, BORNE		1	1	1		
19	689–8182E–00	.WASHER .RONDELLE		1	1	1		
20	689–8182F–00	.WASHER .RONDELLE		2	2	2		
21	689–8182A–00	.NUT .ECROU		2	2	2		
22	689–81826–20	.BOLT .BOULON		2	2	2		

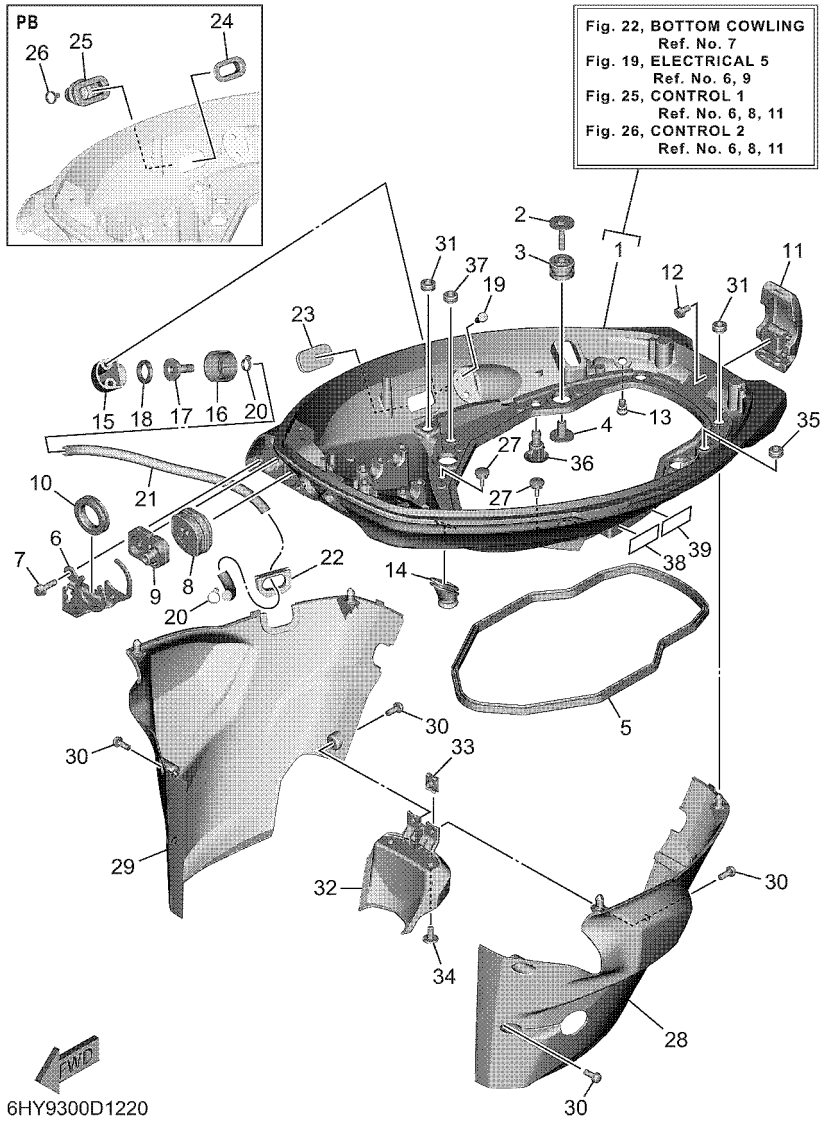

FIG. 22 BOTTOM COWLING — CAPOT INFERIEUR

REF. NO.	PART NO. N° PIECES	DESCRIPTION DESCRIPTION	MHB	WHB	EB	PB		REMARKS REMARQUES
1	6FM–42710–00–8D	BOTTOM COWLING ASSY ENS. EMBASE	1	1	1	1		
2	90119–06291	BOLT, WITH WASHER BOULON, AVEC RONDELLE	4	4	4	4		
3	90480–21M82	GROMMET PASSE-FIL	4	4	4	4		
4	90387–06176	COLLAR COLLERETTE	4	4	4	4		
5	6FM–42716–00	RUBBER SEAL 1 JOINT EN CAOUTCHOUC 1	1	1	1	1		
6	6FM–42761–00	STOPPER PLAQUETTE	1	1				
	6FM–42761–10	STOPPER PLAQUETTE			1	1		
7	90109–06316	BOLT BOULON	2	2	2	2		
8	6FM–42724–01	GROMMET PASSE-FIL	1	1				
	6FM–42724–11	GROMMET PASSE-FIL			1	1		
9	6FM–42725–01	GROMMET PASSE-FIL	1	1	1	1		
10	6FM–42726–11	GROMMET PASSE-FIL	1	1	1	1		
11	6FM–42801–00	COWLING CLAMP COMP. BRIDE DE CAPOT COMP.	1	1	1	1		
12	97E95–06512	BOLT, HEXAGON W/W DEEP RECESS VIS HEXAGONAL AVC RONDELLE	1	1	1	1		
13	6BL–44391–00	NIPPLE, HOSE RACCORD D'ESSENCE	1	1	1	1		
14	6AH–42727–01	GROMMET PASSE-FIL	1	1	1	1		
15	6DR–12572–00	ADAPTER ADAPTATEUR	1	1	1	1		
16	6R3–12581–10	JOINT, HOSE 1 JOINT DE TUYAU	1	1	1	1		
17	6R3–12582–00	JOINT, HOSE 2 RACCORD DE TUYAU 1	1	1	1	1		
18	6R3–12583–10	GASKET, HOSE JOINT JOINT	1	1	1	1		
19	97780–60520	SCREW, TAPPING VIS, TETE BOMBEE	2	2	2	2		
20	90465–11M10	CLAMP BRIDE	2	2	2	2		
21	90445–11182	HOSE (L300) DURITE (L300)	1	1	1	1		
22	6AH–42726–01	GROMMET PASSE-FIL	1	1	1	1		
23	6H4–42726–01	GROMMET PASSE-FIL	1	1	1			
24	6BG–42384–00	SEAL, CAP JOINT, CAPUCHON				1		
25	6BG–42724–01	GROMMET PASSE-FIL				1		

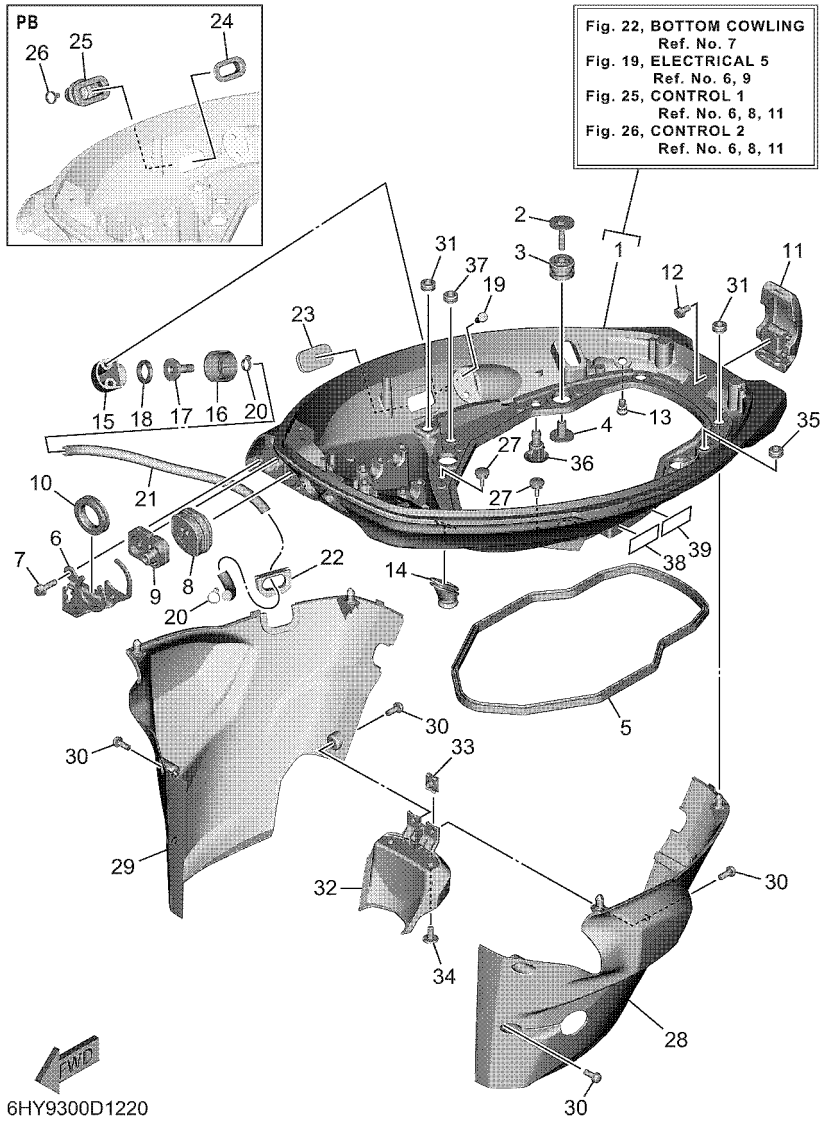

FIG. 22 BOTTOM COWLING — CAPOT INFERIEUR

REF. NO.	PART NO. N° PIECES	DESCRIPTION DESCRIPTION	MHB	WHB	EB	PB		REMARKS REMARQUES
26	90465–11M10	CLAMP BRIDE				1		
27	6H4–42748–01	GROMMET PASSE-FIL	2	2	2	2		
28	6FM–42741–00	APRON, 1 CAPOT LATERAL 1	1	1	1	1		
29	6FM–42771–00	APRON, 2 CAPOT LATERAL 2	1	1	1	1		
30	90159–06062	SCREW, WITH WASHER VIS, AVEC RONDELLE	6	6	6	6		
31	90480–13M24	GROMMET PASSE-FIL	4	4	4	4		
32	6FM–42735–00	PROTECTOR PROTECTEUR	1	1	1	1		
33	90183–061A8	NUT, SPRING ECROU, RESSORT	2	2	2	2		
34	90111–06144	BOLT, HEXAGON SOCKET BUTTON BOULON	2	2	2	2		
35	90480–13M24	GROMMET PASSE-FIL	1	1	1	1		
36	6P2–44391–00	NIPPLE, HOSE RACCORD D'ESSENCE	1	1	1	1		
37	90480–13M24	GROMMET PASSE-FIL	1	1	1	1		
38	6EE–42794–41	LABEL, WARNING (GENERAL) ETIQUETTE, AVERTISSEMENT	1	1	1	1		
39	6EE–42794–51	LABEL, WARNING (GENERAL) ETIQUETTE, AVERTISSEMENT	1	1	1	1		

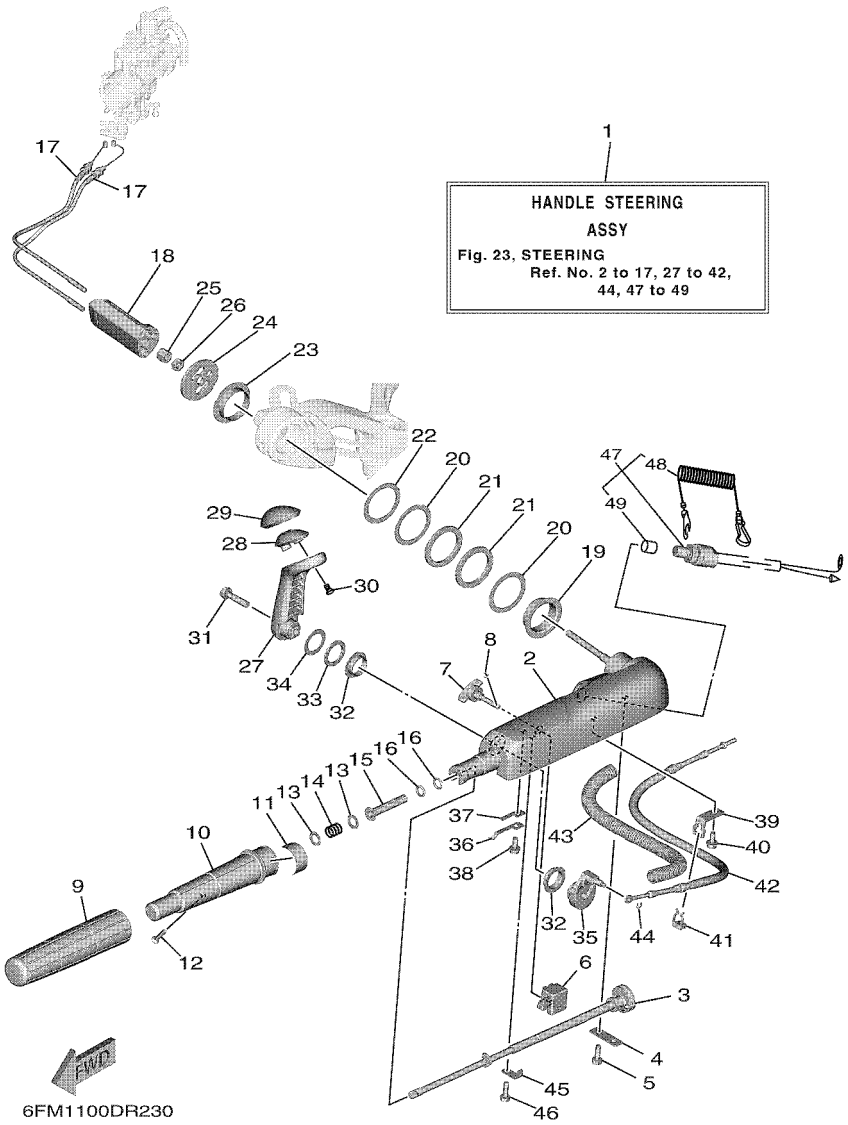

FIG. 23 STEERING — DIRECTION

REF. NO.	PART NO. N° PIECES	DESCRIPTION DESCRIPTION	MHB	WHB	EB	PB		REMARKS REMARQUES
1	6FM–W0084–03–8D	HANDLE STEERING ASSY BARRE FRANCHE (ENS.)	1	1				
2	6FM–42111–00–8D	HANDLE, STEERING POIGNEE	1	1				
3	6DR–42138–01	LEVER, THROTTLE LEVIER, ACCELERATEUR	1	1				
4	65W–42159–00	STAY SUPPORT	1	1				
5	90105–06M07	BOLT, FLANGE BOULON, A COLLERETTE	1	1				
6	6DR–42126–00	FRICTION, STEERING HANDLE GRIP CUVETTE, POIGNEE DE DIRECTION	1	1				
7	65W–42125–00	BOLT, FRICTION ADJUSTING BOULON	1	1				
8	91490–16010	PIN. COTTER GOUPILLE	1	1				
9	67D–42177–01	RUBBER, HANDLE CAOUTCHOUC, POIGNEE	1	1				
10	67D–42119–01	GRIP, STEERING HANDLE POIGNEE, BARRE FRANCHE	1	1				
11	6FM–42137–00	INDICATOR, THROTTLE INDICATEUR, ACCELERATION	1	1				
12	90152–05011	SCREW, COUNTERSUNK VIS, TETE NOYEE	1	1				
13	90201–10M02	WASHER, PLATE RONDELLE, PLATE	2	2				
14	90501–23215	SPRING, COMPRESSION RESSORT, COMPRESSION	1	1				
15	6FM–42171–00	BUSHING COUSSINET	1	1				
16	93210–10010	O-RING JOINT TORIQUE	2	2				
17	6FM–26301–00	THROTTLE CABLE ASSY CABLE D'ACCELERATEUR	2	2				
18	6FM–26316–01	BOOT, THROTTLE CABLE SOUFFLET, CABLE D'ACCELERATEUR	1	1				
19	66R–42171–00	BUSHING COUSSINET	1	1				
20	90201–43M00	WASHER, PLATE RONDELLE, PLATE	2	2				
21	90206–43M22	WASHER, WAVE RONDELLE, ONDULEE	2	2				
22	90202–43M57	WASHER, PLATE RONDELLE, PLATE	1	1				
23	90386–40M99	BUSH DOUILLE	1	1				
24	65W–42131–01	COVER, HANDLE STEERING COUVERCLE	1	1				
25	95780–10300	NUT, FLANGE ECROU	1	1				
26	95380–10700	NUT ECROU	1	1				
27	6DR–44111–00–8D	HANDLE, GEAR SHIFT POIGNEE, LEVIER D'EMBRAYAGE	1	1				

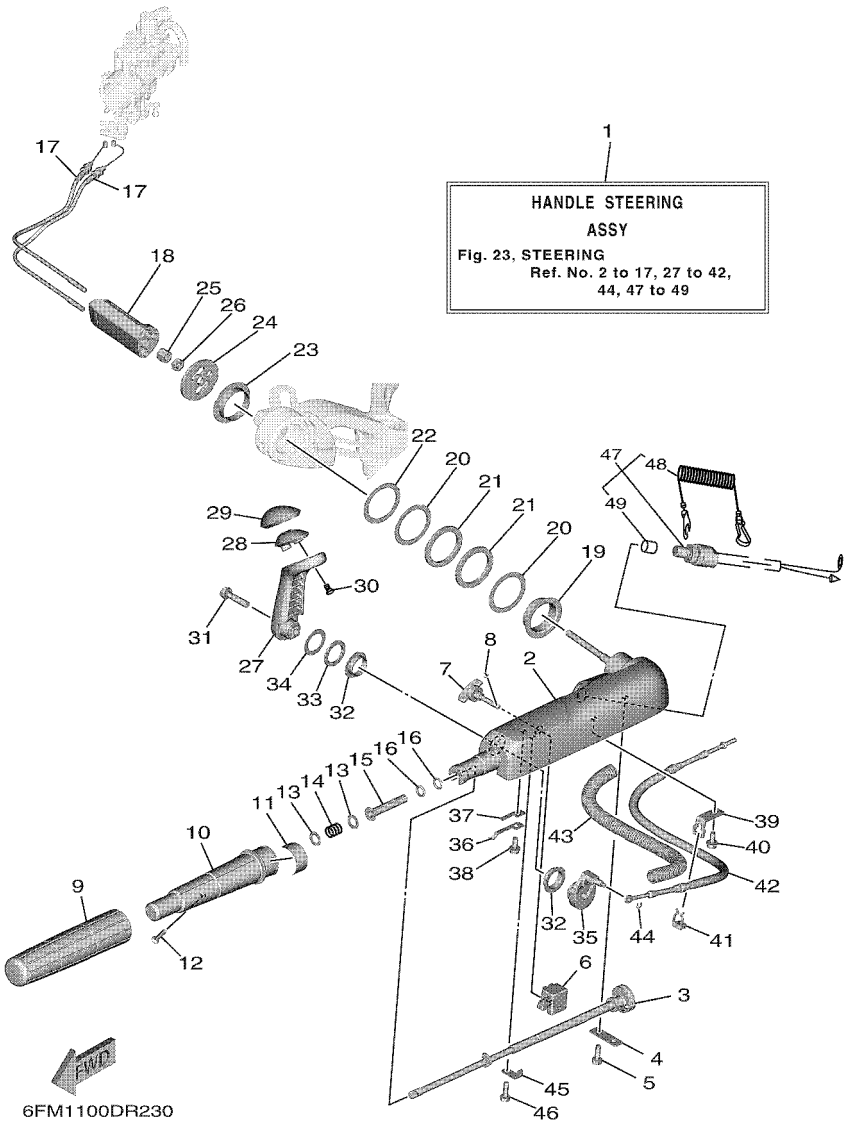

FIG. 23 STEERING — DIRECTION

REF. NO.	PART NO. N° PIECES	DESCRIPTION DESCRIPTION	MHB	WHB	EB	PB		REMARKS REMARQUES
28	6DR–44173–00	LEVER, SHIFT CONTROL POIGNEE, INVERSION	1	1				
29	6DR–42129–01	BUSHING, RUBBER DOUILLE, CAOUTCHOUC	1	1				
30	97780–60920	SCREW, TAPPING VIS, TETE BOMBEE	2	2				
31	97E95–08535	BOLT, HEXAGON W/W DEEP RECESS VIS HEXAGONAL AVC RONDELLE	1	1				
32	90386–26MA3	BUSH DOUILLE	2	2				
33	90206–26M25	WASHER, WAVE RONDELLE, ONDULEE	1	1				
34	90202–26M59	WASHER, PLATE RONDELLE, PLATE	1	1				
35	6DR–44113–A0	CAM PLATE, HANDLE CAME, VERROUILLAGE	1	1				
36	6DR–44116–00	SPRING RESSORT	1	1				
37	66R–44118–00	BRACKET SUPPORT	1	1				
38	95D95–06014	BOLT, FLANGE DEEP RECESS BOULON FIXATION	1	1				
39	66R–48538–00	CLAMP, CABLE 1 COLLIER	1	1				
40	95D95–06014	BOLT, FLANGE DEEP RECESS BOULON FIXATION	1	1				
41	63D–48538–00	CLAMP, CABLE 1 COLLIER	1	1				
42	6DR–48321–00	CABLE CABLE	1	1				
43	90446–20MF5	HOSE (L320) DURITE (L320)	1	1				
44	99080–04600	CIRCLIP CIRCLIP	1	1				
45	6DR–44114–00	STOPPER PLAQUETTE	1	1				
46	91380–06025	BOLT BOULON	1	1				
47	6FM–82575–00	ENGINE STOP SWITCH ASSY COUPE CIRCUIT CPLT	1	1				
48	682–82556–00	.LANYARD, STOP SWITCH .CORDON DU COUPE CIRCUIT	1	1				
49	689–8257Y–00	.CAP .COUVERCLE	1	1				

FIG. 24 STEERING FRICTION — CUVETTE POIGNEE DE DIRECTION

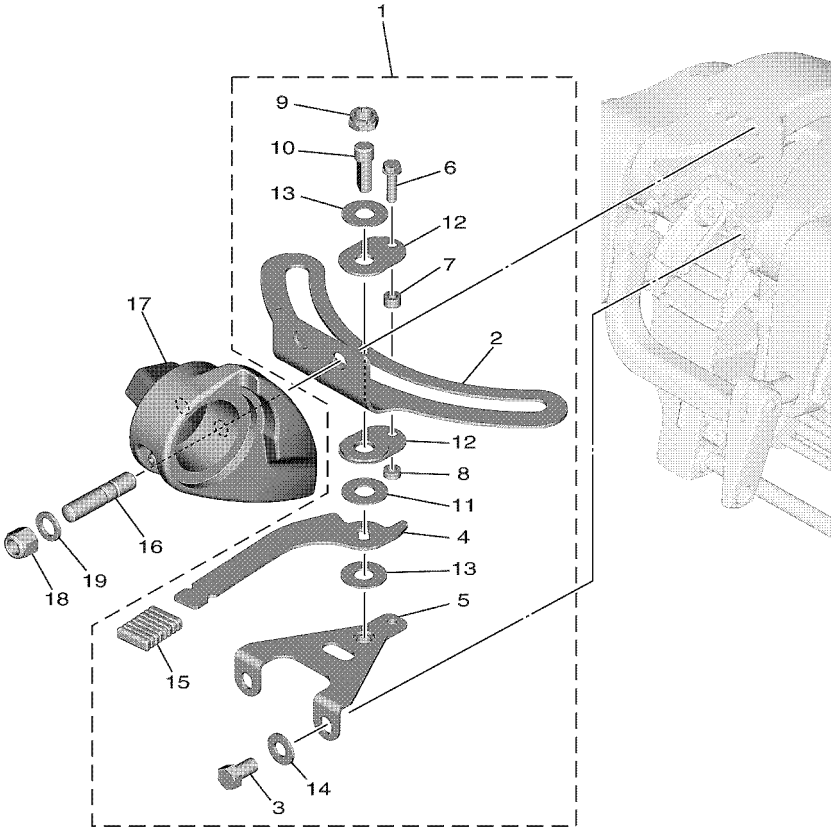

6FM2010DS240

REF. NO.	PART NO. N° PIECES	DESCRIPTION DESCRIPTION	MHB	WHB	EB	PB		REMARKS REMARQUES
1	6FM–42508–02	STEERING FRICTION ASSY DIRECTION FRICTION (ENS.)	1	1				
2	6FM–42527–00	.PLATE, FRICTION .PLAQUE, FRICTION	1	1				
3	97D95–08014	.BOLT, HEXAGON DEEP RECESS .VIS HEXAGONAL	2	2				
4	6FM–42561–00	.KNOB, STEERING LOCK .BOUTON	1	1				
5	6FM–42525–00	.PLATE, FRICTION .PLAQUE, FRICTION	1	1				
6	97595–05520	.BOLT, WITH WASHER .VIS HEXAGONAL AVC RONDELLE	1	1				
7	90387–05054	.COLLAR .COLLERETTE	1	1				
8	90387–05053	.COLLAR .COLLERETTE	1	1				
9	90185–10M14	.NUT, SELF-LOCKING .ECROU,AUTO-BLOQUANT	1	1				
10	67C–42562–A0	.SHAFT, STEERING LOCK .ARBRE,ANTIVOL DE DIRECTION	1	1				
11	90202–10M56	.WASHER, PLATE .RONDELLE, PLATE	1	1				
12	65W–42528–00	.PLATE, FRICTION .PLAQUE, FRICTION	2	2				
13	90201–106M5	.WASHER, PLATE .RONDELLE, PLATE	2	2				
14	92995–08200	.WASHER .RONDELLE	2	2				
15	689–43633–01	.COVER, TILT LEVER .COUVERCLE	1	1				
16	90116–10064	BOLT, STUD GOUJON	2	2				
17	6FM–42121–01–8D	BRACKET SUPPORT	1	1				
18	90185–10027	NUT, SELF-LOCKING ECROU,AUTO-BLOQUANT	2	2				
19	90201–10049	WASHER, PLATE RONDELLE, PLATE	2	2				

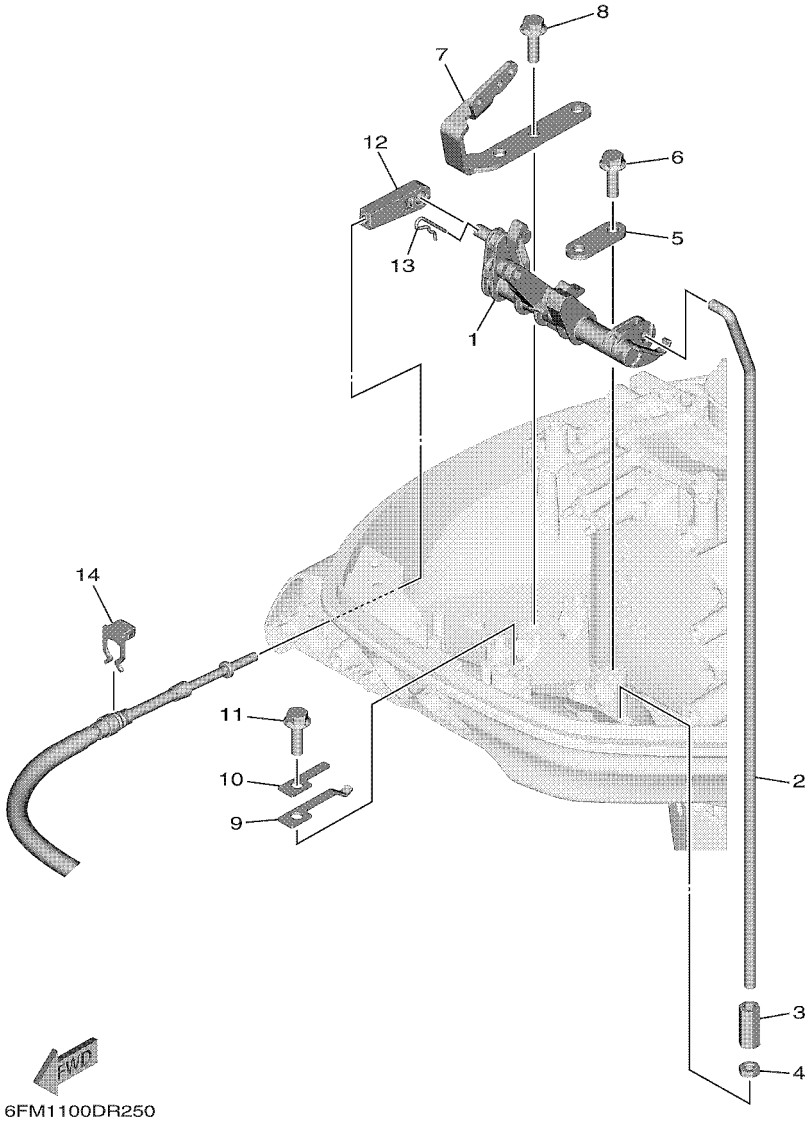

FIG. 25 CONTROL 1 — COMMANDE 1

REF. NO.	PART NO. N° PIECES	DESCRIPTION DESCRIPTION	MHB	WHB	EB	PB		REMARKS REMARQUES
1	6FM–44121–00	LEVER, SHIFT ROD LEVIER, TIGE D'INVERSION	1	1				
2	6FM–44143–00	ROD, SHIFT 1 TIGE D'EMBRAYAGE 1	1	1				S(16.7") S(16.7")
	6FM–44143–10	ROD, SHIFT 1 TIGE D'EMBRAYAGE 1	1	1				L(21.7") L(21.7")
3	90170–06015	NUT ECROU	1	1				
4	95380–06700	NUT ECROU	1	1				
5	6FM–41661–00	BRACKET 1 SUPPORT 1	1	1				
6	90109–06M86	BOLT BOULON	1	1				
7	6FM–41662–00	BRACKET 2 SUPPORT 2	1	1				
8	90109–06M86	BOLT BOULON	1	1				
9	66R–44116–00	SPRING RESSORT	1	1				
10	66R–44118–00	BRACKET SUPPORT	1	1				
11	90109–06M86	BOLT BOULON	1	1				
12	6FM–48344–00	CABLE END, REMOTE CONTROL CHAPE CABLE	1	1				
13	90468–18008	CLIP JONC	1	1				
14	63D–48538–00	CLAMP, CABLE 1 COLLIER	1	1				

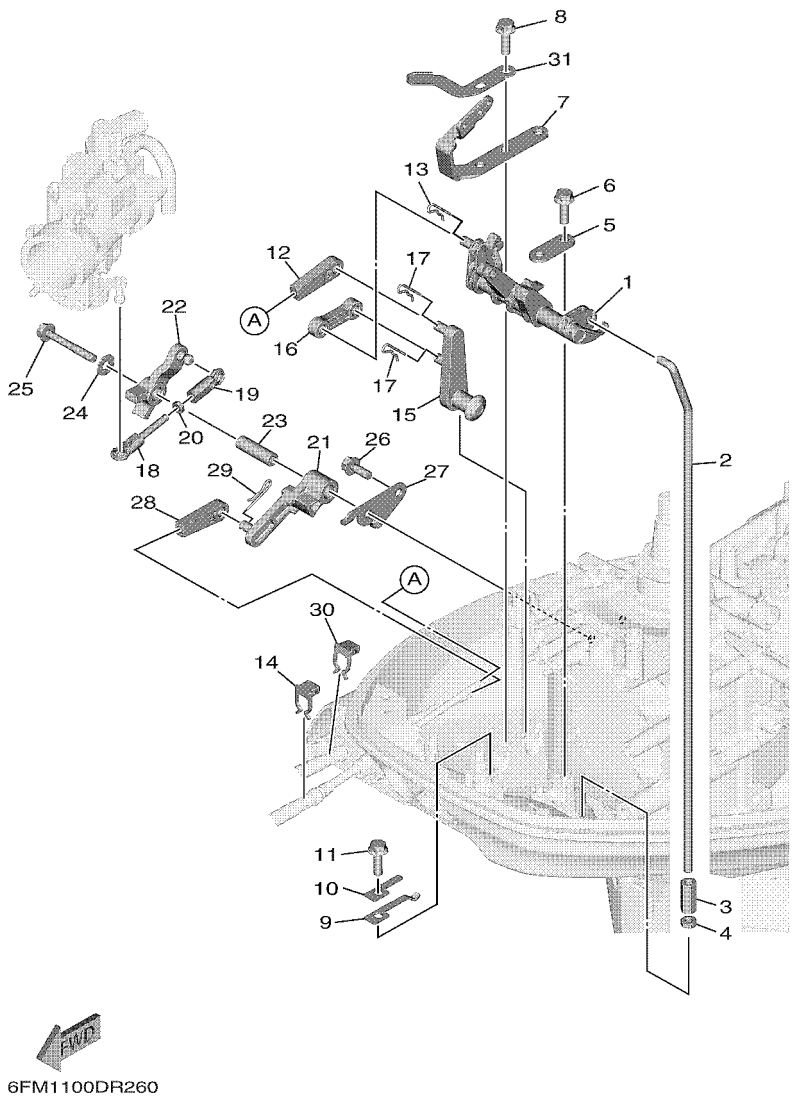

FIG. 26 CONTROL 2 — COMMANDE 2

REF. NO.	PART NO. N° PIECES	DESCRIPTION DESCRIPTION	MHB	WHB	EB	PB		REMARKS REMARQUES
1	6FM–44121–00	LEVER, SHIFT ROD LEVIER, TIGE D'INVERSION			1	1		
2	6FM–44143–00	ROD, SHIFT 1 TIGE D'EMBRAYAGE 1			1	1		S(16.7") S(16.7")
	6FM–44143–10	ROD, SHIFT 1 TIGE D'EMBRAYAGE 1			1	1		L(21.7") L(21.7")
3	90170–06015	NUT ECROU			1	1		
4	95380–06700	NUT ECROU			1	1		
5	6FM–41661–00	BRACKET 1 SUPPORT 1			1	1		
6	90109–06M86	BOLT BOULON			1	1		
7	6FM–41662–00	BRACKET 2 SUPPORT 2			1	1		
8	90109–06M86	BOLT BOULON			1	1		
9	66R–44116–00	SPRING RESSORT			1	1		
10	66R–44118–00	BRACKET SUPPORT			1	1		
11	90109–06M86	BOLT BOULON			1	1		
12	6FM–48344–00	CABLE END, REMOTE CONTROL CHAPE CABLE			1	1		
13	90468–18008	CLIP JONC			1	1		
14	63D–48538–00	CLAMP, CABLE 1 COLLIER			1	1		
15	6FM–44125–00	LEVER, SHIFT ROD LEVIER, TIGE D'INVERSION			1	1		
16	6FM–44192–00	LINK, SHIFT ROD BIELLETTE			1	1		
17	90468–18008	CLIP JONC			2	2		
18	682–41237–50	JOINT, LINK RACCORD			1	1		
19	6H4–41237–00	JOINT, LINK RACCORD			1	1		
20	95380–05700	NUT ECROU			1	1		
21	6FM–42157–00	LEVER, THROTTLE LEVIER DE AVANCE			1	1		
22	6FM–41283–00	LEVER, FREE ACCEL. LEVIER			1	1		
23	90387–06M59	COLLAR COLLERETTE			1	1		
24	92990–06200	WASHER, PLAIN RONDELLE, PLATE			1	1		
25	95D95–06045	BOLT, FLANGE DEEP RECESS BOULON FIXATION			1	1		
26	95D95–06016	BOLT, FLANGE DEEP RECESS BOULON FIXATION			1	1		

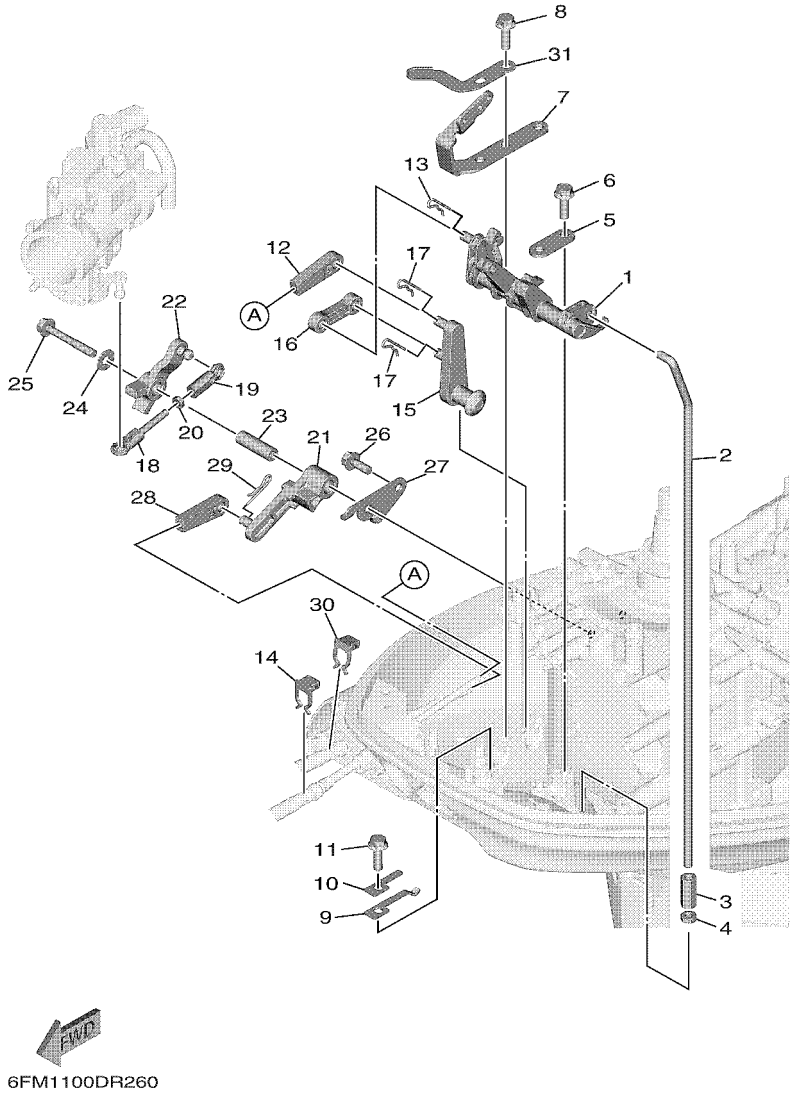

FIG. 26 CONTROL 2 — COMMANDE 2

REF. NO.	PART NO. N° PIECES	DESCRIPTION DESCRIPTION	MHB	WHB	EB	PB		REMARKS REMARQUES
27	6FM–14571–00	BRACKET, THROTTLE SUPPORT, ACCELERATEUR			1	1		
28	6FM–48344–00	CABLE END, REMOTE CONTROL CHAPE CABLE			1	1		
29	90468–18008	CLIP JONC			1	1		
30	63D–48538–00	CLAMP, CABLE 1 COLLIER			1	1		
31	6FM–82398–00	PLATE 3 PLAQUETTE 3				1		

FIG. 27 REMO CON ATTACHMENT — COMMANDE A DISTANCE

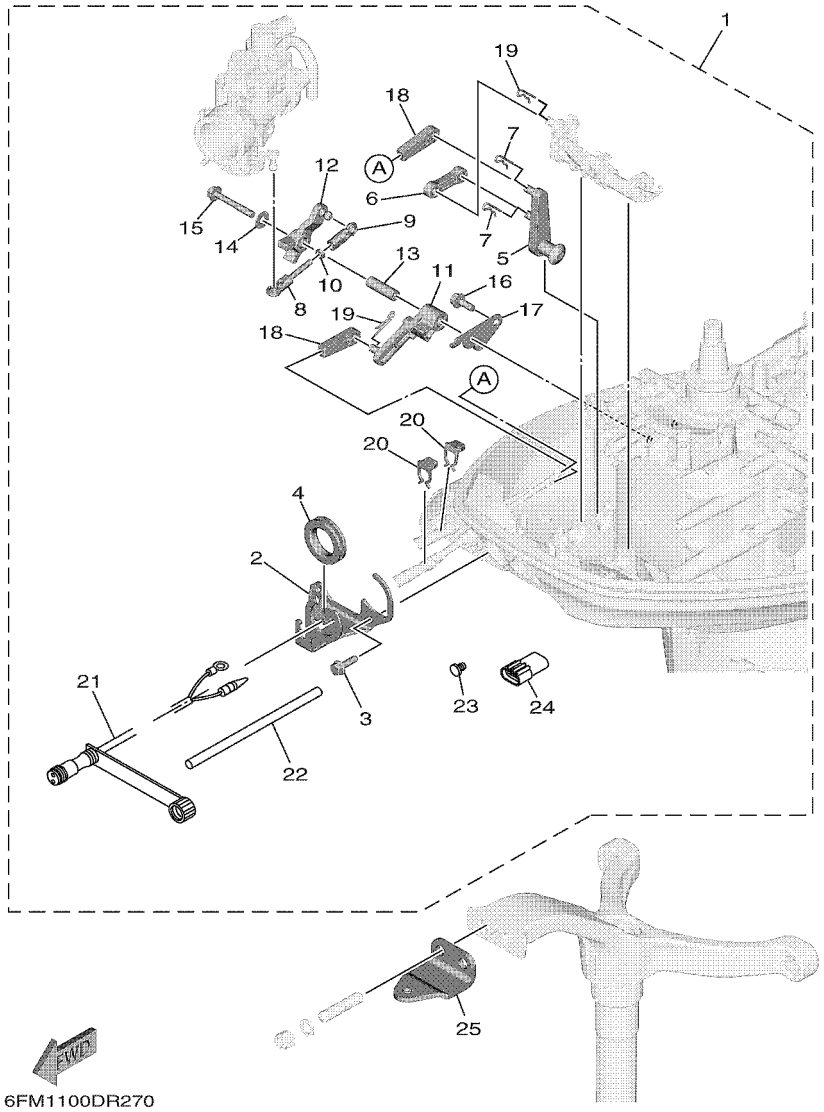

REF. NO.	PART NO. N° PIECES	DESCRIPTION DESCRIPTION	MHB	WHB	EB	PB		REMARKS REMARQUES
1	6FM–48501–02	REMOTE CONT. ATTACHMENT ASSY. COMMANDE A DISTANCE (KIT)	1	1				AP AP
2	6FM–42761–10	.STOPPER .PLAQUETTE	1	1				
3	90109–06316	.BOLT .BOULON	2	2				
4	6FM–42726–11	.GROMMET .PASSE-FIL	1	1				
5	6FM–44125–00	.LEVER, SHIFT ROD .LEVIER, TIGE D'INVERSION	1	1				
6	6FM–44192–00	.LINK, SHIFT ROD .BIELLETTE	1	1				
7	90468–18008	.CLIP .JONC	2	2				
8	682–41237–50	.JOINT, LINK .RACCORD	1	1				
9	6H4–41237–00	.JOINT, LINK .RACCORD	1	1				
10	95380–05700	.NUT .ECROU	1	1				
11	6FM–42157–00	.LEVER, THROTTLE .LEVIER DE AVANCE	1	1				
12	6FM–41283–00	.LEVER, FREE ACCEL. .LEVIER	1	1				
13	90387–06M59	.COLLAR .COLLERETTE	1	1				
14	90201–06M62	.WASHER, PLATE .RONDELLE, PLATE	1	1				
15	95D95–06045	.BOLT, FLANGE DEEP RECESS .BOULON FIXATION	1	1				
16	95D95–06016	.BOLT, FLANGE DEEP RECESS .BOULON FIXATION	1	1				
17	6FM–14571–00	.BRACKET, THROTTLE .SUPPORT, ACCELERATEUR	1	1				
18	6FM–48344–00	.CABLE END, REMOTE CONTROL .CHAPE CABLE	2	2				
19	90468–18008	.CLIP .JONC	2	2				
20	63D–48538–00	.CLAMP, CABLE 1 .COLLIER	2	2				
21	6D5–84340–01	.SOCKET CORD ASSY 1 .DOUILLE	1	1				
22	90446–09M42	.HOSE (L160) .DURITE (L160)	1	1				
23	703–82119–01	.COVER, LEAD WIRE .GARNITURE, FIL	1	1				
24	6FM–82582–00	.CAP 1 (3P) .COUVERCLE 1 (3P)	1	1				
25	65W–48511–01	HOOK, STEERING ATTACHE, DIRECTION	1	1				AP AP

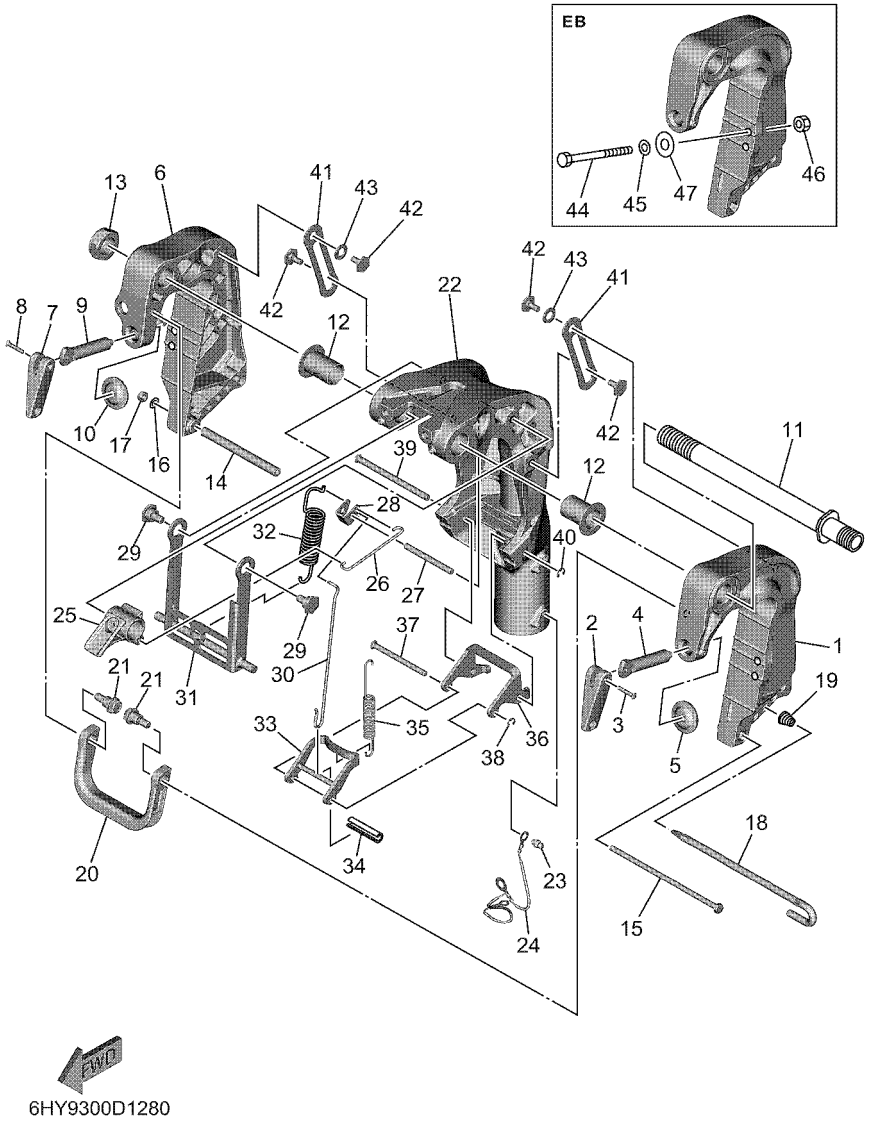

6HY9300D1280

FIG. 28 BRACKET 1 — SUPPORT 1

REF. NO.	PART NO. N° PIECES	DESCRIPTION DESCRIPTION	MHB	WHB	EB	PB		REMARKS REMARQUES
1	6FM–43111–00–8D	BRACKET, CLAMP 1 PRESSE 1	1	1	1			
2	6E0–43118–01	HANDLE, TRANSOM CLAMP POIGNEE DE VIS DE PRESSE	1	1	1			
3	90243–04M01	PIN GOUPILLE	1	1	1			
4	6E7–43116–00	SCREW, TRANSOM CLAMP VIS DE PRESSE	1	1	1			
5	648–43114–01	PAD, TRANSOM CLAMP RONDELLE D'APPUI	1	1	1			
6	6FM–43112–00–8D	BRACKET, CLAMP 2 PRESSE 2	1	1	1			
7	6E0–43118–01	HANDLE, TRANSOM CLAMP POIGNEE DE VIS DE PRESSE	1	1	1			
8	90243–04M01	PIN GOUPILLE	1	1	1			
9	6E7–43116–00	SCREW, TRANSOM CLAMP VIS DE PRESSE	1	1	1			
10	648–43114–01	PAD, TRANSOM CLAMP RONDELLE D'APPUI	1	1	1			
11	6FM–43131–00	BOLT, CLAMP BRACKET BOULON, PRESSE	1	1				
	6FM–43131–10	BOLT, CLAMP BRACKET BOULON, PRESSE			1			
12	90386–22MA4	BUSH DOUILLE	2	2	2			
13	90185–22043	NUT, SELF-LOCKING ECROU,AUTO-BLOQUANT	1	1	1			
14	90387–06369	COLLAR COLLERETTE	1	1	1			
15	90101–06M18	BOLT BOULON	1	1	1			
16	92995–06600	WASHER RONDELLE	1	1	1			
17	95380–06700	NUT ECROU	1	1	1			
18	6L2–43160–01	TILT ROD ASSY BROCHE D'INCLINAISON (ENS.)	1	1	1			
19	90502–10M07	SPRING, CONICAL RESSORT, CONIQUE	1	1	1			
20	6FM–42731–00	CARRYING HANDLE POIGNEE DE PORTAGE	1	1	1			
21	90109–08043	BOLT BOULON	2	2	2			
22	6FM–43311–00–8D	BRACKET, SWIVEL 1 SUPPORT, PIVOT 1	1	1	1			S(16.7") S(16.7")
	6FM–43311–10–8D	BRACKET, SWIVEL 1 SUPPORT, PIVOT 1	1	1	1			L(21.7") L(21.7")
23	93700–06004	NIPPLE, GREASE PION	1	1	1			
24	6FM–82127–00	WIRE, LEAD 2 FIL 2	1	1	1			
25	6FM–43631–00	LEVER, TILT LEVIER, INCLINAISON	1	1	1			

FIG. 28 BRACKET 1 SUPPORT 1

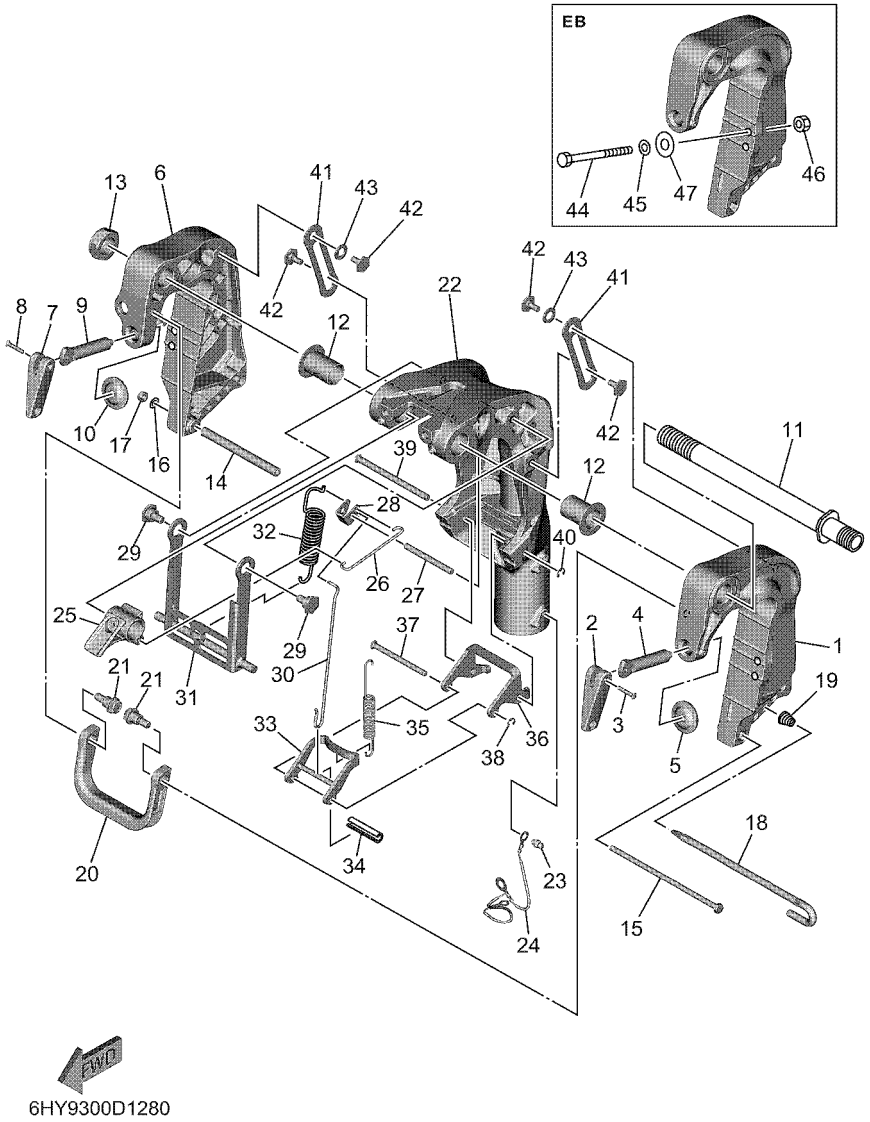

6HY9300D1280

REF. NO.	PART NO. N° PIECES	DESCRIPTION DESCRIPTION	MHB	WHB	EB	PB		REMARKS REMARQUES
26	6FM–43616–00	ROD, TILT LOCK TIGE	1	1	1			
27	6FM–43646–00	SHAFT, LEVER AXE, LEIVER	1	1	1			
28	6FM–43641–00	LEVER, TILT LEVIER, INCLINAISON	1	1	1			
29	90109–08M87	BOLT BOULON	2	2	2			
30	6FM–43617–00	ROD, TILT LOCK TIGE	1	1	1			
31	6FM–43350–00	RECEIVER ASSY RECEIVER ASSY	1	1	1			
32	6FM–43656–00	SPRING, REVERSE LOCK 1 RESSORT	1	1	1			
33	6FM–43624–00	PLATE, TILT LOCK ETRIER, VERROUILLAGE MARCHE AR	1	1	1			
34	90387–06321	COLLAR COLLERETTE	1	1	1			
35	6FM–43656–10	SPRING, REVERSE LOCK 1 RESSORT	1	1	1			
36	6FM–43613–00	ARM, TILT LOCK GUIDE	1	1	1			
37	6L2–43336–10	PIN CLAVETTE	1	1	1			
38	99080–05600	CIRCLIP CIRCLIP	1	1	1			
39	6J8–43611–01	SHAFT, TILT LOCK AXE, VERROUILLAGE MARCHE AR	1	1	1			
40	99080–05600	CIRCLIP CIRCLIP	1	1	1			
41	6FM–43627–00	STOPPER PLAQUETTE	2	2	2			
42	90109–06M84	BOLT BOULON	4	4	4			
43	90206–10M24	WASHER, WAVE RONDELLE, ONDULEE	2	2	2			
44	90101–08M88	BOLT BOULON			2			
45	92990–08600	WASHER, PLATE RONDELLE, PLATE			2			
46	90185–08057	NUT, SELF-LOCKING ECROU,AUTO-BLOQUANT			2			
47	90201–08MA4	WASHER, PLATE RONDELLE, PLATE			2			

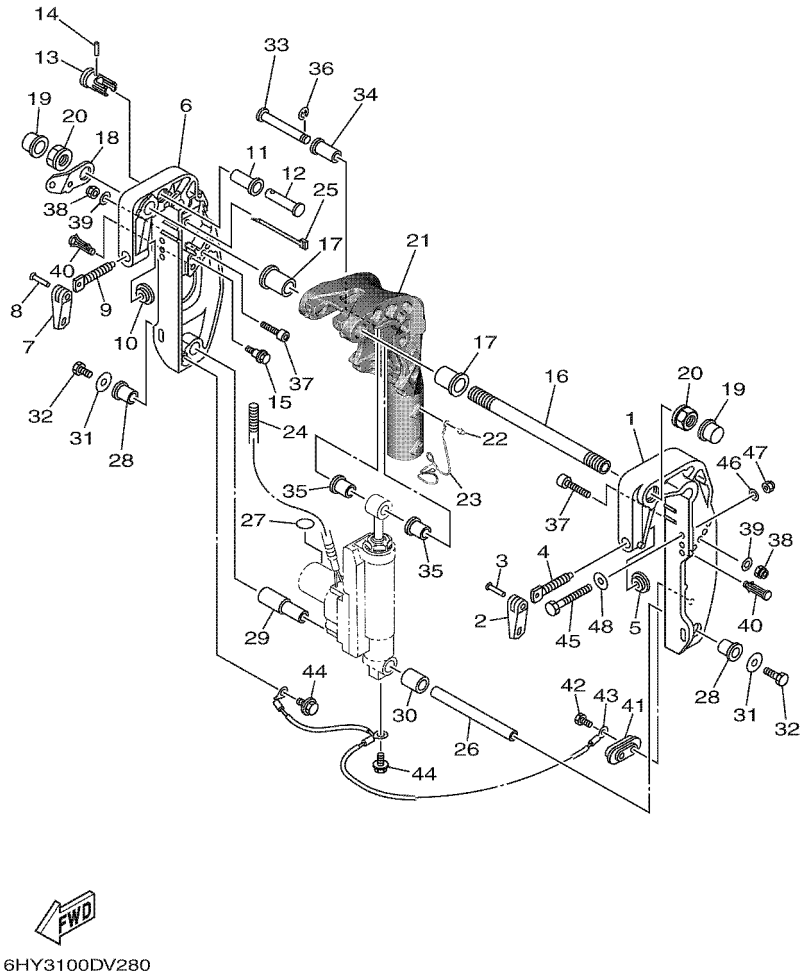

FIG. 29 BRACKET 2 — SUPPORT 2

REF. NO.	PART NO. N° PIECES	DESCRIPTION DESCRIPTION	MHB	WHB	EB	PB		REMARKS REMARQUES
1	69A–43111–01–8D	BRACKET, CLAMP 1 PRESSE 1				1		
2	6E0–43118–01	HANDLE, TRANSOM CLAMP POIGNEE DE VIS DE PRESSE				1		
3	90243–04M01	PIN GOUPILLE				1		
4	6E7–43116–00	SCREW, TRANSOM CLAMP VIS DE PRESSE				1		
5	648–43114–01	PAD, TRANSOM CLAMP RONDELLE D'APPUI				1		
6	69A–43112–02–8D	BRACKET, CLAMP 2 PRESSE 2				1		
7	6E0–43118–01	HANDLE, TRANSOM CLAMP POIGNEE DE VIS DE PRESSE				1		
8	90243–04M01	PIN GOUPILLE				1		
9	6E7–43116–00	SCREW, TRANSOM CLAMP VIS DE PRESSE				1		
10	648–43114–01	PAD, TRANSOM CLAMP RONDELLE D'APPUI				1		
11	6FM–43189–00	BUSHING COUSSINET				1		
12	65W–43191–00	SHAFT, STOPPER AXE, BUTEE				1		
13	6FM–43192–00	KNOB, STOPPER BOUTON, BUTEE DE RELEVAGE				1		
14	91690–30018	PIN, SPRING AGRAFFE				1		
15	90109–06MA1	BOLT BOULON				1		
16	69A–43131–00	BOLT, CLAMP BRACKET BOULON, PRESSE				1		FOR REMOTE CONTROL FOR REMOTE CONTROL
17	90386–22MA4	BUSH DOUILLE				2		
18	69A–43113–00	PLATE, CLAMP BRACKET PLAQUETTE, PRESSE				1		
19	6G5–43145–01	CAP, CLAMP BRACKET CAPUCHON, PRESSE				2		
20	90185–22043	NUT, SELF-LOCKING ECROU,AUTO-BLOQUANT				2		
21	6HY–43311–00–8D	BRACKET, SWIVEL 1 SUPPORT, PIVOT 1				1		S(16.7") S(16.7")
	6HY–43311–10–8D	BRACKET, SWIVEL 1 SUPPORT, PIVOT 1				1		L(21.7") L(21.7")
22	93700–06004	NIPPLE, GREASE PION				1		
23	6FM–82127–00	WIRE, LEAD 2 FIL 2				1		
24	90446–14MH7	HOSE (L560) DURITE (L560)				1		
25	90465–13M97	CLAMP BRIDE				1		
26	69G–43818–00	PIN, LOWER SHOCK MOUNT AXE, INFERIEUR AMORTISSEUR				1		

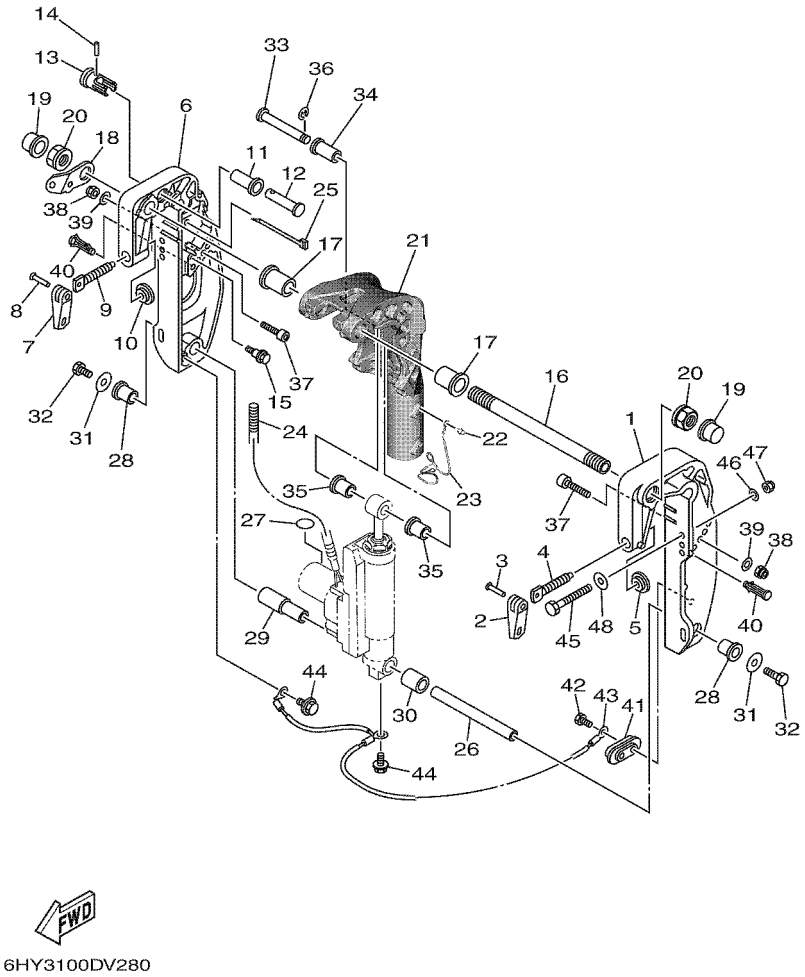

FIG. 29 BRACKET 2 — SUPPORT 2

REF. NO.	PART NO. N° PIECES	DESCRIPTION DESCRIPTION	MHB	WHB	EB	PB		REMARKS REMARQUES
27	69A–43155–00	MARK 1 ETIQUETTE 1				1		
28	90386–16MA7	BUSH DOUILLE				2		
29	90386–16MA8	BUSH DOUILLE				1		
30	90387–16M02	COLLAR COLLERETTE				1		
31	90201–08M00	WASHER, PLATE RONDELLE, PLATE				2		
32	97080–08016	BOLT BOULON				2		
33	90249–12M36	PIN GOUPILLE				1		
34	90381–12M10	BUSH, SOLID DOUILLE, SOLIDE				1		
35	90381–12M11	BUSH, SOLID DOUILLE, SOLIDE				2		
36	99080–10600	CIRCLIP CIRCLIP				1		
37	90110–08121	BOLT, HEXAGON SOCKET HEAD BOULON, TETE HEXAGONALE CREUSE				2		
38	90185–08057	NUT, SELF-LOCKING ECROU,AUTO-BLOQUANT				2		
39	92990–08600	WASHER, PLATE RONDELLE, PLATE				2		
40	90338–08M19	PLUG PLOT				4		S(16.7") S(16.7")
	90338–08M19	PLUG PLOT				2		L(21.7") L(21.7")
41	65W–45251–00	ANODE ANODE				1		
42	90101–06020	BOLT BOULON				2		
43	63V–82127–00	WIRE, LEAD 2 FIL 2				1		
44	97E95–06510	BOLT, HEXAGON W/W DEEP RECESS VIS HEXAGONAL AVC RONDELLE				2		
45	90101–08M88	BOLT BOULON				4		
46	92990–08600	WASHER, PLATE RONDELLE, PLATE				4		
47	90185–08057	NUT, SELF-LOCKING ECROU,AUTO-BLOQUANT				4		
48	90201–08MA4	WASHER, PLATE RONDELLE, PLATE				4		

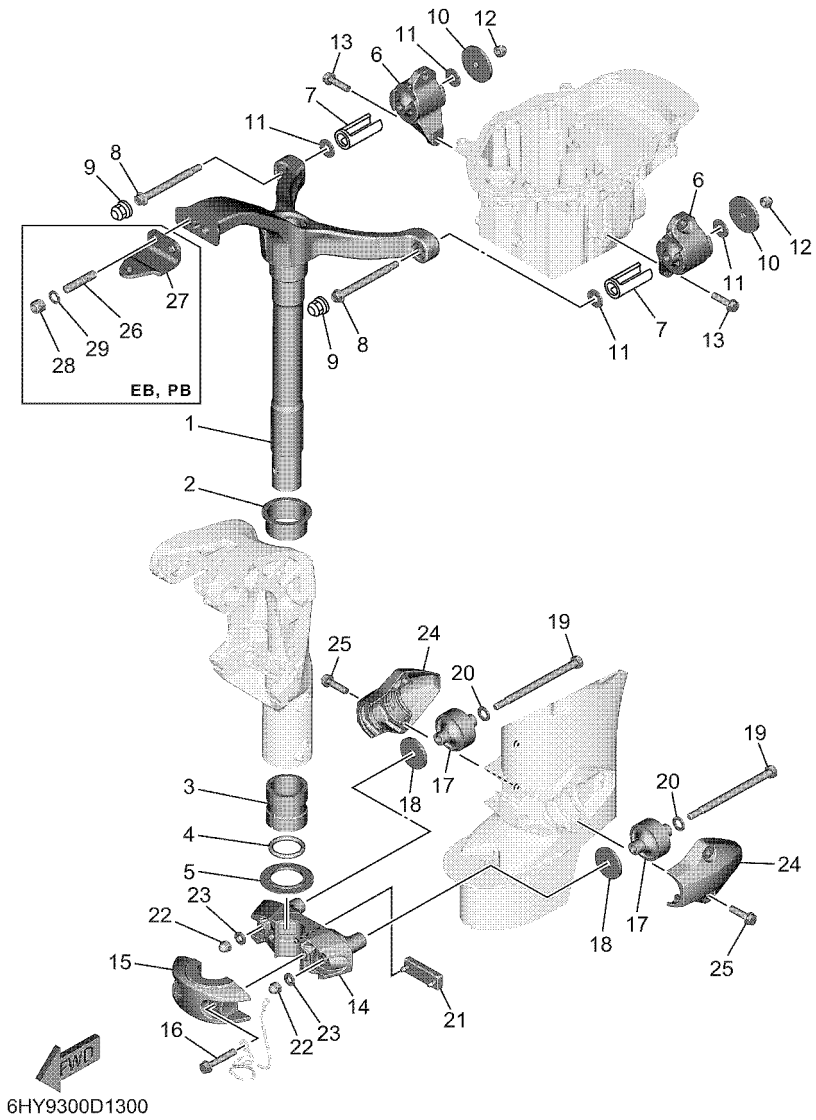

FIG. 30 BRACKET 3 — SUPPORT 3

REF. NO.	PART NO. N° PIECES	DESCRIPTION DESCRIPTION	MHB	WHB	EB	PB		REMARKS REMARQUES
1	6FM–42511–00–8D	BRACKET, STEERING CADRE, DIRECTION	1	1	1	1		S(16.7") S(16.7")
	6FM–42511–10–8D	BRACKET, STEERING CADRE, DIRECTION	1	1	1	1		L(21.7") L(21.7")
2	90381–45001	BUSH, SOLID DOUILLE, SOLIDE	1	1	1	1		
3	90386–38M32	BUSH DOUILLE	1	1	1	1		
4	93210–37MH7	O-RING JOINT TORIQUE	1	1	1	1		
5	90386–38002	BUSH DOUILLE	1	1	1	1		
6	6FM–44514–10–CA	MOUNT DAMPER, UPPER SIDE SILENT-BLOC, SUPERIEUR LATERAL	2	2	2	2		
7	6FM–44532–00	STOPPER, UPPER MOUNT PLAQUETTE	2	2	2	2		
8	90109–08241	BOLT BOULON	2	2	2	2		
9	66T–44194–10	CAP CAPUCHON	2	2	2	2		
10	90201–08120	WASHER, PLATE RONDELLE, PLATE	2	2	2	2		
11	90201–09014	WASHER, PLATE RONDELLE, PLATE	4	4	4	4		
12	95380–08800	NUT, CROWN ECROU, BORGNE	2	2	2	2		
13	97E95–08530	BOLT, HEXAGON W/W DEEP RECESS VIS HEXAGONAL AVC RONDELLE	4	4	4	4		
14	6FM–44551–00–8D	HOUSING, LOWER MOUNT RUBBER 1 BOITIER, SILENT-BLOC INFERIEUR	1	1	1	1		
15	6FM–44552–00–8D	HOUSING, LOWER MOUNT RUBBER 2 BOITIER, SILENT-BLOC INFERIEUR	1	1	1	1		
16	97E95–08545	BOLT, HEXAGON W/W DEEP RECESS VIS HEXAGONAL AVC RONDELLE	2	2	2	2		
17	6FM–44555–11	MOUNT DAMPER, LOWER SIDE SILENT-BLOC, INFERIEUR LATERAL	2	2	2	2		
18	90201–10077	WASHER, PLATE RONDELLE, PLATE	2	2	2	2		
19	90101–08M02	BOLT BOULON	2	2	2	2		
20	92995–10600	WASHER RONDELLE	2	2	2	2		
21	6FM–44575–01	DAMPER, LOWER MOUNT RUBBER SILENT-BLOC, INFERIEUR	1	1	1	1		S(16.7") S(16.7")
	6E5–44575–01	DAMPER, LOWER MOUNT RUBBER SILENT-BLOC, INFERIEUR	1	1	1	1		L(21.7") L(21.7")
22	95380–08800	NUT, CROWN ECROU, BORGNE	2	2	2	2		
23	90201–08M08	WASHER, PLATE RONDELLE, PLATE	2	2	2	2		
24	6FM–44553–00–8D	COVER, LOWER MOUNT COUVERCLE, SUSPENSION INFERIEU	2	2	2	2		
25	97E95–08530	BOLT, HEXAGON W/W DEEP RECESS VIS HEXAGONAL AVC RONDELLE	4	4	4	4		

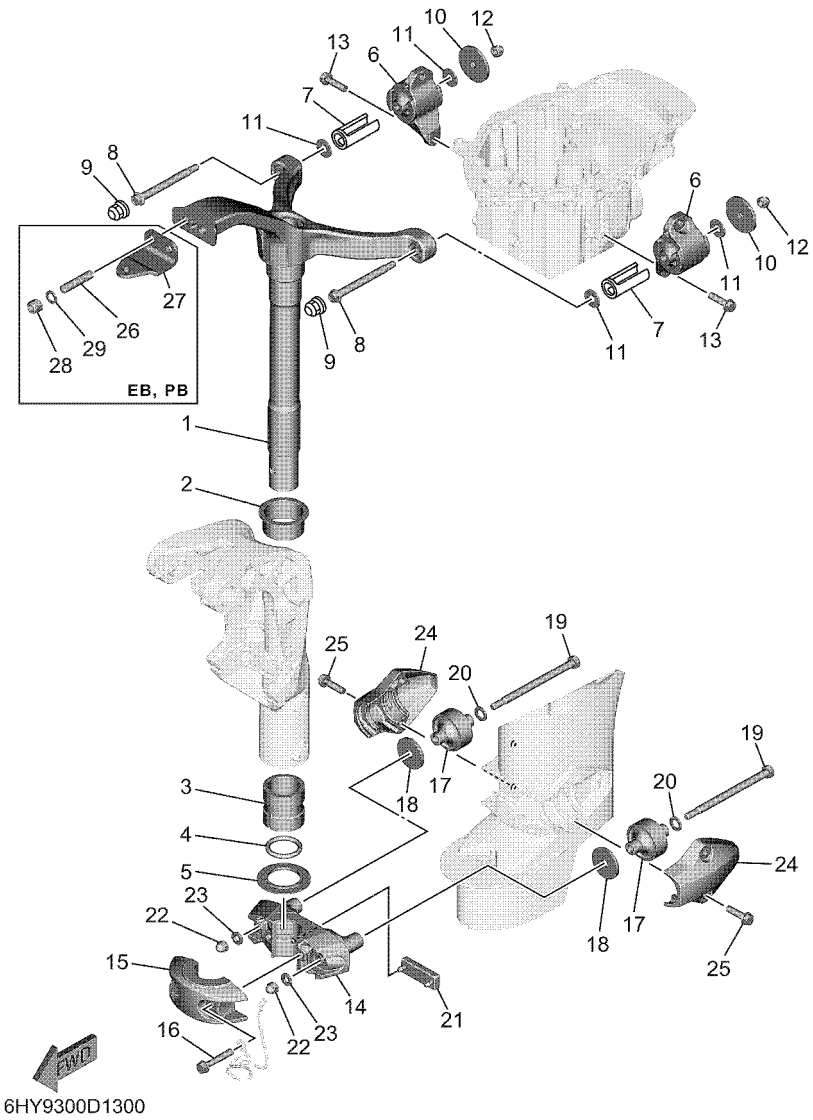

FIG. 30 BRACKET 3 — SUPPORT 3

REF. NO.	PART NO. N° PIECES	DESCRIPTION DESCRIPTION	MHB	WHB	EB	PB		REMARKS REMARQUES
26	90116–10064	BOLT, STUD GOUJON			2	2		
27	65W–48511–01	HOOK, STEERING ATTACHE, DIRECTION			1	1		
28	90185–10027	NUT, SELF-LOCKING ECROU,AUTO-BLOQUANT			2	2		
29	90201–10049	WASHER, PLATE RONDELLE, PLATE			2	2		

FIG. 31 POWER TRIM & TILT ASSY — PUISSANCE PARER ET INCLINER

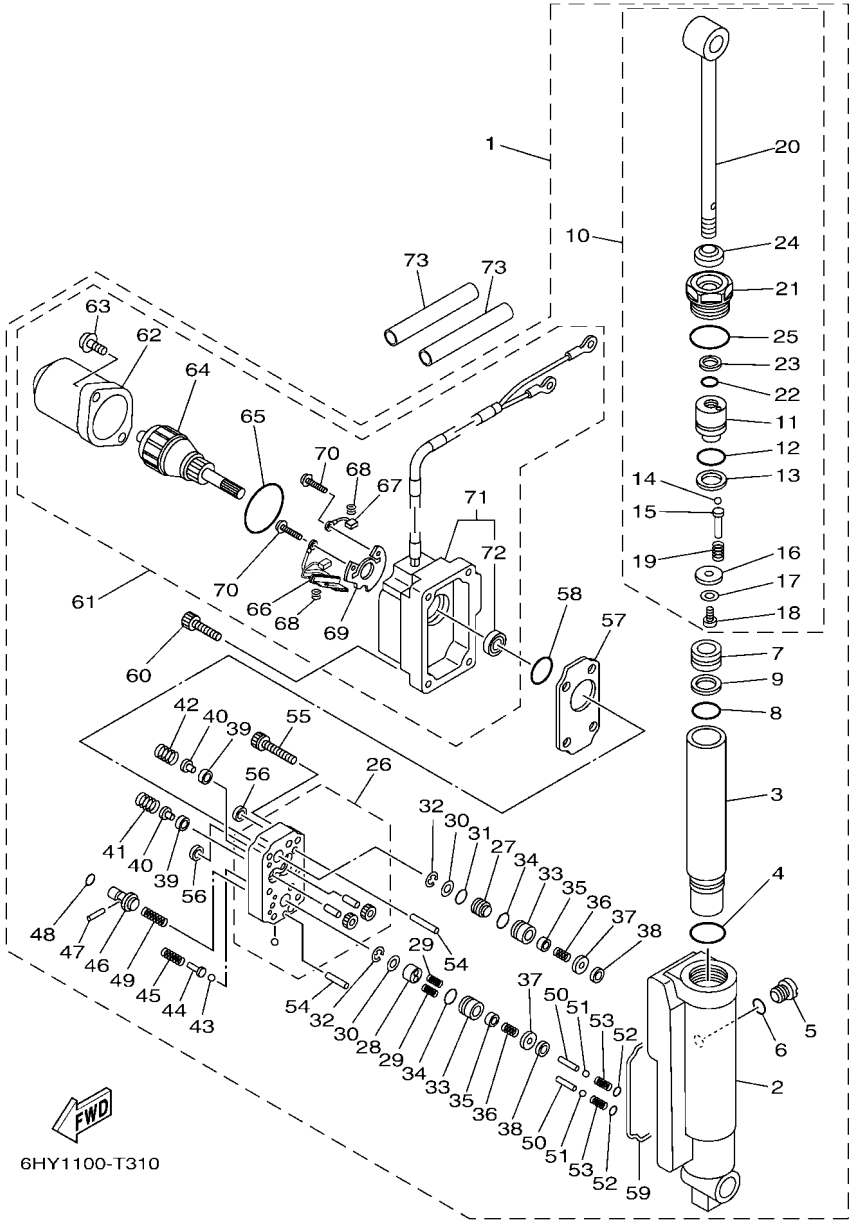

REF. NO.	PART NO. N° PIECES	DESCRIPTION DESCRIPTION	MHB	WHB	EB	PB		REMARKS REMARQUES
1	6HY–43840–00–8D	POWER TILT ASSY PUISSANCE INCLINER (ENS.)				1		
2	6HY–4380K–00	.CYLINDER, TILT SUB ASSY .CYLINDRE				1		
3	6AH–22471–00	.CYLINDER, SHOCK ABSORBER .CYLINDRE, AMORTISSEUR				1		
4	93210–320A7	.O-RING .JOINT TORIQUE				1		
5	6H1–4388E–11	.PLUG, TAPER SCREW .BOUCHON				1		
6	93210–07003	.O-RING .JOINT TORIQUE				1		
7	6AH–43814–00	.PISTON, FREE .PISTON				1		
8	93210–24709	.O-RING .JOINT TORIQUE				1		
9	6C5–43871–00	.RING, BACK UP .SEGMENT				1		
10	6AH–43810–00	.TILT PISTON SUB ASSY .INCLINER PISTON AUXILIAIRE(ENS				1		
11	6AH–4380D–00	..PISTON COMP. ..PISTON COMP.				1		
12	93210–24709	..O-RING ..JOINT TORIQUE				1		
13	6C5–43871–00	..RING, BACK UP ..SEGMENT				1		
14	93501–08001	..BALL ..BILLE				5		
15	6AH–4386A–00	..PIN, ABSORBER VALVE ..GOUPILLE, SOUPAPE				5		
16	6AH–4385E–00	..PLATE, PISTON ..PLAQUE DE PISTON				1		
17	92902–06200	..WASHER ..RONDELLE				1		
18	6AH–43878–00	..BOLT, SOCKET ..BOULON				1		
19	6AH–43857–00	..SPRING, ABSORBER VALVE ..RESSORT				5		
20	6AH–43801–00	..ROD ..TIGE				1		
21	6AH–43811–00	..SCREW, CYLINDER END ..VIS, CYLINDRE RACCORD				1		
22	6H1–43866–01	..O-RING ..JOINT TORIQUE				1		
23	69A–43871–00	..RING, BACK UP ..SEGMENT				1		
24	69A–43812–00	..SEAL, DUST ..JOINT				1		
25	62X–43862–00	..O-RING ..JOINT TORIQUE				1		
26	6AH–43830–00	.GEAR PUMP ASSY .POMPE A PIGNON (ENS.)				1		
27	69A–43841–00	.PISTON, SHUTTLE .PISTON				1		

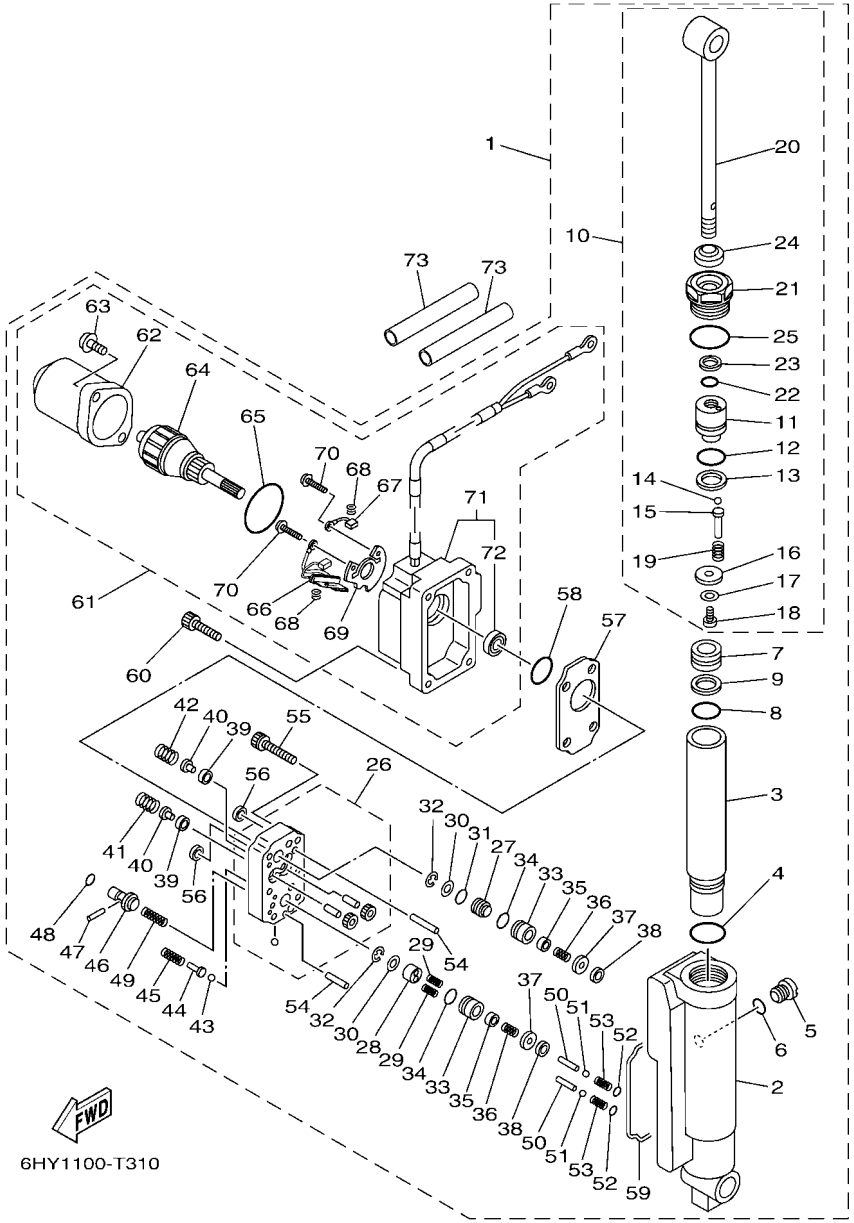

FIG. 31 POWER TRIM & TILT ASSY — PUISSANCE PARER ET INCLINER

REF. NO.	PART NO. N° PIECES	DESCRIPTION DESCRIPTION	MHB	WHB	EB	PB		REMARKS REMARQUES
28	69A–4384M–00	.PISTON, SHUTTLE 2 .PISTON 2				1		
29	62Y–43894–00	.SPRING, SHUTTLE RETURN .RESSORT				2		
30	69A–4384F–00	.SEAL, MAIN VALVE .JOINT				2		
31	6H1–43883–00	.O-RING .JOINT TORIQUE				1		
32	99002–03600	.CIRCLIP .CIRCLIP				2		
33	69G–4382G–00	.VALVE SEAT .JEU DE POINTEAUX				2		
34	93210–12N52	.O-RING .JOINT TORIQUE				2		
35	6T4–43808–00	.SEAT VALVE COMP. 1 .SIEGE VALVE COMP. 1				2		
36	69G–43853–00	.SPRING, MAIN VALVE .RESSORT				2		
37	69G–4388F–00	.SPACER .ENTRETOISE				2		
38	69J–4381C–00	.FILTER 3 .FILTRE 3				2		
39	6H1–4384G–11	.SEAL, RELIEF VALVE .JOINT				2		
40	6H1–43844–10	.PIN, VALVE SUPPORT .GOUPILLE				2		
41	6F2–43855–00	.SPRING, UP RELIEF .RESSORT				1		
42	6H1–43856–10	.SPRING, DOWN RELIEF .RESSORT				1		
43	93501–08001	.BALL .BILLE				2		
44	69A–4386A–00	.PIN, ABSORBER VALVE .GOUPILLE, SOUPAPE				2		
45	69A–43824–00	.SPRING, DOWN RELIEF 2 .RESSORT 2				2		
46	69A–43848–10	.ROD, MANUAL RELEASE .TIGE				1		
47	93602–15250	.PIN, DOWEL .GOUJON				1		
48	93210–06001	.O-RING .JOINT TORIQUE				1		
49	6AH–43854–00	.SPRING, MANUAL RELEASE .RESSORT				1		
50	69A–4381G–00	.PIN 1 .GOUPILLE 1				2		
51	93501–08001	.BALL .BILLE				2		
52	6H1–43883–00	.O-RING .JOINT TORIQUE				2		
53	69A–4384H–00	.SPRING .RESSORT				2		
54	93606–14081	.PIN, DOWEL .GOUPILLE				2		

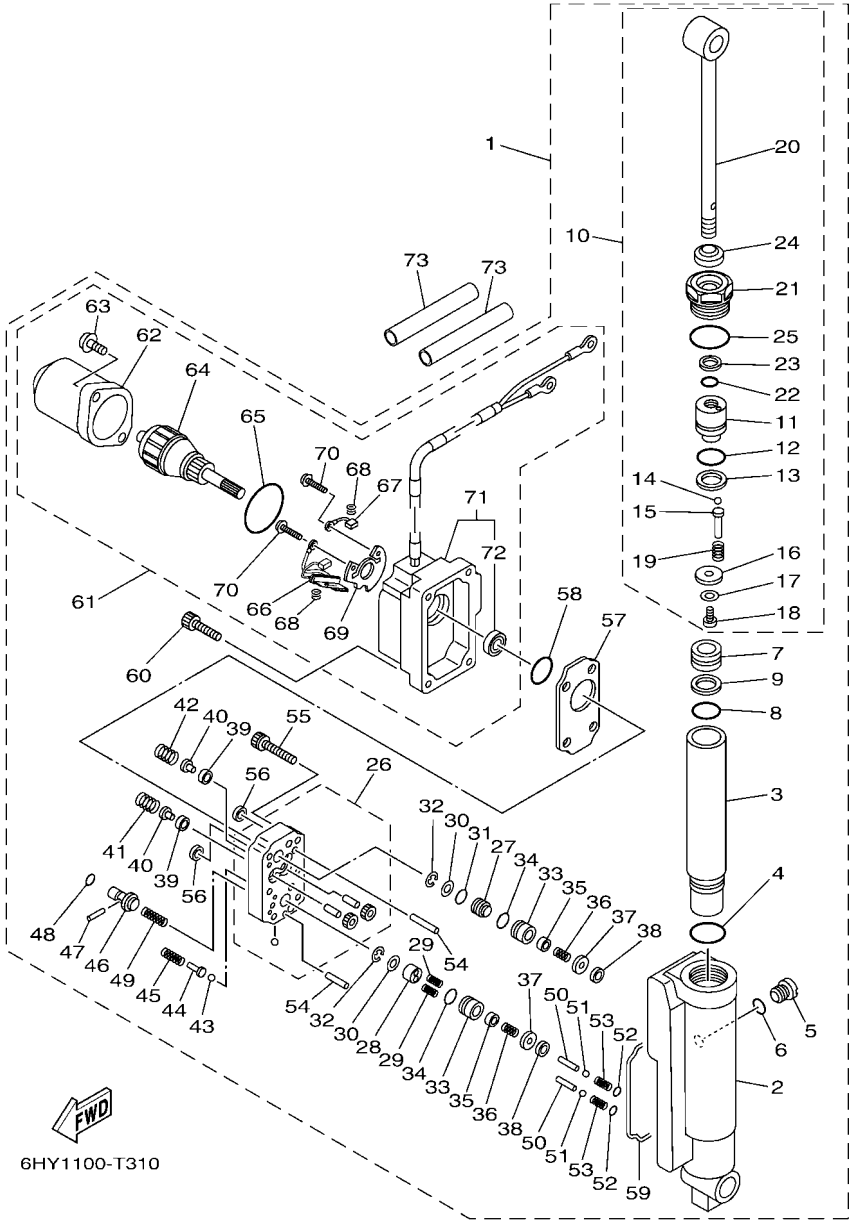

FIG. 31 POWER TRIM & TILT ASSY — PUISSANCE PARER ET INCLINER

REF. NO.	PART NO. N° PIECES	DESCRIPTION DESCRIPTION	MHB	WHB	EB	PB		REMARKS REMARQUES
55	91312–05025	.BOLT, HEXAGON SOCKET HEAD .BOULON, TETE HEXAGONALE CREUSE				6		
56	69J–4381C–00	.FILTER 3 .FILTRE 3				2		
57	6AH–4381J–00	.PLATE .PLAQUE				1		
58	N35–43862–10	.O-RING .JOINT TORIQUE				1		
59	69A–23129–00	.GASKET, DRAIN PLUG .JOINT, PLOT DE VIDANGE				1		
60	69A–43878–00	.BOLT, SOCKET .BOULON				4		
61	6HY–43880–00	.MOTOR ASSY .MOTEUR (ENS.)				1		
62	6AH–43804–00	..STATOR ASSY ..STATOR (ENS.)				1		
63	67C–43879–10	..SCREW, WITH WASHER ..VIS, AVEC RONDELLE				2		
64	67C–43805–11	..ARMATURE ASSY ..INDUIT (ENS.)				1		
65	67C–43862–10	..O-RING ..JOINT TORIQUE				1		
66	67C–82181–10	..CIRCUIT BREAKER COMP. ..RUPTEUR COMPLET				1		
67	67C–43892–10	..BRUSH 2 ..BALAI 2				1		
68	67C–4386K–10	..SPRING, BRUSH ..RESSORT, BALAI				2		
69	67C–4380F–10	..PLATE, BRUSH HOLDER ..PLAQUE				1		
70	97602–04316	..SCREW, PAN HEAD WITH WASHER ..VIS, AVEC RONDELLE				2		
71	6HY–43881–01	..FRAME, END ..BATI				1		
72	67C–43882–10	...OIL SEAL ...JOINT SPI				1		
73	90446–15003	HOSE (L100) DURITE (L100)				2		

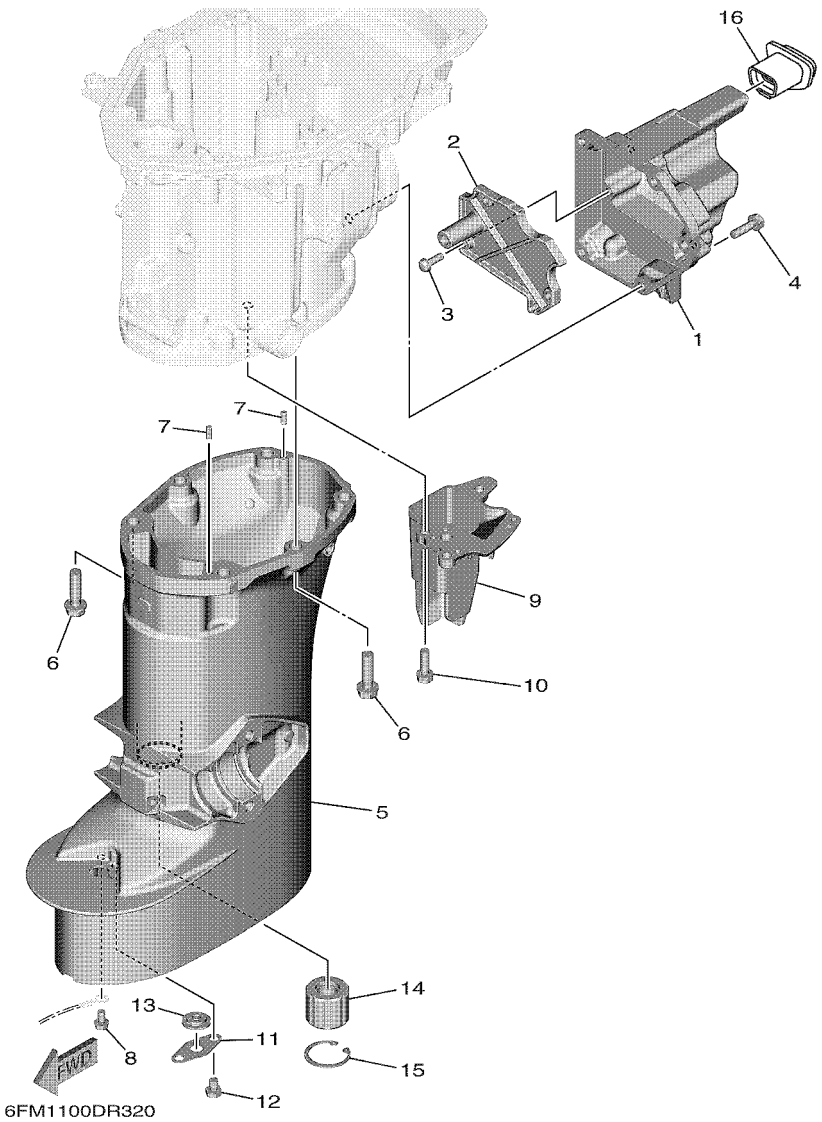

FIG. 32 UPPER CASING FOURREAU

REF. NO.	PART NO. N° PIECES	DESCRIPTION DESCRIPTION	MHB	WHB	EB	PB		REMARKS REMARQUES
1	6FM–14731–00–CA	CHAMBER 1 CHAMBRE 1	1	1	1	1		
2	6FM–45126–00	PLATE, SEAL DAMPER PLAQUETTE	1	1	1	1		
3	97980–05216	SCREW, WITH WASHER VIS, AVEC RONDELLE	3	3	3	3		
4	90105–06M07	BOLT, FLANGE BOULON, A COLLERETTE	5	5	5	5		
5	6FM–45111–00–8D	CASING, UPPER FOURREAU	1	1	1			S(16.7") S(16.7")
	6HY–45111–00–8D	CASING, UPPER FOURREAU				1		S(16.7") S(16.7")
	6FM–45111–10–8D	CASING, UPPER FOURREAU	1	1	1	1		L(21.7") L(21.7")
6	97E95–08530	BOLT, HEXAGON W/W DEEP RECESS VIS HEXAGONAL AVC RONDELLE	6	6	6	6		
7	93604–10M03	PIN, DOWEL CLAVETTE	2	2	2	2		
8	97595–05510	BOLT HEX. HEAD VIS HEXAGONAL AVC RONDELLE	1	1	1	1		
9	6FM–14711–00–CA	MUFFLER 1 POT D'ECHAPPEMENT 1	1	1	1	1		
10	90105–06M07	BOLT, FLANGE BOULON, A COLLERETTE	3	3	3	3		
11	68T–45321–00	PLATE PLAQUETTE	1	1	1	1		L(21.7") L(21.7")
12	97D95–06008	BOLT, HEXAGON DEEP RECESS VIS HEXAGONAL	1	1	1	1		L(21.7") L(21.7")
13	90480–14M54	GROMMET PASSE-FIL	1	1	1	1		L(21.7") L(21.7")
14	6L2–45318–00	BUSHING, DRIVE SHAFT DOUILLE, ARBRE MOTEUR	1	1	1	1		L(21.7") L(21.7")
15	93420–30042	CIRCLIP CIRCLIP, TYPE S	1	1	1	1		L(21.7") L(21.7")
16	6FM–42769–01	SEAL, RUBBER BOURRELET, CAOUTCHOUC	1	1	1	1		

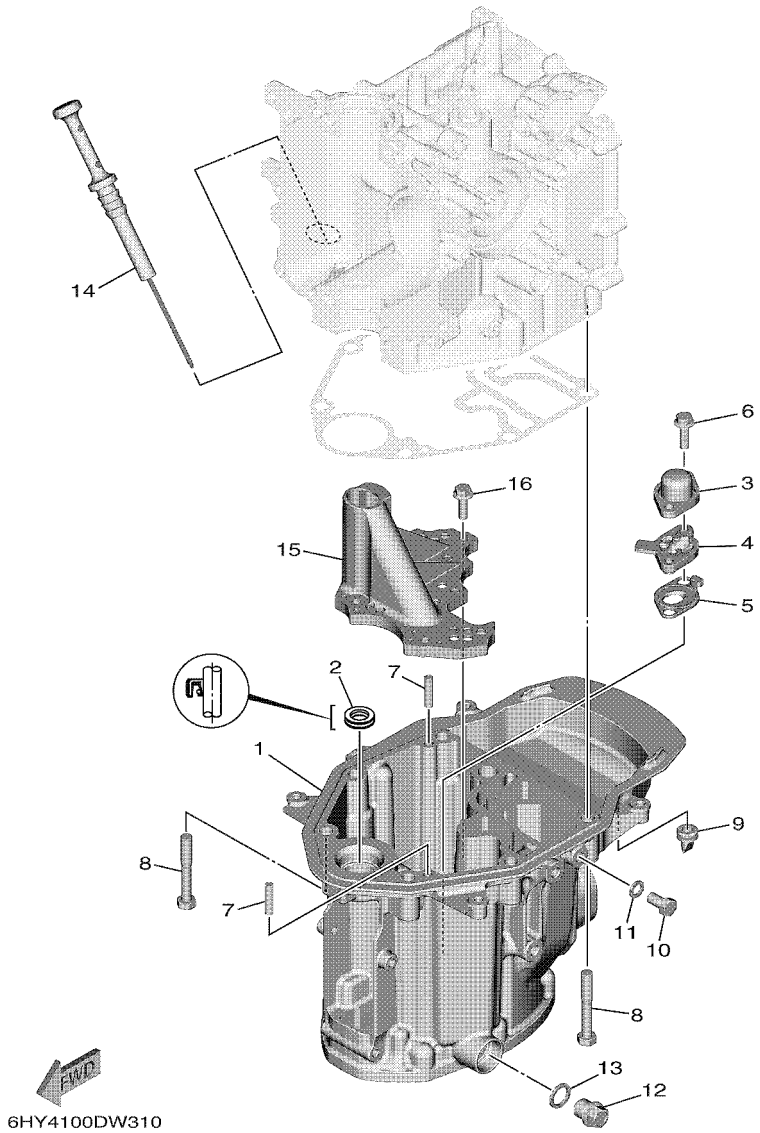

FIG. 33 OIL PAN — VENTILATEUR D'HUILE

REF. NO.	PART NO. N° PIECES	DESCRIPTION DESCRIPTION	MHB	WHB	EB	PB		REMARKS REMARQUES
1	6FM–15311–01–CA	OIL PAN VENTILATEUR D'HUILE	1	1	1	1		
2	93101–13001	OIL SEAL JOINT SPY	1	1	1	1		
3	6FM–13411–00	STRAINER, OIL FILTRE, HUILE	1	1	1	1		
4	6FM–13421–00	STRAINER 2 FILTRE 2	1	1	1	1		
5	6FM–13415–00	SEAL, OIL STRAINER JOINT, FILTRE A HUILE	1	1	1	1		
6	95822–06025	BOLT, FLANGE BOULON, A COLLERETTE	2	2	2	2		
7	93606–25M00	PIN, DOWEL GOUPILLE	2	2	2	2		
8	97E75–08555	BOLT, HEXAGON W/W DEEP RECESS VIS HEXAGONAL AVC RONDELLE	6	6	6	6		
9	65W–42717–00	RUBBER, SEAL 2 JOINT EN CAOUTCHOUC 2	1	1	1	1		
10	97D95–08014	BOLT, HEXAGON DEEP RECESS VIS HEXAGONAL	1	1	1	1		
11	90430–08143	GASKET JOINT	1	1	1	1		
12	90340–14M06	PLUG, STRAIGHT SCREW PLOT, FILETE DROIT	1	1	1	1		
13	90430–14M09	GASKET JOINT	1	1	1	1		
14	6FM–15362–00	PLUG, OIL LEVEL PLOT, NIVEAU D'HUILE	1	1	1	1		
15	6FM–13317–10	PLATE, BAFFLE SEPARATEUR	1	1	1	1		
16	95817–06025	BOLT, FLANGE BOULON, A COLLERETTE	3	3	3	3		

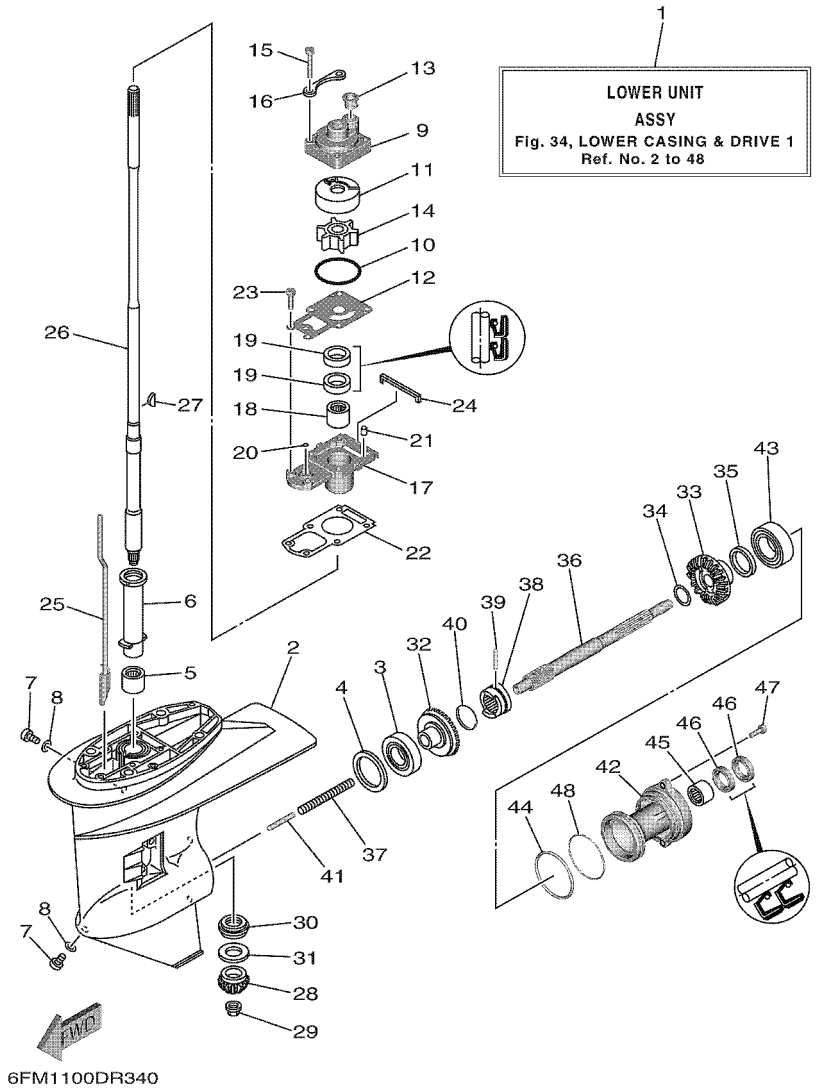

FIG. 34 LOWER CASING & DRIVE 1 — BOITIER D'HELICE TRANSMISSION1

REF. NO.	PART NO. N° PIECES	DESCRIPTION DESCRIPTION	MHB	WHB	EB	PB		REMARKS REMARQUES
1	6FM–45300–03–8D	LOWER UNIT ASSY UNITE INFERIEURE (ENS.)	1	1	1	1		S(16.7") S(16.7")
	6FM–45300–13–8D	LOWER UNIT ASSY UNITE INFERIEURE (ENS.)	1	1	1	1		L(21.7") L(21.7")
2	6L2–45311–02–8D	CASING, LOWER BOITIER D'HELICE	1	1	1	1		
3	93332–00005	BEARING ROULEMENT	1	1	1	1		
4	6L2–45567–00	SHIM (T:1.0MM) CALE (T;1.0MM)	1	1	1	1		UR UR
	6L2–45567–10	SHIM (T:1.1MM) CALE (T:1.1MM)	1	1	1	1		UR UR
	6L2–45567–20	SHIM (T:1.2MM) CALE (T:1.2MM)	1	1	1	1		UR UR
	6L2–45567–30	SHIM (T:1.3MM) CALE (T:1.3MM)	1	1	1	1		UR UR
	6L2–45567–40	SHIM (T:1.4MM) CALE (T:1.4MM)	1	1	1	1		UR UR
5	93315–220V9	BEARING ROULEMENT	1	1	1	1		
6	6L2–45536–00	SLEEVE, DRIVE SHAFT MANCHON, ARBRE MOTEUR	1	1	1	1		
7	90340–08002	PLUG, STRAIGHT SCREW PLOT, FILETE DROIT	2	2	2	2		
8	90430–08003	GASKET JOINT	2	2	2	2		
9	6L2–44311–01	HOUSING, WATER PUMP CORPS, POMPE A EAU	1	1	1	1		
10	93210–45161	O-RING JOINT TORIQUE	1	1	1	1		
11	6L2–44322–00	INSERT, CARTRIDGE CUVETTE	1	1	1	1		
12	6FM–44323–01	OUTER PLATE, CARTRIDGE PLAQUE EXTERIEURE	1	1	1	1		
13	6L2–44367–11	DAMPER, WATER SEAL 3 JOINT TUBE D'EAU 3	1	1	1	1		
14	6L2–44352–00	IMPELLER TURBINE	1	1	1	1		
15	97E95–06540	BOLT, HEXAGON W/W DEEP RECESS VIS HEXAGONAL AVC RONDELLE	4	4	4	4		
16	6L2–44328–00	PLATE PLAQUETTE	2	2	2	2		
17	6FM–45331–00–CA	HOUSING, BEARING FLASQUE, ROULEMENT	1	1	1	1		
18	93315–22004	BEARING ROULEMENT	1	1	1	1		
19	93101–20048	OIL SEAL JOINT SPY	2	2	2	2		
20	93210–06ME6	O-RING JOINT TORIQUE	1	1	1	1		
21	93604–12M07	PIN, DOWEL CLAVETTE	2	2	2	2		
22	6L2–45315–A0	PACKING, LOWER CASING JOINT, BOITIER D'HELICE	1	1	1	1		

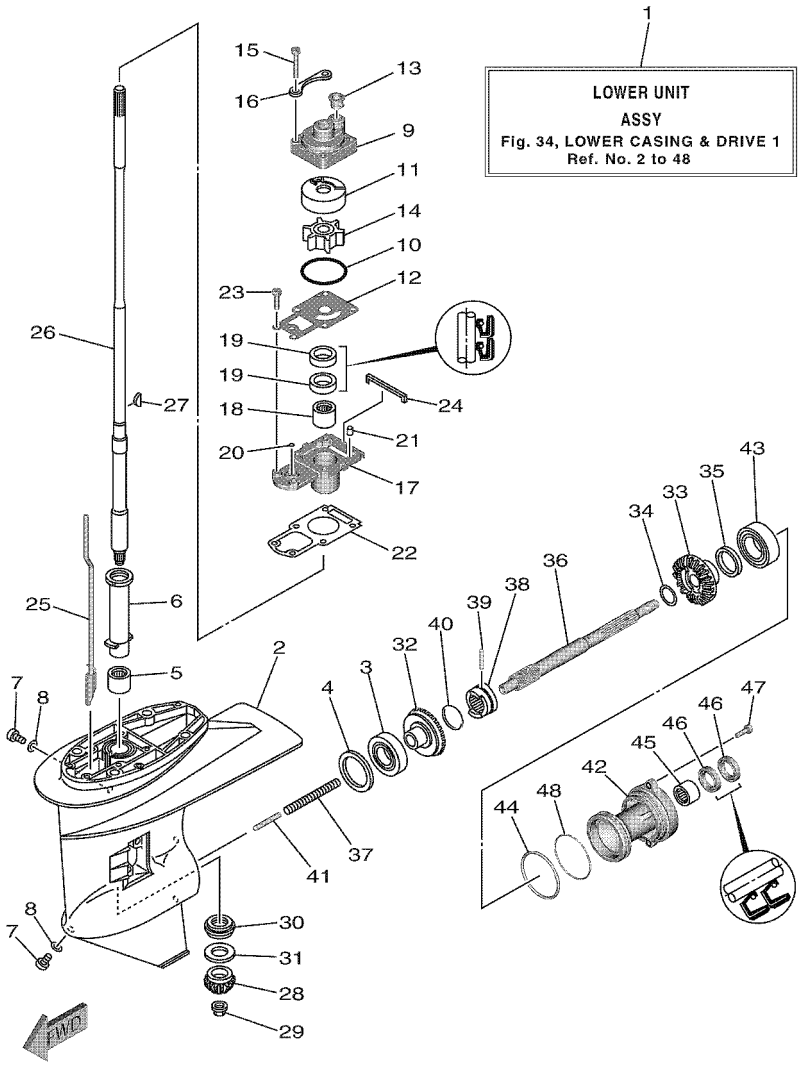

FIG. 34 LOWER CASING & DRIVE 1 — BOITIER D'HELICE TRANSMISSION1

REF. NO.	PART NO. N° PIECES	DESCRIPTION DESCRIPTION	MHB	WHB	EB	PB		REMARKS REMARQUES
23	97080–06020	BOLT BOULON	2	2	2	2		
24	6L2–45375–00	DAMPER, SEAL BOURRELET, CAOUTCHOUC	1	1	1	1		
25	6FM–44150–01	SHIFT CAM ASSY CAME D'INVERSION	1	1	1	1		S(16.7") S(16.7")
	6FM–44150–11	SHIFT CAM ASSY CAME D'INVERSION	1	1	1	1		L(21.7") L(21.7")
26	6FM–45510–00	DRIVE SHAFT ASSY ARBRE MOTEUR (ENS.)	1	1	1	1		S(16.7") S(16.7")
	6FM–45510–10	DRIVE SHAFT ASSY ARBRE MOTEUR (ENS.)	1	1	1	1		L(21.7") L(21.7")
27	90280–03024	KEY, WOODRUFF CLAVETTE, DEMI-LUNE	1	1	1	1		
28	6L2–45551–01	PINION (13T) PIGNON D'ATTAQUE (13D)	1	1	1	1		
29	90179–10M14	NUT ECROU	1	1	1	1		
30	93341–320U0	BEARING CERVEAUX DE DIRECTION	1	1	1	1		
31	6L2–45587–00	SHIM (T:1.5MM) CALE (T:1.5MM)	1	1	1	1		UR UR
	6L2–45587–10	SHIM (T:1.6MM) CALE (T:1.6MM)	1	1	1	1		UR UR
32	6FM–45560–00	GEAR 1 (27T) PIGNON 1 (27T)	1	1	1	1		
33	6FM–45571–00	GEAR 2 (27T) PIGNON 2 (27T)	1	1	1	1		
34	90201–20417	WASHER, PLATE RONDELLE, PLATE	1	1	1	1		
35	6L2–45577–00	SHIM (T:1.0MM) CALE (T:1.0MM)	1	1	1	1		UR UR
	6L2–45577–10	SHIM (T:1.1MM) CALE (T:1.1MM)	1	1	1	1		UR UR
	6L2–45577–20	SHIM (T:1.2MM) CALE (T:1.2MM)	1	1	1	1		UR UR
	6L2–45577–30	SHIM (T:1.3MM) CALE (T:1.3MM)	1	1	1	1		UR UR
36	65W–45611–00	SHAFT, PROPELLER ARBRE, HELICE	1	1	1	1		
37	90501–10065	SPRING, COMPRESSION RESSORT, COMPRESSION	1	1	1	1		
38	6FM–45631–00	CLUTCH, DOG CRABOT	1	1	1	1		
39	90250–05010	PIN, STRAIGHT GOUPILLE, DROITE	1	1	1	1		
40	648–45633–11	RING, CROSS PIN JONC, GOUPILLE CRABOT	1	1	1	1		
41	648–45635–00	PLUNGER, SHIFT POUSSOIR D'EMBRAYAGE	1	1	1	1		
42	6L2–45361–03–8D	CAP, LOWER CASING COUVERCLE, BOITIER D'HELICE	1	1	1	1		
43	93306–00612	BEARING ROULEMENT	1	1	1	1		

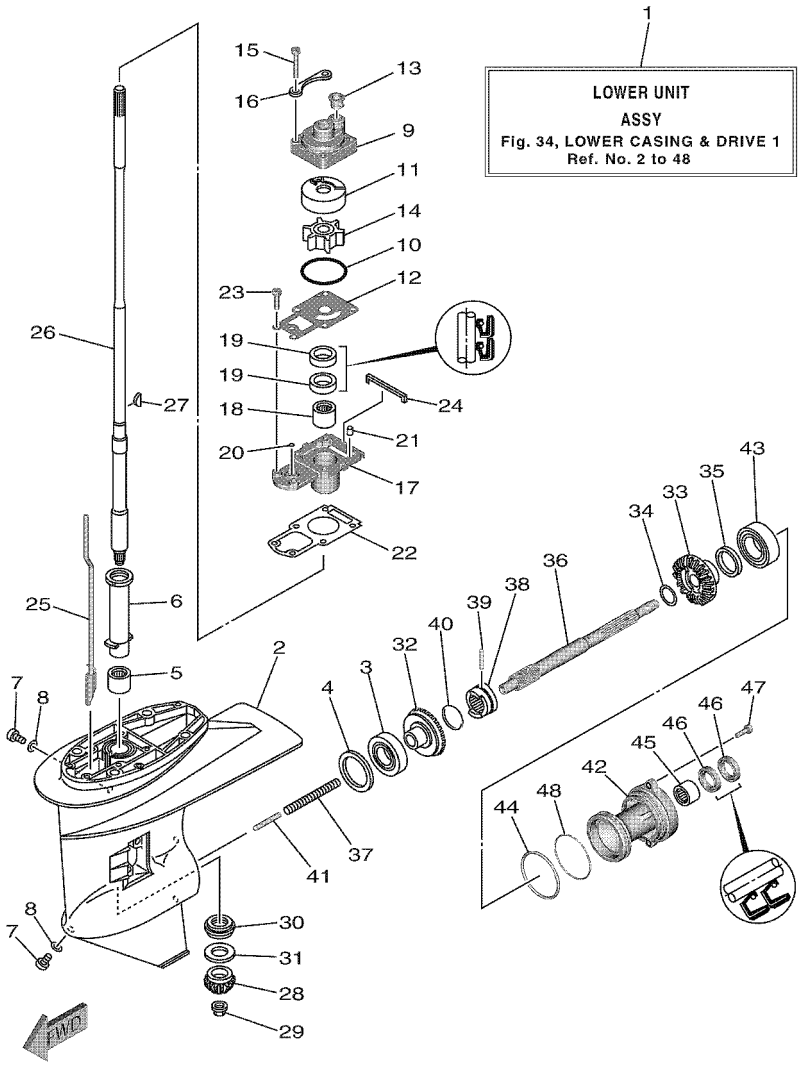

FIG. 34 LOWER CASING & DRIVE 1 — BOITIER D'HELICE TRANSMISSION1

REF. NO.	PART NO. N° PIECES	DESCRIPTION DESCRIPTION	MHB	WHB	EB	PB		REMARKS REMARQUES
44	93210–60MA3	O-RING JOINT TORIQUE	1	1	1	1		
45	93315–22004	BEARING ROULEMENT	1	1	1	1		
46	93101–20M07	OIL SEAL JOINT SPY	2	2	2	2		
47	97E95–06520	BOLT, HEXAGON W/W DEEP RECESS VIS HEXAGONAL AVC RONDELLE	2	2	2	2		
48	93210–60M99	O-RING JOINT TORIQUE	1	1	1	1		

FIG. 35 LOWER CASING & DRIVE 2 — BOITIER D'HELICE TRANSMISSION2

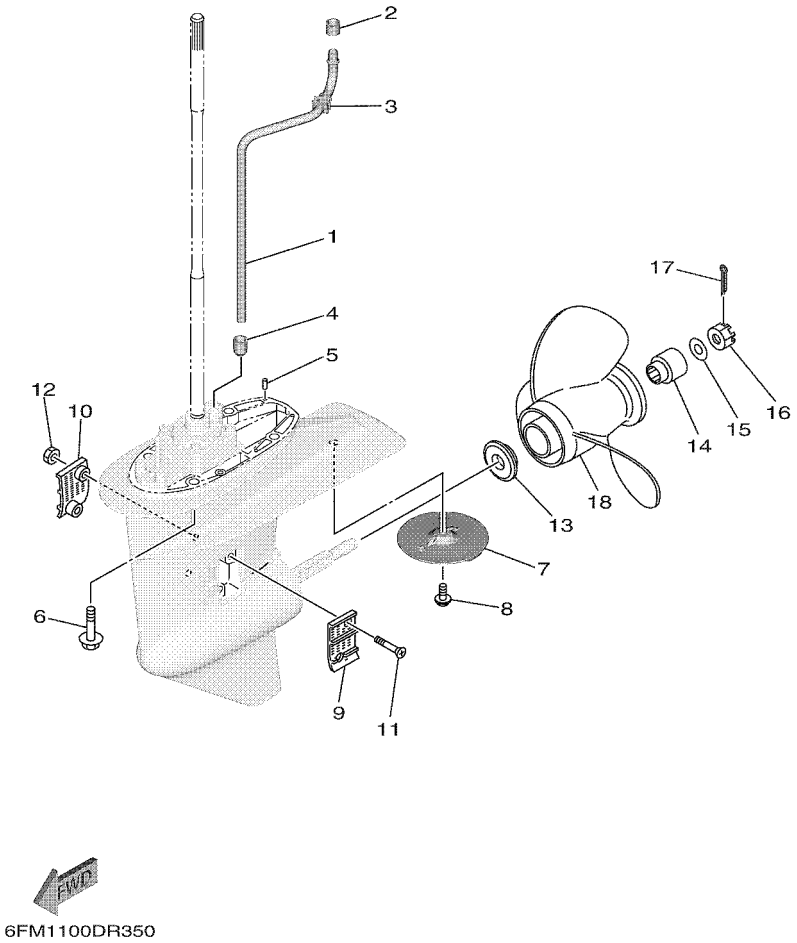

REF. NO.	PART NO. N° PIECES	DESCRIPTION DESCRIPTION	MHB	WHB	EB	PB		REMARKS REMARQUES
1	6FM–44361–00	TUBE, WATER 1 TUBE D'EAU 1	1	1	1	1		S(16.7") S(16.7")
	6FM–44361–10	TUBE, WATER 1 TUBE D'EAU 1	1	1	1	1		L(21.7") L(21.7")
2	682–44365–01	DAMPER, WATER SEAL 1 JOINT, TUBE D'EAU 1	1	1	1	1		
3	6AH–44365–01	DAMPER, WATER SEAL 1 JOINT, TUBE D'EAU 1	1	1	1	1		
4	6L2–44368–01	RUBBER, WATER SEAL 4 CAOUTCHOUC EAU JUNTA 4	1	1	1	1		
5	93604–12M07	PIN, DOWEL CLAVETTE	2	2	2	2		
6	97E95–10535	BOLT, HEXAGON W/W DEEP RECESS VIS HEXAGONAL AVC RONDELLE	4	4	4	4		
7	664–45371–01	TAB-TRIM ANODE DERIVE	1	1	1	1		
8	90105–08M02	BOLT, FLANGE BOULON, A COLLERETTE	1	1	1	1		
9	6L2–45214–00	COVER, WATER INLET 1 GRILLE, ENTREE D'EAU 1	1	1	1	1		
10	6L2–45215–00	COVER, WATER INLET 2 GRILLE, ENTREE D'EAU 2	1	1	1	1		
11	90151–05M05	SCREW, COUNTERSUNK VIS, TETE NOYEE	2	2	2	2		
12	90185–05002	NUT, NYLON ECROU,AUTO-BLOQUANT	2	2	2	2		
13	6L2–45987–01	SPACER 1 ENTRETOISE 1	1	1	1	1		
14	689–45997–00	SPACER 2 ENTRETOISE 2	1	1	1	1		
15	92990–14200	WASHER, PLAIN RONDELLE, PLATE	1	1	1	1		
16	90171–14013	NUT, CASTLE ECROU, CRENELE	1	1	1	1		
17	91490–30025	PIN. COTTER GOUPILLE	1	1	1	1		
18	664–45943–01	PROPELLER (3X9-7/8"X8"-F) HELICE (3X9-7/8"X8"-F)	1	1	1	1		UR UR
	664–45941–01	PROPELLER (3X9-7/8"X9"-F) HELICE (3X9-7/8"X9"-F)	1	1	1	1		UR UR
	62C–45941–00	PROPELLER (3X9-7/8"X10"-F) HELICE (3X9-7/8"X10"-F)	1	1	1	1		UR UR
	664–45945–00	PROPELLER (3X9-7/8"X10-1/2"-F) HELICE (3X9-7/8"X10-1/2"-F)	1	1	1	1		UR UR
	664–45947–01	PROPELLER (3X9-7/8"X11-1/4"-F) HELICE (3X9-7/8"X11-1/4"-F)	1	1	1	1		UR UR
	664–45954–01	PROPELLER (3X9-7/8"X12"-F) HELICE (3X9-7/8"X12"-F)	1	1	1	1		UR UR
	664–45972–00	PROPELLER (3X9-1/8"X12"-F) HELICE (3X9-1/8"X12"-F)	1	1	1	1		UR UR
	664–45949–02	PROPELLER (3X9-7/8"X13"-F) HELICE (3X9-7/8"X13"-F)	1	1	1	1		UR UR
	664–45970–00	PROPELLER (3X9-1/8"X13"-F) HELICE (3X9-1/8"X13"-F)	1	1	1	1		UR UR

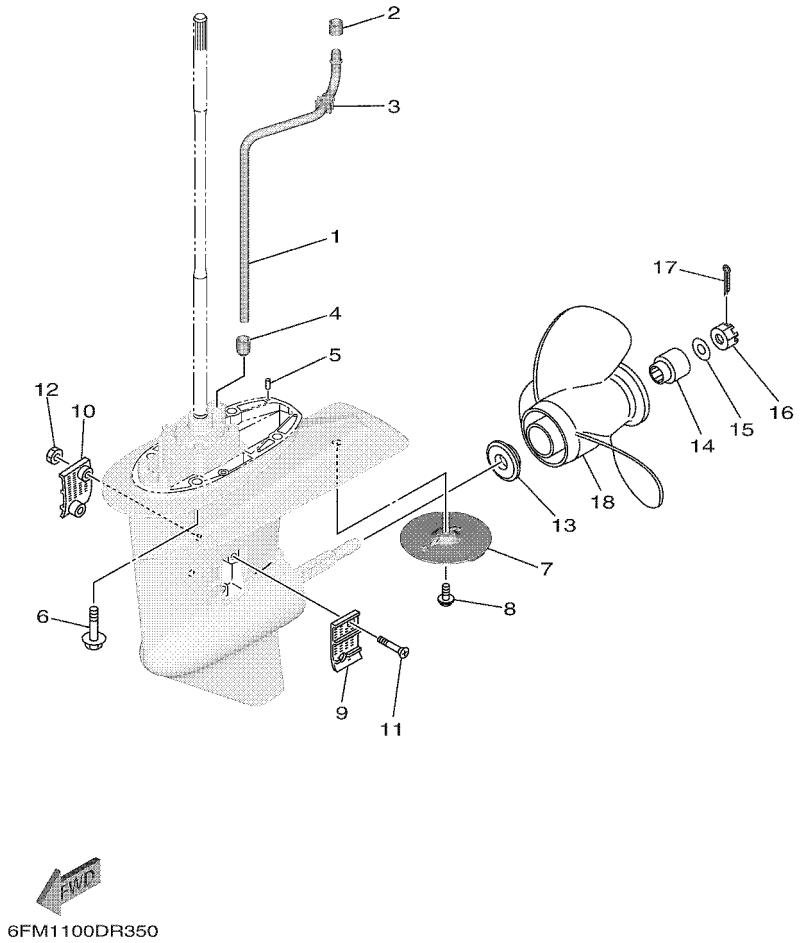

FIG. 35 LOWER CASING & DRIVE 2 BOITIER D'HELICE TRANSMISSION2

REF. NO.	PART NO. N° PIECES	DESCRIPTION DESCRIPTION	MHB	WHB	EB	PB		REMARKS REMARQUES
18	664–45952–00	PROPELLER (3X9-7/8"X14"-F) HELICE (3X9-7/8"X14"-F)	1	1	1	1		UR UR

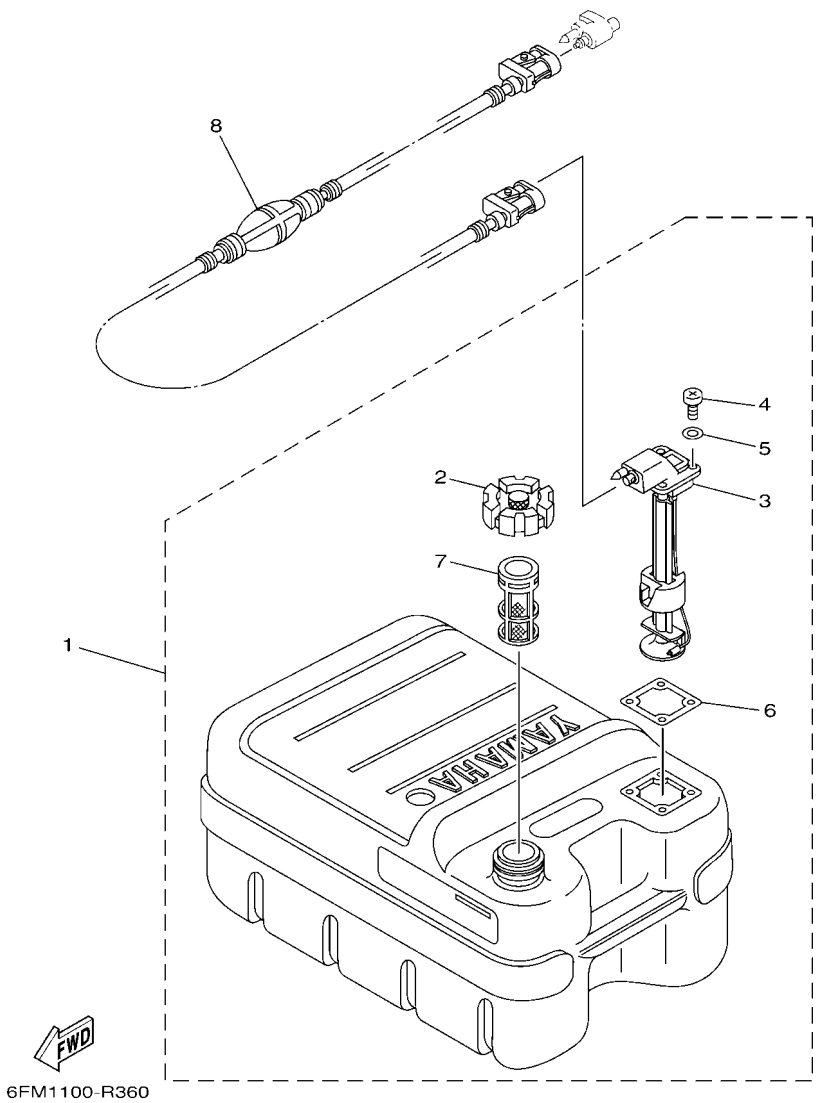

FIG. 36 FUEL TANK 1 — RESERVOIR A CARBURANT 1

REF. NO.	PART NO. N° PIECES	DESCRIPTION DESCRIPTION	MHB	WHB	EB	PB		REMARKS REMARQUES
1	6YJ–24201–31	FUEL TANK ASSY (24L) RESERVOIR A ESSENCE (ENS.):24L	1	1	1	1		AP AP
2	6YJ–24610–01	.CAP ASSY .BOUCHON	1	1	1	1		
3	6Y1–24260–30	.FUEL METER ASSY .INDICATEUR DE CARBURANT	1	1	1	1		WITH INDICATOR WITH INDICATOR
4	90157–05M19	.SCREW, PAN HEAD .VIS, TETE TRONCONIQUE	4	4	4	4		
5	6Y1–24329–00	.SEAL .JOINT	4	4	4	4		
6	6Y1–24268–01	.GASKET, FUEL METER .JOINT, JAUGE A CARBURANT	1	1	1	1		
7	6YJ–24167–00	.STRAINER .FILTRE	1	1	1	1		
8	6YK–24306–64	FUEL PIPE COMP. 1 DURITE A ESSENCE 1	1	1	1	1		AP AP

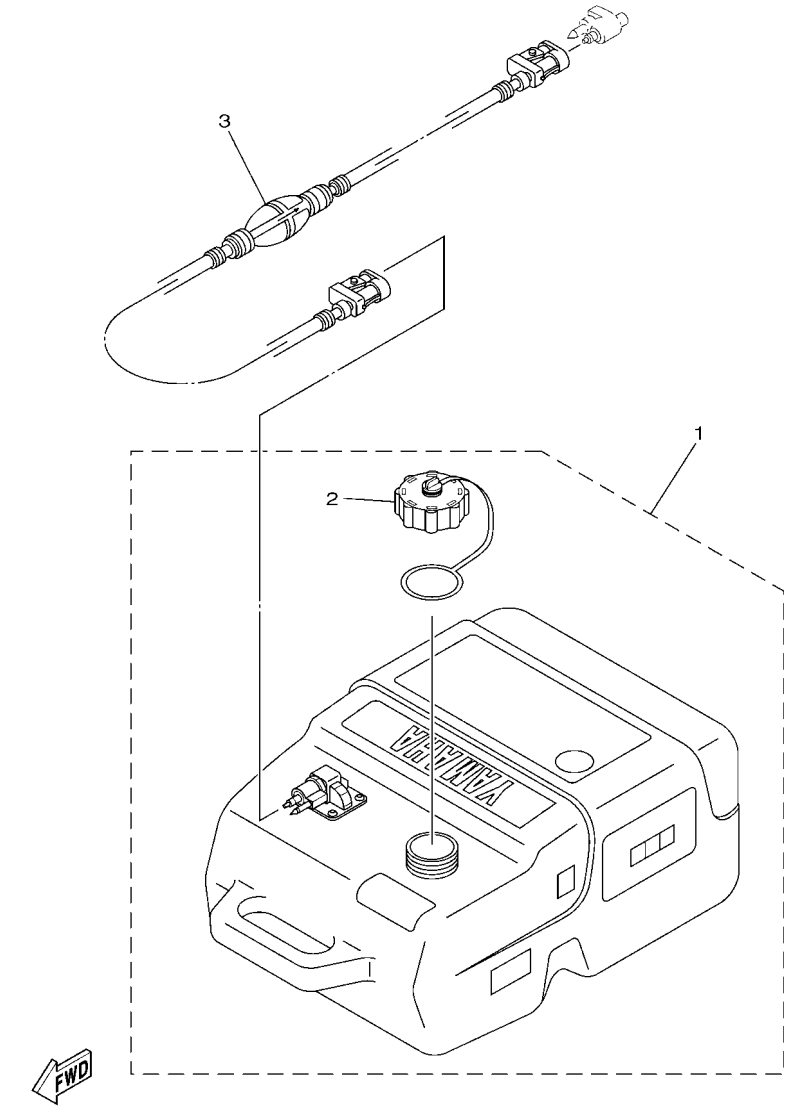

6FM1100-R370

FIG. 37 FUEL TANK 2 — RESERVOIR A CARBURANT 2

REF. NO.	PART NO. N° PIECES	DESCRIPTION DESCRIPTION	MHB	WHB	EB	PB		REMARKS REMARQUES
1	6YK–24201–44	FUEL TANK ASSY (25L) RESERVOIR A ESSENCE (ENS.) 25L	1	1	1	1		AP AP
2	6YL–24610–10	.CAP ASSY .BOUCHON	1	1	1	1		
3	6YK–24306–64	FUEL PIPE COMP. 1 DURITE A ESSENCE 1	1	1	1	1		AP AP

FIG. 38 STEERING GUIDE — FIXATION DE DIRECTION

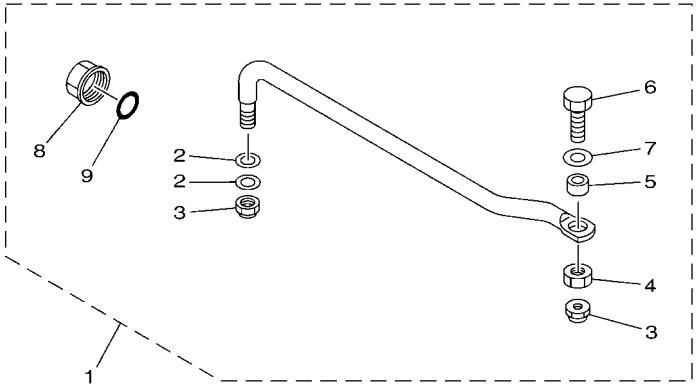

6FM1100-R380

REF. NO.	PART NO. N° PIECES	DESCRIPTION DESCRIPTION	MHB	WHB	EB	PB		REMARKS REMARQUES
1	6FM–61350–00	STEERING GUIDE ATTACHMENT KIT FIXATIONS DE DIRECTION	1	1	1	1		AP AP
2	90201–10M20	.WASHER, PLATE .RONDELLE, PLATE	2	2	2	2		
3	90185–09M01	.NUT, SELF-LOCKING .ECROU,AUTO-BLOQUANT	2	2	2	2		
4	90170–09M03	.NUT .ECROU	1	1	1	1		
5	90387–10M42	.COLLAR .COLLERETTE	1	1	1	1		
6	90101–09M01	.BOLT .BOULON	1	1	1	1		
7	90201–10081	.WASHER, PLATE .RONDELLE, PLATE	1	1	1	1		
8	6E5–43145–01	.CAP, CLAMP BRACKET .CAPUCHON, PRESSE	1	1	1	1		
9	93210–16275	.O-RING .JOINT TORIQUE	1	1	1	1		

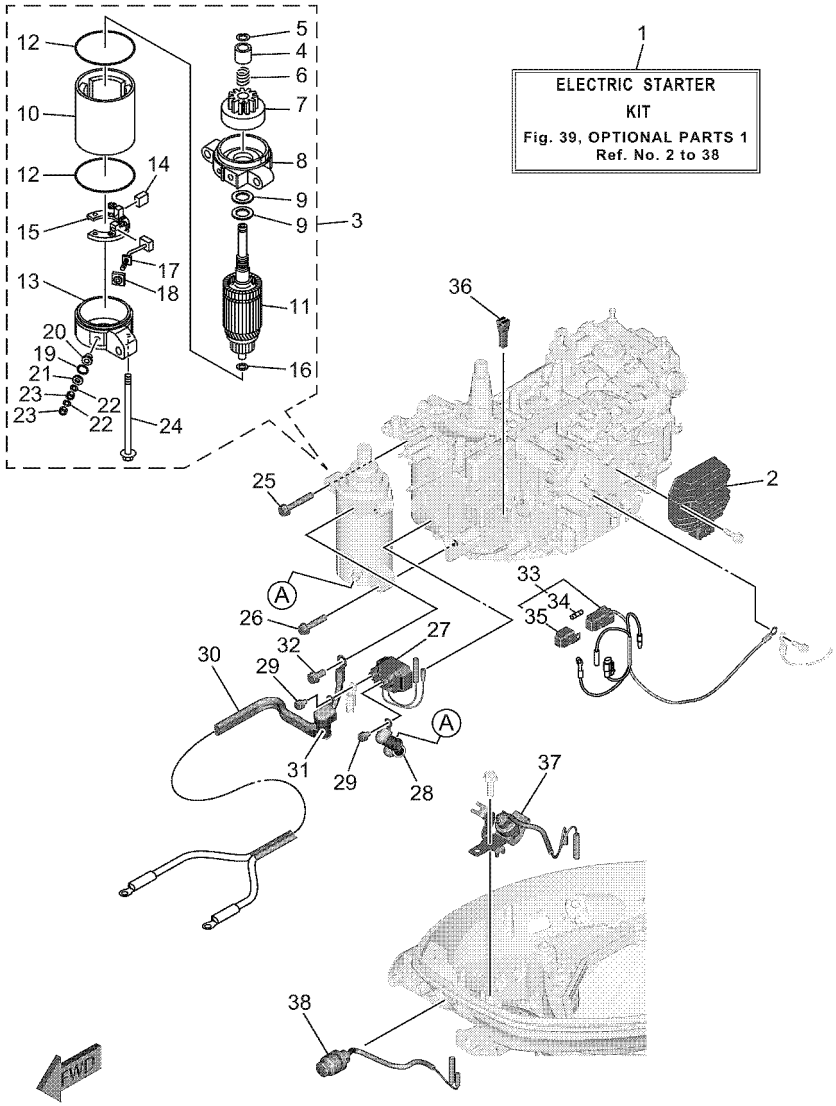

6FMA10EDZ390

FIG. 39 OPTIONAL PARTS 1 — PIECES OPTIONNELLES 1

REF. NO.	PART NO. N° PIECES	DESCRIPTION DESCRIPTION	MHB	WHB	EB	PB		REMARKS REMARQUES
1	6FM–W8180–05	ELECTRIC STARTER KIT KIT DEMARREUR ELECTRIQUE	1					
2	6FM–81960–10	RECTIFIER & REGULATOR ASSY REDRESSEUR REGULATEUR CPLT	1					
3	6AH–81800–10	STARTING MOTOR ASSY DEMARREUR ELECTRIQUE COMPLET	1					
4	6AH–81859–00	.STOPPER, PINION .BUTEE, PIGNON	1					
5	689–81884–00	.CLIP,PINION STOPPER .CLIP, STOPPEUR DE PIGNON	1					
6	689–81858–00	.SPRING, RETURN .RESSORT	1					
7	689–81807–20	.GEAR ASSY, STARTING MOTOR .PIGNON, DEMARREUR ELECTRIQUE	1					
8	6AH–81830–10	.FRONT BRACKET ASSY .SUPPORT AVANT	1					
9	689–81835–00	.WASHER .RONDELLE	2					UN UN
10	689–81810–20	.STATOR ASSY .STATOR COMPLET	1					
11	689–81850–20	.ARMATURE ASSY .INDUIT	1					
12	689–81847–20	.O-RING .JOINT TORIQUE	2					
13	6AH–81820–10	.REAR BRACKET ASSY .SUPPORT ARRIERE COMPLET	1					
14	689–81812–20	.BRUSH 2 .CHARBON 2	1					
15	6AH–81840–00	.BRUSH HOLDER ASSY .SUPPORT DE CHARBON	1					
16	689–81824–00	.WASHER 2 .RONDELLE 2	1					
17	6AH–81811–10	.BRUSH 1 .CHARBON 1	1					
18	689–8182H–00	.BUSH, TERMINAL 2 .DOUILLE, BORNE 2	1					
19	689–8182L–00	.O-RING 1 .JOINT TORIQUE 1	1					
20	689–8182G–00	.BUSH, TERMINAL .BAGUE, BORNE	1					
21	689–8182E–00	.WASHER .RONDELLE	1					
22	689–8182F–00	.WASHER .RONDELLE	2					
23	689–8182A–00	.NUT .ECROU	2					
24	689–81826–20	.BOLT .BOULON	2					
25	97513–08545	BOLT, WITH WASHER VIS HEXAGONAL AVC RONDELLE	2					
26	97513–08535	BOLT, WITH WASHER VIS HEXAGONAL AVC RONDELLE	1					
27	6FM–81940–00	STARTER RELAY ASSY LANCEUR RELAIS (ENS.)	1					

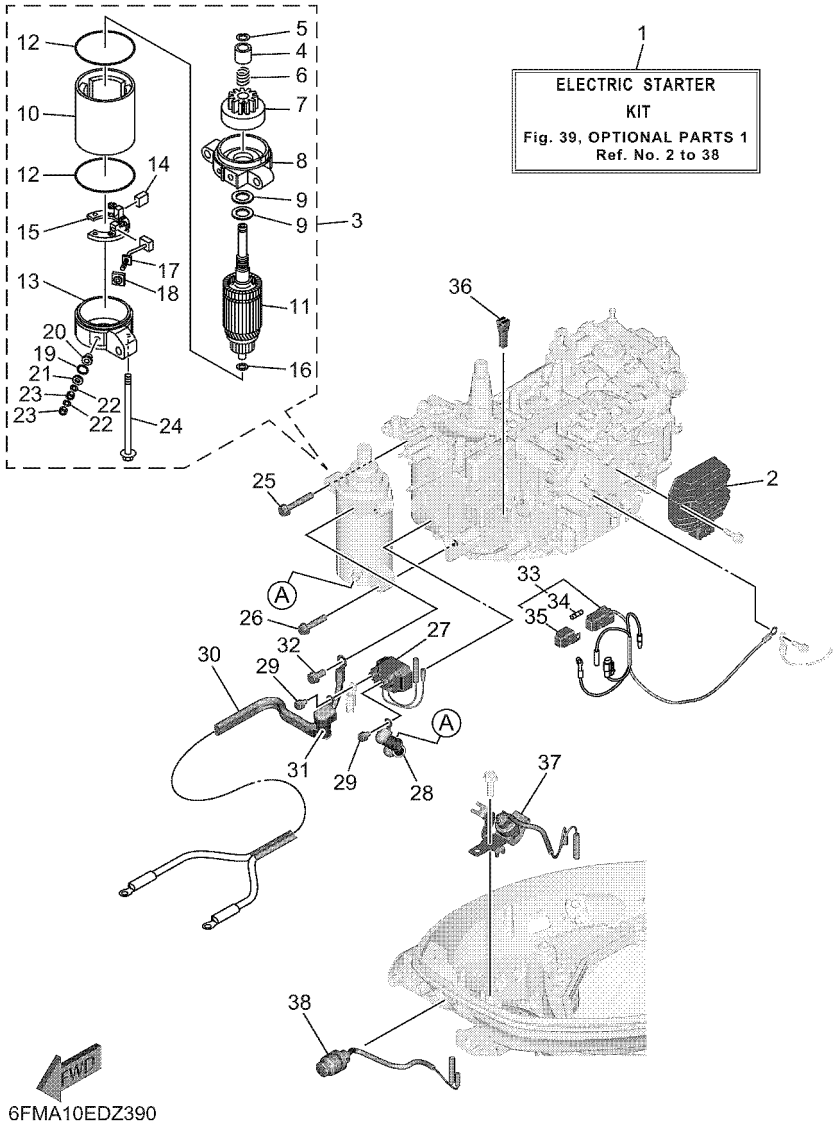

FIG. 39 OPTIONAL PARTS 1 — PIECES OPTIONNELLES 1

REF. NO.	PART NO. N° PIECES	DESCRIPTION DESCRIPTION	MHB	WHB	EB	PB		REMARKS REMARQUES
28	6AH–82117–01	WIRE, LEAD FIL	1					
29	97E95–06610	BOLT, HEXAGON W/W DEEP RECESS VIS HEXAGONAL AVC RONDELLE	2					
30	6FM–82105–01	BATTERY CABLE (L: 2.0M) CABLE DE BATTERIE (L: 2.0M)	1					
31	6P2–82119–00	COVER, LEAD WIRE GARNITURE, FIL	1					
32	97E95–08516	BOLT, HEXAGON W/W DEEP RECESS VIS HEXAGONAL AVC RONDELLE	1					
33	6FM–81971–00	WIRE, LEAD FIL	1					
34	67F–82151–00	.FUSE (20A) .FUSIBLE (20A)	2					
35	67F–8215B–10	.CAP (YELLOW) .BOUCHON (YELLOW)	1					
36	67F–2812A–00	PULLER, FUSE TENDEUR, FUSIBLE	1					
37	6FM–82540–00	NEUTRAL SWITCH ASSY CONTACTEUR DE POINT-MORT	1					
38	65W–81870–00	STARTING SWITCH ASSY CONTACT A CLEF	1					

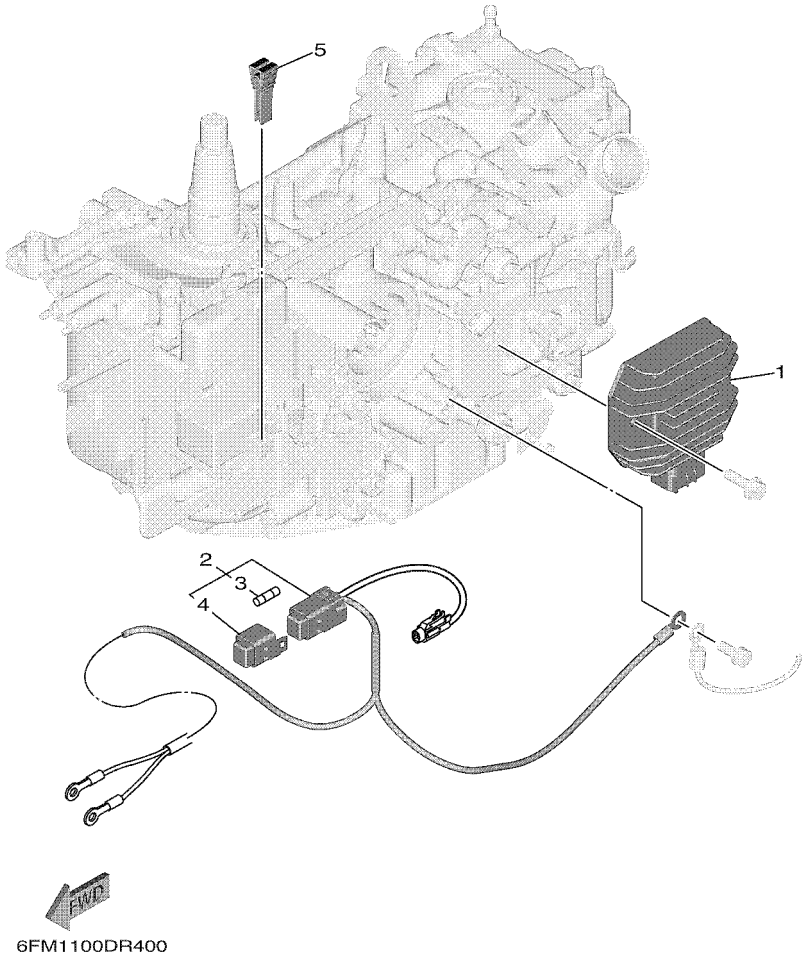

FIG. 40 OPTIONAL PARTS 2 — PIECES OPTIONNELLES 2

REF. NO.	PART NO. N° PIECES	DESCRIPTION DESCRIPTION	MHB	WHB	EB	PB		REMARKS REMARQUES
1	6FM–81960–10	RECTIFIER & REGULATOR ASSY REDRESSEUR REGULATEUR CPLT	1					
2	6FM–81949–00	WIRE, LEAD FIL	1					
3	67F–82151–00	.FUSE (20A) .FUSIBLE (20A)	2					
4	67F–8215B–10	.CAP (YELLOW) .BOUCHON (YELLOW)	1					
5	67F–2812A–00	PULLER, FUSE TENDEUR, FUSIBLE	1					

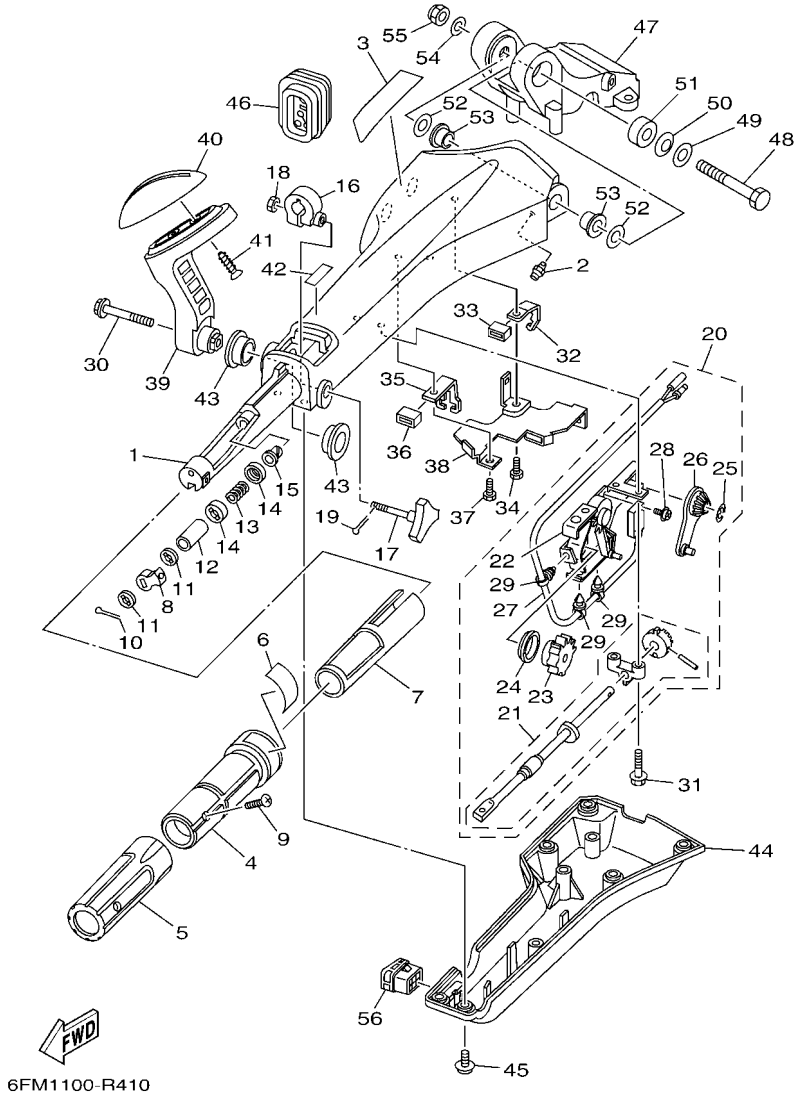

FIG. 41 OPTIONAL PARTS 3 — PIECES OPTIONNELLES 3

REF. NO.	PART NO. N° PIECES	DESCRIPTION DESCRIPTION	MHB	WHB	EB	PB		REMARKS REMARQUES
1	6X4–42111–02–8D	HANDLE, STEERING POIGNEE				1		
2	93700–06002	NIPPLE, GREASE PION				1		
3	6X4–48215–00	GRAPHIC ADHESIF				1		
4	6X4–42119–01	GRIP, STEERING HANDLE POIGNEE, BARRE FRANCHE				1		
5	6X4–42177–01	RUBBER, HANDLE CAOUTCHOUC, POIGNEE				1		
6	6X4–42137–00	INDICATOR, THROTTLE INDICATEUR, ACCELERATION				1		
7	6X4–41291–00	BUSHING COUSSINET				1		
8	6X4–44139–01	COLLAR COLLIER				1		
9	90152–05007	SCREW, COUNTERSUNK VIS, TETE NOYEE				1		
10	91490–20010	PIN. COTTER GOUPILLE				1		
11	6X4–44177–00	WASHER RONDELLE				2		
12	6X4–42128–00	COLLAR, DISTANCE 1 COLLIER, D'ENTRETOISE 1				1		
13	90501–23215	SPRING, COMPRESSION RESSORT, COMPRESSION				1		
14	6X4–44188–00	WASHER RONDELLE				2		
15	90386–08032	BUSH DOUILLE				1		
16	63D–42126–00	FRICTION, STEERING HANDLE GRIP CUVETTE, POIGNEE DE DIRECTION				1		
17	6X4–48154–00	KNOB, THROTTLE BOUTON, ACCELERATEUR				1		
18	95380–06600	NUT, HEXAGON ECROU				1		
19	91490–20010	PIN. COTTER GOUPILLE				1		
20	6X4–44100–01	SHIFT LINK ASSY MAILLON DE SELECTEUR				1		
21	6X4–42115–00	.SHAFT, STEERING HANDLE .AXE, BARRE FRANCHE				1		
22	6X4–44102–00	.SHIFT ASSIST ASSY. .SELECTEUR DE MAINTIEN				1		
23	6X4–47731–01	.GEAR, DRIVE .PIGNON D'ENTRAINEMENT				1		
24	6X4–44132–00	.BUSHING .COUSSINET				1		
25	6X4–14137–00	.CLIP .JONC				1		
26	6X4–48261–00	.ARM, THROTTLE .BRAS, ACCELERATION				1		
27	6X4–82540–00	.NEUTRAL SWITCH ASSY .CONTACTEUR DE POINT-MORT				1		

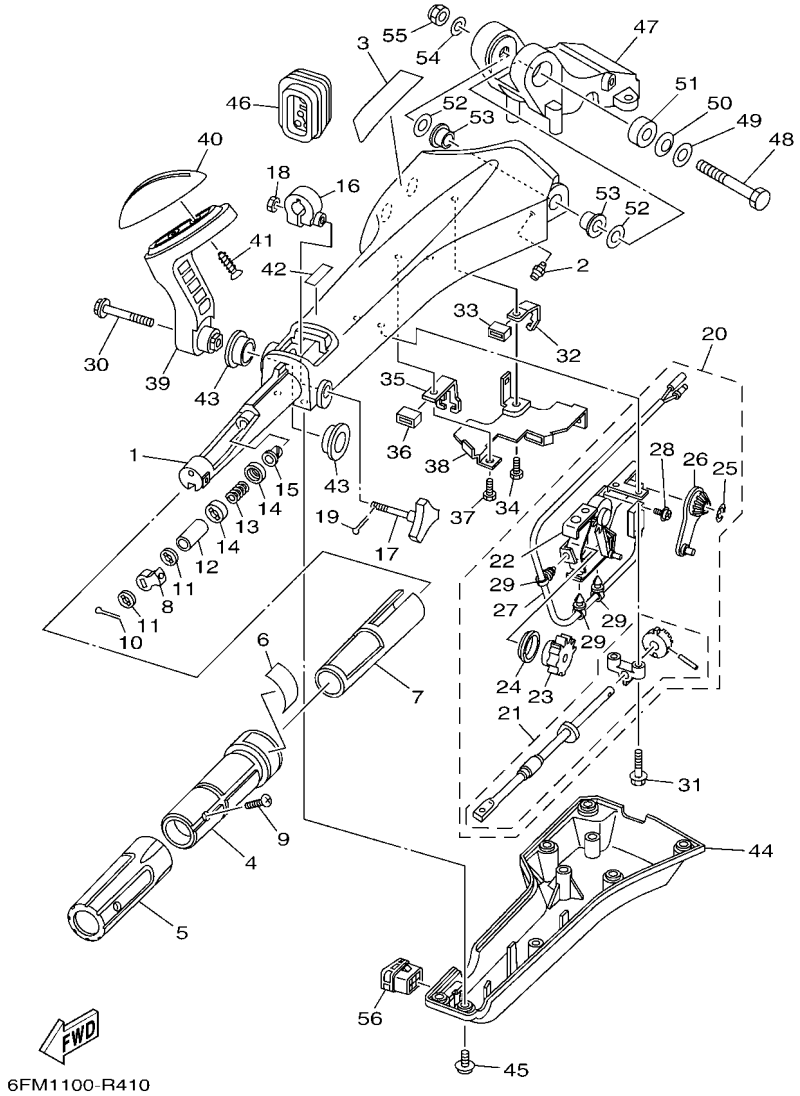

FIG. 41 OPTIONAL PARTS 3 — PIECES OPTIONNELLES 3

REF. NO.	PART NO. N° PIECES	DESCRIPTION DESCRIPTION	MHB	WHB	EB	PB		REMARKS REMARQUES
28	703–48129–00	.SCREW 3 .VIS 3				2		
29	6X4–42821–00	.BAND, CLAMP .BRIDE, COLLIER				3		
30	97E95–08540	BOLT, HEXAGON W/W DEEP RECESS VIS HEXAGONAL AVC RONDELLE				1		
31	97E95–06530	BOLT, HEXAGON W/W DEEP RECESS VIS HEXAGONAL AVC RONDELLE				2		
32	6X4–48538–00	CLAMP, CABLE 1 COLLIER				1		
33	6X4–26367–01	PROTECTOR PROTECTEUR				1		
34	97D95–06014	BOLT, HEXAGON DEEP RECESS VIS HEXAGONAL				1		
35	6X4–48538–10	CLAMP, CABLE 1 COLLIER				1		
36	6X4–26367–01	PROTECTOR PROTECTEUR				1		
37	97D95–06014	BOLT, HEXAGON DEEP RECESS VIS HEXAGONAL				1		
38	6X4–42159–00	STAY SUPPORT				1		
39	6X4–44159–A0–8D	HANDLE, GEAR SHIFT POIGNEE, LEVIER D'EMBRAYAGE				1		
40	6X4–44173–00	LEVER, SHIFT CONTROL POIGNEE, INVERSION				1		
41	97780–60920	SCREW, TAPPING VIS, TETE BOMBEE				2		
42	6X3–44191–00	INDICATOR, SHIFT ETIQUETTE, EMBRAYAGE				1		
43	90386–26MA3	BUSH DOUILLE				2		
44	6X4–42131–11	COVER, HANDLE STEERING COUVERCLE				1		
45	97985–06216	SCREW, WITH WASHER VIS, AVEC RONDELLE				6		
46	6X4–42725–01	GROMMET PASSE-FIL				1		
47	63D–42121–22–8D	BRACKET SUPPORT				1		
48	90101–12014	BOLT BOULON				1		
49	92990–12200	WASHER, PLAIN RONDELLE, PLATE				1		
50	90206–12M22	WASHER, WAVE RONDELLE, ONDULEE				1		
51	90387–12M02	COLLAR COLLERETTE				1		
52	90201–12035	WASHER, PLATE RONDELLE, PLATE				2		
53	90386–12003	BUSH DOUILLE				2		
54	92990–12600	WASHER, PLATE RONDELLE, PLATE				1		

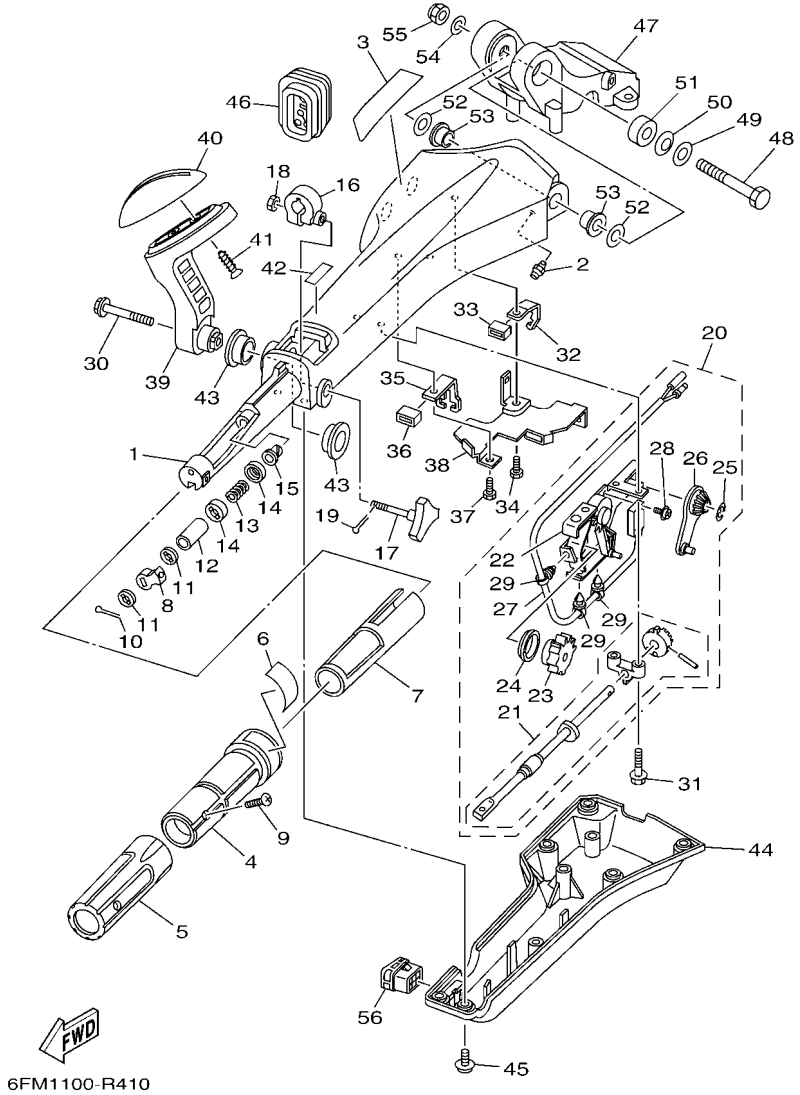

FIG. 41 OPTIONAL PARTS 3 — PIECES OPTIONNELLES 3

REF. NO.	PART NO. N° PIECES	DESCRIPTION DESCRIPTION	MHB	WHB	EB	PB		REMARKS REMARQUES
55	90185–12M12	NUT, SELF-LOCKING ECROU,AUTO-BLOQUANT				1		
56	6X4–42728–10	CAP CAPUCHON				1		

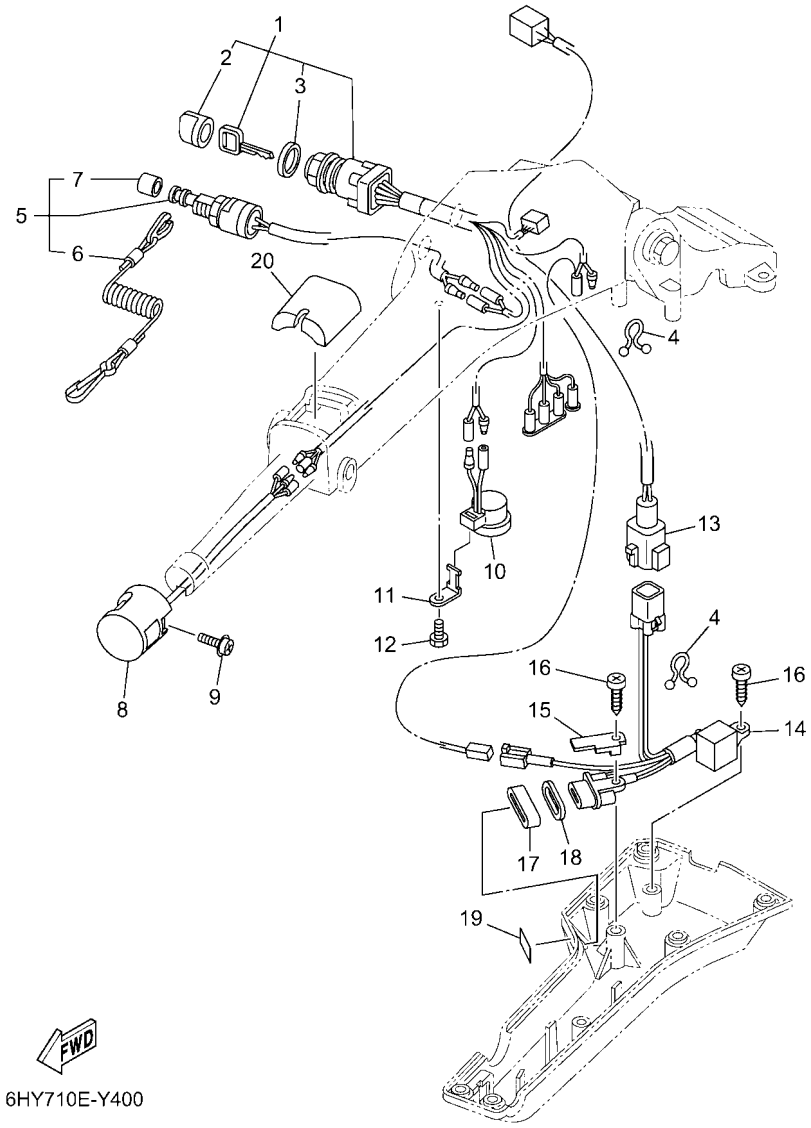

FIG. 42 OPTIONAL PARTS 4 — PIECES OPTIONNELLES 4

REF. NO.	PART NO. N° PIECES	DESCRIPTION DESCRIPTION	MHB	WHB	EB	PB		REMARKS REMARQUES
1	6X4–82510–42	MAIN SWITCH ASSY CONTACTEUR A CLEF COMPLET				1		
2	676–82577–01	.CAP, KEY .CABOCHON				1		
3	703–82532–00	.CAP .COUVERCLE				1		
4	90464–08M07	CLAMP BRIDE				2		
5	69W–82575–00	ENGINE STOP SWITCH ASSY COUPE CIRCUIT CPLT				1		
6	682–82556–00	.LANYARD, STOP SWITCH .CORDON DU COUPE CIRCUIT				1		
7	689–8257Y–00	.CAP .COUVERCLE				1		
8	6X4–82563–01	TRIM & TILT SWITCH ASSY INCLINER ET PARER COMMUTATEUR				1		
9	97980–06216	SCREW, WITH WASHER VIS, AVEC RONDELLE				1		
10	6X4–83383–00	BUZZER RONFLEUR				1		
11	6X4–83386–00	STAY, BUZZER SUPPOR, RONFLEUR				1		
12	97D95–06014	BOLT, HEXAGON DEEP RECESS VIS HEXAGONAL				1		
13	6X4–83653–20	WIRE, LEAD (L:700MM) FIL (L:700MM)				1		
14	6C5–84301–10	PILOT LIGHT ASSY 1 LAMPE-TEMOIN 1				1		
15	6X4–44114–00	STOPPER PLAQUETTE				1		
16	97780–60620	SCREW, TAPPING VIS, TETE BOMBEE				2		
17	6X4–42727–01	GROMMET PASSE-FIL				1		
18	6FM–83589–00	GASKET GARNITURE				1		
19	6X4–85415–00	MARK, SIGNAL LAMP ETIQUETTE				1		
20	6X4–81942–01	COVER COUVERCLE				1		

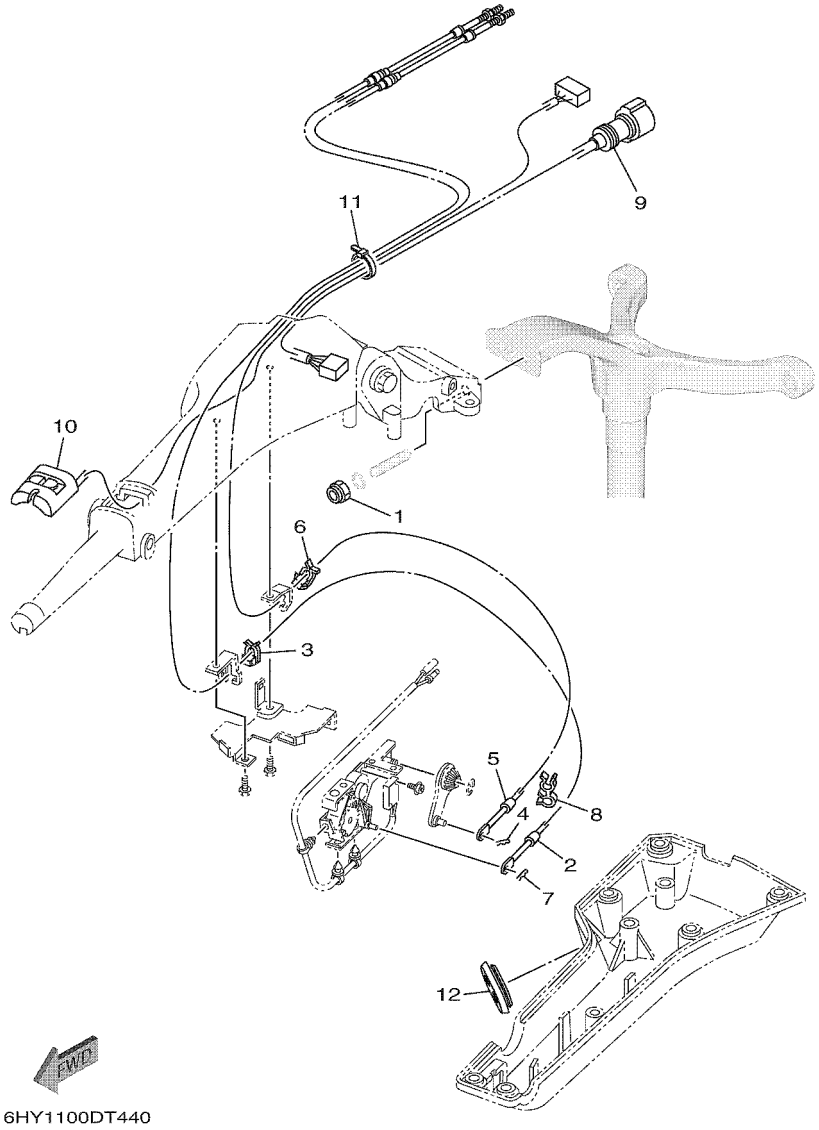

FIG. 43 OPTIONAL PARTS 5 — PIECES OPTIONNELLES 5

REF. NO.	PART NO. N° PIECES	DESCRIPTION DESCRIPTION	MHB	WHB	EB	PB		REMARKS REMARQUES
1	90185–10027	NUT, SELF-LOCKING ECROU,AUTO-BLOQUANT				2		
2	63D–48321–11	CABLE CABLE				1		
3	63D–48538–00	CLAMP, CABLE 1 COLLIER				1		
4	90468–10005	CLIP JONC				1		
5	6FM–26301–10	THROTTLE CABLE ASSY CABLE D'ACCELERATEUR				1		
6	63D–48538–00	CLAMP, CABLE 1 COLLIER				1		
7	90468–10005	CLIP JONC				1		
8	90464–09M42	CLAMP BRIDE				1		
9	6X4–82586–11	EXT., WIRE HARNESS (L:950MM) EXT, FAISCEAU DE FILS (L:950MM				1		
10	6X4–81860–00	SWITCH ASSY COMMUTATEUR COMPLET				1		
11	90465–13M39	CLAMP BRIDE				1		
12	6H3–42727–01	GROMMET PASSE-FIL				1		

FIG. 44 OPTIONAL PARTS 6 — PIECES OPTIONNELLES 6

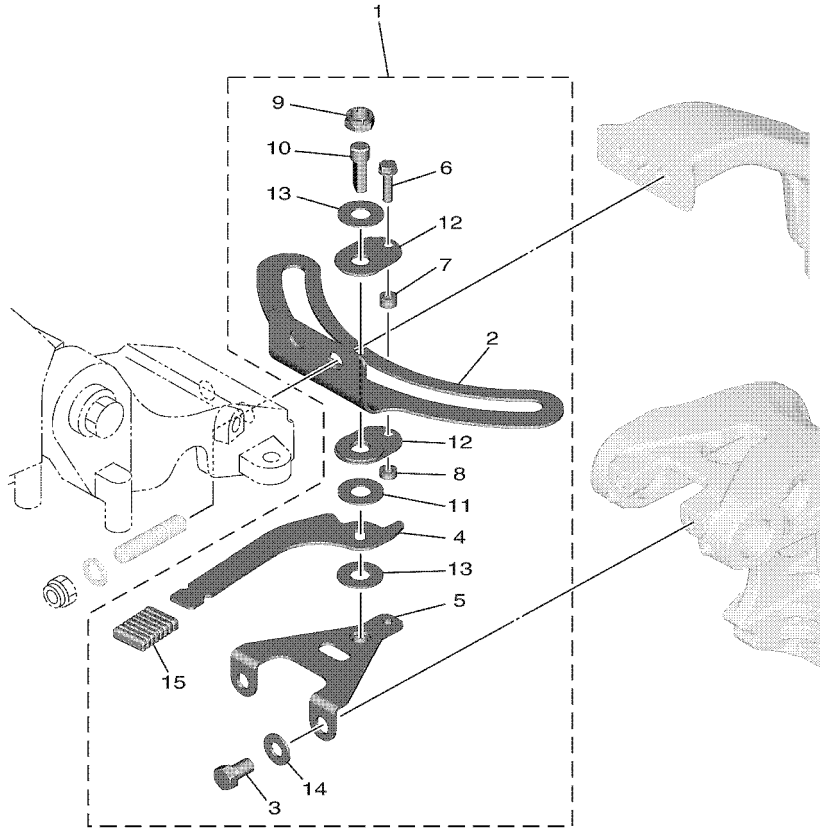

6HY1100DT450

REF. NO.	PART NO. N° PIECES	DESCRIPTION DESCRIPTION	MHB	WHB	EB	PB		REMARKS REMARQUES
1	6FM–42508–02	STEERING FRICTION ASSY DIRECTION FRICTION (ENS.)				1		
2	6FM–42527–00	.PLATE, FRICTION .PLAQUE, FRICTION				1		
3	97D95–08014	.BOLT, HEXAGON DEEP RECESS .VIS HEXAGONAL				2		
4	6FM–42561–00	.KNOB, STEERING LOCK .BOUTON				1		
5	6FM–42525–00	.PLATE, FRICTION .PLAQUE, FRICTION				1		
6	97595–05520	.BOLT, WITH WASHER .VIS HEXAGONAL AVC RONDELLE				1		
7	90387–05054	.COLLAR .COLLERETTE				1		
8	90387–05053	.COLLAR .COLLERETTE				1		
9	90185–10M14	.NUT, SELF-LOCKING .ECROU,AUTO-BLOQUANT				1		
10	67C–42562–A0	.SHAFT, STEERING LOCK .ARBRE,ANTIVOL DE DIRECTION				1		
11	90202–10M56	.WASHER, PLATE .RONDELLE, PLATE				1		
12	65W–42528–00	.PLATE, FRICTION .PLAQUE, FRICTION				2		
13	90201–106M5	.WASHER, PLATE .RONDELLE, PLATE				2		
14	92995–08200	.WASHER .RONDELLE				2		
15	689–43633–01	.COVER, TILT LEVER .COUVERCLE				1		

FIG. 45 OPTIONAL PARTS 7 — PIECES OPTIONNELLES 7

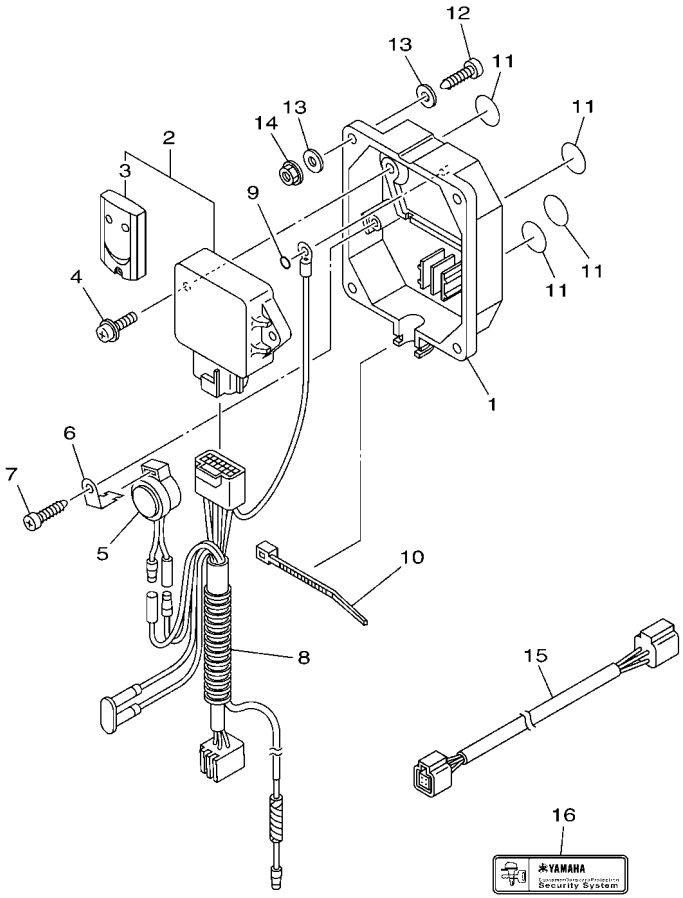

6CJ1100-K370

REF. NO.	PART NO. N° PIECES	DESCRIPTION DESCRIPTION	MHB	WHB	EB	PB		REMARKS REMARQUES
1	6Y8–86267–00	CASE COMPLETE 1 CARTER (ENS.) 1			1	1		
2	6Y8–86260–03	REMOTE CONTROL UNIT ASSY UNITE DE TELECOMMANDE (ENS.)			1	1		
3	6AA–86261–01	.XMTR. COMP. .XMTR. COMP.			2	2		
4	97980–06216	SCREW, WITH WASHER VIS, AVEC RONDELLE			2	2		
5	6X4–83383–00	BUZZER RONFLEUR			1	1		
6	6X4–83386–00	STAY, BUZZER SUPPOR, RONFLEUR			1	1		
7	97780–60620	SCREW, TAPPING VIS, TETE BOMBEE			1	1		
8	6Y8–82509–10	WIRE, SUB LEAD FIL, SECONDAIRE			1	1		
9	93210–04279	O-RING JOINT TORIQUE			1	1		
10	90465–11M10	CLAMP BRIDE			1	1		
11	6Y8–8454G–00	PATCH 1 TAMPON 1			4	4		
12	90167–06M00	SCREW, TAPPING VIS, TETE FRAISEE			4	4		UR UR
	97880–06035	SCREW, PAN HEAD VIS, TETE TRONCONIQUE			4	4		UR UR
13	90201–06M30	WASHER, PLATE RONDELLE, PLATE			8	8		
14	95780–06300	NUT, FLANGE ECROU			4	4		
15	6Y8–82521–11	2FT PIGTAIL BUS FAISCEAU (L: 2FT.)			1	1		
16	6Y8–48277–00	STICKER 1 ETIQUETTE 1			4	4		

FIG. 46 REPAIR KIT 1 — KITS DE REPARATION 1

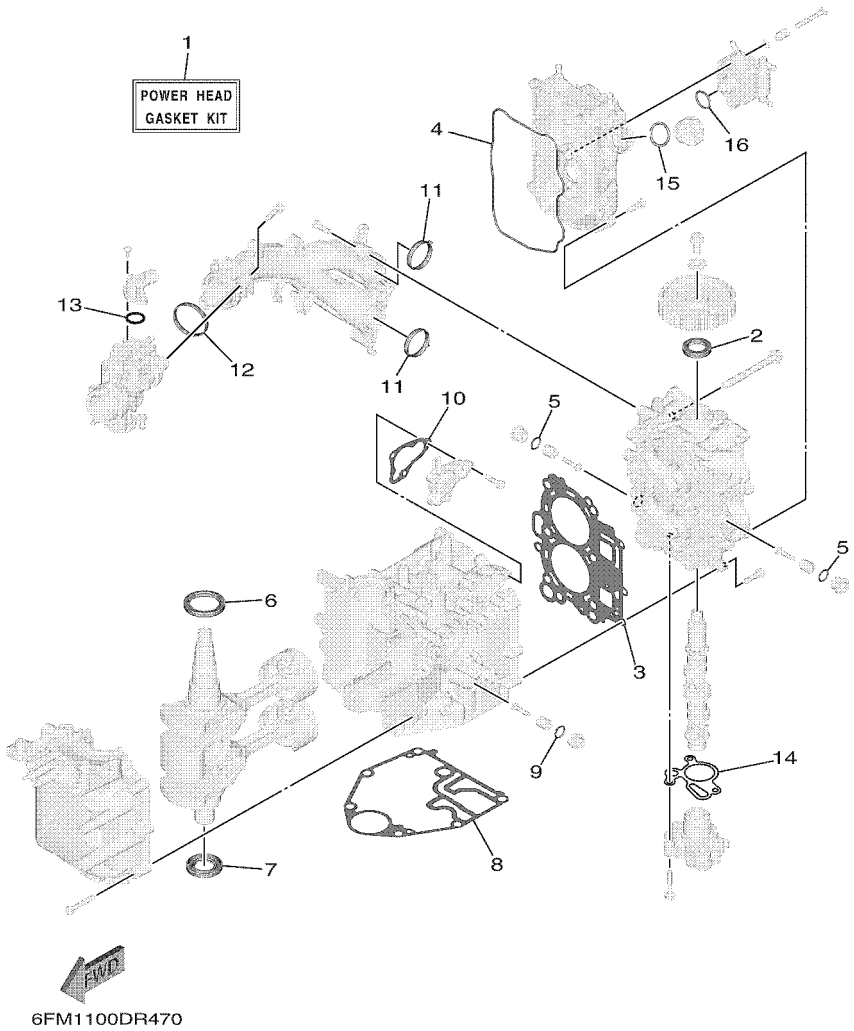

REF. NO.	PART NO. N° PIECES	DESCRIPTION DESCRIPTION	MHB	WHB	EB	PB		REMARKS REMARQUES
1	6FM–W0001–01	POWER HEAD GASKET KIT POCHETTE DE JINTS TETE MOTRICE	1	1	1	1		
2	93102–22010	.OIL SEAL .JOINT SPY	1	1	1	1		
3	6FM–11181–00	.GASKET, CYLINDER HEAD 1 .JOINT, DE CULASSE 1	1	1	1	1		
4	6FM–11356–00	.SEAL, CYLINDER 2 .JOINT, SPY CYLINDRE	1	1	1	1		
5	93210–13M63	.O-RING .JOINT TORIQUE	2	2	2	2		
6	93102–37004	.OIL SEAL .JOINT SPY	1	1	1	1		
7	93102–25014	.OIL SEAL .JOINT SPY	1	1	1	1		
8	6FM–11351–01	.GASKET, CYLINDER .JOINT, D'EMBASE	1	1	1	1		
9	93210–13M63	.O-RING .JOINT TORIQUE	1	1	1	1		
10	6FM–12414–00	.GASKET, COVER .JOINT, COUVERCLE	1	1	1	1		
11	6FM–13645–00	.GASKET, MANIFOLD 1 .JOINT, TUBULURE 1	2	2	2	2		
12	6FM–13646–00	.GASKET, MANIFOLD 2 .JOINT, TUBULURE 2	1	1	1	1		
13	1ST–1416A–00	.O-RING .JOINT TORIQUE	1	1	1	1		
14	6AH–13329–11	.GASKET, PUMP COVER .JOINT, COUVERCLE DE POMPE	1	1	1	1		
15	93210–24M79	.O-RING .JOINT TORIQUE	1	1	1	1		
16	93210–20M65	.O-RING .JOINT TORIQUE	1	1	1	1		

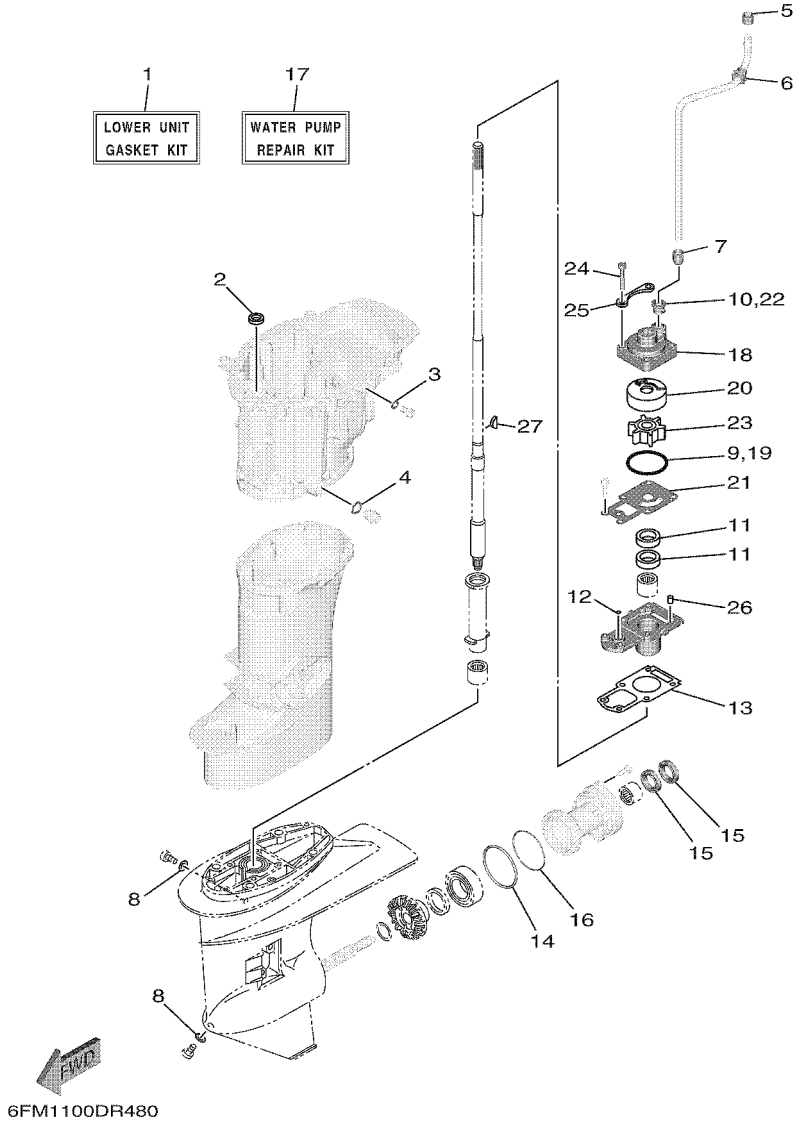

FIG. 47 REPAIR KIT 2 — KITS DE REPARATION 2

REF. NO.	PART NO. N° PIECES	DESCRIPTION DESCRIPTION	MHB	WHB	EB	PB		REMARKS REMARQUES
1	6FM–W0001–21	LOWER UNIT GASKET KIT POCHETTE DE JOINTS EMBASE	1	1	1	1		
2	93101–13001	.OIL SEAL .JOINT SPY	1	1	1	1		
3	90430–08143	.GASKET .JOINT	1	1	1	1		
4	90430–14M09	.GASKET .JOINT	1	1	1	1		
5	682–44365–01	.DAMPER, WATER SEAL 1 .JOINT, TUBE D'EAU 1	1	1	1	1		
6	6AH–44365–01	.DAMPER, WATER SEAL 1 .JOINT, TUBE D'EAU 1	1	1	1	1		
7	6L2–44368–01	.RUBBER, WATER SEAL 4 .CAOUTCHOUC EAU JUNTA 4	1	1	1	1		
8	90430–08003	.GASKET .JOINT	2	2	2	2		
9	93210–45161	.O-RING .JOINT TORIQUE	1	1	1	1		
10	6L2–44367–11	.DAMPER, WATER SEAL 3 .JOINT TUBE D'EAU 3	1	1	1	1		
11	93101–20048	.OIL SEAL .JOINT SPY	2	2	2	2		
12	93210–06ME6	.O-RING .JOINT TORIQUE	1	1	1	1		
13	6L2–45315–A0	.PACKING, LOWER CASING .JOINT, BOITIER D'HELICE	1	1	1	1		
14	93210–60MA3	.O-RING .JOINT TORIQUE	1	1	1	1		
15	93101–20M07	.OIL SEAL .JOINT SPY	2	2	2	2		
16	93210–60M99	.O-RING .JOINT TORIQUE	1	1	1	1		
17	6FM–W0078–02	WATER PUMP REPAIR KIT KIT DE REPARATION DE LA POMPE	1	1	1	1		
18	6L2–44311–01	.HOUSING, WATER PUMP .CORPS, POMPE A EAU	1	1	1	1		
19	93210–45161	.O-RING .JOINT TORIQUE	1	1	1	1		
20	6L2–44322–00	.INSERT, CARTRIDGE .CUVETTE	1	1	1	1		
21	6FM–44323–01	.OUTER PLATE, CARTRIDGE .PLAQUE EXTERIEURE	1	1	1	1		
22	6L2–44367–11	.DAMPER, WATER SEAL 3 .JOINT TUBE D'EAU 3	1	1	1	1		
23	6L2–44352–00	.IMPELLER .TURBINE	1	1	1	1		
24	97E95–06540	.BOLT, HEXAGON W/W DEEP RECESS .VIS HEXAGONAL AVC RONDELLE	4	4	4	4		
25	6L2–44328–00	.PLATE .PLAQUETTE	2	2	2	2		
26	93604–12M07	.PIN, DOWEL .CLAVETTE	2	2	2	2		
27	90280–03024	.KEY, WOODRUFF .CLAVETTE, DEMI-LUNE	1	1	1	1		

PART NO. N° PIECES	REF. NO.
6FM–11111–10–1S	5 – 2
6FM–11119–00	3 – 7
6AH–11133–10	5 – 3
6FM–11168–00	5 – 11
6FM–11181–00	5 – 4
	46 – 3
6FM–11191–00	5 – 8
6G8–11197–B0	3 – 11
	5 – 15
6G8–11325–00	1 – 1
	1 – 2
	1 – 5
	3 – 9
	3 – 18
	5 – 13
6FM–11351–01	3 – 6
	46 – 8
6FM–11356–00	5 – 9
	46 – 4
6FM–11411–00	4 – 1
6AH–11416–00	4 – 2
6AH–11416–10	4 – 2
6AH–11416–20	4 – 2
6AH–11536–00	10 – 6
6AH–11537–01	10 – 2
6AH–11557–00	10 – 7
67C–11603–01	4 – 6
67C–11604–01	4 – 6
67C–11605–01	4 – 6
6FM–11631–00	4 – 5
6FM–11633–00	4 – 7
6FM–11635–00	4 – 5
6FM–11636–00	4 – 5
6FM–11650–01	4 – 3
6AH–11654–00	4 – 4
6FM–12111–00	6 – 1
3YF–12113–00	6 – 4
62Y–12116–00	6 – 3
30X–12117–00	6 – 5
30X–12118–00	6 – 6
51Y–12119–00	6 – 7
6FM–12121–00	6 – 2
66M–12146–00	6 – 8
6FM–12151–00	6 – 16
6AH–12151–01	6 – 13
62Y–12158–00	6 – 15
6C5–12158–00	6 – 18
64J–12159–00	6 – 14

PART NO. N° PIECES	REF. NO.
6C5–12159–00	6 – 17
6HY–12170–01	10 – 1
6FM–12411–00	1 – 3
	3 – 13
6FM–12412–00	3 – 14
6FM–12413–00–1S	3 – 15
6FM–12414–00	1 – 4
	3 – 16
	46 – 10
6FM–1243K–00	12 – 21
6FM–12482–01	12 – 4
6FM–12483–00	12 – 5
6FM–12484–00	12 – 6
6FM–12485–01	12 – 7
6FM–12498–00	12 – 3
6DR–12572–00	22 – 15
6R3–12581–10	22 – 16
6R3–12582–00	22 – 17
6R3–12583–10	22 – 18
6C5–12858–A0	3 – 23
66M–13131–10	11 – 20
6FM–13152–01	8 – 5
6FM–13161–01	8 – 15
6AH–13300–00	10 – 15
6FM–13317–10	33 – 15
6AH–13329–11	10 – 16
	46 – 14
6FM–13411–00	33 – 3
6FM–13415–00	33 – 5
6FM–13421–00	33 – 4
6FM–13437–62	10 – 19
5GH–13440–90	1 – 6
	3 – 22
67F–13448–00	9 – 29
6FM–13542–00	12 – 26
6FM–13543–00	7 – 9
6FM–13593–00	9 – 24
6FM–13641–00	7 – 6
6FM–13645–00	7 – 7
	46 – 11
6FM–13646–00	7 – 8
	46 – 12
6FM–13750–02	7 – 2
6FM–13761–10	8 – 16
6FM–13766–00	8 – 18
6FM–13781–00	9 – 23
6FM–13782–00	8 – 12
6FM–13906–00	9 – 4

PART NO. N° PIECES	REF. NO.
6FM–13910–00	9 – 17
6FM–13915–00	9 – 19
6FM–1410H–01	7 – 3
6FM–14137–00	9 – 22
6X4–14137–00	41 – 25
6FM–14146–00	9 – 5
1ST–1416A–00	7 – 4
	46 – 13
68V–1416A–00	8 – 17
6FM–14180–02	9 – 1
6FM–14181–01	9 – 3
6FM–14182–00	9 – 2
6FM–14191–00	12 – 22
6FM–14200–02	7 – 1
68V–14216–00	7 – 5
6FM–14243–00	9 – 8
6E7–14325–00	11 – 24
6FM–14386–00	9 – 14
6FM–1441J–00	8 – 8
6FM–1443G–00	12 – 23
6FM–14440–10	8 – 7
6P2–14446–00	7 – 10
6FM–14497–00	8 – 25
6FM–14546–00	9 – 12
6FM–14561–00	9 – 18
6FM–14562–00	9 – 11
6FM–14565–00	9 – 6
	9 – 15
6FM–14567–00	9 – 7
6FM–14571–00	26 – 27
	27 – 17
6FM–14674–00	9 – 16
6FM–1469M–00	9 – 20
6FM–1469N–00	9 – 21
6FM–14711–00–CA	32 – 9
6FM–14731–00–CA	32 – 1
6FM–1475A–00	12 – 15
6FM–1475E–01	12 – 16
6FM–1475F–00	12 – 17
6FM–1475G–00	12 – 19
6FM–14984–00	9 – 9
68V–14985–00	9 – 13
6FM–15100–01	3 – 2
6FM–15311–01–CA	33 – 1
6FM–15362–00	33 – 14
6G8–15363–00	5 – 19
6FM–15373–00	8 – 10
6HY–15407–00	5 – 18

PART NO. N° PIECES	REF. NO.
6FM–15705–01	13 – 9
6FM–15710–06	13 – 1
6FM–15711–10	13 – 2
6FM–15713–00	13 – 5
6FM–15714–01	13 – 6
6FM–15721–01	13 – 17
63V–15726–00	13 – 25
6FM–15726–00	13 – 11
63V–15734–00	13 – 23
6FM–15734–01	13 – 8
6FM–15735–01	13 – 10
6FM–15741–01	13 – 7
6FM–15748–00	13 – 22
6FM–15752–00	13 – 19
6FM–15753–00	13 – 18
6G1–15755–00	13 – 13
6FM–15762–00	13 – 29
6FM–15764–10	13 – 3
6FM–15767–00	13 – 26
6FM–15768–00	13 – 20
6FM–15770–08	13 – 30
6FM–15774–00	19 – 8
6G1–15779–00	13 – 15
6A0–15789–01	13 – 16
6FM–15793–01	13 – 12
63V–15794–00	13 – 21
68T–15795–00	13 – 4
6FM–15799–01	13 – 24
6E5–21744–00	12 – 18
6FM–21841–00	9 – 10
6AH–22471–00	31 – 3
69A–23129–00	31 – 59
6YJ–24167–00	36 – 7
6FM–2417F–00	8 – 20
6FM–2419F–00	8 – 21
6YJ–24201–31	36 – 1
6YK–24201–44	37 – 1
6C5–24251–01	11 – 32
6Y1–24260–30	36 – 3
6Y1–24268–01	36 – 6
6G1–24304–11	11 – 1
6YK–24306–64	36 – 8
	37 – 3
6FM–24310–01	12 – 1
6FM–24311–00	11 – 4
6FM–24312–00	11 – 14
6FM–24313–20	11 – 31
6FM–24315–00	11 – 33

PART NO. N° PIECES	REF. NO.
6Y1–24329–00	36 – 5
61N–24329–01	11 – 2
66M–24374–00	11 – 26
688–24378–00	12 – 10
6C5–24378–00	12 – 11
6FM–24396–00	11 – 38
6AH–24410–71	11 – 15
66M–24411–12	11 – 18
6AH–24413–70	11 – 16
6A0–24421–01	11 – 17
66M–24423–00	11 – 19
66M–24444–00	11 – 22
66M–24454–00	11 – 21
6D8–24469–00	11 – 9
66M–24471–02	11 – 23
6D8–24519–00	11 – 10
6FM–24521–00	11 – 7
6FM–24560–00	11 – 5
6D8–24563–00	1 – 8
	11 – 6
6D8–24564–00	1 – 9
	11 – 8
6FM–24566–00	11 – 11
6YJ–24610–01	36 – 2
6YL–24610–10	37 – 2
6FM–2475H–00	5 – 21
6FM–26301–00	23 – 17
6FM–26301–10	43 – 5
6FM–26316–01	23 – 18
6X4–26367–01	41 – 33
	41 – 36
62Y–28100–01	11 – 39
67F–2812A–00	17 – 16
	39 – 36
	40 – 5
6HY–28199–76–D0	11 – 40
6HY–28199–76–E0	11 – 40
6HY–28199–76–F0	11 – 40
6HY–28199–76–G0	11 – 40
6HY–28199–76–H0	11 – 40
6HY–28199–76–S0	11 – 40
6HY–28199–86–K0	11 – 41
6HY–28199–86–L0	11 – 41
6HY–28199–86–M0	11 – 41
6HY–28199–86–N0	11 – 41
6HY–28199–86–P0	11 – 41
6HY–28199–86–R0	11 – 41
6H4–41237–00	26 – 19

PART NO. N° PIECES	REF. NO.
6H4–41237–00	27 – 9
682–41237–50	26 – 18
	27 – 8
6FM–41283–00	26 – 22
	27 – 12
6X4–41291–00	41 – 7
6FM–41661–00	25 – 5
	26 – 5
6FM–41662–00	25 – 7
	26 – 7
6FM–42111–00–8D	23 – 2
6X4–42111–02–8D	41 – 1
6X4–42115–00	41 – 21
67D–42119–01	23 – 10
6X4–42119–01	41 – 4
6FM–42121–01–8D	24 – 17
63D–42121–22–8D	41 – 47
65W–42125–00	23 – 7
63D–42126–00	41 – 16
6DR–42126–00	23 – 6
6X4–42128–00	41 – 12
6DR–42129–01	23 – 29
65W–42131–01	23 – 24
6X4–42131–11	41 – 44
6FM–42137–00	23 – 11
6X4–42137–00	41 – 6
6DR–42138–01	23 – 3
6FM–42157–00	26 – 21
	27 – 11
65W–42159–00	23 – 4
6X4–42159–00	41 – 38
66R–42171–00	23 – 19
6FM–42171–00	23 – 15
6FM–42176–00	20 – 2
67D–42177–01	23 – 9
6X4–42177–01	41 – 5
6BG–42384–00	22 – 24
6FM–42508–02	24 – 1
	44 – 1
6FM–42511–00–8D	30 – 1
6FM–42511–10–8D	30 – 1
6FM–42525–00	24 – 5
	44 – 5
6FM–42527–00	24 – 2
	44 – 2
65W–42528–00	24 – 12
	44 – 12
6FM–42561–00	24 – 4

PART NO. N° PIECES	REF. NO.
6FM–42561–00	44 – 4
67C–42562–A0	24 – 10
	44 – 10
6HY–42610–02	2 – 1
6GX–42610–12	2 – 1
6FM–42615–00	2 – 7
6FM–42617–00	10 – 13
6FM–4261A–02	2 – 2
6FM–4261A–12	2 – 2
6FM–42647–00	2 – 10
6FM–42649–00	2 – 5
6FM–42651–00	2 – 3
6FM–42652–00	2 – 8
6BG–42662–01	2 – 6
6FM–42675–01	2 – 13
6FM–42676–01	2 – 14
6DN–42677–11	2 – 15
	2 – 15
6FM–42681–01	2 – 12
6AH–42697–10	2 – 11
6FM–42710–00–8D	22 – 1
6FM–42716–00	22 – 5
65W–42717–00	33 – 9
6FM–42723–01	19 – 12
6BG–42724–01	22 – 25
6FM–42724–01	22 – 8
6FM–42724–11	22 – 8
6FM–42725–01	22 – 9
6G1–42725–01	19 – 11
6X4–42725–01	41 – 46
6AH–42726–01	22 – 22
6H4–42726–01	22 – 23
6FM–42726–11	22 – 10
	27 – 4
6AH–42727–01	22 – 14
6H3–42727–01	43 – 12
6X4–42727–01	42 – 17
6X4–42728–10	41 – 56
6FM–42731–00	28 – 20
6FM–42735–00	22 – 32
6FM–42741–00	22 – 28
6H4–42748–01	22 – 27
69M–42758–01	15 – 5
6FM–42761–00	22 – 6
6FM–42761–10	22 – 6
	27 – 2
6FM–42769–01	32 – 16
6FM–42771–00	22 – 29

PART NO. N° PIECES	REF. NO.
6EE–42794–41	22 – 38
6EE–42794–51	22 – 39
6FM–42801–00	22 – 11
6X4–42821–00	41 – 29
6FM–43111–00–8D	28 – 1
69A–43111–01–8D	29 – 1
6FM–43112–00–8D	28 – 6
69A–43112–02–8D	29 – 6
69A–43113–00	29 – 18
648–43114–01	28 – 5
	28 – 10
	29 – 5
	29 – 10
6E7–43116–00	28 – 4
	28 – 9
	29 – 4
	29 – 9
6E0–43118–01	28 – 2
	28 – 7
	29 – 2
	29 – 7
69A–43131–00	29 – 16
6FM–43131–00	28 – 11
6FM–43131–10	28 – 11
6E5–43145–01	38 – 8
6G5–43145–01	29 – 19
69A–43155–00	29 – 27
6L2–43160–01	28 – 18
6FM–43189–00	29 – 11
65W–43191–00	29 – 12
6FM–43192–00	29 – 13
6FM–43311–00–8D	28 – 22
6HY–43311–00–8D	29 – 21
6FM–43311–10–8D	28 – 22
6HY–43311–10–8D	29 – 21
6L2–43336–10	28 – 37
6FM–43350–00	28 – 31
6J8–43611–01	28 – 39
6FM–43613–00	28 – 36
6FM–43616–00	28 – 26
6FM–43617–00	28 – 30
6FM–43624–00	28 – 33
6FM–43627–00	28 – 41
6FM–43631–00	28 – 25
689–43633–01	24 – 15
	44 – 15
6FM–43641–00	28 – 28
6FM–43646–00	28 – 27

PART NO. N° PIECES	REF. NO.
6FM–43656–00	28 – 32
6FM–43656–10	28 – 35
6AH–43801–00	31 – 20
6AH–43804–00	31 – 62
67C–43805–11	31 – 64
6T4–43808–00	31 – 35
6AH–4380D–00	31 – 11
67C–4380F–10	31 – 69
6HY–4380K–00	31 – 2
6AH–43810–00	31 – 10
6AH–43811–00	31 – 21
69A–43812–00	31 – 24
6AH–43814–00	31 – 7
69G–43818–00	29 – 26
69J–4381C–00	31 – 38
	31 – 56
69A–4381G–00	31 – 50
6AH–4381J–00	31 – 57
69A–43824–00	31 – 45
69G–4382G–00	31 – 33
6AH–43830–00	31 – 26
6HY–43840–00–8D	31 – 1
69A–43841–00	31 – 27
6H1–43844–10	31 – 40
69A–43848–10	31 – 46
69A–4384F–00	31 – 30
6H1–4384G–11	31 – 39
69A–4384H–00	31 – 53
69A–4384M–00	31 – 28
69G–43853–00	31 – 36
6AH–43854–00	31 – 49
6F2–43855–00	31 – 41
6H1–43856–10	31 – 42
6AH–43857–00	31 – 19
6AH–4385E–00	31 – 16
62X–43862–00	31 – 25
67C–43862–10	31 – 65
N35–43862–10	31 – 58
6H1–43866–01	31 – 22
69A–4386A–00	31 – 44
6AH–4386A–00	31 – 15
67C–4386K–10	31 – 68
69A–43871–00	31 – 23
6C5–43871–00	31 – 9
	31 – 13
69A–43878–00	31 – 60
6AH–43878–00	31 – 18
67C–43879–10	31 – 63

PART NO. N° PIECES	REF. NO.
6HY–43880–00	31 – 61
6HY–43881–01	31 – 71
67C–43882–10	31 – 72
6H1–43883–00	31 – 31
	31 – 52
6H1–4388E–11	31 – 5
69G–4388F–00	31 – 37
67C–43892–10	31 – 67
62Y–43894–00	31 – 29
6X4–44100–01	41 – 20
6X4–44102–00	41 – 22
6DR–44111–00–8D	23 – 27
6DR–44113–A0	23 – 35
6DR–44114–00	23 – 45
6X4–44114–00	42 – 15
66R–44116–00	25 – 9
	26 – 9
6DR–44116–00	23 – 36
66R–44118–00	23 – 37
	25 – 10
	26 – 10
6FM–44121–00	25 – 1
	26 – 1
6FM–44125–00	26 – 15
	27 – 5
6X4–44132–00	41 – 24
6X4–44139–01	41 – 8
6FM–44143–00	25 – 2
	26 – 2
6FM–44143–10	25 – 2
	26 – 2
6FM–44150–01	34 – 25
6FM–44150–11	34 – 25
6X4–44159–A0–8D	41 – 39
6DR–44173–00	23 – 28
6X4–44173–00	41 – 40
6X4–44177–00	41 – 11
6X4–44188–00	41 – 14
6X3–44191–00	41 – 42
6FM–44192–00	26 – 16
	27 – 6
66T–44194–10	30 – 9
6L2–44311–01	34 – 9
	47 – 18
6L2–44322–00	34 – 11
	47 – 20
6FM–44323–01	34 – 12
	47 – 21

PART NO. N° PIECES	REF. NO.
6L2–44328–00	34 – 16
	47 – 25
6L2–44352–00	34 – 14
	47 – 23
6FM–44361–00	35 – 1
6FM–44361–10	35 – 1
682–44365–01	35 – 2
	47 – 5
6AH–44365–01	35 – 3
	47 – 6
6L2–44367–11	34 – 13
	47 – 10
	47 – 22
6L2–44368–01	35 – 4
	47 – 7
6BL–44391–00	22 – 13
6P2–44391–00	22 – 36
6FM–44514–10–CA	30 – 6
6FM–44532–00	30 – 7
6FM–44551–00–8D	30 – 14
6FM–44552–00–8D	30 – 15
6FM–44553–00–8D	30 – 24
6FM–44555–11	30 – 17
6E5–44575–01	30 – 21
6FM–44575–01	30 – 21
6FM–45111–00–8D	32 – 5
6HY–45111–00–8D	32 – 5
6FM–45111–10–8D	32 – 5
6FM–45126–00	32 – 2
6L2–45214–00	35 – 9
6L2–45215–00	35 – 10
65W–45251–00	1 – 12
	29 – 41
6FM–45300–03–8D	34 – 1
6FM–45300–13–8D	34 – 1
6L2–45311–02–8D	34 – 2
6L2–45315–A0	34 – 22
	47 – 13
6L2–45318–00	32 – 14
68T–45321–00	32 – 11
6FM–45331–00–CA	34 – 17
6L2–45361–03–8D	34 – 42
664–45371–01	1 – 13
	35 – 7
6L2–45375–00	34 – 24
6FM–45510–00	34 – 26
6FM–45510–10	34 – 26
6L2–45536–00	34 – 6

PART NO. N° PIECES	REF. NO.
6L2–45551–01	34 – 28
6FM–45560–00	34 – 32
6L2–45567–00	34 – 4
6L2–45567–10	34 – 4
6L2–45567–20	34 – 4
6L2–45567–30	34 – 4
6L2–45567–40	34 – 4
6FM–45571–00	34 – 33
6L2–45577–00	34 – 35
6L2–45577–10	34 – 35
6L2–45577–20	34 – 35
6L2–45577–30	34 – 35
6L2–45587–00	34 – 31
6L2–45587–10	34 – 31
65W–45611–00	34 – 36
6FM–45631–00	34 – 38
648–45633–11	34 – 40
648–45635–00	34 – 41
62C–45941–00	35 – 18
664–45941–01	35 – 18
664–45943–01	35 – 18
664–45945–00	35 – 18
664–45947–01	35 – 18
664–45949–02	35 – 18
664–45952–00	35 – 18
664–45954–01	35 – 18
664–45970–00	35 – 18
664–45972–00	35 – 18
6L2–45987–01	35 – 13
689–45997–00	35 – 14
6FM–46241–00	10 – 10
6FM–46297–01	10 – 11
6X4–47731–01	41 – 23
703–48129–00	41 – 28
6X4–48154–00	41 – 17
6X4–48215–00	41 – 3
6X4–48261–00	41 – 26
6Y8–48277–00	45 – 16
6DR–48321–00	23 – 42
63D–48321–11	43 – 2
6FM–48344–00	25 – 12
	26 – 12
	26 – 28
	27 – 18
6FM–48501–02	27 – 1
65W–48511–01	27 – 25
	30 – 27
63D–48538–00	23 – 41

NUMERICAL INDEX
INDEX NUMERIQUE

PART NO. N° PIECES	REF. NO.
63D–48538–00	25 – 14
	26 – 14
	26 – 30
	27 – 20
	43 – 3
	43 – 6
66R–48538–00	23 – 39
6X4–48538–00	41 – 32
6X4–48538–10	41 – 35
6FM–61350–00	38 – 1
68V–81315–01	15 – 15
6FM–81337–00	13 – 27
6FM–81410–01	14 – 2
6FM–81450–12	14 – 1
6FM–81539–00	16 – 10
6FM–81639–01	10 – 14
6AH–81800–10	21 – 1
	39 – 3
689–81807–20	21 – 5
	39 – 7
689–81810–20	21 – 8
	39 – 10
6AH–81811–10	21 – 15
	39 – 17
689–81812–20	21 – 12
	39 – 14
6AH–81820–10	21 – 11
	39 – 13
689–81824–00	21 – 14
	39 – 16
689–81826–20	21 – 22
	39 – 24
689–8182A–00	21 – 21
	39 – 23
689–8182E–00	21 – 19
	39 – 21
689–8182F–00	21 – 20
	39 – 22
689–8182G–00	21 – 18
	39 – 20
689–8182H–00	21 – 16
	39 – 18
689–8182L–00	21 – 17
	39 – 19
6AH–81830–10	21 – 6
	39 – 8
689–81835–00	21 – 7
	39 – 9

PART NO. N° PIECES	REF. NO.
6P2–8183X–00	17 – 14
6AH–81840–00	21 – 13
	39 – 15
689–81847–20	21 – 10
	39 – 12
689–81850–20	21 – 9
	39 – 11
689–81858–00	21 – 4
	39 – 6
6AH–81859–00	21 – 2
	39 – 4
6X4–81860–00	43 – 10
6FM–81860–01	20 – 1
65W–81870–00	19 – 11
	39 – 38
689–81884–00	21 – 3
	39 – 5
6FM–81940–00	17 – 3
	39 – 27
6X4–81942–01	42 – 20
6FM–81948–00	15 – 3
6FM–81949–00	40 – 2
68V–81950–00	17 – 6
6FM–81960–00	16 – 13
6FM–81960–10	16 – 13
	39 – 2
	40 – 1
6FM–81965–00	15 – 13
6FM–81971–00	39 – 33
6FM–81980–01	18 – 8
6EE–81994–41	13 – 33
6EE–81994–51	13 – 34
6EE–81995–41	13 – 31
6EE–81995–51	13 – 32
6AG–81996–01	13 – 35
6FM–82105–01	17 – 8
	39 – 30
6AH–82117–01	17 – 4
	39 – 28
6P2–82119–00	17 – 9
	39 – 31
703–82119–01	27 – 23
63V–82127–00	29 – 43
6FM–82127–00	28 – 24
	29 – 23
67F–82151–00	18 – 5
	39 – 34
	40 – 3

PART NO. N° PIECES	REF. NO.
67F–8215B–10	18 – 6
	39 – 35
	40 – 4
67C–82181–10	31 – 66
6FM–82316–00	16 – 9
6FM–82355–01	19 – 7
67F–82361–00	16 – 5
6AH–82370–00	16 – 2
6FM–82388–00	19 – 5
6FM–82389–00	8 – 25
6FM–82398–00	26 – 31
64J–82504–00	15 – 14
6Y8–82509–10	45 – 8
6X4–82510–42	42 – 1
6Y8–82521–11	45 – 15
703–82532–00	42 – 3
6FM–82535–01	16 – 17
6FM–82540–00	19 – 8
	39 – 37
6X4–82540–00	41 – 27
6FM–82545–01	16 – 18
682–82556–00	23 – 48
	42 – 6
6FM–82563–01	19 – 12
6X4–82563–01	42 – 8
69W–82575–00	42 – 5
6FM–82575–00	23 – 47
676–82577–01	42 – 2
689–8257Y–00	23 – 49
	42 – 7
6FM–82582–00	18 – 7
	27 – 24
6Y8–82582–11	18 – 4
6X4–82586–11	43 – 9
6FM–82588–00	19 – 14
6FM–82590–02	18 – 1
6FM–82590–12	18 – 1
6FM–82590–22	18 – 1
6FM–82590–43	18 – 1
60V–8259F–01	19 – 13
6X4–83383–00	42 – 10
	45 – 5
6X4–83386–00	42 – 11
	45 – 6
6FM–83589–00	19 – 2
	42 – 18
6X4–83653–20	42 – 13
62Y–84301–10	19 – 1

PART NO. N° PIECES	REF. NO.
6C5–84301–10	42 – 14
6D5–84340–01	27 – 21
6Y8–8454G–00	45 – 11
67C–85415–00	19 – 4
6X4–85415–00	42 – 19
64J–85516–01	15 – 4
6FM–85546–00	15 – 2
68V–85548–01	15 – 7
6FM–85561–01	14 – 9
6F5–85570–13	16 – 1
6CB–85580–01	14 – 3
6CJ–85790–00	15 – 16
6HY–8591A–20	15 – 1
6Y8–86260–03	45 – 2
6AA–86261–01	45 – 3
6Y8–86267–00	45 – 1
6FM–8711E–00	16 – 15
6FM–W0001–01	46 – 1
6FM–W0001–21	47 – 1
6FM–W0078–02	1 – 15
	47 – 17
6FM–W0084–03–8D	23 – 1
6HY–W009A–11–1S	5 – 1
6FM–W009B–02–1S	3 – 1
6FM–W8180–05	39 – 1
63P–W8195–00	17 – 11
90101–06020	29 – 42
90101–06032	9 – 28
	11 – 27
90101–06M18	28 – 15
90101–08M02	30 – 19
90101–08M88	28 – 44
	29 – 45
90101–09M01	38 – 6
90101–12014	41 – 48
90105–06035	10 – 17
	13 – 28
90105–06M07	3 – 8
	5 – 10
	23 – 5
	32 – 4
	32 – 10
90105–081A7	10 – 3
90105–08M02	35 – 8
90105–09010	5 – 6
90109–06316	22 – 7
	27 – 3
90109–06M84	28 – 42

PART NO. N° PIECES	REF. NO.
90109–06M86	19 – 6
	19 – 9
	25 – 6
	25 – 8
	25 – 11
	26 – 6
	26 – 8
	26 – 11
90109–06MA1	29 – 15
90109–08043	28 – 21
90109–08241	30 – 8
90109–08M87	28 – 29
90110–08121	29 – 37
90111–06144	22 – 34
90116–10064	24 – 16
	30 – 26
90119–06054	6 – 9
90119–06291	9 – 27
	22 – 2
90119–06293	15 – 6
90119–06311	16 – 20
90119–06MA3	3 – 17
	5 – 7
90119–06MA4	8 – 2
90119–06MA6	8 – 1
90119–08093	3 – 4
90151–05M05	35 – 11
90152–05007	41 – 9
90152–05011	23 – 12
90157–05M19	36 – 4
90159–06062	22 – 30
90167–06M00	45 – 12
90170–06015	25 – 3
	26 – 3
90170–09M03	38 – 4
90170–30009	10 – 8
90171–14013	35 – 16
90179–10M14	34 – 29
90179–16M05	14 – 5
90183–061A8	22 – 33
90185–05002	35 – 12
90185–08057	28 – 46
	29 – 38
	29 – 47
90185–09M01	38 – 3
90185–10027	24 – 18
	30 – 28
	43 – 1

PART NO. N° PIECES	REF. NO.
90185–10M14	24 – 9
	44 – 9
90185–12M12	41 – 55
90185–22043	28 – 13
	29 – 20
90201–06016	11 – 29
90201–06M30	45 – 13
90201–06M62	27 – 14
90201–08120	30 – 10
90201–08784	10 – 4
90201–08M00	29 – 31
90201–08M08	30 – 23
90201–08MA4	28 – 47
	29 – 48
90201–09014	30 – 11
90201–10049	24 – 19
	30 – 29
90201–10077	30 – 18
90201–10081	38 – 7
90201–106M5	24 – 13
	44 – 13
90201–10M02	23 – 13
90201–10M20	38 – 2
90201–12035	41 – 52
90201–131M4	6 – 12
90201–16M44	14 – 6
90201–20417	34 – 34
90201–43M00	23 – 20
90202–10M56	24 – 11
	44 – 11
90202–26M59	23 – 34
90202–43M57	23 – 22
90206–10M24	28 – 43
90206–12M22	41 – 50
90206–26M25	23 – 33
90206–43M22	23 – 21
90243–04M01	28 – 3
	28 – 8
	29 – 3
	29 – 8
90249–12M36	29 – 33
90250–05010	34 – 39
90266–04M01	2 – 4
	2 – 9
90280–03024	34 – 27
	47 – 27
90280–03M01	10 – 9
90280–05013	14 – 4

NUMERICAL INDEX
INDEX NUMERIQUE

PART NO. N° PIECES	REF. NO.
90282–05012	10 – 5
90338–08M19	29 – 40
	29 – 40
90340–08002	34 – 7
90340–14M06	33 – 12
90381–12M10	29 – 34
90381–12M11	29 – 35
90381–45001	30 – 2
90386–08032	41 – 15
90386–12003	41 – 53
90386–16MA7	29 – 28
90386–16MA8	29 – 29
90386–22MA4	28 – 12
	29 – 17
90386–26MA3	23 – 32
	41 – 43
90386–38002	30 – 5
90386–38M32	30 – 3
90386–40M99	23 – 23
90387–04001	19 – 15
90387–05053	24 – 8
	44 – 8
90387–05054	24 – 7
	44 – 7
90387–06176	9 – 26
	22 – 4
90387–06289	16 – 19
90387–06318	8 – 11
90387–06320	11 – 28
90387–06321	28 – 34
90387–06369	28 – 14
90387–06M59	26 – 23
	27 – 13
90387–06M69	9 – 25
90387–10M42	38 – 5
90387–12M02	41 – 51
90387–13006	6 – 10
90387–16M02	29 – 30
90430–08003	1 – 14
	34 – 8
	47 – 8
90430–08143	1 – 10
	33 – 11
	47 – 3
90430–14115	15 – 17
90430–14M09	1 – 11
	33 – 13
	47 – 4

PART NO. N° PIECES	REF. NO.
90445–09012	12 – 9
90445–09063	12 – 8
90445–09091	12 – 2
90445–11182	22 – 21
90446–09M42	27 – 22
90446–10M82	20 – 3
90446–14MH7	29 – 24
90446–15003	31 – 73
90446–20MF5	23 – 43
90464–07017	16 – 4
90464–07259	8 – 24
90464–08M07	42 – 4
90464–09018	16 – 6
90464–09M42	43 – 8
90464–09M47	18 – 2
90464–10M59	20 – 4
90464–11121	16 – 7
	16 – 11
90464–12002	18 – 3
90464–12015	8 – 27
90464–12183	8 – 28
	19 – 10
90464–13227	19 – 18
90464–16001	20 – 5
90464–16240	8 – 13
90464–20006	8 – 29
90464–20181	8 – 14
	15 – 9
90464–28003	18 – 12
90465–08059	5 – 17
90465–08M83	3 – 20
90465–11M10	12 – 12
	12 – 20
	16 – 16
	19 – 17
	22 – 20
	22 – 26
	45 – 10
90465–11M52	18 – 10
90465–11M59	8 – 31
	14 – 11
	18 – 13
90465–13M11	15 – 11
	17 – 15
	18 – 11
90465–13M18	5 – 22
	11 – 37
	15 – 10

PART NO. N° PIECES	REF. NO.
90465–13M39	43 – 11
90465–13M97	15 – 12
	29 – 25
90465–15011	8 – 30
90467–08092	12 – 29
90467–08M10	12 – 13
	12 – 27
	12 – 28
90467–090A4	12 – 25
90467–09M17	11 – 35
90467–10M04	11 – 36
90467–110A1	12 – 14
	12 – 24
90467–120A7	11 – 34
90468–10005	43 – 4
	43 – 7
90468–18008	25 – 13
	26 – 13
	26 – 17
	26 – 29
	27 – 7
	27 – 19
90480–10627	10 – 12
90480–13M24	8 – 22
	22 – 31
	22 – 35
	22 – 37
90480–14M54	32 – 13
90480–21M82	22 – 3
90480–25003	16 – 3
90501–10065	34 – 37
90501–120A5	6 – 11
90501–23215	23 – 14
	41 – 13
90502–10M07	28 – 19
91312–05025	31 – 55
91380–05012	8 – 26
91380–06025	23 – 46
91490–16010	23 – 8
91490–20010	41 – 10
	41 – 19
91490–30025	35 – 17
91690–30018	29 – 14
92902–06200	31 – 17
92990–06200	26 – 24
92990–08600	28 – 45
	29 – 39
	29 – 46

PART NO. N° PIECES	REF. NO.
92990–12200	41 – 49
92990–12600	41 – 54
92990–14200	35 – 15
92995–06600	28 – 16
92995–08200	24 – 14
	44 – 14
92995–10600	30 – 20
93101–13001	33 – 2
	47 – 2
93101–20048	34 – 19
	47 – 11
93101–20M07	34 – 46
	47 – 15
93102–22010	10 – 18
	46 – 2
93102–25014	4 – 10
	46 – 7
93102–37004	4 – 9
	46 – 6
93210–04279	45 – 9
93210–06001	31 – 48
93210–06ME6	34 – 20
	47 – 12
93210–07003	31 – 6
93210–10010	23 – 16
93210–12N52	31 – 34
93210–13M63	3 – 12
	5 – 16
	46 – 5
	46 – 9
93210–16275	38 – 9
93210–20M65	11 – 30
	46 – 16
93210–24709	31 – 8
	31 – 12
93210–24M79	5 – 20
	46 – 15
93210–320A7	31 – 4
93210–37MH7	30 – 4
93210–45161	34 – 10
	47 – 9
	47 – 19
93210–60M99	34 – 48
	47 – 16
93210–60MA3	34 – 44
	47 – 14
93306–00612	34 – 43
93315–22004	34 – 18

PART NO. N° PIECES	REF. NO.
93315–22004	34 – 45
93315–220V9	34 – 5
93332–00005	34 – 3
93341–320U0	34 – 30
93420–30042	32 – 15
93450–17129	4 – 8
93501–08001	31 – 14
	31 – 43
	31 – 51
93602–15250	31 – 47
93604–10M03	32 – 7
93604–12M07	34 – 21
	35 – 5
	47 – 26
93606–14081	31 – 54
93606–25M00	33 – 7
93700–06002	41 – 2
93700–06004	28 – 23
	29 – 22
94702–00418	1 – 7
	5 – 23
95023–06025	14 – 10
95023–06030	14 – 7
95380–04600	11 – 25
95380–05700	26 – 20
	27 – 10
95380–06600	41 – 18
95380–06700	25 – 4
	26 – 4
	28 – 17
95380–08600	11 – 12
95380–08800	30 – 12
	30 – 22
95380–10700	23 – 26
95780–06300	45 – 14
95780–10300	23 – 25
95817–06025	33 – 16
95822–06025	33 – 6
95D75–06016	11 – 13
95D95–06014	23 – 38
	23 – 40
95D95–06016	3 – 21
	16 – 12
	26 – 26
	27 – 16
95D95–06020	8 – 3
	8 – 9
	11 – 3

PART NO. N° PIECES	REF. NO.
95D95–06020	16 – 8
	16 – 14
	17 – 12
95D95–06025	8 – 6
	8 – 19
95D95–06040	8 – 4
95D95–06045	26 – 25
	27 – 15
97080–06020	34 – 23
97080–08016	29 – 32
97513–06540	3 – 5
97513–08535	17 – 2
	39 – 26
97513–08545	17 – 1
	39 – 25
97595–05510	32 – 8
97595–05516	14 – 8
97595–05520	24 – 6
	44 – 6
97602–04316	31 – 70
97607–04210	5 – 12
97780–60520	22 – 19
97780–60620	15 – 8
	17 – 7
	42 – 16
	45 – 7
97780–60920	23 – 30
	41 – 41
97880–06035	45 – 12
97980–05216	32 – 3
97980–06216	8 – 23
	42 – 9
	45 – 4
97985–04116	19 – 16
97985–06212	19 – 3
97985–06216	41 – 45
97D95–06008	32 – 12
97D95–06014	41 – 34
	41 – 37
	42 – 12
97D95–08014	24 – 3
	33 – 10
	44 – 3
97E75–08555	33 – 8
97E95–06510	29 – 44
97E95–06512	22 – 12
97E95–06516	18 – 9
97E95–06520	13 – 28

PART NO. N° PIECES	REF. NO.
97E95–06520	34 – 47
97E95–06530	41 – 31
97E95–06540	34 – 15
	47 – 24
97E95–06610	17 – 5
	17 – 13
	39 – 29
97E95–08516	17 – 10
	39 – 32
97E95–08530	30 – 13
	30 – 25
	32 – 6
97E95–08535	23 – 31
97E95–08540	41 – 30
97E95–08545	30 – 16
97E95–10535	35 – 6
98980–05025	3 – 10
	3 – 19
	5 – 14
99002–03600	31 – 32
99080–04600	23 – 44
99080–05600	28 – 38
	28 – 40
99080–10600	29 – 36
99530–08012	3 – 3
	5 – 5