YAMAHA

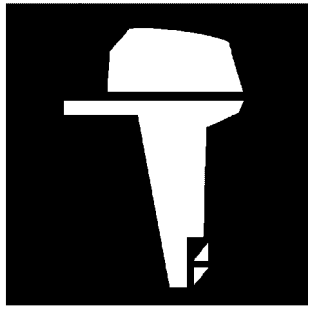

PARTS CATALOGUE
CATALOGUE DE PIECES DETACHEES

F300CB-2026 (6KF6)

316KF-300F1

( )

YAMAHA GENUINE Parts & Accessories

F300CB
PARTS CATALOGUE
©2026 by Yamaha Motor Co., Ltd.
1st edition, June 2026
All rights reserved.
Any reprinting or unauthorized use
without the written permission of
Yamaha Motor Co., Ltd.
is expressly prohibited.
Printed in Japan.

F300CB
CATALOGUE DE PIECES DETACHEES
©2026 par Yamaha Motor Co., Ltd.
1re édition, juin 2026
Tous droits réservés
Toute réimpression ou utilisation
non autorisée sans la permission écrite
de Yamaha Motor Co., Ltd.
est formellement interdite.
Imprimé au Japon

FOREWORD

This Parts Catalogue is related to the parts for the model(s) on the cover page. When you are ordering replacement parts, please refer to this Parts Catalogue and quote both part numbers and part names correctly.

1. Modifications or additions which have been made after the issue of the Parts Catalogue will be announced in the Parts News.
   It is advisable that you make the necessary corrections to the Parts Catalogue according to the Parts News.

2. Abbreviations
   The following abbreviations are used in this Parts Catalogue.
   "UR" Use specified parts number.
   "UN" Use as many as needed.
   "AP" Alternate Parts
   "LM" Locally Made (Parts need to be ordered locally)
   "F#" Frame No. (Applicable machine No.)
   "O/S" Over Size

3. The number of components for assembly
   - Parts, which are to be supplied in an assembly, are listed with a dot (.) in front of the part name as shown below.
   - The numeral appearing to the right of each component part indicates the quantity of parts for each assembly unit.

PART NO.	DESCRIPTION	Q'TY	REMARKS
2F5–83310–60	FRONT FLASHER LIGHT ASSY	2	
115–83311–60	.BULB (6V–18W)	1	

4. Applicable colours of graphics are represented in the "REMARKS" as shown below.

PART NO.	DESCRIPTION	Q'TY	REMARKS
2N4–24110–00–X5	FUEL TANK COMP.	2	MXR
3J1–24240–10	.GRAPHIC, FUEL TANK	1	FOR MXR

5. Note that the illustrations for reference in finding parts numbers are not to be used for assembling. When assembling, please use the applicable service manual.

6. The asterisk (*) before a reference number indicates modified items after the first edition.

7. Applicable Serial No.
   Engine Serial No.

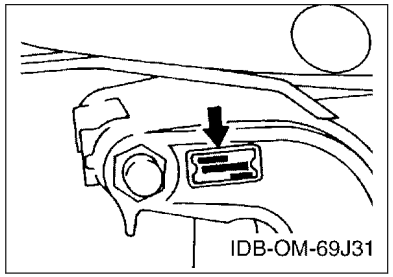

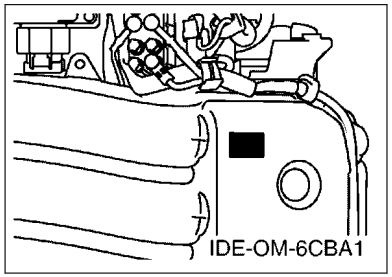

8. Applicable Engine Starting Serial No.

Model	Serial No.	Model	Serial No.
F300CB	6KF-1026264		

9. Applicable Colour Code

Abbreviation	Colour Name	Colour Code
DBN1	DARK BLUISH GRAY 1	008D
WPA	WHITE PEARL A	00CE

10. Quantity Column Information

Column No.	Name Of Q'ty Column	Applicable Model
1	XCB	F300XCB
2	XCB2	F300XCB2
3	NCB	F300NCB
4	NCB2	F300NCB2

AVANT–PROPOS

Ce catalogue de pièces détachées concerne les pièces pour le(s) modèle(s) indiqué(s) sur la page de couverture. Lorsque vous commandez des pièces de rechange, veuillez vous référer à ce catalogue de pieces détachées et indiquer clairement les numéros et les noms des pièces détachées.

1. Les modifications ou ajouts ayant été effectués après la parution du catalogue de pièces détachées seront décrits dans les Bulletins d'information concernant les pièces détachées.
   Il est recommandé que vous apportiez les corrections nécessaires au catalogue des pièces détachées en vous référant aux Bulletins d'information.

2. Abréviations
   Dans ce catalogue, les abréviations suivantes sont utilisées:
   "UR" Utiliser le numéro de pièces spécifié.
   "UN" Utiliser autant que nécessaire.
   "AP" Pièces de substitution
   "LM" Fabrication locale (les pièces doivent être commandées localement.)
   "F#" N° de cadre (applicable au N° de série)
   "O/S" Surdimensionné

3. Nombre de pièces d'un assemblage
   - Les pièces fournies comme composants d'un assemblage sont précédées d'un point (.) de la manière indiquée ci–dessous.
   - Le chiffre apparaissant à la droite de chaque composant indique la quantité de pièces pour chaque unité d'assemblage.

N° PIECES	DESCRIPTION	QTE	REMARQUES
2F5–83310–60	ENS. CLIGNOTANT AVANT	2	
115–83311–60	.AMPOULE (6V–18W)	1	

4. Les couleurs concernant les graphiques sont indiquées dans la colonne "REMARQUES", comme indiqué ci–dessous.

N° PIECES	DESCRIPTION	QTE	REMARQUES
2N4–24110–00–X5	RESERVOIR A ESSENCE.	2	MXR
3J1–24240–10	.GRAPHIQUE	1	POUR MXR

5. Veuillez noter que les illustrations sont indiquées à titre de référence pour trouver les numéros de pièces, non pour être utilisées lors de l'assemblage. Lors de l'assemblage, veuillez utiliser le manuel d'entretien adéquat.

6. L'astérisque (*) placé devant un numéro de référence indique des éléments qui ont été modifiés après la première édition.

7. N° de série applicable
   N° de Série du moteur

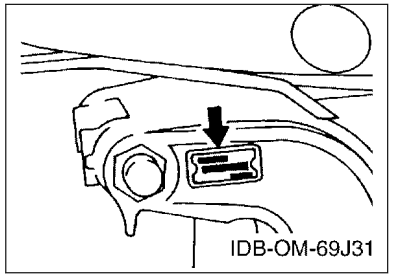

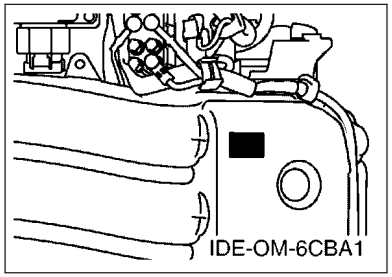

8. N° de série initial du moteur applicable

Modèle	N° de série	Modèle	N° de série
F300CB	6KF-1026264		

9. Code couleur applicable

Abréviation	Nom de la couleur	Code couleur
DBN1	DARK BLUISH GRAY 1	008D
WPA	WHITE PEARL A	00CE

10. Informations relatives à la colonne Quantité

N° de la colonne	Nom de la colonne Qté	Modèle applicable
1	XCB	F300XCB
2	XCB2	F300XCB2
3	NCB	F300NCB
4	NCB2	F300NCB2

CONTENTS

SCHEDULED SERVICE PARTS....1
TOP COWLING....2
CYLINDER & CRANKCASE 1....4
CRANKSHAFT & PISTON....6
CYLINDER & CRANKCASE 2....7
CYLINDER & CRANKCASE 3....9
CYLINDER & CRANKCASE 4....10
VALVE....11
INTAKE 1....14
INTAKE 2....15
THROTTLE BODY ASSY 1....17
THROTTLE BODY ASSY 2....18
FUEL INJECTION PUMP 1....19
FUEL INJECTION PUMP 2....21
FUEL 1....22
FUEL 2....24
GENERATOR....25
ELECTRICAL 1....26
ELECTRICAL 2....28
ELECTRICAL 3....29
ELECTRICAL 4....31
ELECTRICAL 5....33
ELECTRICAL 6....34
STARTING MOTOR....35
BOTTOM COWLING 1....36
BOTTOM COWLING 2....38
BOTTOM COWLING 3....40
CONTROL....41
BRACKET 1....43
BRACKET 2....45
BRACKET 3....46
POWER TRIM & TILT ASSY 1....48
POWER TRIM & TILT ASSY 2....52
UPPER CASING....53
OIL PAN....55
LOWER CASING & DRIVE 1....56
LOWER CASING & DRIVE 2....61
STEERING GUIDE....64
OPTIONAL PARTS 1....65
OPTIONAL PARTS 2....66
OPTIONAL PARTS 3....67
OPTIONAL PARTS 4....72
OPTIONAL PARTS 5....76
OPTIONAL PARTS 6....80
OPTIONAL PARTS 7....82
REPAIR KIT 1....83
REPAIR KIT 2....84

INDEX

NUMERICAL INDEX....86

TABLE DES MATIERES

PIECES MAINTENANCE PERIODIQUE.....1
CAPOT SUPERIEUR..... 2
CYLINDRE & CARTER 1..... 4
VILEBREQUIN & PISTON.....6
CYLINDRE & CARTER 2..... 7
CYLINDRE & CARTER 3..... 9
CYLINDRE & CARTER 4..... 10
SOUPAPE..... 11
ADMISSION 1.....14
ADMISSION 2.....15
CARTER D'ACCELERATEUR 1.....17
CARTER D'ACCELERATEUR 2.....18
POMPE A INJECTEUR 1..... 19
POMPE A INJECTEUR 2..... 21
CARBURANT 1..... 22
CARBURANT 2..... 24
GENERATRICE.....25
PARTIE ELECTRIQUE 1.....26
PARTIE ELECTRIQUE 2.....28
PARTIE ELECTRIQUE 3.....29
PARTIE ELECTRIQUE 4.....31
PARTIE ELECTRIQUE 5.....33
PARTIE ELECTRIQUE 6.....34
DEMARREUR ELECTRIQUE.....35
CAPOT INFERIEUR 1.....36
CAPOT INFERIEUR 2.....38
CAPOT INFERIEUR 3.....40
COMMANDE..... 41
SUPPORT 1..... 43
SUPPORT 2..... 45
SUPPORT 3..... 46
PUISSANCE PARER ET INCLINER 1..... 48
PUISSANCE PARER ET INCLINER 2..... 52
FOURREAU.....53
VENTILATEUR D'HUILE..... 55
BOITIER D'HELICE TRANSMISSION1.....56
BOITIER D'HELICE TRANSMISSION2.....61
FIXATION DE DIRECTION..... 64
PIECES OPTIONNELLES 1.....65
PIECES OPTIONNELLES 2.....66
PIECES OPTIONNELLES 3.....67
PIECES OPTIONNELLES 4.....72
PIECES OPTIONNELLES 5.....76
PIECES OPTIONNELLES 6.....80
PIECES OPTIONNELLES 7.....82
KITS DE REPARATION 1..... 83
KITS DE REPARATION 2..... 84

INDEX

INDEX NUMERIQUE.....86

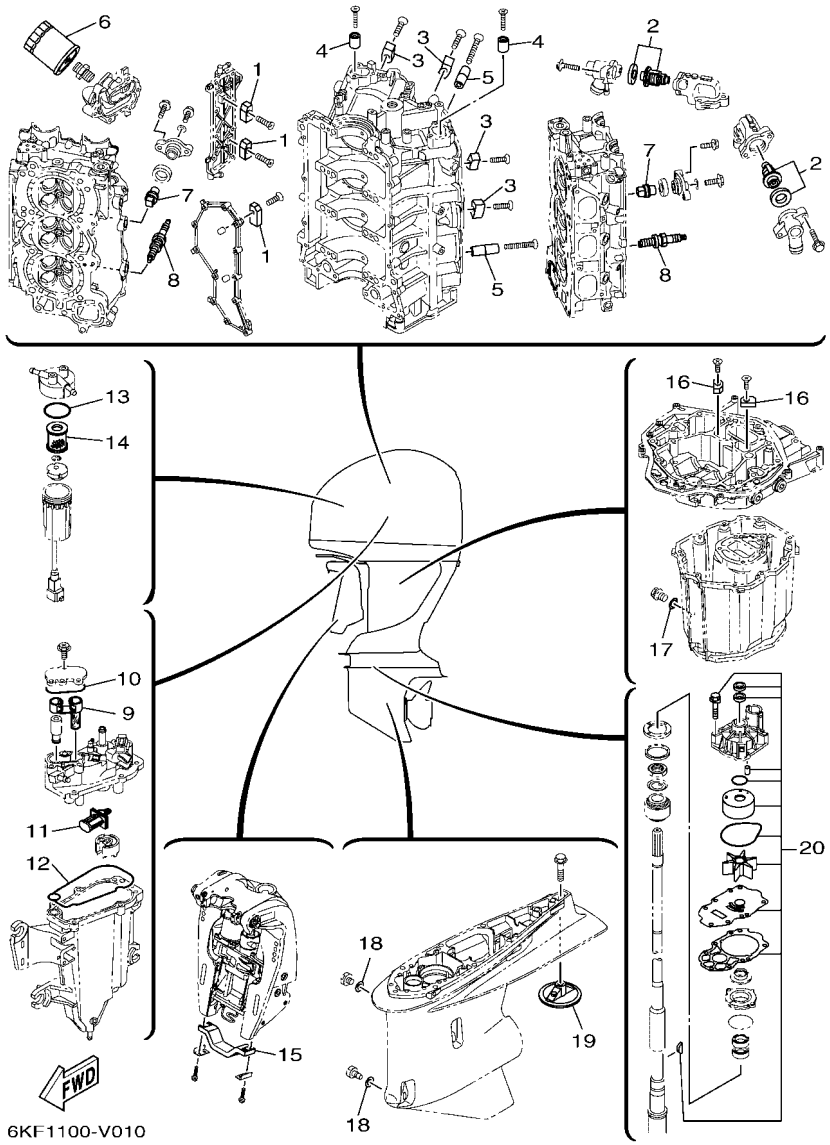

FIG. 1 SCHEDULED SERVICE PARTS — PIECES MAINTENANCE PERIODIQUE

REF. NO.	PART NO. N° PIECES	DESCRIPTION DESCRIPTION	XCB	XCB2	NCB	NCB2		REMARKS REMARQUES
1	63P–11325–01	ANODE ANODE	4	4	4	4		
2	6CE–12411–00	THERMOSTAT THERMOSTAT	2	2	2	2		
3	6AW–1132P–00	ANODE 5 ANODE 5	4	4	4	4		
4	68T–11325–00	ANODE ANODE	2	2	2	2		
5	6AW–1132N–01	ANODE 4 ANODE 4	2	2	2	2		
6	N26–13440–04	ELEMENT ASSY, OIL CLEANER ELEMENT, FILTRE A HUILE	1	1	1	1		
7	6ML–11325–00	ANODE ANODE	8	8	8	8		
8	94702–00400	PLUG, SPARK (NGK LFR6A-11) BOUGIE D'ALLUMAGE(NGK LFR6A-11	6	6	6	6		
9	6CB–24501–01	FILTER, FUEL FILTRE	1	1	1	1		
10	6CB–13016–00	O-RING JOINT TORIQUE	1	1	1	1		
11	63P–13915–00	FILTER FILTRE	1	1	1	1		
12	6CB–14984–00	GASKET, FLOAT CHAMBER JOINT, CUVE DE FLOTTEUR	1	1	1	1		
13	6P3–24564–00	GASKET JOINT	1	1	1	1		
14	6P3–24563–02	ELEMENT, FILTER ELEMENT, FILTRE	1	1	1	1		
15	6G5–45251–02	ANODE ANODE	1	1	1	1		
16	63P–11325–11	ANODE ANODE	2	2	2	2		
17	90430–14M09	GASKET JOINT	1	1	1	1		
18	90430–08003	GASKET JOINT	2	2	2	2		
19	6CE–45373–00	ANODE ANODE	1	1	1	1		
20	6CE–W0078–02	WATER PUMP REPAIR KIT KIT DE REPARATION DE LA POMPE	1	1	1	1		

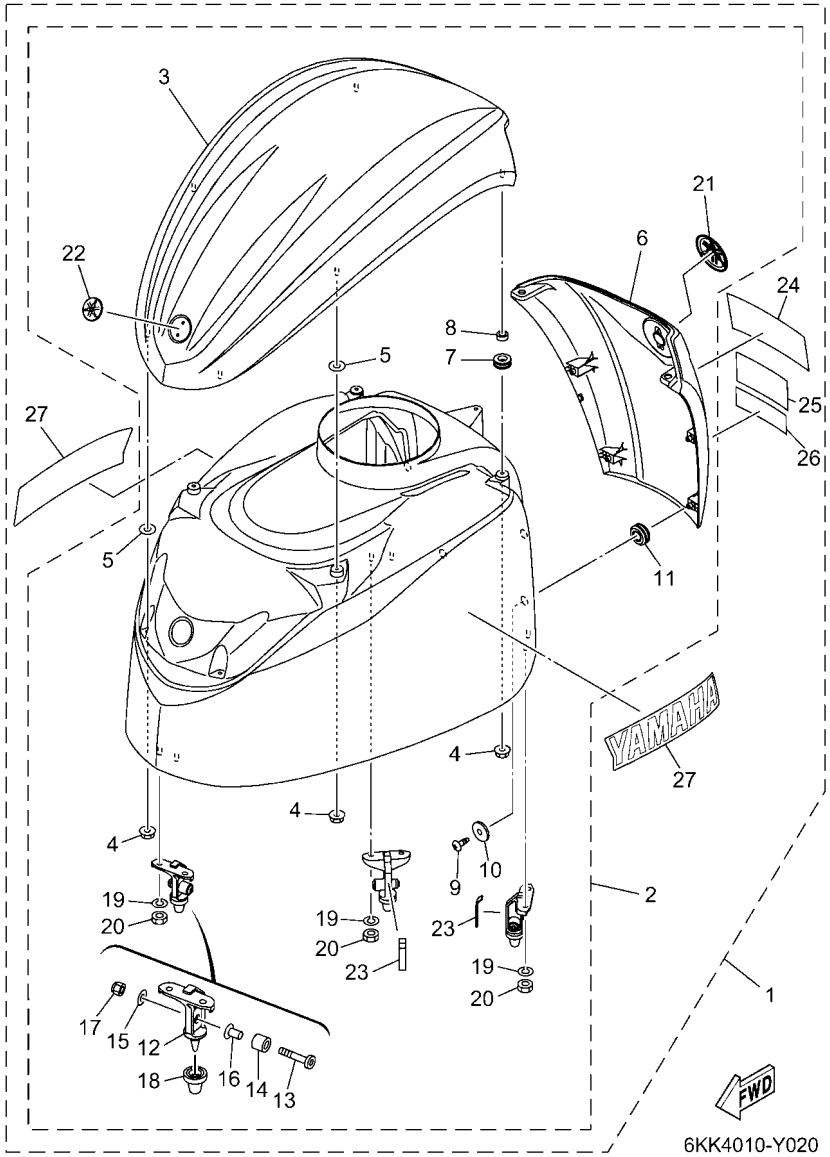

FIG. 2 TOP COWLING — CAPOT SUPERIEUR

REF. NO.	PART NO. N° PIECES	DESCRIPTION DESCRIPTION	XCB	XCB2	NCB	NCB2		REMARKS REMARQUES
1	6KF–42610–01–8D	TOP COWLING ASSY CAPOT (ENS.)	1		1			GRAY GRAY
	6KF–42610–11–CE	TOP COWLING ASSY CAPOT (ENS.)		1		1		WHITE WHITE
2	6KA–4261A–01–8D	.TOP COWLING W/O GRAPHICS .CAPOT SUPERIEUR SANS GRAPHIQUE	1		1			GRAY GRAY
	6KA–4261A–01–CE	.TOP COWLING W/O GRAPHICS .CAPOT SUPERIEUR SANS GRAPHIQUE		1		1		WHITE WHITE
3	6KA–42613–00–8D	..MOLDING, AIR DUCT ..MANCHON A AIR	1		1			GRAY GRAY
	6KA–42613–00–CE	..MOLDING, AIR DUCT ..MANCHON A AIR		1		1		WHITE WHITE
4	90179–06M28	..NUT ..ECROU	7	7	7	7		
5	6CB–42545–00	..WASHER, PLAIN ..RONDELLE, PLATE	4	4	4	4		
6	6KA–42625–00–8D	..PANEL, REAR ..PANNEAU	1		1			GRAY GRAY
	6KA–42625–00–CE	..PANEL, REAR ..PANNEAU		1		1		WHITE WHITE
7	90480–13004	..GROMMET ..PASSE-FIL	2	2	2	2		
8	90387–07054	..COLLAR ..COLLERETTE	2	2	2	2		
9	97780–50016	..SCREW, TAPPING ..VIS, TETE BOMBEE	4	4	4	4		
10	90201–053R1	..WASHER, PLATE ..RONDELLE, PLATE	4	4	4	4		
11	90480–16009	..GROMMET ..PASSE-FIL	4	4	4	4		
12	6CB–42647–B0	..HOLDER, CLAMP BAND ..SUPPORT, SANDOW DE SERRAGE	3	3	3	3		
13	90111–08078	..BOLT, HEXAGON SOCKET BUTTON ..BOULON	3	3	3	3		
14	90387–10094	..COLLAR ..COLLERETTE	3	3	3	3		
15	92990–08600	..WASHER, PLATE ..RONDELLE, PLATE	3	3	3	3		
16	90387–08M45	..COLLAR ..COLLERETTE	3	3	3	3		
17	95780–08300	..NUT, FLANGE ..ECROU	3	3	3	3		
18	6AW–42663–01	..DAMPER 2 ..AMORTISSEUR 2	3	3	3	3		
19	92990–06100	..WASHER, SPRING ..RONDELLE, GROWER	6	6	6	6		
20	95380–06600	..NUT, HEXAGON ..ECROU	6	6	6	6		
21	6KN–42697–00	..TUNING FORK MARK ..MARQUE, YAMAHA	1	1	1	1		
22	6LB–42697–00	..TUNING FORK MARK ..MARQUE, YAMAHA	1	1	1	1		
23	6CB–42134–01	..COVER ..CAPOT	2	2	2	2		

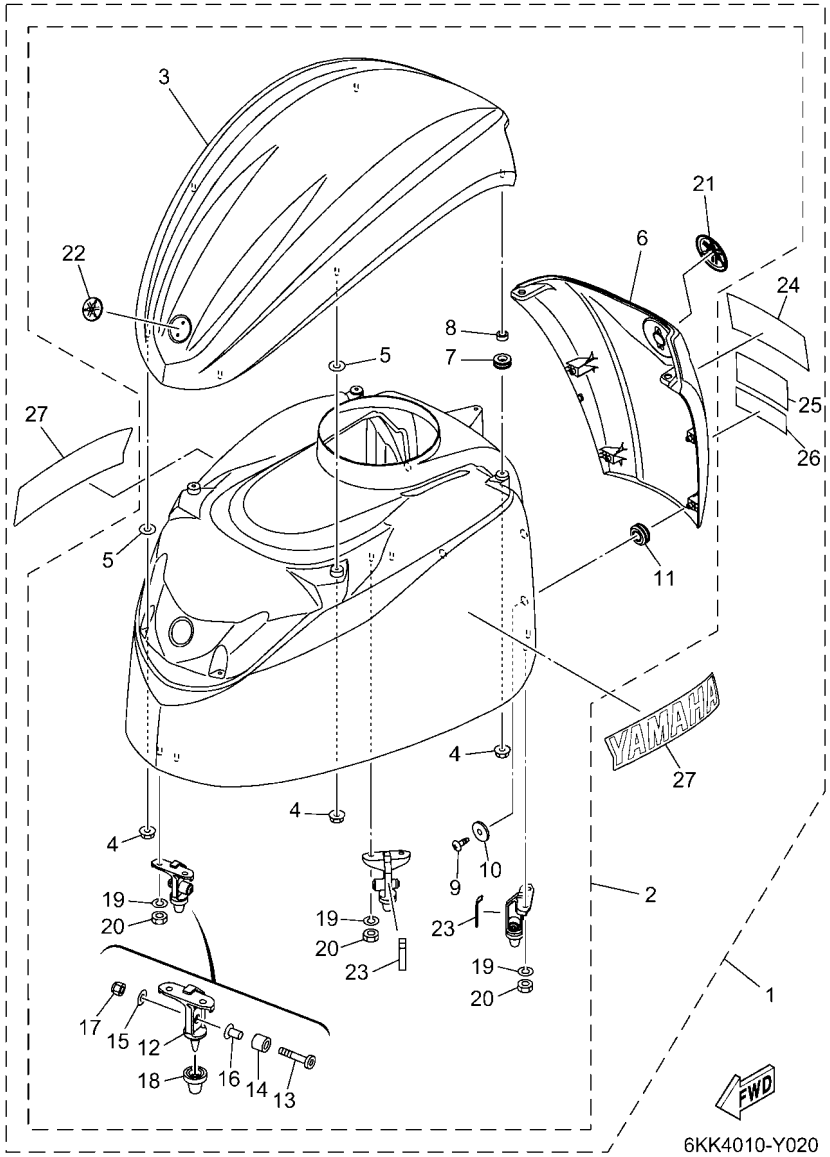

FIG. 2 TOP COWLING — CAPOT SUPERIEUR

REF. NO.	PART NO. N° PIECES	DESCRIPTION DESCRIPTION	XCB	XCB2	NCB	NCB2		REMARKS REMARQUES
24	6KF–42678–00	.GRAPHIC, REAR .ADHESIF, ARRIERE	1	1	1	1		
25	6KF–4267A–00	.GRAPHIC, REAR 2 .ADHESIF, ARRIERE 2	1	1	1	1		
26	6KF–42682–00	.MARK, COWLING .ADHESIF, CAPOT	1	1	1	1		
27	6KF–2153A–00	.EMBLEM, YAMAHA .EMBLEME, YAMAHA	2		2			FOR GRAY COWL. FOR GRAY COWL.
	6KF–2153A–10	.EMBLEM, YAMAHA .EMBLEME, YAMAHA		2		2		FOR WHITE COWL. FOR WHITE COWL.

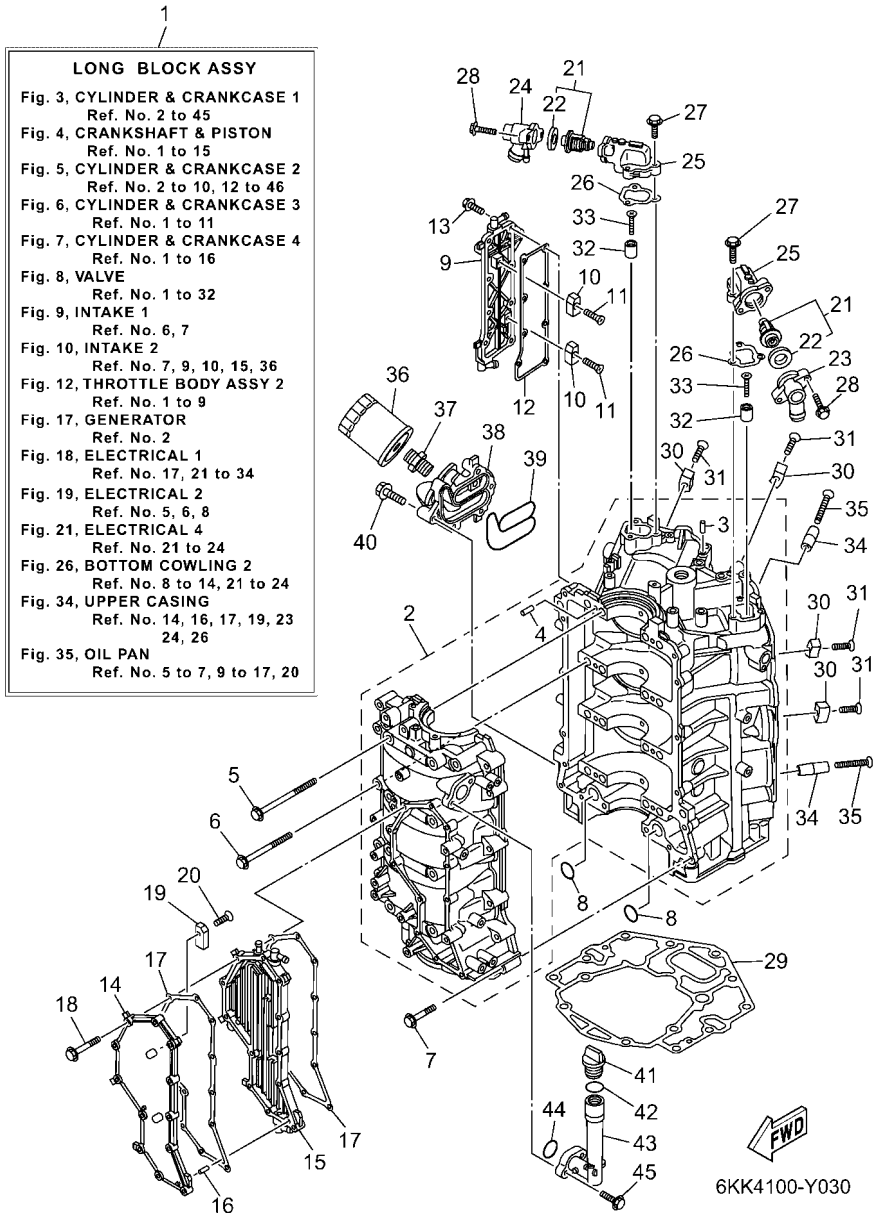

FIG. 3 CYLINDER & CRANKCASE 1 — CYLINDRE & CARTER 1

REF. NO.	PART NO. N° PIECES	DESCRIPTION DESCRIPTION	XCB	XCB2	NCB	NCB2		REMARKS REMARQUES
1	6KA–11000–01	LONG BLOCK ASSY SOUS-ASSEMBLEE DU MOTEUR	1	1	1	1		
2	6CE–15100–10	CRANKCASE ASSY CARTER DE MOTEUR COMPLET	1	1	1	1		
3	93606–12019	.PIN, DOWEL .GOUPILLE	3	3	3	3		
4	93606–12019	.PIN, DOWEL .GOUPILLE	8	8	8	8		
5	6CB–15187–00	BOLT BOULON	8	8	8	8		
6	6CB–15481–00	BOLT 1 BOULON 1	8	8	8	8		
7	90105–08175	BOLT, FLANGE BOULON, A COLLERETTE	16	16	16	16		
8	93210–26658	O-RING JOINT TORIQUE	2	2	2	2		
9	6CE–1131C–00–9S	COVER, JOINT COUVERCLE, RACCORDEMENT	1	1	1	1		
10	63P–11325–01	ANODE ANODE	2	2	2	2		
11	90151–06M02	SCREW, COUNTERSUNK VIS, TETE NOYEE	2	2	2	2		
12	6ML–1131B–00	GASKET, COVER JOINT, COUVERCLE	1	1	1	1		
13	90105–06M07	BOLT, FLANGE BOULON, A COLLERETTE	8	8	8	8		
14	6CE–15411–00–9S	COVER, CRANKCASE 1 COUVERCLE 1, CARTER MOTEUR	1	1	1	1		
15	6CE–15421–10–9S	COVER, CRANKCASE 2 COUVERCLE 2, CARTER MOTEUR	1	1	1	1		
16	91690–40010	PIN, SPRING AGRAFFE	1	1	1	1		
17	6CB–15451–01	GASKET, CRANKCASE COVER 1 JOINT, COUVERCLE DE CARTER 1	2	2	2	2		
18	90105–06151	BOLT, FLANGE BOULON, A COLLERETTE	12	12	12	12		
19	63P–11325–01	ANODE ANODE	2	2	2	2		
20	90151–06M02	SCREW, COUNTERSUNK VIS, TETE NOYEE	2	2	2	2		
21	6CE–12411–00	THERMOSTAT THERMOSTAT	2	2	2	2		
22	67F–12412–00	.SEAL, THERMOSTAT .JOINT, THERMOSTAT	1	1	1	1		
23	6CE–12413–B0–9S	COVER, THERMOSTAT COUVERCLE, THERMOSTAT	1	1	1	1		
24	6CE–12413–A0–9S	COVER, THERMOSTAT COUVERCLE, THERMOSTAT	1	1	1	1		
25	6CB–12422–10–9S	COVER, HOUSING COUVERCLE DE CARTER DE POMPE	2	2	2	2		
26	6CB–12427–11	GASKET, HOUSING COVER 1 JOINT, COUVERCLE DE CARTER 1	2	2	2	2		
27	95027–06025	BOLT, FLANGE BOULON, A COLLERETTE	6	6	6	6		

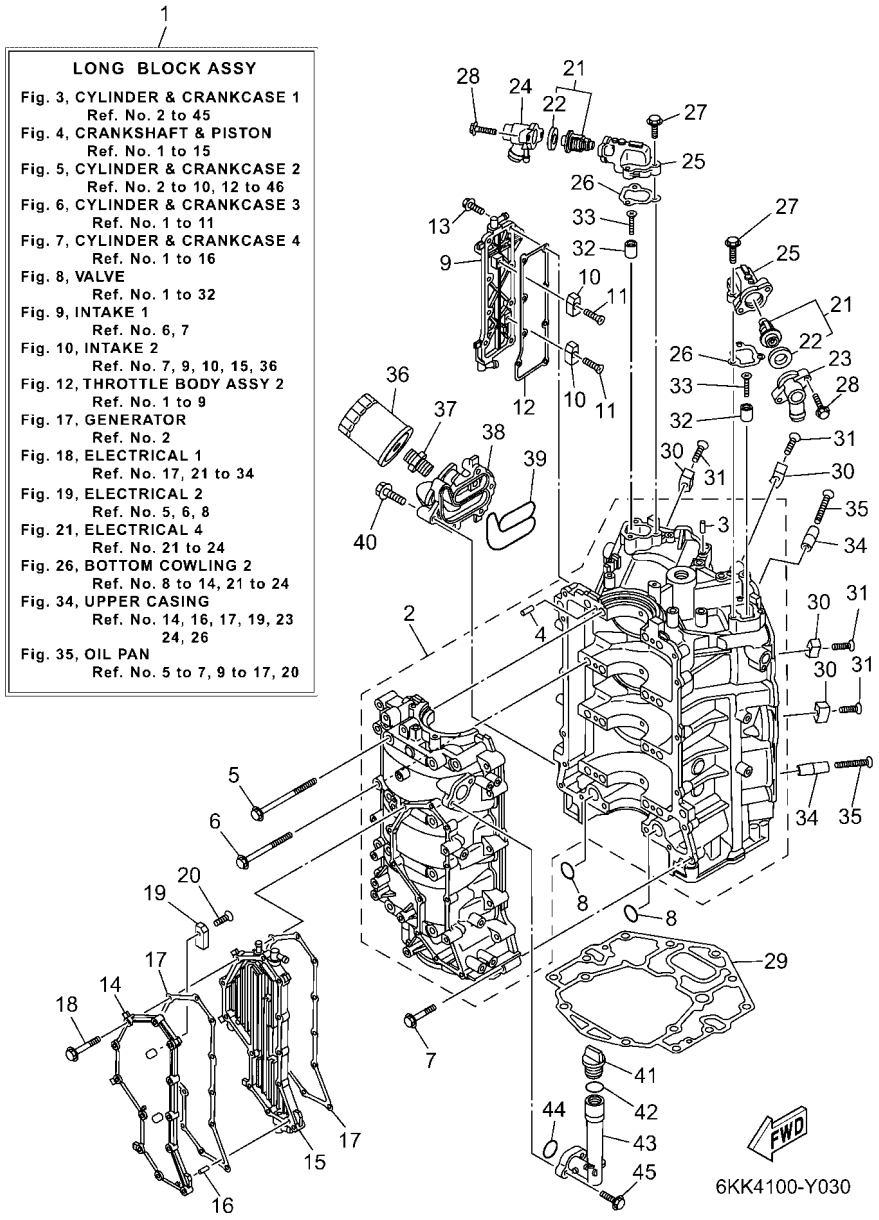

FIG. 3 CYLINDER & CRANKCASE 1 — CYLINDRE & CARTER 1

REF. NO.	PART NO. N° PIECES	DESCRIPTION DESCRIPTION	XCB	XCB2	NCB	NCB2		REMARKS REMARQUES
28	90105–06037	BOLT, FLANGE BOULON, A COLLERETTE	4	4	4	4		
29	6KA–11351–00	GASKET, CYLINDER JOINT, D'EMBASE	1	1	1	1		
30	6AW–1132P–00	ANODE 5 ANODE 5	4	4	4	4		
31	98780–06530	SCREW, FLAT HEAD VIS A TETE FRAISEE	4	4	4	4		
32	68T–11325–00	ANODE ANODE	2	2	2	2		
33	90151–05M05	SCREW, COUNTERSUNK VIS, TETE NOYEE	2	2	2	2		
34	6AW–1132N–01	ANODE 4 ANODE 4	2	2	2	2		
35	98780–06550	SCREW, FLAT HEAD VIS A TETE FRAISEE	2	2	2	2		
36	N26–13440–04	ELEMENT ASSY, OIL CLEANER ELEMENT, FILTRE A HUILE	1	1	1	1		
37	90401–19001	BOLT, UNION BOULON, RACCORD	1	1	1	1		
38	6CE–13446–10–9S	CONNECTOR CONNECTEUR	1	1	1	1		
39	6CB–13477–00	GASKET JOINT	1	1	1	1		
40	90105–06151	BOLT, FLANGE BOULON, A COLLERETTE	5	5	5	5		
41	6G8–15363–00	PLUG, OIL PLOT, HUILE	1	1	1	1		
42	93210–24M79	O-RING JOINT TORIQUE	1	1	1	1		
43	6CB–15319–00	JOINT JOINT	1	1	1	1		
44	93210–27370	O-RING JOINT TORIQUE	1	1	1	1		
45	90105–06037	BOLT, FLANGE BOULON, A COLLERETTE	2	2	2	2		

FIG. 4 CRANKSHAFT & PISTON — VILEBREQUIN & PISTON

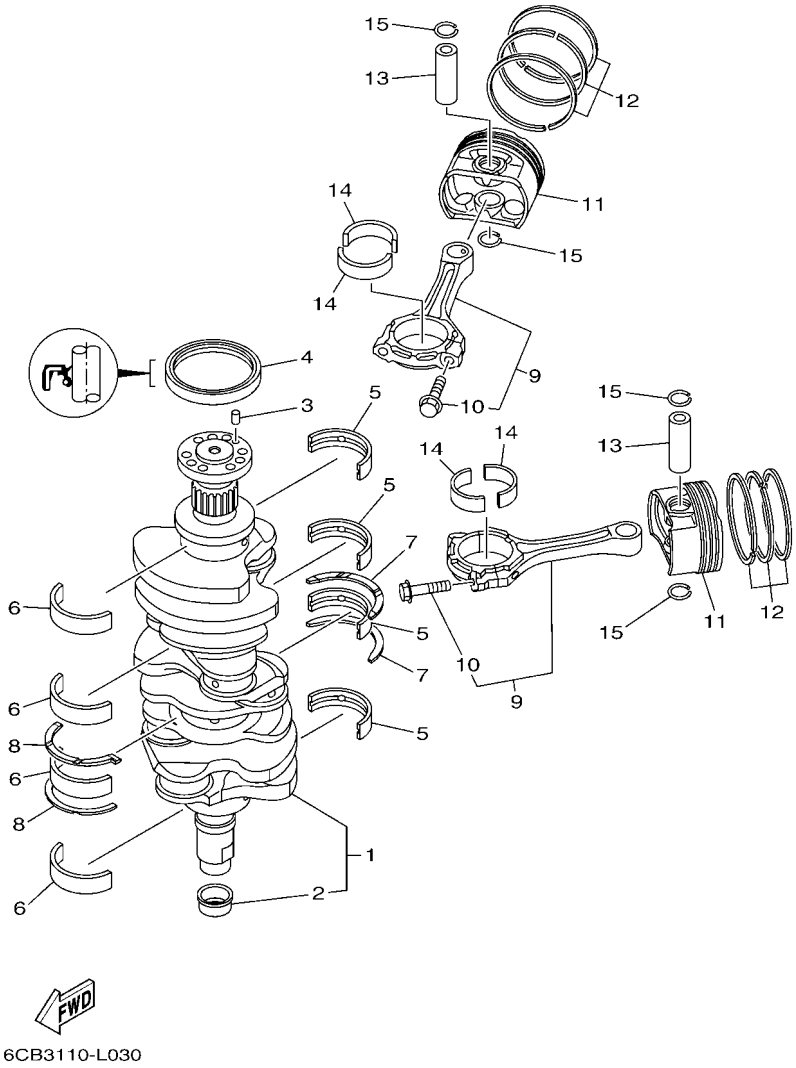

REF. NO.	PART NO. N° PIECES	DESCRIPTION DESCRIPTION	XCB	XCB2	NCB	NCB2		REMARKS REMARQUES
1	6CB–11410–00	CRANKSHAFT VILEBREQUIN COMPLET	1	1	1	1		
2	6CB–11478–00	.COLLAR .COLLERETTE	1	1	1	1		
3	93606–12019	PIN, DOWEL GOUPILLE	1	1	1	1		
4	93102–85008	OIL SEAL JOINT SPY	1	1	1	1		
5	6CB–11416–00	PLANE BEARING, CRANKSHAFT 1 COUSSINET DE VILEBREQUIN 1	4	4	4	4		UR PURPLE UR PURPLE
	6CB–11416–10	PLANE BEARING, CRANKSHAFT 1 COUSSINET DE VILEBREQUIN 1	4	4	4	4		UR YELLOW UR YELLOW
	6CB–11416–20	PLANE BEARING, CRANKSHAFT 1 COUSSINET DE VILEBREQUIN 1	4	4	4	4		UR RED UR RED
	6CB–11416–30	PLANE BEARING, CRANKSHAFT 1 COUSSINET DE VILEBREQUIN 1	4	4	4	4		UR GREEN UR GREEN
	6CB–11416–40	PLANE BEARING, CRANKSHAFT 1 COUSSINET DE VILEBREQUIN 1	4	4	4	4		UR BROWN UR BROWN
6	6CB–11417–00	PLANE BEARING, CRANKSHAFT 2 COUSSINET DE VILEBREQUIN 2	4	4	4	4		UR PURPLE UR PURPLE
	6CB–11417–10	PLANE BEARING, CRANKSHAFT 2 COUSSINET DE VILEBREQUIN 2	4	4	4	4		UR YELLOW UR YELLOW
	6CB–11417–20	PLANE BEARING, CRANKSHAFT 2 COUSSINET DE VILEBREQUIN 2	4	4	4	4		UR RED UR RED
	6CB–11417–30	PLANE BEARING, CRANKSHAFT 2 COUSSINET DE VILEBREQUIN 2	4	4	4	4		UR GREEN UR GREEN
	6CB–11417–40	PLANE BEARING, CRANKSHAFT 2 COUSSINET DE VILEBREQUIN 2	4	4	4	4		UR BROWN UR BROWN
7	6CB–11426–03	BEARING, THRUST 1 ROULEMENT DE BUTEE 1	2	2	2	2		
8	6CB–11427–03	BEARING, THRUST 2 ROULEMENT DE BUTEE 2	2	2	2	2		
9	6CB–W1165–10	CONNECTING ROD ASSY BIELLE COMPLETTE	6	6	6	6		
10	63P–11654–10	.BOLT, CONNECTING ROD .BOULON, BIELLE	2	2	2	2		
11	6CE–11631–02	PISTON (STD) PISTON (STD)	6	6	6	6		
12	6CB–11603–00	PISTON RING SET (STD) JEU DE SEGMENTS (STD)	6	6	6	6		
13	6CB–11633–00	PIN, PISTON AXE, PISTON	6	6	6	6		
14	6JD–11656–00	PLANE BEARING, CONNECTING ROD ROULEMENT DE BIELLE	12	12	12	12		UR BLACK UR BLACK
	6JD–11656–10	PLANE BEARING, CONNECTING ROD ROULEMENT DE BIELLE	12	12	12	12		UR PINK UR PINK
	6JD–11656–20	PLANE BEARING, CONNECTING ROD ROULEMENT DE BIELLE	12	12	12	12		UR RED UR RED
15	K0F–A3233–00	RING,HOLE SNAP JONC	12	12	12	12		

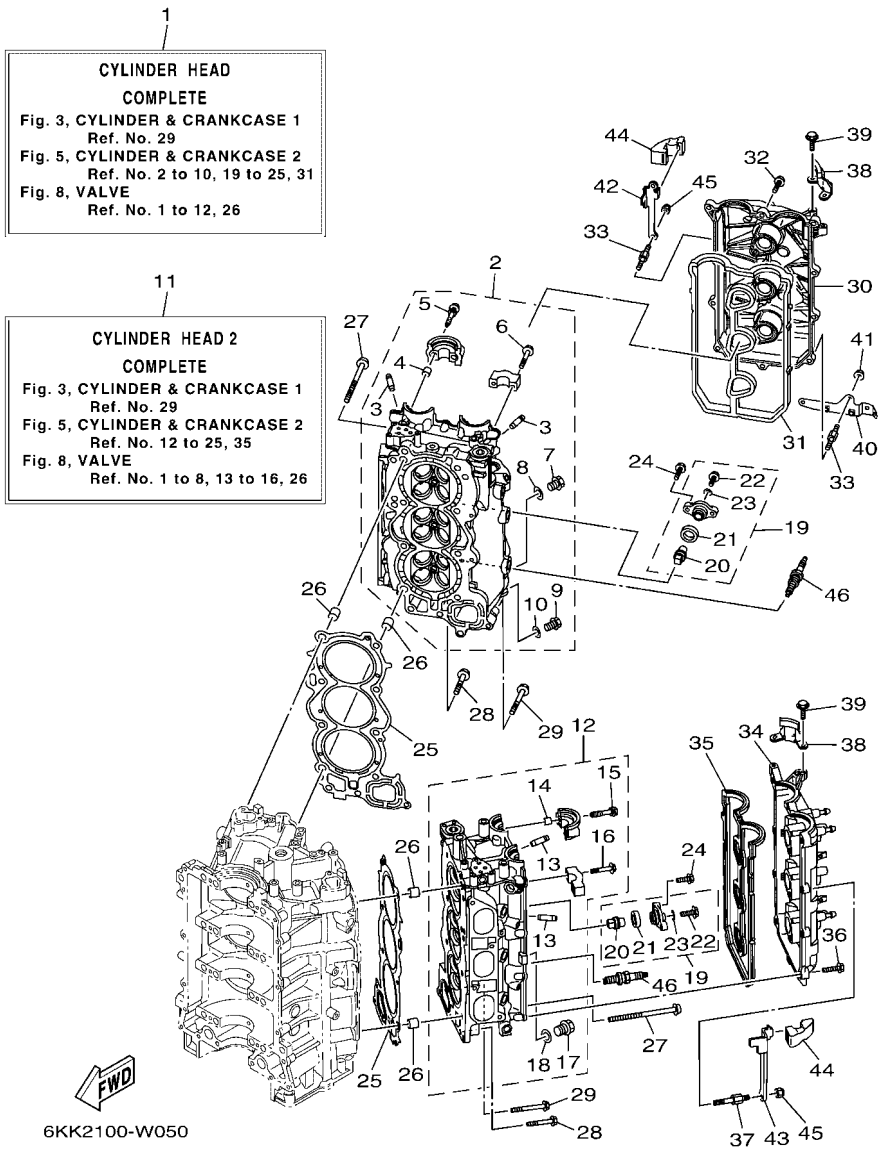

FIG. 5 CYLINDER & CRANKCASE 2 — CYLINDRE & CARTER 2

REF. NO.	PART NO. N° PIECES	DESCRIPTION DESCRIPTION	XCB	XCB2	NCB	NCB2		REMARKS REMARQUES
1	6KA–W009A–02–9S	CYLINDER HEAD COMPLETE CULASSE (ENS.)	1	1	1	1		
2	6CE–11110–12–9S	CYLINDER HEAD ASSY JEU DE CULASSE	1	1	1	1		
3	6S5–11133–10	.GUIDE, VALVE 1 .GUIDE, SOUPAPE 1	12	12	12	12		
4	91809–08006	.PIN, DOWEL .GOUJON, D'ASSEMBLAGE	4	4	4	4		
5	90119–07001	.BOLT, WITH WASHER .BOULON, AVEC RONDELLE	4	4	4	4		
6	90119–07234	.BOLT, WITH WASHER .BOULON, AVEC RONDELLE	12	12	12	12		
7	90340–18M09	.PLUG, STRAIGHT SCREW .PLOT, FILETE DROIT	1	1	1	1		
8	90201–186F1	.WASHER, PLATE .RONDELLE, PLATE	1	1	1	1		
9	90340–14M06	.PLUG, STRAIGHT SCREW .PLOT, FILETE DROIT	1	1	1	1		
10	90430–14115	.GASKET .JOINT	1	1	1	1		
11	6KA–W009C–02–9S	CYLINDER HEAD 2 COMPLETE CULASSE 2	1	1	1	1		
12	6CE–11120–12–9S	CYLINDER HEAD ASSY 2 CULASSE 2	1	1	1	1		
13	6S5–11133–10	.GUIDE, VALVE 1 .GUIDE, SOUPAPE 1	12	12	12	12		
14	91809–08006	.PIN, DOWEL .GOUJON, D'ASSEMBLAGE	4	4	4	4		
15	90119–07001	.BOLT, WITH WASHER .BOULON, AVEC RONDELLE	4	4	4	4		
16	90119–07234	.BOLT, WITH WASHER .BOULON, AVEC RONDELLE	12	12	12	12		
17	90340–18M09	.PLUG, STRAIGHT SCREW .PLOT, FILETE DROIT	1	1	1	1		
18	90201–186F1	.WASHER, PLATE .RONDELLE, PLATE	1	1	1	1		
19	6ML–11301–00	ANODE COVER ASSY COUVERCLE ANODE (ENS.)	8	8	8	8		
20	6ML–11325–00	.ANODE .ANODE	1	1	1	1		
21	67F–11328–01	.GROMMET, ANODE .PASSE-FIL	1	1	1	1		
22	90105–06M07	.BOLT, FLANGE .BOULON, A COLLERETTE	1	1	1	1		
23	90430–06M03	.GASKET .JOINT	1	1	1	1		
24	95D95–08025	BOLT, FLANGE DEEP RECESS BOULON FIXATION	16	16	16	16		
25	6CB–11181–00	GASKET, CYLINDER HEAD 1 JOINT, DE CULASSE 1	2	2	2	2		
26	90387–11005	COLLAR COLLERETTE	4	4	4	4		
27	90149–11001	SCREW VIS	16	16	16	16		

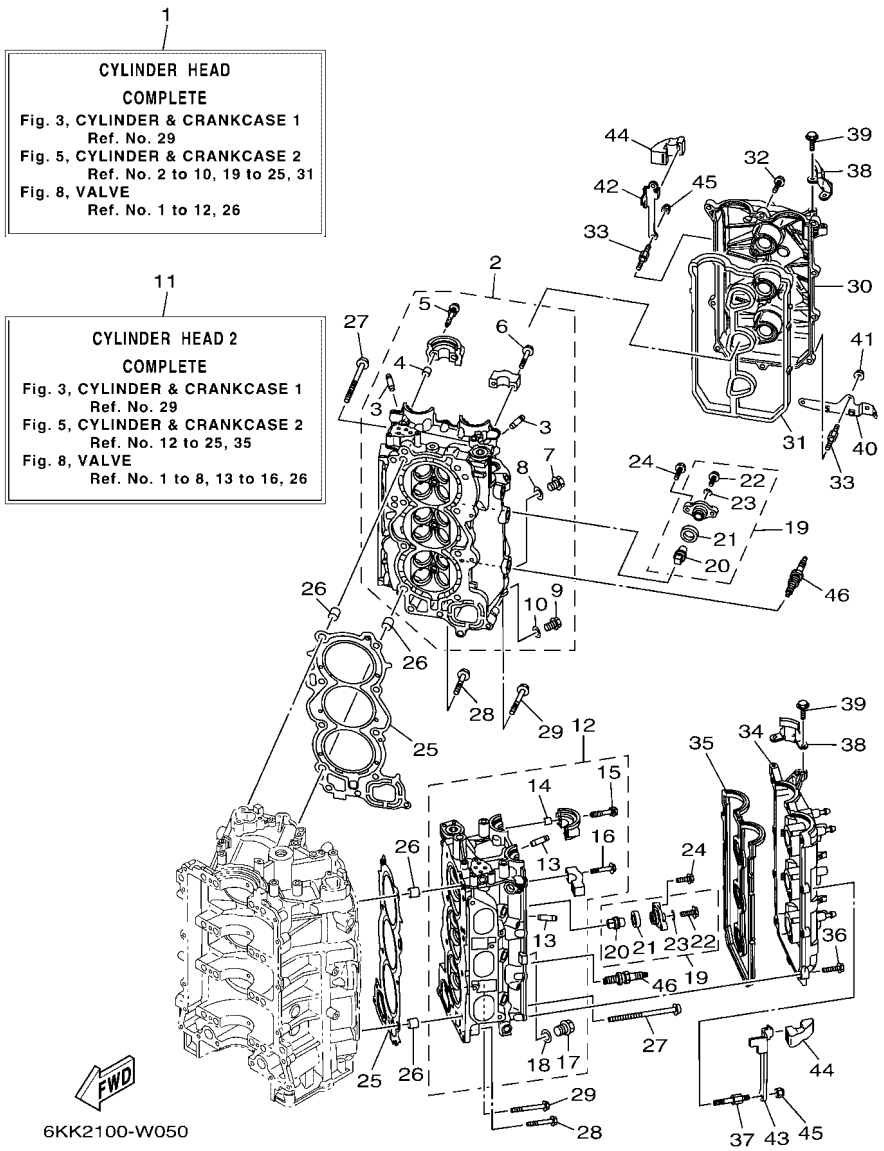

FIG. 5 CYLINDER & CRANKCASE 2 — CYLINDRE & CARTER 2

REF. NO.	PART NO. N° PIECES	DESCRIPTION DESCRIPTION	XCB	XCB2	NCB	NCB2		REMARKS REMARQUES
28	90105–08175	BOLT, FLANGE BOULON, A COLLERETTE	4	4	4	4		
29	90105–08220	BOLT, FLANGE BOULON, A COLLERETTE	2	2	2	2		
30	6CB–11191–02	COVER, CYLINDER HEAD 1 COUVERCLE, CULASSE 1	1	1	1	1		
31	6CB–11193–00	GASKET, HEAD COVER 1 JOINT, COUVERCLE DE CULASSE 1	1	1	1	1		
32	95D95–06030	BOLT, FLANGE DEEP RECESS BOULON FIXATION	9	9	9	9		
33	90109–06277	BOLT BOULON	4	4	4	4		
34	6CB–11192–02	COVER, CYLINDER HEAD 2 COUVERCLE, CULASSE 2	1	1	1	1		
35	6CB–11194–00	GASKET, HEAD COVER 2 JOINT, COUVERCLE DE CULASSE 2	1	1	1	1		
36	95D95–06030	BOLT, FLANGE DEEP RECESS BOULON FIXATION	11	11	11	11		
37	90109–06277	BOLT BOULON	2	2	2	2		
38	6AW–15142–00	GUIDE 1 GUIDE 1	2	2	2	2		
39	95D95–06014	BOLT, FLANGE DEEP RECESS BOULON FIXATION	4	4	4	4		
40	6KA–2134V–00	BRACKET SUPPORT	1	1	1	1		
41	90179–06M28	NUT ECROU	2	2	2	2		
42	6KW–11998–00	BRACKET 1 SUPPORT 1	1	1	1	1		
43	6KW–11999–00	BRACKET 2 SUPPORT 2	1	1	1	1		
44	6KW–42662–00	DAMPER AMORTISSEUR	2	2	2	2		
45	90185–06M07	NUT, SELF-LOCKING ECROU,AUTO-BLOQUANT	4	4	4	4		
46	94702–00400	PLUG, SPARK (NGK LFR6A-11) BOUGIE D'ALLUMAGE(NGK LFR6A-11	6	6	6	6		

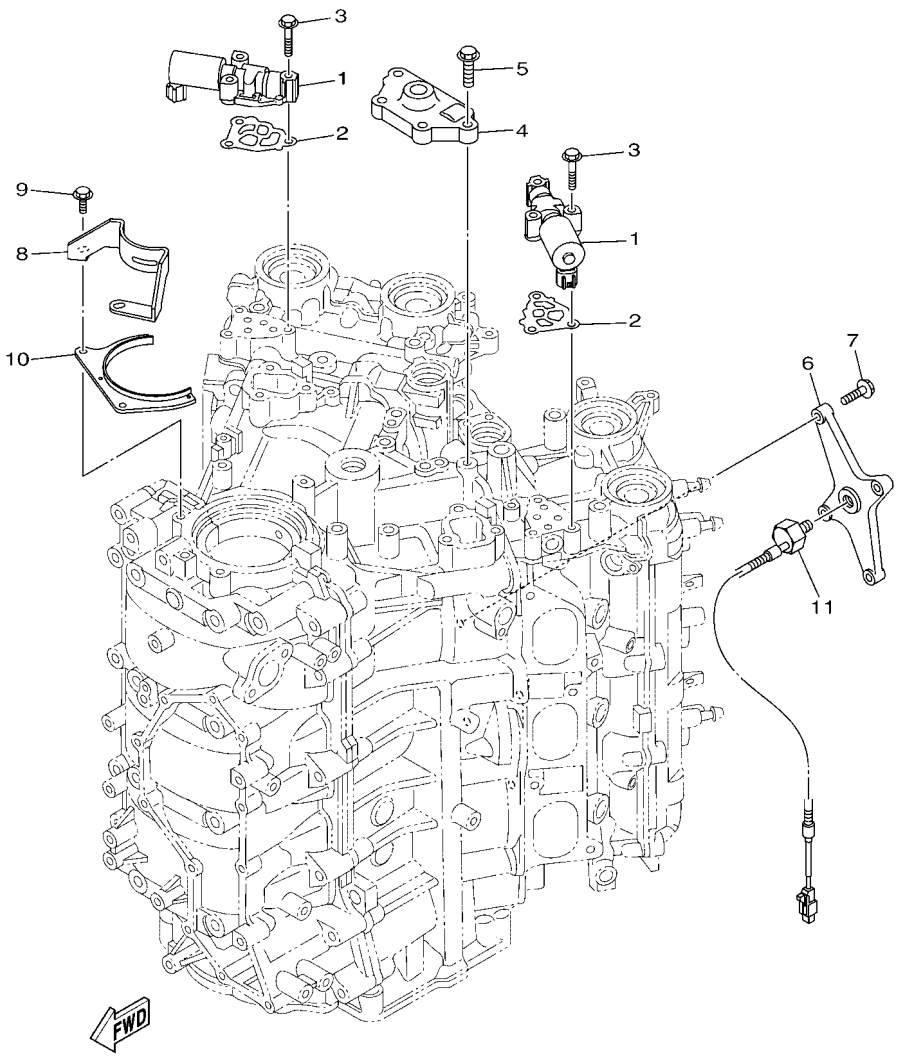

6CD6100-N060

FIG. 6 CYLINDER & CRANKCASE 3 — CYLINDRE & CARTER 3

REF. NO.	PART NO. N° PIECES	DESCRIPTION DESCRIPTION	XCB	XCB2	NCB	NCB2		REMARKS REMARQUES
1	6CB–86120–00	SOLENOID VALVE ASSY SOLENOIDE	2	2	2	2		
2	6CB–1242F–00	GASKET, FILTER JOINT, FILTRE	2	2	2	2		
3	90105–06035	BOLT, FLANGE BOULON, A COLLERETTE	6	6	6	6		
4	6CB–15544–00	STAY 1 SUPPORT 1	1	1	1	1		
5	90105–08178	BOLT, FLANGE BOULON, A COLLERETTE	4	4	4	4		
6	6CB–1135A–00	BRACKET SUPPORT	1	1	1	1		
7	90105–06037	BOLT, FLANGE BOULON, A COLLERETTE	4	4	4	4		
8	6CB–15142–00	GUIDE 1 GUIDE 1	1	1	1	1		
9	95D95–06016	BOLT, FLANGE DEEP RECESS BOULON FIXATION	2	2	2	2		
10	6CB–1149A–00	PLATE 1 FLAQUE 1	1	1	1	1		
11	6P2–85780–01	SENSOR, KNOCK SONDE DE COGNEMENT	1	1	1	1		

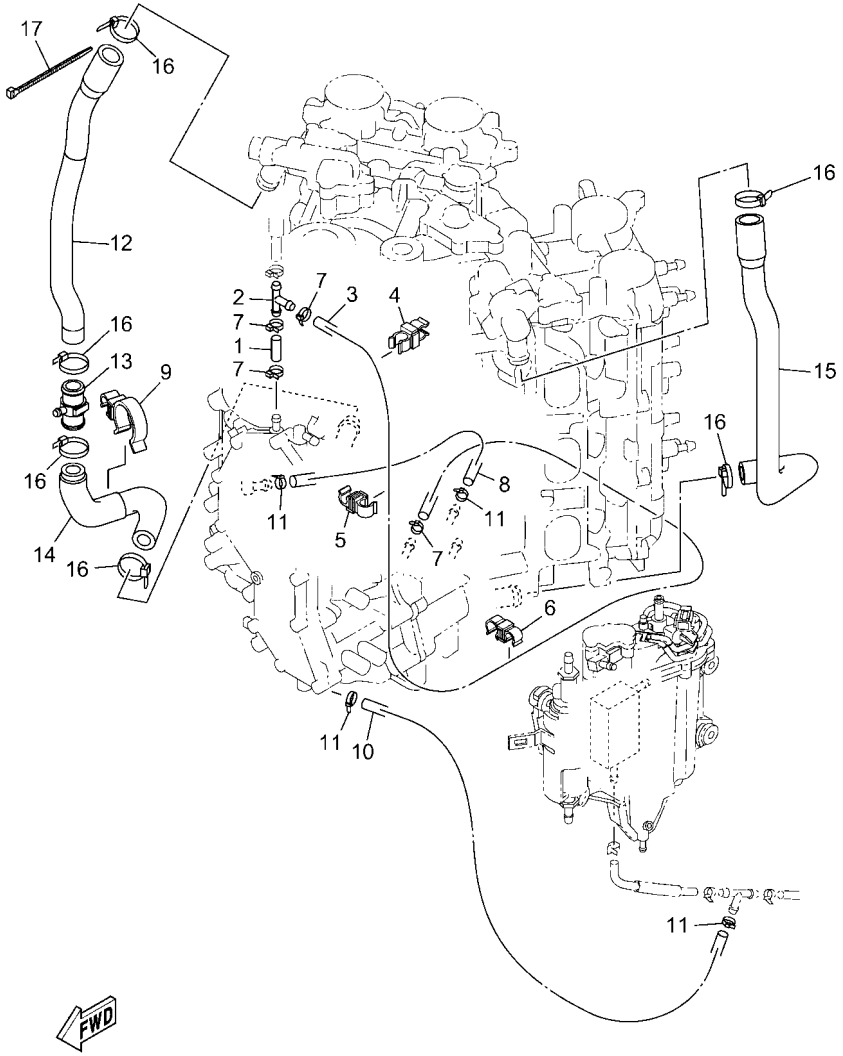

6CLF010-Y070

FIG. 7 CYLINDER & CRANKCASE 4 — CYLINDRE & CARTER 4

REF. NO.	PART NO. N° PIECES	DESCRIPTION DESCRIPTION	XCB	XCB2	NCB	NCB2		REMARKS REMARQUES
1	90445–09220	HOSE (L30) DURITE (L30)	1	1	1	1		
2	688–24378–00	PIPE, JOINT 3 DURITE RACCORDEMENT 3	1	1	1	1		
3	6KA–12576–00	HOSE 1 TUYAU 1	1	1	1	1		
4	90464–10M59	CLAMP BRIDE	1	1	1	1		
5	90464–09013	CLAMP BRIDE	1	1	1	1		
6	90464–12010	CLAMP BRIDE	1	1	1	1		
7	90465–11M10	CLAMP BRIDE	4	4	4	4		
8	6CB–12577–00	HOSE 2 TUYAU 2	1	1	1	1		
9	90464–26002	CLAMP BRIDE	1	1	1	1		
10	90445–096H2	HOSE (L280) DURITE (L280)	1	1	1	1		
11	90465–11M10	CLAMP BRIDE	4	4	4	4		
12	6ML–1244G–00	HOSE, 4 DURITE 4	1	1	1	1		
13	6CE–24378–00	PIPE, JOINT 3 DURITE RACCORDEMENT 3	1	1	1	1		
14	6CE–1244H–00	HOSE 5 DURITE 5	1	1	1	1		
15	6CB–1243E–00	HOSE 2 DURITE 2	1	1	1	1		
16	90465–11M59	CLAMP BRIDE	6	6	6	6		
17	90465–14M66	CLAMP BRIDE	1	1	1	1		

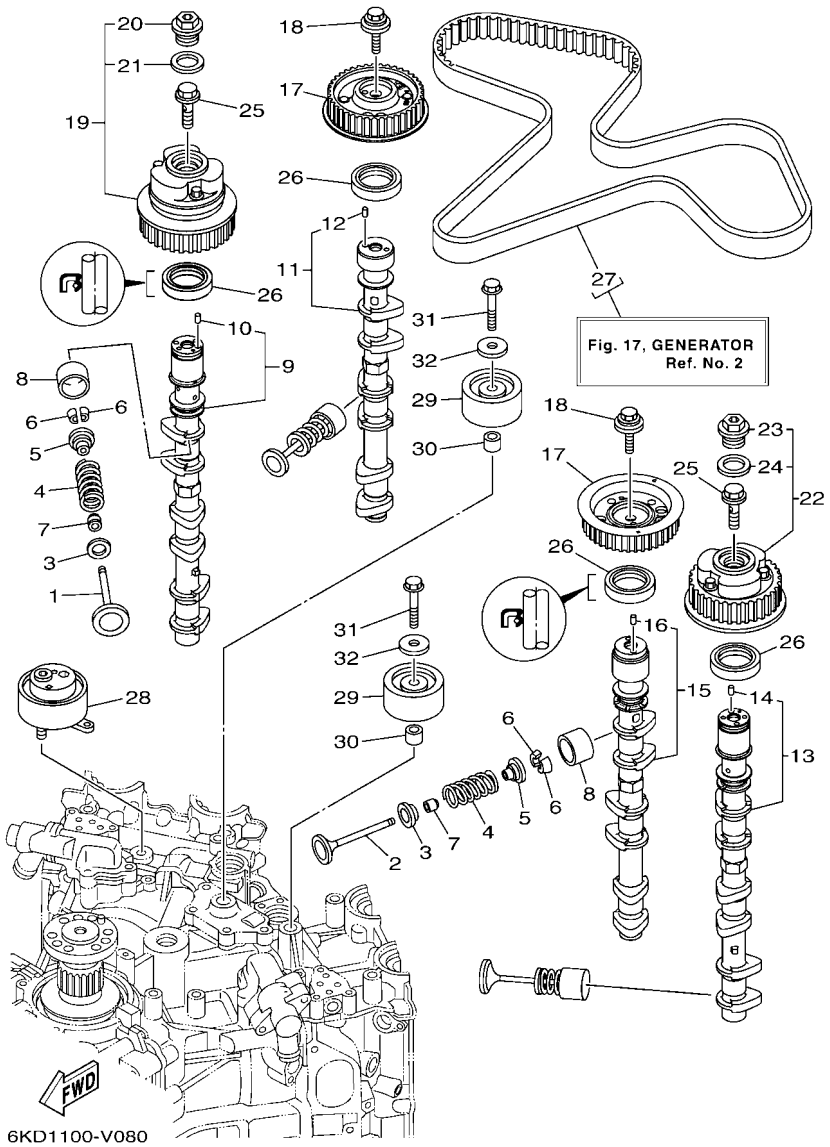

FIG. 8 VALVE SOUPAPE

REF. NO.	PART NO. N° PIECES	DESCRIPTION DESCRIPTION	XCB	XCB2	NCB	NCB2		REMARKS REMARQUES
1	6CB–12111–00	VALVE, INTAKE SOUPAPE, ADMISSION	12	12	12	12		
2	6DA–12121–00	VALVE, EXHAUST SOUPAPE, ECHAPPEMENT	12	12	12	12		
3	K0F–A3743–00	SEAT, VALVE SPRING SIEGE, RESSORT DE SOUPAPE	24	24	24	24		
4	6CB–12113–00	SPRING, VALVE INNER RESSORT DE SOUPAPE, INTERNE	24	24	24	24		
5	K0F–A3741–00	RETAINER, VALVE SPRING BUTEE DE RESSORT DE SOUPAPA	24	24	24	24		
6	K0F–A3742–00	LOCK, VALVE SPRING RETAINER FRAISE, SOUPAPE	48	48	48	48		
7	51Y–12119–00	SEAL, VALVE STEM JOINT, QUEUE DE SOUPAPE	24	24	24	24		
8	K0F–A3751–00	LIFTER, VALVE (3.000) LEVE-SOUPAPE (3.000)	24	24	24	24		UR UR
	K0F–A3751–10	LIFTER, VALVE (3.025) LEVE-SOUPAPE (3.025)	24	24	24	24		UR UR
	K0F–A3751–20	LIFTER, VALVE (3.050) LEVE-SOUPAPE (3.050)	24	24	24	24		UR UR
	K0F–A3751–30	LIFTER, VALVE (3.075) LEVE-SOUPAPE (3.075)	24	24	24	24		UR UR
	K0F–A3751–40	LIFTER, VALVE (3.100) LEVE-SOUPAPE (3.100)	24	24	24	24		UR UR
	K0F–A3751–50	LIFTER, VALVE (3.122) LEVE-SOUPAPE (3.122)	24	24	24	24		UR UR
	K0F–A3751–60	LIFTER, VALVE (3.142) LEVE-SOUPAPE (3.142)	24	24	24	24		UR UR
	K0F–A3751–70	LIFTER, VALVE (3.162) LEVE-SOUPAPE (3.162)	24	24	24	24		UR UR
	K0F–A3751–80	LIFTER, VALVE (3.182) LEVE-SOUPAPE (3.182)	24	24	24	24		UR UR
	K0F–A3751–90	LIFTER, VALVE (3.202) LEVE-SOUPAPE (3.202)	24	24	24	24		UR UR
	K0F–A3751–A0	LIFTER, VALVE (3.222) LEVE-SOUPAPE (3.222)	24	24	24	24		UR UR
	K0F–A3751–B0	LIFTER, VALVE (3.242) LEVE-SOUPAPE (3.242)	24	24	24	24		UR UR
	K0F–A3751–C0	LIFTER, VALVE (3.262) LEVE-SOUPAPE (3.262)	24	24	24	24		UR UR
	K0F–A3751–D0	LIFTER, VALVE (3.282) LEVE-SOUPAPE (3.282)	24	24	24	24		UR UR
	K0F–A3751–E0	LIFTER, VALVE (3.302) LEVE-SOUPAPE (3.302)	24	24	24	24		UR UR
	K0F–A3751–F0	LIFTER, VALVE (3.322) LEVE-SOUPAPE (3.322)	24	24	24	24		UR UR
	K0F–A3751–G0	LIFTER, VALVE (3.342) LEVE-SOUPAPE (3.342)	24	24	24	24		UR UR
	K0F–A3751–H0	LIFTER, VALVE (3.362) LEVE-SOUPAPE (3.362)	24	24	24	24		UR UR
	K0F–A3751–J0	LIFTER, VALVE (3.382) LEVE-SOUPAPE (3.382)	24	24	24	24		UR UR
	K0F–A3751–K0	LIFTER, VALVE (3.402) LEVE-SOUPAPE (3.402)	24	24	24	24		UR UR

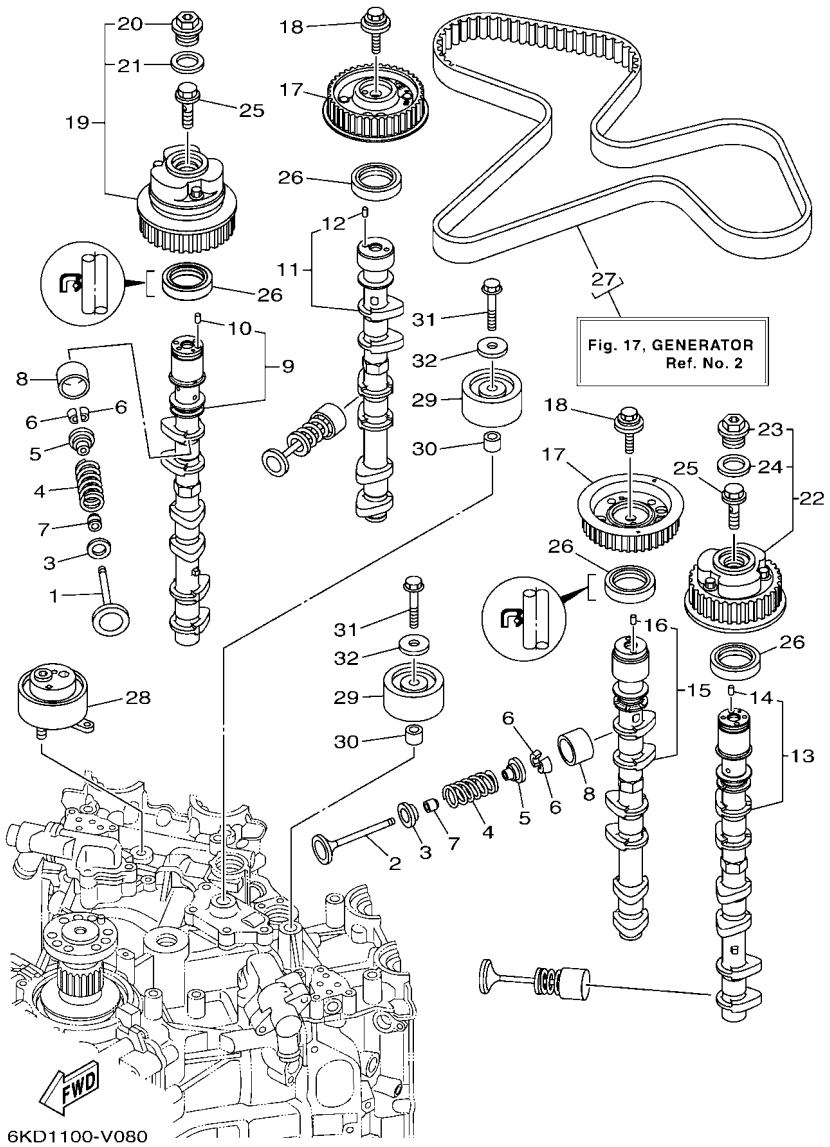

FIG. 8 VALVE SOUPAPE

REF. NO.	PART NO. N° PIECES	DESCRIPTION DESCRIPTION	XCB	XCB2	NCB	NCB2		REMARKS REMARQUES
8	K0F–A3751–L0	LIFTER, VALVE (3.422) LEVE-SOUPAPE (3.422)	24	24	24	24		UR UR
	K0F–A3751–M0	LIFTER, VALVE (3.442) LEVE-SOUPAPE (3.442)	24	24	24	24		UR UR
	K0F–A3751–N0	LIFTER, VALVE (3.462) LEVE-SOUPAPE (3.462)	24	24	24	24		UR UR
	K0F–A3751–P0	LIFTER, VALVE (3.482) LEVE-SOUPAPE (3.482)	24	24	24	24		UR UR
	K0F–A3751–R0	LIFTER, VALVE (3.502) LEVE-SOUPAPE (3.502)	24	24	24	24		UR UR
	K0F–A3751–S0	LIFTER, VALVE (3.522) LEVE-SOUPAPE (3.522)	24	24	24	24		UR UR
	K0F–A3751–T0	LIFTER, VALVE (3.542) LEVE-SOUPAPE (3.542)	24	24	24	24		UR UR
	K0F–A3753–00	LIFTER, VALVE (3.562) LEVE-SOUPAPE (3.562)	24	24	24	24		UR UR
	K0F–A3753–10	LIFTER, VALVE (3.582) LEVE-SOUPAPE (3.582)	24	24	24	24		UR UR
	K0F–A3753–20	LIFTER, VALVE (3.602) LEVE-SOUPAPE (3.602)	24	24	24	24		UR UR
	K0F–A3753–30	LIFTER, VALVE (3.625) LEVE-SOUPAPE (3.625)	24	24	24	24		UR UR
	K0F–A3753–40	LIFTER, VALVE (3.650) LEVE-SOUPAPE (3.650)	24	24	24	24		UR UR
	K0F–A3753–50	LIFTER, VALVE (3.675) LEVE-SOUPAPE (3.675)	24	24	24	24		UR UR
	K0F–A3753–60	LIFTER, VALVE (3.700) LEVE-SOUPAPE (3.700)	24	24	24	24		UR UR
	K0F–A3753–70	LIFTER, VALVE (3.725) LEVE-SOUPAPE (3.725)	24	24	24	24		UR UR
9	6KA–12171–01	CAMSHAFT 1 ARBRE A CAMES 1	1	1	1	1		
10	93605–10108	.PIN, DOWEL .AXE	1	1	1	1		
11	6KA–12181–00	CAMSHAFT 2 ARBRE A CAMES 2	1	1	1	1		
12	93605–10108	.PIN, DOWEL .AXE	1	1	1	1		
13	6KA–12172–01	CAMSHAFT 3 ARBRE A CAMES 3	1	1	1	1		
14	93605–10108	.PIN, DOWEL .AXE	1	1	1	1		
15	6KA–12182–00	CAMSHAFT 4 ARBRE A CAMES 4	1	1	1	1		
16	93605–10108	.PIN, DOWEL .AXE	1	1	1	1		
17	6KA–11567–00	GEAR, DRIVEN 2 PIGNON SECONDAIRE 2	2	2	2	2		
18	90119–10050	BOLT, WITH WASHER BOULON, AVEC RONDELLE	2	2	2	2		
19	6CB–12645–01	PULLEY ASSY 1 POULIE COMPLET 1	1	1	1	1		
20	6P2–12623–00	.BOLT .BOULON	1	1	1	1		

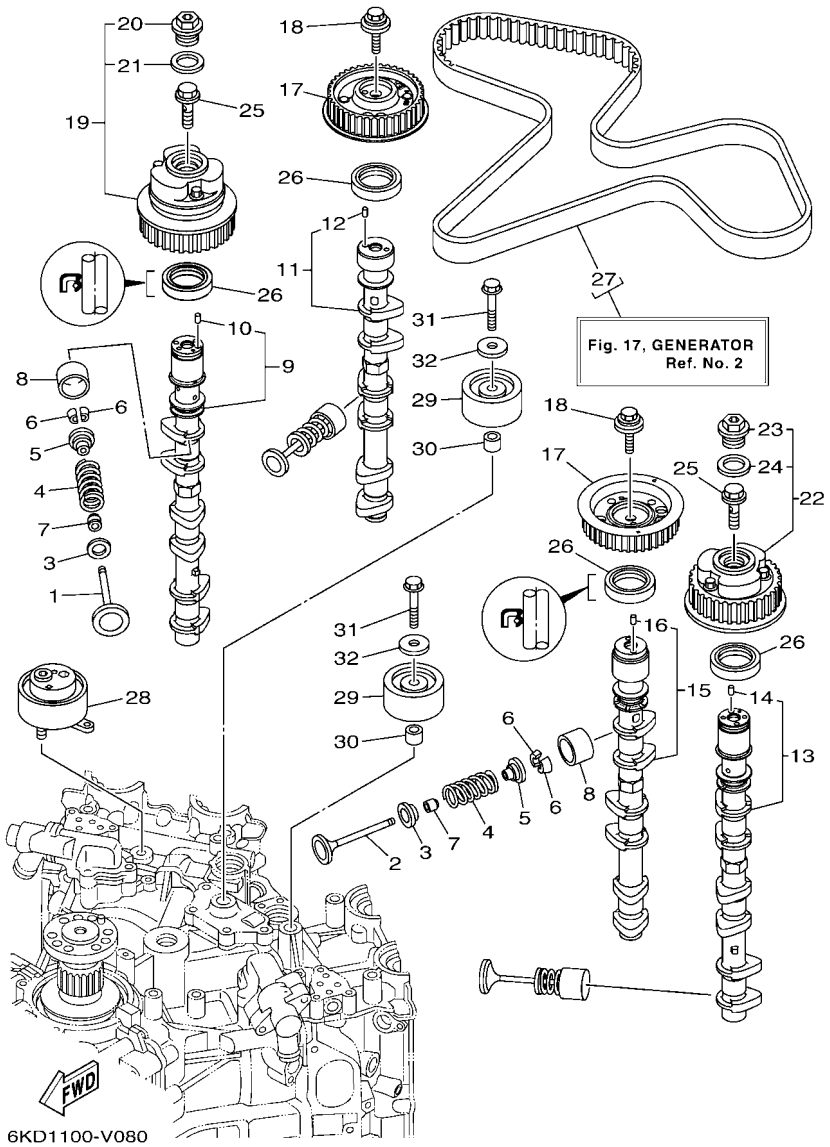

FIG. 8 VALVE SOUPAPE

REF. NO.	PART NO. N° PIECES	DESCRIPTION DESCRIPTION	XCB	XCB2	NCB	NCB2		REMARKS REMARQUES
21	6P2–12663–00	.GASKET .JOINT	1	1	1	1		
22	6CB–1264A–01	PULLEY ASSY 2 POULIE COMPLET 2	1	1	1	1		
23	6P2–12623–00	.BOLT .BOULON	1	1	1	1		
24	6P2–12663–00	.GASKET .JOINT	1	1	1	1		
25	6P2–12615–00	BOLT BOULON	2	2	2	2		
26	93102–38008	OIL SEAL JOINT SPY	4	4	4	4		
27	6CB–W4624–00	BELT (WITH ROTOR BOLTS) COURROIE (AVEC BOULON)	1	1	1	1		
28	6CB–11590–06	TENSIONER ASSY TENDEUR (ENS.)	1	1	1	1		
29	6CB–15512–00	GEAR, IDLER 1 PIGNON, INTERMEDIAIRE 1	2	2	2	2		
30	99530–14016	PIN, DOWEL GOUJON, D'ASSEMBLAGE	2	2	2	2		
31	90119–10M07	BOLT, WITH WASHER BOULON, AVEC RONDELLE	2	2	2	2		
32	90201–10M01	WASHER, PLATE RONDELLE, PLATE	2	2	2	2		

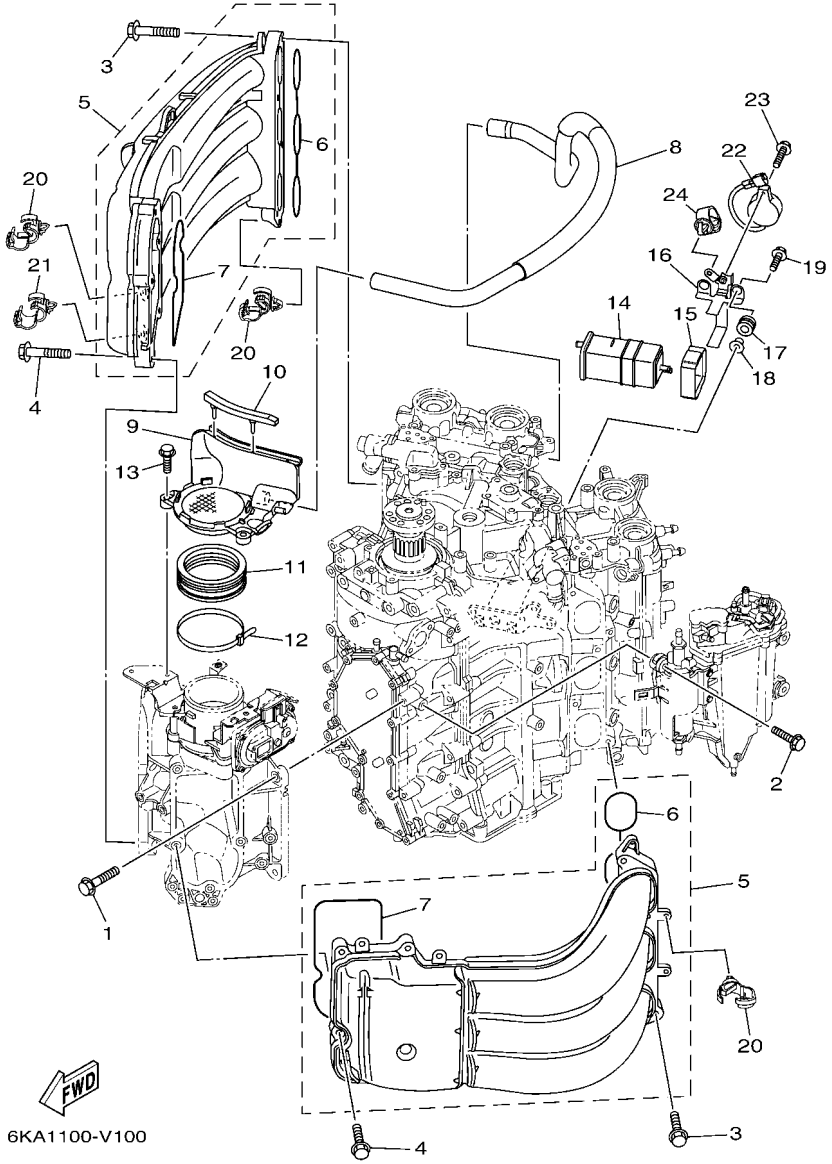

FIG. 9 INTAKE 1 — ADMISSION 1

REF. NO.	PART NO. N° PIECES	DESCRIPTION DESCRIPTION	XCB	XCB2	NCB	NCB2		REMARKS REMARQUES
1	95D75–08030	BOLT, FLANGE DEEP RECESS BOULON FIXATION	4	4	4	4		
2	90119–06299	BOLT, WITH WASHER BOULON, AVEC RONDELLE	4	4	4	4		
3	90119–08020	BOLT, WITH WASHER BOULON, AVEC RONDELLE	8	8	8	8		
4	90105–06035	BOLT, FLANGE BOULON, A COLLERETTE	10	10	10	10		
5	6CE–13641–00	MANIFOLD, INTAKE 1 TUBULURE, ADMISSION 1	2	2	2	2		
6	6CB–13645–00	.GASKET, MANIFOLD 1 .JOINT, TUBULURE 1	1	1	1	1		
7	6CB–13646–00	.GASKET, MANIFOLD 2 .JOINT, TUBULURE 2	1	1	1	1		
8	6CB–15373–01	PIPE, BREATHER DURITE DE RENIFLARD	1	1	1	1		
9	6CB–14440–01	SILENCER ASSY, INTAKE SIENCIEUX D'ADMISSION	1	1	1	1		
10	6CB–85547–00	DAMPER AMORTISSEUR	1	1	1	1		
11	6AW–1441J–01	PIPE, SILENCER DURITE, DE SILENCIEUX	1	1	1	1		
12	90464–99004	CLAMP BRIDE	1	1	1	1		
13	95D95–06025	BOLT, FLANGE DEEP RECESS BOULON FIXATION	2	2	2	2		
14	69J–24170–00	CANISTER ASSY BANDE, RASERVOIR A ESSENCE	1	1	1	1		
15	6FP–2419E–01	COVER, CANISTER COUVERCLE	1	1	1	1		
16	6KA–2134X–00	BRACKET, CANISTER SUPPORT	1	1	1	1		
17	90480–10M23	GROMMET PASSE-FIL	2	2	2	2		
18	90387–06289	COLLAR COLLERETTE	2	2	2	2		
19	90119–06309	BOLT, WITH WASHER BOULON, AVEC RONDELLE	2	2	2	2		
20	90464–13249	CLAMP BRIDE	8	8	8	8		
21	90464–20181	CLAMP BRIDE	1	1	1	1		
22	6KA–83383–01	BUZZER RONFLEUR	1	1	1	1		
23	90119–05M04	BOLT, WITH WASHER BOULON, AVEC RONDELLE	1	1	1	1		
24	90464–13249	CLAMP BRIDE	1	1	1	1		

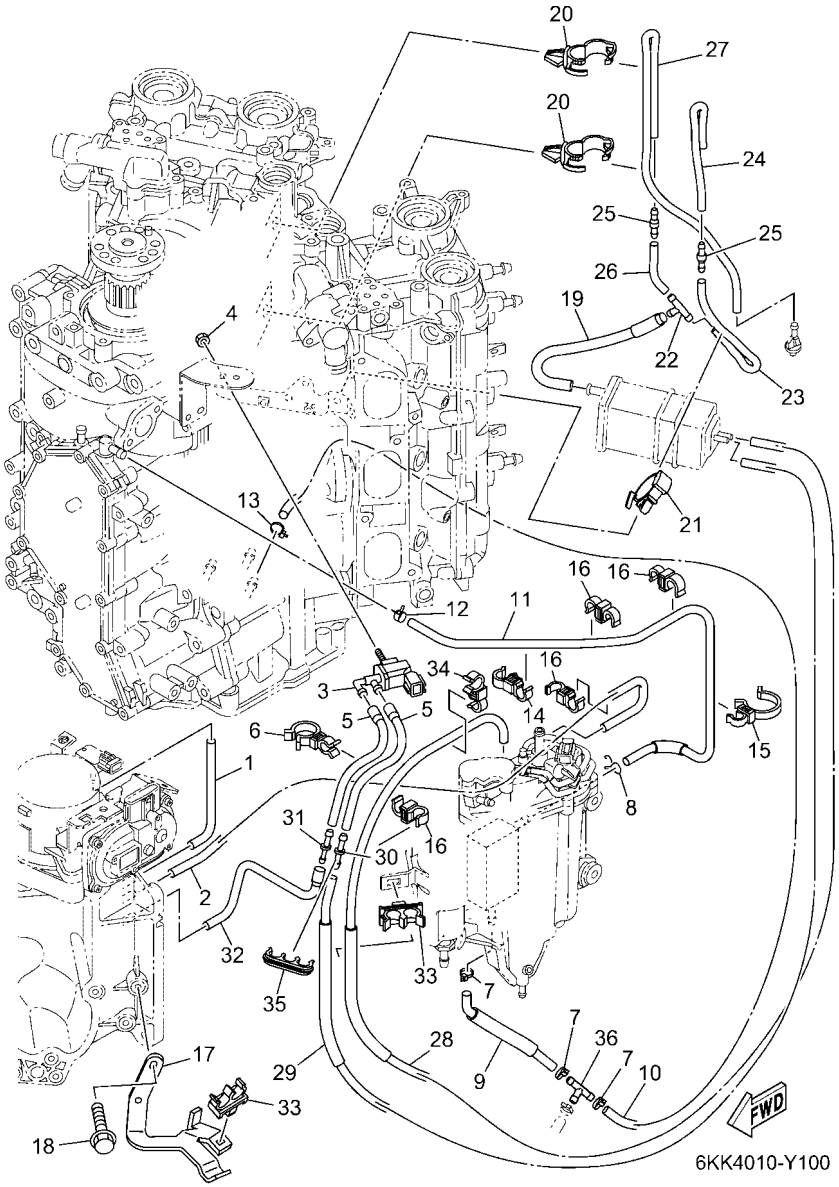

FIG. 10 INTAKE 2 — ADMISSION 2

REF. NO.	PART NO. N° PIECES	DESCRIPTION DESCRIPTION	XCB	XCB2	NCB	NCB2		REMARKS REMARQUES
1	6CB–13533–00	HOSE, VACUUM SENSING 4 DURITE 4	1	1	1	1		
2	6CB–13532–10	HOSE, VACUUM SENSING 3 DURITE 3	1	1	1	1		
3	6C5–86120–00	SOLENOID VALVE ASSY SOLENOIDE	1	1	1	1		
4	95380–06600	NUT, HEXAGON ECROU	1	1	1	1		
5	6CB–2416A–00	HOSE DURITE	2	2	2	2		
6	90464–23001	CLAMP BRIDE	2	2	2	2		
7	90465–11M10	CLAMP BRIDE	3	3	3	3		
8	90467–09M09	CLIP JONC	1	1	1	1		
9	6CE–12482–10	PIPE 2 DURITE 2	1	1	1	1		
10	90445–09120	HOSE (L600) DURITE (L600)	1	1	1	1		
11	6CB–12484–10	PIPE 4 DURITE 4	1	1	1	1		
12	90467–090A0	CLIP JONC	1	1	1	1		
13	90465–11M10	CLAMP BRIDE	1	1	1	1		
14	90464–12010	CLAMP BRIDE	1	1	1	1		
15	90464–26002	CLAMP BRIDE	1	1	1	1		
16	90464–09013	CLAMP BRIDE	4	4	4	4		
17	6CB–13782–00	STAY SUPPORT	1	1	1	1		
18	95D95–06016	BOLT, FLANGE DEEP RECESS BOULON FIXATION	2	2	2	2		
19	6CB–13545–00	HOSE 1 DURITE 1	1	1	1	1		
20	90464–20181	CLAMP BRIDE	2	2	2	2		
21	90464–07209	CLAMP BRIDE	1	1	1	1		
22	688–24378–00	PIPE, JOINT 3 DURITE RACCORDEMENT 3	1	1	1	1		
23	6CB–13546–01	HOSE 2 DURITE 2	1	1	1	1		
24	6CB–13547–00	HOSE 3 DURITE 3	1	1	1	1		
25	6E5–21744–00	BREATHER RENIFLARD	2	2	2	2		
26	6CB–13548–00	HOSE, AIR 4 DURITE, A AIR 4	1	1	1	1		
27	6KA–12483–00	PIPE 3 DURITE 3	1	1	1	1		

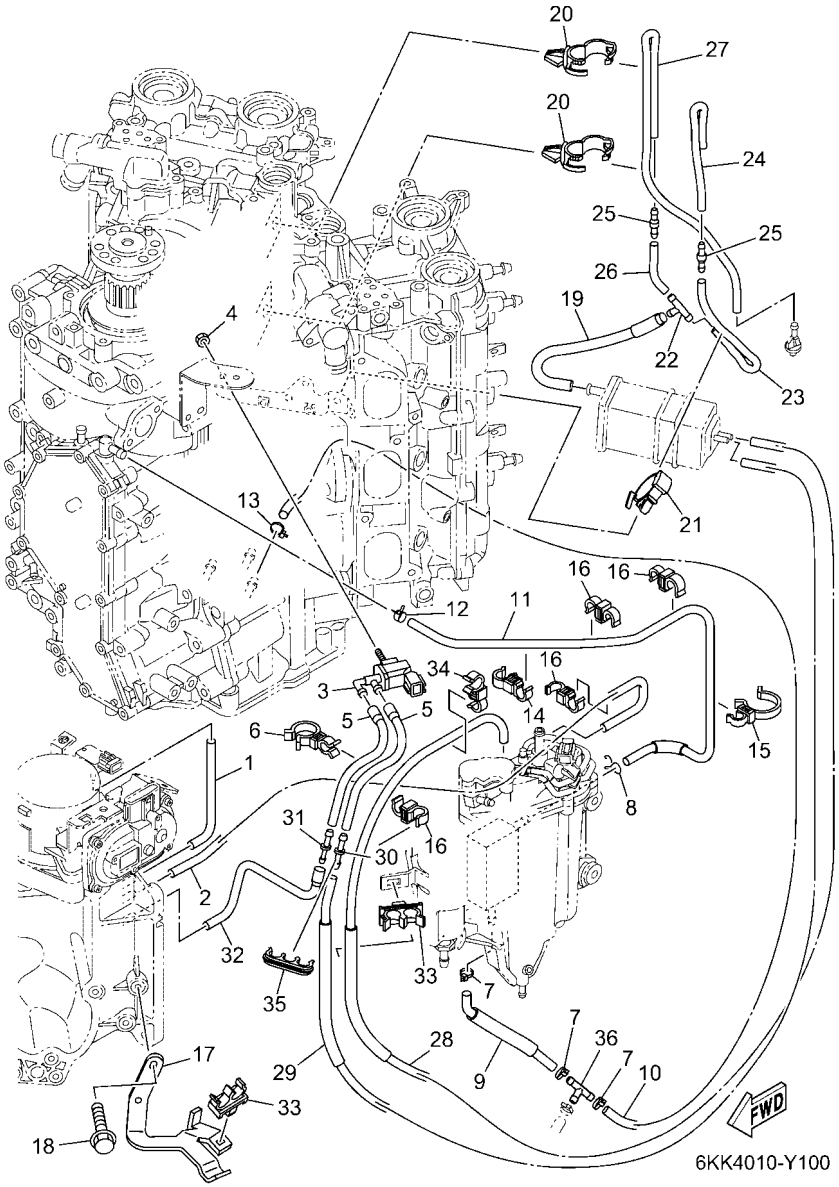

FIG. 10 INTAKE 2 — ADMISSION 2

REF. NO.	PART NO. N° PIECES	DESCRIPTION DESCRIPTION	XCB	XCB2	NCB	NCB2		REMARKS REMARQUES
28	6KA–1475A–00	PIPE 1 DURITE 1	1	1	1	1		
29	6KA–1475F–00	PIPE 3 DURITE 3	1	1	1	1		
30	6G8–24376–00	PIPE, JOINT 1 DURITE 1, RACCORDEMENT	1	1	1	1		
31	6EK–14989–00	ORIFICE, AIR VENT OR1F1CE	1	1	1	1		
32	6CB–1475G–10	PIPE 4 DURITE 4	1	1	1	1		
33	90464–11012	CLAMP BRIDE	2	2	2	2		
34	90464–12010	CLAMP BRIDE	1	1	1	1		
35	90464–10011	CLAMP BRIDE	1	1	1	1		
36	688–24378–00	PIPE, JOINT 3 DURITE RACCORDEMENT 3	1	1	1	1		

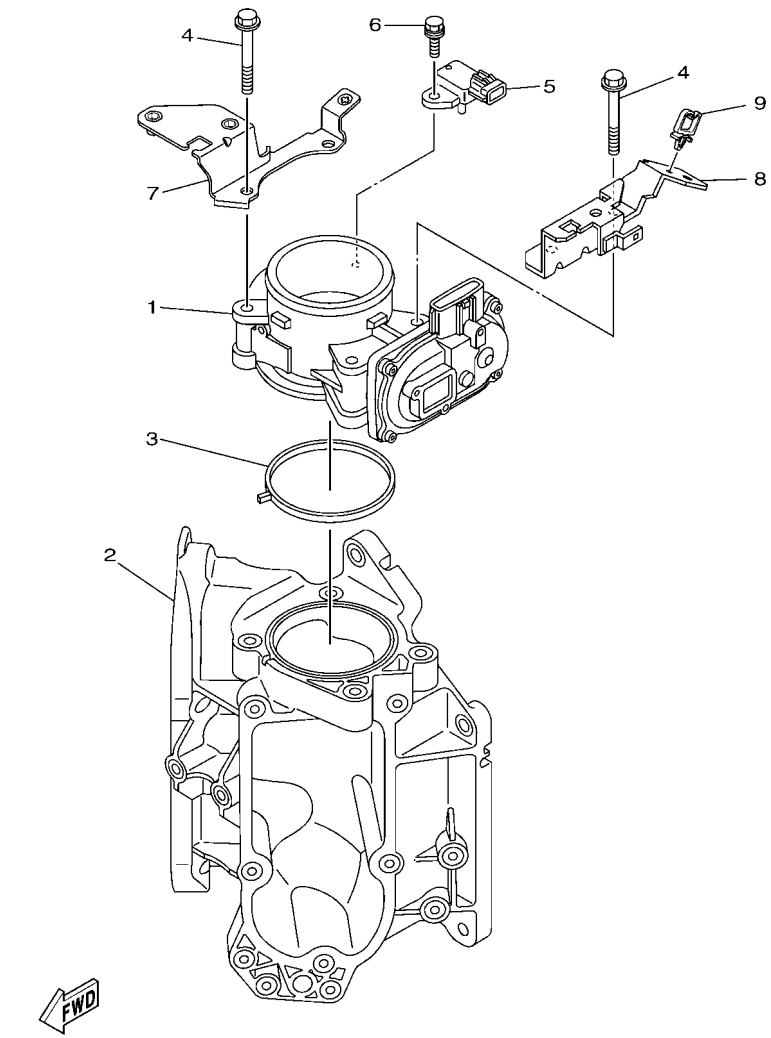

6KA1100-V120

FIG. 11 THROTTLE BODY ASSY 1 — CARTER D'ACCELERATEUR 1

REF. NO.	PART NO. N° PIECES	DESCRIPTION DESCRIPTION	XCB	XCB2	NCB	NCB2		REMARKS REMARQUES
1	6CB–13751–12	BODY, THROTTLE 1 CARTER 1	1	1	1	1		
2	6CB–13711–00	MIXING BODY CHAMBRE DE MELANGE	1	1	1	1		
3	6CB–13556–00	GASKET, MANIFOLD JOINT, TUBULURE	1	1	1	1		
4	95D75–08060	BOLT, FLANGE DEEP RECESS BOULON FIXATION	4	4	4	4		
5	6P2–82380–00	SENSOR, PRESSURE SONDE DE PRESSION	1	1	1	1		
6	97E75–06620	BOLT, HEXAGON W/W DEEP RECESS VIS HEXAGONAL AVC RONDELLE	1	1	1	1		
7	6KA–13898–00	HOLDER SUPPORT	1	1	1	1		
8	6CB–13898–11	HOLDER SUPPORT	1	1	1	1		
9	90464–08004	CLAMP BRIDE	1	1	1	1		

FIG. 12 THROTTLE BODY ASSY 2 — CARTER D'ACCELERATEUR 2

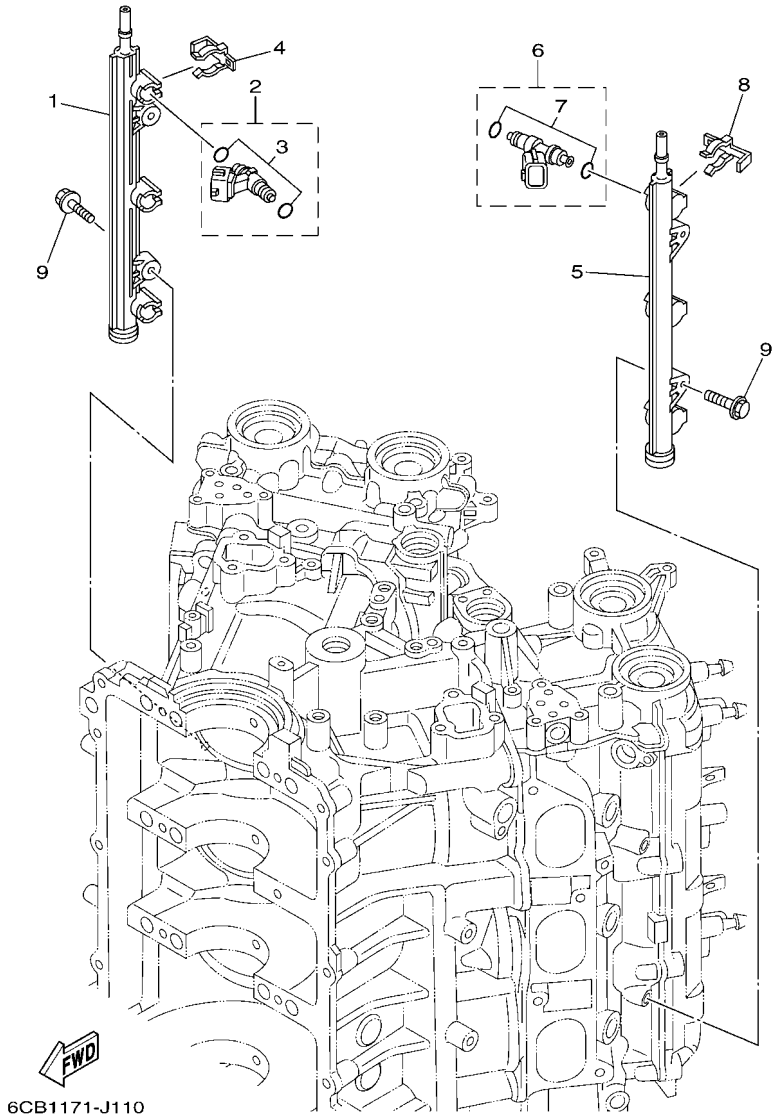

REF. NO.	PART NO. N° PIECES	DESCRIPTION DESCRIPTION	XCB	XCB2	NCB	NCB2		REMARKS REMARQUES
1	6CB–13161–11	PIPE, DELIVERY 1 DURITE REFOULEMENT 1	1	1	1	1		
2	6AW–13761–01	INJECTOR INJECTEUR	3	3	3	3		
3	6AW–1410B–00	.PACKING KIT .POCHETTE DE JOINTS	1	1	1	1		
4	6CB–13577–00	CLIP AGRAFE	3	3	3	3		
5	6CB–13171–11	PIPE, DELIVERY 2 DURITE REFOULEMENT	1	1	1	1		
6	6AW–13761–01	INJECTOR INJECTEUR	3	3	3	3		
7	6AW–1410B–00	.PACKING KIT .POCHETTE DE JOINTS	1	1	1	1		
8	6CB–13577–00	CLIP AGRAFE	3	3	3	3		
9	90119–06047	BOLT, WITH WASHER BOULON, AVEC RONDELLE	4	4	4	4		

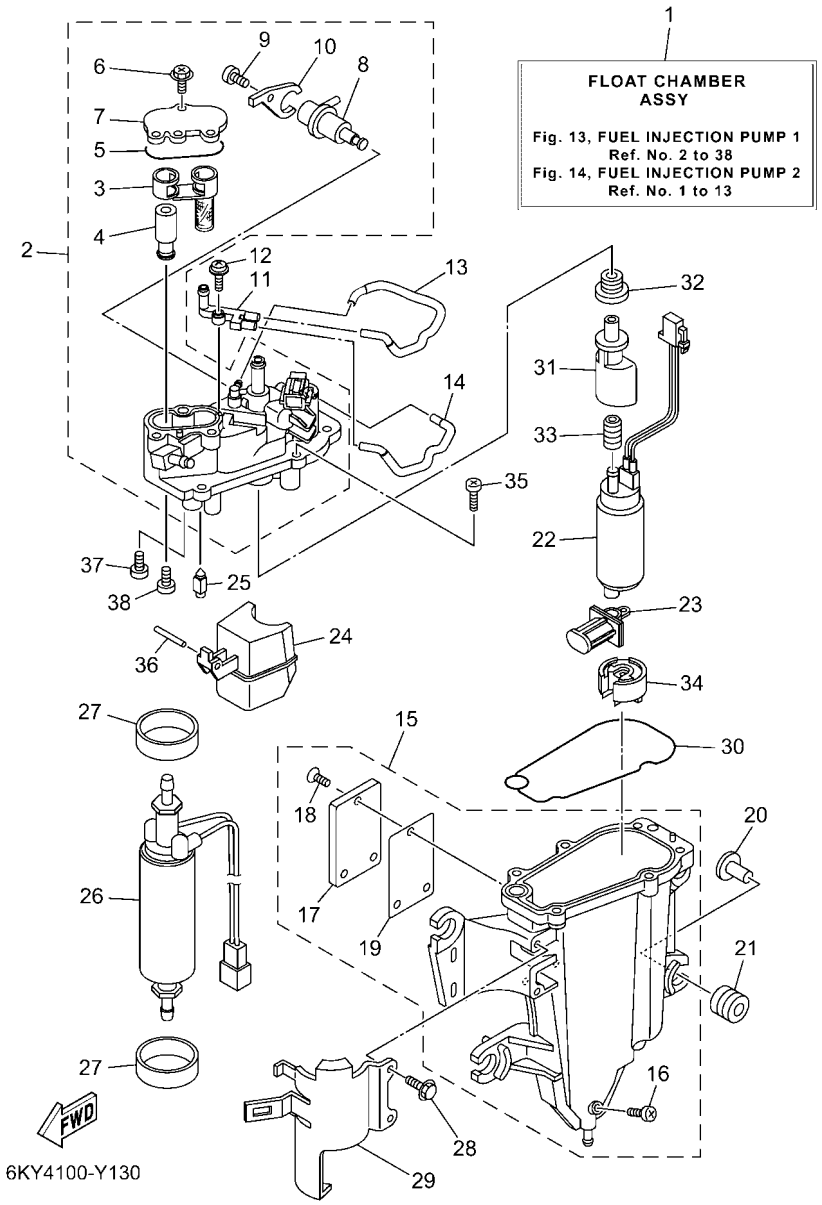

FIG. 13 FUEL INJECTION PUMP 1 POMPE A INJECTEUR 1

REF. NO.	PART NO. N° PIECES	DESCRIPTION DESCRIPTION	XCB	XCB2	NCB	NCB2		REMARKS REMARQUES
1	6CB–14180–17	FLOAT CHAMBER ASSY CUVE DE FLOTTEUR	1	1	1	1		
2	6CB–14182–02	COVER, FLOAT CHAMBER COUVERCLE, CUVE DE FLOTTEUR	1	1	1	1		
3	6CB–24501–01	.FILTER, FUEL .FILTRE	1	1	1	1		
4	6CB–24460–00	.RELIEF VALVE ASSY .SOUPAPE DE SECURITE COMPLET	1	1	1	1		
5	6CB–13016–00	.O-RING .JOINT TORIQUE	1	1	1	1		
6	6CB–14216–00	.SCREW .VIS	3	3	3	3		
7	6CB–24217–00	.COVER .COUVERCLE	1	1	1	1		
8	6CB–13906–01	.REGULATOR, PRESSURE .REGULATEUR DE PRESSION	1	1	1	1		
9	6CB–14564–00	.SCREW .VIS	1	1	1	1		
10	6CB–14146–00	.PLATE .PLAQUE	1	1	1	1		
11	68V–24379–10	PIPE, JOINT 4 DURITE RACCORDEMENT 4	1	1	1	1		
12	68V–14216–00	SCREW VIS	1	1	1	1		
13	6CB–1475H–00	PIPE 5 DURITE 5	1	1	1	1		
14	6CB–1475J–00	PIPE 6 DURITE 6	1	1	1	1		
15	6ML–14181–00	BODY, FLOAT CHAMBER 1 CORPS, CUVE DE FLOTTEUR 1	1	1	1	1		
16	6P2–14191–00	.PLUG, DRAIN .PLOT, VIDANGE	1	1	1	1		
17	6EK–24452–00	.COVER .COUVERCLE	1	1	1	1		
18	6K8–14591–10	.SCREW .VIS	3	3	3	3		
19	6CB–24482–00	.GASKET 1 .JOINT 1	1	1	1	1		
20	63P–13716–00	COLLAR COLLERETTE	4	4	4	4		
21	6CB–13593–00	DAMPER AMORTISSEUR	4	4	4	4		
22	6CB–13907–12	FUEL PUMP COMP. POMPE A CARBURANT COMP.	1	1	1	1		
23	63P–13915–00	FILTER FILTRE	1	1	1	1		
24	6CB–14985–00	FLOAT FLOTTEUR	1	1	1	1		
25	6CB–14546–00	VALVE, NEEDLE POINTEAU	1	1	1	1		
26	6GR–24410–02	FUEL PUMP ASSY POMPE A ESSENCE	1	1	1	1		
27	6CB–24492–00	BUSH, FUEL PUMP BAGUE	2	2	2	2		

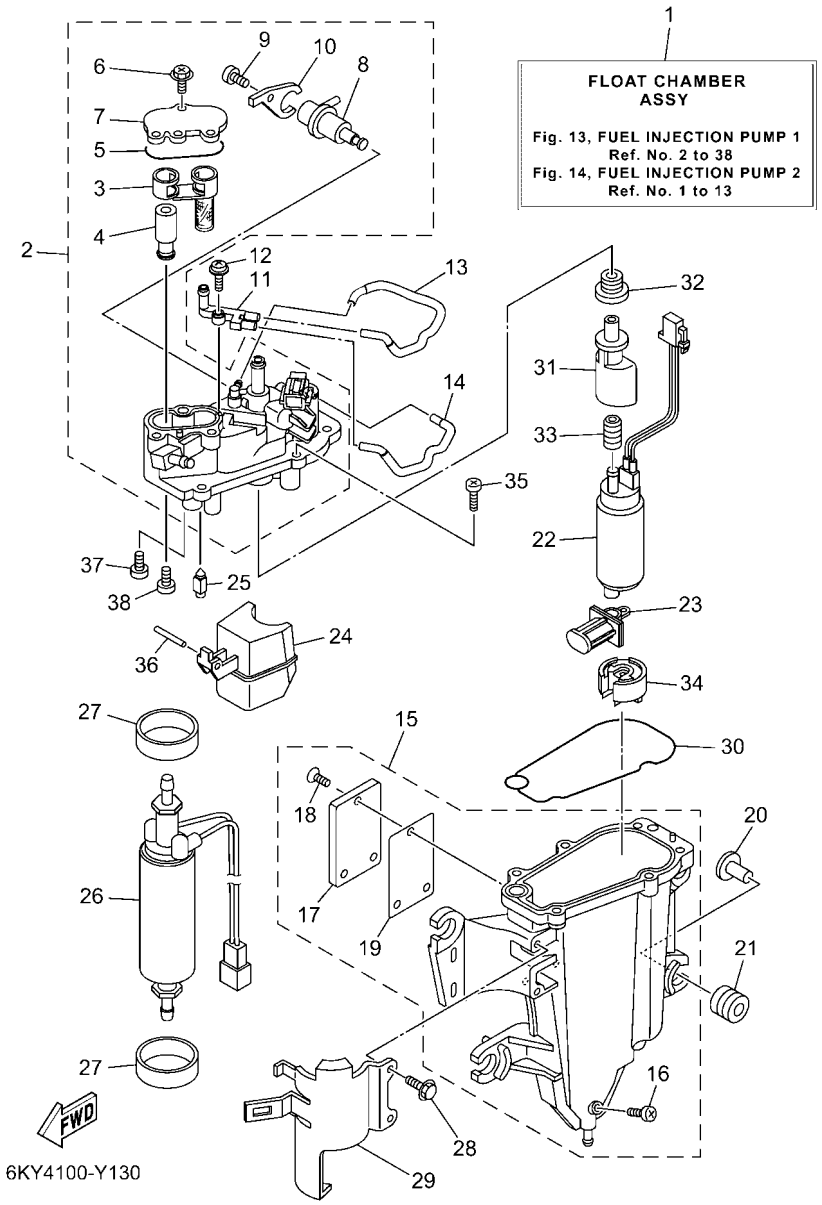

FIG. 13 FUEL INJECTION PUMP 1 — POMPE A INJECTEUR 1

REF. NO.	PART NO. N° PIECES	DESCRIPTION DESCRIPTION	XCB	XCB2	NCB	NCB2		REMARKS REMARQUES
28	6CB–24592–00	BOLT BOLTE	2	2	2	2		
29	6CB–24491–00	BRACKET, FUEL PUMP SUPPORT, POMPE A ESSENCE	1	1	1	1		
30	6CB–14984–00	GASKET, FLOAT CHAMBER JOINT, CUVE DE FLOTTEUR	1	1	1	1		
31	6KA–13132–00	JOINT RACCORD	1	1	1	1		
32	6LH–1447B–00	BUSH 1 DOUILLE 1	1	1	1	1		
33	6AW–13781–00	DAMPER, PUMP AMORTISSEUR, POMPE	1	1	1	1		
34	6AW–13784–00	COVER, PUMP COUVERCLE, POMPE	1	1	1	1		
35	63P–14567–00	SCREW VIS	6	6	6	6		
36	6P2–14386–00	PIN, FLOAT AXE, FLOTTEUR	1	1	1	1		
37	4SV–24453–00	SCREW VIS	1	1	1	1		
38	98507–04008	SCREW, PAN HEAD VIS, TETE TRONCONIQUE	1	1	1	1		

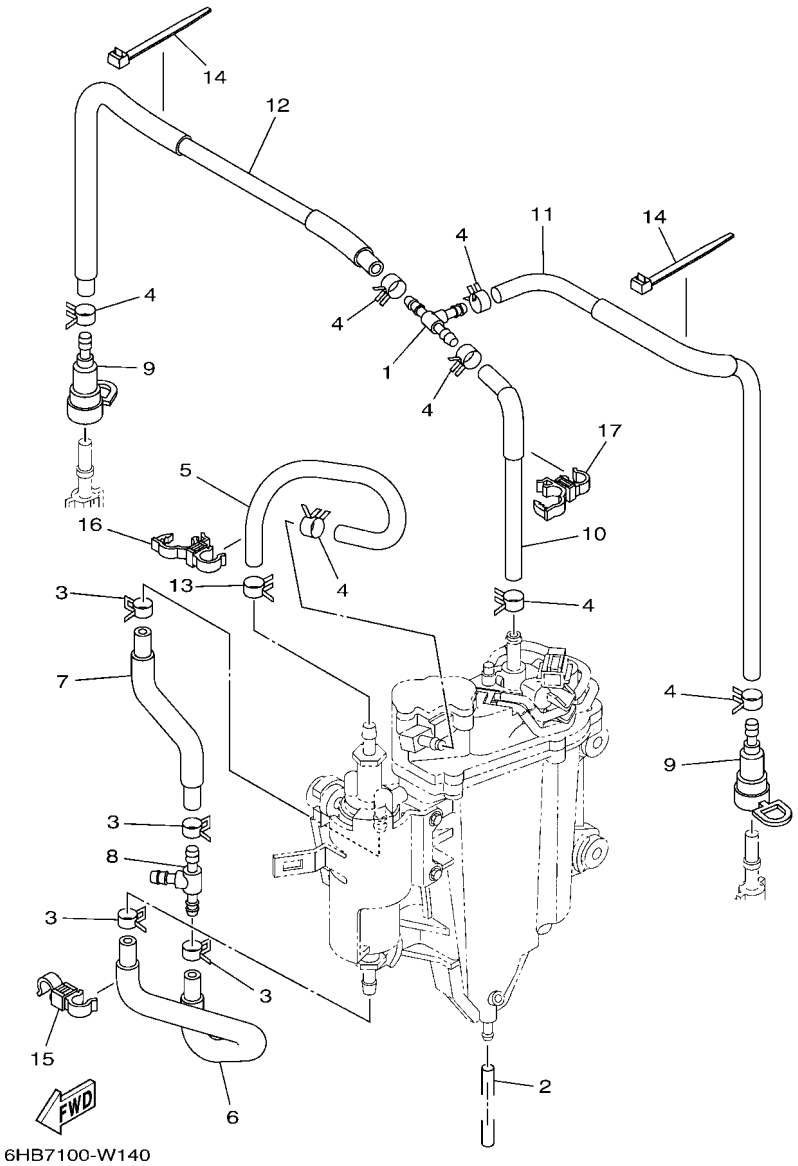

FIG. 14 FUEL INJECTION PUMP 2 — POMPE A INJECTEUR 2

REF. NO.	PART NO. N° PIECES	DESCRIPTION DESCRIPTION	XCB	XCB2	NCB	NCB2		REMARKS REMARQUES
1	6CB–24461–00	PIPE, JOINT DURITE, RACCORDEMENT	1	1	1	1		
2	6P2–14149–00	PIPE DURITE	1	1	1	1		
3	90467–141A2	CLIP JONC	4	4	4	4		
4	68V–13577–01	CLIP AGRAFE	7	7	7	7		
5	6CB–24324–00	PIPE 13 DURITE 13	1	1	1	1		
6	6CB–24317–00	PIPE 7 DURITE 7	1	1	1	1		
7	6CB–24323–00	PIPE 12 DURITE 12	1	1	1	1		
8	6E5–24378–00	PIPE, JOINT 3 DURITE, RACCORDEMENT 3	1	1	1	1		
9	60E–24300–01	FUEL PIPE JOINT DURITE RACCORDEMT. A ESSENCE	2	2	2	2		
10	6CB–13971–01	PIPE, FUEL 1 TUBE 1, CARBURANT	1	1	1	1		
11	6CB–13974–01	PIPE, FUEL 4 TUBE 4, CARBURANT	1	1	1	1		
12	6CB–13972–00	PIPE, FUEL 2 TUBE 2, CARBURANT	1	1	1	1		
13	90467–140A9	CLIP JONC	1	1	1	1		
14	90465–14M66	CLAMP BRIDE	2	2	2	2		
15	90464–12009	CLAMP BRIDE	1	1	1	1		
16	90464–12012	CLAMP BRIDE	1	1	1	1		
17	90464–12012	CLAMP BRIDE	1	1	1	1		

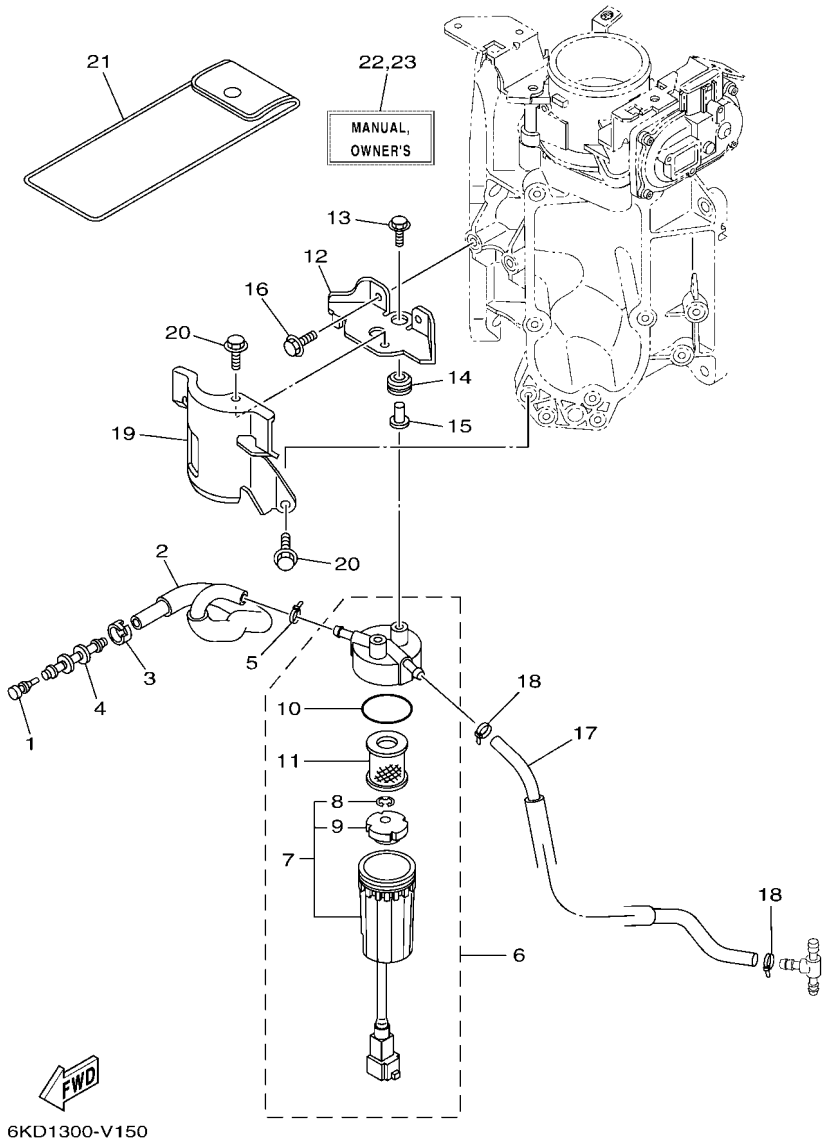

FIG. 15 FUEL 1 — CARBURANT 1

REF. NO.	PART NO. N° PIECES	DESCRIPTION DESCRIPTION	XCB	XCB2	NCB	NCB2		REMARKS REMARQUES
1	689–85547–01	DAMPER AMORTISSEUR	1	1	1	1		
2	6KA–24314–10	PIPE 4 DURITE 4	1	1	1	1		
3	6E5–24351–51	BAND 1 COLLIER 1	1	1	1	1		
4	6AW–24377–01	PIPE, JOINT 2 DURITE RACCORDEMENT 2	1	1	1	1		
5	90465–11M10	CLAMP BRIDE	1	1	1	1		
6	6P3–24560–23	FILTER ASSY ENS FILTRE	1	1	1	1		
7	6P3–WS24B–21	.CUP, FILTER (WITH TAG) .CUVETTE, FILTRE (AVEC TAG)	1	1	1	1		
8	6P3–24519–00	..CLIP ..JONC	1	1	1	1		
9	6P3–24469–00	..FLOAT, WATER LEVEL ..FLOTTEUR	1	1	1	1		
10	6P3–24564–00	.GASKET .JOINT	1	1	1	1		
11	6P3–24563–02	.ELEMENT, FILTER .ELEMENT, FILTRE	1	1	1	1		
12	6CB–24566–00	BRACKET, FILTER SUPPORT, FILTRE	1	1	1	1		
13	90119–06309	BOLT, WITH WASHER BOULON, AVEC RONDELLE	2	2	2	2		
14	90480–10M23	GROMMET PASSE-FIL	2	2	2	2		
15	90387–06289	COLLAR COLLERETTE	2	2	2	2		
16	95D95–06016	BOLT, FLANGE DEEP RECESS BOULON FIXATION	2	2	2	2		
17	6CB–24313–B0	PIPE 3 DURITE 3	1	1	1	1		
18	90465–11M10	CLAMP BRIDE	2	2	2	2		
19	6CB–24596–01	COVER COUVERCLE	1	1	1	1		
20	95D95–06014	BOLT, FLANGE DEEP RECESS BOULON FIXATION	2	2	2	2		
21	69J–28100–03	TOOL KIT TROUSSE A OUTILS	1	1	1	1		AP AP
22	6KF–28199–75–E0	MANUAL,OWNER'S MANUEL D'UTILISATION	1	1	1	1		UR (E) UR (E)
	6KF–28199–75–F0	MANUAL,OWNER'S MANUEL D'UTILISATION	1	1	1	1		UR (F) UR (F)
	6KF–28199–75–S0	MANUAL,OWNER'S MANUEL D'UTILISATION	1	1	1	1		UR (ES) UR (ES)
	6KF–28199–75–G0	MANUAL,OWNER'S MANUEL D'UTILISATION	1	1	1	1		UR (D) UR (D)
	6KF–28199–75–D0	MANUAL,OWNER'S MANUEL D'UTILISATION	1	1	1	1		UR (NL) UR (NL)
	6KF–28199–75–H0	MANUAL,OWNER'S MANUEL D'UTILISATION	1	1	1	1		UR (I) UR (I)

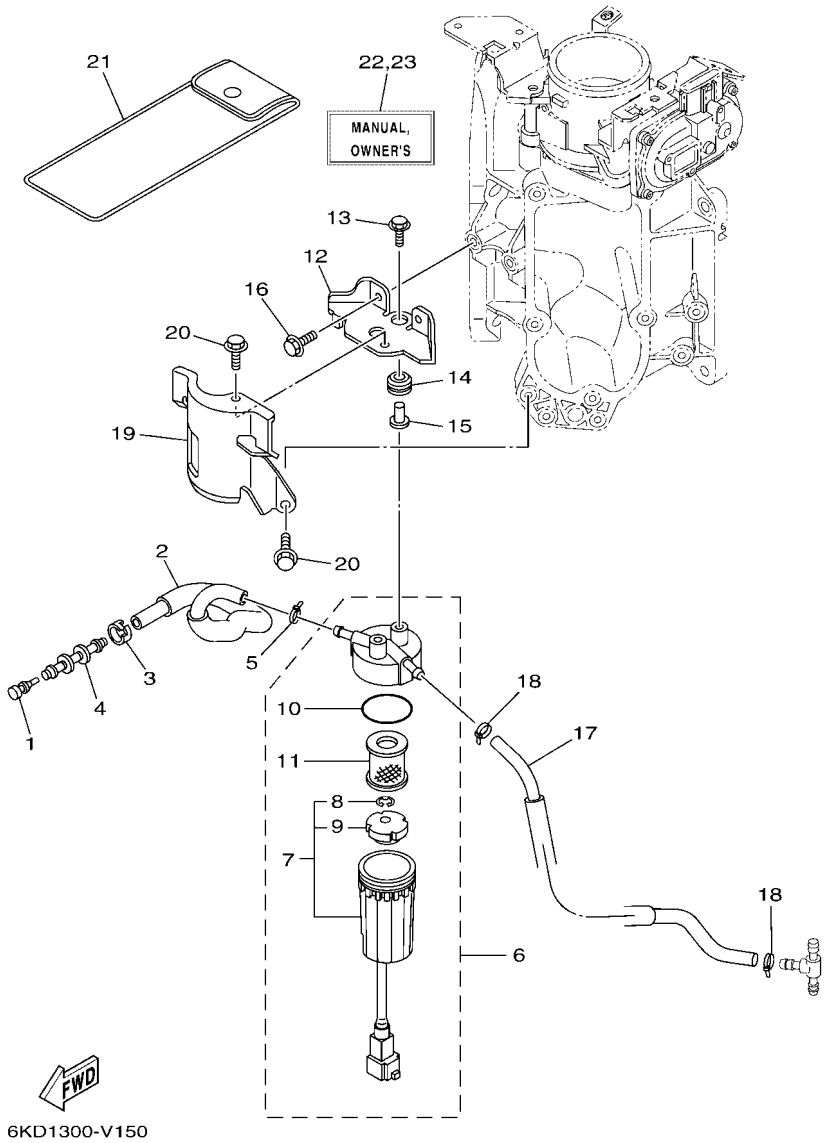

FIG. 15 FUEL 1 — CARBURANT 1

REF. NO.	PART NO. N° PIECES	DESCRIPTION DESCRIPTION	XCB	XCB2	NCB	NCB2		REMARKS REMARQUES
23	6KF–28199–85–K0	MANUAL,OWNER'S MANUEL D'UTILISATION	1	1	1	1		UR (DK) UR (DK)
	6KF–28199–85–R0	MANUAL,OWNER'S MANUEL D'UTILISATION	1	1	1	1		UR (GR) UR (GR)
	6KF–28199–85–P0	MANUAL,OWNER'S MANUEL D'UTILISATION	1	1	1	1		UR (P) UR (P)
	6KF–28199–85–N0	MANUAL,OWNER'S MANUEL D'UTILISATION	1	1	1	1		UR (N) UR (N)
	6KF–28199–85–M0	MANUAL,OWNER'S MANUEL D'UTILISATION	1	1	1	1		UR (S) UR (S)
	6KF–28199–85–L0	MANUAL,OWNER'S MANUEL D'UTILISATION	1	1	1	1		UR (SF) UR (SF)

FIG. 16 FUEL 2 — CARBURANT 2

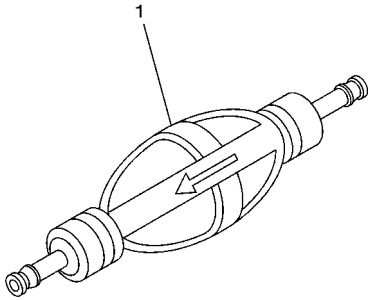

68V9110-J110

REF. NO.	PART NO. N° PIECES	DESCRIPTION DESCRIPTION	XCB	XCB2	NCB	NCB2		REMARKS REMARQUES
1	6AW–24360–02	PRIMER PUMP ASSY POMPE D'AMORCAGE	1	1	1	1		AP AP

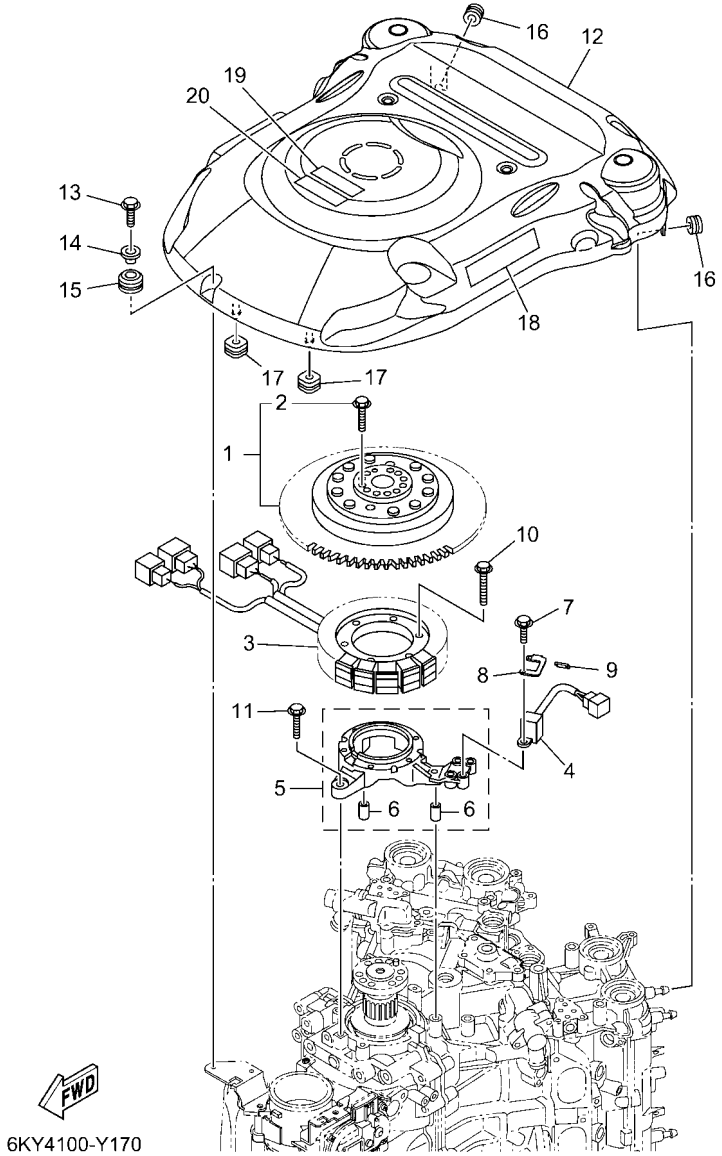

FIG. 17 GENERATOR — GENERATRICE

REF. NO.	PART NO. N° PIECES	DESCRIPTION DESCRIPTION	XCB	XCB2	NCB	NCB2		REMARKS REMARQUES
1	6CE–W8145–01	ROTOR ASSY WITH BOLTS ROTOR COMPLET AVEC BOULON	1	1	1	1		
2	6EK–W9010–00	.BOLT SET .BOULON ENS.	1	1	1	1		
3	6CE–81410–00	STATOR ASSY STATOR COMPLET	1	1	1	1		
4	6CB–85580–01	COIL, PULSER BOBINE, PULSEUR	1	1	1	1		
5	6CB–85561–00	BASE, MAGNETO BASE, MAGNETO	1	1	1	1		
6	99530–08012	.PIN, DOWEL .GOUJON, D'ASSEMBLAGE	2	2	2	2		
7	97595–05520	BOLT, WITH WASHER VIS HEXAGONAL AVC RONDELLE	2	2	2	2		
8	6ML–85592–00	STAY, PULSER SUPPORT, PULSATION BOBINE	1	1	1	1		
9	90465–11M10	CLAMP BRIDE	1	1	1	1		
10	95022–06035	BOLT, FLANGE BOULON, A COLLERETTE	6	6	6	6		
11	95D95–06030	BOLT, FLANGE DEEP RECESS BOULON FIXATION	4	4	4	4		
12	6CE–81337–01	COVER, FLYWHEEL COUVERCLE, VOLANT	1	1	1	1		
13	95D95–06025	BOLT, FLANGE DEEP RECESS BOULON FIXATION	1	1	1	1		
14	90387–06285	COLLAR COLLERETTE	1	1	1	1		
15	90480–15M31	GROMMET PASSE-FIL	1	1	1	1		
16	90480–12314	GROMMET PASSE-FIL	2	2	2	2		
17	6CB–85516–01	SPACER ENTRETOISE	2	2	2	2		
18	6CE–13437–61	MARK, CAUTION MAKER	1	1	1	1		
19	6EE–81994–41	LABEL, SAFETY ETIQUETTE, SECURITE	1	1	1	1		
20	6EE–81994–51	LABEL, SAFETY ETIQUETTE, SECURITE	1	1	1	1		

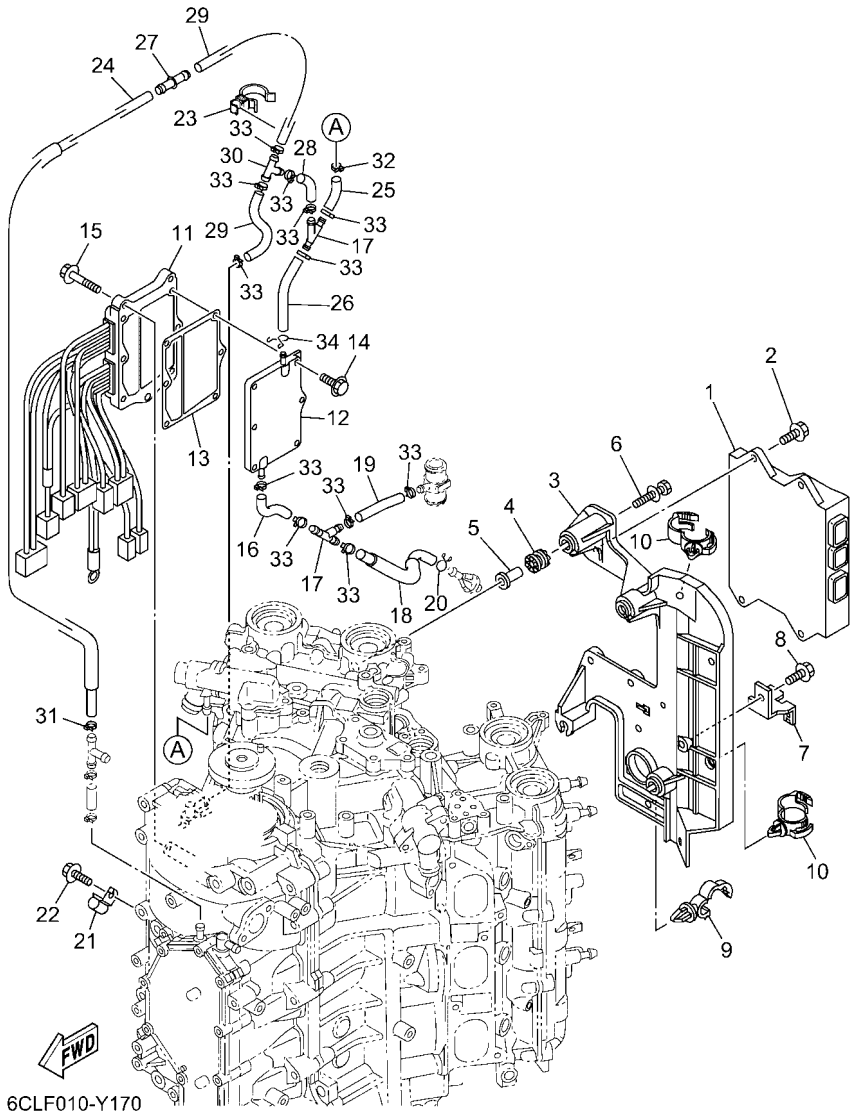

FIG. 18 ELECTRICAL 1 — PARTIE ELECTRIQUE 1

REF. NO.	PART NO. N° PIECES	DESCRIPTION DESCRIPTION	XCB	XCB2	NCB	NCB2		REMARKS REMARQUES
1	6KA–8591A–02	ENGINE CONTROL UNIT ASSY BLOC DE CONTROL	1	1	1	1		
2	95D95–06020	BOLT, FLANGE DEEP RECESS BOULON FIXATION	4	4	4	4		
3	6CB–82316–01	BRACKET, IGNITION COIL SUPPORT, BOBINE D'ALLUMAGE	1	1	1	1		
4	64J–85516–01	SPACER ENTRETOISE	4	4	4	4		
5	69M–42758–01	COLLAR ENTRETOISE	4	4	4	4		
6	90119–06293	BOLT, WITH WASHER BOULON, AVEC RONDELLE	4	4	4	4		
7	6BR–81845–00	PLATE PLAQUE	1	1	1	1		
8	95D95–06012	BOLT, FLANGE DEEP RECESS BOULON FIXATION	1	1	1	1		
9	90464–13249	CLAMP BRIDE	1	1	1	1		
10	90464–20181	CLAMP BRIDE	2	2	2	2		
11	6CE–81960–10	RECTIFIER & REGULATOR ASSY REDRESSEUR REGULATEUR CPLT	1	1	1	1		
12	6CE–81972–00–9S	COVER, RECTIFIER COUVERCLE, REDRESSEUR	1	1	1	1		
13	6CE–81975–00	PLATE, RECTIFIER FITTING PLAQUE, FIXATION DU REDRESSEUR	1	1	1	1		
14	90119–06MA3	BOLT, WITH WASHER BOULON, AVEC RONDELLE	6	6	6	6		
15	95D95–06025	BOLT, FLANGE DEEP RECESS BOULON FIXATION	3	3	3	3		
16	6CE–1248A–00	PIPE 8 DURITE 8	1	1	1	1		
17	6CE–24377–00	PIPE, JOINT 2 DURITE RACCORDEMENT 2	2	2	2	2		
18	6CE–12483–00	PIPE 3 DURITE 3	1	1	1	1		
19	90445–107A5	HOSE (L30) DURITE (L30)	1	1	1	1		
20	90467–09M09	CLIP JONC	1	1	1	1		
21	90462–06013	CLAMP BRIDE	1	1	1	1		
22	95023–06012	BOLT BOULON, A COLLERETTE	1	1	1	1		
23	90464–26002	CLAMP BRIDE	1	1	1	1		
24	6CE–12481–10	PIPE 1 DURITE 1	1	1	1	1		
25	6CE–14872–00	PIPE 2 DURITE 2	1	1	1	1		
26	6CE–12485–00	PIPE 5 DURITE 5	1	1	1	1		
27	6CE–24376–01	PIPE, JOINT 1 DURITE 1, RACCORDEMENT	1	1	1	1		

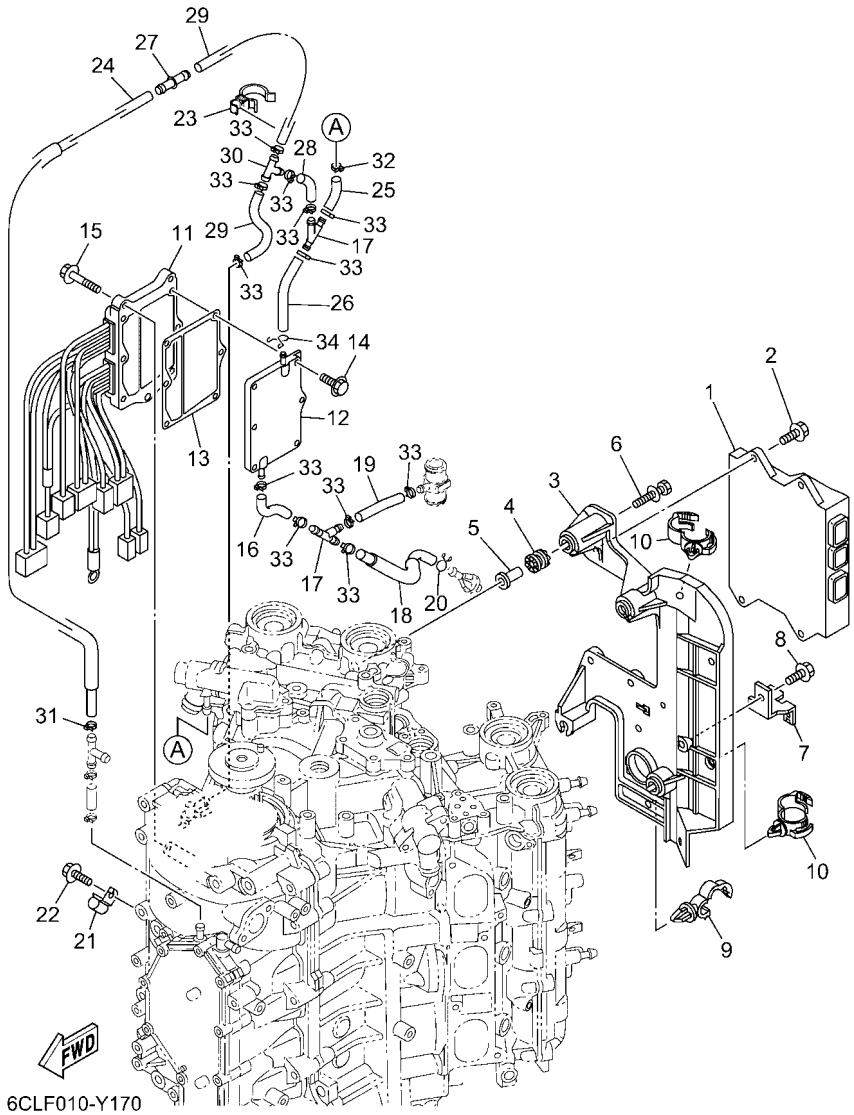

FIG. 18 ELECTRICAL 1 — PARTIE ELECTRIQUE 1

REF. NO.	PART NO. N° PIECES	DESCRIPTION DESCRIPTION	XCB	XCB2	NCB	NCB2		REMARKS REMARQUES
28	6CE–14872–00	PIPE 2 DURITE 2	1	1	1	1		
29	90445–09068	HOSE (L110) DURITE (L110)	2	2	2	2		
30	688–24378–00	PIPE, JOINT 3 DURITE RACCORDEMENT 3	1	1	1	1		
31	90465–11M10	CLAMP BRIDE	1	1	1	1		
32	90465–11M10	CLAMP BRIDE	1	1	1	1		
33	90465–11M10	CLAMP BRIDE	12	12	12	12		
34	90467–08M18	CLIP JONC	1	1	1	1		

FIG. 19 ELECTRICAL 2 — PARTIE ELECTRIQUE 2

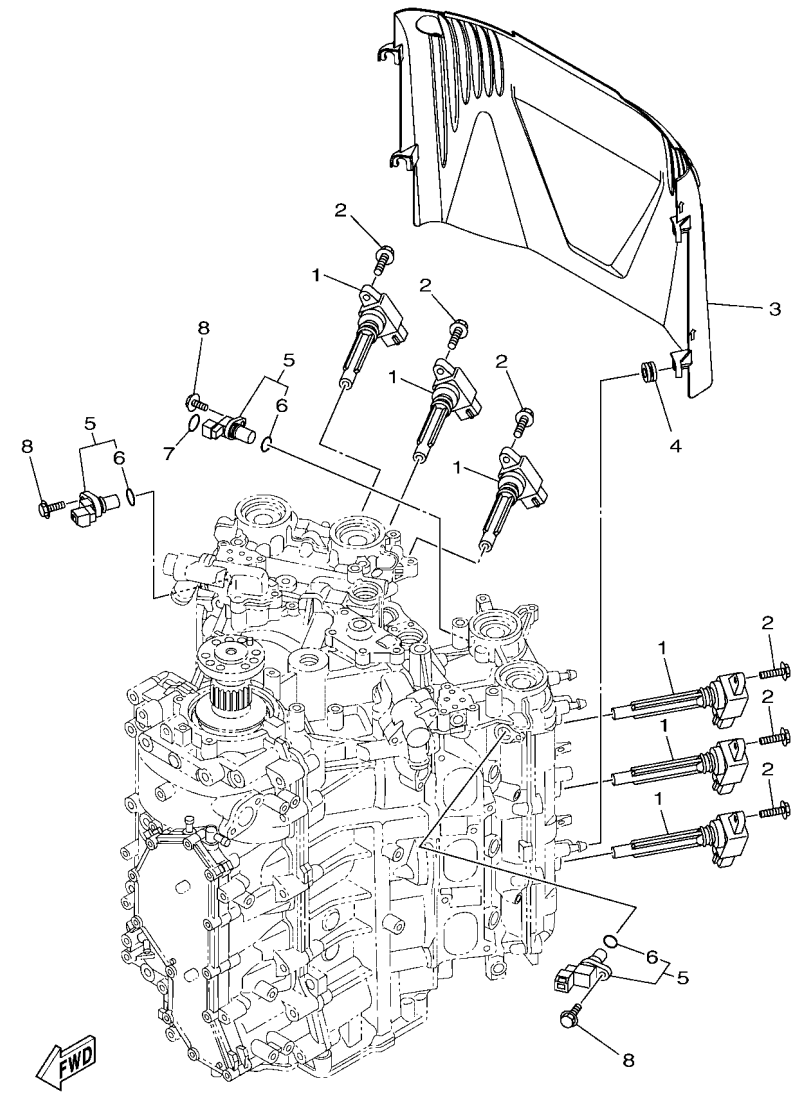

6KA1100-V200

REF. NO.	PART NO. N° PIECES	DESCRIPTION DESCRIPTION	XCB	XCB2	NCB	NCB2		REMARKS REMARQUES
1	6CB–82310–02	IGNITION COIL ASSY BOBINE D'ALLUMAGE	6	6	6	6		
2	95D95–06025	BOLT, FLANGE DEEP RECESS BOULON FIXATION	6	6	6	6		
3	6CB–82314–00	COVER, IGNITION COIL COUVERCLE, BOBINE D'ALLUMAGE	1	1	1	1		
4	90480–12314	GROMMET PASSE-FIL	4	4	4	4		
5	6P2–85896–00	SENSOR, CAM POSITION SONDE DE CAME	3	3	3	3		
6	6P2–85075–00	.O-RING .JOINT TORIQUE	1	1	1	1		
7	93210–11001	O-RING JOINT TORIQUE	1	1	1	1		
8	97E95–06520	BOLT, HEXAGON W/W DEEP RECESS VIS HEXAGONAL AVC RONDELLE	3	3	3	3		

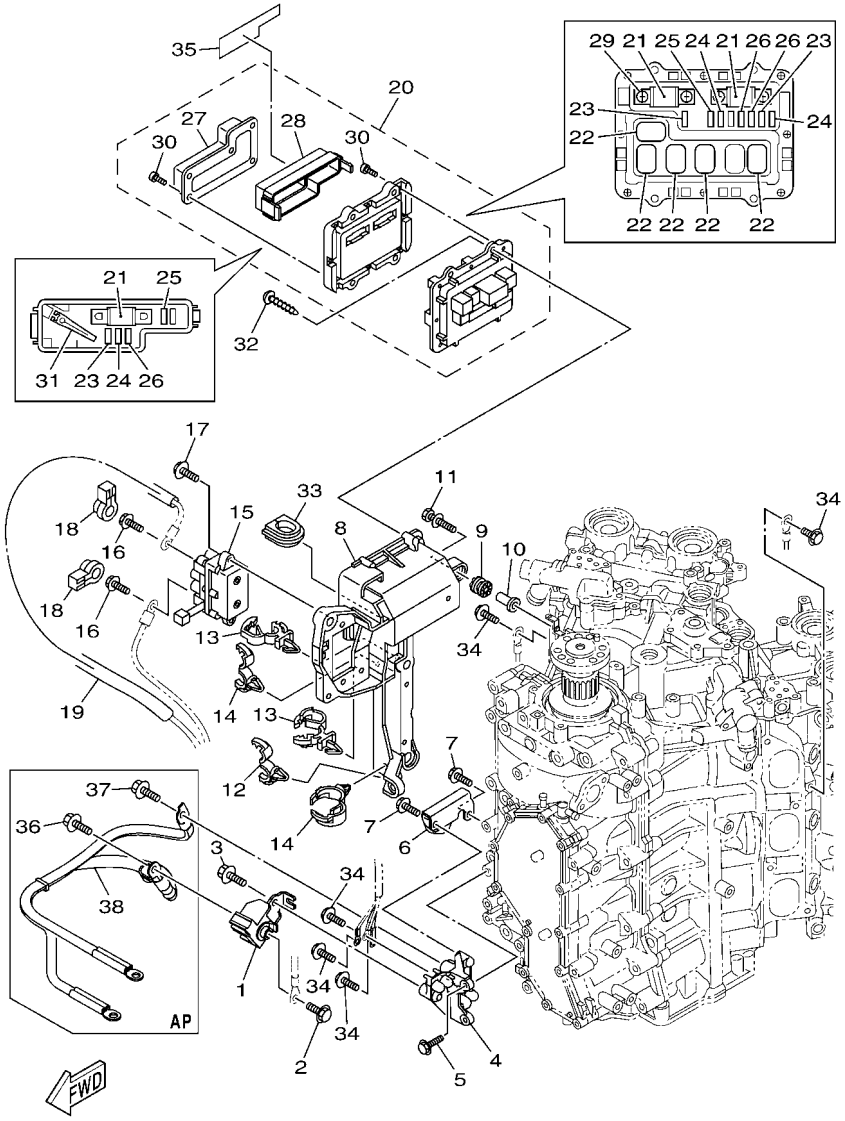

6KF1100-V200

FIG. 20 ELECTRICAL 3 — PARTIE ELECTRIQUE 3

REF. NO.	PART NO. N° PIECES	DESCRIPTION DESCRIPTION	XCB	XCB2	NCB	NCB2		REMARKS REMARQUES
1	6KF–81925–00	TERMINAL BORNE	1	1	1	1		
2	95D95–08016	BOLT, FLANGE DEEP RECESS BOULON FIXATION	1	1	1	1		
3	95814–08020	BOLT, FLANGE BOULON, A COLLERETTE	1	1	1	1		
4	6KA–81929–00	BRACKET, TERMINAL SUPPORT	1	1	1	1		
5	95D95–06020	BOLT, FLANGE DEEP RECESS BOULON FIXATION	2	2	2	2		
6	6KA–82588–00	PLATE PLAQUE	1	1	1	1		
7	95D95–06016	BOLT, FLANGE DEEP RECESS BOULON FIXATION	2	2	2	2		
8	6CB–81948–02	BRACKET SUPPORT	1	1	1	1		
9	64J–85516–01	SPACER ENTRETOISE	5	5	5	5		
10	69M–42758–01	COLLAR ENTRETOISE	5	5	5	5		
11	90119–06293	BOLT, WITH WASHER BOULON, AVEC RONDELLE	5	5	5	5		
12	90464–13249	CLAMP BRIDE	1	1	1	1		
13	90464–12183	CLAMP BRIDE	2	2	2	2		
14	90464–20181	CLAMP BRIDE	2	2	2	2		
15	6AW–W8195–10	RELAY ASSY RELAIS COMPLET	1	1	1	1		
16	97E95–06610	BOLT, HEXAGON W/W DEEP RECESS VIS HEXAGONAL AVC RONDELLE	2	2	2	2		
17	97513–06520	BOLT, WITH WASHER VIS HEXAGONAL AVC RONDELLE	2	2	2	2		
18	6P2–8183X–00	CAP, TERMINAL COUVERCLE, BORNE	2	2	2	2		
19	90446–15006	HOSE (L150) DURITE (L150)	1	1	1	1		
20	6CE–82170–11	FUSE BOX ASSY BOITE A FUSIBLES	1	1	1	1		
21	6CE–82151–00	.FUSE (100A) .FUSIBLE (100A)	3	3	3	3		
22	6AW–8195A–00	.RELAY ASSY .RELAIS COMPLET	5	5	5	5		
23	67F–82151–40	.FUSE (10A) .FUSIBLE (10A)	3	3	3	3		
24	67F–82151–50	.FUSE (15A) .FUSIBLE (15A)	3	3	3	3		
25	67F–82151–00	.FUSE (20A) .FUSIBLE (20A)	2	2	2	2		
26	67F–82151–10	.FUSE (30A) .FUSIBLE (30A)	3	3	3	3		
27	6CB–81639–10	.COVER .COUVERCLE	1	1	1	1		

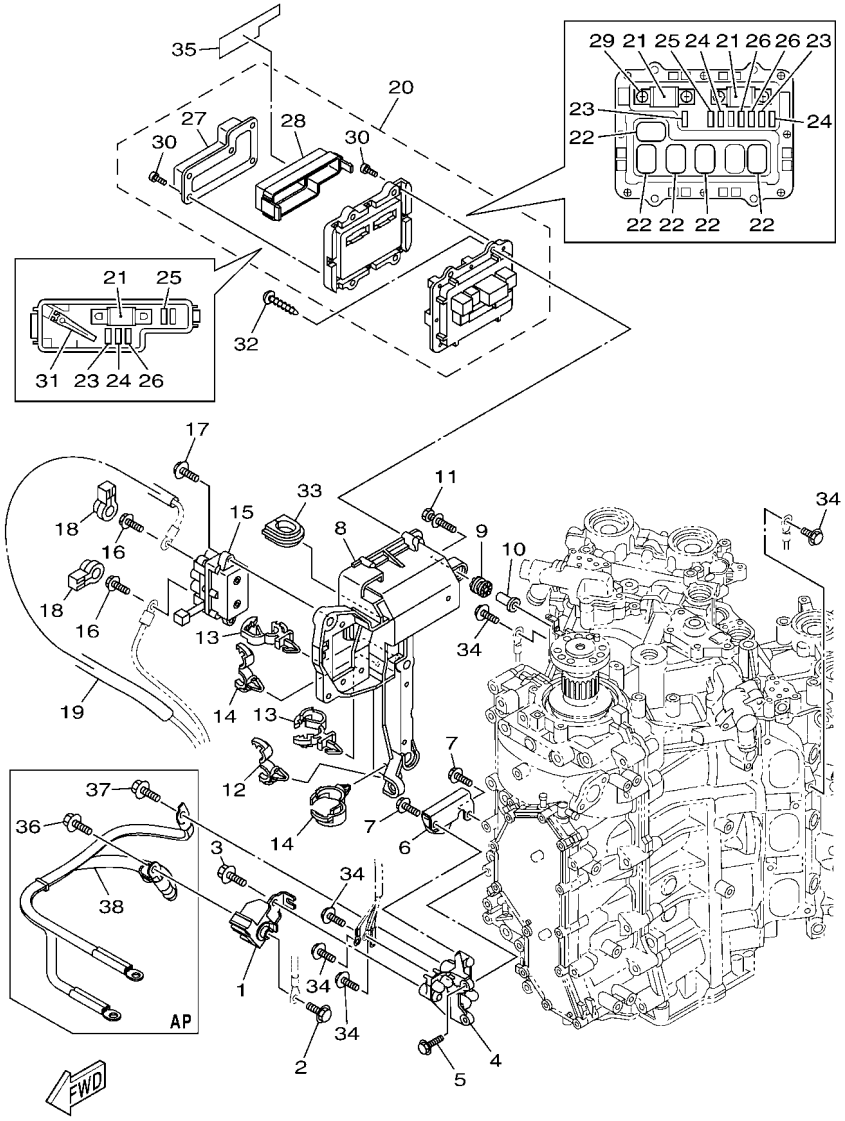

FIG. 20 ELECTRICAL 3 — PARTIE ELECTRIQUE 3

REF. NO.	PART NO. N° PIECES	DESCRIPTION DESCRIPTION	XCB	XCB2	NCB	NCB2		REMARKS REMARQUES
28	6CB–85544–00	.CASE .BOITIER	1	1	1	1		
29	68F–82846–00	.SCREW, PAN HEAD (M5) .VIS, TETE TRONCONIQUE (M5)	4	4	4	4		
30	6P2–82113–00	.SCREW (M3) .VIS (M3)	13	13	13	13		
31	67F–2812A–00	.PULLER, FUSE .TENDEUR, FUSIBLE	1	1	1	1		
32	97780–50620	SCREW, TAPPING VIS, TETE BOMBEE	4	4	4	4		
33	6P2–81336–01	GROMMET OEILLET CAOUTCHOUC	1	1	1	1		
34	97E95–06516	BOLT, HEXAGON W/W DEEP RECESS VIS HEXAGONAL AVC RONDELLE	5	5	5	5		
35	6CE–81919–21	GRAPHIC, REGULATOR ADHESIF, REGULATEUR	1	1	1	1		
36	97E95–08516	BOLT, HEXAGON W/W DEEP RECESS VIS HEXAGONAL AVC RONDELLE	1	1	1	1		AP AP
37	97E95–08516	BOLT, HEXAGON W/W DEEP RECESS VIS HEXAGONAL AVC RONDELLE	1	1	1	1		AP AP
38	6KA–82105–00	WIRE HARNESS FAISCEAU DE FILS	1	1	1	1		AP AP

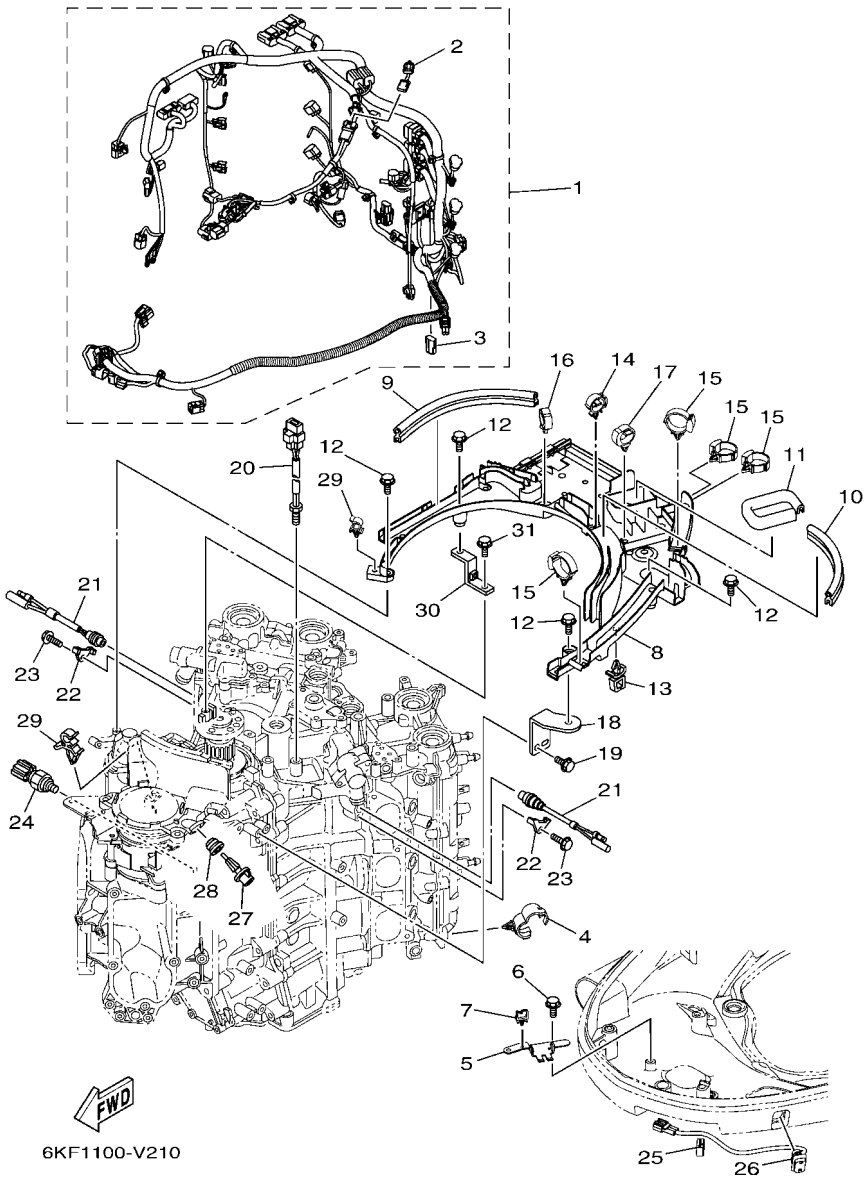

FIG. 21 ELECTRICAL 4 — PARTIE ELECTRIQUE 4

REF. NO.	PART NO. N° PIECES	DESCRIPTION DESCRIPTION	XCB	XCB2	NCB	NCB2		REMARKS REMARQUES
1	6KF–82590–02	WIRE HARNESS ASSY FAISCEAU DE FILS COMPLET	1	1	1	1		
2	6CE–81980–01	.DIODE ASSY .REDRESSEUR 2	1	1	1	1		
3	68V–82582–10	.CAP 1 (2P) .COUVERCLE 1 (2P)	1	1	1	1		
4	90464–20181	CLAMP BRIDE	4	4	4	4		
5	6KA–82594–00	CLAMP BRIDE	1	1	1	1		
6	95D95–06012	BOLT, FLANGE DEEP RECESS BOULON FIXATION	2	2	2	2		
7	90464–08004	CLAMP BRIDE	1	1	1	1		
8	6CB–82589–01	PROTECTER, WIRE HARNESS PROTECTEUR, FAISCEAU DE FILS	1	1	1	1		
9	6BG–42617–00	DAMPER, FORM BOURRELET, CAOUTCHOUC	1	1	1	1		
10	6CB–42617–00	DAMPER, FORM BOURRELET, CAOUTCHOUC	1	1	1	1		
11	6CB–42629–00	SEAL JOINT	1	1	1	1		
12	95D95–06020	BOLT, FLANGE DEEP RECESS BOULON FIXATION	5	5	5	5		
13	90464–11121	CLAMP BRIDE	1	1	1	1		
14	90464–18246	CLAMP BRIDE	1	1	1	1		
15	90464–12183	CLAMP BRIDE	4	4	4	4		
16	90464–20181	CLAMP BRIDE	1	1	1	1		
17	90464–20181	CLAMP BRIDE	1	1	1	1		
18	6CB–82388–00	PLATE PLAQUETTE	1	1	1	1		
19	95D95–06016	BOLT, FLANGE DEEP RECESS BOULON FIXATION	2	2	2	2		
20	6CB–85790–00	THERMOSENSOR ASSY SENSITOMETRE	1	1	1	1		
21	6P2–82560–01	THERMO SWITCH ASSY THERMO-CONTACT COMPLET	2	2	2	2		
22	6E9–82588–00	PLATE PLAQUE	2	2	2	2		
23	95D95–06012	BOLT, FLANGE DEEP RECESS BOULON FIXATION	2	2	2	2		
24	6AW–83651–01	SENDER, OIL PRESSURE RACCORD, PRESSION D'HUILE	1	1	1	1		
25	90464–16001	CLAMP BRIDE	1	1	1	1		
26	6GR–82563–00	TRIM & TILT SWITCH INCLINER ET PARER COMMUTATEUR	1	1	1	1		
27	63P–85886–00	SENSOR, AIR TEMPERATURE SONDE	1	1	1	1		

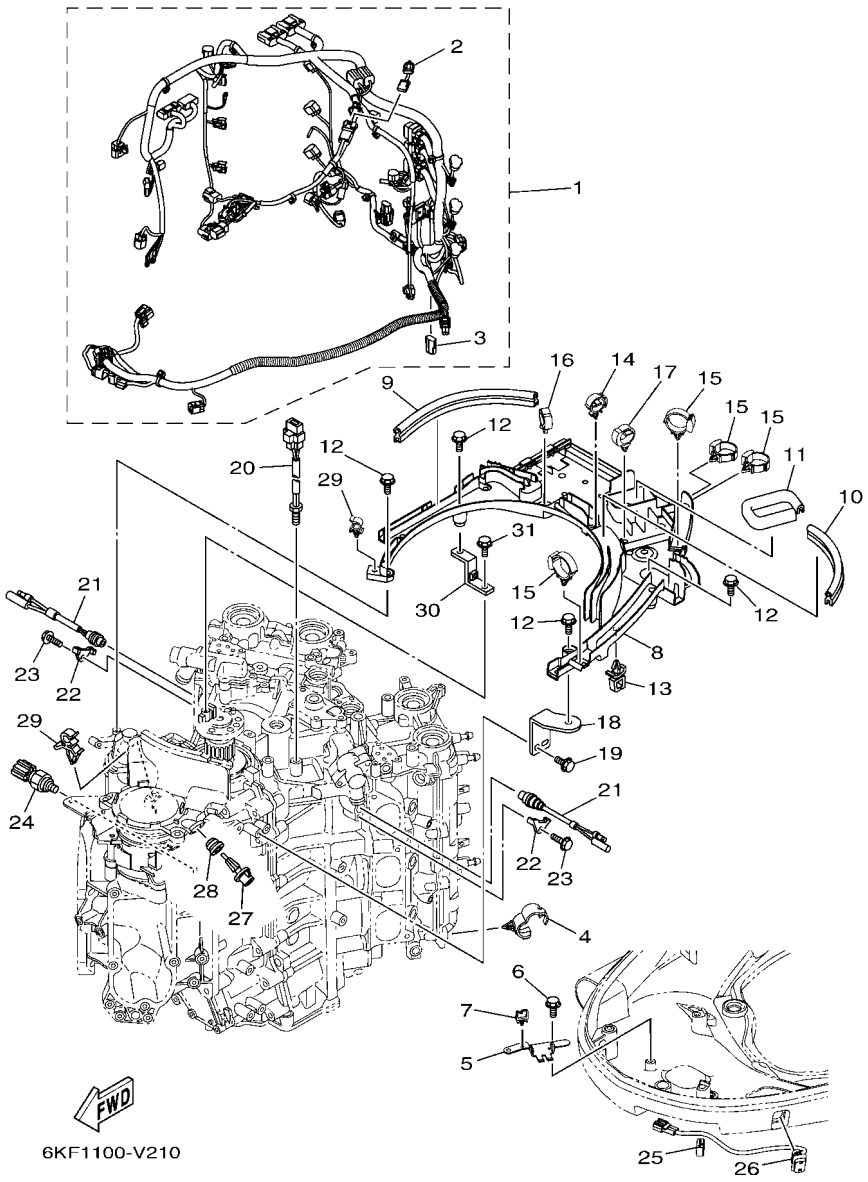

FIG. 21 ELECTRICAL 4 — PARTIE ELECTRIQUE 4

REF. NO.	PART NO. N° PIECES	DESCRIPTION DESCRIPTION	XCB	XCB2	NCB	NCB2		REMARKS REMARQUES
28	6CE–14435–00	GROMMET RONDELLE CAOUTCHOUC	1	1	1	1		
29	90464–09129	CLAMP BRIDE	2	2	2	2		
30	6CB–81952–00	HOLDER, RELAY SUPPORT, RELAIS	1	1	1	1		
31	95D95–06016	BOLT, FLANGE DEEP RECESS BOULON FIXATION	1	1	1	1		

FIG. 22 ELECTRICAL 5 — PARTIE ELECTRIQUE 5

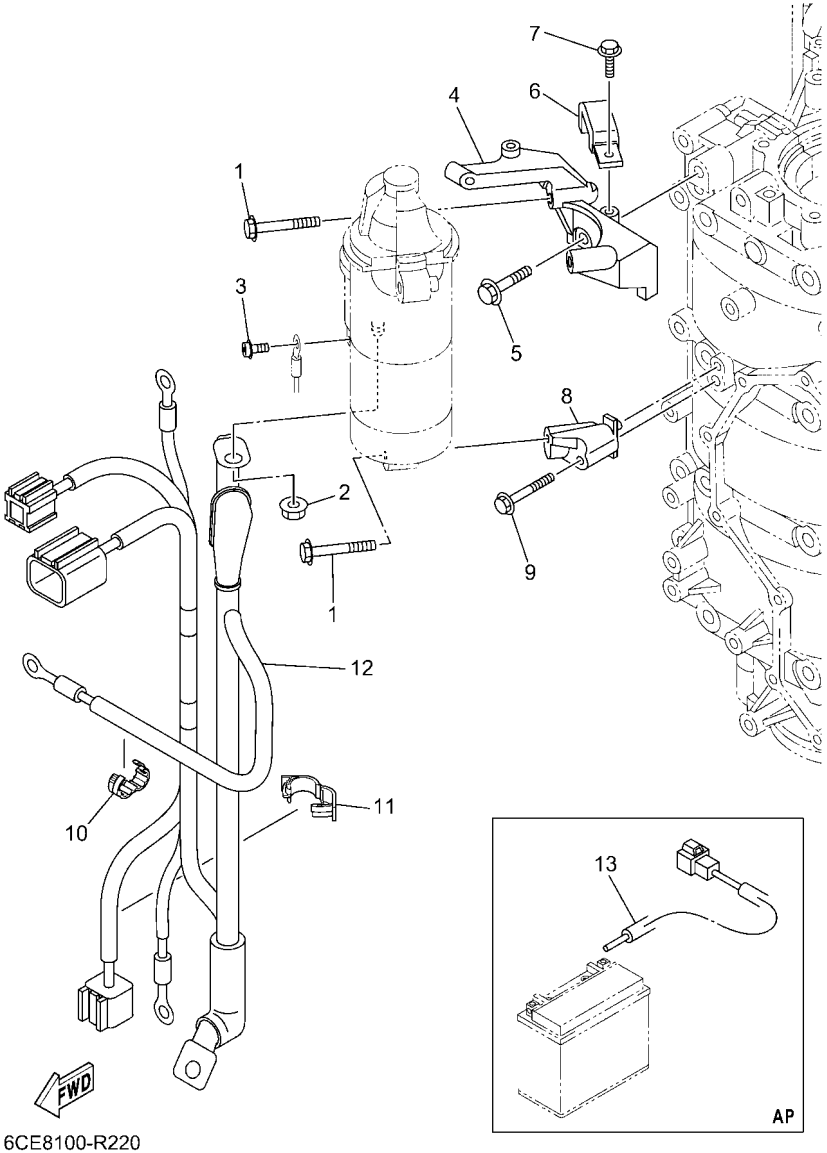

6CE8100-R220

REF. NO.	PART NO. N° PIECES	DESCRIPTION DESCRIPTION	XCB	XCB2	NCB	NCB2		REMARKS REMARQUES
1	97513–08545	BOLT, WITH WASHER VIS HEXAGONAL AVC RONDELLE	3	3	3	3		
2	90179–08003	NUT ECROU	1	1	1	1		
3	97985–04308	SCREW, WITH WASHER VIS, AVEC RONDELLE	1	1	1	1		
4	6CB–81822–02	BRACKET, STARTING MOTOR SUPPORT, DEMARREUR ELECTRIQUE	1	1	1	1		
5	90105–08M87	BOLT, FLANGE BOULON, A COLLERETTE	2	2	2	2		
6	6CB–81443–00	CLAMP, LEAD 1 BRIDE, FIL 1	1	1	1	1		
7	95D95–06016	BOLT, FLANGE DEEP RECESS BOULON FIXATION	1	1	1	1		
8	6CB–81823–B0	STAY, STARTING MOTOR SUPPORT	1	1	1	1		
9	90105–06151	BOLT, FLANGE BOULON, A COLLERETTE	1	1	1	1		
10	90464–13227	CLAMP BRIDE	1	1	1	1		
11	90464–18004	CLAMP BRIDE	1	1	1	1		
12	6CE–8259M–01	WIRE HARNESS ASSY 2 FAISCEAU DE FILS	1	1	1	1		
13	6KW–81949–00	WIRE, LEAD (ISOLATOR, 3.8M) FIL (ISOLATOR, 3.8M)	1	1	1	1		AP AP

FIG. 23 ELECTRICAL 6 — PARTIE ELECTRIQUE 6

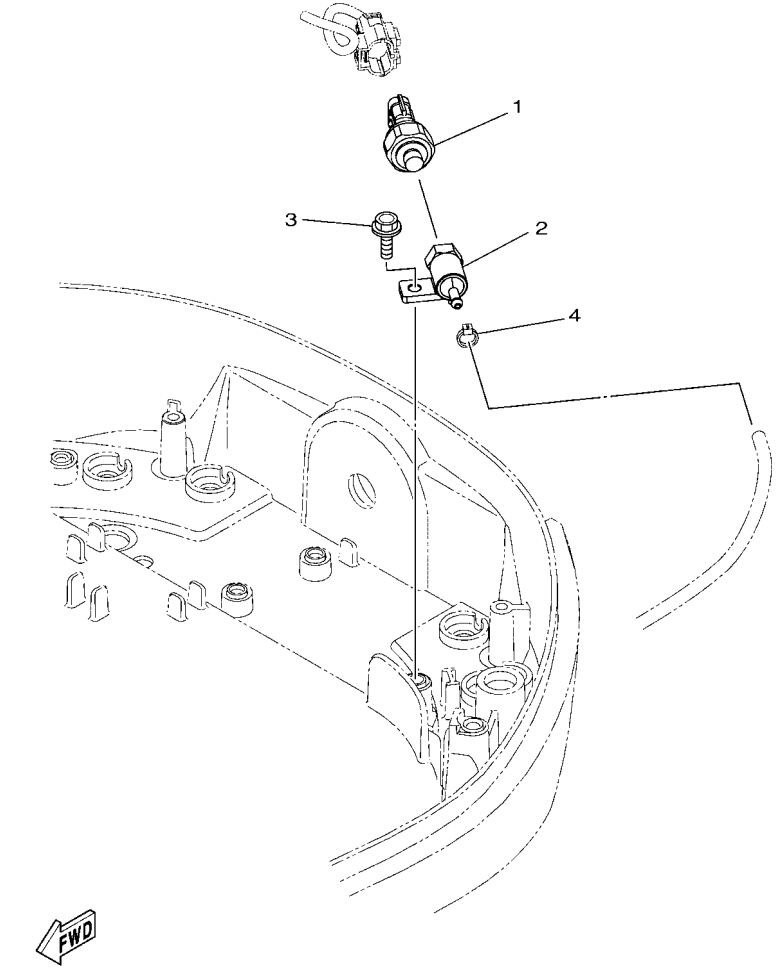

REF. NO.	PART NO. N° PIECES	DESCRIPTION DESCRIPTION	XCB	XCB2	NCB	NCB2		REMARKS REMARQUES
1	6AW–8366B–10	SENSOR, WATER PRESSURE SONDE DE PRESSION D'EAU	1	1				FOR LAN SPEED FOR LAN SPEED
2	60V–8366D–00	ADAPTOR, INPUT CONNECTEUR 3	1	1				FOR LAN SPEED FOR LAN SPEED
3	95D95–06016	BOLT, FLANGE DEEP RECESS BOULON FIXATION	1	1				FOR LAN SPEED FOR LAN SPEED
4	90465–11M10	CLAMP BRIDE	1	1				FOR LAN SPEED FOR LAN SPEED

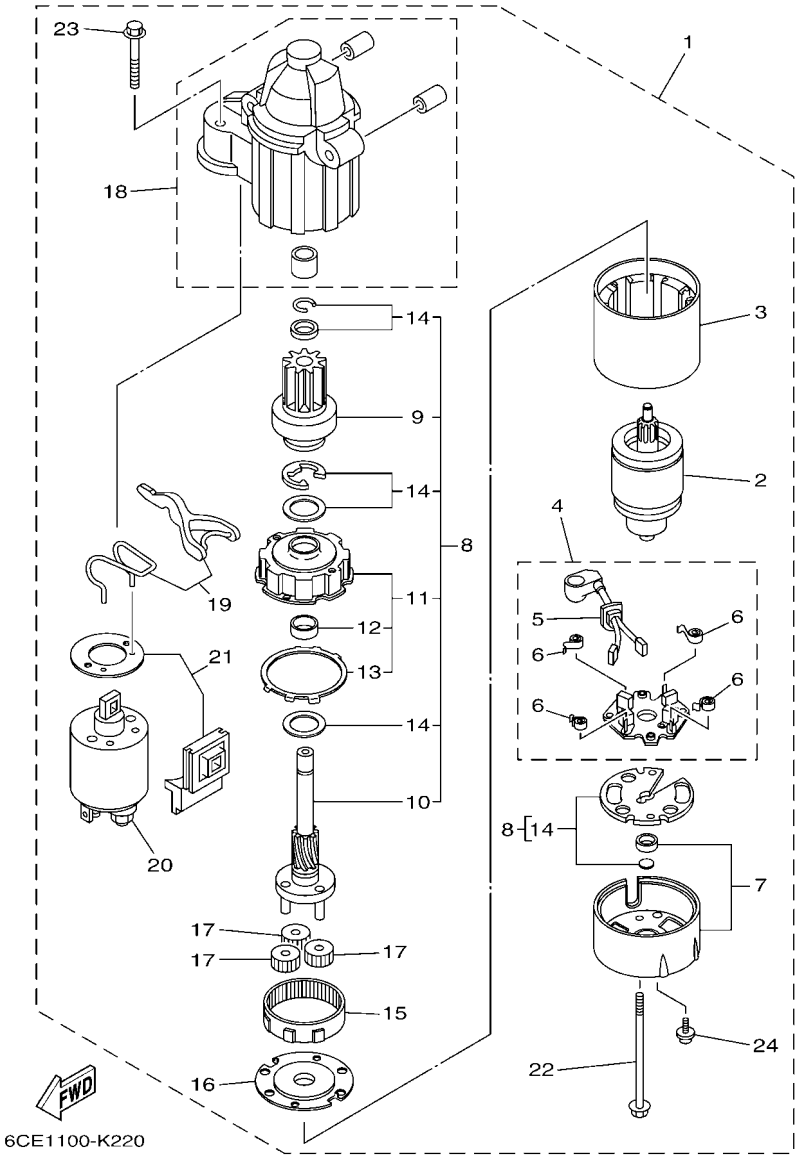

FIG. 24 STARTING MOTOR — DEMARREUR ELECTRIQUE

REF. NO.	PART NO. N° PIECES	DESCRIPTION DESCRIPTION	XCB	XCB2	NCB	NCB2		REMARKS REMARQUES
1	6CE–81800–02	STARTING MOTOR ASSY DEMARREUR ELECTRIQUE COMPLET	1	1	1	1		
2	6CE–81850–00	.ARMATURE ASSY .INDUIT	1	1	1	1		
3	6CE–81810–00	.STATOR ASSY .STATOR COMPLET	1	1	1	1		
4	6CE–81840–01	.BRUSH HOLDER ASSY .SUPPORT DE CHARBON	1	1	1	1		
5	6CE–81801–01	..BRUSH SET ..JEU DE BROSSE	1	1	1	1		
6	67F–81813–00	..SPRING, BRUSH ..RESSORT, DE CHARBON	4	4	4	4		
7	6CE–81820–00	.REAR BRACKET ASSY .SUPPORT ARRIERE COMPLET	1	1	1	1		
8	6CE–81807–00	.GEAR ASSY, STARTING MOTOR .PIGNON, DEMARREUR ELECTRIQUE	1	1	1	1		
9	6CB–81832–00	..CLUTCH, OVER RUN ..EMBRAYAGE, ROUE LIBRE	1	1	1	1		
10	6CB–81836–00	..SHAFT, PINION ..AXE, PIGNON	1	1	1	1		
11	6CE–81821–00	..BRACKET, CENTER 1 ..SUPPORT, CENTRE 1	1	1	1	1		
12	67F–81841–00	...BEARING ...ROULEMENT	1	1	1	1		
13	67F–8183R–00	...GASKET ...JOINT	1	1	1	1		
14	6CB–81809–00	..WASHER KIT ..JEU DE RONDELLES	1	1	1	1		
15	67F–81891–00	.GEAR, RING .ROUE DENTEE	1	1	1	1		WITH 67F-8183R-00 WITH 67F-8183R-00
16	6CE–81830–00	.BRACKET, CENTER 2 .SUPPORT, CENTRE 2	1	1	1	1		
17	60V–8183T–00	.GEAR, IDLER .PIGNON, INTERMEDIAIRE	3	3	3	3		
18	6CE–81842–00	.COVER .COUVERCLE	1	1	1	1		
19	6CE–81839–00	.LEVER ASSY .LEVIER COMPLET	1	1	1	1		
20	6C5–81941–01	.STARTER RELAY ASSY .LANCEUR RELAIS (ENS.)	1	1	1	1		
21	6CE–81869–00	.COVER, DUST .COUVERCLE, POUSSIERE	1	1	1	1		
22	6CB–81826–00	.BOLT .BOULON	2	2	2	2		
23	69J–81828–00	.BOLT 2 .BOULON 2	2	2	2	2		
24	67F–81846–00	.SCREW .VIS	2	2	2	2		

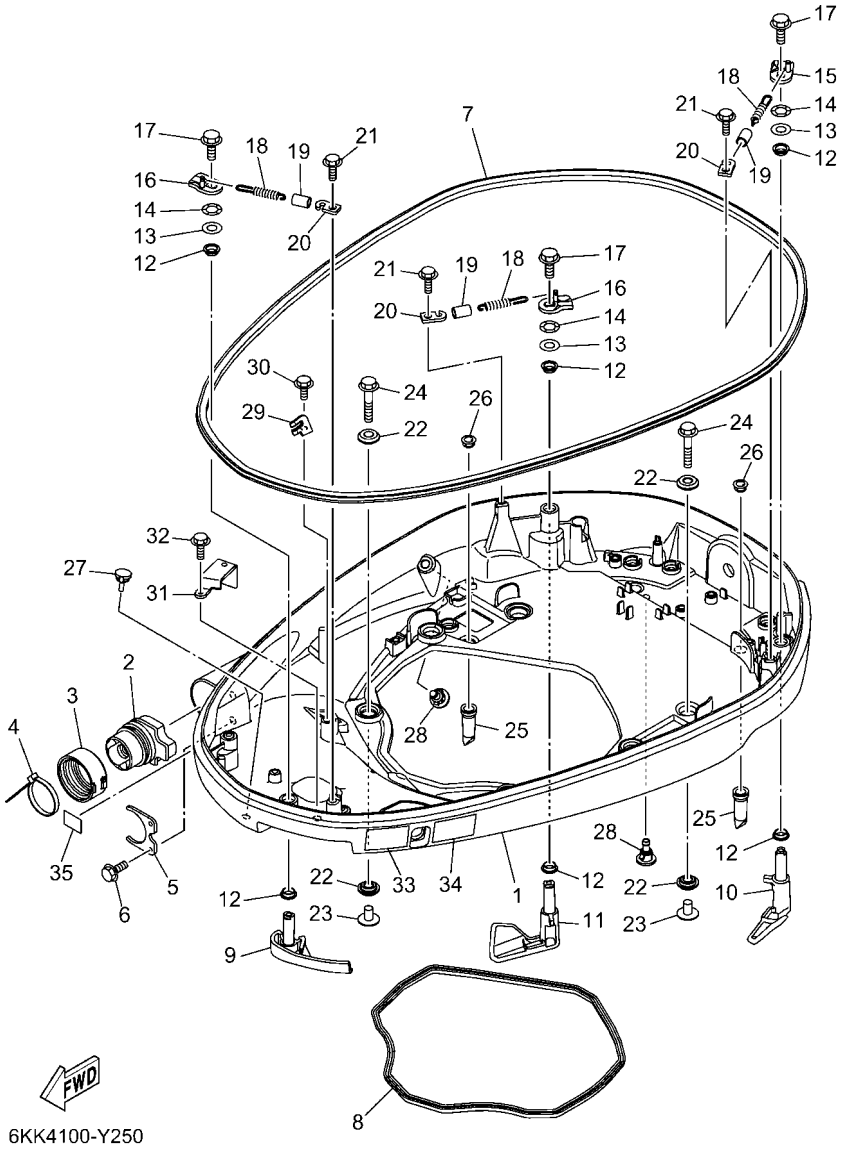

FIG. 25 BOTTOM COWLING 1 — CAPOT INFERIEUR 1

REF. NO.	PART NO. N° PIECES	DESCRIPTION DESCRIPTION	XCB	XCB2	NCB	NCB2		REMARKS REMARQUES
1	6KA–42710–00–8D	BOTTOM COWLING ASSY ENS. EMBASE	1		1			GRAY GRAY
	6KA–42710–00–CE	BOTTOM COWLING ASSY ENS. EMBASE		1		1		WHITE WHITE
2	6KA–42725–01	GROMMET PASSE-FIL	1	1	1	1		
3	68F–42753–00	FASTNER ATTACHE	1	1	1	1		AP AP
4	90464–20258	CLAMP BRIDE	1	1	1	1		AP AP
5	6CB–42761–00	STOPPER PLAQUETTE	1	1	1	1		
6	95D95–06014	BOLT, FLANGE DEEP RECESS BOULON FIXATION	2	2	2	2		
7	6KA–42615–20	SEAL JOINT	1	1	1	1		
8	6CB–42716–01	RUBBER SEAL 1 JOINT EN CAOUTCHOUC 1	1	1	1	1		
9	6KA–42815–00–8D	LEVER, CLAMP 1 LEVIER, PRESSE 1	1		1			GRAY GRAY
	6KA–42815–00–CE	LEVER, CLAMP 1 LEVIER, PRESSE 1		1		1		WHITE WHITE
10	6KA–42816–00–8D	LEVER, CLAMP 2 LEVIER, PRESSE 2	1		1			GRAY GRAY
	6KA–42816–00–CE	LEVER, CLAMP 2 LEVIER, PRESSE 2		1		1		WHITE WHITE
11	6KA–42817–00–8D	LEVER, CLAMP 3 LEVIER, PRESSE 3	1		1			GRAY GRAY
	6KA–42817–00–CE	LEVER, CLAMP 3 LEVIER, PRESSE 3		1		1		WHITE WHITE
12	90386–15M73	BUSH DOUILLE	6	6	6	6		
13	90201–156J2	WASHER, PLATE RONDELLE, PLATE	3	3	3	3		
14	90206–15M18	WASHER, WAVE RONDELLE, ONDULEE	3	3	3	3		
15	6CB–42818–00	LEVER, CLAMP 4 LEVIER, PRESSE 4	1	1	1	1		
16	6CB–42819–00	LEVER, CLAMP 5 LEVIER, PRESSE 5	2	2	2	2		
17	95D95–08012	BOLT, FLANGE DEEP RECESS BOULON FIXATION	3	3	3	3		
18	90506–22001	SPRING, TENSION RESSORT, TENSION	3	3	3	3		
19	90445–15M03	HOSE (L23) DURITE (L23)	3	3	3	3		
20	66T–43144–00	HOOK, SPRING CROCHET	3	3	3	3		
21	95D95–06012	BOLT, FLANGE DEEP RECESS BOULON FIXATION	3	3	3	3		
22	90480–22M81	GROMMET PASSE-FIL	12	12	12	12		
23	90387–08M37	COLLAR COLLERETTE	6	6	6	6		

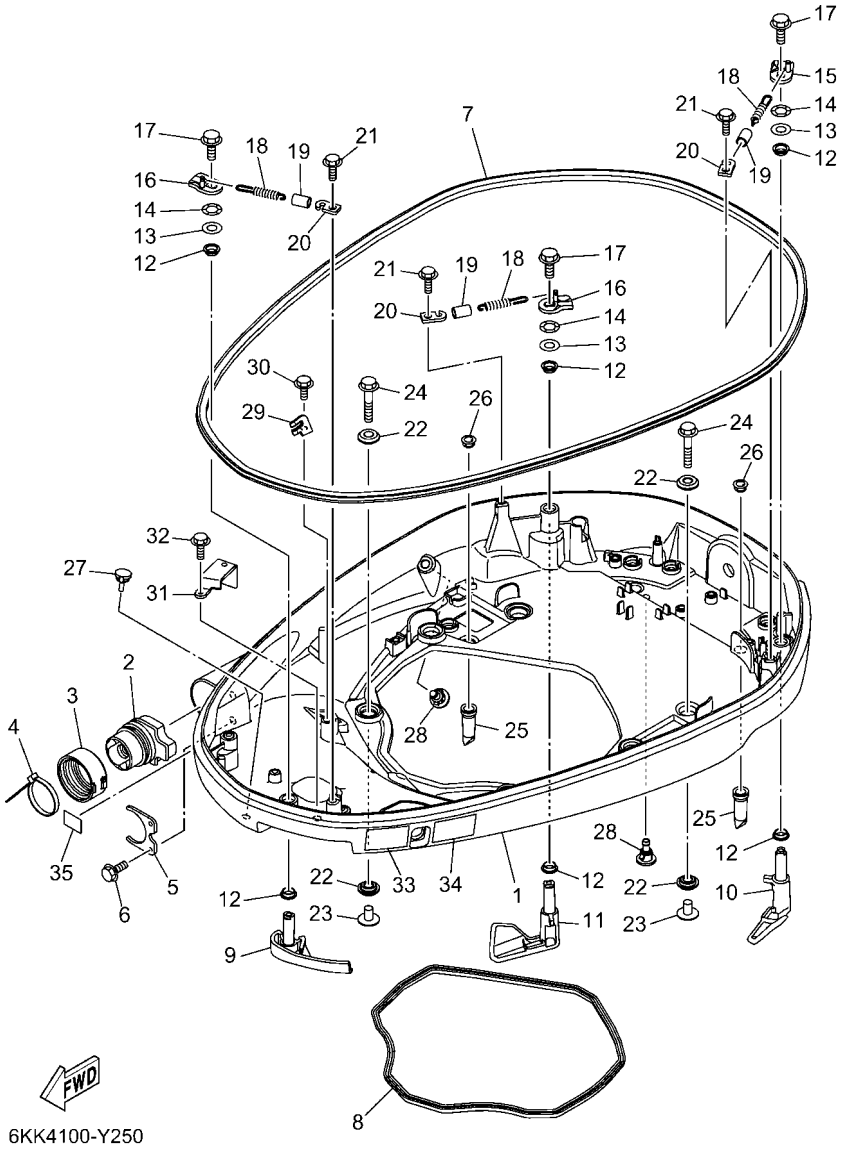

FIG. 25 BOTTOM COWLING 1 — CAPOT INFERIEUR 1

REF. NO.	PART NO. N° PIECES	DESCRIPTION DESCRIPTION	XCB	XCB2	NCB	NCB2		REMARKS REMARQUES
24	90119–08187	BOLT, WITH WASHER BOULON, AVEC RONDELLE	6	6	6	6		
25	6DA–42717–01	RUBBER, SEAL 2 JOINT EN CAOUTCHOUC 2	4	4	4	4		
26	6DA–42384–00	SEAL, CAP JOINT, CAPUCHON	4	4	4	4		
27	6H4–42748–01	GROMMET PASSE-FIL	1	1	1	1		
28	6P2–44391–00	NIPPLE, HOSE RACCORD D'ESSENCE	2	2	2	2		
29	6ML–42766–00	BRACKET 2 SUPPORT 2	1	1	1	1		
30	95D95–06012	BOLT, FLANGE DEEP RECESS BOULON FIXATION	1	1	1	1		
31	6CB–42756–00	STAY, CLAMP SUPPORT, COLLIER	1	1	1	1		
32	95D95–06012	BOLT, FLANGE DEEP RECESS BOULON FIXATION	1	1	1	1		
33	6EE–42794–41	LABEL, WARNING (GENERAL) ETIQUETTE, AVERTISSEMENT	1	1	1	1		
34	6EE–42794–51	LABEL, WARNING (GENERAL) ETIQUETTE, AVERTISSEMENT	1	1	1	1		
35	6AH–81996–01	MARK MARQUE	1	1	1	1		

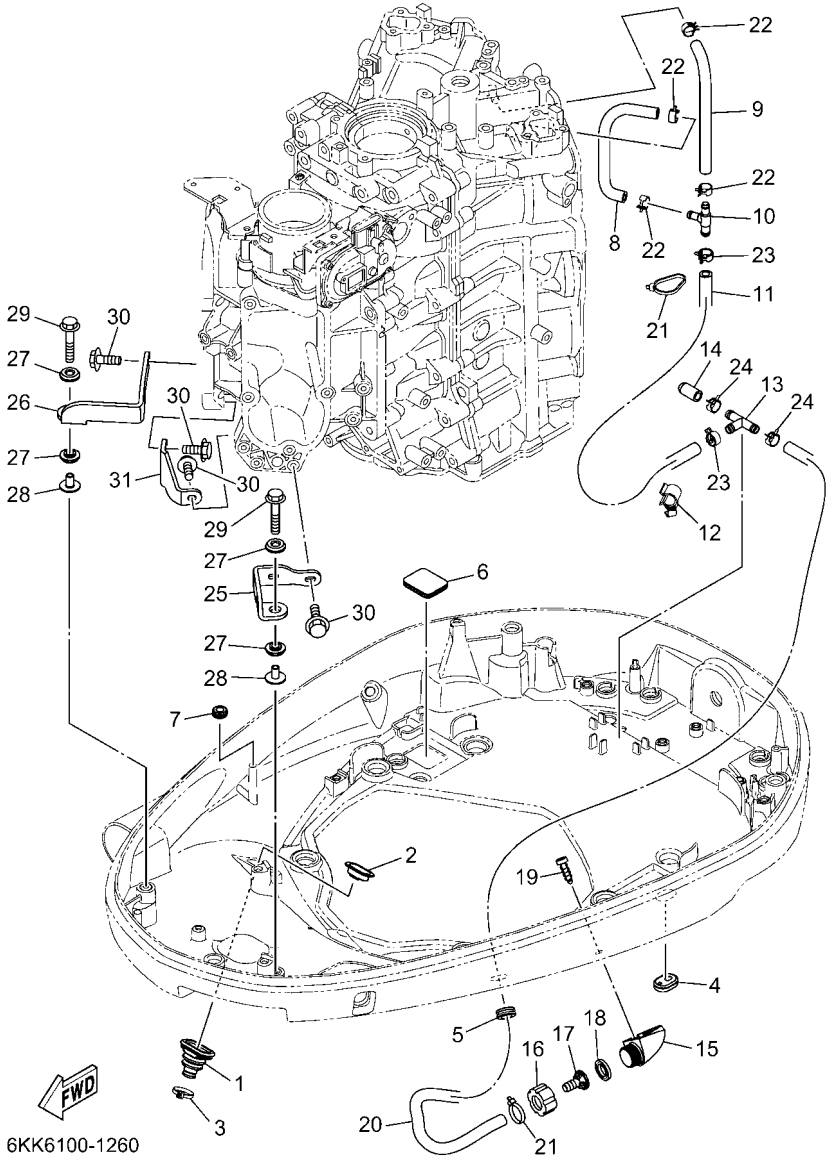

FIG. 26 BOTTOM COWLING 2 — CAPOT INFERIEUR 2

REF. NO.	PART NO. N° PIECES	DESCRIPTION DESCRIPTION	XCB	XCB2	NCB	NCB2		REMARKS REMARQUES
1	6BG–42724–01	GROMMET PASSE-FIL	1	1	1	1		
2	6BG–42384–00	SEAL, CAP JOINT, CAPUCHON	1	1	1	1		
3	90465–11M10	CLAMP BRIDE	1	1	1	1		
4	6KA–42727–00	GROMMET PASSE-FIL	1	1	1	1		
5	90480–19031	GROMMET PASSE-FIL	1	1	1	1		
6	6KF–43885–00	GROMMET PASSE-FIL	1	1	1	1		
7	90480–13163	GROMMET PASSE-FIL	1	1	1	1		
8	6CB–24315–00	PIPE 5 DURITE 5	1	1	1	1		
9	90445–14021	HOSE (L185) DURITE (L185)	1	1	1	1		
10	6AW–42169–00	JOINT AXE	1	1	1	1		
11	6KA–13582–00	PIPE DURITE	1	1	1	1		
12	90464–16017	CLAMP BRIDE	1	1	1	1		
13	90413–10001	WAY 3 RAINURE 3	1	1	1	1		
14	6KA–13587–00	CAP, JOINT JOINT DE COUVERCLE	1	1	1	1		
15	6AW–12572–00	ADAPTER ADAPTATEUR	1	1	1	1		
16	6R3–12581–10	JOINT, HOSE 1 JOINT DE TUYAU	1	1	1	1		
17	6AW–12582–00	JOINT, HOSE 2 RACCORD DE TUYAU 1	1	1	1	1		
18	6R3–12583–10	GASKET, HOSE JOINT JOINT	1	1	1	1		
19	97780–60520	SCREW, TAPPING VIS, TETE BOMBEE	2	2	2	2		
20	6KA–42541–00	PIPE 1 TUYAU 1	1	1	1	1		
21	90465–11M10	CLAMP BRIDE	2	2	2	2		
22	90467–130A5	CLIP JONC	4	4	4	4		
23	90467–140A8	CLIP JONC	2	2	2	2		
24	90467–140A9	CLIP JONC	2	2	2	2		
25	6CB–42643–00	PLATE, CLAMP PLAQUE, PRESSE	1	1	1	1		
26	6CB–42644–00	PLATE, CLAMP 2 PLAQUE, PRESSE 2	1	1	1	1		
27	90480–14029	GROMMET PASSE-FIL	4	4	4	4		

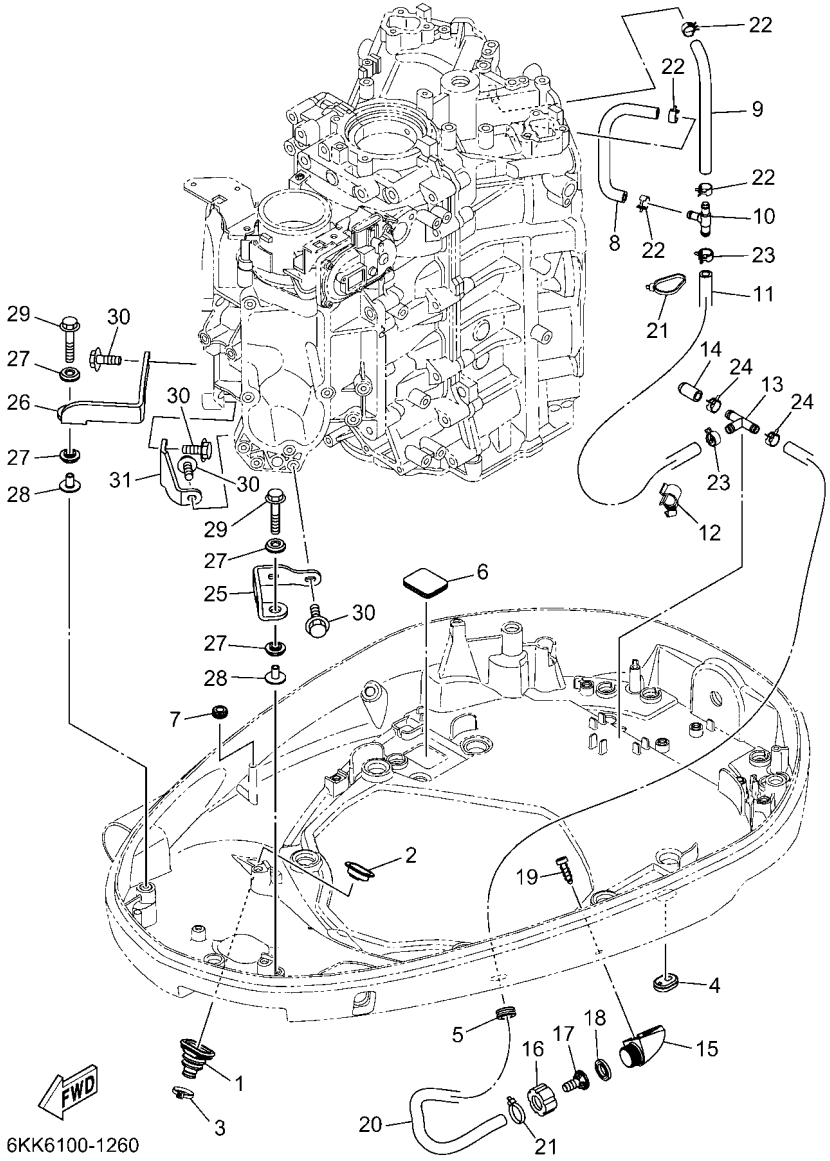

FIG. 26 BOTTOM COWLING 2 — CAPOT INFERIEUR 2

REF. NO.	PART NO. N° PIECES	DESCRIPTION DESCRIPTION	XCB	XCB2	NCB	NCB2		REMARKS REMARQUES
28	90387–06M03	COLLAR COLLERETTE	2	2	2	2		
29	90119–06291	BOLT, WITH WASHER BOULON, AVEC RONDELLE	2	2	2	2		
30	90105–06039	BOLT, FLANGE BOULON, A COLLERETTE	6	6	6	6		
31	6CB–42744–00	STAY SUPPORT	1	1	1	1		

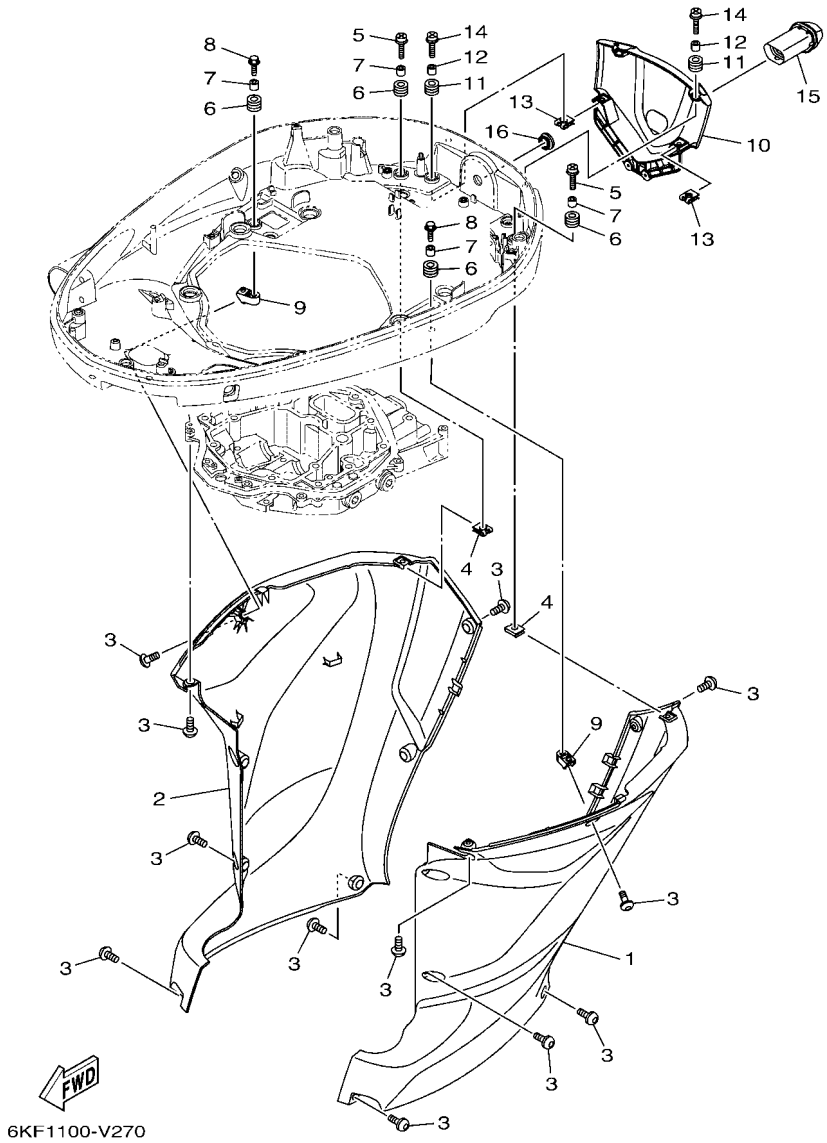

FIG. 27 BOTTOM COWLING 3 — CAPOT INFERIEUR 3

REF. NO.	PART NO. N° PIECES	DESCRIPTION DESCRIPTION	XCB	XCB2	NCB	NCB2		REMARKS REMARQUES
1	6KF–42740–00–8D	APRON COMPLETE 1 CAPOT LATERAL COMPLETE 1	1		1			GRAY GRAY
	6KF–42740–00–CE	APRON COMPLETE 1 CAPOT LATERAL COMPLETE 1		1		1		WHITE WHITE
2	6KF–42770–00–8D	APRON COMPLETE 2 CAPOT LATERAL COMPLETE 2	1		1			GRAY GRAY
	6KF–42770–00–CE	APRON COMPLETE 2 CAPOT LATERAL COMPLETE 2		1		1		WHITE WHITE
3	90111–06144	BOLT, HEXAGON SOCKET BUTTON BOULON	16	16	16	16		
4	90183–061A8	NUT, SPRING ECROU, RESSORT	2	2	2	2		
5	90159–06053	SCREW, WITH WASHER VIS, AVEC RONDELLE	2	2	2	2		
6	90480–13M24	GROMMET PASSE-FIL	4	4	4	4		
7	90387–06M43	COLLAR COLLERETTE	4	4	4	4		
8	90109–06M80	BOLT BOULON	2	2	2	2		
9	6CE–42774–B0	STAY, APRON 1 COUSSINET	2	2	2	2		
10	6KA–42723–00–8D	COVER, BOTTOM COUVERCLE	1		1			GRAY GRAY
	6KA–42723–00–CE	COVER, BOTTOM COUVERCLE		1		1		WHITE WHITE
11	90480–13M24	GROMMET PASSE-FIL	4	4	4	4		
12	90387–06M43	COLLAR COLLERETTE	4	4	4	4		
13	90183–061A8	NUT, SPRING ECROU, RESSORT	2	2	2	2		
14	90159–06053	SCREW, WITH WASHER VIS, AVEC RONDELLE	4	4	4	4		
15	6KA–42769–00	SEAL, RUBBER BOURRELET, CAOUTCHOUC	1	1	1	1		
16	676–42726–00	GROMMET PASSE-FIL	1	1	1	1		

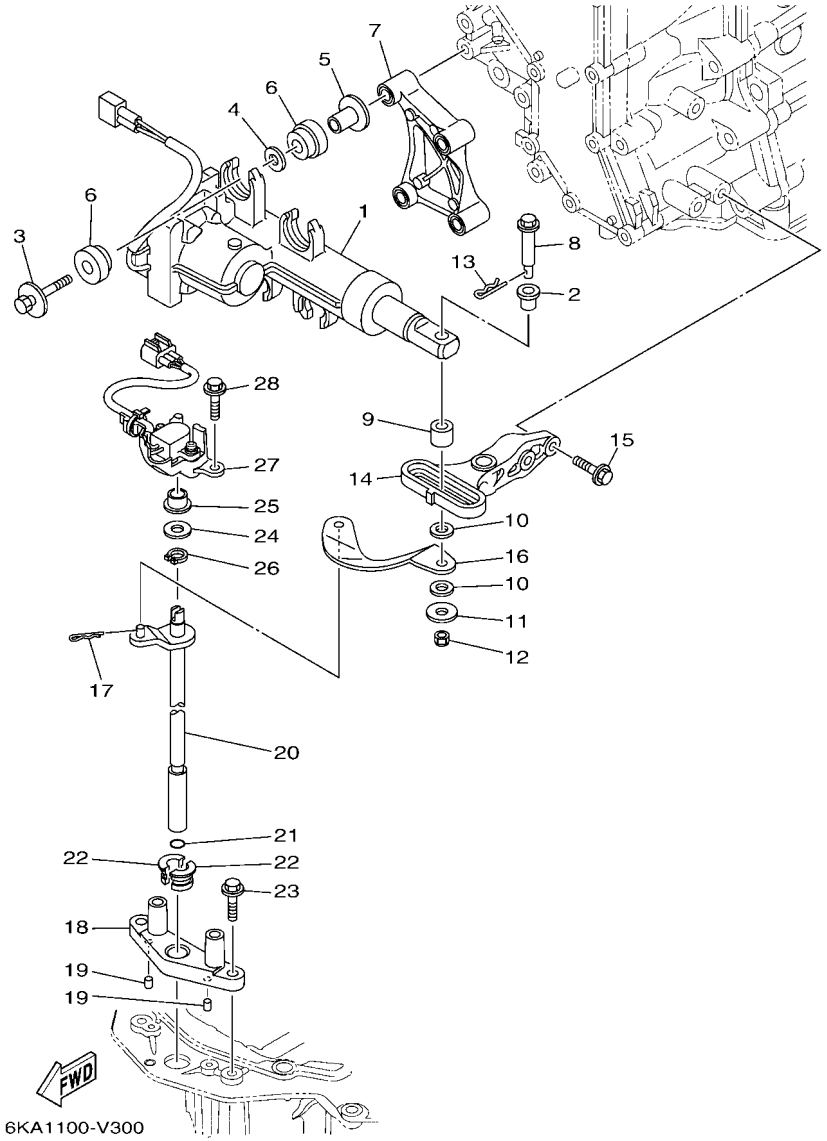

FIG. 28 CONTROL — COMMANDE

REF. NO.	PART NO. N° PIECES	DESCRIPTION DESCRIPTION	XCB	XCB2	NCB	NCB2		REMARKS REMARQUES
1	6ML–4820A–00	ACTUATOR UNIT ACTUATOR UNIT	1	1	1	1		
2	90386–08008	BUSH DOUILLE	1	1	1	1		
3	90119–08168	BOLT, WITH WASHER BOULON, AVEC RONDELLE	4	4	4	4		
4	90201–12064	WASHER, PLATE RONDELLE, PLATE	4	4	4	4		
5	90387–08104	COLLAR COLLERETTE	4	4	4	4		
6	6CE–85564–00	GROMMET RONDELLE CAOUTCHOUC	8	8	8	8		
7	6CE–44142–20	JOINT AXE	1	1	1	1		
8	6CE–42195–10	PIN, JOINT 1 GOUPILLE	1	1	1	1		
9	6CE–44122–20	BUSHING, SHIFT ROD LEVER DOUILLE, LEVIER D'EMBRAYAGE	1	1	1	1		
10	90202–08M41	WASHER, PLATE RONDELLE, PLATE	2	2	2	2		
11	90201–06068	WASHER, PLATE RONDELLE, PLATE	1	1	1	1		
12	90185–06M07	NUT, SELF-LOCKING ECROU,AUTO-BLOQUANT	1	1	1	1		
13	90468–18008	CLIP JONC	1	1	1	1		
14	6CE–44117–10	BRACKET SUPPORT	1	1	1	1		
15	97E75–06525	BOLT, HEXAGON W/W DEEP RECESS VIS HEXAGONAL AVC RONDELLE	2	2	2	2		
16	6CE–44121–10	LEVER, SHIFT ROD LEVIER, TIGE D'INVERSION	1	1	1	1		
17	90468–18008	CLIP JONC	1	1	1	1		
18	6CE–44118–A0	BRACKET SUPPORT	1	1	1	1		
19	93604–07M13	PIN, DOWEL CLAVETTE	2	2	2	2		
20	6JD–44120–01	HANDLE GEAR SHIFT ASSY LEVIER D'EMBRAYAGE	1	1	1	1		
21	93210–09165	O-RING JOINT TORIQUE	1	1	1	1		
22	90386–11001	BUSH DOUILLE	2	2	2	2		
23	95D75–06025	BOLT, FLANGE DEEP RECESS BOULON FIXATION	2	2	2	2		
24	90201–11008	WASHER, PLATE RONDELLE, PLATE	1	1	1	1		
25	90386–10001	BUSH DOUILLE	1	1	1	1		
26	93410–10082	CIRCLIP CIRCLIP	1	1	1	1		
27	6CE–68303–00	SENSOR ASSY SONDE (ENS.)	1	1	1	1		

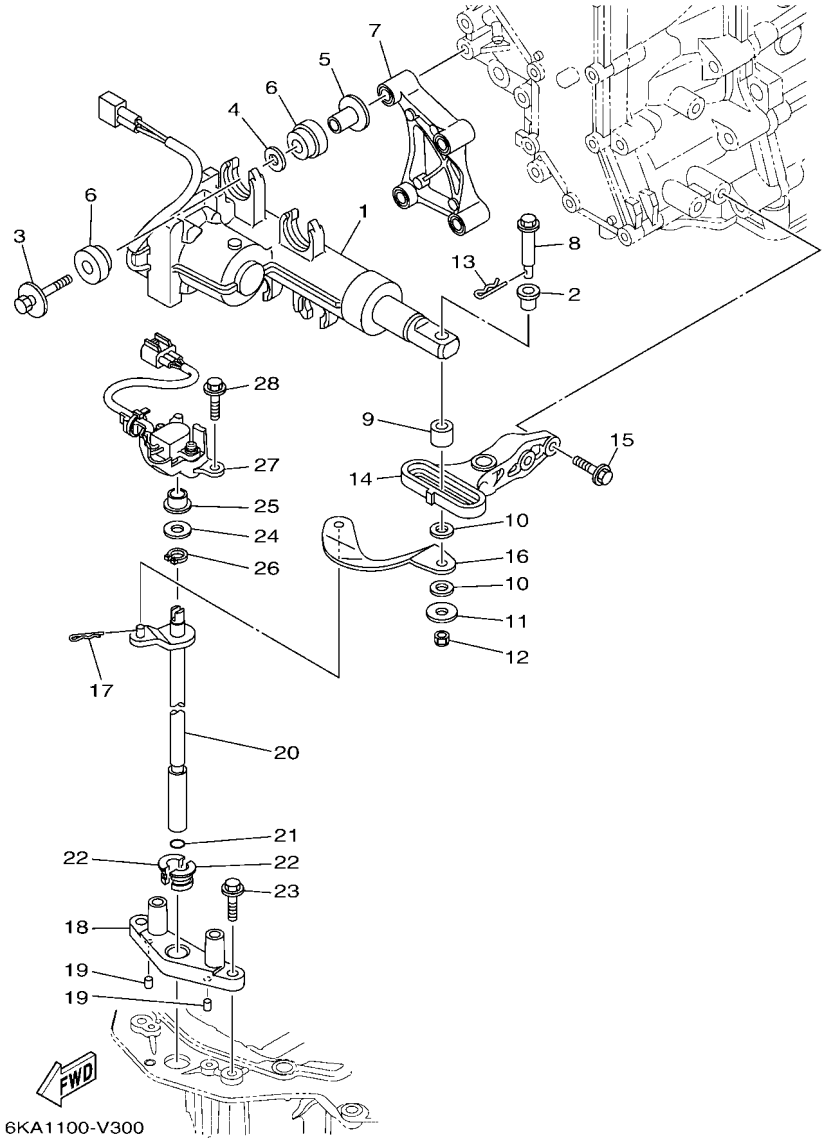

FIG. 28 CONTROL — COMMANDE

REF. NO.	PART NO. N° PIECES	DESCRIPTION DESCRIPTION	XCB	XCB2	NCB	NCB2		REMARKS REMARQUES
28	95D75–06025	BOLT, FLANGE DEEP RECESS BOULON FIXATION	2	2	2	2		

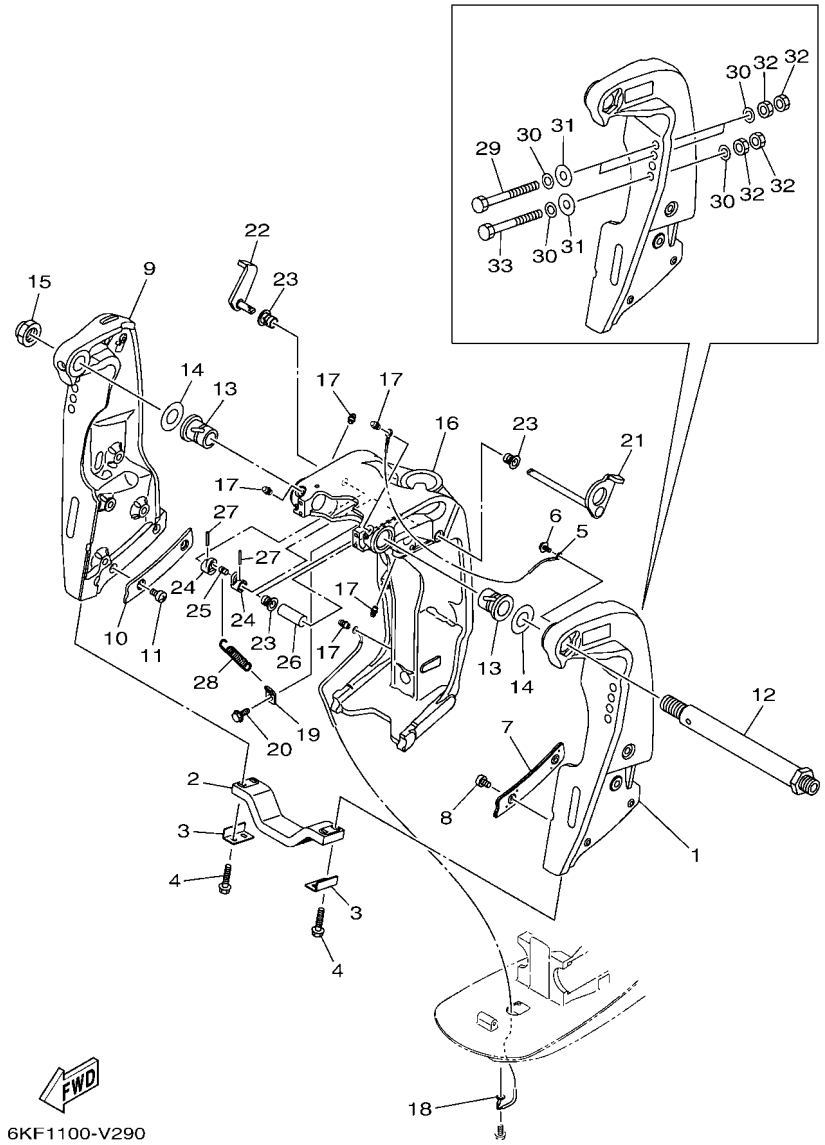

FIG. 29 BRACKET 1 — SUPPORT 1

REF. NO.	PART NO. N° PIECES	DESCRIPTION DESCRIPTION	XCB	XCB2	NCB	NCB2		REMARKS REMARQUES
1	69J–43111–03–8D	BRACKET, CLAMP 1 PRESSE 1	1		1			GRAY GRAY
	69J–43111–03–CE	BRACKET, CLAMP 1 PRESSE 1		1		1		WHITE WHITE
2	6G5–45251–02	ANODE ANODE	1	1	1	1		
3	6G5–44526–00	PLATE PLAQUE	2	2	2	2		
4	97E95–06525	BOLT, HEXAGON W/W DEEP RECESS VIS HEXAGONAL AVC RONDELLE	4	4	4	4		
5	6E5–82148–00	WIRE, LEAD 4 FIL 4	1	1	1	1		
6	97985–06212	SCREW, WITH WASHER VIS, AVEC RONDELLE	1	1	1	1		
7	61A–43132–01	WASHER, FRICTION RONDELLE, FRICTION	1	1	1	1		
8	97885–06010	SCREW, PAN HEAD VIS, A ENCOCHE	2	2	2	2		
9	69J–43112–03–8D	BRACKET, CLAMP 2 PRESSE 2	1		1			GRAY GRAY
	69J–43112–03–CE	BRACKET, CLAMP 2 PRESSE 2		1		1		WHITE WHITE
10	61A–43133–01	WASHER,FRICTION RONDELLE	1	1	1	1		
11	97885–06010	SCREW, PAN HEAD VIS, A ENCOCHE	2	2	2	2		
12	6R3–43131–00	BOLT, CLAMP BRACKET BOULON, PRESSE	1	1	1	1		
13	90386–25M31	BUSH DOUILLE	2	2	2	2		
14	90201–26M59	WASHER, PLATE RONDELLE, PLATE	2	2	2	2		
15	90185–22M11	NUT, SELF-LOCKING ECROU,AUTO-BLOQUANT	1	1	1	1		
16	6KF–43311–00–8D	BRACKET, SWIVEL 1 SUPPORT, PIVOT 1	1		1			GRAY GRAY
	6KF–43311–00–CE	BRACKET, SWIVEL 1 SUPPORT, PIVOT 1		1		1		WHITE WHITE
17	93700–06002	NIPPLE, GREASE PION	7	7	7	7		
18	6KA–82147–00	WIRE, LEAD 5 FIL 5	1	1	1	1		
19	6G5–43144–00	HOOK, SPRING CROCHET	1	1	1	1		
20	97E95–06512	BOLT, HEXAGON W/W DEEP RECESS VIS HEXAGONAL AVC RONDELLE	1	1	1	1		
21	61A–43181–01	LEVER, TILT STOP 1 LEVIER VERROUILLAGE RELEVAGE 1	1	1	1	1		
22	6G5–43185–02	LEVER, TILT STOP 2 LEVIER VERROUILLAGE RELEVAGE 2	1	1	1	1		
23	90386–10M16	BUSH DOUILLE	3	3	3	3		
24	6G5–43148–00	COLLAR, DISTANCE ENTRETOISE	2	2	2	2		

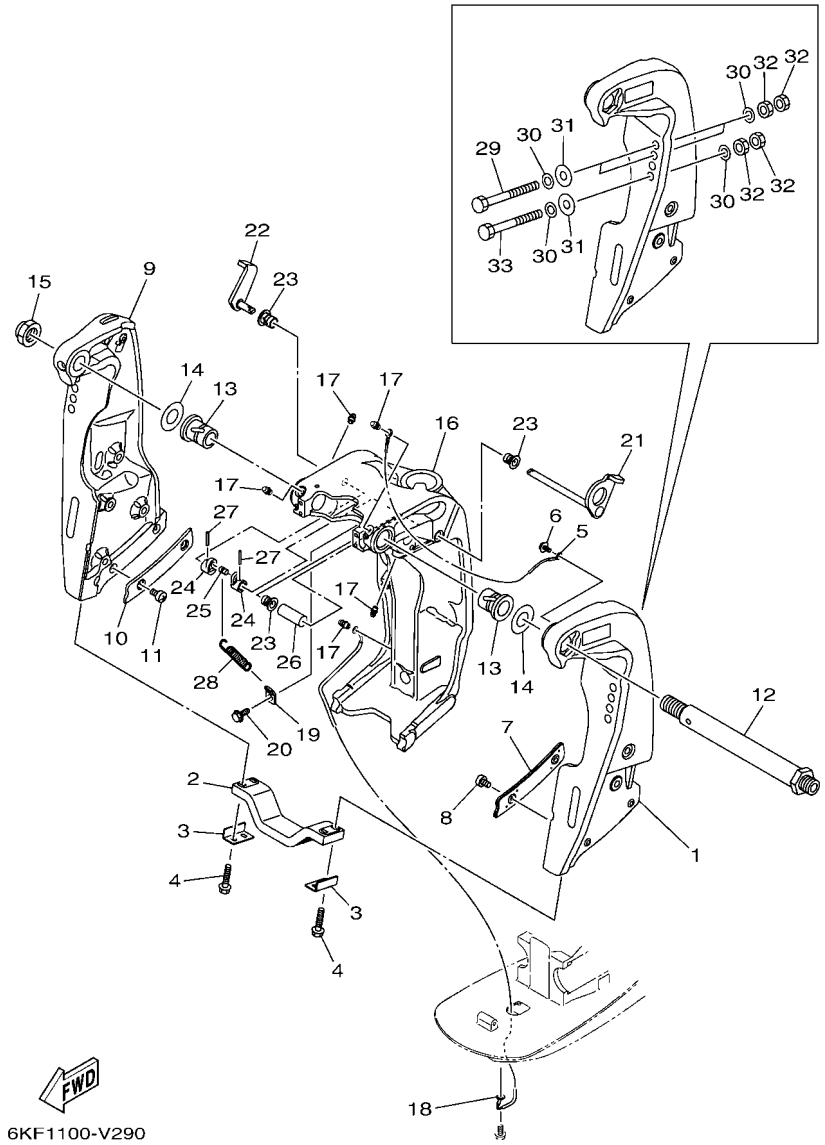

FIG. 29 BRACKET 1 — SUPPORT 1

REF. NO.	PART NO. N° PIECES	DESCRIPTION DESCRIPTION	XCB	XCB2	NCB	NCB2		REMARKS REMARQUES
25	90249–06M19	PIN GOUPILLE	1	1	1	1		
26	90387–10M05	COLLAR COLLERETTE	1	1	1	1		
27	91690–30020	PIN, SPRING AGRAFFE	2	2	2	2		
28	90506–16003	SPRING, TENSION RESSORT, TENSION	1	1	1	1		
29	90101–12065	BOLT (L:130MM) BOULON (L:130MM)	2	2	2	2		
30	90201–13M01	WASHER, PLATE RONDELLE, PLATE	8	8	8	8		
31	90201–12426	WASHER, PLATE RONDELLE, PLATE	4	4	4	4		
32	95380–12600	NUT ECROU	8	8	8	8		
33	90101–12066	BOLT (L:150MM) BOULON (L:150MM)	2	2	2	2		

FIG. 30 BRACKET 2 SUPPORT 2

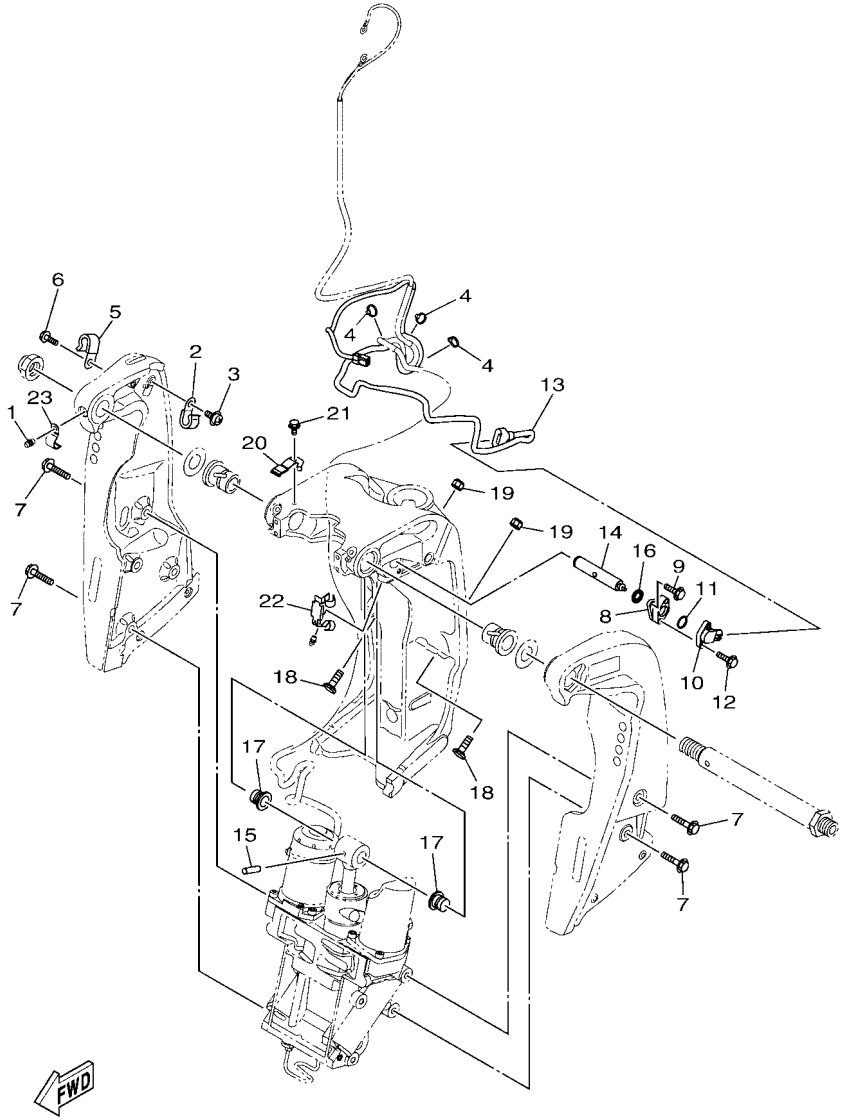

6KK2100-W300

REF. NO.	PART NO. N° PIECES	DESCRIPTION DESCRIPTION	XCB	XCB2	NCB	NCB2		REMARKS REMARQUES
1	93700–06002	NIPPLE, GREASE PION	1	1	1	1		
2	90465–08M83	CLAMP BRIDE	1	1	1	1		
3	97985–06212	SCREW, WITH WASHER VIS, AVEC RONDELLE	1	1	1	1		
4	90465–11M10	CLAMP BRIDE	3	3	3	3		
5	90465–08M83	CLAMP BRIDE	1	1	1	1		
6	97585–06510	BOLT, WITH WASHER VIS HEXAGONAL AVC RONDELLE	1	1	1	1		
7	90119–10024	BOLT, WITH WASHER BOULON, AVEC RONDELLE	8	8	8	8		
8	6KA–4382A–00	ADAPTOR 1 ADAPTEUR 1	1	1	1	1		
9	97595–05516	BOLT, WITH WASHER VIS HEXAGONAL AVC RONDELLE	2	2	2	2		
10	6GR–85887–00	SENSOR, ANGLE CAPTEUR DE COUPLE	1	1	1	1		
11	93210–17MF9	O-RING JOINT TORIQUE	1	1	1	1		
12	97595–05516	BOLT, WITH WASHER VIS HEXAGONAL AVC RONDELLE	2	2	2	2		
13	6KF–82553–00	EXTENSION, WIRE LEAD EXTENSION, FAISCEAU	1	1	1	1		
14	6KA–43126–00	PIN, UPPER SHOCK MOUNT AXE, SUPERIEUR AMORTISSEUR	1	1	1	1		
15	91690–60022	PIN, SPRING AGRAFFE	1	1	1	1		
16	93210–06ME6	O-RING JOINT TORIQUE	1	1	1	1		
17	90386–18M14	BUSH DOUILLE	2	2	2	2		
18	6AW–43376–00	BOLT, THRUST RECEIVER BOULON	2	2	2	2		
19	95780–10300	NUT, FLANGE ECROU	2	2	2	2		
20	6KF–42829–00	PLATE, CLAMP 2 PLAQUE, PRESSE 2	1	1	1	1		
21	97585–06510	BOLT, WITH WASHER VIS HEXAGONAL AVC RONDELLE	1	1	1	1		
22	6KF–42828–00	PLATE, CLAMP PLAQUE, PRESSE	1	1	1	1		
23	90462–08104	CLAMP BRIDE	1	1	1	1		

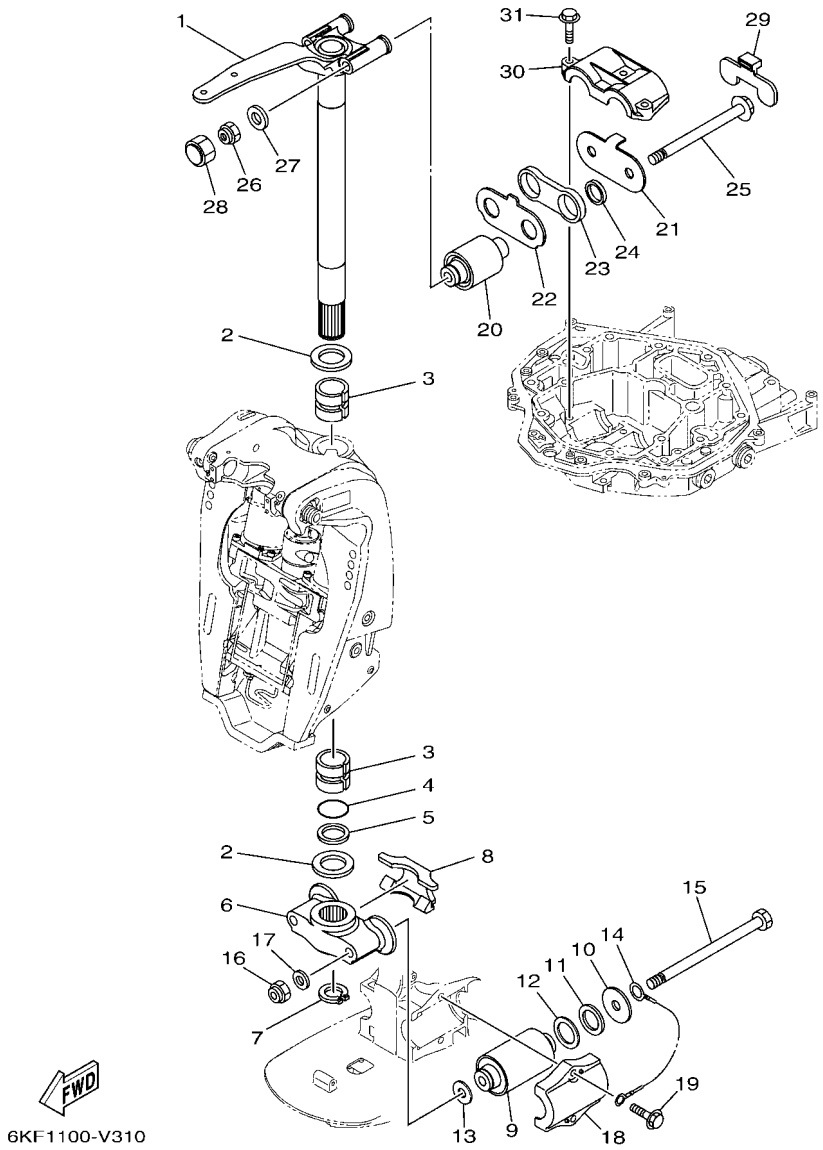

FIG. 31 BRACKET 3 — SUPPORT 3

REF. NO.	PART NO. N° PIECES	DESCRIPTION DESCRIPTION	XCB	XCB2	NCB	NCB2		REMARKS REMARQUES
1	6CE–42510–00–8D	STEERING BRACKET ASSY DIRECTION SUPPORT (ENS.)	1		1			GRAY GRAY
	6CE–42510–00–CE	STEERING BRACKET ASSY DIRECTION SUPPORT (ENS.)		1		1		WHITE WHITE
2	90201–40M00	WASHER, PLATE RONDELLE, PLATE	2	2	2	2		
3	90386–39M89	BUSH DOUILLE	2	2	2	2		
4	93210–35321	O-RING JOINT TORIQUE	1	1	1	1		
5	90202–40M47	WASHER, PLATE RONDELLE, PLATE	1	1	1	1		
6	6CE–44551–00–CA	HOUSING, LOWER MOUNT RUBBER 1 BOITIER, SILENT-BLOC INFERIEUR	1	1	1	1		
7	93410–36102	CIRCLIP CIRCLIP	1	1	1	1		
8	6CE–44574–00	STOPPER, LOWER MOUNT RUBBER BUTEE	1	1	1	1		
9	6KA–44555–00	MOUNT DAMPER, LOWER SIDE SILENT-BLOC, INFERIEUR LATERAL	2	2	2	2		
10	90201–16032	WASHER, PLATE RONDELLE, PLATE	2	2	2	2		
11	90202–32M19	WASHER, PLATE RONDELLE, PLATE	2	2	2	2		
12	90201–35008	WASHER, PLATE RONDELLE, PLATE	2	2	2	2		
13	90201–15M58	WASHER, PLATE RONDELLE, PLATE	2	2	2	2		
14	6AW–82149–00	WIRE, LEAD 3 FIL 3	1	1	1	1		
15	90101–14004	BOLT BOULON	2	2	2	2		
16	90185–14M00	NUT, SELF-LOCKING ECROU,AUTO-BLOQUANT	2	2	2	2		
17	92995–14600	WASHER RONDELLE	2	2	2	2		
18	6AW–44552–00–CA	HOUSING, LOWER MOUNT RUBBER 2 BOITIER, SILENT-BLOC INFERIEUR	2	2	2	2		
19	90119–10024	BOLT, WITH WASHER BOULON, AVEC RONDELLE	4	4	4	4		
20	6CE–44514–00	MOUNT DAMPER, UPPER SIDE SILENT-BLOC, SUPERIEUR LATERAL	2	2	2	2		
21	6CE–44526–00	PLATE PLAQUE	1	1	1	1		
22	6CE–44536–00	PLATE 2 PLAQUETTE 2	1	1	1	1		
23	6CE–44532–01	STOPPER, UPPER MOUNT PLAQUETTE	1	1	1	1		
24	90387–28013	COLLAR COLLERETTE	2	2	2	2		
25	90105–14005	BOLT, FLANGE BOULON, A COLLERETTE	2	2	2	2		
26	90185–14M00	NUT, SELF-LOCKING ECROU,AUTO-BLOQUANT	2	2	2	2		

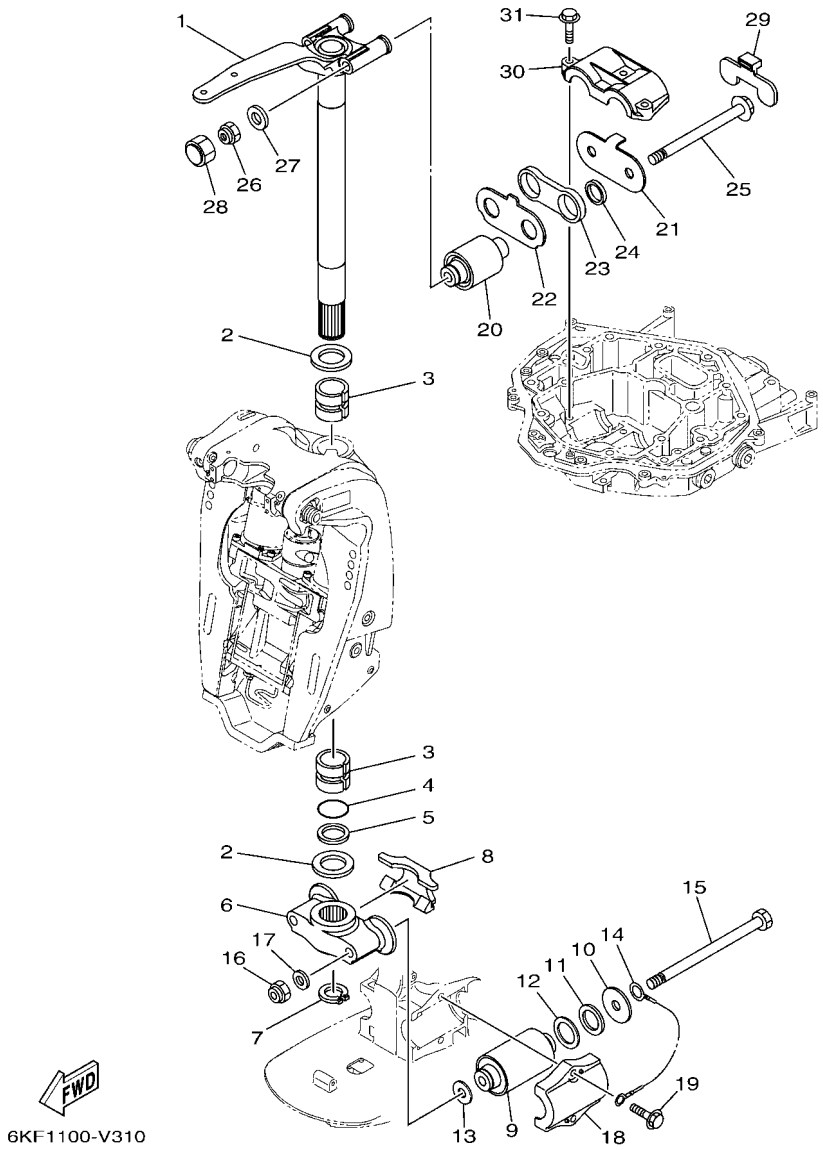

FIG. 31 BRACKET 3 — SUPPORT 3

REF. NO.	PART NO. N° PIECES	DESCRIPTION DESCRIPTION	XCB	XCB2	NCB	NCB2		REMARKS REMARQUES
27	92995–14600	WASHER RONDELLE	2	2	2	2		
28	6CE–44194–01	CAP CAPUCHON	2	2	2	2		
29	6CE–44533–00	DAMPER, UPPER MOUNT RUBBER COUVERCLE, SUSPENSION INFERIEU	1	1	1	1		
30	6CE–44511–00	COVER, UPPER MOUNT COUVERCLE, SUSPENSION SUPERIEU	1	1	1	1		
31	90119–10024	BOLT, WITH WASHER BOULON, AVEC RONDELLE	3	3	3	3		

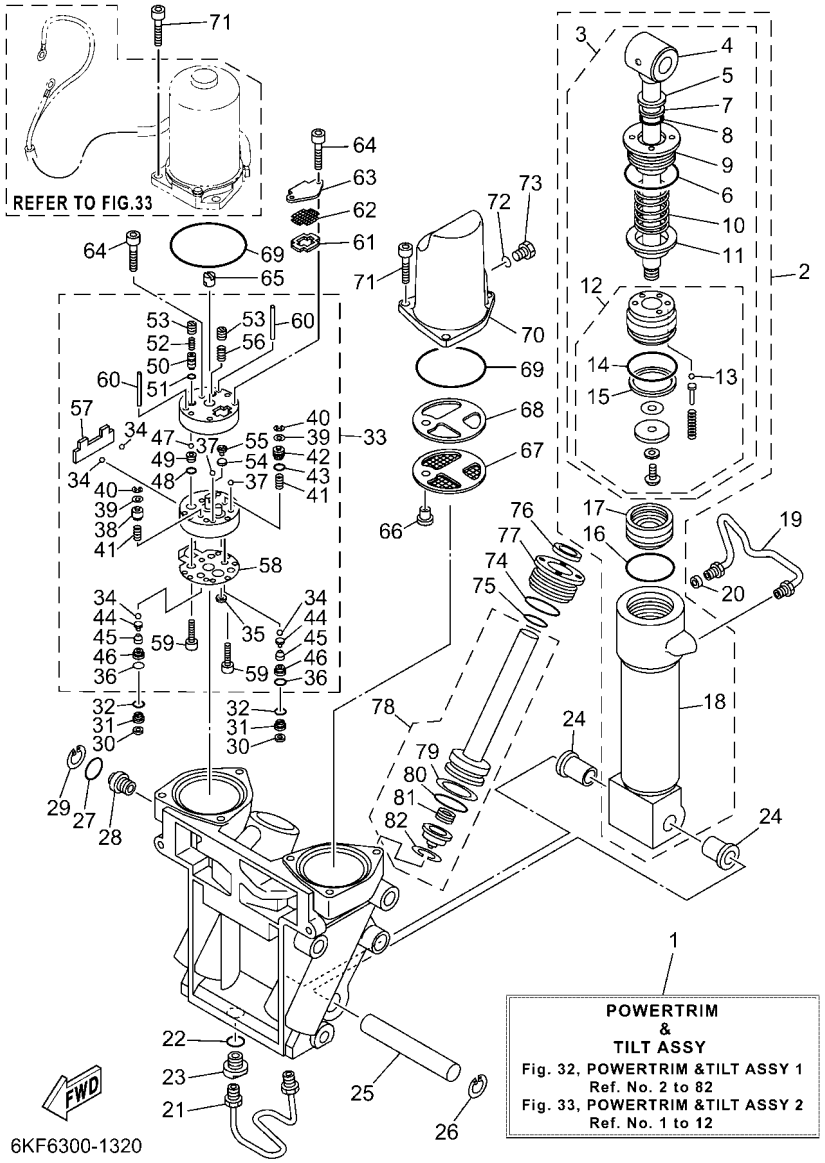

FIG. 32 POWER TRIM & TILT ASSY 1 — PUISSANCE PARER ET INCLINER 1

REF. NO.	PART NO. N° PIECES	DESCRIPTION DESCRIPTION	XCB	XCB2	NCB	NCB2		REMARKS REMARQUES
1	6KA–43800–02–8D	POWER TRIM & TILT ASSY PUISSANCE PARER ET INCLINER (E	1		1			GRAY GRAY
	6KA–43800–02–CE	POWER TRIM & TILT ASSY PUISSANCE PARER ET INCLINER (E		1		1		WHITE WHITE
2	6KA–43840–00	POWER TILT ASSY PUISSANCE INCLINER (ENS.)	1	1	1	1		
3	6KA–43810–00	.TILT PISTON SUB ASSY .INCLINER PISTON AUXILIAIRE(ENS	1	1	1	1		
4	6KA–43801–00	..ROD ..TIGE	1	1	1	1		
5	93106–19001	..OIL SEAL ..JOINT SPY	1	1	1	1		
6	63P–43861–20	..O-RING ..JOINT TORIQUE	1	1	1	1		
7	6H1–43872–00	..RING, BACK UP ..RESSORT	1	1	1	1		
8	61A–4389H–01	..O-RING ..JOINT TORIQUE	1	1	1	1		
9	61A–43811–00	..SCREW, CYLINDER END ..VIS, CYLINDRE RACCORD	1	1	1	1		
10	69J–4384H–00	..SPRING ..RESSORT	1	1	1	1		
11	69J–4382E–00	..ADAPTOR 2 ..ADAPTEUR 2	1	1	1	1		
12	6CE–4380P–00	..PISTON SUB ASSY ..PISTON AUXILIAIRE (ENS.)	1	1	1	1		
13	93505–32038	...BALL ...BILLE	5	5	5	5		
14	61A–43861–00	...O-RING ...JOINT TORIQUE	1	1	1	1		
15	61A–43871–00	...RING, BACK UP ...SEGMENT	1	1	1	1		
16	61A–43861–00	.O-RING .JOINT TORIQUE	1	1	1	1		
17	6H1–43814–11	.PISTON, FREE .PISTON	1	1	1	1		
18	61A–43813–02	.CYLINDER, TILT .CYLINDRE	1	1	1	1		
19	69J–43835–10	PIPE TUYAU	1	1	1	1		
20	69J–4388J–00	PLUG 2 BOUCHON 2	1	1	1	1		
21	69J–43833–02	PIPE TUYAU	1	1	1	1		
22	93210–17239	O-RING JOINT TORIQUE	1	1	1	1		
23	69J–4388E–01	BOLT ,SCREW VIS	1	1	1	1		
24	90386–18M14	BUSH DOUILLE	2	2	2	2		
25	61A–43818–00	PIN, LOWER SHOCK MOUNT AXE, INFERIEUR AMORTISSEUR	1	1	1	1		
26	61A–43876–01	RING, SNAP RESSORT	1	1	1	1		

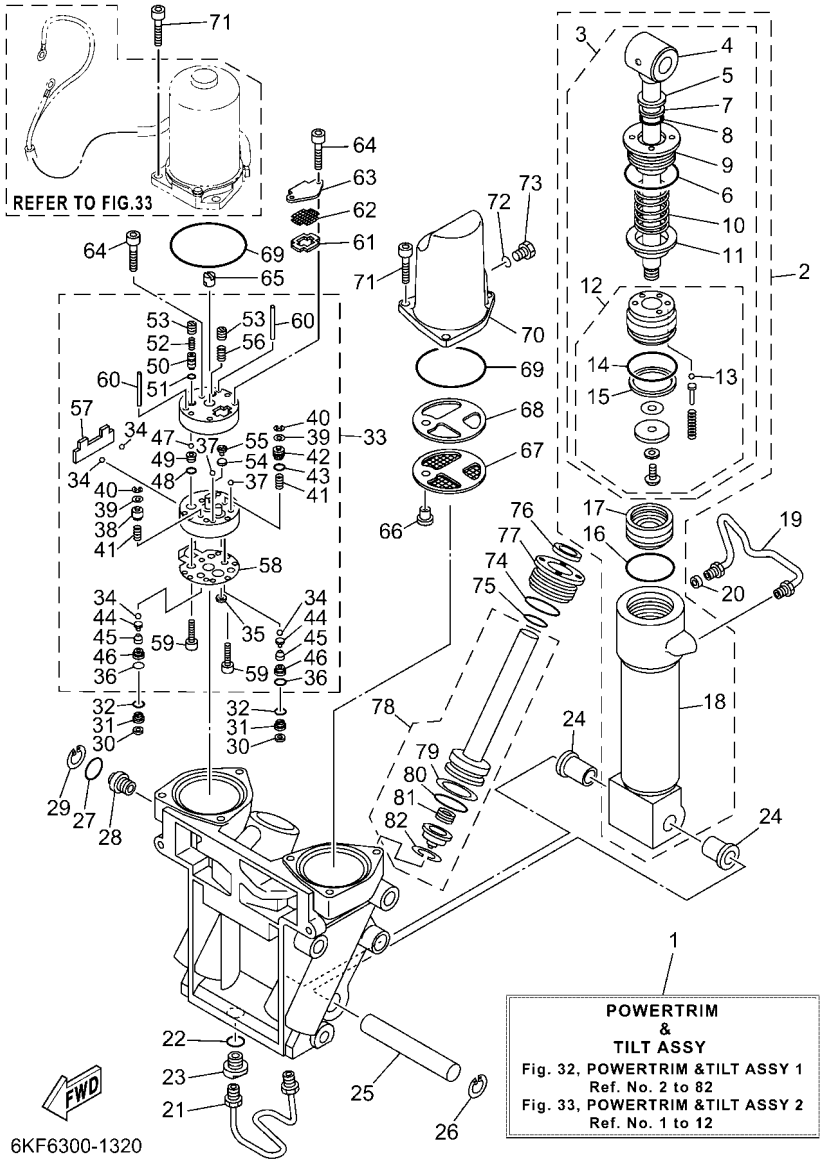

FIG. 32 POWER TRIM & TILT ASSY 1 — PUISSANCE PARER ET INCLINER 1

REF. NO.	PART NO. N° PIECES	DESCRIPTION DESCRIPTION	XCB	XCB2	NCB	NCB2		REMARKS REMARQUES
27	6D8–43863–00	O-RING JOINT TORIQUE	1	1	1	1		
28	69J–43845–00	SCREW, MANUAL RELEASE VIS	1	1	1	1		
29	6H1–43875–00	RING, SNAP RESSORT	1	1	1	1		
30	69J–4381C–00	FILTER 3 FILTRE 3	2	2	2	2		
31	69J–43899–01	PLATE STOPPER PLAQUETTE	2	2	2	2		
32	69J–4389J–00	O-RING JOINT TORIQUE	2	2	2	2		
33	69J–43830–01	GEAR PUMP ASSY POMPE A PIGNON (ENS.)	1	1	1	1		
34	93505–32038	.BALL .BILLE	4	4	4	4		
35	69J–4381C–00	.FILTER 3 .FILTRE 3	1	1	1	1		
36	69J–4389J–00	.O-RING .JOINT TORIQUE	2	2	2	2		
37	93503–16003	.BALL .BILLES	2	2	2	2		
38	6CJ–4384M–00	.PISTON, SHUTTLE 2 .PISTON 2	1	1	1	1		
39	69A–4384F–00	.SEAL, MAIN VALVE .JOINT	2	2	2	2		
40	99002–03600	.CIRCLIP .CIRCLIP	2	2	2	2		
41	69J–43894–00	.SPRING, SHUTTLE RETURN .RESSORT	2	2	2	2		
42	6CJ–43841–00	.PISTON, SHUTTLE .PISTON	1	1	1	1		
43	6H1–43883–00	.O-RING .JOINT TORIQUE	1	1	1	1		
44	60V–4386A–00	.PIN, ABSORBER VALVE .GOUPILLE, SOUPAPE	2	2	2	2		
45	69J–43853–00	.SPRING, MAIN VALVE .RESSORT	2	2	2	2		
46	6CJ–43893–00	.WASHER .RONDELLE	2	2	2	2		
47	93501–08001	.BALL .BILLE	2	2	2	2		
48	93210–08391	.O-RING .JOINT TORIQUE	1	1	1	1		
49	69J–43851–00	.SEAT, RELIEF VALVE .SIEGE	1	1	1	1		
50	63P–43844–20	.PIN, VALVE SUPPORT .GOUPILLE	1	1	1	1		
51	93210–064A5	.O-RING .JOINT TORIQUE	1	1	1	1		
52	69J–43855–00	.SPRING, UP RELIEF .RESSORT	1	1	1	1		
53	6CJ–43843–00	.SCREW, VALVE LOCK .VIS	2	2	2	2		

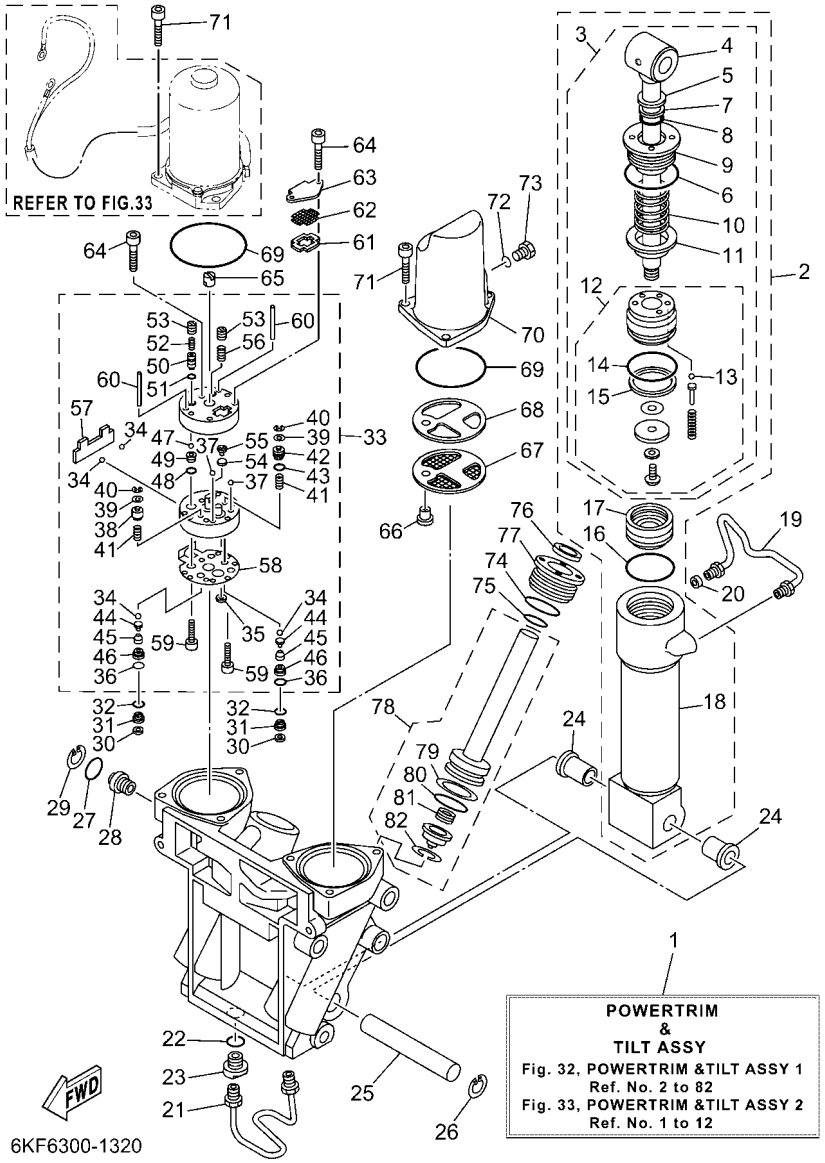

FIG. 32 POWER TRIM & TILT ASSY 1 — PUISSANCE PARER ET INCLINER 1

REF. NO.	PART NO. N° PIECES	DESCRIPTION DESCRIPTION	XCB	XCB2	NCB	NCB2		REMARKS REMARQUES
54	6H1–4384G–11	.SEAL, RELIEF VALVE .JOINT	1	1	1	1		
55	6H1–43844–10	.PIN, VALVE SUPPORT .GOUPILLE	1	1	1	1		
56	6H1–43856–10	.SPRING, DOWN RELIEF .RESSORT	1	1	1	1		
57	69J–43854–00	.SPRING, MANUAL RELEASE .RESSORT	1	1	1	1		
58	69J–4384G–00	.SEAL, RELIEF VALVE .JOINT	1	1	1	1		
59	91318–05025	.BOLT .BOULON	2	2	2	2		
60	93604–35236	.PIN, DOWEL .CLAVETTE	2	2	2	2		
61	69J–43871–00	RING, BACK UP SEGMENT	1	1	1	1		
62	69J–43816–00	FILTER 1 FILTRE 1	1	1	1	1		
63	69J–4381J–00	PLATE PLAQUE	1	1	1	1		
64	91318–05040	BOLT BOULON	3	3	3	3		
65	69J–43831–00	CONNECTOR, SHAFT RACCORD	1	1	1	1		
66	69J–4388H–00	PLUG BOUCHON	1	1	1	1		
67	69J–43817–00	FILTER 2 FILTRE 2	1	1	1	1		
68	69J–4388F–00	SPACER ENTRETOISE	1	1	1	1		
69	93210–66001	O-RING JOINT TORIQUE	2	2	2	2		
70	6KA–43828–00	BODY, RESERVOIR CORPS	1	1	1	1		
71	69J–43888–00	BOLT, SOCKET BOULON	6	6	6	6		
72	93210–09165	O-RING JOINT TORIQUE	1	1	1	1		
73	6H1–43829–00	PLUG, RESERVOIR BOUCHON	1	1	1	1		
74	61A–43861–00	O-RING JOINT TORIQUE	2	2	2	2		
75	6D8–43863–00	O-RING JOINT TORIQUE	2	2	2	2		
76	63P–43812–20	SEAL, DUST JOINT	2	2	2	2		
77	61A–43821–02	SCREW, TRIM CYLINDER END VIS	2	2	2	2		
78	69J–43820–01	TRIM PISTON SUB ASSY PARER PISTON AUXILIAIRE (ENS.)	2	2	2	2		
79	61A–43874–00	.RING, BACK UP .RESSORT	1	1	1	1		
80	61A–43864–00	.O-RING .JOINT TORIQUE	1	1	1	1		

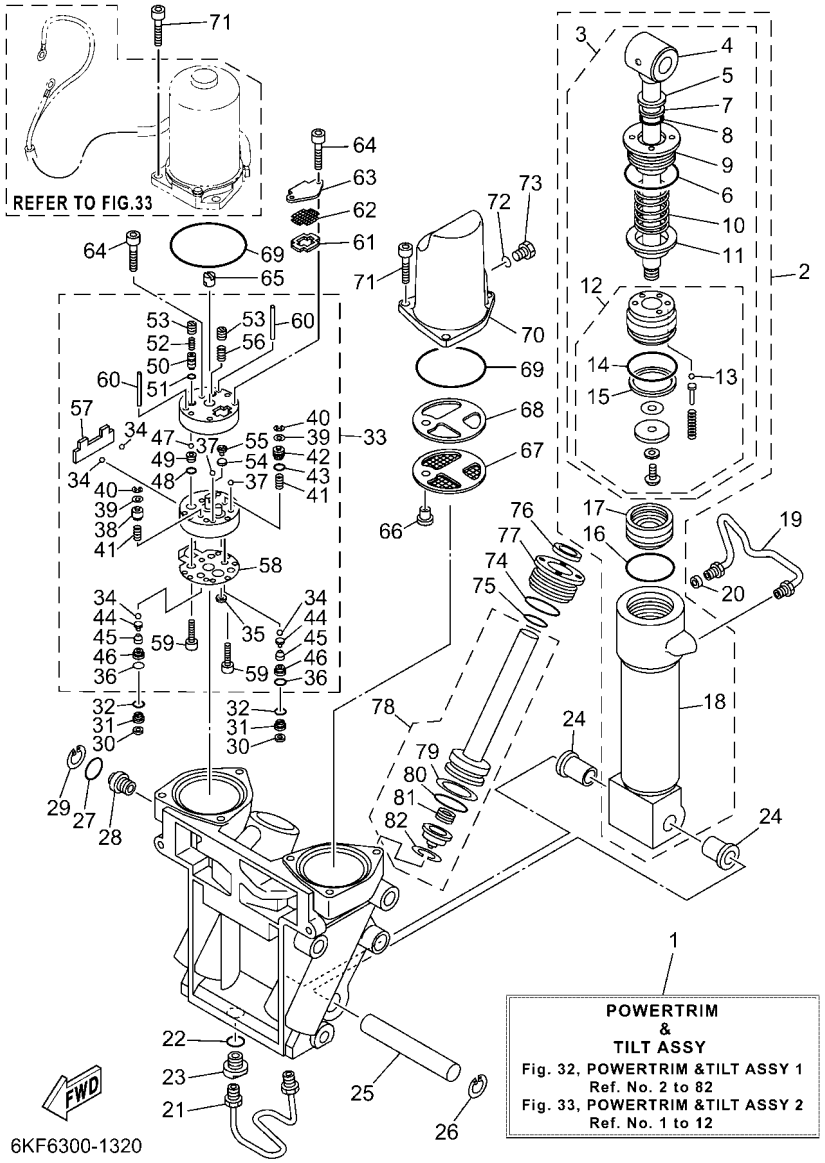

FIG. 32 POWER TRIM & TILT ASSY 1 — PUISSANCE PARER ET INCLINER 1

REF. NO.	PART NO. N° PIECES	DESCRIPTION DESCRIPTION	XCB	XCB2	NCB	NCB2		REMARKS REMARQUES
81	61A–4384H–10	.SPRING .RESSORT	1	1	1	1		
82	61A–43875–10	.RING, SNAP .RESSORT	1	1	1	1		

FIG. 33 POWER TRIM & TILT ASSY 2 — PUISSANCE PARER ET INCLINER 2

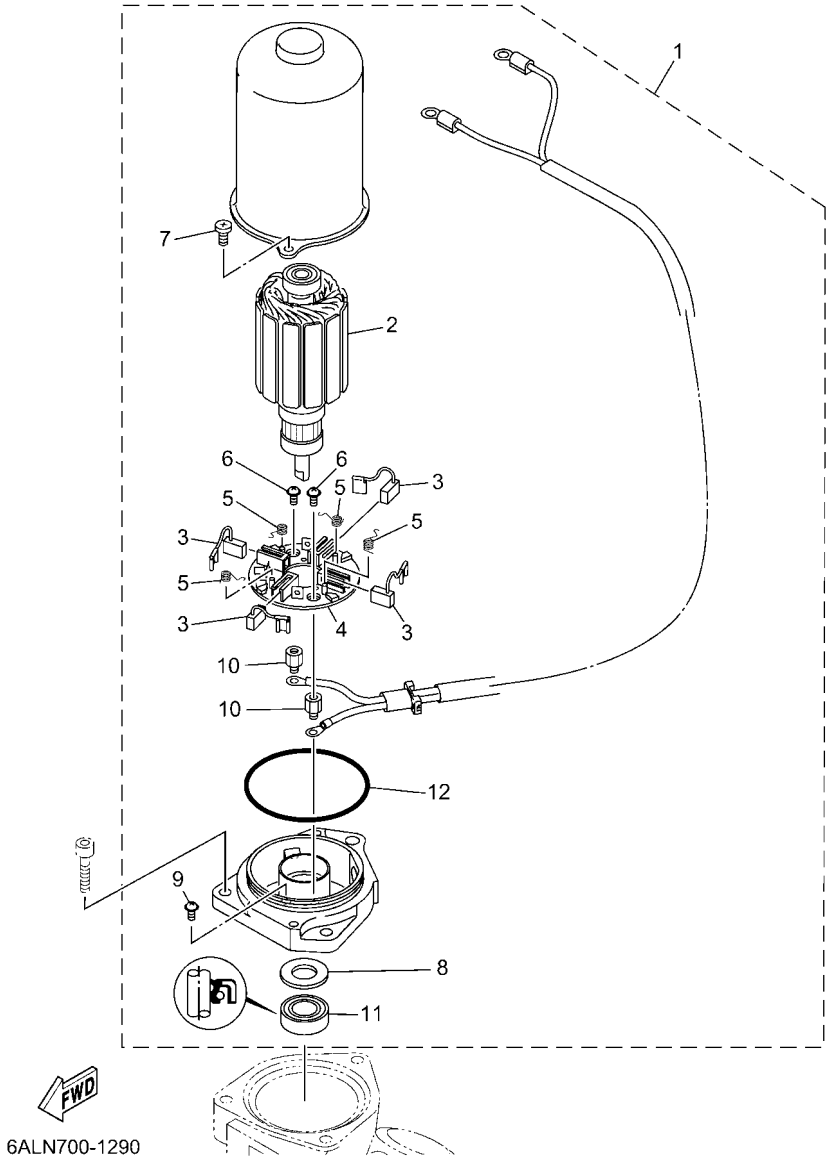

REF. NO.	PART NO. N° PIECES	DESCRIPTION DESCRIPTION	XCB	XCB2	NCB	NCB2		REMARKS REMARQUES
1	6KA–43880–08–8D	MOTOR ASSY MOTEUR (ENS.)	1		1			GRAY GRAY
	6KA–43880–08–CE	MOTOR ASSY MOTEUR (ENS.)		1		1		WHITE WHITE
2	6ML–43805–00	.ARMATURE ASSY .INDUIT (ENS.)	1	1	1	1		
3	6KA–43892–00	.BRUSH 2 .BALAI 2	4	4	4	4		
4	6KA–43806–00	.BRUSH HOLDER ASSY .PORTE-BALAI (ENS.)	1	1	1	1		
5	6KA–4386K–00	.SPRING, BRUSH .RESSORT, BALAI	4	4	4	4		
6	97602–04306	.SCREW, PAN HEAD WITH WASHER .VIS, AVEC RONDELLE	2	2	2	2		
7	6KA–43879–00	.SCREW, WITH WASHER .VIS, AVEC RONDELLE	2	2	2	2		
8	6KA–4387G–00	.WASHER .RONDELLE	1	1	1	1		
9	97602–04308	.SCREW, PAN HEAD WITH WASHER .VIS, AVEC RONDELLE	1	1	1	1		
10	6KA–4388F–00	.SPACER .ENTRETOISE	2	2	2	2		
11	6KA–43882–00	.OIL SEAL .JOINT SPI	1	1	1	1		
12	6KA–43862–00	.O-RING .JOINT TORIQUE	1	1	1	1		

FIG. 34 UPPER CASING FOURREAU

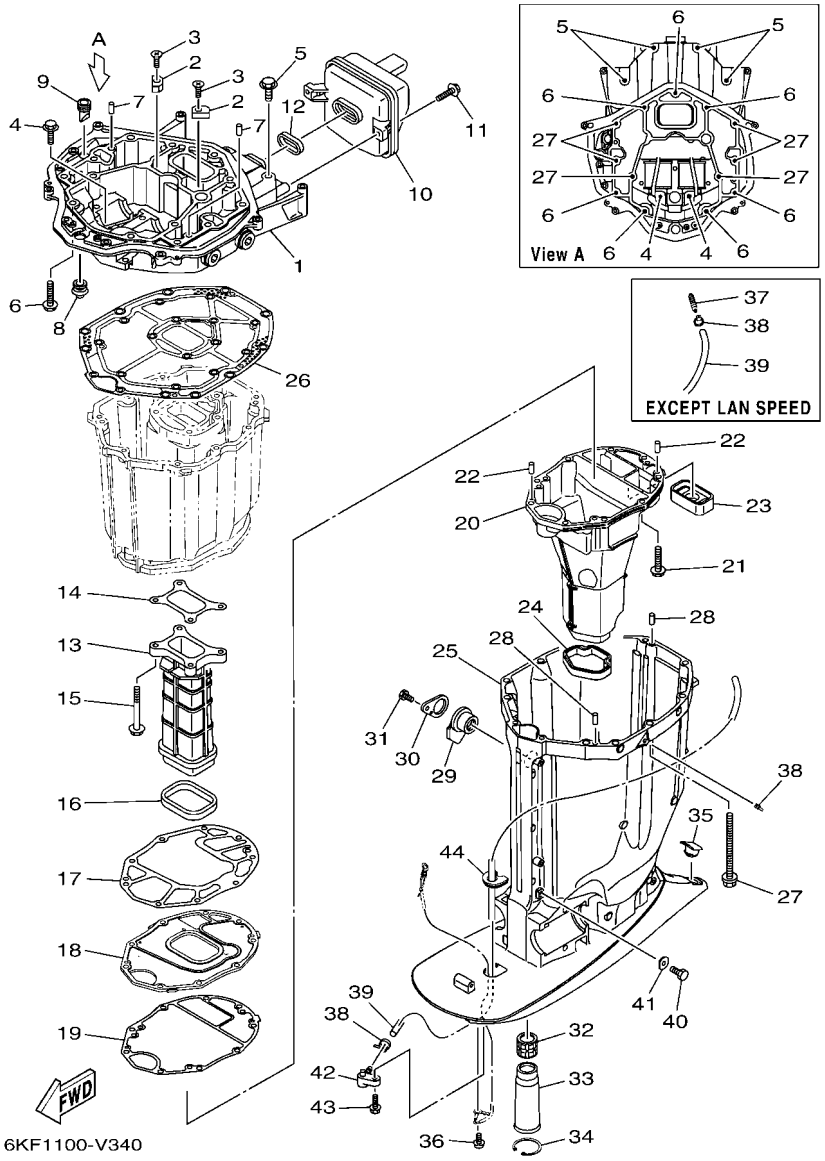

REF. NO.	PART NO. N° PIECES	DESCRIPTION DESCRIPTION	XCB	XCB2	NCB	NCB2		REMARKS REMARQUES
1	6CE–41137–01	GUIDE, EXHAUST COLLECTEUR D'ECHAPPEMENT	1	1	1	1		
2	63P–11325–11	ANODE ANODE	2	2	2	2		
3	90151–06M02	SCREW, COUNTERSUNK VIS, TETE NOYEE	2	2	2	2		
4	90119–08182	BOLT, WITH WASHER BOULON, AVEC RONDELLE	2	2	2	2		
5	97E75–10545	BOLT, HEXAGON W/W DEEP RECESS VIS HEXAGONAL AVC RONDELLE	4	4	4	4		
6	97E75–10535	BOLT, HEXAGON W/W DEEP RECESS VIS HEXAGONAL AVC RONDELLE	7	7	7	7		
7	93608–16M16	PIN, DOWEL AXE	2	2	2	2		
8	6E5–42724–01	GROMMET PASSE-FIL	1	1	1	1		
9	61A–42717–00	RUBBER, SEAL 2 JOINT EN CAOUTCHOUC 2	1	1	1	1		
10	6CB–14750–A0	SILENCER ASSY SILENCIEUX	1	1	1	1		
11	95D95–06020	BOLT, FLANGE DEEP RECESS BOULON FIXATION	2	2	2	2		
12	6CB–14755–01	GASKET, SILENCER JOINT, SILENCIEUX	1	1	1	1		
13	6CB–41132–01	MANIFOLD, EXHAUST PIPE D'ECHAPPEMENT	1	1	1	1		
14	6CB–41134–00	GASKET, EXHAUST MANIFOLD 2 JOINT, PIPE D'ECHAPPEMENT 2	1	1	1	1		
15	97E75–08560	BOLT, HEXAGON W/W DEEP RECESS VIS HEXAGONAL AVC RONDELLE	4	4	4	4		
16	6CB–41138–00	SEAL, EXT. 1 JOINT DE GROUPE 1	1	1	1	1		
17	6CB–41135–00	GASKET, EXHAUST MANIFOLD JOINT, PIPE D'ECHAPPEMENT	1	1	1	1		
18	6KA–45181–00	PLATE PLAQUETTE	1	1	1	1		
19	6CE–41136–00	GASKET, EXHAUST MANIFOLD 4 JOINT, PIPE D'ECHAPPEMENT 4	1	1	1	1		
20	6KA–14711–00	MUFFLER 1 POT D'ECHAPPEMENT 1	1	1	1	1		
21	97E75–08535	BOLT, HEXAGON W/W DEEP RECESS VIS HEXAGONAL AVC RONDELLE	9	9	9	9		
22	93606–19M23	PIN, DOWEL GOUPILLE	2	2	2	2		
23	6CE–45127–00	SEAL JOINT	1	1	1	1		
24	6CE–45123–00	GASKET, MUFFLER JOINT, POT DE DETENTE	1	1	1	1		
25	6KA–45111–01–8D	CASING, UPPER FOURREAU	1		1			GRAY GRAY
	6KA–45111–01–CE	CASING, UPPER FOURREAU		1		1		WHITE WHITE
26	6CB–45113–10	GASKET, UPPER CASING JOINT, TUBE D'ARBRE	1	1	1	1		

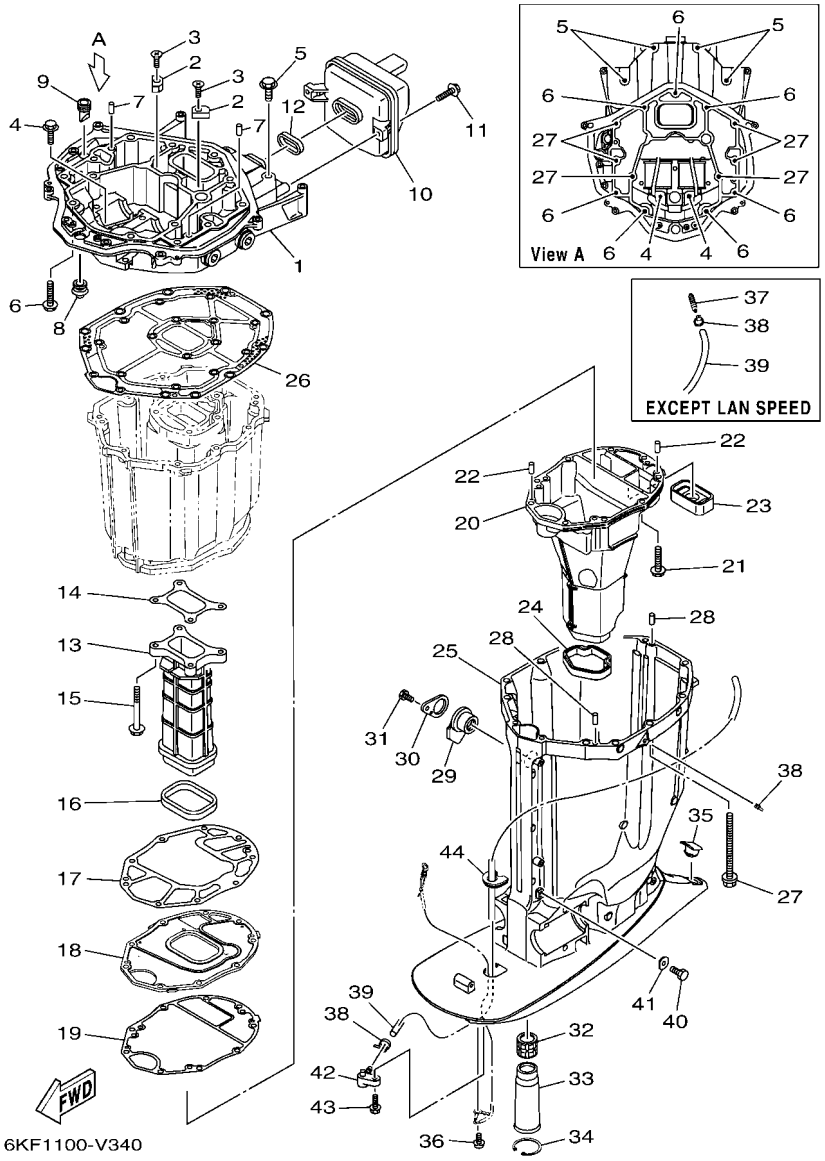

FIG. 34 UPPER CASING FOURREAU

REF. NO.	PART NO. N° PIECES	DESCRIPTION DESCRIPTION	XCB	XCB2	NCB	NCB2		REMARKS REMARQUES
27	90119–10007	BOLT, WITH WASHER BOULON, AVEC RONDELLE	6	6	6	6		
28	93608–16M16	PIN, DOWEL AXE	2	2	2	2		
29	6BB–15316–01	DAMPER 1 AMORTISSEUR 1	1	1	1	1		
30	6BB–45152–01	COVER, UPPER CASING 2 CAPUCHON FOURREAU	1	1	1	1		
31	97D95–06012	BOLT, HEXAGON DEEP RECESS VIS HEXAGONAL	1	1	1	1		
32	69J–45318–01	BUSHING, DRIVE SHAFT DOUILLE, ARBRE MOTEUR	1	1	1	1		
33	6KA–46153–00	COLLAR, GUIDE COLLIER DE GUIDE	1	1	1	1		
34	93420–50093	CIRCLIP CIRCLIP, TYPE S	1	1	1	1		
35	61A–45155–01	CAP CAPUCHON	1	1	1	1		
36	95D95–06010	BOLT, FLANGE DEEP RECESS BOULON FIXATION	1	1	1	1		
37	6E5–83558–00	END, NIPPLE RACCORD DE NIPPLE			1	1		EXCEPT LAN SPEED EXCEPT LAN SPEED
38	90465–11M10	CLAMP BRIDE	2	2				FOR LAN SPEED FOR LAN SPEED
	90465–11M10	CLAMP BRIDE			3	3		EXCEPT LAN SPEED EXCEPT LAN SPEED
39	6KF–46894–00	HOSE DURITE	1	1	1	1		
40	97D95–06010	BOLT, HEXAGON DEEP RECESS VIS HEXAGONAL	1	1	1	1		
41	90201–06M02	WASHER, PLATE RONDELLE, PLATE	1	1	1	1		
42	63P–45379–00	NIPPLE, HOSE RACCORD D'ESSENCE	1	1	1	1		
43	90119–06287	BOLT, WITH WASHER BOULON, AVEC RONDELLE	1	1	1	1		
44	6KA–44521–00	SEAL JOINT	1	1	1	1		

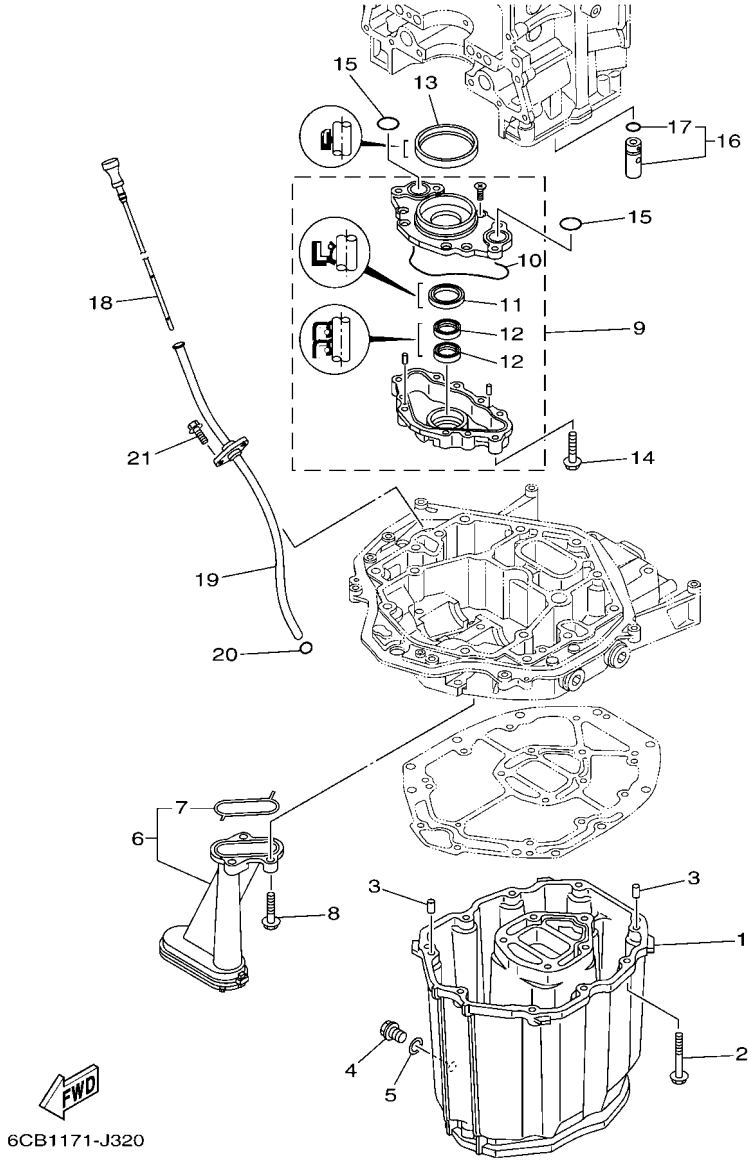

FIG. 35 OIL PAN — VENTILATEUR D'HUILE

REF. NO.	PART NO. N° PIECES	DESCRIPTION DESCRIPTION	XCB	XCB2	NCB	NCB2		REMARKS REMARQUES
1	6CB–15311–01	OIL PAN VENTILATEUR D'HUILE	1	1	1	1		
2	97E75–08535	BOLT, HEXAGON W/W DEEP RECESS VIS HEXAGONAL AVC RONDELLE	10	10	10	10		
3	93608–16M16	PIN, DOWEL AXE	2	2	2	2		
4	90340–14M06	PLUG, STRAIGHT SCREW PLOT, FILETE DROIT	1	1	1	1		
5	90430–14M09	GASKET JOINT	1	1	1	1		
6	6CB–13411–00	STRAINER, OIL FILTRE, HUILE	1	1	1	1		
7	6AW–13415–00	.SEAL, OIL STRAINER .JOINT, FILTRE A HUILE	1	1	1	1		
8	95812–06025	BOLT, FLANGE BOULON	3	3	3	3		
9	6CB–13300–00	OIL PUMP ASSY POMPE A HUILE COMPLETE	1	1	1	1		
10	6CB–13329–00	.GASKET, PUMP COVER .JOINT, COUVERCLE DE POMPE	1	1	1	1		
11	6AW–13119–00	.OIL SEAL .JOINT SPY	1	1	1	1		
12	69J–13631–00	.OIL SEAL .JOINT SPY	2	2	2	2		
13	6CB–11355–00	SEAL, CYLINDER 1 JOINT, SPY CYLINDRE	1	1	1	1		
14	95D75–06040	BOLT, FLANGE DEEP RECESS BOULON FIXATION	4	4	4	4		
15	93210–26658	O-RING JOINT TORIQUE	2	2	2	2		
16	6CB–13490–00	RELIEF VALVE ASSY SOUPAPE DE SECURITE COMPLET	1	1	1	1		
17	6CB–13473–00	.O-RING .JOINT TORIQUE	1	1	1	1		
18	6CB–15362–00	PLUG, OIL LEVEL PLOT, NIVEAU D'HUILE	1	1	1	1		
19	6CB–15377–00	GUIDE, INLET GUIDE D'ADMISSION	1	1	1	1		
20	93210–19MJ3	O-RING JOINT TORIQUE	1	1	1	1		
21	95D95–06016	BOLT, FLANGE DEEP RECESS BOULON FIXATION	2	2	2	2		

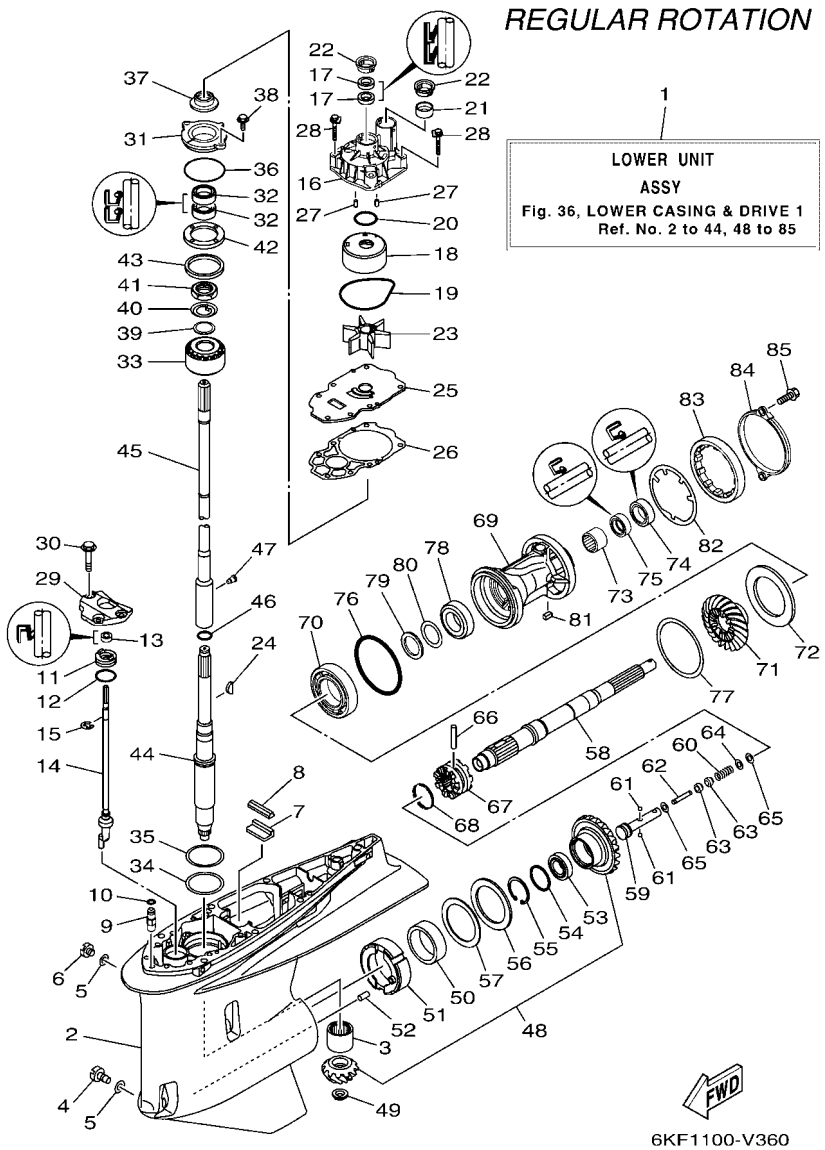

FIG. 36 LOWER CASING & DRIVE 1 — BOITIER D'HELICE TRANSMISSION1

REF. NO.	PART NO. N° PIECES	DESCRIPTION DESCRIPTION	XCB	XCB2	NCB	NCB2		REMARKS REMARQUES
1	6ML–45300–00–8D	LOWER UNIT ASSY UNITE INFERIEURE (ENS.)	1					GRAY, RH GRAY, RH
	6ML–45300–00–CE	LOWER UNIT ASSY UNITE INFERIEURE (ENS.)		1				WHITE, RH WHITE, RH
2	6KA–45301–00–8D	CASING, LOWER BEQUILLE	1					GRAY GRAY
	6KA–45301–00–CE	CASING, LOWER BEQUILLE		1				WHITE WHITE
3	93311–83280	BEARING ROULEMENT	1	1				
4	688–45341–10	PLUG, DRAIN BOUCHON DE VIDANGE	1	1				
5	90430–08003	GASKET JOINT	2	2				
6	90340–08002	PLUG, STRAIGHT SCREW PLOT, FILETE DROIT	1	1				
7	663–45376–00	GUIDE, SEAL DAMPER BUTEE, JOINT CAOUTCHOUC	1	1				
8	6CE–45375–00	DAMPER, SEAL BOURRELET, CAOUTCHOUC	1	1				
9	63P–45378–00	NIPPLE, HOSE RACCORD, TUYAU	1	1				
10	93210–07003	O-RING JOINT TORIQUE	1	1				
11	6CE–45321–20	PLATE PLAQUETTE	1	1				
12	93210–33M49	O-RING JOINT TORIQUE	1	1				
13	93106–10001	OIL SEAL JOINT SPY	1	1				
14	6KA–44150–00	SHIFT CAM ASSY CAME D'INVERSION	1	1				
15	99001–09600	CIRCLIP CIRCLIP	1	1				
16	6CE–44311–01	HOUSING, WATER PUMP CORPS, POMPE A EAU	1	1				
17	93104–22M07	OIL SEAL JOINT SPY	2	2				
18	6AW–44322–00	INSERT, CARTRIDGE CUVETTE	1	1				
19	93210–94003	O-RING JOINT TORIQUE	1	1				
20	93210–37160	O-RING JOINT TORIQUE	1	1				
21	6AW–44365–01	DAMPER, WATER SEAL 1 JOINT, TUBE D'EAU 1	1	1				
22	6AW–44312–00	COVER, WATER PUMP HOUSING COUVERCLE	2	2				
23	6CE–44352–00	IMPELLER TURBINE	1	1				
24	90280–04002	KEY, WOODRUFF CLAVETTE, DEMI-LUNE	1	1				
25	6CE–44323–01	OUTER PLATE, CARTRIDGE PLAQUE EXTERIEURE	1	1				

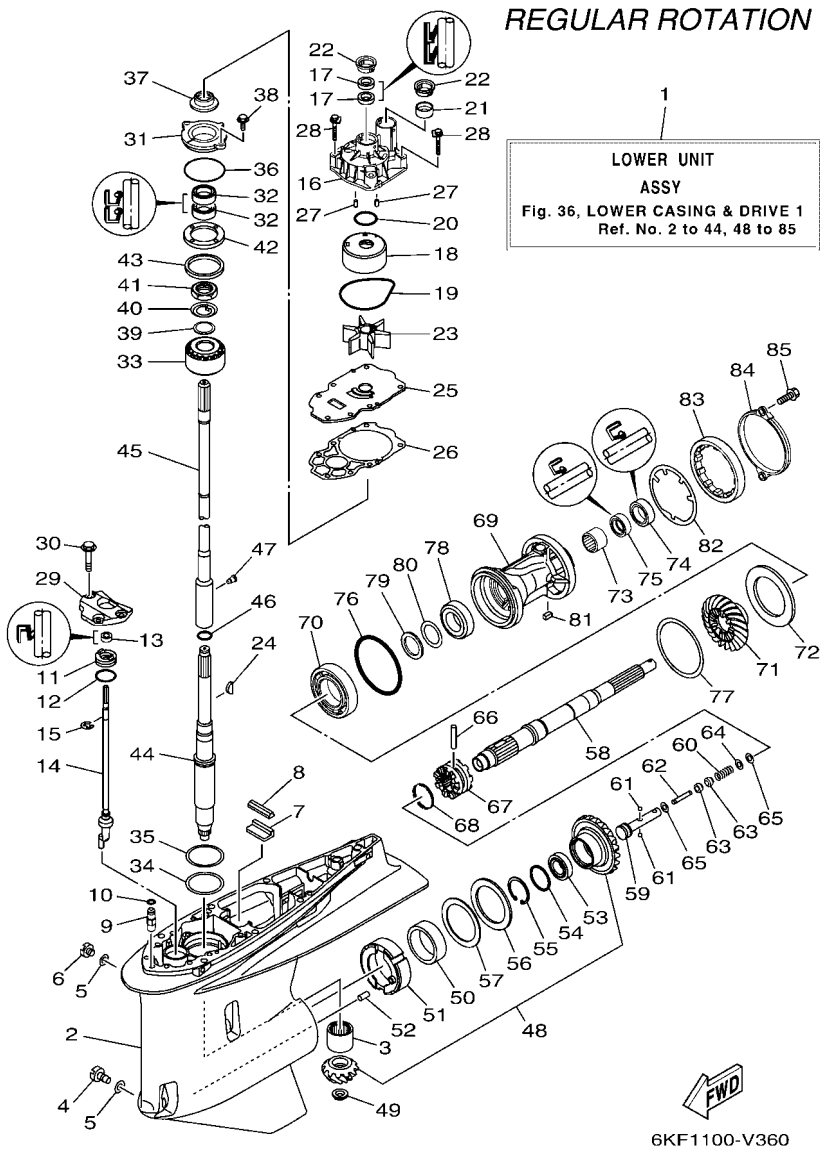

FIG. 36 LOWER CASING & DRIVE 1 — BOITIER D'HELICE TRANSMISSION1

REF. NO.	PART NO. N° PIECES	DESCRIPTION DESCRIPTION	XCB	XCB2	NCB	NCB2		REMARKS REMARQUES
26	6CE–44315–00	GASKET, WATER PUMP JOINT, POMPE A EAU	1	1				
27	93606–12019	PIN, DOWEL GOUPILLE	2	2				
28	90119–08191	BOLT, WITH WASHER BOULON, AVEC RONDELLE	4	4				
29	6CB–44312–00	COVER, WATER PUMP HOUSING COUVERCLE	1	1				
30	90119–08180	BOLT, WITH WASHER BOULON, AVEC RONDELLE	3	3				
31	6AW–45335–00–CA	HOUSING, OIL SEAL LOGEMENT DE JOINT SPY	1	1				
32	93101–28019	OIL SEAL JOINT SPY	2	2				
33	93399–99962	BEARING ROULEMENT	1	1				
34	90201–68008	WASHER, PLATE RONDELLE, PLATE	1	1				
35	6AW–45587–00	SHIM (T:0.10MM) CALE (T:0.10MM)	1	1				UR UR
	6AW–45587–10	SHIM (T:0.12MM) CALE (T:0.12MM)	1	1				UR UR
	6AW–45587–20	SHIM (T:0.15MM) CALE (T:0.15MM)	1	1				UR UR
	6AW–45587–30	SHIM (T:0.18MM) CALE (T:0.18MM)	1	1				UR UR
	6AW–45587–40	SHIM (T:0.30MM) CALE (T:0.30MM)	1	1				UR UR
	6AW–45587–50	SHIM (T:0.40MM) CALE (T:0.40MM)	1	1				UR UR
	6AW–45587–60	SHIM (T:0.50MM) CALE (T:0.50MM)	1	1				UR UR
36	93210–69MG6	O-RING JOINT TORIQUE	1	1				
37	6KA–45344–00	COVER, OIL SEAL FLASQE, JOINT D'HUILE	1	1				
38	97E95–08520	BOLT, HEXAGON W/W DEEP RECESS VIS HEXAGONAL AVC RONDELLE	2	2				
39	90201–301U7	WASHER, PLATE RONDELLE, PLATE	1	1				
40	90214–30003	WASHER, CLAW RONDELLE, A GRIFFES	1	1				
41	90170–30M18	NUT ECROU	1	1				
42	6AW–45244–00	NUT ECROU	1	1				
43	6T5–45539–00	SPACER 2 ENTRETOISE 2	1	1				
44	6KA–45501–00	DRIVE SHAFT COMP. ARBRE MOTEUR COMP.	1	1				
45	6KF–45802–00	INTERMEDI. DRIVE SHAFT COMP. INTERMEDI. ARBRE MOTEUR COMP	1	1				X(25.3") X(25.3")
46	93210–22MF1	O-RING JOINT TORIQUE	1	1				

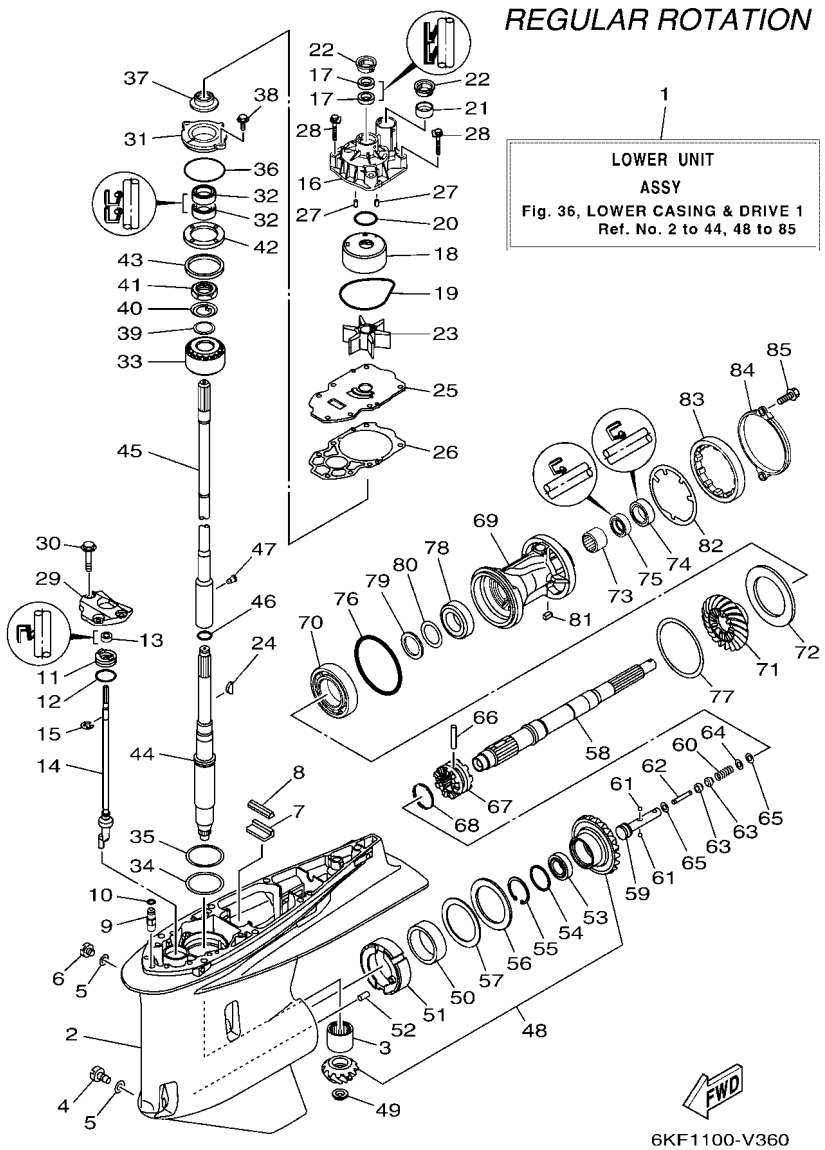

FIG. 36 LOWER CASING & DRIVE 1 — BOITIER D'HELICE TRANSMISSION1

REF. NO.	PART NO. N° PIECES	DESCRIPTION DESCRIPTION	XCB	XCB2	NCB	NCB2		REMARKS REMARQUES
47	90149–05048	SCREW VIS	1	1				
48	6KA–45550–00	GEAR SET KIT, PIGNON	1	1				
49	90179–16017	NUT ECROU	1	1				
50	93311–85894	BEARING ROULEMENT	1	1				
51	6CB–45824–00	ADAPTER ADAPTATEUR	1	1				
52	93608–16M16	PIN, DOWEL AXE	1	1				
53	93332–000A4	BEARING ROULEMENT	1	1				
54	90201–41008	WASHER, PLATE RONDELLE, PLATE	1	1				
55	99009–47500	CIRCLIP CIRCLIP	1	1				
56	93340–67011	BEARING CERVEAUX DE DIRECTION	1	1				
57	6CB–45567–00	SHIM (T:2.00MM) CALE (T:2.00MM)	1	1				UR UR
	6CB–45567–10	SHIM (T:2.03MM) CALE (T:2.03MM)	1	1				UR UR
	6CB–45567–20	SHIM (T:2.06MM) CALE (T:2.06MM)	1	1				UR UR
	6CB–45567–30	SHIM (T:2.09MM) CALE (T:2.09MM)	1	1				UR UR
	6CB–45567–40	SHIM (T:2.12MM) CALE (T:2.12MM)	1	1				UR UR
	6CB–45567–50	SHIM (T:2.15MM) CALE (T:2.15MM)	1	1				UR UR
58	6CB–45611–00	SHAFT, PROPELLER ARBRE, HELICE	1	1				
59	6CB–45634–00	SLIDE, SHIFT CONTRE-POUSSOIR	1	1				
60	90501–10M77	SPRING, COMPRESSION RESSORT, COMPRESSION	1	1				
61	93501–04011	BALL BILLE	2	2				
62	6H1–45668–00	SHAFT, FREE 1 AXE 1	1	1				
63	61A–45635–00	PLUNGER, SHIFT POUSSOIR D'EMBRAYAGE	2	2				
64	90201–02M00	WASHER, PLATE RONDELLE, PLATE	1	1				
65	90183–02M03	NUT, SPRING ECROU, RESSORT	2	2				
66	90250–08M07	PIN, STRAIGHT GOUPILLE, DROITE	1	1				
67	6ML–45631–00	CLUTCH, DOG CRABOT	1	1				
68	6E5–45633–01	RING, CROSS PIN JONC, GOUPILLE CRABOT	1	1				

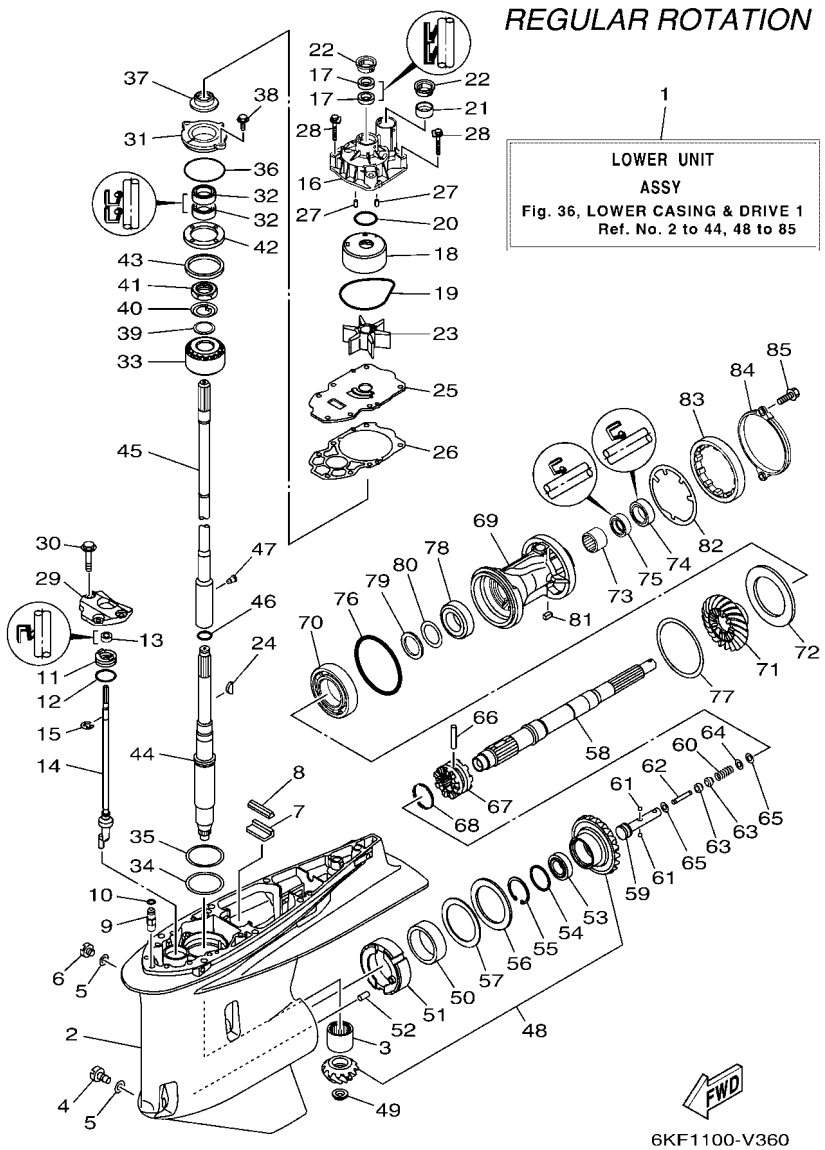

FIG. 36 LOWER CASING & DRIVE 1 — BOITIER D'HELICE TRANSMISSION1

REF. NO.	PART NO. N° PIECES	DESCRIPTION DESCRIPTION	XCB	XCB2	NCB	NCB2		REMARKS REMARQUES
69	6CE–45332–00–CA	HOUSING, BEARING FLASQUE, ROULEMENT	1	1				
70	93306–209U0	BEARING ROULEMENT	1	1				
71	6KA–45571–00	GEAR 2 (21T) PIGNON 2 (21T)	1	1				
72	6CB–45576–00	WASHER, THRUST 2 RONDELLE DE CALAGE 2	1	1				
73	93315–43061	BEARING ROULEMENT	1	1				
74	93101–30030	OIL SEAL JOINT SPY	1	1				
75	93101–30019	OIL SEAL JOINT SPY	1	1				
76	93211–02001	O-RING JOINT TORIQUE	1	1				
77	6CB–45577–00	SHIM (T:0.10MM) CALE (T:0.10MM)	1	1				UR UR
	6CB–45577–10	SHIM (T:0.12MM) CALE (T:0.12MM)	1	1				UR UR
	6CB–45577–20	SHIM (T:0.15MM) CALE (T:0.15MM)	1	1				UR UR
	6CB–45577–30	SHIM (T:0.18MM) CALE (T:0.18MM)	1	1				UR UR
	6CB–45577–40	SHIM (T:0.30MM) CALE (T:0.30MM)	1	1				UR UR
	6CB–45577–50	SHIM (T:0.40MM) CALE (T:0.40MM)	1	1				UR UR
	6CB–45577–60	SHIM (T:0.50MM) CALE (T:0.50MM)	1	1				UR UR
78	93332–000A5	BEARING ROULEMENT	1	1				
79	90201–32008	WASHER, PLATE RONDELLE, PLATE	1	1				
80	676–45567–00	SHIM (T:0.7MM) CALE	1	1				UR UR
	676–45567–10	SHIM (T:0.8MM) CALE	1	1				UR UR
	676–45567–20	SHIM (T:0.9MM) CALE	1	1				UR UR
	676–45567–30	SHIM (T:1.0MM) CALE	1	1				UR UR
	676–45567–40	SHIM (T:1.1MM) CALE	1	1				UR UR
	676–45567–50	SHIM (T:1.2MM) CALE	1	1				UR UR
81	90282–05008	KEY, STRAIGHT CLAVETTE, DROITE	1	1				
82	6CB–45383–00	WASHER, CLAW FREIN D'ECROU	1	1				
83	6CB–45384–00	NUT ECROU	1	1				
84	6CE–45361–10	CAP, LOWER CASING COUVERCLE, BOITIER D'HELICE	1	1				

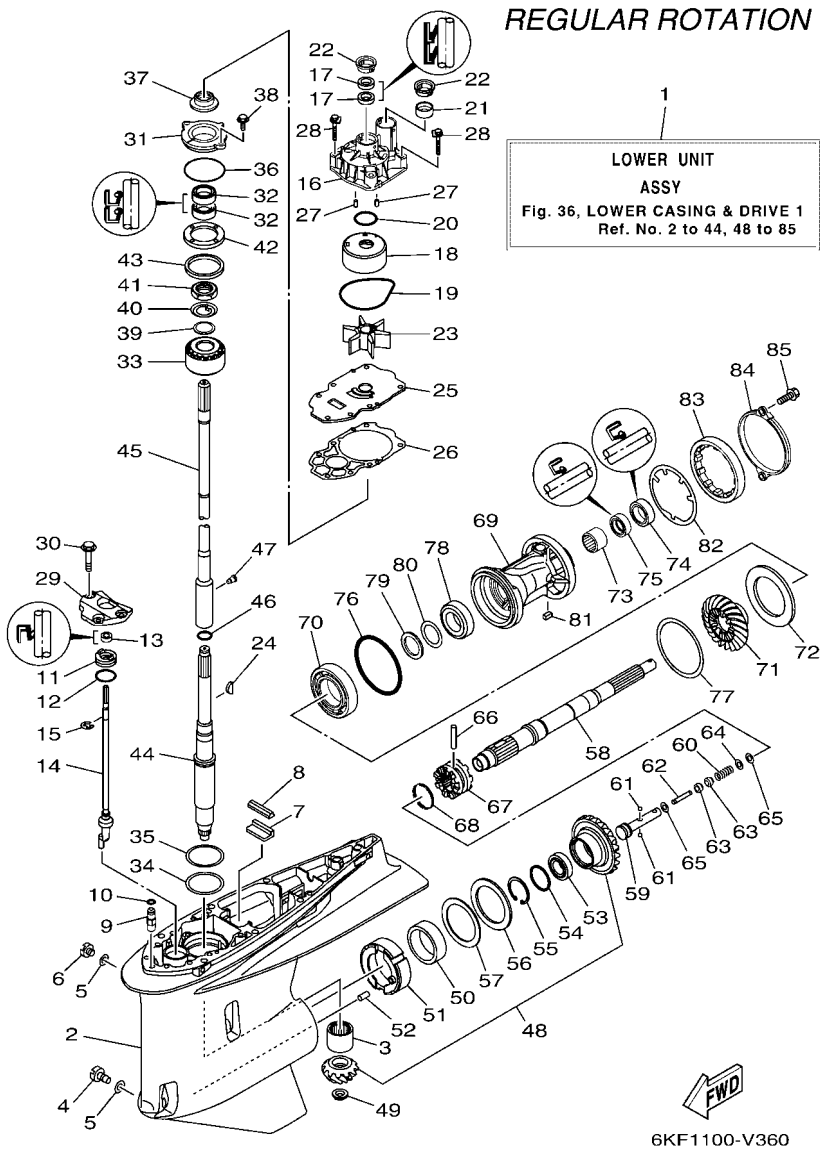

FIG. 36 LOWER CASING & DRIVE 1 — BOITIER D'HELICE TRANSMISSION1

REF. NO.	PART NO. N° PIECES	DESCRIPTION DESCRIPTION	XCB	XCB2	NCB	NCB2		REMARKS REMARQUES
85	90105–08M61	BOLT, FLANGE BOULON, A COLLERETTE	2	2				

FIG. 37 LOWER CASING & DRIVE 2 — BOITIER D'HELICE TRANSMISSION2

REGULAR ROTATION

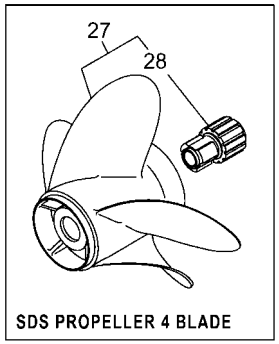

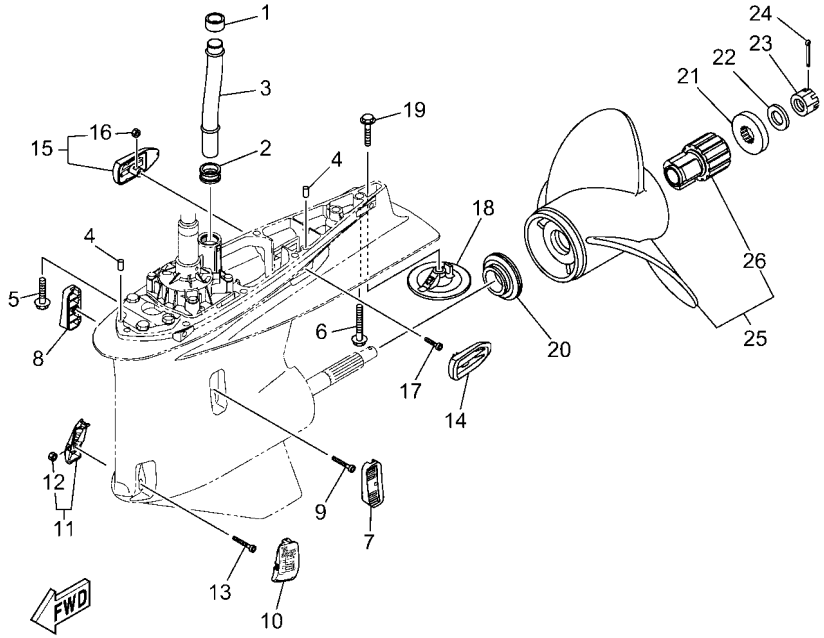

6KK5100-Z370

REF. NO.	PART NO. N° PIECES	DESCRIPTION DESCRIPTION	XCB	XCB2	NCB	NCB2		REMARKS REMARQUES
1	6AW–44365–01	DAMPER, WATER SEAL 1 JOINT, TUBE D'EAU 1	1	1	1	1		
2	6AW–44366–01	DAMPER, WATER SEAL 2 JOINT, TUBE D'EAU 2	1	1	1	1		
3	6CE–44361–00	TUBE, WATER 1 TUBE D'EAU 1	1	1	1	1		
4	93608–16M16	PIN, DOWEL AXE	2	2				
5	90119–10024	BOLT, WITH WASHER BOULON, AVEC RONDELLE	7	7				
6	97E75–10570	BOLT, HEXAGON W/W DEEP RECESS VIS HEXAGONAL AVC RONDELLE	1	1				
7	6KA–45214–00	COVER, WATER INLET 1 GRILLE, ENTREE D'EAU 1	1	1				
8	6KA–45215–00	COVER, WATER INLET 2 GRILLE, ENTREE D'EAU 2	1	1				
9	90110–05039	BOLT, HEXAGON SOCKET HEAD BOULON, TETE HEXAGONALE CREUSE	1	1				
10	6CE–45224–00	COVER, WATER INLET 3 GRILLE, ENTREE D'EAU 3	1	1				
11	6CE–45225–00	COVER, WATER INLET 4 GRILLE, ENTREE D'EAU 4	1	1				
12	90185–05002	.NUT, NYLON .ECROU,AUTO-BLOQUANT	1	1				
13	90110–05039	BOLT, HEXAGON SOCKET HEAD BOULON, TETE HEXAGONALE CREUSE	1	1				
14	6KA–45254–00	COVER, OUTLET 1 COUVERCLE, SORTIE 1	1	1				
15	6KA–45255–00	COVER, OUTLET 2 COUVERCLE, SORTIE 2	1	1				
16	90185–05002	.NUT, NYLON .ECROU,AUTO-BLOQUANT	1	1				
17	91380–05020	BOLT BOULON	1	1				
18	6CE–45373–00	ANODE ANODE	1	1				
19	90105–10M00	BOLT, FLANGE BOULON, A COLLERETTE	1	1				
20	69J–45987–00	SPACER 1 ENTRETOISE 1	1	1				
21	688–45997–01	SPACER 2 ENTRETOISE 2	1	1				
22	92990–18200	WASHER RONDELLE, PLATE	1	1				
23	90171–18M04	NUT, CASTLE ECROU, CRENELE	1	1				
24	91490–40030	PIN. COTTER GOUPILLE	1	1				
25	60H–45970–00	PROPELLER (3X14-1/4"X14"-M) HELICE (3X14-1/4"X14"-M)	1	1				UR SDS 3 BLADE UR SDS 3 BLADE
	60H–45972–00	PROPELLER (3X14-1/4"X16"-M) HELICE (3X14-1/4"X16"-M)	1	1				UR SDS 3 BLADE UR SDS 3 BLADE
	60H–45974–00	PROPELLER (3X14-1/4"X18"-M) HELICE (3X14-1/4"X18"-M)	1	1				UR SDS 3 BLADE UR SDS 3 BLADE

FIG. 37 LOWER CASING & DRIVE 2 — BOITIER D'HELICE TRANSMISSION2

REGULAR ROTATION

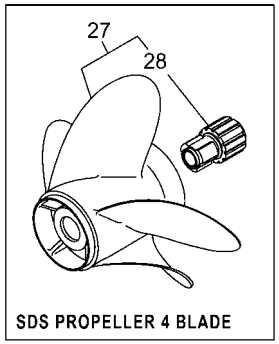

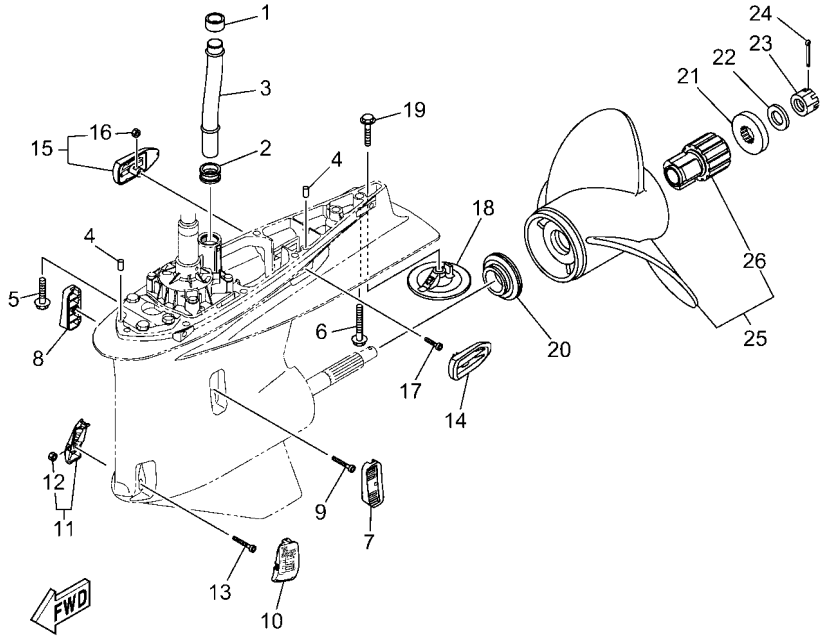

6KK5100-Z370

REF. NO.	PART NO. N° PIECES	DESCRIPTION DESCRIPTION	XCB	XCB2	NCB	NCB2		REMARKS REMARQUES
25	60H–45976–00	PROPELLER (3X14-1/4"X20"-M) HELICE (3X14-1/4"X20"-M)	1	1				UR SDS 3 BLADE UR SDS 3 BLADE
	60H–45978–00	PROPELLER (3X14-1/4"X22"-M) HELICE (3X14-1/4"X22"-M)	1	1				UR SDS 3 BLADE UR SDS 3 BLADE
	6CE–45930–20	PROPELLER (3X15-3/4"X13"-T) HELICE (3X15-3/4"X13"-T)	1	1				UR SDS 3 BLADE UR SDS 3 BLADE
	6CE–45D70–20	PROPELLER (3X15-3/4"X14"-T) HELICE (3X15-3/4"X14"-T)	1	1				UR SDS 3 BLADE UR SDS 3 BLADE
	6CE–45976–20	PROPELLER (3X15-3/4"X15"-T) HELICE (3X15-3/4"X15"-T)	1	1				UR SDS 3 BLADE UR SDS 3 BLADE
	6CE–45938–20	PROPELLER (3X15-1/2"X16"-T) HELICE (3X15-1/2"X16"-T)	1	1				UR SDS 3 BLADE UR SDS 3 BLADE
	6CE–45978–20	PROPELLER (3X15-1/2"X17"-T) HELICE (3X15-1/2"X17"-T)	1	1				UR SDS 3 BLADE UR SDS 3 BLADE
	6CE–45934–20	PROPELLER (3X15-1/4"X18"-T) HELICE (3X15-1/4"X18"-T)	1	1				UR SDS 3 BLADE UR SDS 3 BLADE
	6CE–45970–20	PROPELLER (3X15-1/4"X19"-T) HELICE (3X15-1/4"X19"-T)	1	1				UR SDS 3 BLADE UR SDS 3 BLADE
	6CE–45932–20	PROPELLER (3X15"X20"-T) HELICE (3X15"X20"-T)	1	1				UR SDS 3 BLADE UR SDS 3 BLADE
	6CE–45972–20	PROPELLER (3X15"X21"-T) HELICE (3X15"X21"-T)	1	1				UR SDS 3 BLADE UR SDS 3 BLADE
	6CE–45936–20	PROPELLER (3X14-3/4"X22"-T) HELICE (3X14-3/4"X22"-T)	1	1				UR SDS 3 BLADE UR SDS 3 BLADE
	6CE–45974–20	PROPELLER (3X14-3/4"X23"-T) HELICE (3X14-3/4"X23"-T)	1	1				UR SDS 3 BLADE UR SDS 3 BLADE
	6CE–45D72–20	PROPELLER (3X14-3/4"X24"-T) HELICE (3X14-3/4"X24"-T)	1	1				UR SDS 3 BLADE UR SDS 3 BLADE
	6CE–45D74–20	PROPELLER (3X14-3/4"X25"-T) HELICE (3X14-3/4"X25"-T)	1	1				UR SDS 3 BLADE UR SDS 3 BLADE
	68F–45932–20	PROPELLER (3X14-1/2"X13"-M) HELICE (3X14-1/2"X13"-M)	1	1				UR SDS 3 BLADE UR SDS 3 BLADE
	68F–45930–20	PROPELLER (3X14-1/2"X14"-M) HELICE (3X14-1/2"X14"-M)	1	1				UR SDS 3 BLADE UR SDS 3 BLADE
	68F–45970–20	PROPELLER (3X14-1/2"X15"-M) HELICE (3X14-1/2"X15"-M)	1	1				UR SDS 3 BLADE UR SDS 3 BLADE
	68F–45972–20	PROPELLER (3X14-1/4"X17"-M) HELICE (3X14-1/4"X17"-M)	1	1				UR SDS 3 BLADE UR SDS 3 BLADE
	68F–45978–20	PROPELLER (3X14-1/4"X18"-M) HELICE (3X14-1/4"X18"-M)	1	1				UR SDS 3 BLADE UR SDS 3 BLADE
	68F–45974–20	PROPELLER (3X13-3/4"X19"-M) HELICE (3X13-3/4"X19"-M)	1	1				UR SDS 3 BLADE UR SDS 3 BLADE
	68F–45976–20	PROPELLER (3X13-3/4"X21"-M) HELICE (3X13-3/4"X21"-M)	1	1				UR SDS 3 BLADE UR SDS 3 BLADE
	6KA–45970–00	PROPELLER (3X15-1/4"X18"-T) HELICE (3X15-1/4"X18"-T)	1	1				UR SDS 3 BLADE UR SDS 3 BLADE
	6KA–45972–00	PROPELLER (3X15-1/4"X19"-T) HELICE (3X15-1/4"X19"-T)	1	1				UR SDS 3 BLADE UR SDS 3 BLADE
	6KA–45974–00	PROPELLER (3X15"X20"-T) HELICE (3X15"X20"-T)	1	1				UR SDS 3 BLADE UR SDS 3 BLADE
	6KA–45976–00	PROPELLER (3X15"X21"-T) HELICE (3X15"X21"-T)	1	1				UR SDS 3 BLADE UR SDS 3 BLADE
26	6CE–45C81–10	.DAMPER RUBBER, PROPELLER 1 .AMORTISSEUR HELICE 1	1	1				

FIG. 37 LOWER CASING & DRIVE 2 — BOITIER D'HELICE TRANSMISSION2

REGULAR ROTATION

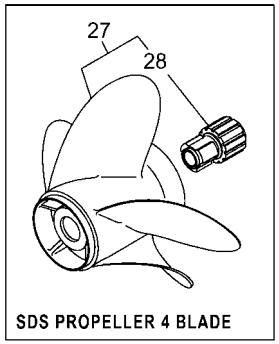

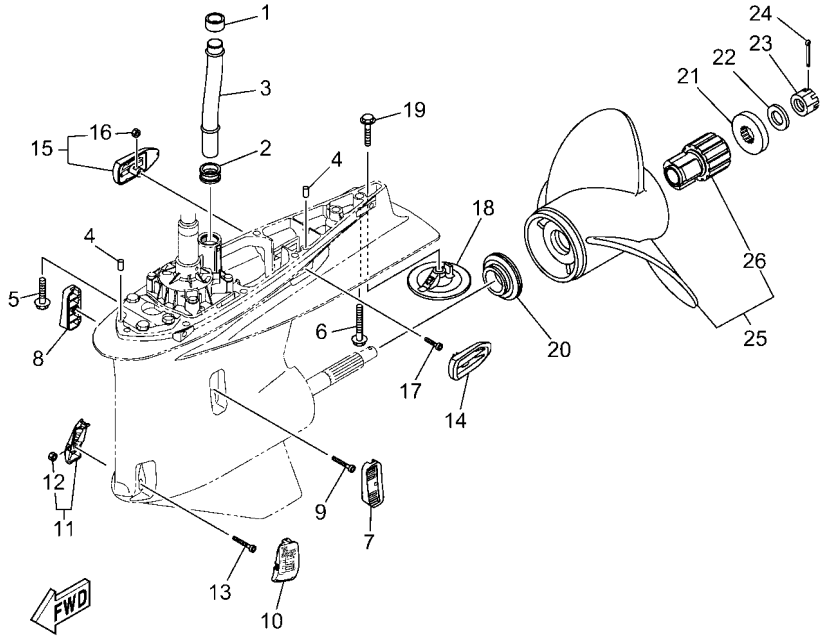

6KK5100-Z370

REF. NO.	PART NO. N° PIECES	DESCRIPTION DESCRIPTION	XCB	XCB2	NCB	NCB2		REMARKS REMARQUES
27	6CE–45B70–20	PROPELLER (4X15"X21"-T) HELICE (4X15"X21"-T)	1	1				UR SDS 4 BLADE UR SDS 4 BLADE
	6CE–45B72–20	PROPELLER (4X15"X22"-T) HELICE (4X15"X22"-T)	1	1				UR SDS 4 BLADE UR SDS 4 BLADE
	6CE–45B74–20	PROPELLER (4X15"X23"-T) HELICE (4X15"X23"-T)	1	1				UR SDS 4 BLADE UR SDS 4 BLADE
	6ML–45B70–00	PROPELLER (4X15-1/4"X18"-T) HELICE (4X15-1/4"X18"-T)	1	1				UR SDS 4 BLADE UR SDS 4 BLADE
	6ML–45B72–00	PROPELLER (4X15-1/4"X19"-T) HELICE (4X15-1/4"X19"-T)	1	1				UR SDS 4 BLADE UR SDS 4 BLADE
	6ML–45B74–00	PROPELLER (4X15-1/4"X20"-T) HELICE (4X15-1/4"X20"-T)	1	1				UR SDS 4 BLADE UR SDS 4 BLADE
	6ML–45B76–00	PROPELLER (4X15"X21"-T) HELICE (4X15"X21"-T)	1	1				UR SDS 4 BLADE UR SDS 4 BLADE
	6ML–45B78–00	PROPELLER (4X15"X22"-T) HELICE (4X15"X22"-T)	1	1				UR SDS 4 BLADE UR SDS 4 BLADE
	6ML–45B80–00	PROPELLER (4X15"X23"-T) HELICE (4X15"X23"-T)	1	1				UR SDS 4 BLADE UR SDS 4 BLADE
	6ML–45B82–00	PROPELLER (4X15"X24"-T) HELICE (4X15"X24"-T)	1	1				UR SDS 4 BLADE UR SDS 4 BLADE
	6ML–45B84–00	PROPELLER (4X15"X25"-T) HELICE (4X15"X25"-T)	1	1				UR SDS 4 BLADE UR SDS 4 BLADE
	6ML–45B86–00	PROPELLER (4X15"X26"-T) HELICE (4X15"X26"-T)	1	1				UR SDS 4 BLADE UR SDS 4 BLADE
28	6CE–45C81–10	.DAMPER RUBBER, PROPELLER 1 .AMORTISSEUR HELICE 1	1	1				

FIG. 38 STEERING GUIDE — FIXATION DE DIRECTION

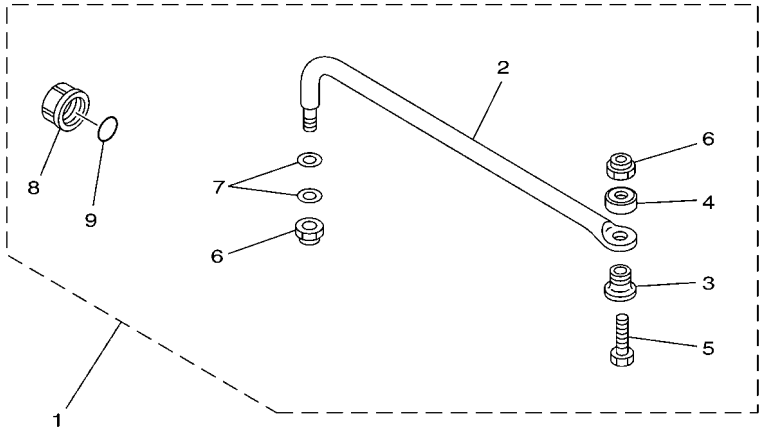

67H0100-9290

REF. NO.	PART NO. N° PIECES	DESCRIPTION DESCRIPTION	XCB	XCB2	NCB	NCB2		REMARKS REMARQUES
1	6E5–61350–02	STEERING GUIDE ATTACHMENT KIT FIXATIONS DE DIRECTION	1	1	1	1		AP AP
2	6E5–61351–01	.ROD, STEERING LINK .RENVOI DE DIRECTION	1	1	1	1		
3	90387–10M61	.COLLAR .COLLERETTE	1	1	1	1		
4	90560–12M01	.SPACER .ENTRETOISE	1	1	1	1		
5	6E5–61355–00	.BOLT .BOULON	1	1	1	1		
6	90185–09M01	.NUT, SELF-LOCKING .ECROU,AUTO-BLOQUANT	2	2	2	2		
7	90201–10M20	.WASHER, PLATE .RONDELLE, PLATE	2	2	2	2		
8	6E5–43145–01	.CAP, CLAMP BRACKET .CAPUCHON, PRESSE	1	1	1	1		
9	93210–16275	.O-RING .JOINT TORIQUE	1	1	1	1		

FIG. 39 OPTIONAL PARTS 1 — PIECES OPTIONNELLES 1

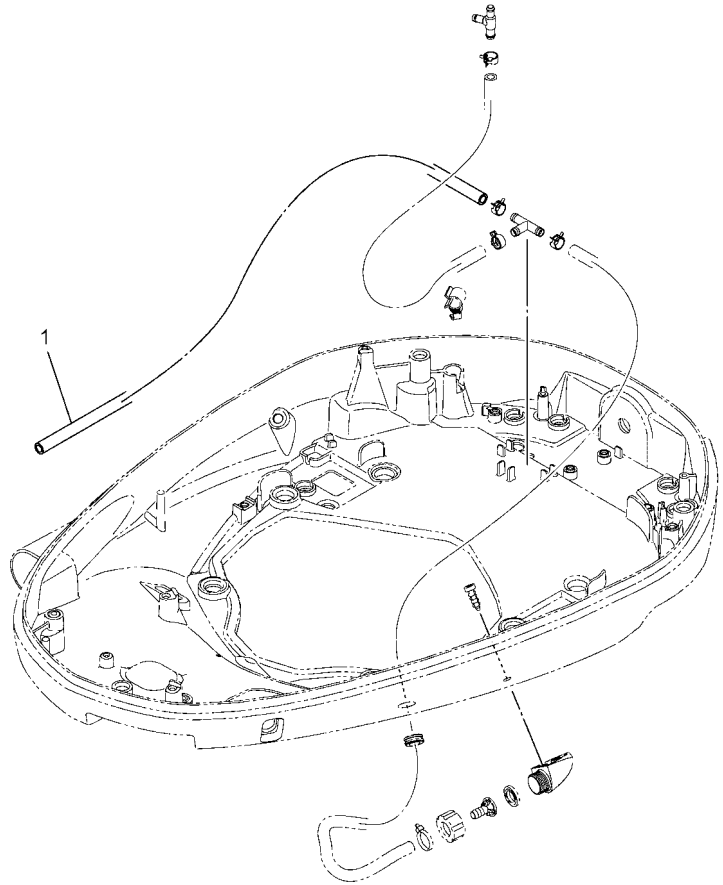

6KK6100-1390

REF. NO.	PART NO. N° PIECES	DESCRIPTION DESCRIPTION	XCB	XCB2	NCB	NCB2		REMARKS REMARQUES
1	6KA–44385–00	HOSE, WATER 1 TUBE D'EAU 1	1	1	1	1		

FIG. 40 OPTIONAL PARTS 2 — PIECES OPTIONNELLES 2

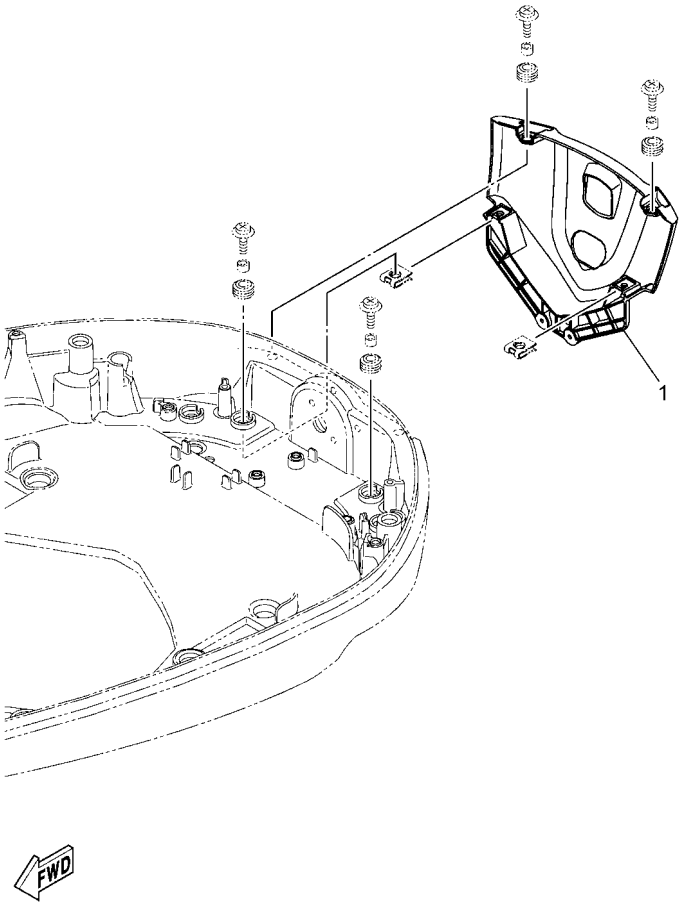

6ML1100-Y400

REF. NO.	PART NO. N° PIECES	DESCRIPTION DESCRIPTION	XCB	XCB2	NCB	NCB2		REMARKS REMARQUES
1	6KA–42723–10–8D	COVER, BOTTOM COUVERCLE	1		1			GRAY GRAY
	6KA–42723–10–CE	COVER, BOTTOM COUVERCLE		1		1		WHITE WHITE

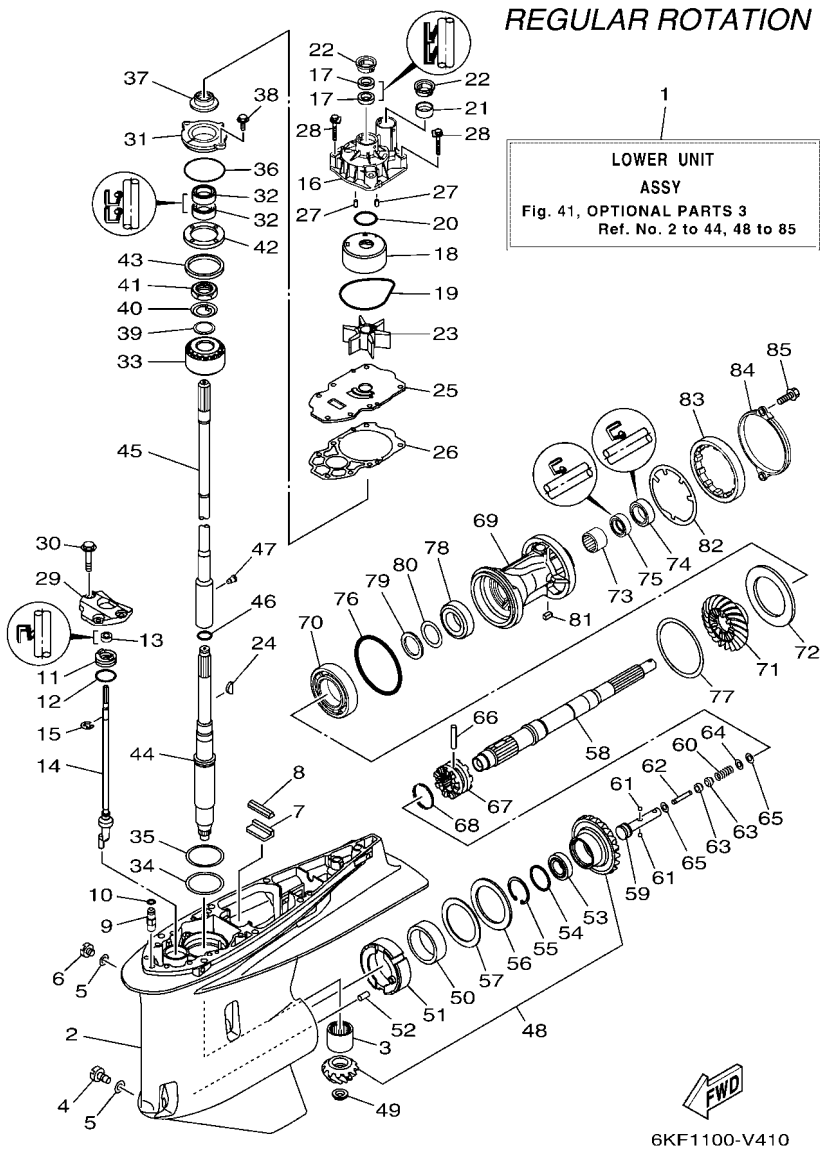

FIG. 41 OPTIONAL PARTS 3 — PIECES OPTIONNELLES 3

REF. NO.	PART NO. N° PIECES	DESCRIPTION DESCRIPTION	XCB	XCB2	NCB	NCB2		REMARKS REMARQUES
1	6ML–45300–00–8D	LOWER UNIT ASSY UNITE INFERIEURE (ENS.)			1			GRAY, RH GRAY, RH
	6ML–45300–00–CE	LOWER UNIT ASSY UNITE INFERIEURE (ENS.)				1		WHITE, RH WHITE, RH
2	6KA–45301–00–8D	CASING, LOWER BEQUILLE			1			GRAY GRAY
	6KA–45301–00–CE	CASING, LOWER BEQUILLE				1		WHITE WHITE
3	93311–83280	BEARING ROULEMENT			1	1		
4	688–45341–10	PLUG, DRAIN BOUCHON DE VIDANGE			1	1		
5	90430–08003	GASKET JOINT			2	2		
6	90340–08002	PLUG, STRAIGHT SCREW PLOT, FILETE DROIT			1	1		
7	663–45376–00	GUIDE, SEAL DAMPER BUTEE, JOINT CAOUTCHOUC			1	1		
8	6CE–45375–00	DAMPER, SEAL BOURRELET, CAOUTCHOUC			1	1		
9	63P–45378–00	NIPPLE, HOSE RACCORD, TUYAU			1	1		
10	93210–07003	O-RING JOINT TORIQUE			1	1		
11	6CE–45321–20	PLATE PLAQUETTE			1	1		
12	93210–33M49	O-RING JOINT TORIQUE			1	1		
13	93106–10001	OIL SEAL JOINT SPY			1	1		
14	6KA–44150–00	SHIFT CAM ASSY CAME D'INVERSION			1	1		
15	99001–09600	CIRCLIP CIRCLIP			1	1		
16	6CE–44311–01	HOUSING, WATER PUMP CORPS, POMPE A EAU			1	1		
17	93104–22M07	OIL SEAL JOINT SPY			2	2		
18	6AW–44322–00	INSERT, CARTRIDGE CUVETTE			1	1		
19	93210–94003	O-RING JOINT TORIQUE			1	1		
20	93210–37160	O-RING JOINT TORIQUE			1	1		
21	6AW–44365–01	DAMPER, WATER SEAL 1 JOINT, TUBE D'EAU 1			1	1		
22	6AW–44312–00	COVER, WATER PUMP HOUSING COUVERCLE			2	2		
23	6CE–44352–00	IMPELLER TURBINE			1	1		
24	90280–04002	KEY, WOODRUFF CLAVETTE, DEMI-LUNE			1	1		
25	6CE–44323–01	OUTER PLATE, CARTRIDGE PLAQUE EXTERIEURE			1	1		

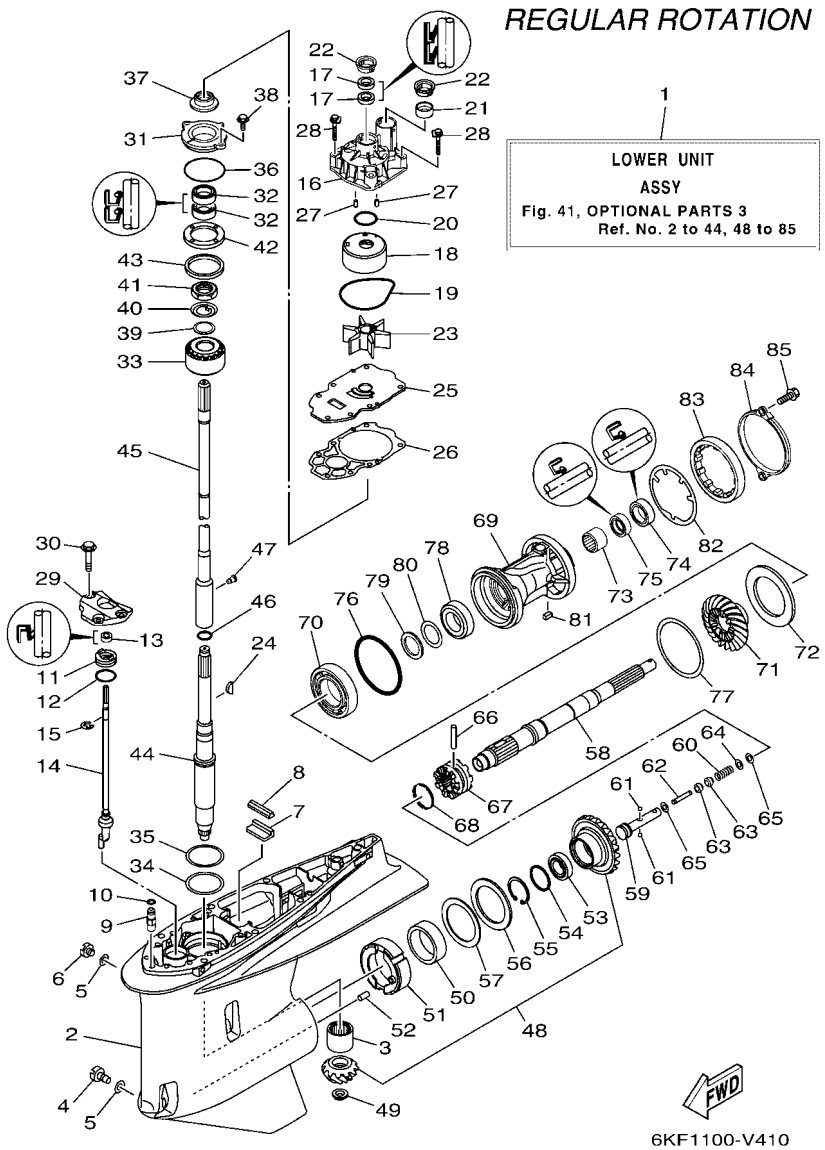

FIG. 41 OPTIONAL PARTS 3 — PIECES OPTIONNELLES 3

REF. NO.	PART NO. N° PIECES	DESCRIPTION DESCRIPTION	XCB	XCB2	NCB	NCB2		REMARKS REMARQUES
26	6CE–44315–00	GASKET, WATER PUMP JOINT, POMPE A EAU			1	1		
27	93606–12019	PIN, DOWEL GOUPILLE			2	2		
28	90119–08191	BOLT, WITH WASHER BOULON, AVEC RONDELLE			4	4		
29	6CB–44312–00	COVER, WATER PUMP HOUSING COUVERCLE			1	1		
30	90119–08180	BOLT, WITH WASHER BOULON, AVEC RONDELLE			3	3		
31	6AW–45335–00–CA	HOUSING, OIL SEAL LOGEMENT DE JOINT SPY			1	1		
32	93101–28019	OIL SEAL JOINT SPY			2	2		
33	93399–99962	BEARING ROULEMENT			1	1		
34	90201–68008	WASHER, PLATE RONDELLE, PLATE			1	1		
35	6AW–45587–00	SHIM (T:0.10MM) CALE (T:0.10MM)			1	1		UR UR
	6AW–45587–10	SHIM (T:0.12MM) CALE (T:0.12MM)			1	1		UR UR
	6AW–45587–20	SHIM (T:0.15MM) CALE (T:0.15MM)			1	1		UR UR
	6AW–45587–30	SHIM (T:0.18MM) CALE (T:0.18MM)			1	1		UR UR
	6AW–45587–40	SHIM (T:0.30MM) CALE (T:0.30MM)			1	1		UR UR
	6AW–45587–50	SHIM (T:0.40MM) CALE (T:0.40MM)			1	1		UR UR
	6AW–45587–60	SHIM (T:0.50MM) CALE (T:0.50MM)			1	1		UR UR
36	93210–69MG6	O-RING JOINT TORIQUE			1	1		
37	6KA–45344–00	COVER, OIL SEAL FLASQE, JOINT D'HUILE			1	1		
38	97E95–08520	BOLT, HEXAGON W/W DEEP RECESS VIS HEXAGONAL AVC RONDELLE			2	2		
39	90201–301U7	WASHER, PLATE RONDELLE, PLATE			1	1		
40	90214–30003	WASHER, CLAW RONDELLE, A GRIFFES			1	1		
41	90170–30M18	NUT ECROU			1	1		
42	6AW–45244–00	NUT ECROU			1	1		
43	6T5–45539–00	SPACER 2 ENTRETOISE 2			1	1		
44	6KA–45501–00	DRIVE SHAFT COMP. ARBRE MOTEUR COMP.			1	1		
45	6KF–45802–00	INTERMEDI. DRIVE SHAFT COMP. INTERMEDI. ARBRE MOTEUR COMP			1	1		UR X(25.3") UR X(25.3")
	6KF–45802–10	INTERMEDI. DRIVE SHAFT COMP. INTERMEDI. ARBRE MOTEUR COMP			1	1		UR U(30.3") UR U(30.3")

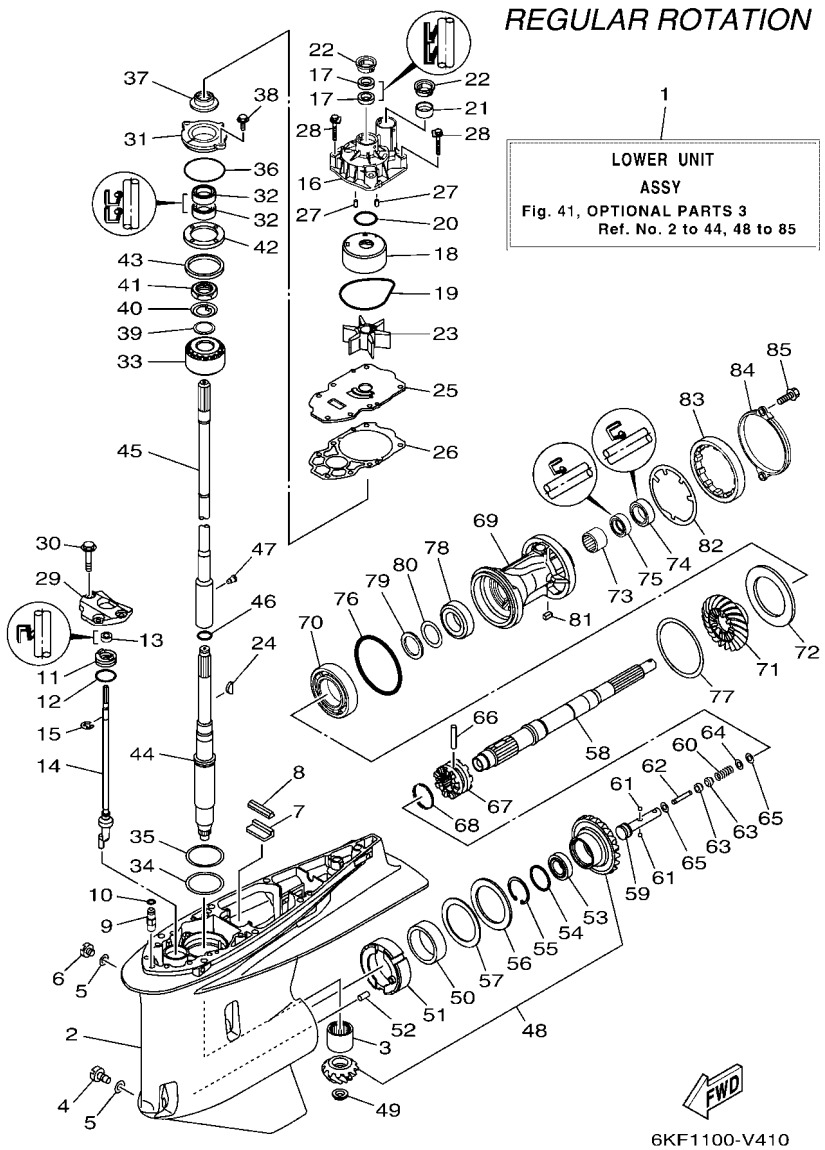

FIG. 41 OPTIONAL PARTS 3 — PIECES OPTIONNELLES 3

REF. NO.	PART NO. N° PIECES	DESCRIPTION DESCRIPTION	XCB	XCB2	NCB	NCB2		REMARKS REMARQUES
45	6KF–45802–20	INTERMEDI. DRIVE SHAFT COMP. INTERMEDI. ARBRE MOTEUR COMP			1	1		UR E(35.3") UR E(35.3")
46	93210–22MF1	O-RING JOINT TORIQUE			1	1		
47	90149–05048	SCREW VIS			1	1		
48	6KA–45550–00	GEAR SET KIT, PIGNON			1	1		
49	90179–16017	NUT ECROU			1	1		
50	93311–85894	BEARING ROULEMENT			1	1		
51	6CB–45824–00	ADAPTER ADAPTATEUR			1	1		
52	93608–16M16	PIN, DOWEL AXE			1	1		
53	93332–000A4	BEARING ROULEMENT			1	1		
54	90201–41008	WASHER, PLATE RONDELLE, PLATE			1	1		
55	99009–47500	CIRCLIP CIRCLIP			1	1		
56	93340–67011	BEARING CERVEAUX DE DIRECTION			1	1		
57	6CB–45567–00	SHIM (T:2.00MM) CALE (T:2.00MM)			1	1		UR UR
	6CB–45567–10	SHIM (T:2.03MM) CALE (T:2.03MM)			1	1		UR UR
	6CB–45567–20	SHIM (T:2.06MM) CALE (T:2.06MM)			1	1		UR UR
	6CB–45567–30	SHIM (T:2.09MM) CALE (T:2.09MM)			1	1		UR UR
	6CB–45567–40	SHIM (T:2.12MM) CALE (T:2.12MM)			1	1		UR UR
	6CB–45567–50	SHIM (T:2.15MM) CALE (T:2.15MM)			1	1		UR UR
58	6CB–45611–00	SHAFT, PROPELLER ARBRE, HELICE			1	1		
59	6CB–45634–00	SLIDE, SHIFT CONTRE-POUSSOIR			1	1		
60	90501–10M77	SPRING, COMPRESSION RESSORT, COMPRESSION			1	1		
61	93501–04011	BALL BILLE			2	2		
62	6H1–45668–00	SHAFT, FREE 1 AXE 1			1	1		
63	61A–45635–00	PLUNGER, SHIFT POUSSOIR D'EMBRAYAGE			2	2		
64	90201–02M00	WASHER, PLATE RONDELLE, PLATE			1	1		
65	90183–02M03	NUT, SPRING ECROU, RESSORT			2	2		
66	90250–08M07	PIN, STRAIGHT GOUPILLE, DROITE			1	1		

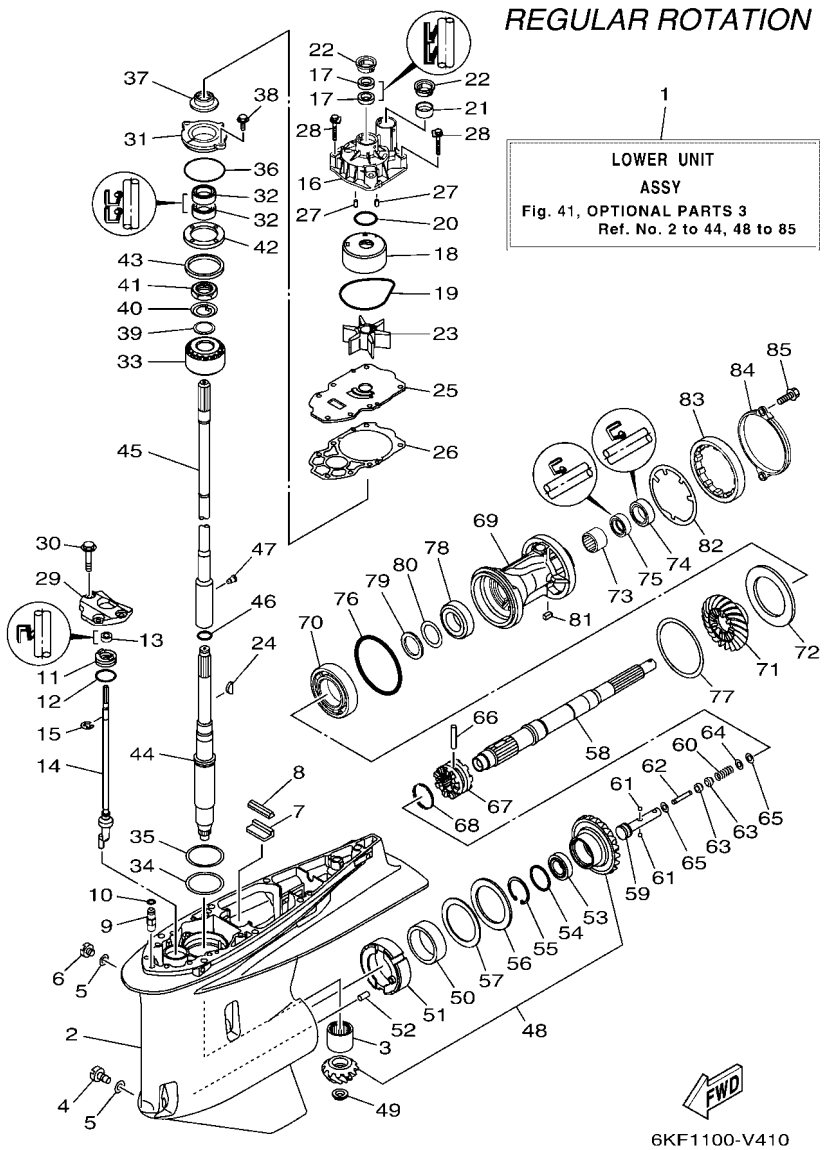

FIG. 41 OPTIONAL PARTS 3 — PIECES OPTIONNELLES 3

REF. NO.	PART NO. N° PIECES	DESCRIPTION DESCRIPTION	XCB	XCB2	NCB	NCB2		REMARKS REMARQUES
67	6ML–45631–00	CLUTCH, DOG CRABOT			1	1		
68	6E5–45633–01	RING, CROSS PIN JONC, GOUPILLE CRABOT			1	1		
69	6CE–45332–00–CA	HOUSING, BEARING FLASQUE, ROULEMENT			1	1		
70	93306–209U0	BEARING ROULEMENT			1	1		
71	6KA–45571–00	GEAR 2 (21T) PIGNON 2 (21T)			1	1		
72	6CB–45576–00	WASHER, THRUST 2 RONDELLE DE CALAGE 2			1	1		
73	93315–43061	BEARING ROULEMENT			1	1		
74	93101–30030	OIL SEAL JOINT SPY			1	1		
75	93101–30019	OIL SEAL JOINT SPY			1	1		
76	93211–02001	O-RING JOINT TORIQUE			1	1		
77	6CB–45577–00	SHIM (T:0.10MM) CALE (T:0.10MM)			1	1		UR UR
	6CB–45577–10	SHIM (T:0.12MM) CALE (T:0.12MM)			1	1		UR UR
	6CB–45577–20	SHIM (T:0.15MM) CALE (T:0.15MM)			1	1		UR UR
	6CB–45577–30	SHIM (T:0.18MM) CALE (T:0.18MM)			1	1		UR UR
	6CB–45577–40	SHIM (T:0.30MM) CALE (T:0.30MM)			1	1		UR UR
	6CB–45577–50	SHIM (T:0.40MM) CALE (T:0.40MM)			1	1		UR UR
	6CB–45577–60	SHIM (T:0.50MM) CALE (T:0.50MM)			1	1		UR UR
78	93332–000A5	BEARING ROULEMENT			1	1		
79	90201–32008	WASHER, PLATE RONDELLE, PLATE			1	1		
80	676–45567–00	SHIM (T:0.7MM) CALE			1	1		UR UR
	676–45567–10	SHIM (T:0.8MM) CALE			1	1		UR UR
	676–45567–20	SHIM (T:0.9MM) CALE			1	1		UR UR
	676–45567–30	SHIM (T:1.0MM) CALE			1	1		UR UR
	676–45567–40	SHIM (T:1.1MM) CALE			1	1		UR UR
	676–45567–50	SHIM (T:1.2MM) CALE			1	1		UR UR
81	90282–05008	KEY, STRAIGHT CLAVETTE, DROITE			1	1		
82	6CB–45383–00	WASHER, CLAW FREIN D'ECROU			1	1		

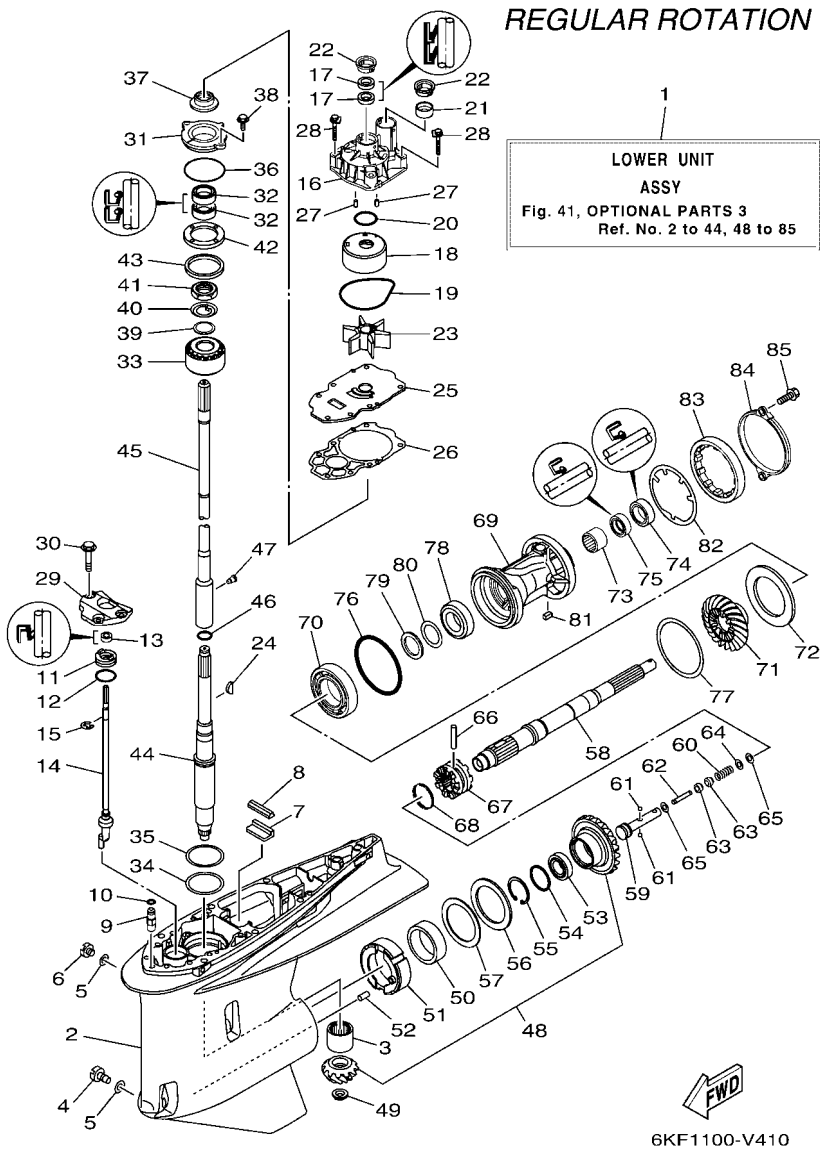

FIG. 41 OPTIONAL PARTS 3 — PIECES OPTIONNELLES 3

REF. NO.	PART NO. N° PIECES	DESCRIPTION DESCRIPTION	XCB	XCB2	NCB	NCB2		REMARKS REMARQUES
83	6CB–45384–00	NUT ECROU			1	1		
84	6CE–45361–10	CAP, LOWER CASING COUVERCLE, BOITIER D'HELICE			1	1		
85	90105–08M61	BOLT, FLANGE BOULON, A COLLERETTE			2	2		

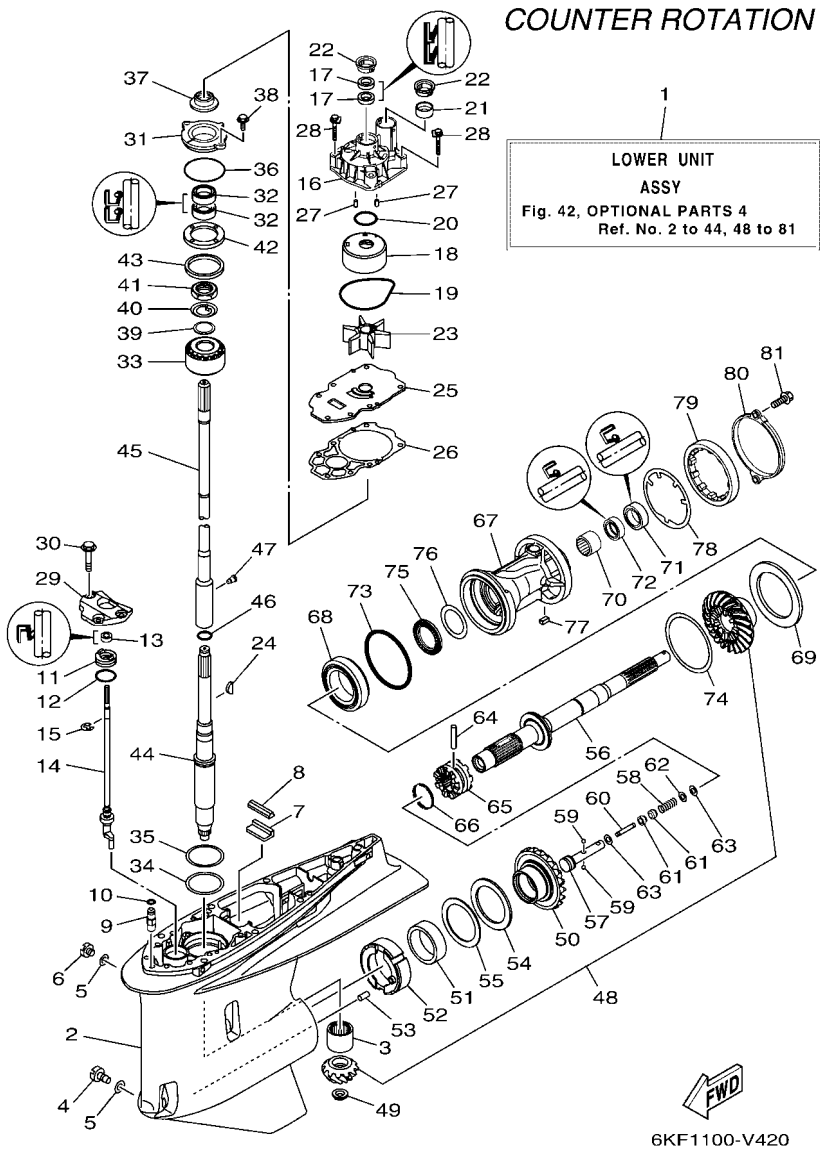

FIG. 42 OPTIONAL PARTS 4 — PIECES OPTIONNELLES 4

REF. NO.	PART NO. N° PIECES	DESCRIPTION DESCRIPTION	XCB	XCB2	NCB	NCB2		REMARKS REMARQUES
1	6MM–45300–00–8D	LOWER UNIT ASSY UNITE INFERIEURE (ENS.)			1			GRAY, LH GRAY, LH
	6MM–45300–00–CE	LOWER UNIT ASSY UNITE INFERIEURE (ENS.)				1		WHITE, LH WHITE, LH
2	6KA–45301–00–8D	CASING, LOWER BEQUILLE			1			GRAY GRAY
	6KA–45301–00–CE	CASING, LOWER BEQUILLE				1		WHITE WHITE
3	93311–83280	BEARING ROULEMENT			1	1		
4	688–45341–10	PLUG, DRAIN BOUCHON DE VIDANGE			1	1		
5	90430–08003	GASKET JOINT			2	2		
6	90340–08002	PLUG, STRAIGHT SCREW PLOT, FILETE DROIT			1	1		
7	663–45376–00	GUIDE, SEAL DAMPER BUTEE, JOINT CAOUTCHOUC			1	1		
8	6CE–45375–00	DAMPER, SEAL BOURRELET, CAOUTCHOUC			1	1		
9	63P–45378–00	NIPPLE, HOSE RACCORD, TUYAU			1	1		
10	93210–07003	O-RING JOINT TORIQUE			1	1		
11	6CE–45321–20	PLATE PLAQUETTE			1	1		
12	93210–33M49	O-RING JOINT TORIQUE			1	1		
13	93106–10001	OIL SEAL JOINT SPY			1	1		
14	6KB–44150–00	SHIFT CAM ASSY CAME D'INVERSION			1	1		
15	99001–09600	CIRCLIP CIRCLIP			1	1		
16	6CE–44311–01	HOUSING, WATER PUMP CORPS, POMPE A EAU			1	1		
17	93104–22M07	OIL SEAL JOINT SPY			2	2		
18	6AW–44322–00	INSERT, CARTRIDGE CUVETTE			1	1		
19	93210–94003	O-RING JOINT TORIQUE			1	1		
20	93210–37160	O-RING JOINT TORIQUE			1	1		
21	6AW–44365–01	DAMPER, WATER SEAL 1 JOINT, TUBE D'EAU 1			1	1		
22	6AW–44312–00	COVER, WATER PUMP HOUSING COUVERCLE			2	2		
23	6CE–44352–00	IMPELLER TURBINE			1	1		
24	90280–04002	KEY, WOODRUFF CLAVETTE, DEMI-LUNE			1	1		
25	6CE–44323–01	OUTER PLATE, CARTRIDGE PLAQUE EXTERIEURE			1	1		

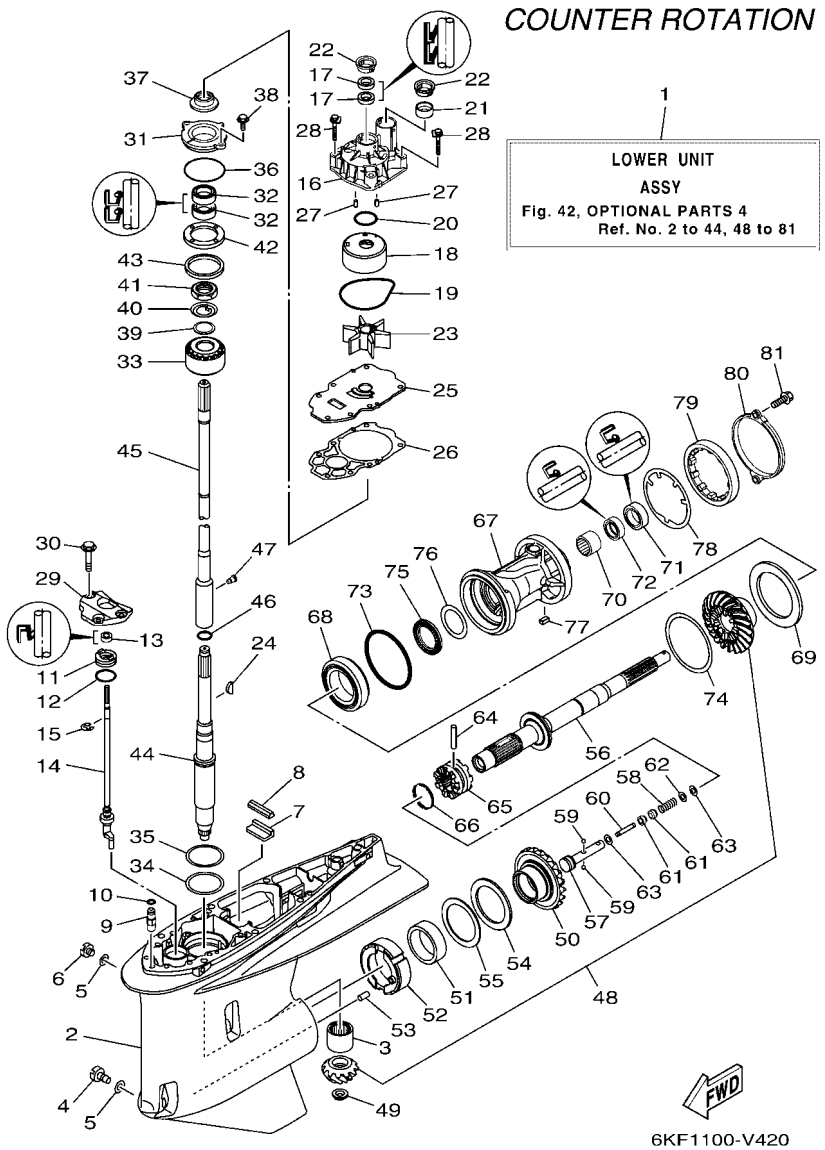

FIG. 42 OPTIONAL PARTS 4 — PIECES OPTIONNELLES 4

REF. NO.	PART NO. N° PIECES	DESCRIPTION DESCRIPTION	XCB	XCB2	NCB	NCB2		REMARKS REMARQUES
26	6CE–44315–00	GASKET, WATER PUMP JOINT, POMPE A EAU			1	1		
27	93606–12019	PIN, DOWEL GOUPILLE			2	2		
28	90119–08191	BOLT, WITH WASHER BOULON, AVEC RONDELLE			4	4		
29	6CB–44312–00	COVER, WATER PUMP HOUSING COUVERCLE			1	1		
30	90119–08180	BOLT, WITH WASHER BOULON, AVEC RONDELLE			3	3		
31	6AW–45335–00–CA	HOUSING, OIL SEAL LOGEMENT DE JOINT SPY			1	1		
32	93101–28019	OIL SEAL JOINT SPY			2	2		
33	93399–99962	BEARING ROULEMENT			1	1		
34	90201–68008	WASHER, PLATE RONDELLE, PLATE			1	1		
35	6AW–45587–00	SHIM (T:0.10MM) CALE (T:0.10MM)			1	1		UR UR
	6AW–45587–10	SHIM (T:0.12MM) CALE (T:0.12MM)			1	1		UR UR
	6AW–45587–20	SHIM (T:0.15MM) CALE (T:0.15MM)			1	1		UR UR
	6AW–45587–30	SHIM (T:0.18MM) CALE (T:0.18MM)			1	1		UR UR
	6AW–45587–40	SHIM (T:0.30MM) CALE (T:0.30MM)			1	1		UR UR
	6AW–45587–50	SHIM (T:0.40MM) CALE (T:0.40MM)			1	1		UR UR
	6AW–45587–60	SHIM (T:0.50MM) CALE (T:0.50MM)			1	1		UR UR
36	93210–69MG6	O-RING JOINT TORIQUE			1	1		
37	6KA–45344–00	COVER, OIL SEAL FLASQE, JOINT D'HUILE			1	1		
38	97E95–08520	BOLT, HEXAGON W/W DEEP RECESS VIS HEXAGONAL AVC RONDELLE			2	2		
39	90201–301U7	WASHER, PLATE RONDELLE, PLATE			1	1		
40	90214–30003	WASHER, CLAW RONDELLE, A GRIFFES			1	1		
41	90170–30M18	NUT ECROU			1	1		
42	6AW–45244–00	NUT ECROU			1	1		
43	6T5–45539–00	SPACER 2 ENTRETOISE 2			1	1		
44	6KA–45501–00	DRIVE SHAFT COMP. ARBRE MOTEUR COMP.			1	1		
45	6KF–45802–00	INTERMEDI. DRIVE SHAFT COMP. INTERMEDI. ARBRE MOTEUR COMP			1	1		UR X(25.3") UR X(25.3")
	6KF–45802–10	INTERMEDI. DRIVE SHAFT COMP. INTERMEDI. ARBRE MOTEUR COMP			1	1		UR U(30.3") UR U(30.3")

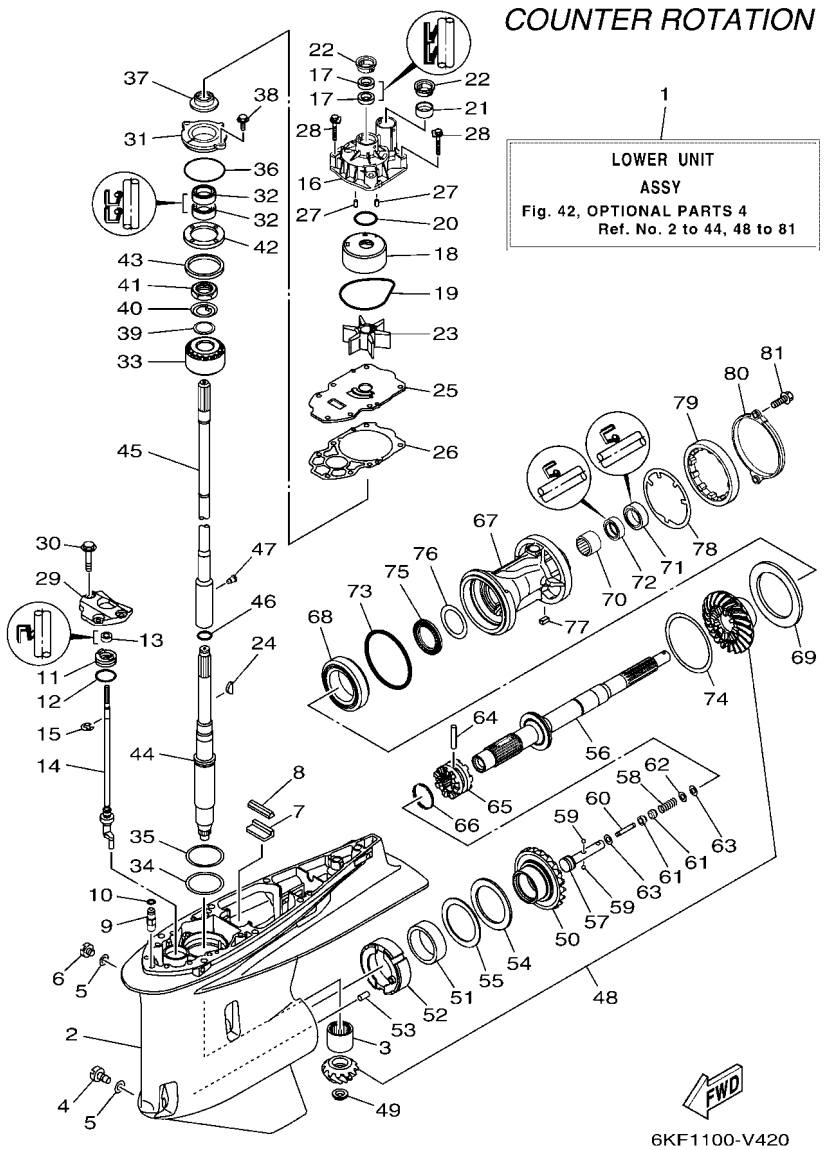

FIG. 42 OPTIONAL PARTS 4 — PIECES OPTIONNELLES 4

REF. NO.	PART NO. N° PIECES	DESCRIPTION DESCRIPTION	XCB	XCB2	NCB	NCB2		REMARKS REMARQUES
45	6KF–45802–20	INTERMEDI. DRIVE SHAFT COMP. INTERMEDI. ARBRE MOTEUR COMP			1	1		UR E(35.3") UR E(35.3")
46	93210–22MF1	O-RING JOINT TORIQUE			1	1		
47	90149–05048	SCREW VIS			1	1		
48	6KB–45550–00	GEAR SET KIT, PIGNON			1	1		
49	90179–16017	NUT ECROU			1	1		
50	6KB–45560–00	GEAR 1 (21T) PIGNON 1 (21T)			1	1		
51	93311–85894	BEARING ROULEMENT			1	1		
52	6CB–45824–00	ADAPTER ADAPTATEUR			1	1		
53	93608–16M16	PIN, DOWEL AXE			1	1		
54	93340–67011	BEARING CERVEAUX DE DIRECTION			1	1		
55	6CB–45567–00	SHIM (T:2.00MM) CALE (T:2.00MM)			1	1		UR UR
	6CB–45567–10	SHIM (T:2.03MM) CALE (T:2.03MM)			1	1		UR UR
	6CB–45567–20	SHIM (T:2.06MM) CALE (T:2.06MM)			1	1		UR UR
	6CB–45567–30	SHIM (T:2.09MM) CALE (T:2.09MM)			1	1		UR UR
	6CB–45567–40	SHIM (T:2.12MM) CALE (T:2.12MM)			1	1		UR UR
	6CB–45567–50	SHIM (T:2.15MM) CALE (T:2.15MM)			1	1		UR UR
56	6KB–45611–00	SHAFT, PROPELLER ARBRE, HELICE			1	1		
57	6CB–45634–00	SLIDE, SHIFT CONTRE-POUSSOIR			1	1		
58	90501–10M77	SPRING, COMPRESSION RESSORT, COMPRESSION			1	1		
59	93501–04011	BALL BILLE			2	2		
60	6H1–45668–00	SHAFT, FREE 1 AXE 1			1	1		
61	61A–45635–00	PLUNGER, SHIFT POUSSOIR D'EMBRAYAGE			2	2		
62	90201–02M00	WASHER, PLATE RONDELLE, PLATE			1	1		
63	90183–02M03	NUT, SPRING ECROU, RESSORT			2	2		
64	90250–08M07	PIN, STRAIGHT GOUPILLE, DROITE			1	1		
65	6ML–45631–00	CLUTCH, DOG CRABOT			1	1		
66	6E5–45633–01	RING, CROSS PIN JONC, GOUPILLE CRABOT			1	1		

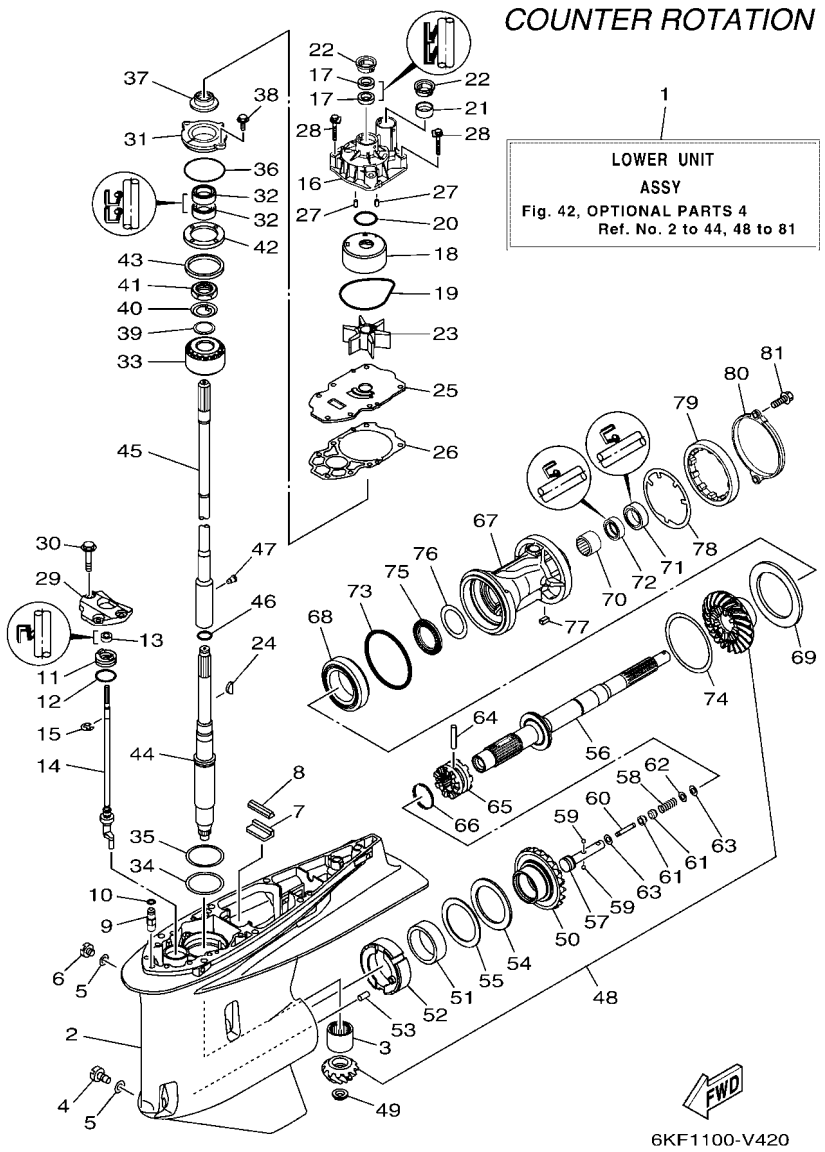

FIG. 42 OPTIONAL PARTS 4 — PIECES OPTIONNELLES 4

REF. NO.	PART NO. N° PIECES	DESCRIPTION DESCRIPTION	XCB	XCB2	NCB	NCB2		REMARKS REMARQUES
67	6CF–45332–01–CA	HOUSING, BEARING FLASQUE, ROULEMENT			1	1		
68	93332–00048	BEARING ROULEMENT			1	1		
69	6CF–45576–00	WASHER, THRUST 2 RONDELLE DE CALAGE 2			1	1		
70	93315–43061	BEARING ROULEMENT			1	1		
71	93101–30030	OIL SEAL JOINT SPY			1	1		
72	93101–30019	OIL SEAL JOINT SPY			1	1		
73	93211–02001	O-RING JOINT TORIQUE			1	1		
74	6CB–45577–00	SHIM (T:0.10MM) CALE (T:0.10MM)			1	1		UR UR
	6CB–45577–10	SHIM (T:0.12MM) CALE (T:0.12MM)			1	1		UR UR
	6CB–45577–20	SHIM (T:0.15MM) CALE (T:0.15MM)			1	1		UR UR
	6CB–45577–30	SHIM (T:0.18MM) CALE (T:0.18MM)			1	1		UR UR
	6CB–45577–40	SHIM (T:0.30MM) CALE (T:0.30MM)			1	1		UR UR
	6CB–45577–50	SHIM (T:0.40MM) CALE (T:0.40MM)			1	1		UR UR
	6CB–45577–60	SHIM (T:0.50MM) CALE (T:0.50MM)			1	1		UR UR
75	93341–440U5	BEARING CERVEAUX DE DIRECTION			1	1		
76	6K1–45578–01	SHIM (T:0.10MM) CALE (T:0.10MM)			1	1		UR UR
	6K1–45578–10	SHIM (T:0.12MM) CALE (T:0.12MM)			1	1		UR UR
	6K1–45578–20	SHIM (T:0.15MM) CALE (T:0.15MM)			1	1		UR UR
	6K1–45578–30	SHIM (T:0.18MM) CALE (T:0.18MM)			1	1		UR UR
	6K1–45578–40	SHIM (T:0.30MM) CALE (T:0.30MM)			1	1		UR UR
	6K1–45578–50	SHIM (T:0.40MM) CALE (T:0.40MM)			1	1		UR UR
	6K1–45578–60	SHIM (T:0.50MM) CALE (T:0.50MM)			1	1		UR UR
77	90282–05008	KEY, STRAIGHT CLAVETTE, DROITE			1	1		
78	6CB–45383–00	WASHER, CLAW FREIN D'ECROU			1	1		
79	6CB–45384–00	NUT ECROU			1	1		
80	6CE–45361–10	CAP, LOWER CASING COUVERCLE, BOITIER D'HELICE			1	1		
81	90105–08M61	BOLT, FLANGE BOULON, A COLLERETTE			2	2		

FIG. 43 OPTIONAL PARTS 5 — PIECES OPTIONNELLES 5

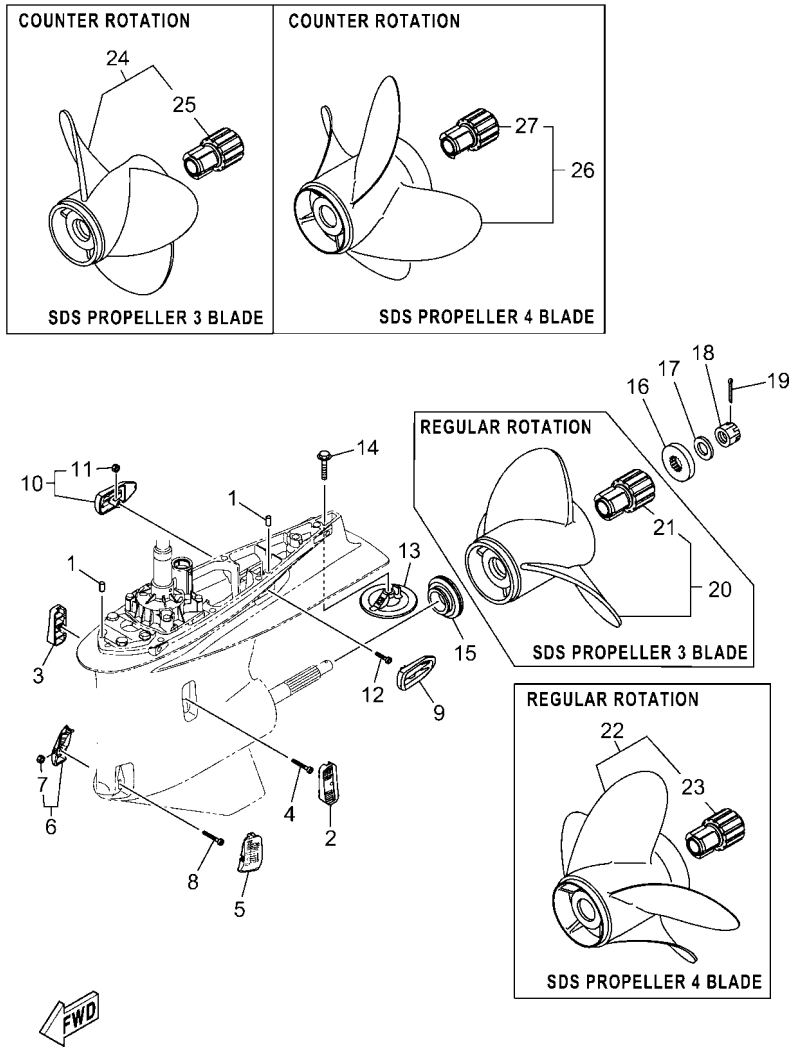

6KK5100-Z430

REF. NO.	PART NO. N° PIECES	DESCRIPTION DESCRIPTION	XCB	XCB2	NCB	NCB2		REMARKS REMARQUES
1	93608–16M16	PIN, DOWEL AXE			2	2		
2	6KA–45214–00	COVER, WATER INLET 1 GRILLE, ENTREE D'EAU 1			1	1		
3	6KA–45215–00	COVER, WATER INLET 2 GRILLE, ENTREE D'EAU 2			1	1		
4	90110–05039	BOLT, HEXAGON SOCKET HEAD BOULON, TETE HEXAGONALE CREUSE			1	1		
5	6CE–45224–00	COVER, WATER INLET 3 GRILLE, ENTREE D'EAU 3			1	1		
6	6CE–45225–00	COVER, WATER INLET 4 GRILLE, ENTREE D'EAU 4			1	1		
7	90185–05002	.NUT, NYLON .ECROU,AUTO-BLOQUANT			1	1		
8	90110–05039	BOLT, HEXAGON SOCKET HEAD BOULON, TETE HEXAGONALE CREUSE			1	1		
9	6KA–45254–00	COVER, OUTLET 1 COUVERCLE, SORTIE 1			1	1		
10	6KA–45255–00	COVER, OUTLET 2 COUVERCLE, SORTIE 2			1	1		
11	90185–05002	.NUT, NYLON .ECROU,AUTO-BLOQUANT			1	1		
12	91380–05020	BOLT BOULON			1	1		
13	6CE–45373–00	ANODE ANODE			1	1		
14	90105–10M00	BOLT, FLANGE BOULON, A COLLERETTE			1	1		
15	69J–45987–00	SPACER 1 ENTRETOISE 1			1	1		
16	688–45997–01	SPACER 2 ENTRETOISE 2			1	1		
17	92990–18200	WASHER RONDELLE, PLATE			1	1		
18	90171–18M04	NUT, CASTLE ECROU, CRENELE			1	1		
19	91490–40030	PIN. COTTER GOUPILLE			1	1		
20	60H–45970–00	PROPELLER (3X14-1/4"X14"-M) HELICE (3X14-1/4"X14"-M)			1	1		UR RH SDS 3 BLADE UR RH SDS 3 BLADE
	60H–45972–00	PROPELLER (3X14-1/4"X16"-M) HELICE (3X14-1/4"X16"-M)			1	1		UR RH SDS 3 BLADE UR RH SDS 3 BLADE
	60H–45974–00	PROPELLER (3X14-1/4"X18"-M) HELICE (3X14-1/4"X18"-M)			1	1		UR RH SDS 3 BLADE UR RH SDS 3 BLADE
	60H–45976–00	PROPELLER (3X14-1/4"X20"-M) HELICE (3X14-1/4"X20"-M)			1	1		UR RH SDS 3 BLADE UR RH SDS 3 BLADE
	60H–45978–00	PROPELLER (3X14-1/4"X22"-M) HELICE (3X14-1/4"X22"-M)			1	1		UR RH SDS 3 BLADE UR RH SDS 3 BLADE
	6CE–45930–20	PROPELLER (3X15-3/4"X13"-T) HELICE (3X15-3/4"X13"-T)			1	1		UR RH SDS 3 BLADE UR RH SDS 3 BLADE
	6CE–45D70–20	PROPELLER (3X15-3/4"X14"-T) HELICE (3X15-3/4"X14"-T)			1	1		UR RH SDS 3 BLADE UR RH SDS 3 BLADE
	6CE–45976–20	PROPELLER (3X15-3/4"X15"-T) HELICE (3X15-3/4"X15"-T)			1	1		UR RH SDS 3 BLADE UR RH SDS 3 BLADE

FIG. 43 OPTIONAL PARTS 5 — PIECES OPTIONNELLES 5

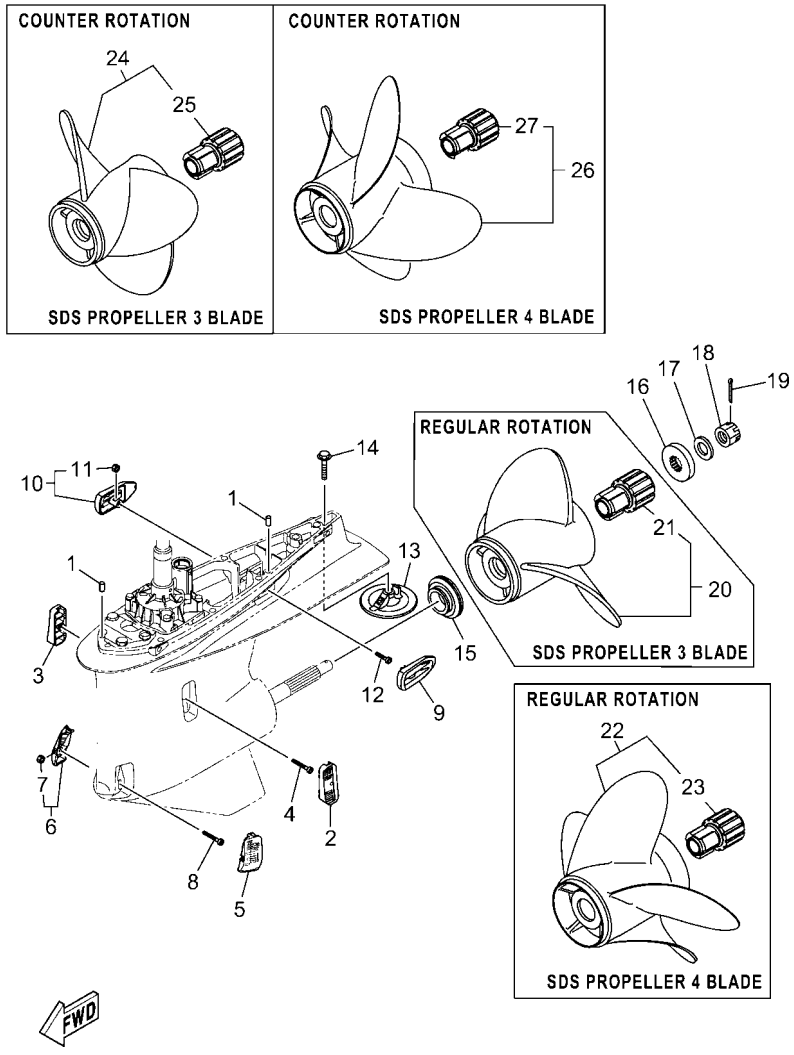

REF. NO.	PART NO. N° PIECES	DESCRIPTION DESCRIPTION	XCB	XCB2	NCB	NCB2		REMARKS REMARQUES
20	6CE–45938–20	PROPELLER (3X15-1/2"X16"-T) HELICE (3X15-1/2"X16"-T)			1	1		UR RH SDS 3 BLADE UR RH SDS 3 BLADE
	6CE–45978–20	PROPELLER (3X15-1/2"X17"-T) HELICE (3X15-1/2"X17"-T)			1	1		UR RH SDS 3 BLADE UR RH SDS 3 BLADE
	6CE–45934–20	PROPELLER (3X15-1/4"X18"-T) HELICE (3X15-1/4"X18"-T)			1	1		UR RH SDS 3 BLADE UR RH SDS 3 BLADE
	6CE–45970–20	PROPELLER (3X15-1/4"X19"-T) HELICE (3X15-1/4"X19"-T)			1	1		UR RH SDS 3 BLADE UR RH SDS 3 BLADE
	6CE–45932–20	PROPELLER (3X15"X20"-T) HELICE (3X15"X20"-T)			1	1		UR RH SDS 3 BLADE UR RH SDS 3 BLADE
	6CE–45972–20	PROPELLER (3X15"X21"-T) HELICE (3X15"X21"-T)			1	1		UR RH SDS 3 BLADE UR RH SDS 3 BLADE
	6CE–45936–20	PROPELLER (3X14-3/4"X22"-T) HELICE (3X14-3/4"X22"-T)			1	1		UR RH SDS 3 BLADE UR RH SDS 3 BLADE
	6CE–45974–20	PROPELLER (3X14-3/4"X23"-T) HELICE (3X14-3/4"X23"-T)			1	1		UR RH SDS 3 BLADE UR RH SDS 3 BLADE
	6CE–45D72–20	PROPELLER (3X14-3/4"X24"-T) HELICE (3X14-3/4"X24"-T)			1	1		UR RH SDS 3 BLADE UR RH SDS 3 BLADE
	6CE–45D74–20	PROPELLER (3X14-3/4"X25"-T) HELICE (3X14-3/4"X25"-T)			1	1		UR RH SDS 3 BLADE UR RH SDS 3 BLADE
	68F–45932–20	PROPELLER (3X14-1/2"X13"-M) HELICE (3X14-1/2"X13"-M)			1	1		UR RH SDS 3 BLADE UR RH SDS 3 BLADE
	68F–45930–20	PROPELLER (3X14-1/2"X14"-M) HELICE (3X14-1/2"X14"-M)			1	1		UR RH SDS 3 BLADE UR RH SDS 3 BLADE
	68F–45970–20	PROPELLER (3X14-1/2"X15"-M) HELICE (3X14-1/2"X15"-M)			1	1		UR RH SDS 3 BLADE UR RH SDS 3 BLADE
	68F–45972–20	PROPELLER (3X14-1/4"X17"-M) HELICE (3X14-1/4"X17"-M)			1	1		UR RH SDS 3 BLADE UR RH SDS 3 BLADE
	68F–45978–20	PROPELLER (3X14-1/4"X18"-M) HELICE (3X14-1/4"X18"-M)			1	1		UR RH SDS 3 BLADE UR RH SDS 3 BLADE
	68F–45974–20	PROPELLER (3X13-3/4"X19"-M) HELICE (3X13-3/4"X19"-M)			1	1		UR RH SDS 3 BLADE UR RH SDS 3 BLADE
	68F–45976–20	PROPELLER (3X13-3/4"X21"-M) HELICE (3X13-3/4"X21"-M)			1	1		UR RH SDS 3 BLADE UR RH SDS 3 BLADE
	6KA–45970–00	PROPELLER (3X15-1/4"X18"-T) HELICE (3X15-1/4"X18"-T)			1	1		UR RH SDS 3 BLADE UR RH SDS 3 BLADE
	6KA–45972–00	PROPELLER (3X15-1/4"X19"-T) HELICE (3X15-1/4"X19"-T)			1	1		UR RH SDS 3 BLADE UR RH SDS 3 BLADE
	6KA–45974–00	PROPELLER (3X15"X20"-T) HELICE (3X15"X20"-T)			1	1		UR RH SDS 3 BLADE UR RH SDS 3 BLADE
	6KA–45976–00	PROPELLER (3X15"X21"-T) HELICE (3X15"X21"-T)			1	1		UR RH SDS 3 BLADE UR RH SDS 3 BLADE
21	6CE–45C81–10	.DAMPER RUBBER, PROPELLER 1 .AMORTISSEUR HELICE 1			1	1		
22	6CE–45B70–20	PROPELLER (4X15"X21"-T) HELICE (4X15"X21"-T)			1	1		UR RH SDS 4 BLADE UR RH SDS 4 BLADE
	6CE–45B72–20	PROPELLER (4X15"X22"-T) HELICE (4X15"X22"-T)			1	1		UR RH SDS 4 BLADE UR RH SDS 4 BLADE
	6CE–45B74–20	PROPELLER (4X15"X23"-T) HELICE (4X15"X23"-T)			1	1		UR RH SDS 4 BLADE UR RH SDS 4 BLADE
	6ML–45B70–00	PROPELLER (4X15-1/4"X18"-T) HELICE (4X15-1/4"X18"-T)			1	1		UR RH SDS 4 BLADE UR RH SDS 4 BLADE
	6ML–45B72–00	PROPELLER (4X15-1/4"X19"-T) HELICE (4X15-1/4"X19"-T)			1	1		UR RH SDS 4 BLADE UR RH SDS 4 BLADE

FIG. 43 OPTIONAL PARTS 5 — PIECES OPTIONNELLES 5

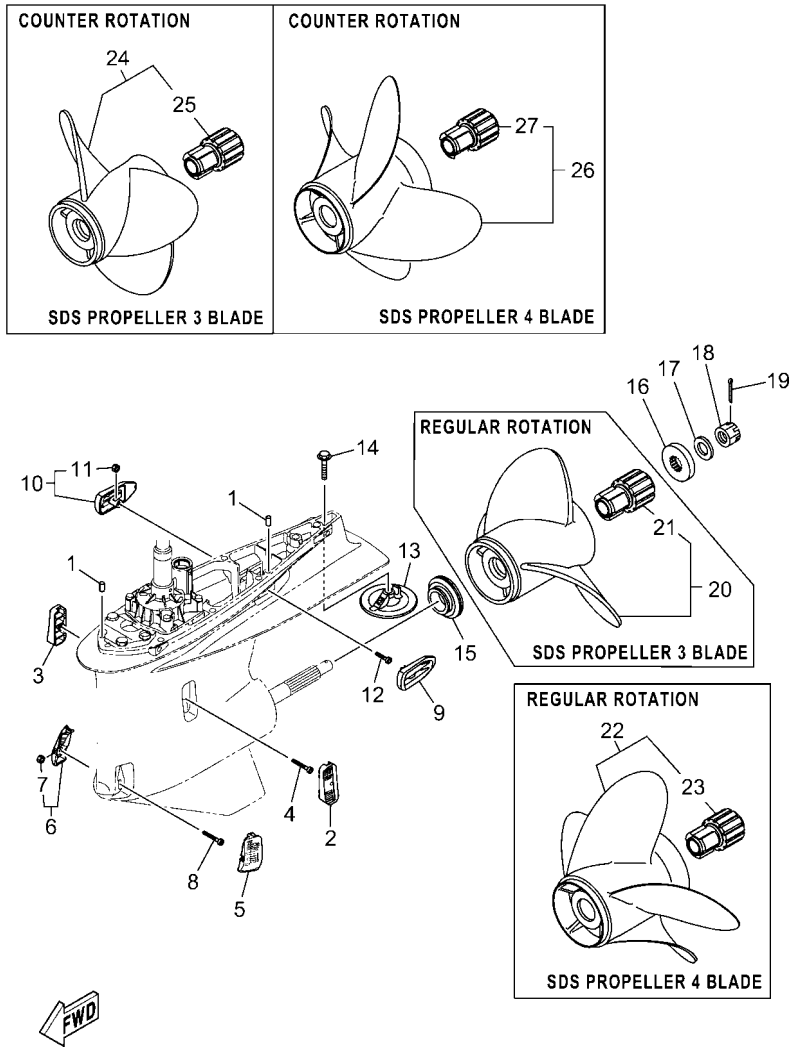

6KK5100-Z430

REF. NO.	PART NO. N° PIECES	DESCRIPTION DESCRIPTION	XCB	XCB2	NCB	NCB2		REMARKS REMARQUES
22	6ML–45B74–00	PROPELLER (4X15-1/4"X20"-T) HELICE (4X15-1/4"X20"-T)			1	1		UR RH SDS 4 BLADE UR RH SDS 4 BLADE
	6ML–45B76–00	PROPELLER (4X15"X21"-T) HELICE (4X15"X21"-T)			1	1		UR RH SDS 4 BLADE UR RH SDS 4 BLADE
	6ML–45B78–00	PROPELLER (4X15"X22"-T) HELICE (4X15"X22"-T)			1	1		UR RH SDS 4 BLADE UR RH SDS 4 BLADE
	6ML–45B80–00	PROPELLER (4X15"X23"-T) HELICE (4X15"X23"-T)			1	1		UR RH SDS 4 BLADE UR RH SDS 4 BLADE
	6ML–45B82–00	PROPELLER (4X15"X24"-T) HELICE (4X15"X24"-T)			1	1		UR RH SDS 4 BLADE UR RH SDS 4 BLADE
	6ML–45B84–00	PROPELLER (4X15"X25"-T) HELICE (4X15"X25"-T)			1	1		UR RH SDS 4 BLADE UR RH SDS 4 BLADE
	6ML–45B86–00	PROPELLER (4X15"X26"-T) HELICE (4X15"X26"-T)			1	1		UR RH SDS 4 BLADE UR RH SDS 4 BLADE
23	6CE–45C81–10	.DAMPER RUBBER, PROPELLER 1 .AMORTISSEUR HELICE 1			1	1		
24	60J–45970–00	PROPELLER (3X14-1/4"X14"-ML) HELICE (3X14-1/4"X14"-ML)			1	1		UR LH SDS 3 BLADE UR LH SDS 3 BLADE
	60J–45972–00	PROPELLER (3X14-1/4"X16"-ML) HELICE (3X14-1/4"X16"-ML)			1	1		UR LH SDS 3 BLADE UR LH SDS 3 BLADE
	60J–45974–00	PROPELLER (3X14-1/4"X18"-ML) HELICE (3X14-1/4"X18"-ML)			1	1		UR LH SDS 3 BLADE UR LH SDS 3 BLADE
	60J–45976–00	PROPELLER (3X14-1/4"X20"-ML) HELICE (3X14-1/4"X20"-ML)			1	1		UR LH SDS 3 BLADE UR LH SDS 3 BLADE
	60J–45978–00	PROPELLER (3X14-1/4"X22"-ML) HELICE (3X14-1/4"X22"-ML)			1	1		UR LH SDS 3 BLADE UR LH SDS 3 BLADE
	6CF–45930–20	PROPELLER (3X15-3/4"X13"-TL) HELICE (3X15-3/4"X13"-TL)			1	1		UR LH SDS 3 BLADE UR LH SDS 3 BLADE
	6CF–45D70–20	PROPELLER (3X15-3/4"X14"-TL) HELICE (3X15-3/4"X14"-TL)			1	1		UR LH SDS 3 BLADE UR LH SDS 3 BLADE
	6CF–45976–20	PROPELLER (3X15-3/4"X15"-TL) HELICE (3X15-3/4"X15"-TL)			1	1		UR LH SDS 3 BLADE UR LH SDS 3 BLADE
	6CF–45938–20	PROPELLER (3X15-1/2"X16"-TL) HELICE (3X15-1/2"X16"-TL)			1	1		UR LH SDS 3 BLADE UR LH SDS 3 BLADE
	6CF–45978–20	PROPELLER (3X15-1/2"X17"-TL) HELICE (3X15-1/2"X17"-TL)			1	1		UR LH SDS 3 BLADE UR LH SDS 3 BLADE
	6CF–45934–20	PROPELLER (3X15-1/4"X18"-TL) HELICE (3X15-1/4"X18"-TL)			1	1		UR LH SDS 3 BLADE UR LH SDS 3 BLADE
	6CF–45970–20	PROPELLER (3X15-1/4"X19"-TL) HELICE (3X15-1/4"X19"-TL)			1	1		UR LH SDS 3 BLADE UR LH SDS 3 BLADE
	6CF–45932–20	PROPELLER (3X15"X20"-TL) HELICE (3X15"X20"-TL)			1	1		UR LH SDS 3 BLADE UR LH SDS 3 BLADE
	6CF–45972–20	PROPELLER (3X15"X21"-TL) HELICE (3X15"X21"-TL)			1	1		UR LH SDS 3 BLADE UR LH SDS 3 BLADE
	6CF–45936–20	PROPELLER (3X14-3/4"X22"-TL) HELICE (3X14-3/4"X22"-TL)			1	1		UR LH SDS 3 BLADE UR LH SDS 3 BLADE
	6CF–45974–20	PROPELLER (3X14-3/4"X23"-TL) HELICE (3X14-3/4"X23"-TL)			1	1		UR LH SDS 3 BLADE UR LH SDS 3 BLADE
	68G–45930–20	PROPELLER (3X14-1/2"X14"-ML) HELICE (3X14-1/2"X14"-ML)			1	1		UR LH SDS 3 BLADE UR LH SDS 3 BLADE
	68G–45970–20	PROPELLER (3X14-1/2"X15"-ML) HELICE (3X14-1/2"X15"-ML)			1	1		UR LH SDS 3 BLADE UR LH SDS 3 BLADE
	68G–45972–20	PROPELLER (3X14-1/4"X17"-ML) HELICE (3X14-1/4"X17"-ML)			1	1		UR LH SDS 3 BLADE UR LH SDS 3 BLADE

FIG. 43 OPTIONAL PARTS 5 — PIECES OPTIONNELLES 5

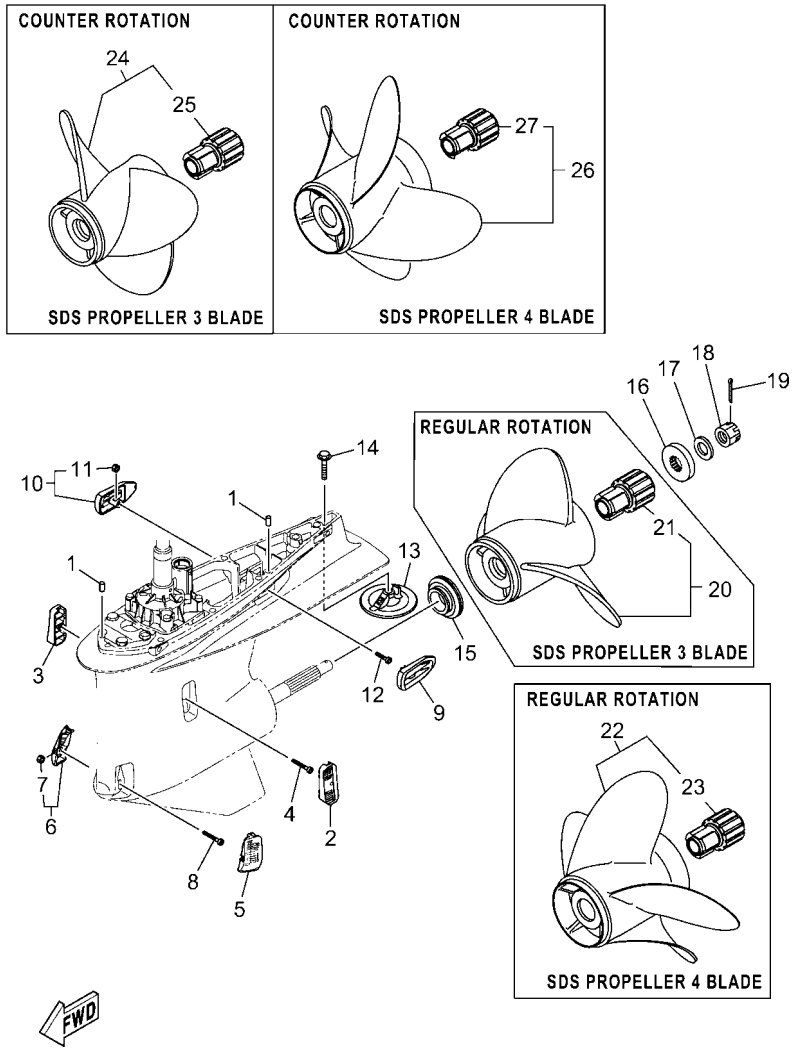

REF. NO.	PART NO. N° PIECES	DESCRIPTION DESCRIPTION	XCB	XCB2	NCB	NCB2		REMARKS REMARQUES
24	68G–45978–20	PROPELLER (3X14-1/4"X18"-ML) HELICE (3X14-1/4"X18"-ML)			1	1		UR LH SDS 3 BLADE UR LH SDS 3 BLADE
	68G–45974–20	PROPELLER (3X13-3/4"X19"-ML) HELICE (3X13-3/4"X19"-ML)			1	1		UR LH SDS 3 BLADE UR LH SDS 3 BLADE
	68G–45976–20	PROPELLER (3X13-3/4"X21"-ML) HELICE (3X13-3/4"X21"-ML)			1	1		UR LH SDS 3 BLADE UR LH SDS 3 BLADE
	6KB–45970–00	PROPELLER (3X15-1/4"X18"-TL) HELICE (3X15-1/4"X18"-TL)			1	1		UR LH SDS 3 BLADE UR LH SDS 3 BLADE
	6KB–45972–00	PROPELLER (3X15-1/4"X19"-TL) HELICE (3X15-1/4"X19"-TL)			1	1		UR LH SDS 3 BLADE UR LH SDS 3 BLADE
	6KB–45974–00	PROPELLER (3X15"X20"-TL) HELICE (3X15"X20"-TL)			1	1		UR LH SDS 3 BLADE UR LH SDS 3 BLADE
	6KB–45976–00	PROPELLER (3X15"X21"-TL) HELICE (3X15"X21"-TL)			1	1		UR LH SDS 3 BLADE UR LH SDS 3 BLADE
25	6CE–45C81–10	.DAMPER RUBBER, PROPELLER 1 .AMORTISSEUR HELICE 1			1	1		
26	6CF–45B70–20	PROPELLER (4X15"X21"-TL) HELICE (4X15"X21"-TL)			1	1		UR LH SDS 4 BLADE UR LH SDS 4 BLADE
	6CF–45B72–20	PROPELLER (4X15"X22"-TL) HELICE (4X15"X22"-TL)			1	1		UR LH SDS 4 BLADE UR LH SDS 4 BLADE
	6CF–45B74–20	PROPELLER (4X15"X23"-TL) HELICE (4X15"X23"-TL)			1	1		UR LH SDS 4 BLADE UR LH SDS 4 BLADE
	6MM–45B70–00	PROPELLER (4X15-1/4"X18"-TL) HELICE (4X15-1/4"X18"-TL)			1	1		UR LH SDS 4 BLADE UR LH SDS 4 BLADE
	6MM–45B72–00	PROPELLER (4X15-1/4"X19"-TL) HELICE (4X15-1/4"X19"-TL)			1	1		UR LH SDS 4 BLADE UR LH SDS 4 BLADE
	6MM–45B74–00	PROPELLER (4X15-1/4"X20"-TL) HELICE (4X15-1/4"X20"-TL)			1	1		UR LH SDS 4 BLADE UR LH SDS 4 BLADE
	6MM–45B76–00	PROPELLER (4X15"X21"-TL) HELICE (4X15"X21"-TL)			1	1		UR LH SDS 4 BLADE UR LH SDS 4 BLADE
	6MM–45B78–00	PROPELLER (4X15"X22"-TL) HELICE (4X15"X22"-TL)			1	1		UR LH SDS 4 BLADE UR LH SDS 4 BLADE
	6MM–45B80–00	PROPELLER (4X15"X23"-TL) HELICE (4X15"X23"-TL)			1	1		UR LH SDS 4 BLADE UR LH SDS 4 BLADE
	6MM–45B82–00	PROPELLER (4X15"X24"-TL) HELICE (4X15"X24"-TL)			1	1		UR LH SDS 4 BLADE UR LH SDS 4 BLADE
	6MM–45B84–00	PROPELLER (4X15"X25"-TL) HELICE (4X15"X25"-TL)			1	1		UR LH SDS 4 BLADE UR LH SDS 4 BLADE
	6MM–45B86–00	PROPELLER (4X15"X26"-TL) HELICE (4X15"X26"-TL)			1	1		UR LH SDS 4 BLADE UR LH SDS 4 BLADE
27	6CE–45C81–10	.DAMPER RUBBER, PROPELLER 1 .AMORTISSEUR HELICE 1			1	1		

FIG. 44 OPTIONAL PARTS 6 — PIECES OPTIONNELLES 6

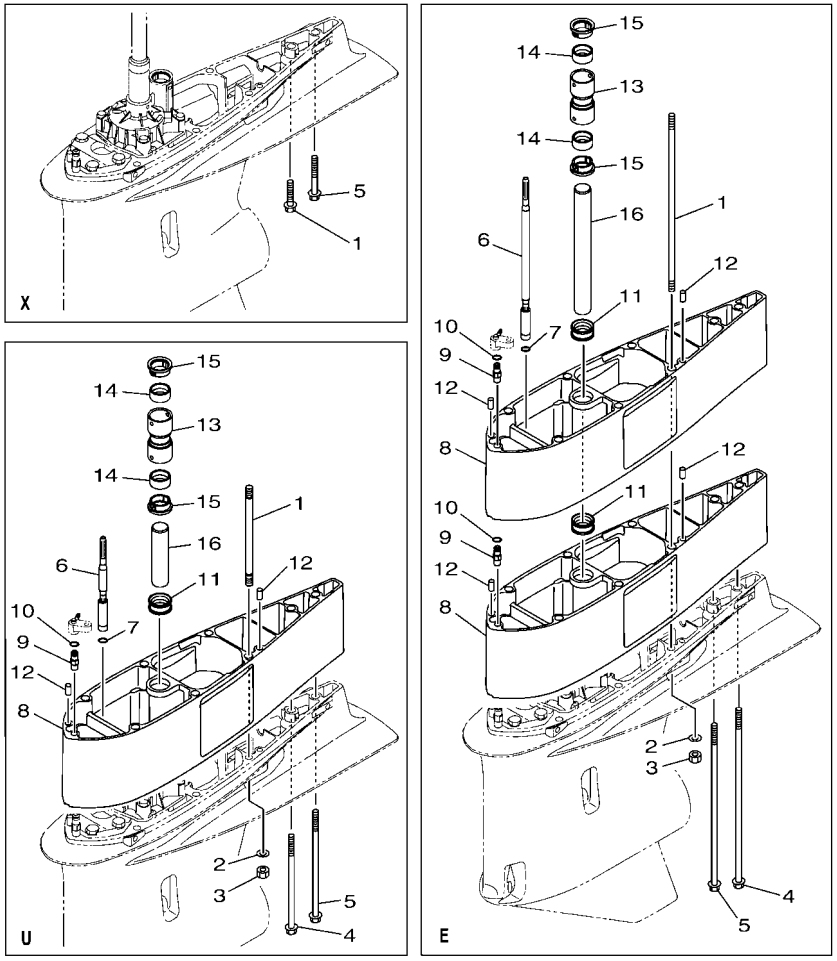

6KF1100-V440

REF. NO.	PART NO. N° PIECES	DESCRIPTION DESCRIPTION	XCB	XCB2	NCB	NCB2		REMARKS REMARQUES
1	90119–10024	BOLT, WITH WASHER BOULON, AVEC RONDELLE			7	7		UR X(25.3") UR X(25.3")
	90116–10067	BOLT, STUD GOUJON			6	6		UR U(30.3") UR U(30.3")
	90116–10066	BOLT, STUD GOUJON			6	6		UR E(35.3") UR E(35.3")
2	92995–10600	WASHER RONDELLE			6	6		U(30.3"),E(35.3") U(30.3"),E(35.3")
3	95380–10600	NUT ECROU			6	6		U(30.3"),E(35.3") U(30.3"),E(35.3")
4	90119–10009	BOLT, WITH WASHER BOULON, AVEC RONDELLE			1	1		UR U(30.3") UR U(30.3")
	90119–10061	BOLT, WITH WASHER BOULON, AVEC RONDELLE			1	1		UR E(35.3") UR E(35.3")
5	97E75–10570	BOLT, HEXAGON W/W DEEP RECESS VIS HEXAGONAL AVC RONDELLE			1	1		UR X(25.3") UR X(25.3")
	90119–10008	BOLT, WITH WASHER BOULON, AVEC RONDELLE			1	1		UR U(30.3") UR U(30.3")
	90119–10060	BOLT, WITH WASHER BOULON, AVEC RONDELLE			1	1		UR E(35.3") UR E(35.3")
6	6KA–44190–00	JT. SHIFT ROD COMP. JOINT, TRINGLE DE SELECTEUR CO			1	1		UR U(30.3") UR U(30.3")
	6KA–44190–10	JT. SHIFT ROD COMP. JOINT, TRINGLE DE SELECTEUR CO			1	1		UR E(35.3") UR E(35.3")
7	93210–09165	O-RING JOINT TORIQUE			1	1		U(30.3"),E(35.3") U(30.3"),E(35.3")
8	6CE–45211–10–8D	EXTENSION EXTENSION			1			UR GRAY, U(30.3") UR GRAY, U(30.3")
	6CE–45211–10–CE	EXTENSION EXTENSION				1		UR WHITE,U(30.3") UR WHITE,U(30.3")
	6CE–45211–10–8D	EXTENSION EXTENSION			2			UR GRAY, E(35.3") UR GRAY, E(35.3")
	6CE–45211–10–CE	EXTENSION EXTENSION				2		UR WHITE,E(35.3") UR WHITE,E(35.3")
9	63P–45378–00	NIPPLE, HOSE RACCORD, TUYAU			1	1		UR U(30.3") UR U(30.3")
	63P–45378–00	NIPPLE, HOSE RACCORD, TUYAU			2	2		UR E(35.3") UR E(35.3")
10	93210–07003	O-RING JOINT TORIQUE			1	1		UR U(30.3") UR U(30.3")
	93210–07003	O-RING JOINT TORIQUE			2	2		UR E(35.3") UR E(35.3")
11	6AW–44366–01	DAMPER, WATER SEAL 2 JOINT, TUBE D'EAU 2			1	1		UR U(30.3") UR U(30.3")
	6AW–44366–01	DAMPER, WATER SEAL 2 JOINT, TUBE D'EAU 2			2	2		UR E(35.3") UR E(35.3")
12	93608–16M16	PIN, DOWEL AXE			2	2		UR U(30.3") UR U(30.3")
	93608–16M16	PIN, DOWEL AXE			4	4		UR E(35.3") UR E(35.3")
13	6CE–44362–00	TUBE, WATER 2 TUBE D'EAU 2			1	1		U(30.3"),E(35.3") U(30.3"),E(35.3")
14	6AW–44365–01	DAMPER, WATER SEAL 1 JOINT, TUBE D'EAU 1			2	2		U(30.3"),E(35.3") U(30.3"),E(35.3")

FIG. 44 OPTIONAL PARTS 6 — PIECES OPTIONNELLES 6

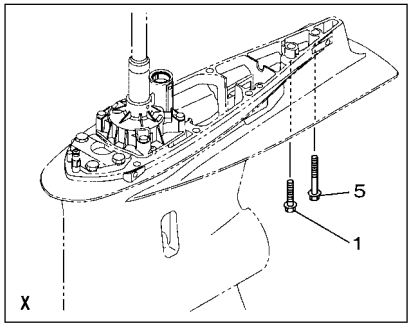

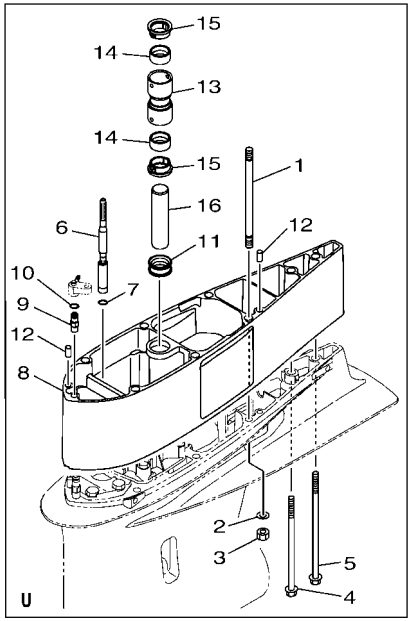

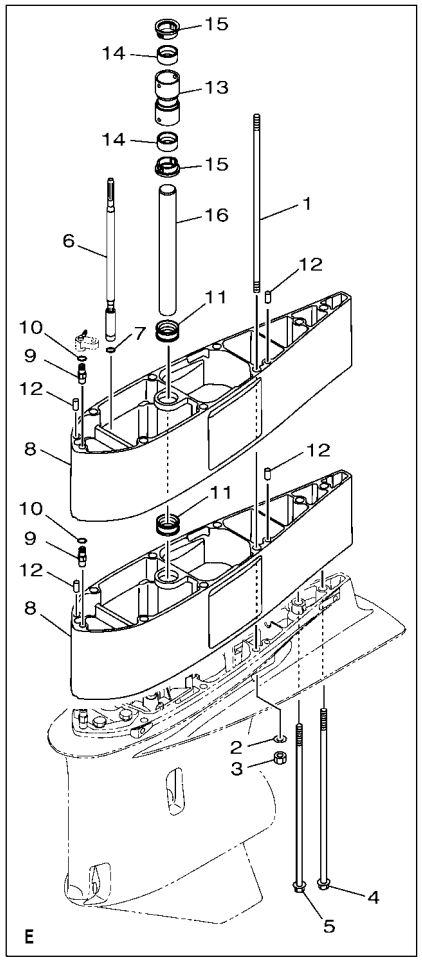

6KF1100-V440

REF. NO.	PART NO. N° PIECES	DESCRIPTION DESCRIPTION	XCB	XCB2	NCB	NCB2		REMARKS REMARQUES
15	6AW–44312–00	COVER, WATER PUMP HOUSING COUVERCLE			2	2		U(30.3"),E(35.3") U(30.3"),E(35.3")
16	6AW–44363–00	TUBE, WATER 3 TUBE D'EAU 3			1	1		UR U(30.3") UR U(30.3")
	6CE–44363–00	TUBE, WATER 3 TUBE D'EAU 3			1	1		UR E(35.3") UR E(35.3")

FIG. 45 OPTIONAL PARTS 7 — PIECES OPTIONNELLES 7

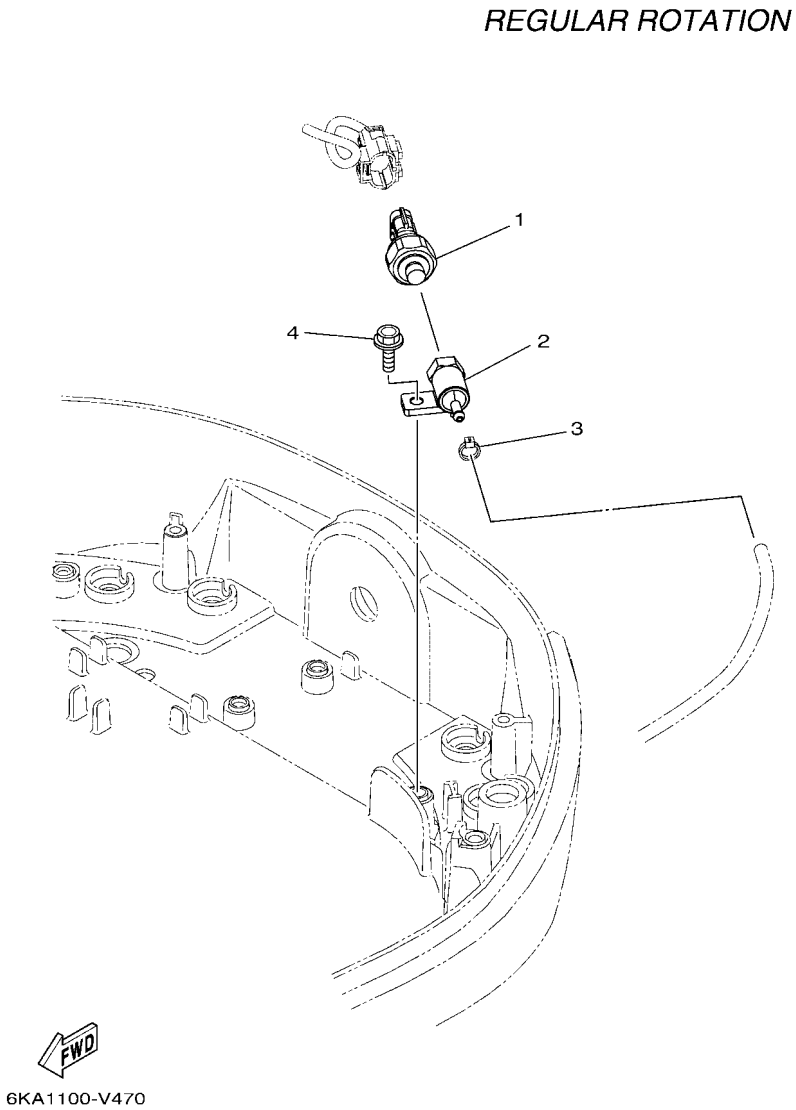

REF. NO.	PART NO. N° PIECES	DESCRIPTION DESCRIPTION	XCB	XCB2	NCB	NCB2		REMARKS REMARQUES
1	6AW–8366B–10	SENSOR, WATER PRESSURE SONDE DE PRESSION D'EAU			1	1		
2	60V–8366D–00	ADAPTOR, INPUT CONNECTEUR 3			1	1		
3	90465–11M10	CLAMP BRIDE			1	1		UR X(25.3") UR X(25.3")
	90465–11M10	CLAMP BRIDE			2	2		UR U(30.3") UR U(30.3")
	90465–11M10	CLAMP BRIDE			2	2		UR E(35.3") UR E(35.3")
4	97E95–06516	BOLT, HEXAGON W/W DEEP RECESS VIS HEXAGONAL AVC RONDELLE			1	1		

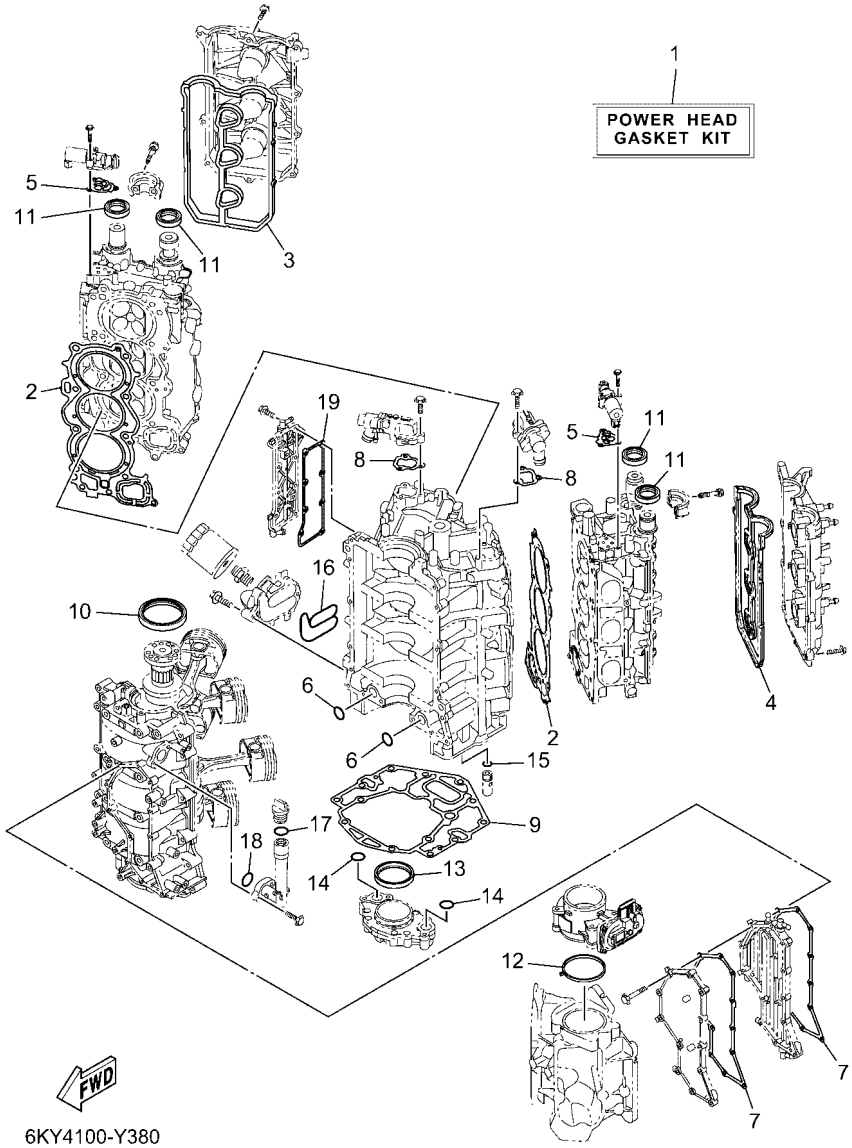

FIG. 46 REPAIR KIT 1 — KITS DE REPARATION 1

REF. NO.	PART NO. N° PIECES	DESCRIPTION DESCRIPTION	XCB	XCB2	NCB	NCB2		REMARKS REMARQUES
1	6CB–W0001–05	POWER HEAD GASKET KIT POCHETTE DE JINTS TETE MOTRICE	1	1	1	1		
2	6CB–11181–00	.GASKET, CYLINDER HEAD 1 .JOINT, DE CULASSE 1	2	2	2	2		
3	6CB–11193–00	.GASKET, HEAD COVER 1 .JOINT, COUVERCLE DE CULASSE 1	1	1	1	1		
4	6CB–11194–00	.GASKET, HEAD COVER 2 .JOINT, COUVERCLE DE CULASSE 2	1	1	1	1		
5	6CB–1242F–00	.GASKET, FILTER .JOINT, FILTRE	2	2	2	2		
6	93210–26658	.O-RING .JOINT TORIQUE	2	2	2	2		
7	6CB–15451–01	.GASKET, CRANKCASE COVER 1 .JOINT, COUVERCLE DE CARTER 1	2	2	2	2		
8	6CB–12427–11	.GASKET, HOUSING COVER 1 .JOINT, COUVERCLE DE CARTER 1	2	2	2	2		
9	6KA–11351–00	.GASKET, CYLINDER .JOINT, D'EMBASE	1	1	1	1		
10	93102–85008	.OIL SEAL .JOINT SPY	1	1	1	1		
11	93102–38008	.OIL SEAL .JOINT SPY	4	4	4	4		
12	6CB–13556–00	.GASKET, MANIFOLD .JOINT, TUBULURE	1	1	1	1		
13	6CB–11355–00	.SEAL, CYLINDER 1 .JOINT, SPY CYLINDRE	1	1	1	1		
14	93210–26658	.O-RING .JOINT TORIQUE	2	2	2	2		
15	6CB–13473–00	.O-RING .JOINT TORIQUE	1	1	1	1		
16	6CB–13477–00	.GASKET .JOINT	1	1	1	1		
17	93210–24M79	.O-RING .JOINT TORIQUE	1	1	1	1		
18	93210–27370	.O-RING .JOINT TORIQUE	1	1	1	1		
19	6ML–1131B–00	.GASKET, COVER .JOINT, COUVERCLE	1	1	1	1		

FIG. 47 REPAIR KIT 2 — KITS DE REPARATION 2

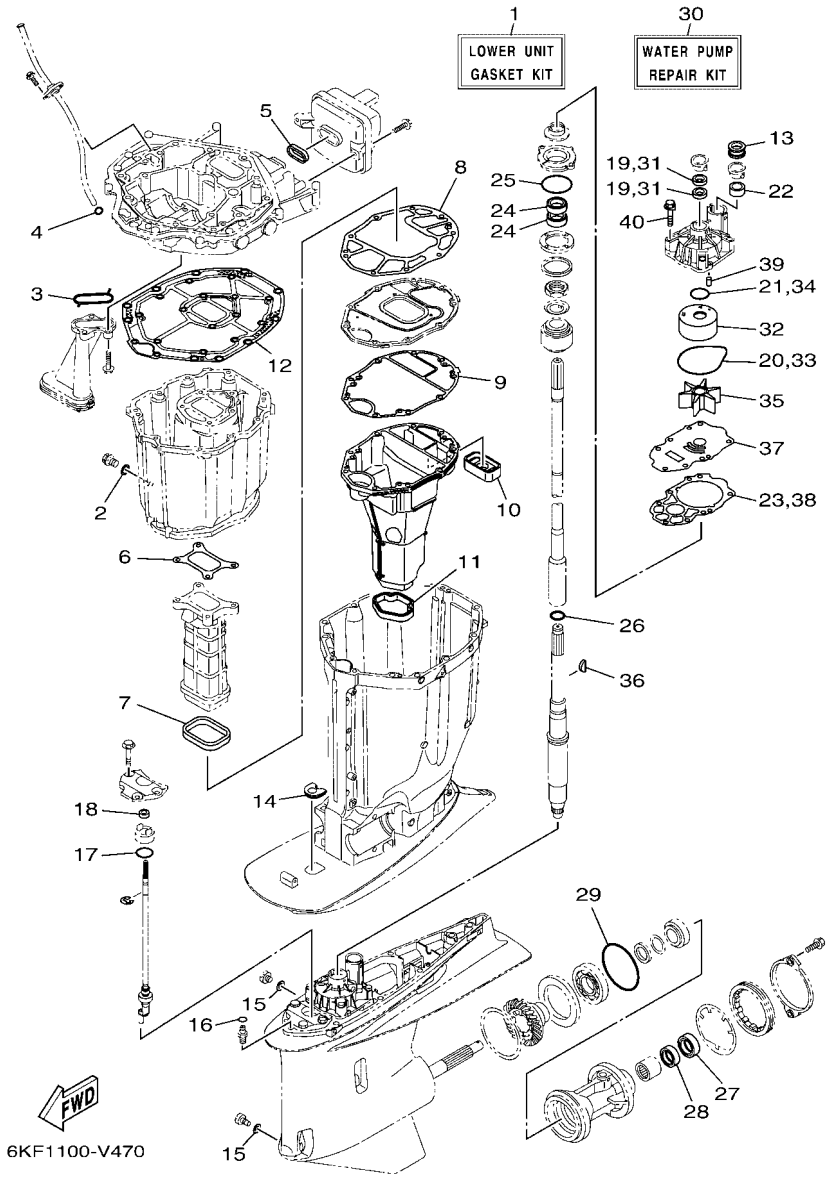

REF. NO.	PART NO. N° PIECES	DESCRIPTION DESCRIPTION	XCB	XCB2	NCB	NCB2		REMARKS REMARQUES
1	6KA–W0001–20	LOWER UNIT GASKET KIT POCHETTE DE JOINTS EMBASE	1	1	1	1		
2	90430–14M09	.GASKET .JOINT	1	1	1	1		
3	6AW–13415–00	.SEAL, OIL STRAINER .JOINT, FILTRE A HUILE	1	1	1	1		
4	93210–19MJ3	.O-RING .JOINT TORIQUE	1	1	1	1		
5	6CB–14755–01	.GASKET, SILENCER .JOINT, SILENCIEUX	1	1	1	1		
6	6CB–41134–00	.GASKET, EXHAUST MANIFOLD 2 .JOINT, PIPE D'ECHAPPEMENT 2	1	1	1	1		
7	6CB–41138–00	.SEAL, EXT. 1 .JOINT DE GROUPE 1	1	1	1	1		
8	6CB–41135–00	.GASKET, EXHAUST MANIFOLD .JOINT, PIPE D'ECHAPPEMENT	1	1	1	1		
9	6CE–41136–00	.GASKET, EXHAUST MANIFOLD 4 .JOINT, PIPE D'ECHAPPEMENT 4	1	1	1	1		
10	6CE–45127–00	.SEAL .JOINT	1	1	1	1		
11	6CE–45123–00	.GASKET, MUFFLER .JOINT, POT DE DETENTE	1	1	1	1		
12	6CB–45113–10	.GASKET, UPPER CASING .JOINT, TUBE D'ARBRE	1	1	1	1		
13	6AW–44366–01	.DAMPER, WATER SEAL 2 .JOINT, TUBE D'EAU 2	1	1	1	1		
14	6KA–44521–00	.SEAL .JOINT	1	1	1	1		
15	90430–08003	.GASKET .JOINT	2	2	2	2		
16	93210–07003	.O-RING .JOINT TORIQUE	1	1	1	1		
17	93210–33M49	.O-RING .JOINT TORIQUE	1	1	1	1		
18	93106–10001	.OIL SEAL .JOINT SPY	1	1	1	1		
19	93104–22M07	.OIL SEAL .JOINT SPY	2	2	2	2		
20	93210–94003	.O-RING .JOINT TORIQUE	1	1	1	1		
21	93210–37160	.O-RING .JOINT TORIQUE	1	1	1	1		
22	6AW–44365–01	.DAMPER, WATER SEAL 1 .JOINT, TUBE D'EAU 1	1	1	1	1		
23	6CE–44315–00	.GASKET, WATER PUMP .JOINT, POMPE A EAU	1	1	1	1		
24	93101–28019	.OIL SEAL .JOINT SPY	2	2	2	2		
25	93210–69MG6	.O-RING .JOINT TORIQUE	1	1	1	1		
26	93210–22MF1	.O-RING .JOINT TORIQUE	1	1	1	1		
27	93101–30030	.OIL SEAL .JOINT SPY	1	1	1	1		

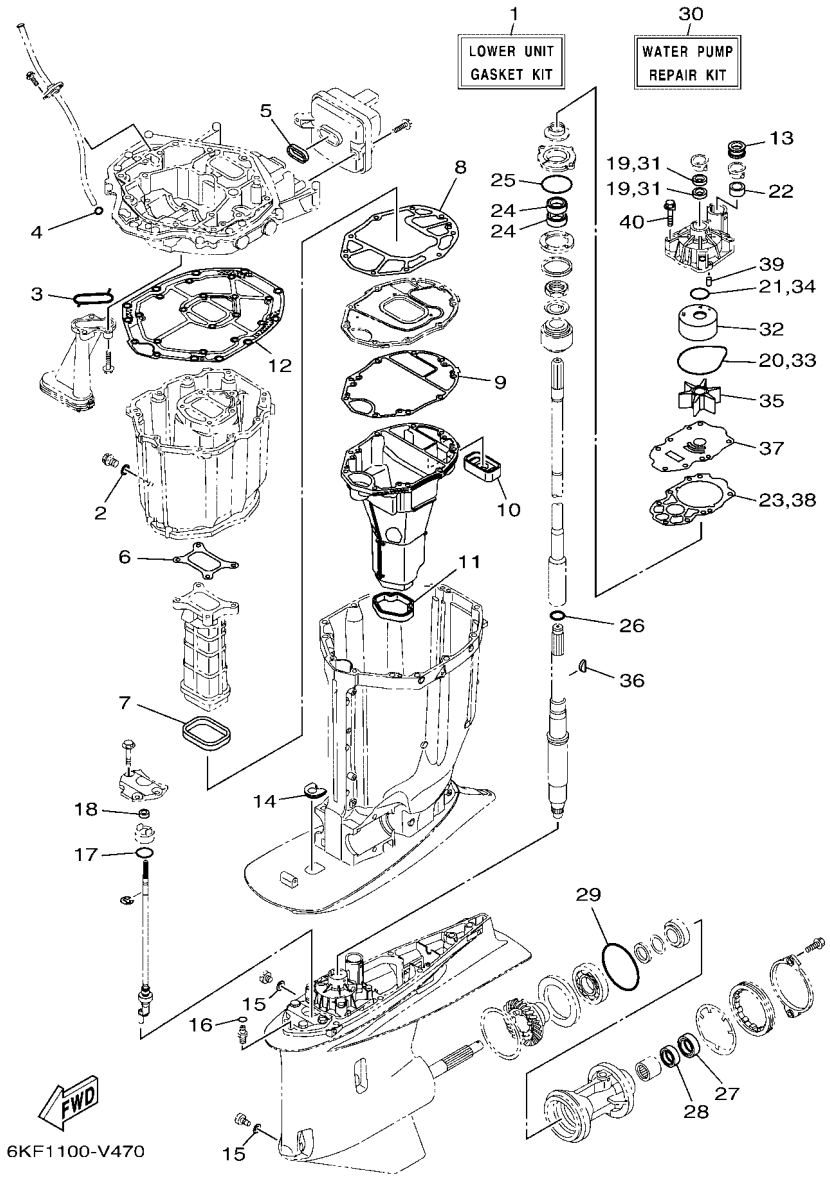

FIG. 47 REPAIR KIT 2 — KITS DE REPARATION 2

REF. NO.	PART NO. N° PIECES	DESCRIPTION DESCRIPTION	XCB	XCB2	NCB	NCB2		REMARKS REMARQUES
28	93101–30019	.OIL SEAL .JOINT SPY	1	1	1	1		
29	93211–02001	.O-RING .JOINT TORIQUE	1	1	1	1		
30	6CE–W0078–02	WATER PUMP REPAIR KIT KIT DE REPARATION DE LA POMPE	1	1	1	1		
31	93104–22M07	.OIL SEAL .JOINT SPY	2	2	2	2		
32	6AW–44322–00	.INSERT, CARTRIDGE .CUVETTE	1	1	1	1		
33	93210–94003	.O-RING .JOINT TORIQUE	1	1	1	1		
34	93210–37160	.O-RING .JOINT TORIQUE	1	1	1	1		
35	6CE–44352–00	.IMPELLER .TURBINE	1	1	1	1		
36	90280–04002	.KEY, WOODRUFF .CLAVETTE, DEMI-LUNE	1	1	1	1		
37	6CE–44323–01	.OUTER PLATE, CARTRIDGE .PLAQUE EXTERIEURE	1	1	1	1		
38	6CE–44315–00	.GASKET, WATER PUMP .JOINT, POMPE A EAU	1	1	1	1		
39	93606–12019	.PIN, DOWEL .GOUPILLE	2	2	2	2		
40	90119–08191	.BOLT, WITH WASHER .BOULON, AVEC RONDELLE	4	4	4	4		

NUMERICAL INDEX
INDEX NUMERIQUE

PART NO. N° PIECES	REF. NO.
6KA–11000–01	3 – 1
6CE–11110–12–9S	5 – 2
6CE–11120–12–9S	5 – 12
6S5–11133–10	5 – 3
	5 – 13
6CB–11181–00	5 – 25
	46 – 2
6CB–11191–02	5 – 30
6CB–11192–02	5 – 34
6CB–11193–00	5 – 31
	46 – 3
6CB–11194–00	5 – 35
	46 – 4
6ML–11301–00	5 – 19
6ML–1131B–00	3 – 12
	46 – 19
6CE–1131C–00–9S	3 – 9
68T–11325–00	1 – 4
	3 – 32
6ML–11325–00	1 – 7
	5 – 20
63P–11325–01	1 – 1
	3 – 10
	3 – 19
63P–11325–11	1 – 16
	34 – 2
67F–11328–01	5 – 21
6AW–1132N–01	1 – 5
	3 – 34
6AW–1132P–00	1 – 3
	3 – 30
6KA–11351–00	3 – 29
	46 – 9
6CB–11355–00	35 – 13
	46 – 13
6CB–1135A–00	6 – 6
6CB–11410–00	4 – 1
6CB–11416–00	4 – 5
6CB–11416–10	4 – 5
6CB–11416–20	4 – 5
6CB–11416–30	4 – 5
6CB–11416–40	4 – 5
6CB–11417–00	4 – 6
6CB–11417–10	4 – 6
6CB–11417–20	4 – 6
6CB–11417–30	4 – 6
6CB–11417–40	4 – 6
6CB–11426–03	4 – 7

PART NO. N° PIECES	REF. NO.
6CB–11427–03	4 – 8
6CB–11478–00	4 – 2
6CB–1149A–00	6 – 10
6KA–11567–00	8 – 17
6CB–11590–06	8 – 28
6CB–11603–00	4 – 12
6CE–11631–02	4 – 11
6CB–11633–00	4 – 13
63P–11654–10	4 – 10
6JD–11656–00	4 – 14
6JD–11656–10	4 – 14
6JD–11656–20	4 – 14
6KW–11998–00	5 – 42
6KW–11999–00	5 – 43
6CB–12111–00	8 – 1
6CB–12113–00	8 – 4
51Y–12119–00	8 – 7
6DA–12121–00	8 – 2
6KA–12171–01	8 – 9
6KA–12172–01	8 – 13
6KA–12181–00	8 – 11
6KA–12182–00	8 – 15
6CE–12411–00	1 – 2
	3 – 21
67F–12412–00	3 – 22
6CE–12413–A0–9S	3 – 24
6CE–12413–B0–9S	3 – 23
6CB–12422–10–9S	3 – 25
6CB–12427–11	3 – 26
	46 – 8
6CB–1242F–00	6 – 2
	46 – 5
6CB–1243E–00	7 – 15
6ML–1244G–00	7 – 12
6CE–1244H–00	7 – 14
6CE–12481–10	18 – 24
6CE–12482–10	10 – 9
6CE–12483–00	18 – 18
6KA–12483–00	10 – 27
6CB–12484–10	10 – 11
6CE–12485–00	18 – 26
6CE–1248A–00	18 – 16
6AW–12572–00	26 – 15
6KA–12576–00	7 – 3
6CB–12577–00	7 – 8
6R3–12581–10	26 – 16
6AW–12582–00	26 – 17
6R3–12583–10	26 – 18

PART NO. N° PIECES	REF. NO.
6P2–12615–00	8 – 25
6P2–12623–00	8 – 20
	8 – 23
6CB–12645–01	8 – 19
6CB–1264A–01	8 – 22
6P2–12663–00	8 – 21
	8 – 24
6CB–13016–00	1 – 10
	13 – 5
6AW–13119–00	35 – 11
6KA–13132–00	13 – 31
6CB–13161–11	12 – 1
6CB–13171–11	12 – 5
6CB–13300–00	35 – 9
6CB–13329–00	35 – 10
6CB–13411–00	35 – 6
6AW–13415–00	35 – 7
	47 – 3
6CE–13437–61	17 – 18
N26–13440–04	1 – 6
	3 – 36
6CE–13446–10–9S	3 – 38
6CB–13473–00	35 – 17
	46 – 15
6CB–13477–00	3 – 39
	46 – 16
6CB–13490–00	35 – 16
6CB–13532–10	10 – 2
6CB–13533–00	10 – 1
6CB–13545–00	10 – 19
6CB–13546–01	10 – 23
6CB–13547–00	10 – 24
6CB–13548–00	10 – 26
6CB–13556–00	11 – 3
	46 – 12
6CB–13577–00	12 – 4
	12 – 8
68V–13577–01	14 – 4
6KA–13582–00	26 – 11
6KA–13587–00	26 – 14
6CB–13593–00	13 – 21
69J–13631–00	35 – 12
6CE–13641–00	9 – 5
6CB–13645–00	9 – 6
6CB–13646–00	9 – 7
6CB–13711–00	11 – 2
63P–13716–00	13 – 20
6CB–13751–12	11 – 1

PART NO. N° PIECES	REF. NO.
6AW–13761–01	12 – 2
	12 – 6
6AW–13781–00	13 – 33
6CB–13782–00	10 – 17
6AW–13784–00	13 – 34
6KA–13898–00	11 – 7
6CB–13898–11	11 – 8
6CB–13906–01	13 – 8
6CB–13907–12	13 – 22
63P–13915–00	1 – 11
	13 – 23
6CB–13971–01	14 – 10
6CB–13972–00	14 – 12
6CB–13974–01	14 – 11
6AW–1410B–00	12 – 3
	12 – 7
6CB–14146–00	13 – 10
6P2–14149–00	14 – 2
6CB–14180–17	13 – 1
6ML–14181–00	13 – 15
6CB–14182–02	13 – 2
6P2–14191–00	13 – 16
68V–14216–00	13 – 12
6CB–14216–00	13 – 6
6P2–14386–00	13 – 36
6AW–1441J–01	9 – 11
6CE–14435–00	21 – 28
6CB–14440–01	9 – 9
6LH–1447B–00	13 – 32
6CB–14546–00	13 – 25
6CB–14564–00	13 – 9
63P–14567–00	13 – 35
6K8–14591–10	13 – 18
6KA–14711–00	34 – 20
6CB–14750–A0	34 – 10
6CB–14755–01	34 – 12
	47 – 5
6KA–1475A–00	10 – 28
6KA–1475F–00	10 – 29
6CB–1475G–10	10 – 32
6CB–1475H–00	13 – 13
6CB–1475J–00	13 – 14
6CE–14872–00	18 – 25
	18 – 28
6CB–14984–00	1 – 12
	13 – 30
6CB–14985–00	13 – 24
6EK–14989–00	10 – 31

PART NO. N° PIECES	REF. NO.
6CE–15100–10	3 – 2
6AW–15142–00	5 – 38
6CB–15142–00	6 – 8
6CB–15187–00	3 – 5
6CB–15311–01	35 – 1
6BB–15316–01	34 – 29
6CB–15319–00	3 – 43
6CB–15362–00	35 – 18
6G8–15363–00	3 – 41
6CB–15373–01	9 – 8
6CB–15377–00	35 – 19
6CE–15411–00–9S	3 – 14
6CE–15421–10–9S	3 – 15
6CB–15451–01	3 – 17
	46 – 7
6CB–15481–00	3 – 6
6CB–15512–00	8 – 29
6CB–15544–00	6 – 4
6KA–2134V–00	5 – 40
6KA–2134X–00	9 – 16
6KF–2153A–00	2 – 27
6KF–2153A–10	2 – 27
6E5–21744–00	10 – 25
6CB–2416A–00	10 – 5
69J–24170–00	9 – 14
6FP–2419E–01	9 – 15
6CB–24217–00	13 – 7
60E–24300–01	14 – 9
6CB–24313–B0	15 – 17
6KA–24314–10	15 – 2
6CB–24315–00	26 – 8
6CB–24317–00	14 – 6
6CB–24323–00	14 – 7
6CB–24324–00	14 – 5
6E5–24351–51	15 – 3
6AW–24360–02	16 – 1
6G8–24376–00	10 – 30
6CE–24376–01	18 – 27
6CE–24377–00	18 – 17
6AW–24377–01	15 – 4
688–24378–00	7 – 2
	10 – 22
	10 – 36
	18 – 30
6CE–24378–00	7 – 13
6E5–24378–00	14 – 8
68V–24379–10	13 – 11
6GR–24410–02	13 – 26

PART NO. N° PIECES	REF. NO.
6EK–24452–00	13 – 17
4SV–24453–00	13 – 37
6CB–24460–00	13 – 4
6CB–24461–00	14 – 1
6P3–24469–00	15 – 9
6CB–24482–00	13 – 19
6CB–24491–00	13 – 29
6CB–24492–00	13 – 27
6CB–24501–01	1 – 9
	13 – 3
6P3–24519–00	15 – 8
6P3–24560–23	15 – 6
6P3–24563–02	1 – 14
	15 – 11
6P3–24564–00	1 – 13
	15 – 10
6CB–24566–00	15 – 12
6CB–24592–00	13 – 28
6CB–24596–01	15 – 19
69J–28100–03	15 – 21
67F–2812A–00	20 – 31
6KF–28199–75–D0	15 – 22
6KF–28199–75–E0	15 – 22
6KF–28199–75–F0	15 – 22
6KF–28199–75–G0	15 – 22
6KF–28199–75–H0	15 – 22
6KF–28199–75–S0	15 – 22
6KF–28199–85–K0	15 – 23
6KF–28199–85–L0	15 – 23
6KF–28199–85–M0	15 – 23
6KF–28199–85–N0	15 – 23
6KF–28199–85–P0	15 – 23
6KF–28199–85–R0	15 – 23
6CB–41132–01	34 – 13
6CB–41134–00	34 – 14
	47 – 6
6CB–41135–00	34 – 17
	47 – 8
6CE–41136–00	34 – 19
	47 – 9
6CE–41137–01	34 – 1
6CB–41138–00	34 – 16
	47 – 7
6CB–42134–01	2 – 23
6AW–42169–00	26 – 10
6CE–42195–10	28 – 8
6BG–42384–00	26 – 2
6DA–42384–00	25 – 26

PART NO. N° PIECES	REF. NO.
6CE–42510–00–8D	31 – 1
6CE–42510–00–CE	31 – 1
6KA–42541–00	26 – 20
6CB–42545–00	2 – 5
6KF–42610–01–8D	2 – 1
6KF–42610–11–CE	2 – 1
6KA–42613–00–8D	2 – 3
6KA–42613–00–CE	2 – 3
6KA–42615–20	25 – 7
6BG–42617–00	21 – 9
6CB–42617–00	21 – 10
6KA–4261A–01–8D	2 – 2
6KA–4261A–01–CE	2 – 2
6KA–42625–00–8D	2 – 6
6KA–42625–00–CE	2 – 6
6CB–42629–00	21 – 11
6CB–42643–00	26 – 25
6CB–42644–00	26 – 26
6CB–42647–B0	2 – 12
6KW–42662–00	5 – 44
6AW–42663–01	2 – 18
6KF–42678–00	2 – 24
6KF–4267A–00	2 – 25
6KF–42682–00	2 – 26
6KN–42697–00	2 – 21
6LB–42697–00	2 – 22
6KA–42710–00–8D	25 – 1
6KA–42710–00–CE	25 – 1
6CB–42716–01	25 – 8
61A–42717–00	34 – 9
6DA–42717–01	25 – 25
6KA–42723–00–8D	27 – 10
6KA–42723–00–CE	27 – 10
6KA–42723–10–8D	40 – 1
6KA–42723–10–CE	40 – 1
6BG–42724–01	26 – 1
6E5–42724–01	34 – 8
6KA–42725–01	25 – 2
676–42726–00	27 – 16
6KA–42727–00	26 – 4
6KF–42740–00–8D	27 – 1
6KF–42740–00–CE	27 – 1
6CB–42744–00	26 – 31
6H4–42748–01	25 – 27
68F–42753–00	25 – 3
6CB–42756–00	25 – 31
69M–42758–01	18 – 5
	20 – 10

PART NO. N° PIECES	REF. NO.
6CB–42761–00	25 – 5
6ML–42766–00	25 – 29
6KA–42769–00	27 – 15
6KF–42770–00–8D	27 – 2
6KF–42770–00–CE	27 – 2
6CE–42774–B0	27 – 9
6EE–42794–41	25 – 33
6EE–42794–51	25 – 34
6KA–42815–00–8D	25 – 9
6KA–42815–00–CE	25 – 9
6KA–42816–00–8D	25 – 10
6KA–42816–00–CE	25 – 10
6KA–42817–00–8D	25 – 11
6KA–42817–00–CE	25 – 11
6CB–42818–00	25 – 15
6CB–42819–00	25 – 16
6KF–42828–00	30 – 22
6KF–42829–00	30 – 20
69J–43111–03–8D	29 – 1
69J–43111–03–CE	29 – 1
69J–43112–03–8D	29 – 9
69J–43112–03–CE	29 – 9
6KA–43126–00	30 – 14
6R3–43131–00	29 – 12
61A–43132–01	29 – 7
61A–43133–01	29 – 10
66T–43144–00	25 – 20
6G5–43144–00	29 – 19
6E5–43145–01	38 – 8
6G5–43148–00	29 – 24
61A–43181–01	29 – 21
6G5–43185–02	29 – 22
6KF–43311–00–8D	29 – 16
6KF–43311–00–CE	29 – 16
6AW–43376–00	30 – 18
6KA–43800–02–8D	32 – 1
6KA–43800–02–CE	32 – 1
6KA–43801–00	32 – 4
6ML–43805–00	33 – 2
6KA–43806–00	33 – 4
6CE–4380P–00	32 – 12
6KA–43810–00	32 – 3
61A–43811–00	32 – 9
63P–43812–20	32 – 76
61A–43813–02	32 – 18
6H1–43814–11	32 – 17
69J–43816–00	32 – 62
69J–43817–00	32 – 67

PART NO. N° PIECES	REF. NO.
61A–43818–00	32 – 25
69J–4381C–00	32 – 30
	32 – 35
69J–4381J–00	32 – 63
69J–43820–01	32 – 78
61A–43821–02	32 – 77
6KA–43828–00	32 – 70
6H1–43829–00	32 – 73
6KA–4382A–00	30 – 8
69J–4382E–00	32 – 11
69J–43830–01	32 – 33
69J–43831–00	32 – 65
69J–43833–02	32 – 21
69J–43835–10	32 – 19
6KA–43840–00	32 – 2
6CJ–43841–00	32 – 42
6CJ–43843–00	32 – 53
6H1–43844–10	32 – 55
63P–43844–20	32 – 50
69J–43845–00	32 – 28
69A–4384F–00	32 – 39
69J–4384G–00	32 – 58
6H1–4384G–11	32 – 54
69J–4384H–00	32 – 10
61A–4384H–10	32 – 81
6CJ–4384M–00	32 – 38
69J–43851–00	32 – 49
69J–43853–00	32 – 45
69J–43854–00	32 – 57
69J–43855–00	32 – 52
6H1–43856–10	32 – 56
61A–43861–00	32 – 14
	32 – 16
	32 – 74
63P–43861–20	32 – 6
6KA–43862–00	33 – 12
6D8–43863–00	32 – 27
	32 – 75
61A–43864–00	32 – 80
60V–4386A–00	32 – 44
6KA–4386K–00	33 – 5
61A–43871–00	32 – 15
69J–43871–00	32 – 61
6H1–43872–00	32 – 7
61A–43874–00	32 – 79
6H1–43875–00	32 – 29
61A–43875–10	32 – 82
61A–43876–01	32 – 26

PART NO. N° PIECES	REF. NO.
6KA–43879–00	33 – 7
6KA–4387G–00	33 – 8
6KA–43880–08–8D	33 – 1
6KA–43880–08–CE	33 – 1
6KA–43882–00	33 – 11
6H1–43883–00	32 – 43
6KF–43885–00	26 – 6
69J–43888–00	32 – 71
69J–4388E–01	32 – 23
69J–4388F–00	32 – 68
6KA–4388F–00	33 – 10
69J–4388H–00	32 – 66
69J–4388J–00	32 – 20
6KA–43892–00	33 – 3
6CJ–43893–00	32 – 46
69J–43894–00	32 – 41
69J–43899–01	32 – 31
61A–4389H–01	32 – 8
69J–4389J–00	32 – 32
	32 – 36
6CE–44117–10	28 – 14
6CE–44118–A0	28 – 18
6JD–44120–01	28 – 20
6CE–44121–10	28 – 16
6CE–44122–20	28 – 9
6CE–44142–20	28 – 7
6KA–44150–00	36 – 14
	41 – 14
6KB–44150–00	42 – 14
6KA–44190–00	44 – 6
6KA–44190–10	44 – 6
6CE–44194–01	31 – 28
6CE–44311–01	36 – 16
	41 – 16
	42 – 16
6AW–44312–00	36 – 22
	41 – 22
	42 – 22
	44 – 15
6CB–44312–00	36 – 29
	41 – 29
	42 – 29
6CE–44315–00	36 – 26
	41 – 26
	42 – 26
	47 – 23
	47 – 38
6AW–44322–00	36 – 18

PART NO. N° PIECES	REF. NO.
6AW–44322–00	41 – 18
	42 – 18
	47 – 32
6CE–44323–01	36 – 25
	41 – 25
	42 – 25
	47 – 37
6CE–44352–00	36 – 23
	41 – 23
	42 – 23
	47 – 35
6CE–44361–00	37 – 3
6CE–44362–00	44 – 13
6AW–44363–00	44 – 16
6CE–44363–00	44 – 16
6AW–44365–01	36 – 21
	37 – 1
	41 – 21
	42 – 21
	44 – 14
	47 – 22
6AW–44366–01	37 – 2
	44 – 11
	44 – 11
	47 – 13
6KA–44385–00	39 – 1
6P2–44391–00	25 – 28
6CE–44511–00	31 – 30
6CE–44514–00	31 – 20
6KA–44521–00	34 – 44
	47 – 14
6CE–44526–00	31 – 21
6G5–44526–00	29 – 3
6CE–44532–01	31 – 23
6CE–44533–00	31 – 29
6CE–44536–00	31 – 22
6CE–44551–00–CA	31 – 6
6AW–44552–00–CA	31 – 18
6KA–44555–00	31 – 9
6CE–44574–00	31 – 8
6KA–45111–01–8D	34 – 25
6KA–45111–01–CE	34 – 25
6CB–45113–10	34 – 26
	47 – 12
6CE–45123–00	34 – 24
	47 – 11
6CE–45127–00	34 – 23
	47 – 10

PART NO. N° PIECES	REF. NO.
6BB–45152–01	34 – 30
61A–45155–01	34 – 35
6KA–45181–00	34 – 18
6CE–45211–10–8D	44 – 8
	44 – 8
6CE–45211–10–CE	44 – 8
	44 – 8
6KA–45214–00	37 – 7
	43 – 2
6KA–45215–00	37 – 8
	43 – 3
6CE–45224–00	37 – 10
	43 – 5
6CE–45225–00	37 – 11
	43 – 6
6AW–45244–00	36 – 42
	41 – 42
	42 – 42
6G5–45251–02	1 – 15
	29 – 2
6KA–45254–00	37 – 14
	43 – 9
6KA–45255–00	37 – 15
	43 – 10
6ML–45300–00–8D	36 – 1
	41 – 1
6MM–45300–00–8D	42 – 1
6ML–45300–00–CE	36 – 1
	41 – 1
6MM–45300–00–CE	42 – 1
6KA–45301–00–8D	36 – 2
	41 – 2
	42 – 2
6KA–45301–00–CE	36 – 2
	41 – 2
	42 – 2
69J–45318–01	34 – 32
6CE–45321–20	36 – 11
	41 – 11
	42 – 11
6CE–45332–00–CA	36 – 69
	41 – 69
6CF–45332–01–CA	42 – 67
6AW–45335–00–CA	36 – 31
	41 – 31
	42 – 31
688–45341–10	36 – 4
	41 – 4

PART NO. N° PIECES	REF. NO.
688–45341–10	42 – 4
6KA–45344–00	36 – 37
	41 – 37
	42 – 37
6CE–45361–10	36 – 84
	41 – 84
	42 – 80
6CE–45373–00	1 – 19
	37 – 18
	43 – 13
6CE–45375–00	36 – 8
	41 – 8
	42 – 8
663–45376–00	36 – 7
	41 – 7
	42 – 7
63P–45378–00	36 – 9
	41 – 9
	42 – 9
	44 – 9
	44 – 9
63P–45379–00	34 – 42
6CB–45383–00	36 – 82
	41 – 82
	42 – 78
6CB–45384–00	36 – 83
	41 – 83
	42 – 79
6KA–45501–00	36 – 44
	41 – 44
	42 – 44
6T5–45539–00	36 – 43
	41 – 43
	42 – 43
6KA–45550–00	36 – 48
	41 – 48
6KB–45550–00	42 – 48
6KB–45560–00	42 – 50
676–45567–00	36 – 80
	41 – 80
6CB–45567–00	36 – 57
	41 – 57
	42 – 55
676–45567–10	36 – 80
	41 – 80
6CB–45567–10	36 – 57
	41 – 57
	42 – 55

PART NO. N° PIECES	REF. NO.
676–45567–20	36 – 80
	41 – 80
6CB–45567–20	36 – 57
	41 – 57
	42 – 55
676–45567–30	36 – 80
	41 – 80
6CB–45567–30	36 – 57
	41 – 57
	42 – 55
676–45567–40	36 – 80
	41 – 80
6CB–45567–40	36 – 57
	41 – 57
	42 – 55
676–45567–50	36 – 80
	41 – 80
6CB–45567–50	36 – 57
	41 – 57
	42 – 55
6KA–45571–00	36 – 71
	41 – 71
6CB–45576–00	36 – 72
	41 – 72
6CF–45576–00	42 – 69
6CB–45577–00	36 – 77
	41 – 77
	42 – 74
6CB–45577–10	36 – 77
	41 – 77
	42 – 74
6CB–45577–20	36 – 77
	41 – 77
	42 – 74
6CB–45577–30	36 – 77
	41 – 77
	42 – 74
6CB–45577–40	36 – 77
	41 – 77
	42 – 74
6CB–45577–50	36 – 77
	41 – 77
	42 – 74
6CB–45577–60	36 – 77
	41 – 77
	42 – 74
6K1–45578–01	42 – 76
6K1–45578–10	42 – 76

PART NO. N° PIECES	REF. NO.
6K1–45578–20	42 – 76
6K1–45578–30	42 – 76
6K1–45578–40	42 – 76
6K1–45578–50	42 – 76
6K1–45578–60	42 – 76
6AW–45587–00	36 – 35
	41 – 35
	42 – 35
6AW–45587–10	36 – 35
	41 – 35
	42 – 35
6AW–45587–20	36 – 35
	41 – 35
	42 – 35
6AW–45587–30	36 – 35
	41 – 35
	42 – 35
6AW–45587–40	36 – 35
	41 – 35
	42 – 35
6AW–45587–50	36 – 35
	41 – 35
	42 – 35
6AW–45587–60	36 – 35
	41 – 35
	42 – 35
6CB–45611–00	36 – 58
	41 – 58
6KB–45611–00	42 – 56
6ML–45631–00	36 – 67
	41 – 67
	42 – 65
6E5–45633–01	36 – 68
	41 – 68
	42 – 66
6CB–45634–00	36 – 59
	41 – 59
	42 – 57
61A–45635–00	36 – 63
	41 – 63
	42 – 61
6H1–45668–00	36 – 62
	41 – 62
	42 – 60
6KF–45802–00	36 – 45
	41 – 45
	42 – 45
6KF–45802–10	41 – 45

PART NO. N° PIECES	REF. NO.
6KF–45802–10	42 – 45
6KF–45802–20	41 – 45
	42 – 45
6CB–45824–00	36 – 51
	41 – 51
	42 – 52
68F–45930–20	37 – 25
	43 – 20
68G–45930–20	43 – 24
6CE–45930–20	37 – 25
	43 – 20
6CF–45930–20	43 – 24
68F–45932–20	37 – 25
	43 – 20
6CE–45932–20	37 – 25
	43 – 20
6CF–45932–20	43 – 24
6CE–45934–20	37 – 25
	43 – 20
6CF–45934–20	43 – 24
6CE–45936–20	37 – 25
	43 – 20
6CF–45936–20	43 – 24
6CE–45938–20	37 – 25
	43 – 20
6CF–45938–20	43 – 24
60H–45970–00	37 – 25
	43 – 20
60J–45970–00	43 – 24
6KA–45970–00	37 – 25
	43 – 20
6KB–45970–00	43 – 24
68F–45970–20	37 – 25
	43 – 20
68G–45970–20	43 – 24
6CE–45970–20	37 – 25
	43 – 20
6CF–45970–20	43 – 24
60H–45972–00	37 – 25
	43 – 20
60J–45972–00	43 – 24
6KA–45972–00	37 – 25
	43 – 20
6KB–45972–00	43 – 24
68F–45972–20	37 – 25
	43 – 20
68G–45972–20	43 – 24
6CE–45972–20	37 – 25

PART NO. N° PIECES	REF. NO.
6CE–45972–20	43 – 20
6CF–45972–20	43 – 24
60H–45974–00	37 – 25
	43 – 20
60J–45974–00	43 – 24
6KA–45974–00	37 – 25
	43 – 20
6KB–45974–00	43 – 24
68F–45974–20	37 – 25
	43 – 20
68G–45974–20	43 – 24
6CE–45974–20	37 – 25
	43 – 20
6CF–45974–20	43 – 24
60H–45976–00	37 – 25
	43 – 20
60J–45976–00	43 – 24
6KA–45976–00	37 – 25
	43 – 20
6KB–45976–00	43 – 24
68F–45976–20	37 – 25
	43 – 20
68G–45976–20	43 – 24
6CE–45976–20	37 – 25
	43 – 20
6CF–45976–20	43 – 24
60H–45978–00	37 – 25
	43 – 20
60J–45978–00	43 – 24
68F–45978–20	37 – 25
	43 – 20
68G–45978–20	43 – 24
6CE–45978–20	37 – 25
	43 – 20
6CF–45978–20	43 – 24
69J–45987–00	37 – 20
	43 – 15
688–45997–01	37 – 21
	43 – 16
6ML–45B70–00	37 – 27
	43 – 22
6MM–45B70–00	43 – 26
6CE–45B70–20	37 – 27
	43 – 22
6CF–45B70–20	43 – 26
6ML–45B72–00	37 – 27
	43 – 22
6MM–45B72–00	43 – 26

PART NO. N° PIECES	REF. NO.
6CE–45B72–20	37 – 27
	43 – 22
6CF–45B72–20	43 – 26
6ML–45B74–00	37 – 27
	43 – 22
6MM–45B74–00	43 – 26
6CE–45B74–20	37 – 27
	43 – 22
6CF–45B74–20	43 – 26
6ML–45B76–00	37 – 27
	43 – 22
6MM–45B76–00	43 – 26
6ML–45B78–00	37 – 27
	43 – 22
6MM–45B78–00	43 – 26
6ML–45B80–00	37 – 27
	43 – 22
6MM–45B80–00	43 – 26
6ML–45B82–00	37 – 27
	43 – 22
6MM–45B82–00	43 – 26
6ML–45B84–00	37 – 27
	43 – 22
6MM–45B84–00	43 – 26
6ML–45B86–00	37 – 27
	43 – 22
6MM–45B86–00	43 – 26
6CE–45C81–10	37 – 26
	37 – 28
	43 – 21
	43 – 23
	43 – 25
	43 – 27
6CE–45D70–20	37 – 25
	43 – 20
6CF–45D70–20	43 – 24
6CE–45D72–20	37 – 25
	43 – 20
6CE–45D74–20	37 – 25
	43 – 20
6KA–46153–00	34 – 33
6KF–46894–00	34 – 39
6ML–4820A–00	28 – 1
6E5–61350–02	38 – 1
6E5–61351–01	38 – 2
6E5–61355–00	38 – 5
6CE–68303–00	28 – 27
6P2–81336–01	20 – 33

NUMERICAL INDEX
INDEX NUMERIQUE

PART NO. N° PIECES	REF. NO.
6CE–81337–01	17 – 12
6CE–81410–00	17 – 3
6CB–81443–00	22 – 6
6CB–81639–10	20 – 27
6CE–81800–02	24 – 1
6CE–81801–01	24 – 5
6CE–81807–00	24 – 8
6CB–81809–00	24 – 14
6CE–81810–00	24 – 3
67F–81813–00	24 – 6
6CE–81820–00	24 – 7
6CE–81821–00	24 – 11
6CB–81822–02	22 – 4
6CB–81823–B0	22 – 8
6CB–81826–00	24 – 22
69J–81828–00	24 – 23
6CE–81830–00	24 – 16
6CB–81832–00	24 – 9
6CB–81836–00	24 – 10
6CE–81839–00	24 – 19
67F–8183R–00	24 – 13
60V–8183T–00	24 – 17
6P2–8183X–00	20 – 18
6CE–81840–01	24 – 4
67F–81841–00	24 – 12
6CE–81842–00	24 – 18
6BR–81845–00	18 – 7
67F–81846–00	24 – 24
6CE–81850–00	24 – 2
6CE–81869–00	24 – 21
67F–81891–00	24 – 15
6CE–81919–21	20 – 35
6KF–81925–00	20 – 1
6KA–81929–00	20 – 4
6C5–81941–01	24 – 20
6CB–81948–02	20 – 8
6KW–81949–00	22 – 13
6CB–81952–00	21 – 30
6AW–8195A–00	20 – 22
6CE–81960–10	18 – 11
6CE–81972–00–9S	18 – 12
6CE–81975–00	18 – 13
6CE–81980–01	21 – 2
6EE–81994–41	17 – 19
6EE–81994–51	17 – 20
6AH–81996–01	25 – 35
6KA–82105–00	20 – 38
6P2–82113–00	20 – 30

PART NO. N° PIECES	REF. NO.
6KA–82147–00	29 – 18
6E5–82148–00	29 – 5
6AW–82149–00	31 – 14
67F–82151–00	20 – 25
6CE–82151–00	20 – 21
67F–82151–10	20 – 26
67F–82151–40	20 – 23
67F–82151–50	20 – 24
6CE–82170–11	20 – 20
6CB–82310–02	19 – 1
6CB–82314–00	19 – 3
6CB–82316–01	18 – 3
6P2–82380–00	11 – 5
6CB–82388–00	21 – 18
6KF–82553–00	30 – 13
6P2–82560–01	21 – 21
6GR–82563–00	21 – 26
68V–82582–10	21 – 3
6E9–82588–00	21 – 22
6KA–82588–00	20 – 6
6CB–82589–01	21 – 8
6KF–82590–02	21 – 1
6KA–82594–00	21 – 5
6CE–8259M–01	22 – 12
68F–82846–00	20 – 29
6KA–83383–01	9 – 22
6E5–83558–00	34 – 37
6AW–83651–01	21 – 24
6AW–8366B–10	23 – 1
	45 – 1
60V–8366D–00	23 – 2
	45 – 2
6P2–85075–00	19 – 6
64J–85516–01	18 – 4
	20 – 9
6CB–85516–01	17 – 17
6CB–85544–00	20 – 28
6CB–85547–00	9 – 10
689–85547–01	15 – 1
6CB–85561–00	17 – 5
6CE–85564–00	28 – 6
6CB–85580–01	17 – 4
6ML–85592–00	17 – 8
6P2–85780–01	6 – 11
6CB–85790–00	21 – 20
63P–85886–00	21 – 27
6GR–85887–00	30 – 10
6P2–85896–00	19 – 5

PART NO. N° PIECES	REF. NO.
6KA–8591A–02	18 – 1
6C5–86120–00	10 – 3
6CB–86120–00	6 – 1
K0F–A3233–00	4 – 15
K0F–A3741–00	8 – 5
K0F–A3742–00	8 – 6
K0F–A3743–00	8 – 3
K0F–A3751–00	8 – 8
K0F–A3751–10	8 – 8
K0F–A3751–20	8 – 8
K0F–A3751–30	8 – 8
K0F–A3751–40	8 – 8
K0F–A3751–50	8 – 8
K0F–A3751–60	8 – 8
K0F–A3751–70	8 – 8
K0F–A3751–80	8 – 8
K0F–A3751–90	8 – 8
K0F–A3751–A0	8 – 8
K0F–A3751–B0	8 – 8
K0F–A3751–C0	8 – 8
K0F–A3751–D0	8 – 8
K0F–A3751–E0	8 – 8
K0F–A3751–F0	8 – 8
K0F–A3751–G0	8 – 8
K0F–A3751–H0	8 – 8
K0F–A3751–J0	8 – 8
K0F–A3751–K0	8 – 8
K0F–A3751–L0	8 – 8
K0F–A3751–M0	8 – 8
K0F–A3751–N0	8 – 8
K0F–A3751–P0	8 – 8
K0F–A3751–R0	8 – 8
K0F–A3751–S0	8 – 8
K0F–A3751–T0	8 – 8
K0F–A3753–00	8 – 8
K0F–A3753–10	8 – 8
K0F–A3753–20	8 – 8
K0F–A3753–30	8 – 8
K0F–A3753–40	8 – 8
K0F–A3753–50	8 – 8
K0F–A3753–60	8 – 8
K0F–A3753–70	8 – 8
6CB–W0001–05	46 – 1
6KA–W0001–20	47 – 1
6CE–W0078–02	1 – 20
	47 – 30
6KA–W009A–02–9S	5 – 1
6KA–W009C–02–9S	5 – 11

PART NO. N° PIECES	REF. NO.
6CB–W1165–10	4 – 9
6CB–W4624–00	8 – 27
6CE–W8145–01	17 – 1
6AW–W8195–10	20 – 15
6EK–W9010–00	17 – 2
6P3–WS24B–21	15 – 7
90101–12065	29 – 29
90101–12066	29 – 33
90101–14004	31 – 15
90105–06035	6 – 3
	9 – 4
90105–06037	3 – 28
	3 – 45
	6 – 7
90105–06039	26 – 30
90105–06151	3 – 18
	3 – 40
	22 – 9
90105–06M07	3 – 13
	5 – 22
90105–08175	3 – 7
	5 – 28
90105–08178	6 – 5
90105–08220	5 – 29
90105–08M61	36 – 85
	41 – 85
	42 – 81
90105–08M87	22 – 5
90105–10M00	37 – 19
	43 – 14
90105–14005	31 – 25
90109–06277	5 – 33
	5 – 37
90109–06M80	27 – 8
90110–05039	37 – 9
	37 – 13
	43 – 4
	43 – 8
90111–06144	27 – 3
90111–08078	2 – 13
90116–10066	44 – 1
90116–10067	44 – 1
90119–05M04	9 – 23
90119–06047	12 – 9
90119–06287	34 – 43
90119–06291	26 – 29
90119–06293	18 – 6
	20 – 11

PART NO. N° PIECES	REF. NO.
90119–06299	9 – 2
90119–06309	9 – 19
	15 – 13
90119–06MA3	18 – 14
90119–07001	5 – 5
	5 – 15
90119–07234	5 – 6
	5 – 16
90119–08020	9 – 3
90119–08168	28 – 3
90119–08180	36 – 30
	41 – 30
	42 – 30
90119–08182	34 – 4
90119–08187	25 – 24
90119–08191	36 – 28
	41 – 28
	42 – 28
	47 – 40
90119–10007	34 – 27
90119–10008	44 – 5
90119–10009	44 – 4
90119–10024	30 – 7
	31 – 19
	31 – 31
	37 – 5
	44 – 1
90119–10050	8 – 18
90119–10060	44 – 5
90119–10061	44 – 4
90119–10M07	8 – 31
90149–05048	36 – 47
	41 – 47
	42 – 47
90149–11001	5 – 27
90151–05M05	3 – 33
90151–06M02	3 – 11
	3 – 20
	34 – 3
90159–06053	27 – 5
	27 – 14
90170–30M18	36 – 41
	41 – 41
	42 – 41
90171–18M04	37 – 23
	43 – 18
90179–06M28	2 – 4
	5 – 41

PART NO. N° PIECES	REF. NO.
90179–08003	22 – 2
90179–16017	36 – 49
	41 – 49
	42 – 49
90183–02M03	36 – 65
	41 – 65
	42 – 63
90183–061A8	27 – 4
	27 – 13
90185–05002	37 – 12
	37 – 16
	43 – 7
	43 – 11
90185–06M07	5 – 45
	28 – 12
90185–09M01	38 – 6
90185–14M00	31 – 16
	31 – 26
90185–22M11	29 – 15
90201–02M00	36 – 64
	41 – 64
	42 – 62
90201–053R1	2 – 10
90201–06068	28 – 11
90201–06M02	34 – 41
90201–10M01	8 – 32
90201–10M20	38 – 7
90201–11008	28 – 24
90201–12064	28 – 4
90201–12426	29 – 31
90201–13M01	29 – 30
90201–156J2	25 – 13
90201–15M58	31 – 13
90201–16032	31 – 10
90201–186F1	5 – 8
	5 – 18
90201–26M59	29 – 14
90201–301U7	36 – 39
	41 – 39
	42 – 39
90201–32008	36 – 79
	41 – 79
90201–35008	31 – 12
90201–40M00	31 – 2
90201–41008	36 – 54
	41 – 54
90201–68008	36 – 34
	41 – 34

PART NO. N° PIECES	REF. NO.
90201–68008	42 – 34
90202–08M41	28 – 10
90202–32M19	31 – 11
90202–40M47	31 – 5
90206–15M18	25 – 14
90214–30003	36 – 40
	41 – 40
	42 – 40
90249–06M19	29 – 25
90250–08M07	36 – 66
	41 – 66
	42 – 64
90280–04002	36 – 24
	41 – 24
	42 – 24
	47 – 36
90282–05008	36 – 81
	41 – 81
	42 – 77
90340–08002	36 – 6
	41 – 6
	42 – 6
90340–14M06	5 – 9
	35 – 4
90340–18M09	5 – 7
	5 – 17
90386–08008	28 – 2
90386–10001	28 – 25
90386–10M16	29 – 23
90386–11001	28 – 22
90386–15M73	25 – 12
90386–18M14	30 – 17
	32 – 24
90386–25M31	29 – 13
90386–39M89	31 – 3
90387–06285	17 – 14
90387–06289	9 – 18
	15 – 15
90387–06M03	26 – 28
90387–06M43	27 – 7
	27 – 12
90387–07054	2 – 8
90387–08104	28 – 5
90387–08M37	25 – 23
90387–08M45	2 – 16
90387–10094	2 – 14
90387–10M05	29 – 26
90387–10M61	38 – 3

PART NO. N° PIECES	REF. NO.
90387–11005	5 – 26
90387–28013	31 – 24
90401–19001	3 – 37
90413–10001	26 – 13
90430–06M03	5 – 23
90430–08003	1 – 18
	36 – 5
	41 – 5
	42 – 5
	47 – 15
90430–14115	5 – 10
90430–14M09	1 – 17
	35 – 5
	47 – 2
90445–09068	18 – 29
90445–09120	10 – 10
90445–09220	7 – 1
90445–096H2	7 – 10
90445–107A5	18 – 19
90445–14021	26 – 9
90445–15M03	25 – 19
90446–15006	20 – 19
90462–06013	18 – 21
90462–08104	30 – 23
90464–07209	10 – 21
90464–08004	11 – 9
	21 – 7
90464–09013	7 – 5
	10 – 16
90464–09129	21 – 29
90464–10011	10 – 35
90464–10M59	7 – 4
90464–11012	10 – 33
90464–11121	21 – 13
90464–12009	14 – 15
90464–12010	7 – 6
	10 – 14
	10 – 34
90464–12012	14 – 16
	14 – 17
90464–12183	20 – 13
	21 – 15
90464–13227	22 – 10
90464–13249	9 – 20
	9 – 24
	18 – 9
	20 – 12
90464–16001	21 – 25

PART NO. N° PIECES	REF. NO.
90464–16017	26 – 12
90464–18004	22 – 11
90464–18246	21 – 14
90464–20181	9 – 21
	10 – 20
	18 – 10
	20 – 14
	21 – 4
	21 – 16
	21 – 17
90464–20258	25 – 4
90464–23001	10 – 6
90464–26002	7 – 9
	10 – 15
	18 – 23
90464–99004	9 – 12
90465–08M83	30 – 2
	30 – 5
90465–11M10	7 – 7
	7 – 11
	10 – 7
	10 – 13
	15 – 5
	15 – 18
	17 – 9
	18 – 31
	18 – 32
	18 – 33
	23 – 4
	26 – 3
	26 – 21
	30 – 4
	34 – 38
	34 – 38
	45 – 3
	45 – 3
	45 – 3
90465–11M59	7 – 16
90465–14M66	7 – 17
	14 – 14
90467–08M18	18 – 34
90467–090A0	10 – 12
90467–09M09	10 – 8
	18 – 20
90467–130A5	26 – 22
90467–140A8	26 – 23
90467–140A9	14 – 13
	26 – 24

PART NO. N° PIECES	REF. NO.
90467–141A2	14 – 3
90468–18008	28 – 13
	28 – 17
90480–10M23	9 – 17
	15 – 14
90480–12314	17 – 16
	19 – 4
90480–13004	2 – 7
90480–13163	26 – 7
90480–13M24	27 – 6
	27 – 11
90480–14029	26 – 27
90480–15M31	17 – 15
90480–16009	2 – 11
90480–19031	26 – 5
90480–22M81	25 – 22
90501–10M77	36 – 60
	41 – 60
	42 – 58
90506–16003	29 – 28
90506–22001	25 – 18
90560–12M01	38 – 4
91318–05025	32 – 59
91318–05040	32 – 64
91380–05020	37 – 17
	43 – 12
91490–40030	37 – 24
	43 – 19
91690–30020	29 – 27
91690–40010	3 – 16
91690–60022	30 – 15
91809–08006	5 – 4
	5 – 14
92990–06100	2 – 19
92990–08600	2 – 15
92990–18200	37 – 22
	43 – 17
92995–10600	44 – 2
92995–14600	31 – 17
	31 – 27
93101–28019	36 – 32
	41 – 32
	42 – 32
	47 – 24
93101–30019	36 – 75
	41 – 75
	42 – 72
	47 – 28

PART NO. N° PIECES	REF. NO.
93101–30030	36 – 74
	41 – 74
	42 – 71
	47 – 27
93102–38008	8 – 26
	46 – 11
93102–85008	4 – 4
	46 – 10
93104–22M07	36 – 17
	41 – 17
	42 – 17
	47 – 19
	47 – 31
93106–10001	36 – 13
	41 – 13
	42 – 13
	47 – 18
93106–19001	32 – 5
93210–064A5	32 – 51
93210–06ME6	30 – 16
93210–07003	36 – 10
	41 – 10
	42 – 10
	44 – 10
	44 – 10
	47 – 16
93210–08391	32 – 48
93210–09165	28 – 21
	32 – 72
	44 – 7
93210–11001	19 – 7
93210–16275	38 – 9
93210–17239	32 – 22
93210–17MF9	30 – 11
93210–19MJ3	35 – 20
	47 – 4
93210–22MF1	36 – 46
	41 – 46
	42 – 46
	47 – 26
93210–24M79	3 – 42
	46 – 17
93210–26658	3 – 8
	35 – 15
	46 – 6
	46 – 14
93210–27370	3 – 44
	46 – 18

PART NO. N° PIECES	REF. NO.
93210–33M49	36 – 12
	41 – 12
	42 – 12
	47 – 17
93210–35321	31 – 4
93210–37160	36 – 20
	41 – 20
	42 – 20
	47 – 21
	47 – 34
93210–66001	32 – 69
93210–69MG6	36 – 36
	41 – 36
	42 – 36
	47 – 25
93210–94003	36 – 19
	41 – 19
	42 – 19
	47 – 20
	47 – 33
93211–02001	36 – 76
	41 – 76
	42 – 73
	47 – 29
93306–209U0	36 – 70
	41 – 70
93311–83280	36 – 3
	41 – 3
	42 – 3
93311–85894	36 – 50
	41 – 50
	42 – 51
93315–43061	36 – 73
	41 – 73
	42 – 70
93332–00048	42 – 68
93332–000A4	36 – 53
	41 – 53
93332–000A5	36 – 78
	41 – 78
93340–67011	36 – 56
	41 – 56
	42 – 54
93341–440U5	42 – 75
93399–99962	36 – 33
	41 – 33
	42 – 33
93410–10082	28 – 26

NUMERICAL INDEX
INDEX NUMERIQUE

PART NO. N° PIECES	REF. NO.
93410–36102	31 – 7
93420–50093	34 – 34
93501–04011	36 – 61
	41 – 61
	42 – 59
93501–08001	32 – 47
93503–16003	32 – 37
93505–32038	32 – 13
	32 – 34
93604–07M13	28 – 19
93604–35236	32 – 60
93605–10108	8 – 10
	8 – 12
	8 – 14
	8 – 16
93606–12019	3 – 3
	3 – 4
	4 – 3
	36 – 27
	41 – 27
	42 – 27
	47 – 39
93606–19M23	34 – 22
93608–16M16	34 – 7
	34 – 28
	35 – 3
	36 – 52
	37 – 4
	41 – 52
	42 – 53
	43 – 1
	44 – 12
	44 – 12
93700–06002	29 – 17
	30 – 1
94702–00400	1 – 8
	5 – 46
95022–06035	17 – 10
95023–06012	18 – 22
95027–06025	3 – 27
95380–06600	2 – 20
	10 – 4
95380–10600	44 – 3
95380–12600	29 – 32
95780–08300	2 – 17
95780–10300	30 – 19
95812–06025	35 – 8
95814–08020	20 – 3

PART NO. N° PIECES	REF. NO.
95D75–06025	28 – 23
	28 – 28
95D75–06040	35 – 14
95D75–08030	9 – 1
95D75–08060	11 – 4
95D95–06010	34 – 36
95D95–06012	18 – 8
	21 – 6
	21 – 23
	25 – 21
	25 – 30
	25 – 32
95D95–06014	5 – 39
	15 – 20
	25 – 6
95D95–06016	6 – 9
	10 – 18
	15 – 16
	20 – 7
	21 – 19
	21 – 31
	22 – 7
	23 – 3
	35 – 21
95D95–06020	18 – 2
	20 – 5
	21 – 12
	34 – 11
95D95–06025	9 – 13
	17 – 13
	18 – 15
	19 – 2
95D95–06030	5 – 32
	5 – 36
	17 – 11
95D95–08012	25 – 17
95D95–08016	20 – 2
95D95–08025	5 – 24
97513–06520	20 – 17
97513–08545	22 – 1
97585–06510	30 – 6
	30 – 21
97595–05516	30 – 9
	30 – 12
97595–05520	17 – 7
97602–04306	33 – 6
97602–04308	33 – 9
97780–50016	2 – 9

PART NO. N° PIECES	REF. NO.
97780–50620	20 – 32
97780–60520	26 – 19
97885–06010	29 – 8
	29 – 11
97985–04308	22 – 3
97985–06212	29 – 6
	30 – 3
97D95–06010	34 – 40
97D95–06012	34 – 31
97E75–06525	28 – 15
97E75–06620	11 – 6
97E75–08535	34 – 21
	35 – 2
97E75–08560	34 – 15
97E75–10535	34 – 6
97E75–10545	34 – 5
97E75–10570	37 – 6
	44 – 5
97E95–06512	29 – 20
97E95–06516	20 – 34
	45 – 4
97E95–06520	19 – 8
97E95–06525	29 – 4
97E95–06610	20 – 16
97E95–08516	20 – 36
	20 – 37
97E95–08520	36 – 38
	41 – 38
	42 – 38
98507–04008	13 – 38
98780–06530	3 – 31
98780–06550	3 – 35
99001–09600	36 – 15
	41 – 15
	42 – 15
99002–03600	32 – 40
99009–47500	36 – 55
	41 – 55
99530–08012	17 – 6
99530–14016	8 – 30

PART NO. N° PIECES	REF. NO.

PART NO. N° PIECES	REF. NO.

PART NO. N° PIECES	REF. NO.