YAMAHA

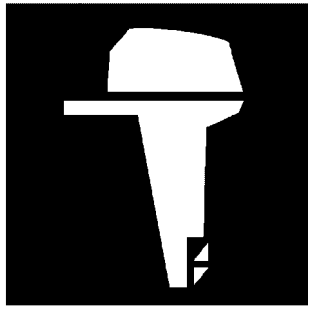

PARTS CATALOGUE
CATALOGUE DE PIECES DETACHEES

F300DET'26 (6JD8)
FL300DET'26 (6JE8)

YAMAHA
GENUINE
Parts & Accessories

316JD-300F1

( )

F300DET/FL300DET
PARTS CATALOGUE
©2026 by Yamaha Motor Co., Ltd.
1st edition, June 2026
All rights reserved.
Any reprinting or unauthorized use
without the written permission of
Yamaha Motor Co., Ltd.
is expressly prohibited.
Printed in Japan.

F300DET/FL300DET
CATALOGUE DE PIECES DETACHEES
©2026 par Yamaha Motor Co., Ltd.
1re édition, juin 2026
Tous droits réservés
Toute réimpression ou utilisation
non autorisée sans la permission écrite
de Yamaha Motor Co., Ltd.
est formellement interdite.
Imprimé au Japon

FOREWORD

This Parts Catalogue is related to the parts for the model(s) on the cover page. When you are ordering replacement parts, please refer to this Parts Catalogue and quote both part numbers and part names correctly.

1. Modifications or additions which have been made after the issue of the Parts Catalogue will be announced in the Parts News.
   It is advisable that you make the necessary corrections to the Parts Catalogue according to the Parts News.

2. Abbreviations
   The following abbreviations are used in this Parts Catalogue.
   "UR" Use specified parts number.
   "UN" Use as many as needed.
   "AP" Alternate Parts
   "LM" Locally Made (Parts need to be ordered locally)
   "F#" Frame No. (Applicable machine No.)
   "O/S" Over Size

3. The number of components for assembly
   - Parts, which are to be supplied in an assembly, are listed with a dot (.) in front of the part name as shown below.
   - The numeral appearing to the right of each component part indicates the quantity of parts for each assembly unit.

PART NO.	DESCRIPTION	Q'TY	REMARKS
2F5–83310–60	FRONT FLASHER LIGHT ASSY	2	
115–83311–60	.BULB (6V–18W)	1	

4. Applicable colours of graphics are represented in the "REMARKS" as shown below.

PART NO.	DESCRIPTION	Q'TY	REMARKS
2N4–24110–00–X5	FUEL TANK COMP.	2	MXR
3J1–24240–10	.GRAPHIC, FUEL TANK	1	FOR MXR

5. Note that the illustrations for reference in finding parts numbers are not to be used for assembling. When assembling, please use the applicable service manual.

6. The asterisk (*) before a reference number indicates modified items after the first edition.

7. Applicable Serial No.
   Engine Serial No.

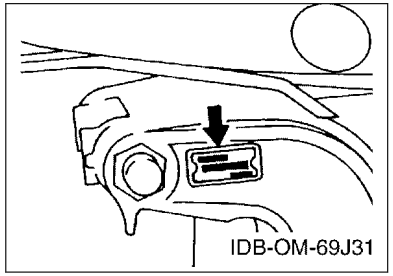

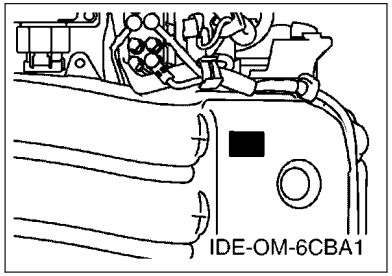

8. Applicable Engine Starting Serial No.

Model	Serial No.	Model	Serial No.
F300D	6JD-1011299	FL300D	6JE-1006778

9. Applicable Colour Code

Abbreviation	Colour Name	Colour Code
DBN1	DARK BLUISH GRAY 1	008D

10. Quantity Column Information

Column No.	Name Of Q'ty Column	Applicable Model
1	6JD8	F300DET
2	6JE8	FL300DET

AVANT–PROPOS

Ce catalogue de pièces détachées concerne les pièces pour le(s) modèle(s) indiqué(s) sur la page de couverture. Lorsque vous commandez des pièces de rechange, veuillez vous référer à ce catalogue de pieces détachées et indiquer clairement les numéros et les noms des pièces détachées.

1. Les modifications ou ajouts ayant été effectués après la parution du catalogue de pièces détachées seront décrits dans les Bulletins d'information concernant les pièces détachées.
   Il est recommandé que vous apportiez les corrections nécessaires au catalogue des pièces détachées en vous référant aux Bulletins d'information.

2. Abréviations
   Dans ce catalogue, les abréviations suivantes sont utilisées:
   "UR" Utiliser le numéro de pièces spécifié.
   "UN" Utiliser autant que nécessaire.
   "AP" Pièces de substitution
   "LM" Fabrication locale (les pièces doivent être commandées localement.)
   "F#" N° de cadre (applicable au N° de série)
   "O/S" Surdimensionné

3. Nombre de pièces d'un assemblage
   - Les pièces fournies comme composants d'un assemblage sont précédées d'un point (.) de la manière indiquée ci–dessous.
   - Le chiffre apparaissant à la droite de chaque composant indique la quantité de pièces pour chaque unité d'assemblage.

N° PIECES	DESCRIPTION	QTE	REMARQUES
2F5–83310–60	ENS. CLIGNOTANT AVANT	2	
115–83311–60	.AMPOULE (6V–18W)	1	

4. Les couleurs concernant les graphiques sont indiquées dans la colonne "REMARQUES", comme indiqué ci–dessous.

N° PIECES	DESCRIPTION	QTE	REMARQUES
2N4–24110–00–X5	RESERVOIR A ESSENCE.	2	MXR
3J1–24240–10	.GRAPHIQUE	1	POUR MXR

5. Veuillez noter que les illustrations sont indiquées à titre de référence pour trouver les numéros de pièces, non pour être utilisées lors de l'assemblage. Lors de l'assemblage, veuillez utiliser le manuel d'entretien adéquat.

6. L'astérisque (*) placé devant un numéro de référence indique des éléments qui ont été modifiés après la première édition.

7. N° de série applicable
   N° de Série du moteur

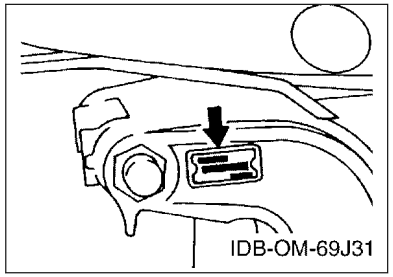

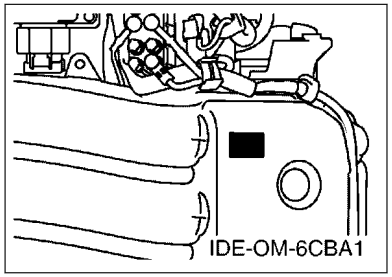

8. N° de série initial du moteur applicable

Modèle	N° de série	Modèle	N° de série
F300D	6JD-1011299	FL300D	6JE-1006778

9. Code couleur applicable

Abréviation	Nom de la couleur	Code couleur
DBN1	DARK BLUISH GRAY 1	008D

10. Informations relatives à la colonne Quantité

N° de la colonne	Nom de la colonne Qté	Modèle applicable
1	6JD8	F300DET
2	6JE8	FL300DET

CONTENTS

SCHEDULED SERVICE PARTS....1
TOP COWLING....2
CYLINDER & CRANKCASE 1....3
CRANKSHAFT & PISTON....5
CYLINDER & CRANKCASE 2....6
CYLINDER & CRANKCASE 3....8
CYLINDER & CRANKCASE 4....9
VALVE....10
INTAKE 1....13
INTAKE 2....14
THROTTLE BODY ASSY 1....16
THROTTLE BODY ASSY 2....17
FUEL INJECTION PUMP 1....18
FUEL INJECTION PUMP 2....20
FUEL 1....21
FUEL 2....23
GENERATOR....24
ELECTRICAL 1....25
ELECTRICAL 2....27
ELECTRICAL 3....28
ELECTRICAL 4....30
ELECTRICAL 5....32
STARTING MOTOR....33
BOTTOM COWLING 1....34
BOTTOM COWLING 2....36
BOTTOM COWLING 3....38
CONTROL....39
BRACKET 1....41
BRACKET 2....43
POWER TRIM & TILT ASSY 1....45
POWER TRIM & TILT ASSY 2....49
UPPER CASING....50
OIL PAN....52
LOWER CASING & DRIVE 1....53
LOWER CASING & DRIVE 2....57
LOWER CASING & DRIVE 3....59
LOWER CASING & DRIVE 4....63
STEERING GUIDE ATTACHMENT 1....65
STEERING GUIDE ATTACHMENT 2....66
OPTIONAL PARTS 1....67
OPTIONAL PARTS 2....68
OPTIONAL PARTS 3....69
REPAIR KIT 1....70
REPAIR KIT 2....71

INDEX

NUMERICAL INDEX....73

TABLE DES MATIERES

PIECES MAINTENANCE PERIODIQUE.....1
CAPOT SUPERIEUR..... 2
CYLINDRE & CARTER 1..... 3
VILEBREQUIN & PISTON.....5
CYLINDRE & CARTER 2..... 6
CYLINDRE & CARTER 3..... 8
CYLINDRE & CARTER 4..... 9
SOUPAPE..... 10
ADMISSION 1.....13
ADMISSION 2.....14
CARTER D'ACCELERATEUR 1.....16
CARTER D'ACCELERATEUR 2.....17
POMPE A INJECTEUR 1..... 18
POMPE A INJECTEUR 2..... 20
CARBURANT 1..... 21
CARBURANT 2..... 23
GENERATRICE.....24
PARTIE ELECTRIQUE 1.....25
PARTIE ELECTRIQUE 2.....27
PARTIE ELECTRIQUE 3.....28
PARTIE ELECTRIQUE 4.....30
PARTIE ELECTRIQUE 5.....32
DEMARREUR ELECTRIQUE.....33
CAPOT INFERIEUR 1.....34
CAPOT INFERIEUR 2.....36
CAPOT INFERIEUR 3.....38
COMMANDE..... 39
SUPPORT 1..... 41
SUPPORT 2..... 43
PUISSANCE PARER ET INCLINER 1..... 45
PUISSANCE PARER ET INCLINER 2..... 49
FOURREAU.....50
VENTILATEUR D'HUILE..... 52
BOITIER D'HELICE TRANSMISSION1.....53
BOITIER D'HELICE TRANSMISSION2.....57
BOITIER D'HELICE TRANSMISSION3.....59
BOITIER D'HELICE TRANSMISSION4.....63
DIRECTION GUIDE ACCESSOIRE 1.....65
DIRECTION GUIDE ACCESSOIRE 2.....66
PIECES OPTIONNELLES 1.....67
PIECES OPTIONNELLES 2.....68
PIECES OPTIONNELLES 3.....69
KITS DE REPARATION 1..... 70
KITS DE REPARATION 2..... 71

INDEX

INDEX NUMERIQUE.....73

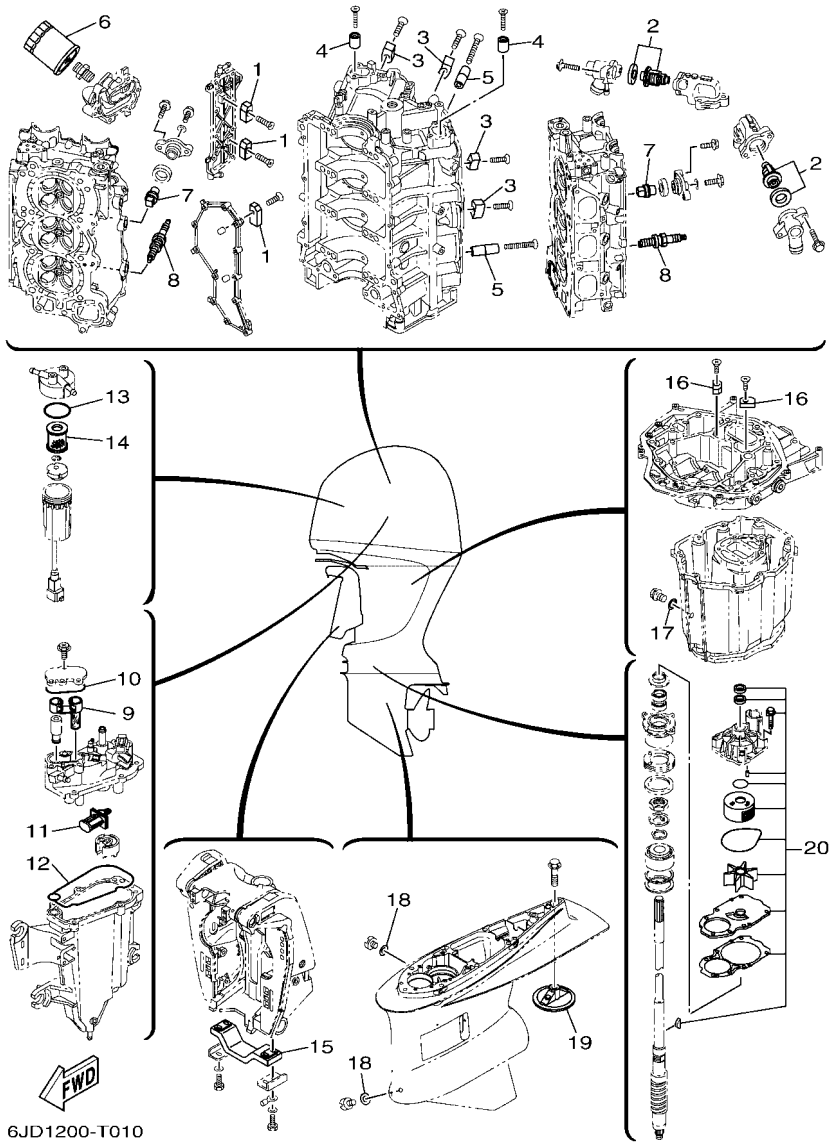

FIG. 1 SCHEDULED SERVICE PARTS — PIECES MAINTENANCE PERIODIQUE

REF. NO.	PART NO. N° PIECES	DESCRIPTION DESCRIPTION	6JD8	6JE8				REMARKS REMARQUES
1	63P–11325–01	ANODE ANODE	4	4				
2	6CE–12411–00	THERMOSTAT THERMOSTAT	2	2				
3	6AW–1132P–00	ANODE 5 ANODE 5	4	4				
4	68T–11325–00	ANODE ANODE	2	2				
5	6AW–1132N–01	ANODE 4 ANODE 4	2	2				
6	N26–13440–04	ELEMENT ASSY, OIL CLEANER ELEMENT, FILTRE A HUILE	1	1				
7	6ML–11325–00	ANODE ANODE	8	8				
8	94702–00400	PLUG, SPARK (NGK LFR6A-11) BOUGIE D'ALLUMAGE(NGK LFR6A-11	6	6				
9	6CB–24501–01	FILTER, FUEL FILTRE	1	1				
10	6CB–13016–00	O-RING JOINT TORIQUE	1	1				
11	63P–13915–00	FILTER FILTRE	1	1				
12	6CB–14984–00	GASKET, FLOAT CHAMBER JOINT, CUVE DE FLOTTEUR	1	1				
13	6P3–24564–00	GASKET JOINT	1	1				
14	6P3–24563–02	ELEMENT, FILTER ELEMENT, FILTRE	1	1				
15	6G5–45251–02	ANODE ANODE	1	1				
16	63P–11325–11	ANODE ANODE	2	2				
17	90430–14M09	GASKET JOINT	1	1				
18	90430–08003	GASKET JOINT	2	2				
19	6CE–45373–00	ANODE ANODE	1	1				
20	6JD–W0078–00	WATER PUMP REPAIR KIT KIT DE REPARATION DE LA POMPE	1	1				

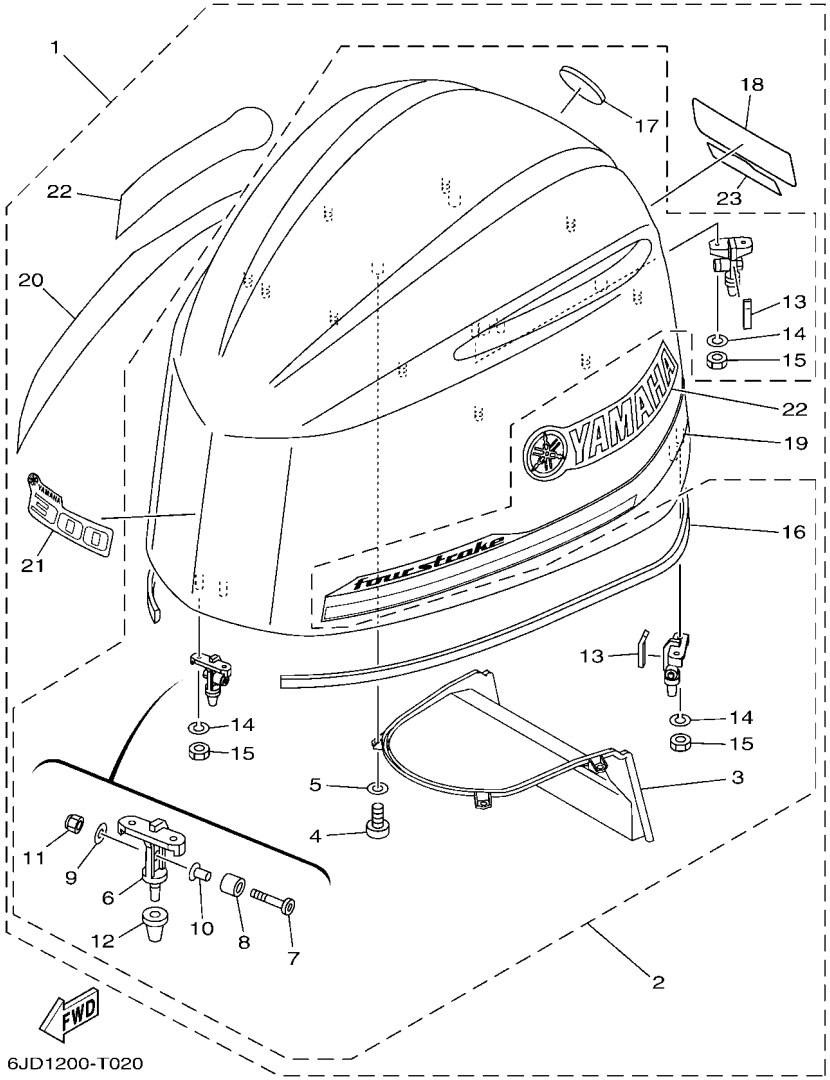

FIG. 2 TOP COWLING — CAPOT SUPERIEUR

REF. NO.	PART NO. N° PIECES	DESCRIPTION DESCRIPTION	6JD8	6JE8				REMARKS REMARQUES
1	6JD–42610–01	TOP COWLING ASSY CAPOT (ENS.)	1	1				
2	6CE–4261A–02–8D	.TOP COWLING W/O GRAPHICS .CAPOT SUPERIEUR SANS GRAPHIQUE	1	1				
3	6CE–42635–00	..DUCT, WATER SEPARATOR ..CONDUIT, SEPARATEUR DE L'EAU	1	1				
4	97780–60516	..SCREW, TAPPING ..VIS, TETE BOMBEE	4	4				
5	92990–06200	..WASHER, PLAIN ..RONDELLE, PLATE	4	4				
6	6CB–42647–B0	..HOLDER, CLAMP BAND ..SUPPORT, SANDOW DE SERRAGE	3	3				
7	90111–08078	..BOLT, HEXAGON SOCKET BUTTON ..BOULON	3	3				
8	90387–10094	..COLLAR ..COLLERETTE	3	3				
9	92990–08600	..WASHER, PLATE ..RONDELLE, PLATE	3	3				
10	90387–08M45	..COLLAR ..COLLERETTE	3	3				
11	95780–08300	..NUT, FLANGE ..ECROU	3	3				
12	6AW–42663–01	..DAMPER 2 ..AMORTISSEUR 2	3	3				
13	6CB–42134–01	..COVER ..CAPOT	2	2				
14	92990–06100	..WASHER, SPRING ..RONDELLE, GROWER	6	6				
15	95380–06600	..NUT, HEXAGON ..ECROU	6	6				
16	6CB–42628–00	..SEAL ..JOINT	1	1				
17	6KN–42697–00	..TUNING FORK MARK ..MARQUE, YAMAHA	1	1				
18	6JD–42678–01	.GRAPHIC, REAR .ADHESIF, ARRIERE	1	1				
19	6JD–42675–01	.GRAPHIC, SIDE 1 .EMBLEME	1	1				
20	6JD–42676–01	.GRAPHIC, SIDE 2 .EMBLEME	1	1				
21	6JD–42677–01	.GRAPHIC, FRONT .ADHESIF, AVANT	1	1				
22	6JD–42681–01	.MARK, COWLING .ADHESIF, CAPOT	2	2				
23	6S1–4267A–01	.GRAPHIC, REAR 2 .ADHESIF, ARRIERE 2	1	1				

FIG. 3 CYLINDER & CRANKCASE 1 — CYLINDRE & CARTER 1

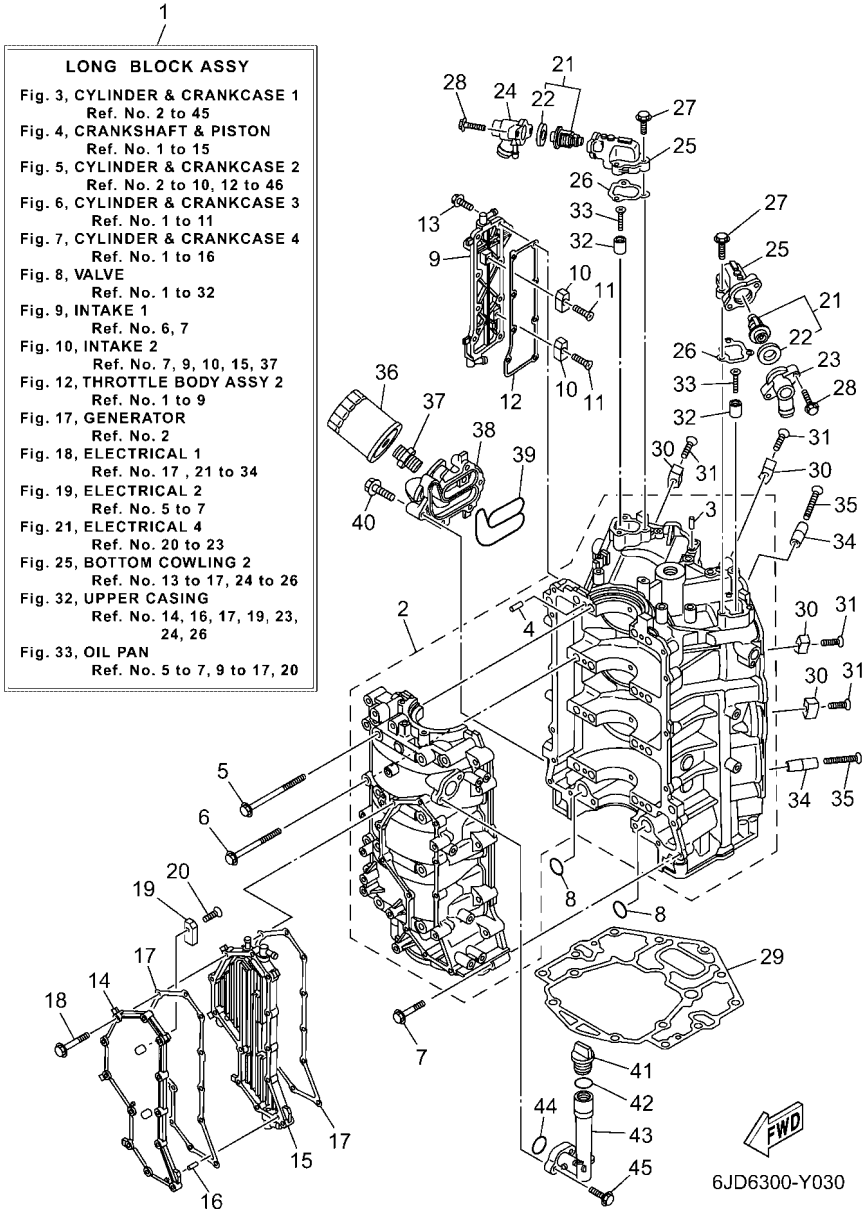

REF. NO.	PART NO. N° PIECES	DESCRIPTION DESCRIPTION	6JD8	6JE8				REMARKS REMARQUES
1	6JD–11000–04	LONG BLOCK ASSY SOUS-ASSEMBLEE DU MOTEUR	1	1				
2	6CE–15100–10	CRANKCASE ASSY CARTER DE MOTEUR COMPLET	1	1				
3	93606–12019	.PIN, DOWEL .GOUPILLE	3	3				
4	93606–12019	.PIN, DOWEL .GOUPILLE	8	8				
5	6CB–15187–00	BOLT BOULON	8	8				
6	6CB–15481–00	BOLT 1 BOULON 1	8	8				
7	90105–08175	BOLT, FLANGE BOULON, A COLLERETTE	16	16				
8	93210–26658	O-RING JOINT TORIQUE	2	2				
9	6CE–1131C–00–9S	COVER, JOINT COUVERCLE, RACCORDEMENT	1	1				
10	63P–11325–01	ANODE ANODE	2	2				
11	90151–06M02	SCREW, COUNTERSUNK VIS, TETE NOYEE	2	2				
12	6ML–1131B–00	GASKET, COVER JOINT, COUVERCLE	1	1				
13	90105–06M07	BOLT, FLANGE BOULON, A COLLERETTE	8	8				
14	6CE–15411–00–9S	COVER, CRANKCASE 1 COUVERCLE 1, CARTER MOTEUR	1	1				
15	6CE–15421–10–9S	COVER, CRANKCASE 2 COUVERCLE 2, CARTER MOTEUR	1	1				
16	91690–40010	PIN, SPRING AGRAFFE	1	1				
17	6CB–15451–01	GASKET, CRANKCASE COVER 1 JOINT, COUVERCLE DE CARTER 1	2	2				
18	90105–06151	BOLT, FLANGE BOULON, A COLLERETTE	12	12				
19	63P–11325–01	ANODE ANODE	2	2				
20	90151–06M02	SCREW, COUNTERSUNK VIS, TETE NOYEE	2	2				
21	6CE–12411–00	THERMOSTAT THERMOSTAT	2	2				
22	67F–12412–00	.SEAL, THERMOSTAT .JOINT, THERMOSTAT	1	1				
23	6CE–12413–B0–9S	COVER, THERMOSTAT COUVERCLE, THERMOSTAT	1	1				
24	6CE–12413–A0–9S	COVER, THERMOSTAT COUVERCLE, THERMOSTAT	1	1				
25	6CB–12422–10–9S	COVER, HOUSING COUVERCLE DE CARTER DE POMPE	2	2				
26	6CB–12427–11	GASKET, HOUSING COVER 1 JOINT, COUVERCLE DE CARTER 1	2	2				
27	95027–06025	BOLT, FLANGE BOULON, A COLLERETTE	6	6				

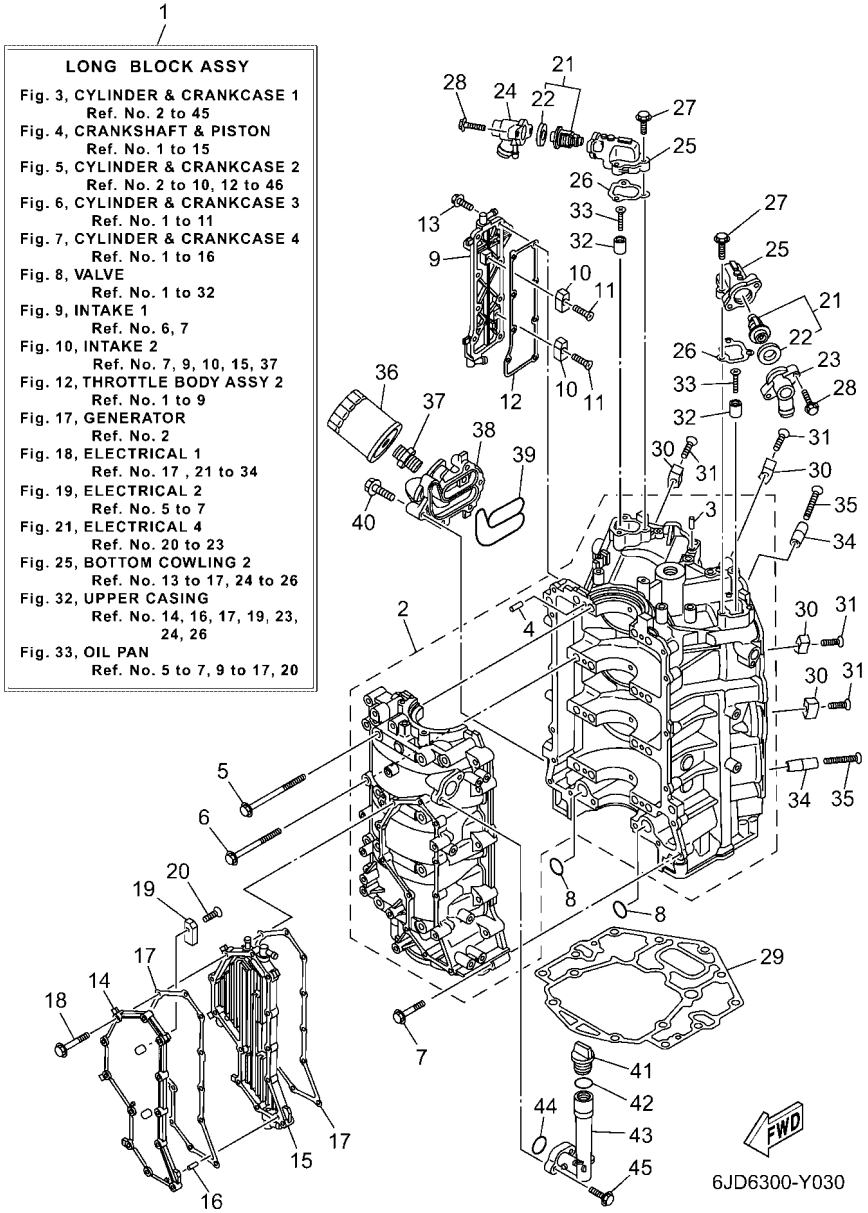

FIG. 3 CYLINDER & CRANKCASE 1 — CYLINDRE & CARTER 1

REF. NO.	PART NO. N° PIECES	DESCRIPTION DESCRIPTION	6JD8	6JE8				REMARKS REMARQUES
28	90105–06037	BOLT, FLANGE BOULON, A COLLERETTE	4	4				
29	6KA–11351–00	GASKET, CYLINDER JOINT, D'EMBASE	1	1				
30	6AW–1132P–00	ANODE 5 ANODE 5	4	4				
31	98780–06530	SCREW, FLAT HEAD VIS A TETE FRAISEE	4	4				
32	68T–11325–00	ANODE ANODE	2	2				
33	90151–05M05	SCREW, COUNTERSUNK VIS, TETE NOYEE	2	2				
34	6AW–1132N–01	ANODE 4 ANODE 4	2	2				
35	98780–06550	SCREW, FLAT HEAD VIS A TETE FRAISEE	2	2				
36	N26–13440–04	ELEMENT ASSY, OIL CLEANER ELEMENT, FILTRE A HUILE	1	1				
37	90401–19001	BOLT, UNION BOULON, RACCORD	1	1				
38	6CE–13446–10–9S	CONNECTOR CONNECTEUR	1	1				
39	6CB–13477–00	GASKET JOINT	1	1				
40	90105–06151	BOLT, FLANGE BOULON, A COLLERETTE	5	5				
41	6G8–15363–00	PLUG, OIL PLOT, HUILE	1	1				
42	93210–24M79	O-RING JOINT TORIQUE	1	1				
43	6CB–15319–00	JOINT JOINT	1	1				
44	93210–27370	O-RING JOINT TORIQUE	1	1				
45	90105–06037	BOLT, FLANGE BOULON, A COLLERETTE	2	2				

FIG. 4 CRANKSHAFT & PISTON — VILEBREQUIN & PISTON

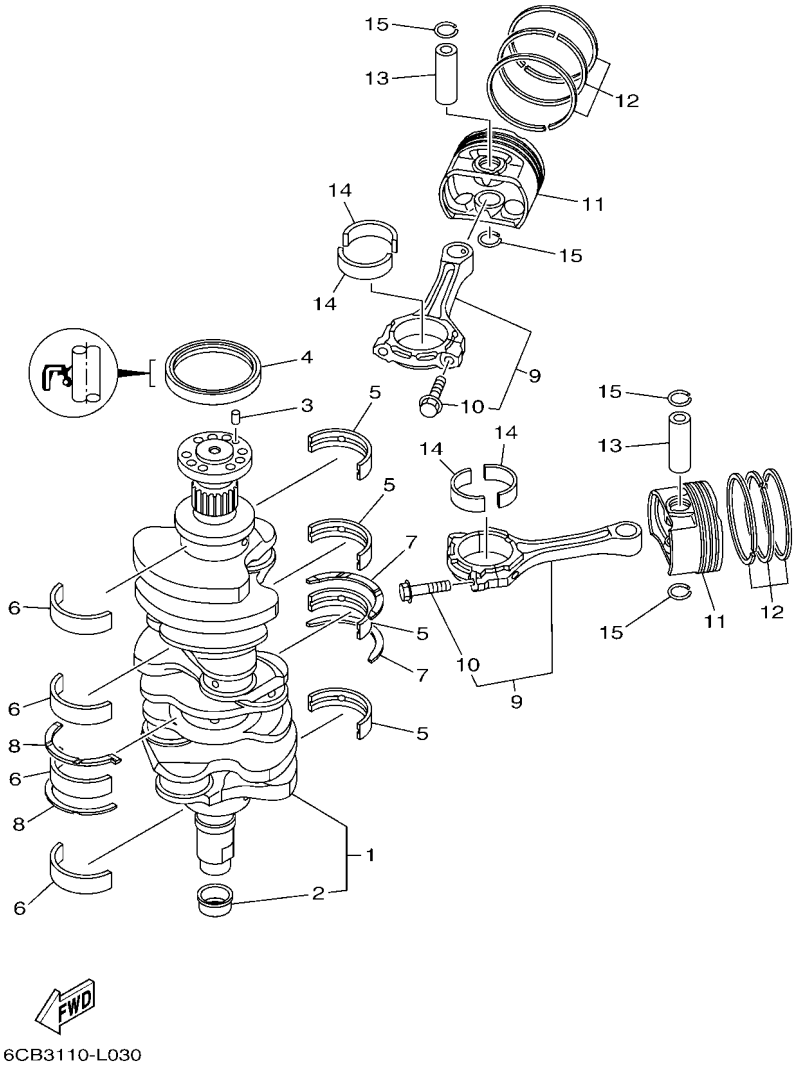

REF. NO.	PART NO. N° PIECES	DESCRIPTION DESCRIPTION	6JD8	6JE8				REMARKS REMARQUES
1	6CB–11410–00	CRANKSHAFT VILEBREQUIN COMPLET	1	1				
2	6CB–11478–00	.COLLAR .COLLERETTE	1	1				
3	93606–12019	PIN, DOWEL GOUPILLE	1	1				
4	93102–85008	OIL SEAL JOINT SPY	1	1				
5	6CB–11416–00	PLANE BEARING, CRANKSHAFT 1 COUSSINET DE VILEBREQUIN 1	4	4				UR PURPLE UR PURPLE
	6CB–11416–10	PLANE BEARING, CRANKSHAFT 1 COUSSINET DE VILEBREQUIN 1	4	4				UR YELLOW UR YELLOW
	6CB–11416–20	PLANE BEARING, CRANKSHAFT 1 COUSSINET DE VILEBREQUIN 1	4	4				UR RED UR RED
	6CB–11416–30	PLANE BEARING, CRANKSHAFT 1 COUSSINET DE VILEBREQUIN 1	4	4				UR GREEN UR GREEN
	6CB–11416–40	PLANE BEARING, CRANKSHAFT 1 COUSSINET DE VILEBREQUIN 1	4	4				UR BROWN UR BROWN
6	6CB–11417–00	PLANE BEARING, CRANKSHAFT 2 COUSSINET DE VILEBREQUIN 2	4	4				UR PURPLE UR PURPLE
	6CB–11417–10	PLANE BEARING, CRANKSHAFT 2 COUSSINET DE VILEBREQUIN 2	4	4				UR YELLOW UR YELLOW
	6CB–11417–20	PLANE BEARING, CRANKSHAFT 2 COUSSINET DE VILEBREQUIN 2	4	4				UR RED UR RED
	6CB–11417–30	PLANE BEARING, CRANKSHAFT 2 COUSSINET DE VILEBREQUIN 2	4	4				UR GREEN UR GREEN
	6CB–11417–40	PLANE BEARING, CRANKSHAFT 2 COUSSINET DE VILEBREQUIN 2	4	4				UR BROWN UR BROWN
7	6CB–11426–03	BEARING, THRUST 1 ROULEMENT DE BUTEE 1	2	2				
8	6CB–11427–03	BEARING, THRUST 2 ROULEMENT DE BUTEE 2	2	2				
9	6CB–W1165–10	CONNECTING ROD ASSY BIELLE COMPLETTE	6	6				
10	63P–11654–10	.BOLT, CONNECTING ROD .BOULON, BIELLE	2	2				
11	6CE–11631–02	PISTON (STD) PISTON (STD)	6	6				
12	6GR–11603–00	PISTON RING SET (STD) JEU DE SEGMENTS (STD)	6	6				
13	6CB–11633–00	PIN, PISTON AXE, PISTON	6	6				
14	6JD–11656–00	PLANE BEARING, CONNECTING ROD ROULEMENT DE BIELLE	12	12				UR BLACK UR BLACK
	6JD–11656–10	PLANE BEARING, CONNECTING ROD ROULEMENT DE BIELLE	12	12				UR PINK UR PINK
	6JD–11656–20	PLANE BEARING, CONNECTING ROD ROULEMENT DE BIELLE	12	12				UR RED UR RED
15	K0F–A3233–00	RING,HOLE SNAP JONC	12	12				

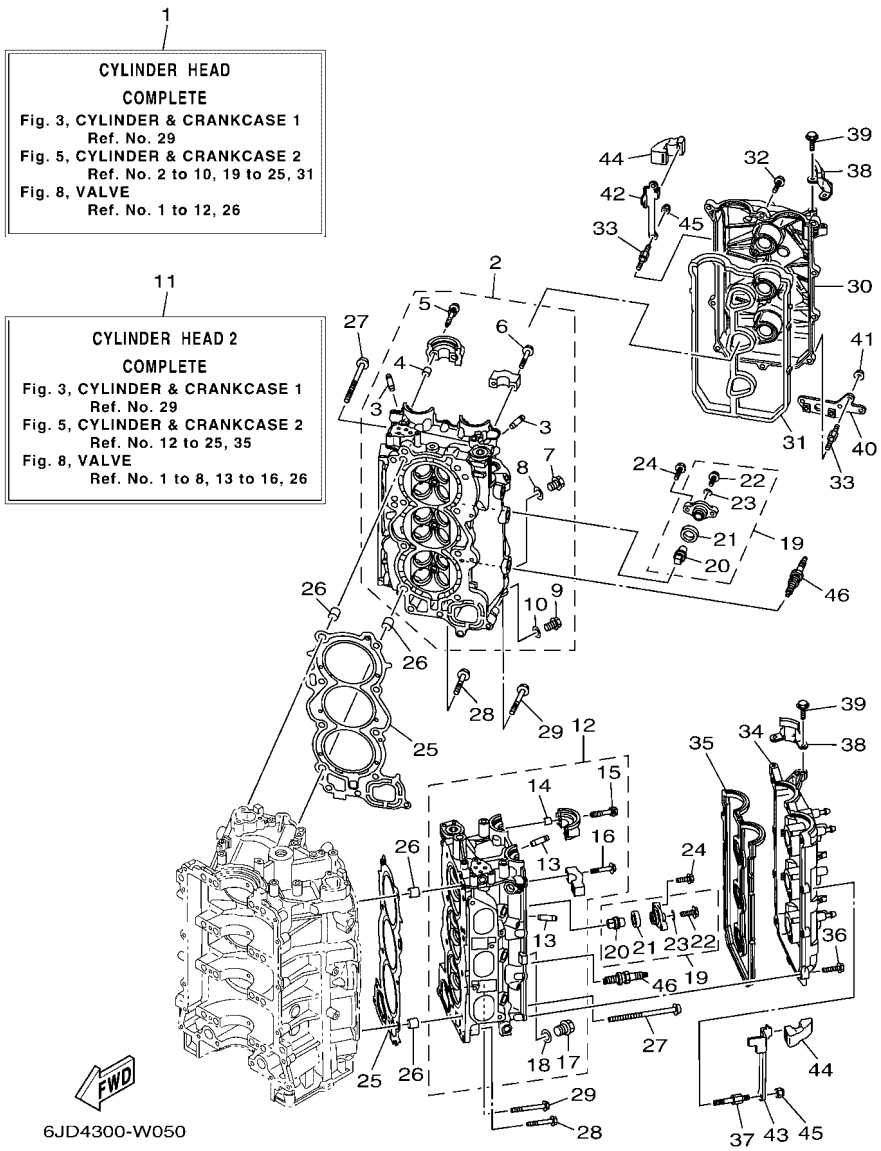

FIG. 5 CYLINDER & CRANKCASE 2 — CYLINDRE & CARTER 2

REF. NO.	PART NO. N° PIECES	DESCRIPTION DESCRIPTION	6JD8	6JE8				REMARKS REMARQUES
1	6JD–W009A–12–9S	CYLINDER HEAD COMPLETE CULASSE (ENS.)	1	1				
2	6CE–11110–12–9S	CYLINDER HEAD ASSY JEU DE CULASSE	1	1				
3	6S5–11133–10	.GUIDE, VALVE 1 .GUIDE, SOUPAPE 1	12	12				
4	91809–08006	.PIN, DOWEL .GOUJON, D'ASSEMBLAGE	4	4				
5	90119–07001	.BOLT, WITH WASHER .BOULON, AVEC RONDELLE	4	4				
6	90119–07234	.BOLT, WITH WASHER .BOULON, AVEC RONDELLE	12	12				
7	90340–18M09	.PLUG, STRAIGHT SCREW .PLOT, FILETE DROIT	1	1				
8	90201–186F1	.WASHER, PLATE .RONDELLE, PLATE	1	1				
9	90340–14M06	.PLUG, STRAIGHT SCREW .PLOT, FILETE DROIT	1	1				
10	90430–14115	.GASKET .JOINT	1	1				
11	6JD–W009C–12–9S	CYLINDER HEAD 2 COMPLETE CULASSE 2	1	1				
12	6CE–11120–12–9S	CYLINDER HEAD ASSY 2 CULASSE 2	1	1				
13	6S5–11133–10	.GUIDE, VALVE 1 .GUIDE, SOUPAPE 1	12	12				
14	91809–08006	.PIN, DOWEL .GOUJON, D'ASSEMBLAGE	4	4				
15	90119–07001	.BOLT, WITH WASHER .BOULON, AVEC RONDELLE	4	4				
16	90119–07234	.BOLT, WITH WASHER .BOULON, AVEC RONDELLE	12	12				
17	90340–18M09	.PLUG, STRAIGHT SCREW .PLOT, FILETE DROIT	1	1				
18	90201–186F1	.WASHER, PLATE .RONDELLE, PLATE	1	1				
19	6ML–11301–00	ANODE COVER ASSY COUVERCLE ANODE (ENS.)	8	8				
20	6ML–11325–00	.ANODE .ANODE	1	1				
21	67F–11328–01	.GROMMET, ANODE .PASSE-FIL	1	1				
22	90105–06M07	.BOLT, FLANGE .BOULON, A COLLERETTE	1	1				
23	90430–06M03	.GASKET .JOINT	1	1				
24	95D95–08025	BOLT, FLANGE DEEP RECESS BOULON FIXATION	16	16				
25	6CB–11181–00	GASKET, CYLINDER HEAD 1 JOINT, DE CULASSE 1	2	2				
26	90387–11005	COLLAR COLLERETTE	4	4				
27	90149–11001	SCREW VIS	16	16				

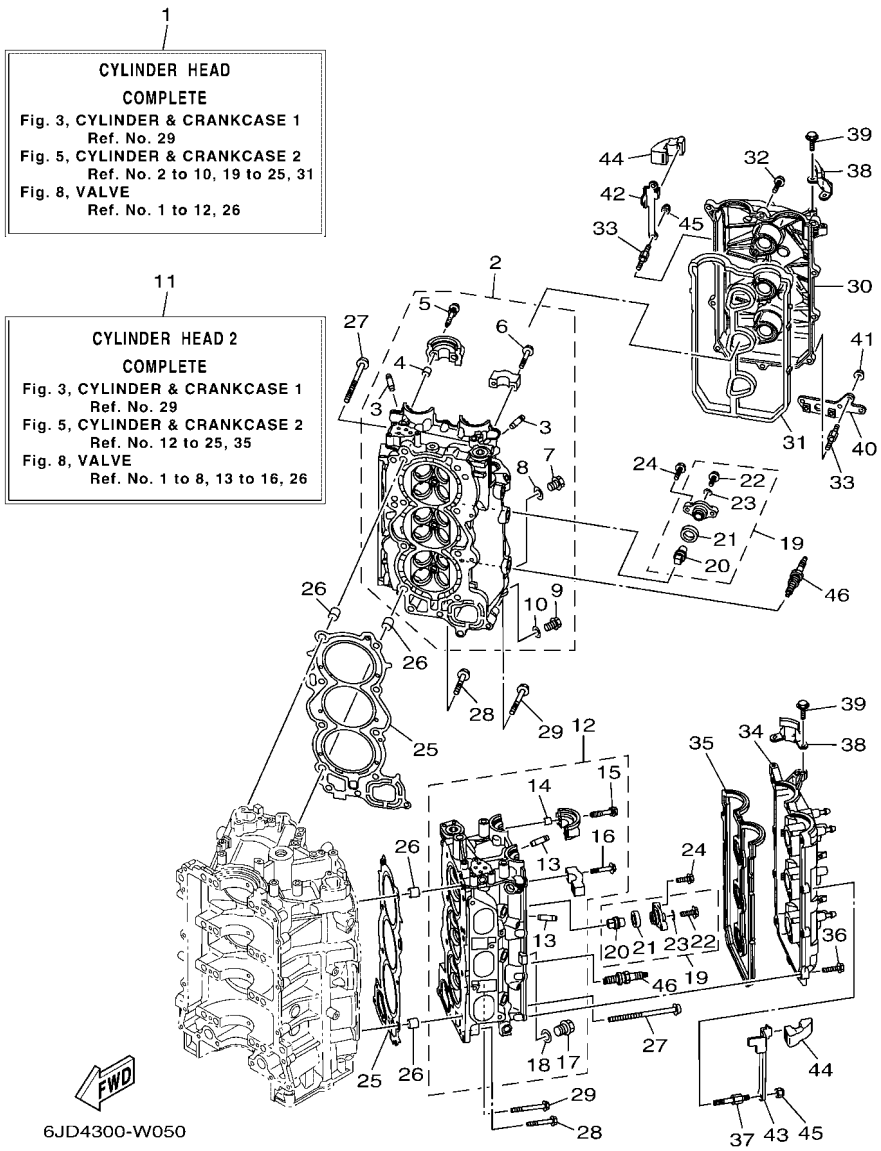

FIG. 5 CYLINDER & CRANKCASE 2 — CYLINDRE & CARTER 2

REF. NO.	PART NO. N° PIECES	DESCRIPTION DESCRIPTION	6JD8	6JE8				REMARKS REMARQUES
28	90105–08175	BOLT, FLANGE BOULON, A COLLERETTE	4	4				
29	90105–08220	BOLT, FLANGE BOULON, A COLLERETTE	2	2				
30	6CB–11191–02	COVER, CYLINDER HEAD 1 COUVERCLE, CULASSE 1	1	1				
31	6CB–11193–00	GASKET, HEAD COVER 1 JOINT, COUVERCLE DE CULASSE 1	1	1				
32	95D95–06030	BOLT, FLANGE DEEP RECESS BOULON FIXATION	9	9				
33	90109–06277	BOLT BOULON	4	4				
34	6CB–11192–02	COVER, CYLINDER HEAD 2 COUVERCLE, CULASSE 2	1	1				
35	6CB–11194–00	GASKET, HEAD COVER 2 JOINT, COUVERCLE DE CULASSE 2	1	1				
36	95D95–06030	BOLT, FLANGE DEEP RECESS BOULON FIXATION	11	11				
37	90109–06277	BOLT BOULON	2	2				
38	6AW–15142–00	GUIDE 1 GUIDE 1	2	2				
39	95D95–06014	BOLT, FLANGE DEEP RECESS BOULON FIXATION	4	4				
40	6CB–2134V–00	BRACKET SUPPORT	1	1				
41	90179–06M28	NUT ECROU	2	2				
42	6KW–11998–00	BRACKET 1 SUPPORT 1	1	1				
43	6KW–11999–00	BRACKET 2 SUPPORT 2	1	1				
44	6KW–42662–00	DAMPER AMORTISSEUR	2	2				
45	90185–06M07	NUT, SELF-LOCKING ECROU,AUTO-BLOQUANT	4	4				
46	94702–00400	PLUG, SPARK (NGK LFR6A-11) BOUGIE D'ALLUMAGE(NGK LFR6A-11	6	6				

FIG. 6 CYLINDER & CRANKCASE 3 — CYLINDRE & CARTER 3

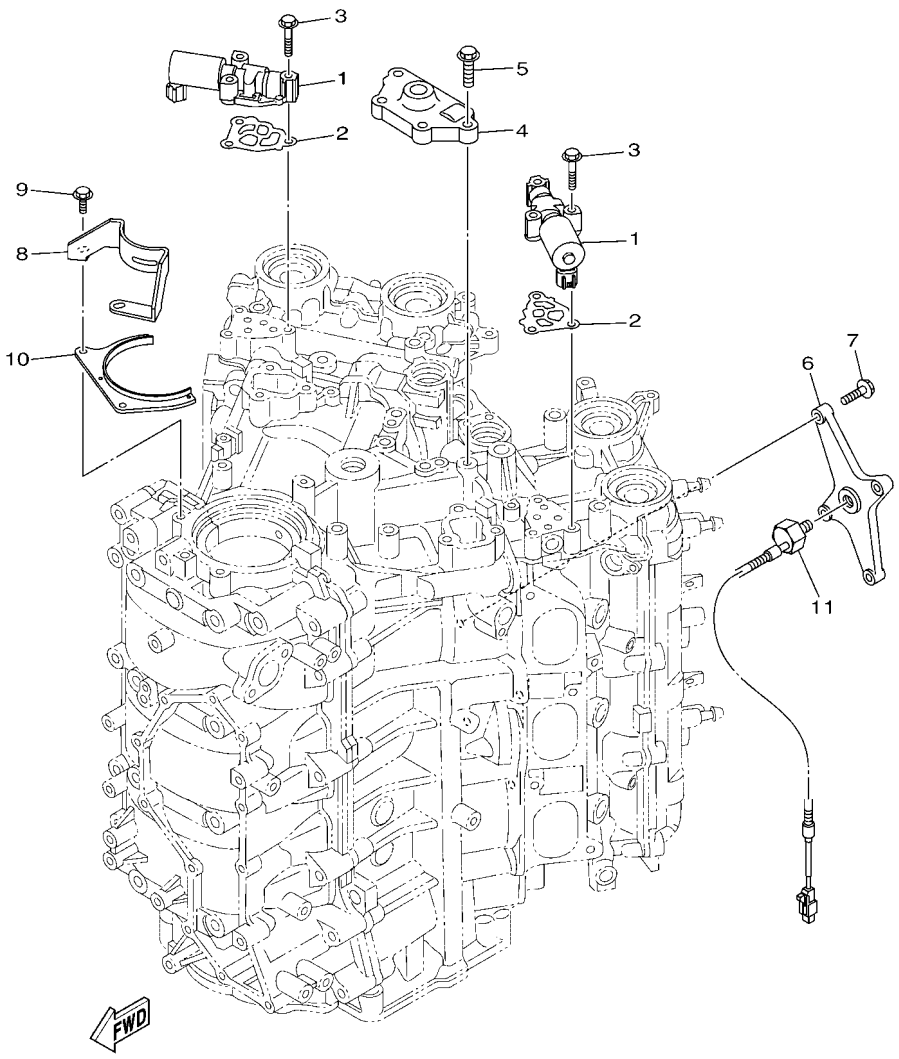

6CD6100-N060

REF. NO.	PART NO. N° PIECES	DESCRIPTION DESCRIPTION	6JD8	6JE8				REMARKS REMARQUES
1	6CB–86120–00	SOLENOID VALVE ASSY SOLENOIDE	2	2				
2	6CB–1242F–00	GASKET, FILTER JOINT, FILTRE	2	2				
3	90105–06035	BOLT, FLANGE BOULON, A COLLERETTE	6	6				
4	6CB–15544–00	STAY 1 SUPPORT 1	1	1				
5	90105–08178	BOLT, FLANGE BOULON, A COLLERETTE	4	4				
6	6CB–1135A–00	BRACKET SUPPORT	1	1				
7	90105–06037	BOLT, FLANGE BOULON, A COLLERETTE	4	4				
8	6CB–15142–00	GUIDE 1 GUIDE 1	1	1				
9	95D95–06016	BOLT, FLANGE DEEP RECESS BOULON FIXATION	2	2				
10	6CB–1149A–00	PLATE 1 FLAQUE 1	1	1				
11	6P2–85780–01	SENSOR, KNOCK SONDE DE COGNEMENT	1	1				

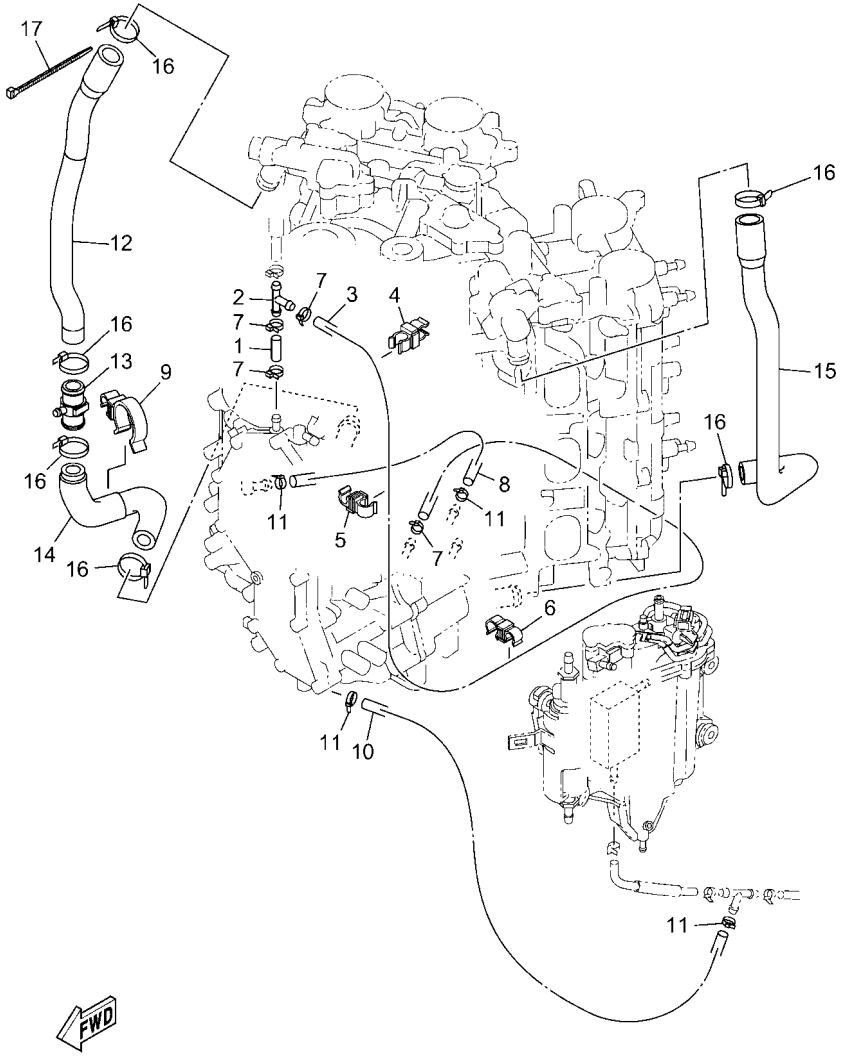

6CLF010-Y070

FIG. 7 CYLINDER & CRANKCASE 4 — CYLINDRE & CARTER 4

REF. NO.	PART NO. N° PIECES	DESCRIPTION DESCRIPTION	6JD8	6JE8				REMARKS REMARQUES
1	90445–09220	HOSE (L30) DURITE (L30)	1	1				
2	688–24378–00	PIPE, JOINT 3 DURITE RACCORDEMENT 3	1	1				
3	6CB–12576–10	HOSE 1 TUYAU 1	1	1				
4	90464–10M59	CLAMP BRIDE	1	1				
5	90464–09013	CLAMP BRIDE	1	1				
6	90464–12010	CLAMP BRIDE	1	1				
7	90465–11M10	CLAMP BRIDE	4	4				
8	6CB–12577–00	HOSE 2 TUYAU 2	1	1				
9	90464–26002	CLAMP BRIDE	1	1				
10	90445–096H2	HOSE (L280) DURITE (L280)	1	1				
11	90465–11M10	CLAMP BRIDE	4	4				
12	6ML–1244G–00	HOSE, 4 DURITE 4	1	1				
13	6CE–24378–00	PIPE, JOINT 3 DURITE RACCORDEMENT 3	1	1				
14	6CE–1244H–00	HOSE 5 DURITE 5	1	1				
15	6CB–1243E–00	HOSE 2 DURITE 2	1	1				
16	90465–11M59	CLAMP BRIDE	6	6				
17	90465–14M66	CLAMP BRIDE	1	1				

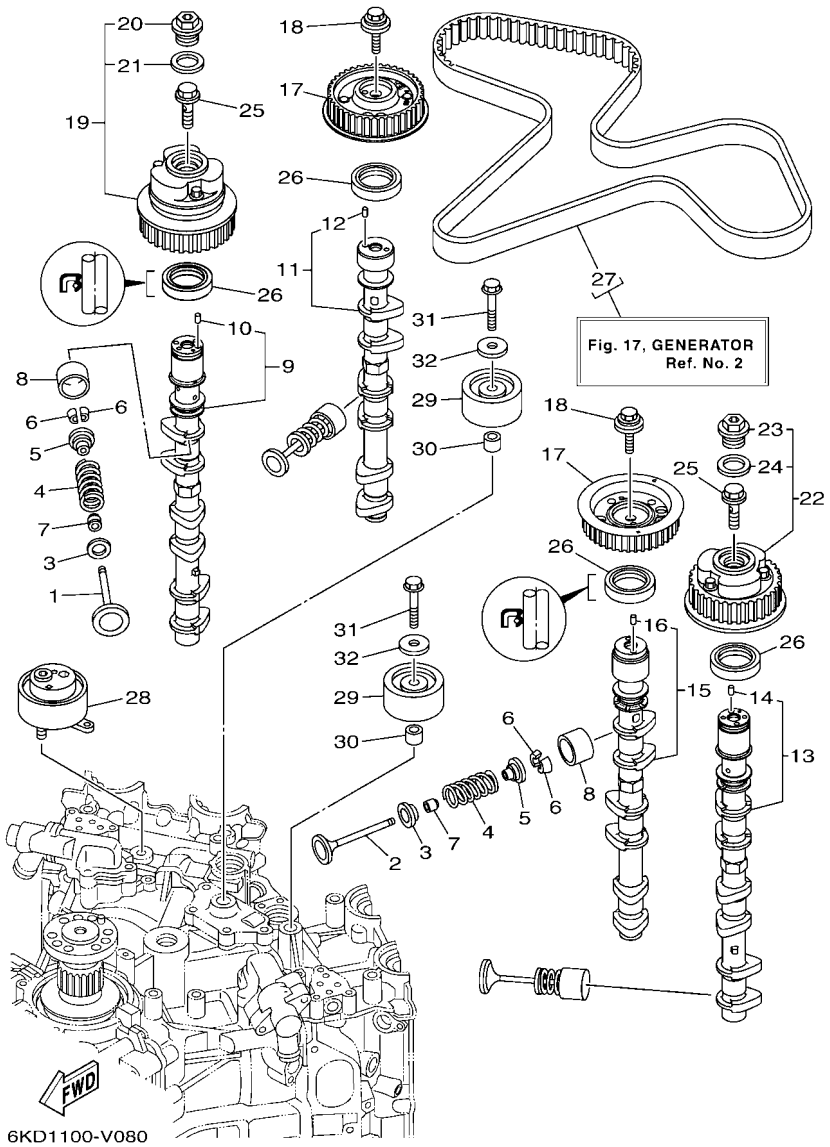

FIG. 8 VALVE — SOUPAPE

REF. NO.	PART NO. N° PIECES	DESCRIPTION DESCRIPTION	6JD8	6JE8				REMARKS REMARQUES
1	6CB–12111–00	VALVE, INTAKE SOUPAPE, ADMISSION	12	12				
2	6JD–12121–00	VALVE, EXHAUST SOUPAPE, ECHAPPEMENT	12	12				
3	K0F–A3743–00	SEAT, VALVE SPRING SIEGE, RESSORT DE SOUPAPE	24	24				
4	6CB–12113–00	SPRING, VALVE INNER RESSORT DE SOUPAPE, INTERNE	24	24				
5	K0F–A3741–00	RETAINER, VALVE SPRING BUTEE DE RESSORT DE SOUPAPA	24	24				
6	K0F–A3742–00	LOCK, VALVE SPRING RETAINER FRAISE, SOUPAPE	48	48				
7	51Y–12119–00	SEAL, VALVE STEM JOINT, QUEUE DE SOUPAPE	24	24				
8	K0F–A3751–00	LIFTER, VALVE (3.000) LEVE-SOUPAPE (3.000)	24	24				UR UR
	K0F–A3751–10	LIFTER, VALVE (3.025) LEVE-SOUPAPE (3.025)	24	24				UR UR
	K0F–A3751–20	LIFTER, VALVE (3.050) LEVE-SOUPAPE (3.050)	24	24				UR UR
	K0F–A3751–30	LIFTER, VALVE (3.075) LEVE-SOUPAPE (3.075)	24	24				UR UR
	K0F–A3751–40	LIFTER, VALVE (3.100) LEVE-SOUPAPE (3.100)	24	24				UR UR
	K0F–A3751–50	LIFTER, VALVE (3.122) LEVE-SOUPAPE (3.122)	24	24				UR UR
	K0F–A3751–60	LIFTER, VALVE (3.142) LEVE-SOUPAPE (3.142)	24	24				UR UR
	K0F–A3751–70	LIFTER, VALVE (3.162) LEVE-SOUPAPE (3.162)	24	24				UR UR
	K0F–A3751–80	LIFTER, VALVE (3.182) LEVE-SOUPAPE (3.182)	24	24				UR UR
	K0F–A3751–90	LIFTER, VALVE (3.202) LEVE-SOUPAPE (3.202)	24	24				UR UR
	K0F–A3751–A0	LIFTER, VALVE (3.222) LEVE-SOUPAPE (3.222)	24	24				UR UR
	K0F–A3751–B0	LIFTER, VALVE (3.242) LEVE-SOUPAPE (3.242)	24	24				UR UR
	K0F–A3751–C0	LIFTER, VALVE (3.262) LEVE-SOUPAPE (3.262)	24	24				UR UR
	K0F–A3751–D0	LIFTER, VALVE (3.282) LEVE-SOUPAPE (3.282)	24	24				UR UR
	K0F–A3751–E0	LIFTER, VALVE (3.302) LEVE-SOUPAPE (3.302)	24	24				UR UR
	K0F–A3751–F0	LIFTER, VALVE (3.322) LEVE-SOUPAPE (3.322)	24	24				UR UR
	K0F–A3751–G0	LIFTER, VALVE (3.342) LEVE-SOUPAPE (3.342)	24	24				UR UR
	K0F–A3751–H0	LIFTER, VALVE (3.362) LEVE-SOUPAPE (3.362)	24	24				UR UR
	K0F–A3751–J0	LIFTER, VALVE (3.382) LEVE-SOUPAPE (3.382)	24	24				UR UR
	K0F–A3751–K0	LIFTER, VALVE (3.402) LEVE-SOUPAPE (3.402)	24	24				UR UR

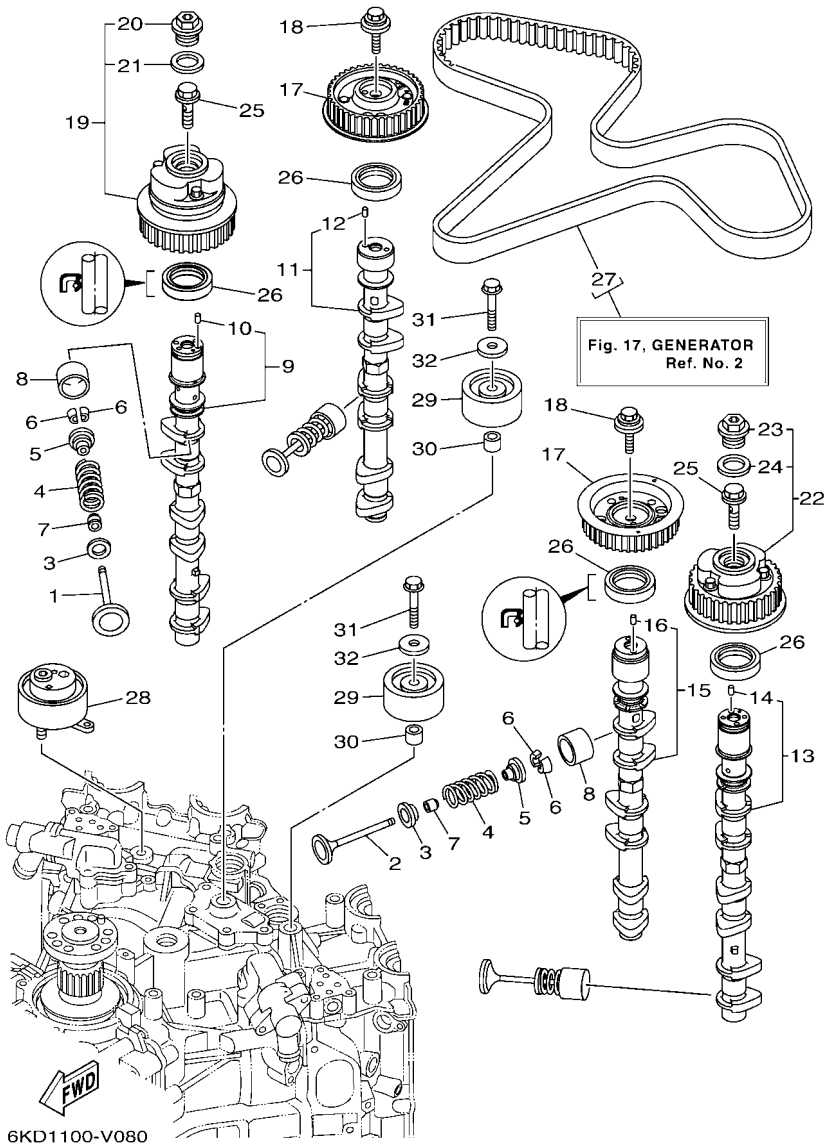

FIG. 8 VALVE SOUPAPE

REF. NO.	PART NO. N° PIECES	DESCRIPTION DESCRIPTION	6JD8	6JE8				REMARKS REMARQUES
8	K0F–A3751–L0	LIFTER, VALVE (3.422) LEVE-SOUPAPE (3.422)	24	24				UR UR
	K0F–A3751–M0	LIFTER, VALVE (3.442) LEVE-SOUPAPE (3.442)	24	24				UR UR
	K0F–A3751–N0	LIFTER, VALVE (3.462) LEVE-SOUPAPE (3.462)	24	24				UR UR
	K0F–A3751–P0	LIFTER, VALVE (3.482) LEVE-SOUPAPE (3.482)	24	24				UR UR
	K0F–A3751–R0	LIFTER, VALVE (3.502) LEVE-SOUPAPE (3.502)	24	24				UR UR
	K0F–A3751–S0	LIFTER, VALVE (3.522) LEVE-SOUPAPE (3.522)	24	24				UR UR
	K0F–A3751–T0	LIFTER, VALVE (3.542) LEVE-SOUPAPE (3.542)	24	24				UR UR
	K0F–A3753–00	LIFTER, VALVE (3.562) LEVE-SOUPAPE (3.562)	24	24				UR UR
	K0F–A3753–10	LIFTER, VALVE (3.582) LEVE-SOUPAPE (3.582)	24	24				UR UR
	K0F–A3753–20	LIFTER, VALVE (3.602) LEVE-SOUPAPE (3.602)	24	24				UR UR
	K0F–A3753–30	LIFTER, VALVE (3.625) LEVE-SOUPAPE (3.625)	24	24				UR UR
	K0F–A3753–40	LIFTER, VALVE (3.650) LEVE-SOUPAPE (3.650)	24	24				UR UR
	K0F–A3753–50	LIFTER, VALVE (3.675) LEVE-SOUPAPE (3.675)	24	24				UR UR
	K0F–A3753–60	LIFTER, VALVE (3.700) LEVE-SOUPAPE (3.700)	24	24				UR UR
	K0F–A3753–70	LIFTER, VALVE (3.725) LEVE-SOUPAPE (3.725)	24	24				UR UR
9	6KA–12171–01	CAMSHAFT 1 ARBRE A CAMES 1	1	1				
10	93605–10108	.PIN, DOWEL .AXE	1	1				
11	6KA–12181–00	CAMSHAFT 2 ARBRE A CAMES 2	1	1				
12	93605–10108	.PIN, DOWEL .AXE	1	1				
13	6KA–12172–01	CAMSHAFT 3 ARBRE A CAMES 3	1	1				
14	93605–10108	.PIN, DOWEL .AXE	1	1				
15	6KA–12182–00	CAMSHAFT 4 ARBRE A CAMES 4	1	1				
16	93605–10108	.PIN, DOWEL .AXE	1	1				
17	6KA–11567–00	GEAR, DRIVEN 2 PIGNON SECONDAIRE 2	2	2				
18	90119–10050	BOLT, WITH WASHER BOULON, AVEC RONDELLE	2	2				
19	6CB–12645–01	PULLEY ASSY 1 POULIE COMPLET 1	1	1				
20	6P2–12623–00	.BOLT .BOULON	1	1				

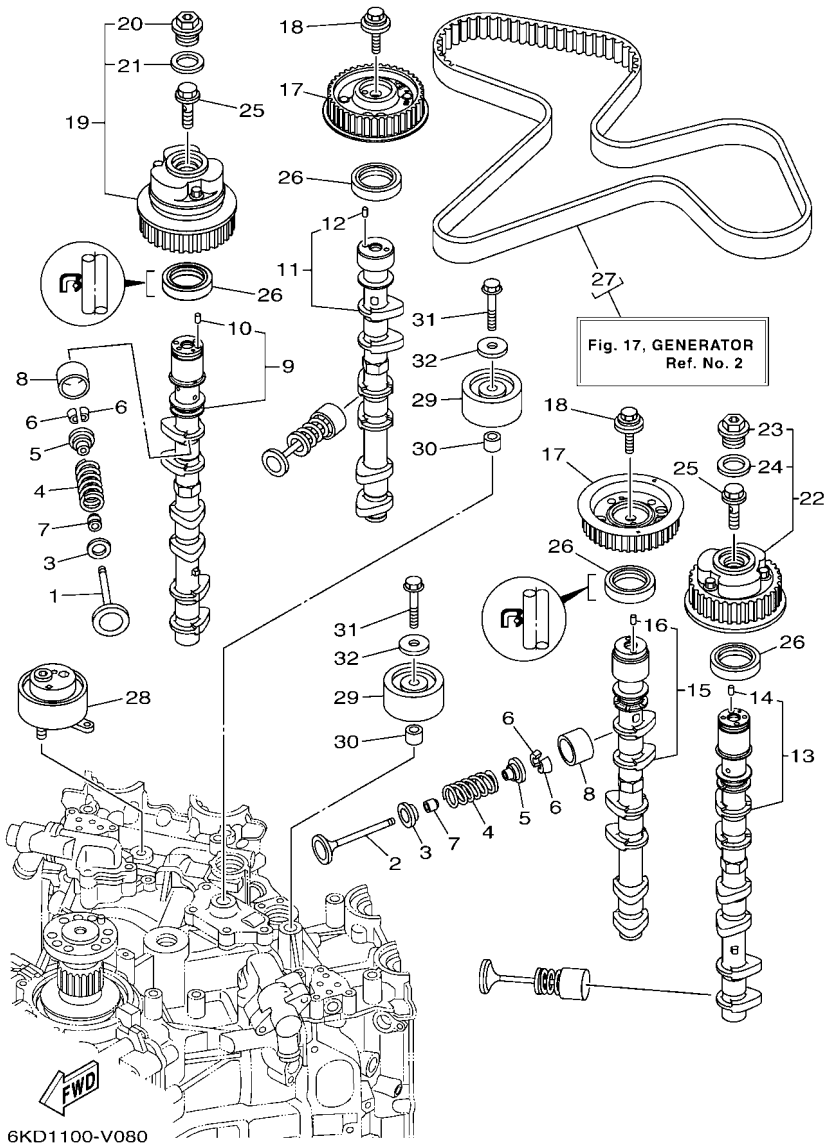

FIG. 8 VALVE SOUPAPE

REF. NO.	PART NO. N° PIECES	DESCRIPTION DESCRIPTION	6JD8	6JE8				REMARKS REMARQUES
21	6P2–12663–00	.GASKET .JOINT	1	1				
22	6CB–1264A–01	PULLEY ASSY 2 POULIE COMPLET 2	1	1				
23	6P2–12623–00	.BOLT .BOULON	1	1				
24	6P2–12663–00	.GASKET .JOINT	1	1				
25	6P2–12615–00	BOLT BOULON	2	2				
26	93102–38008	OIL SEAL JOINT SPY	4	4				
27	6CB–W4624–00	BELT (WITH ROTOR BOLTS) COURROIE (AVEC BOULON)	1	1				
28	6CB–11590–06	TENSIONER ASSY TENDEUR (ENS.)	1	1				
29	6CB–15512–00	GEAR, IDLER 1 PIGNON, INTERMEDIAIRE 1	2	2				
30	99530–14016	PIN, DOWEL GOUJON, D'ASSEMBLAGE	2	2				
31	90119–10M07	BOLT, WITH WASHER BOULON, AVEC RONDELLE	2	2				
32	90201–10M01	WASHER, PLATE RONDELLE, PLATE	2	2				

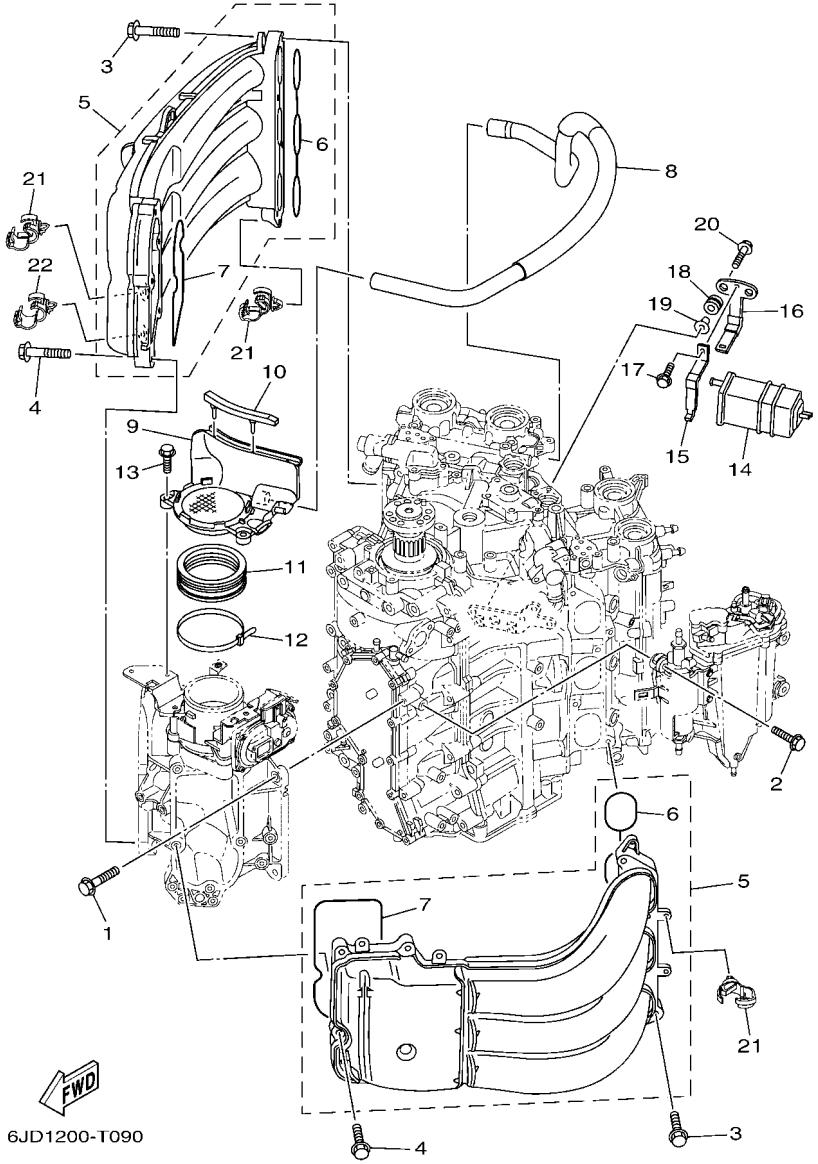

FIG. 9 INTAKE 1 — ADMISSION 1

REF. NO.	PART NO. N° PIECES	DESCRIPTION DESCRIPTION	6JD8	6JE8				REMARKS REMARQUES
1	95D75–08030	BOLT, FLANGE DEEP RECESS BOULON FIXATION	4	4				
2	90119–06299	BOLT, WITH WASHER BOULON, AVEC RONDELLE	4	4				
3	90119–08020	BOLT, WITH WASHER BOULON, AVEC RONDELLE	8	8				
4	90105–06035	BOLT, FLANGE BOULON, A COLLERETTE	10	10				
5	6CE–13641–00	MANIFOLD, INTAKE 1 TUBULURE, ADMISSION 1	2	2				
6	6CB–13645–00	.GASKET, MANIFOLD 1 .JOINT, TUBULURE 1	1	1				
7	6CB–13646–00	.GASKET, MANIFOLD 2 .JOINT, TUBULURE 2	1	1				
8	6CB–15373–01	PIPE, BREATHER DURITE DE RENIFLARD	1	1				
9	6CB–14440–01	SILENCER ASSY, INTAKE SIENCIEUX D'ADMISSION	1	1				
10	6CB–85547–00	DAMPER AMORTISSEUR	1	1				
11	6AW–1441J–01	PIPE, SILENCER DURITE, DE SILENCIEUX	1	1				
12	90464–99004	CLAMP BRIDE	1	1				
13	95D95–06025	BOLT, FLANGE DEEP RECESS BOULON FIXATION	2	2				
14	69J–24170–00	CANISTER ASSY BANDE, RASERVOIR A ESSENCE	1	1				
15	69J–2419A–01	HOLDER SUPPORT	1	1				
16	69J–2134X–00	BRACKET, CANISTER SUPPORT	1	1				
17	97E95–06516	BOLT, HEXAGON W/W DEEP RECESS VIS HEXAGONAL AVC RONDELLE	1	1				
18	90480–10M23	GROMMET PASSE-FIL	2	2				
19	90387–06289	COLLAR COLLERETTE	2	2				
20	90119–06309	BOLT, WITH WASHER BOULON, AVEC RONDELLE	2	2				
21	90464–13249	CLAMP BRIDE	8	8				
22	90464–20181	CLAMP BRIDE	1	1				

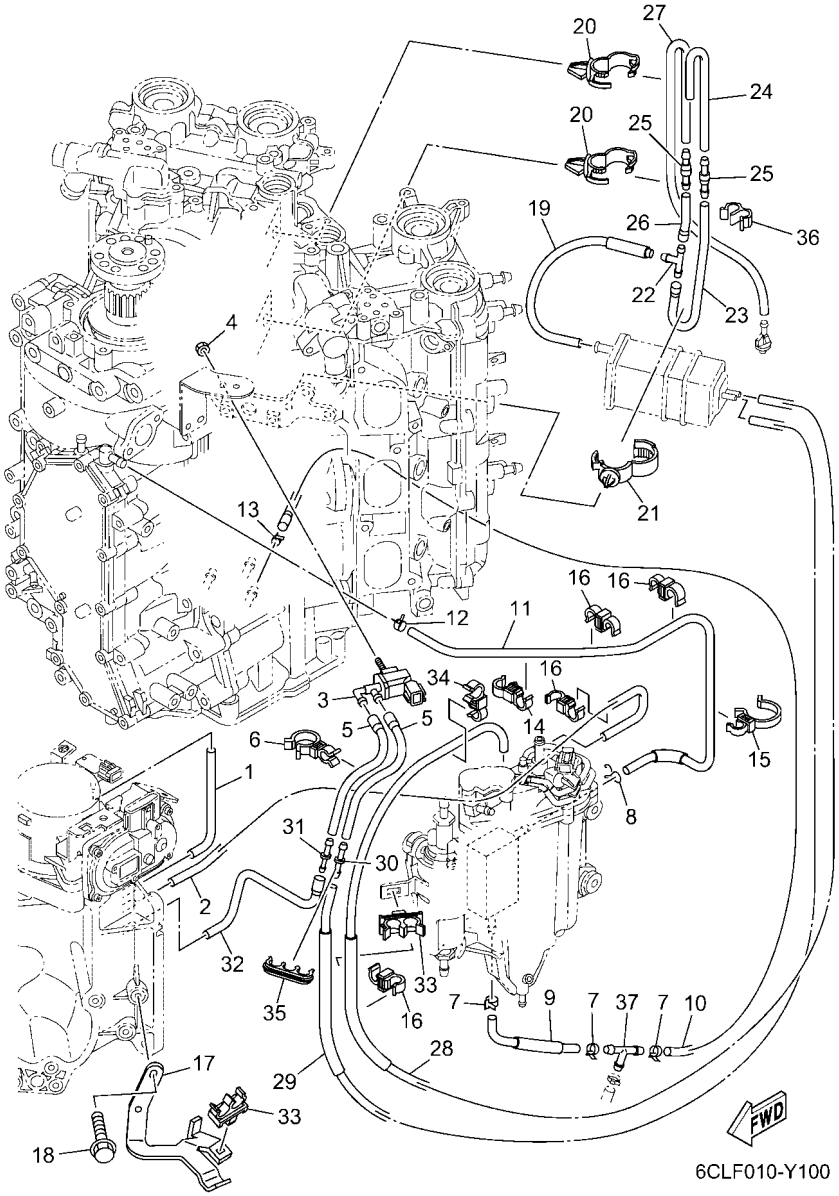

FIG. 10 INTAKE 2 — ADMISSION 2

REF. NO.	PART NO. N° PIECES	DESCRIPTION DESCRIPTION	6JD8	6JE8				REMARKS REMARQUES
1	6CB–13533–00	HOSE, VACUUM SENSING 4 DURITE 4	1	1				
2	6CB–13532–10	HOSE, VACUUM SENSING 3 DURITE 3	1	1				
3	6C5–86120–00	SOLENOID VALVE ASSY SOLENOIDE	1	1				
4	95380–06600	NUT, HEXAGON ECROU	1	1				
5	6CB–2416A–00	HOSE DURITE	2	2				
6	90464–23001	CLAMP BRIDE	2	2				
7	90465–11M10	CLAMP BRIDE	3	3				
8	90467–09M09	CLIP JONC	1	1				
9	6CE–12482–10	PIPE 2 DURITE 2	1	1				
10	90445–097F7	HOSE (L780) DURITE (L780)	1	1				
11	6CB–12484–10	PIPE 4 DURITE 4	1	1				
12	90467–090A0	CLIP JONC	1	1				
13	90465–11M10	CLAMP BRIDE	1	1				
14	90464–12010	CLAMP BRIDE	1	1				
15	90464–26002	CLAMP BRIDE	1	1				
16	90464–09013	CLAMP BRIDE	4	4				
17	6CB–13782–00	STAY SUPPORT	1	1				
18	95D95–06016	BOLT, FLANGE DEEP RECESS BOULON FIXATION	2	2				
19	6CB–13545–00	HOSE 1 DURITE 1	1	1				
20	90464–20181	CLAMP BRIDE	2	2				
21	90464–07209	CLAMP BRIDE	1	1				
22	688–24378–00	PIPE, JOINT 3 DURITE RACCORDEMENT 3	1	1				
23	6CB–13546–01	HOSE 2 DURITE 2	1	1				
24	6CB–13547–00	HOSE 3 DURITE 3	1	1				
25	6E5–21744–00	BREATHER RENIFLARD	2	2				
26	6CB–13548–00	HOSE, AIR 4 DURITE, A AIR 4	1	1				
27	6KA–12483–00	PIPE 3 DURITE 3	1	1				

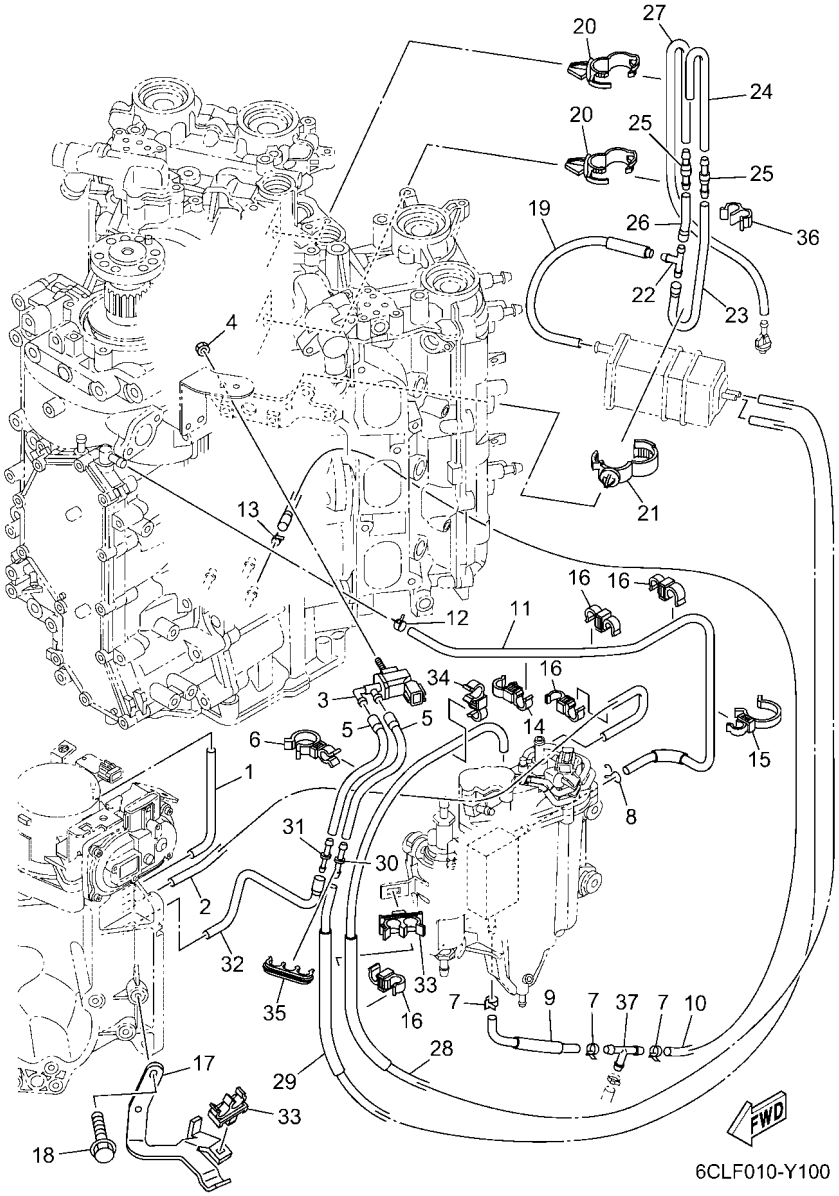

FIG. 10 INTAKE 2 — ADMISSION 2

REF. NO.	PART NO. N° PIECES	DESCRIPTION DESCRIPTION	6JD8	6JE8				REMARKS REMARQUES
28	6CB–1475A–00	PIPE 1 DURITE 1	1	1				
29	6CB–1475F–00	PIPE 3 DURITE 3	1	1				
30	6G8–24376–00	PIPE, JOINT 1 DURITE 1, RACCORDEMENT	1	1				
31	6EK–14989–00	ORIFICE, AIR VENT OR1F1CE	1	1				
32	6CB–1475G–10	PIPE 4 DURITE 4	1	1				
33	90464–11012	CLAMP BRIDE	2	2				
34	90464–12010	CLAMP BRIDE	1	1				
35	90464–10011	CLAMP BRIDE	1	1				
36	90464–07M20	CLAMP BRIDE	1	1				
37	688–24378–00	PIPE, JOINT 3 DURITE RACCORDEMENT 3	1	1				

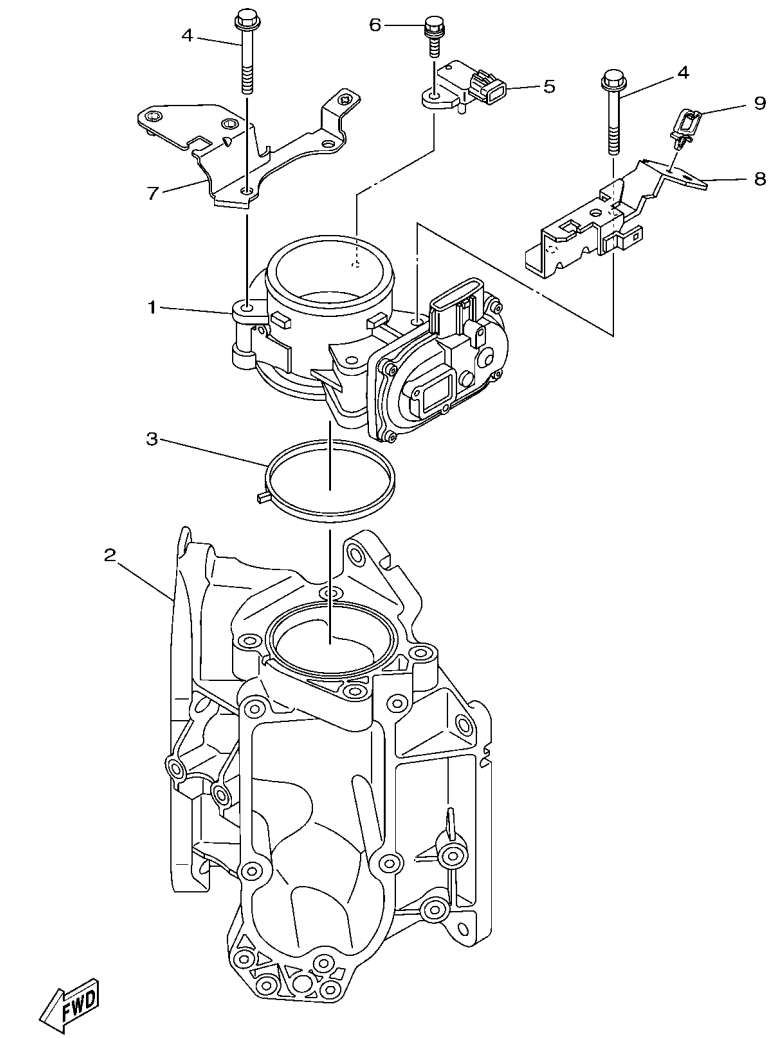

6KA1100-V120

FIG. 11 THROTTLE BODY ASSY 1 — CARTER D'ACCELERATEUR 1

REF. NO.	PART NO. N° PIECES	DESCRIPTION DESCRIPTION	6JD8	6JE8				REMARKS REMARQUES
1	6CB–13751–12	BODY, THROTTLE 1 CARTER 1	1	1				
2	6CB–13711–00	MIXING BODY CHAMBRE DE MELANGE	1	1				
3	6CB–13556–00	GASKET, MANIFOLD JOINT, TUBULURE	1	1				
4	95D75–08060	BOLT, FLANGE DEEP RECESS BOULON FIXATION	4	4				
5	6P2–82380–00	SENSOR, PRESSURE SONDE DE PRESSION	1	1				
6	97E75–06620	BOLT, HEXAGON W/W DEEP RECESS VIS HEXAGONAL AVC RONDELLE	1	1				
7	6KA–13898–00	HOLDER SUPPORT	1	1				
8	6CB–13898–11	HOLDER SUPPORT	1	1				
9	90464–08004	CLAMP BRIDE	1	1				

FIG. 12 THROTTLE BODY ASSY 2 — CARTER D'ACCELERATEUR 2

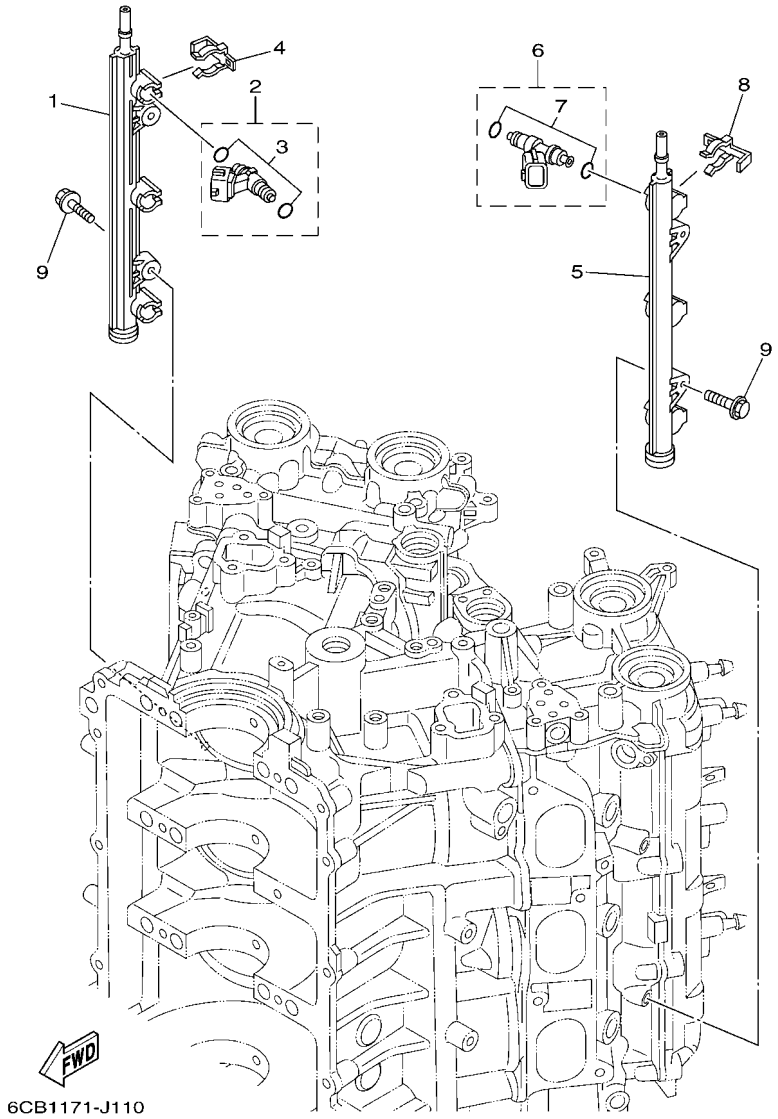

REF. NO.	PART NO. N° PIECES	DESCRIPTION DESCRIPTION	6JD8	6JE8				REMARKS REMARQUES
1	6CB–13161–11	PIPE, DELIVERY 1 DURITE REFOULEMENT 1	1	1				
2	6AW–13761–01	INJECTOR INJECTEUR	3	3				
3	6AW–1410B–00	.PACKING KIT .POCHETTE DE JOINTS	1	1				
4	6CB–13577–00	CLIP AGRAFE	3	3				
5	6CB–13171–11	PIPE, DELIVERY 2 DURITE REFOULEMENT	1	1				
6	6AW–13761–01	INJECTOR INJECTEUR	3	3				
7	6AW–1410B–00	.PACKING KIT .POCHETTE DE JOINTS	1	1				
8	6CB–13577–00	CLIP AGRAFE	3	3				
9	90119–06047	BOLT, WITH WASHER BOULON, AVEC RONDELLE	4	4				

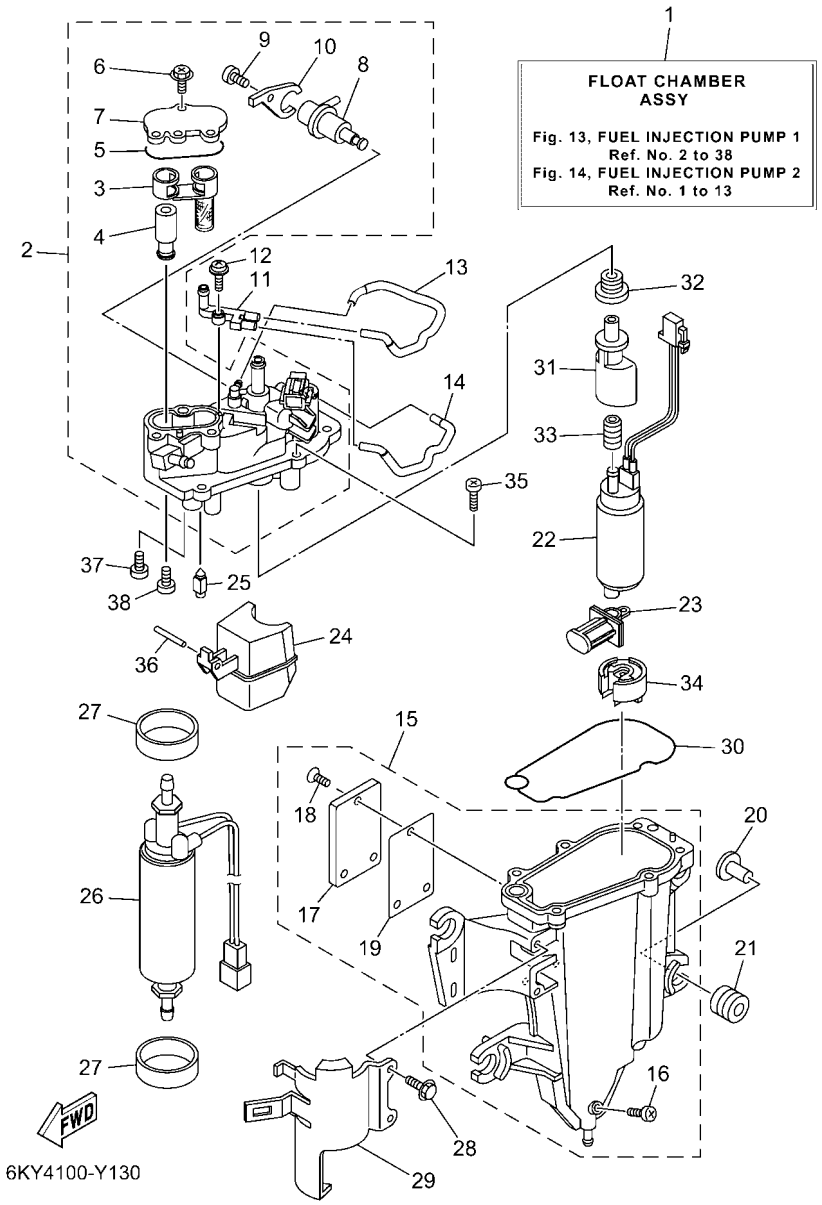

FIG. 13 FUEL INJECTION PUMP 1 POMPE A INJECTEUR 1

REF. NO.	PART NO. N° PIECES	DESCRIPTION DESCRIPTION	6JD8	6JE8				REMARKS REMARQUES
1	6CB–14180–17	FLOAT CHAMBER ASSY CUVE DE FLOTTEUR	1	1				
2	6CB–14182–02	COVER, FLOAT CHAMBER COUVERCLE, CUVE DE FLOTTEUR	1	1				
3	6CB–24501–01	.FILTER, FUEL .FILTRE	1	1				
4	6CB–24460–00	.RELIEF VALVE ASSY .SOUPAPE DE SECURITE COMPLET	1	1				
5	6CB–13016–00	.O-RING .JOINT TORIQUE	1	1				
6	6CB–14216–00	.SCREW .VIS	3	3				
7	6CB–24217–00	.COVER .COUVERCLE	1	1				
8	6CB–13906–01	.REGULATOR, PRESSURE .REGULATEUR DE PRESSION	1	1				
9	6CB–14564–00	.SCREW .VIS	1	1				
10	6CB–14146–00	.PLATE .PLAQUE	1	1				
11	68V–24379–10	PIPE, JOINT 4 DURITE RACCORDEMENT 4	1	1				
12	68V–14216–00	SCREW VIS	1	1				
13	6CB–1475H–00	PIPE 5 DURITE 5	1	1				
14	6CB–1475J–00	PIPE 6 DURITE 6	1	1				
15	6ML–14181–00	BODY, FLOAT CHAMBER 1 CORPS, CUVE DE FLOTTEUR 1	1	1				
16	6P2–14191–00	.PLUG, DRAIN .PLOT, VIDANGE	1	1				
17	6EK–24452–00	.COVER .COUVERCLE	1	1				
18	6K8–14591–10	.SCREW .VIS	3	3				
19	6CB–24482–00	.GASKET 1 .JOINT 1	1	1				
20	63P–13716–00	COLLAR COLLERETTE	4	4				
21	6CB–13593–00	DAMPER AMORTISSEUR	4	4				
22	6CB–13907–12	FUEL PUMP COMP. POMPE A CARBURANT COMP.	1	1				
23	63P–13915–00	FILTER FILTRE	1	1				
24	6CB–14985–00	FLOAT FLOTTEUR	1	1				
25	6CB–14546–00	VALVE, NEEDLE POINTEAU	1	1				
26	6GR–24410–02	FUEL PUMP ASSY POMPE A ESSENCE	1	1				
27	6CB–24492–00	BUSH, FUEL PUMP BAGUE	2	2				

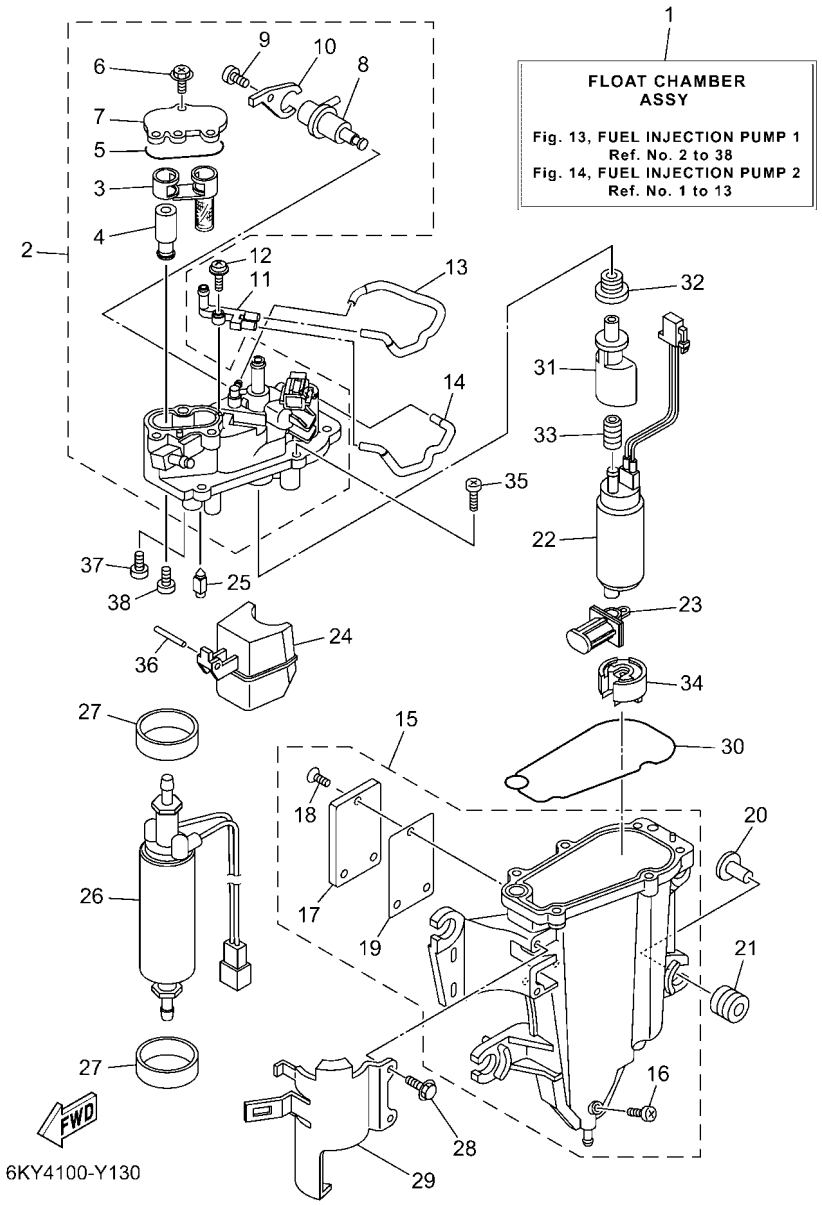

FIG. 13 FUEL INJECTION PUMP 1 — POMPE A INJECTEUR 1

REF. NO.	PART NO. N° PIECES	DESCRIPTION DESCRIPTION	6JD8	6JE8				REMARKS REMARQUES
28	6CB–24592–00	BOLT BOLTE	2	2				
29	6CB–24491–00	BRACKET, FUEL PUMP SUPPORT, POMPE A ESSENCE	1	1				
30	6CB–14984–00	GASKET, FLOAT CHAMBER JOINT, CUVE DE FLOTTEUR	1	1				
31	6KA–13132–00	JOINT RACCORD	1	1				
32	6LH–1447B–00	BUSH 1 DOUILLE 1	1	1				
33	6AW–13781–00	DAMPER, PUMP AMORTISSEUR, POMPE	1	1				
34	6AW–13784–00	COVER, PUMP COUVERCLE, POMPE	1	1				
35	63P–14567–00	SCREW VIS	6	6				
36	6P2–14386–00	PIN, FLOAT AXE, FLOTTEUR	1	1				
37	4SV–24453–00	SCREW VIS	1	1				
38	98507–04008	SCREW, PAN HEAD VIS, TETE TRONCONIQUE	1	1				

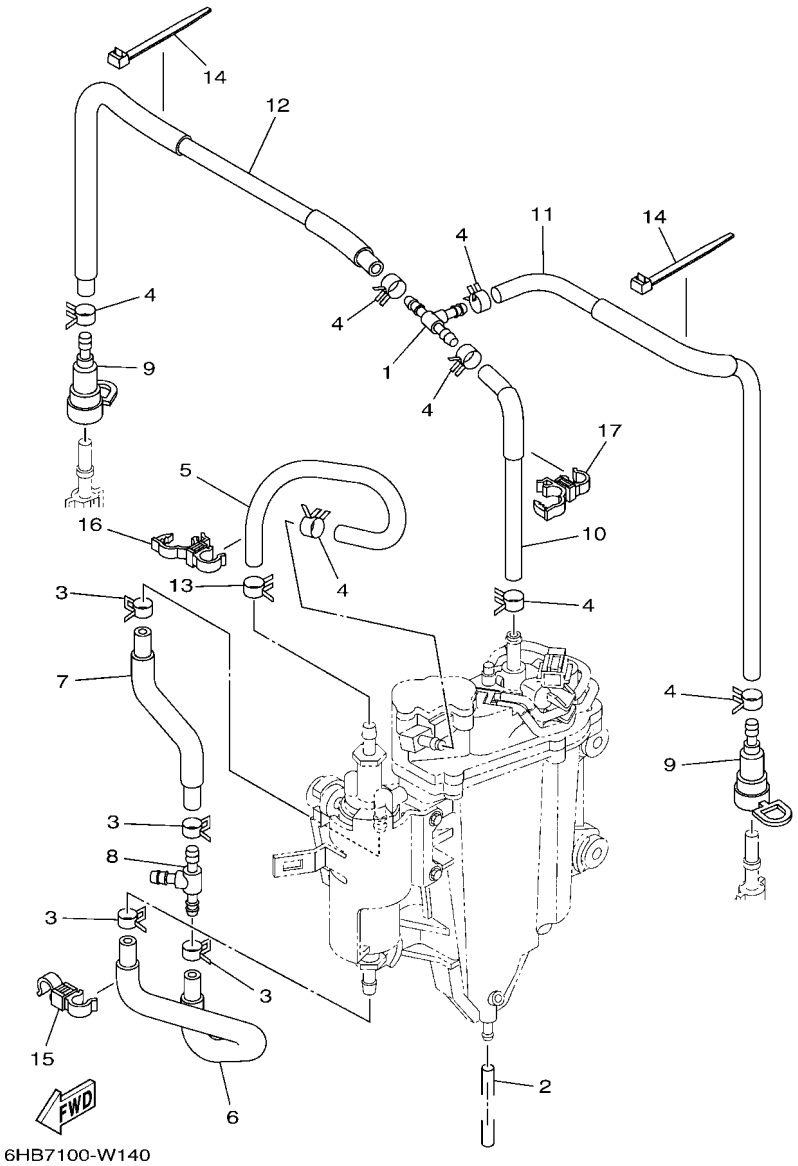

FIG. 14 FUEL INJECTION PUMP 2 — POMPE A INJECTEUR 2

REF. NO.	PART NO. N° PIECES	DESCRIPTION DESCRIPTION	6JD8	6JE8				REMARKS REMARQUES
1	6CB–24461–00	PIPE, JOINT DURITE, RACCORDEMENT	1	1				
2	6P2–14149–00	PIPE DURITE	1	1				
3	90467–141A2	CLIP JONC	4	4				
4	68V–13577–01	CLIP AGRAFE	7	7				
5	6CB–24324–00	PIPE 13 DURITE 13	1	1				
6	6CB–24317–00	PIPE 7 DURITE 7	1	1				
7	6CB–24323–00	PIPE 12 DURITE 12	1	1				
8	6E5–24378–00	PIPE, JOINT 3 DURITE, RACCORDEMENT 3	1	1				
9	60E–24300–01	FUEL PIPE JOINT DURITE RACCORDEMT. A ESSENCE	2	2				
10	6CB–13971–01	PIPE, FUEL 1 TUBE 1, CARBURANT	1	1				
11	6CB–13974–01	PIPE, FUEL 4 TUBE 4, CARBURANT	1	1				
12	6CB–13972–00	PIPE, FUEL 2 TUBE 2, CARBURANT	1	1				
13	90467–140A9	CLIP JONC	1	1				
14	90465–14M66	CLAMP BRIDE	2	2				
15	90464–12009	CLAMP BRIDE	1	1				
16	90464–12012	CLAMP BRIDE	1	1				
17	90464–12012	CLAMP BRIDE	1	1				

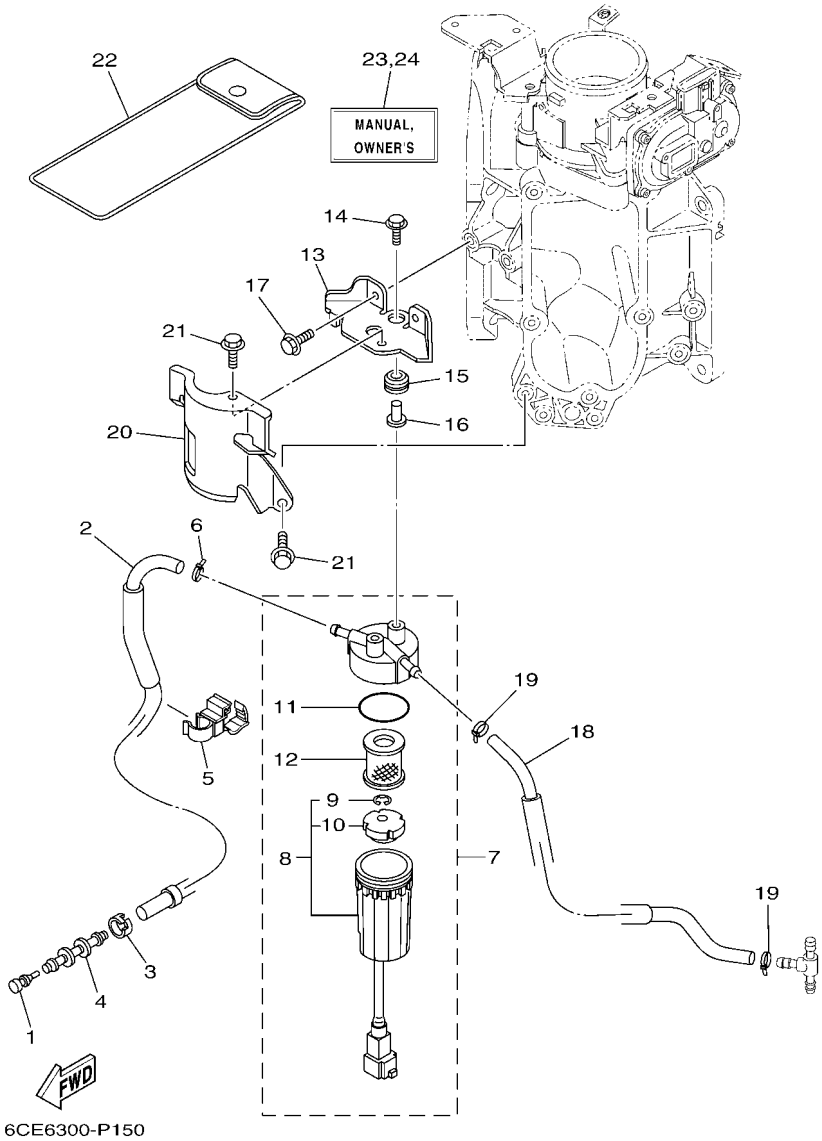

FIG. 15 FUEL 1 — CARBURANT 1

REF. NO.	PART NO. N° PIECES	DESCRIPTION DESCRIPTION	6JD8	6JE8				REMARKS REMARQUES
1	689–85547–01	DAMPER AMORTISSEUR	1	1				
2	6CB–24314–01	PIPE 4 DURITE 4	1	1				
3	6E5–24351–51	BAND 1 COLLIER 1	1	1				
4	6AW–24377–01	PIPE, JOINT 2 DURITE RACCORDEMENT 2	1	1				
5	90464–12012	CLAMP BRIDE	1	1				
6	90465–11M10	CLAMP BRIDE	1	1				
7	6P3–24560–23	FILTER ASSY ENS FILTRE	1	1				
8	6P3–WS24B–21	.CUP, FILTER (WITH TAG) .CUVETTE, FILTRE (AVEC TAG)	1	1				
9	6P3–24519–00	..CLIP ..JONC	1	1				
10	6P3–24469–00	..FLOAT, WATER LEVEL ..FLOTTEUR	1	1				
11	6P3–24564–00	.GASKET .JOINT	1	1				
12	6P3–24563–02	.ELEMENT, FILTER .ELEMENT, FILTRE	1	1				
13	6CB–24566–00	BRACKET, FILTER SUPPORT, FILTRE	1	1				
14	90119–06309	BOLT, WITH WASHER BOULON, AVEC RONDELLE	2	2				
15	90480–10M23	GROMMET PASSE-FIL	2	2				
16	90387–06289	COLLAR COLLERETTE	2	2				
17	95D95–06016	BOLT, FLANGE DEEP RECESS BOULON FIXATION	2	2				
18	6CB–24313–00	PIPE 3 DURITE 3	1	1				
19	90465–11M10	CLAMP BRIDE	2	2				
20	6CB–24596–01	COVER COUVERCLE	1	1				
21	95D95–06014	BOLT, FLANGE DEEP RECESS BOULON FIXATION	2	2				
22	67F–28100–12	TOOL KIT TROUSSE A OUTILS	1	1				AP AP
23	6JD–28199–76–E0	MANUAL,OWNER'S MANUEL D'UTILISATION	1	1				UR (E) UR (E)
	6JD–28199–76–F0	MANUAL,OWNER'S MANUEL D'UTILISATION	1	1				UR (F) UR (F)
	6JD–28199–76–S0	MANUAL,OWNER'S MANUEL D'UTILISATION	1	1				UR (ES) UR (ES)
	6JD–28199–76–G0	MANUAL,OWNER'S MANUEL D'UTILISATION	1	1				UR (D) UR (D)
	6JD–28199–76–D0	MANUAL,OWNER'S MANUEL D'UTILISATION	1	1				UR (NL) UR (NL)

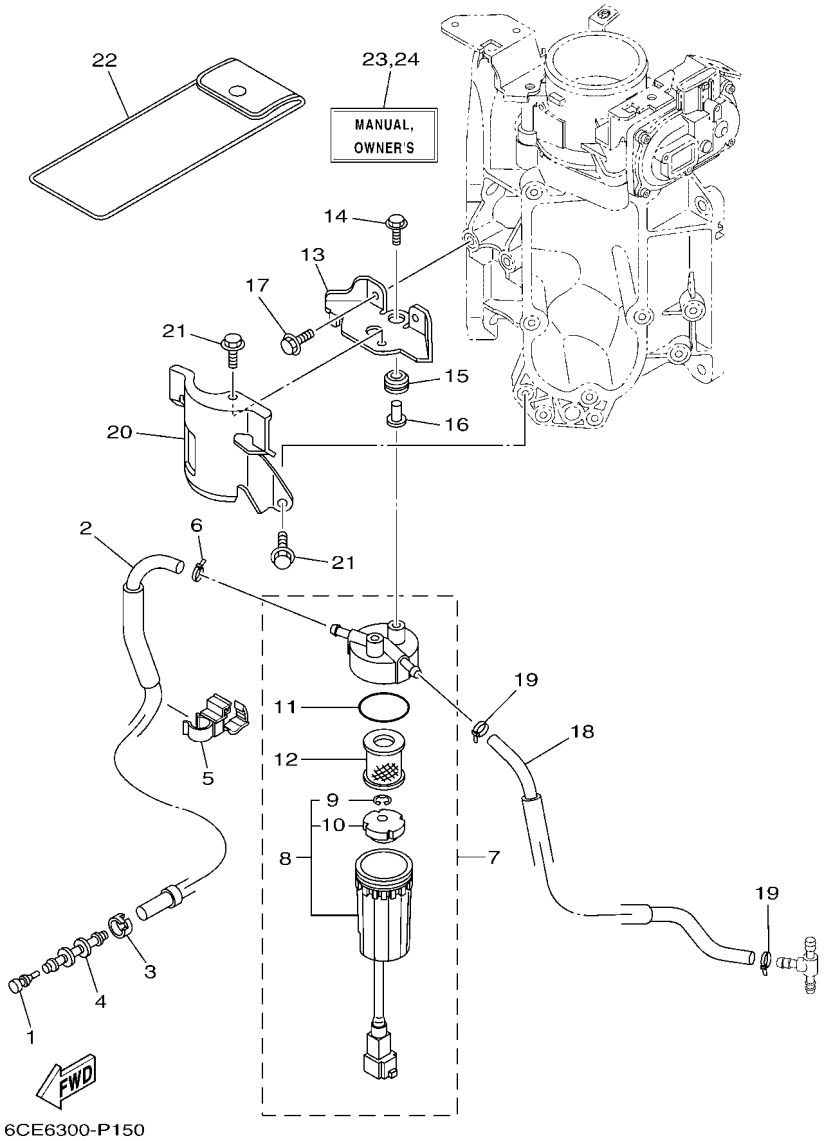

FIG. 15 FUEL 1 — CARBURANT 1

REF. NO.	PART NO. N° PIECES	DESCRIPTION DESCRIPTION	6JD8	6JE8				REMARKS REMARQUES
23	6JD–28199–76–H0	MANUAL,OWNER'S MANUEL D'UTILISATION	1	1				UR (I) UR (I)
24	6JD–28199–86–K0	MANUAL,OWNER'S MANUEL D'UTILISATION	1	1				UR (DK) UR (DK)
	6JD–28199–86–R0	MANUAL,OWNER'S MANUEL D'UTILISATION	1	1				UR (GR) UR (GR)
	6JD–28199–86–P0	MANUAL,OWNER'S MANUEL D'UTILISATION	1	1				UR (P) UR (P)
	6JD–28199–86–N0	MANUAL,OWNER'S MANUEL D'UTILISATION	1	1				UR (N) UR (N)
	6JD–28199–86–M0	MANUAL,OWNER'S MANUEL D'UTILISATION	1	1				UR (S) UR (S)
	6JD–28199–86–L0	MANUAL,OWNER'S MANUEL D'UTILISATION	1	1				UR (SF) UR (SF)

FIG. 16 FUEL 2 — CARBURANT 2

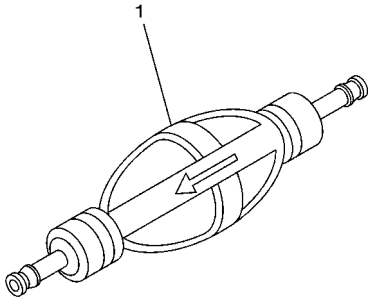

68V9110-J110

REF. NO.	PART NO. N° PIECES	DESCRIPTION DESCRIPTION	6JD8	6JE8				REMARKS REMARQUES
1	6AW–24360–02	PRIMER PUMP ASSY POMPE D'AMORCAGE	1	1				AP AP

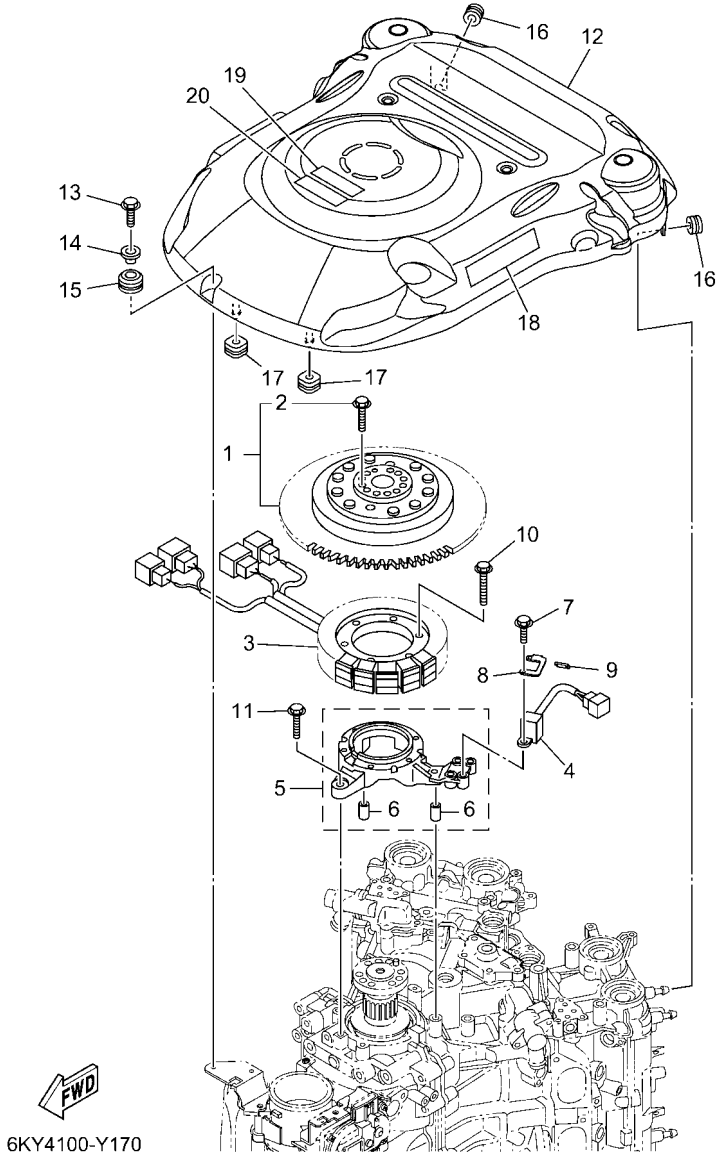

6KY4100-Y170

FIG. 17 GENERATOR — GENERATRICE

REF. NO.	PART NO. N° PIECES	DESCRIPTION DESCRIPTION	6JD8	6JE8				REMARKS REMARQUES
1	6CE–W8145–01	ROTOR ASSY WITH BOLTS ROTOR COMPLET AVEC BOULON	1	1				
2	6EK–W9010–00	.BOLT SET .BOULON ENS.	1	1				
3	6CE–81410–00	STATOR ASSY STATOR COMPLET	1	1				
4	6CB–85580–01	COIL, PULSER BOBINE, PULSEUR	1	1				
5	6CB–85561–00	BASE, MAGNETO BASE, MAGNETO	1	1				
6	99530–08012	.PIN, DOWEL .GOUJON, D'ASSEMBLAGE	2	2				
7	97595–05520	BOLT, WITH WASHER VIS HEXAGONAL AVC RONDELLE	2	2				
8	6ML–85592–00	STAY, PULSER SUPPORT, PULSATION BOBINE	1	1				
9	90465–11M10	CLAMP BRIDE	1	1				
10	95022–06035	BOLT, FLANGE BOULON, A COLLERETTE	6	6				
11	95D95–06030	BOLT, FLANGE DEEP RECESS BOULON FIXATION	4	4				
12	6CE–81337–01	COVER, FLYWHEEL COUVERCLE, VOLANT	1	1				
13	95D95–06025	BOLT, FLANGE DEEP RECESS BOULON FIXATION	1	1				
14	90387–06285	COLLAR COLLERETTE	1	1				
15	90480–15M31	GROMMET PASSE-FIL	1	1				
16	90480–12314	GROMMET PASSE-FIL	2	2				
17	6CB–85516–01	SPACER ENTRETOISE	2	2				
18	6CE–13437–61	MARK, CAUTION MAKER	1	1				
19	6EE–81994–41	LABEL, SAFETY ETIQUETTE, SECURITE	1	1				
20	6EE–81994–51	LABEL, SAFETY ETIQUETTE, SECURITE	1	1				

FIG. 18 ELECTRICAL 1 — PARTIE ELECTRIQUE 1

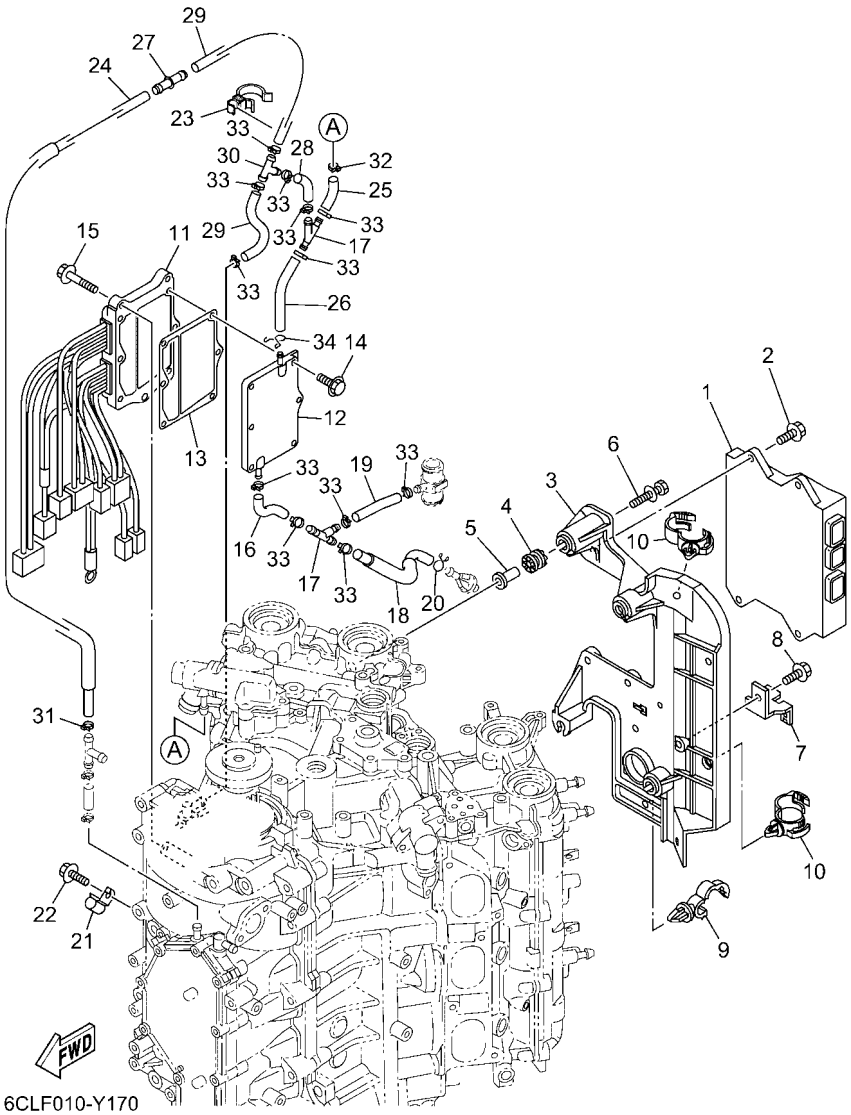

REF. NO.	PART NO. N° PIECES	DESCRIPTION DESCRIPTION	6JD8	6JE8				REMARKS REMARQUES
1	6JD–8591A–01	ENGINE CONTROL UNIT ASSY BLOC DE CONTROL	1	1				
2	95D95–06020	BOLT, FLANGE DEEP RECESS BOULON FIXATION	4	4				
3	6CB–82316–01	BRACKET, IGNITION COIL SUPPORT, BOBINE D'ALLUMAGE	1	1				
4	64J–85516–01	SPACER ENTRETOISE	4	4				
5	69M–42758–01	COLLAR ENTRETOISE	4	4				
6	90119–06293	BOLT, WITH WASHER BOULON, AVEC RONDELLE	4	4				
7	6BR–81845–00	PLATE PLAQUE	1	1				
8	95D95–06012	BOLT, FLANGE DEEP RECESS BOULON FIXATION	1	1				
9	90464–13249	CLAMP BRIDE	1	1				
10	90464–20181	CLAMP BRIDE	2	2				
11	6CE–81960–10	RECTIFIER & REGULATOR ASSY REDRESSEUR REGULATEUR CPLT	1	1				
12	6CE–81972–00–9S	COVER, RECTIFIER COUVERCLE, REDRESSEUR	1	1				
13	6CE–81975–00	PLATE, RECTIFIER FITTING PLAQUE, FIXATION DU REDRESSEUR	1	1				
14	90119–06MA3	BOLT, WITH WASHER BOULON, AVEC RONDELLE	6	6				
15	95D95–06025	BOLT, FLANGE DEEP RECESS BOULON FIXATION	3	3				
16	6CE–1248A–00	PIPE 8 DURITE 8	1	1				
17	6CE–24377–00	PIPE, JOINT 2 DURITE RACCORDEMENT 2	2	2				
18	6CE–12483–00	PIPE 3 DURITE 3	1	1				
19	90445–107A5	HOSE (L30) DURITE (L30)	1	1				
20	90467–08M18	CLIP JONC	1	1				
21	90462–06013	CLAMP BRIDE	1	1				
22	95023–06012	BOLT BOULON, A COLLERETTE	1	1				
23	90464–26002	CLAMP BRIDE	1	1				
24	6CE–12481–10	PIPE 1 DURITE 1	1	1				
25	6CE–14872–00	PIPE 2 DURITE 2	1	1				
26	6CE–12485–00	PIPE 5 DURITE 5	1	1				
27	6CE–24376–01	PIPE, JOINT 1 DURITE 1, RACCORDEMENT	1	1				

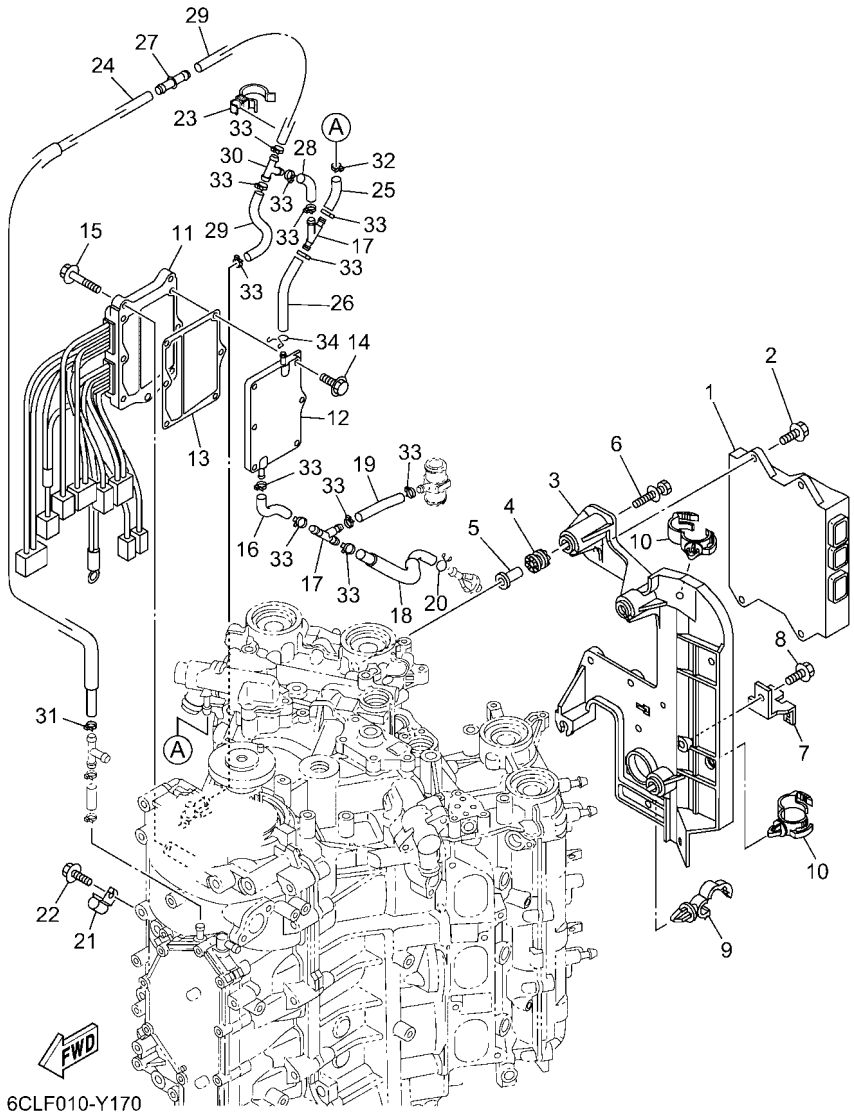

FIG. 18 ELECTRICAL 1 — PARTIE ELECTRIQUE 1

REF. NO.	PART NO. N° PIECES	DESCRIPTION DESCRIPTION	6JD8	6JE8				REMARKS REMARQUES
28	6CE–14872–00	PIPE 2 DURITE 2	1	1				
29	90445–09068	HOSE (L110) DURITE (L110)	2	2				
30	688–24378–00	PIPE, JOINT 3 DURITE RACCORDEMENT 3	1	1				
31	90465–11M10	CLAMP BRIDE	1	1				
32	90465–11M10	CLAMP BRIDE	1	1				
33	90465–11M10	CLAMP BRIDE	12	12				
34	90467–08M18	CLIP JONC	1	1				

FIG. 19 ELECTRICAL 2 — PARTIE ELECTRIQUE 2

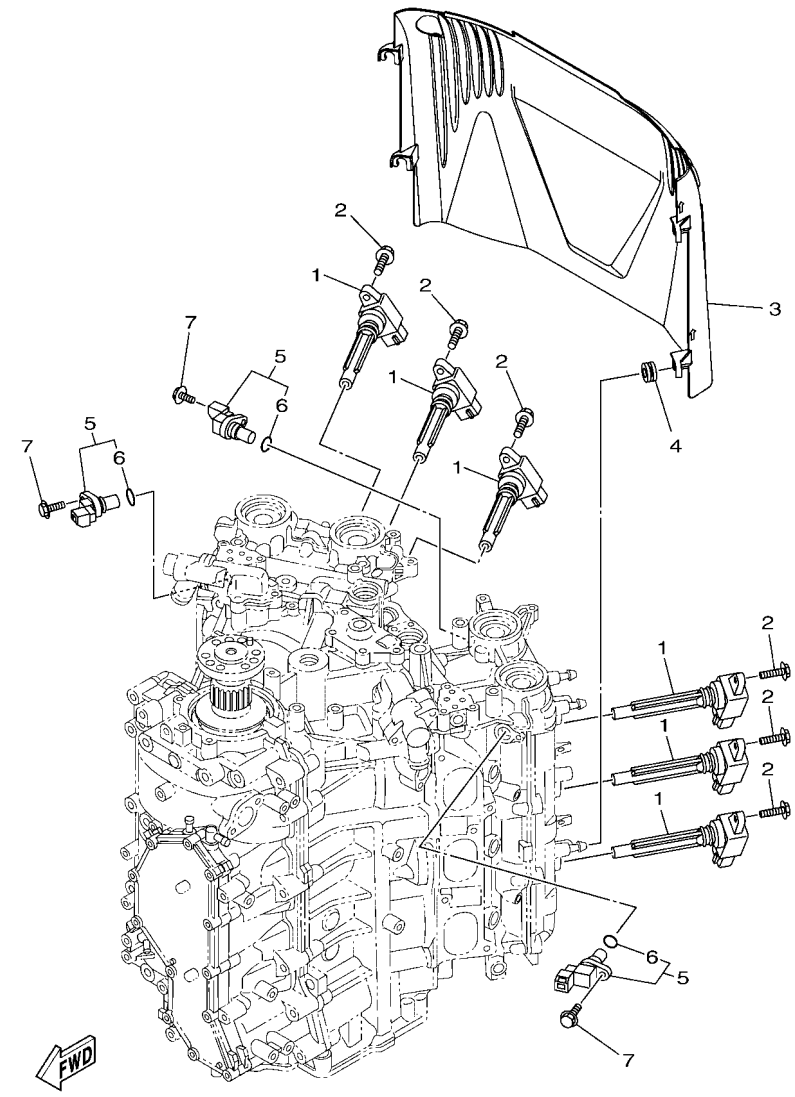

6CE8100-R190

REF. NO.	PART NO. N° PIECES	DESCRIPTION DESCRIPTION	6JD8	6JE8				REMARKS REMARQUES
1	6CB–82310–02	IGNITION COIL ASSY BOBINE D'ALLUMAGE	6	6				
2	95D95–06025	BOLT, FLANGE DEEP RECESS BOULON FIXATION	6	6				
3	6CB–82314–00	COVER, IGNITION COIL COUVERCLE, BOBINE D'ALLUMAGE	1	1				
4	90480–12314	GROMMET PASSE-FIL	4	4				
5	6P2–85896–00	SENSOR, CAM POSITION SONDE DE CAME	3	3				
6	6P2–85075–00	.O-RING .JOINT TORIQUE	1	1				
7	97E95–06520	BOLT, HEXAGON W/W DEEP RECESS VIS HEXAGONAL AVC RONDELLE	3	3				

FIG. 20 ELECTRICAL 3 — PARTIE ELECTRIQUE 3

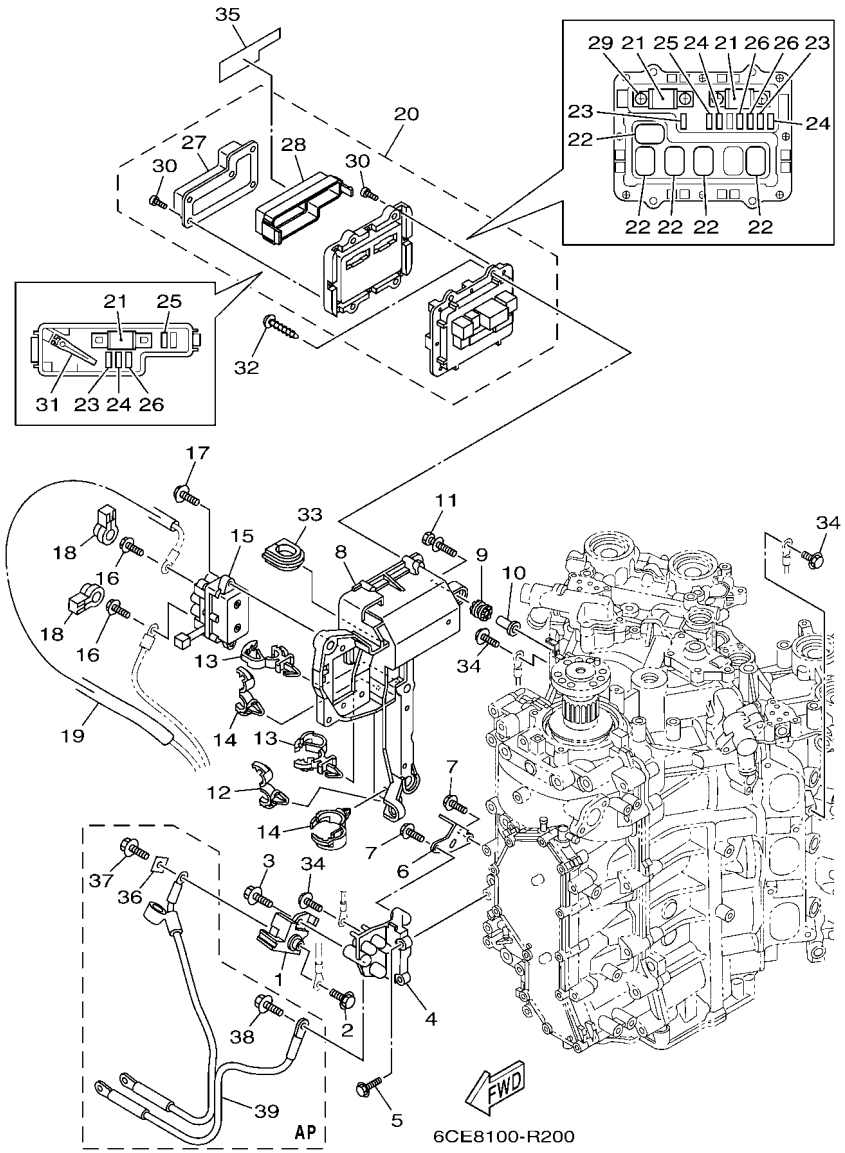

REF. NO.	PART NO. N° PIECES	DESCRIPTION DESCRIPTION	6JD8	6JE8				REMARKS REMARQUES
1	6P2–81925–01	TERMINAL BORNE	1	1				
2	95D95–08016	BOLT, FLANGE DEEP RECESS BOULON FIXATION	1	1				
3	95814–08020	BOLT, FLANGE BOULON, A COLLERETTE	1	1				
4	6CB–81929–00	BRACKET, TERMINAL SUPPORT	1	1				
5	95D95–06020	BOLT, FLANGE DEEP RECESS BOULON FIXATION	2	2				
6	6CE–82588–00	PLATE PLAQUE	1	1				
7	95D95–06016	BOLT, FLANGE DEEP RECESS BOULON FIXATION	2	2				
8	6CB–81948–02	BRACKET SUPPORT	1	1				
9	64J–85516–01	SPACER ENTRETOISE	5	5				
10	69M–42758–01	COLLAR ENTRETOISE	5	5				
11	90119–06293	BOLT, WITH WASHER BOULON, AVEC RONDELLE	5	5				
12	90464–13249	CLAMP BRIDE	1	1				
13	90464–12183	CLAMP BRIDE	2	2				
14	90464–20181	CLAMP BRIDE	2	2				
15	6AW–W8195–10	RELAY ASSY RELAIS COMPLET	1	1				
16	97E95–06610	BOLT, HEXAGON W/W DEEP RECESS VIS HEXAGONAL AVC RONDELLE	2	2				
17	97513–06520	BOLT, WITH WASHER VIS HEXAGONAL AVC RONDELLE	2	2				
18	6P2–8183X–00	CAP, TERMINAL COUVERCLE, BORNE	2	2				
19	90446–15006	HOSE (L150) DURITE (L150)	1	1				
20	6CE–82170–11	FUSE BOX ASSY BOITE A FUSIBLES	1	1				
21	6CE–82151–00	.FUSE (100A) .FUSIBLE (100A)	3	3				
22	6AW–8195A–00	.RELAY ASSY .RELAIS COMPLET	5	5				
23	67F–82151–40	.FUSE (10A) .FUSIBLE (10A)	3	3				
24	67F–82151–50	.FUSE (15A) .FUSIBLE (15A)	3	3				
25	67F–82151–00	.FUSE (20A) .FUSIBLE (20A)	2	2				
26	67F–82151–10	.FUSE (30A) .FUSIBLE (30A)	3	3				
27	6CB–81639–10	.COVER .COUVERCLE	1	1				

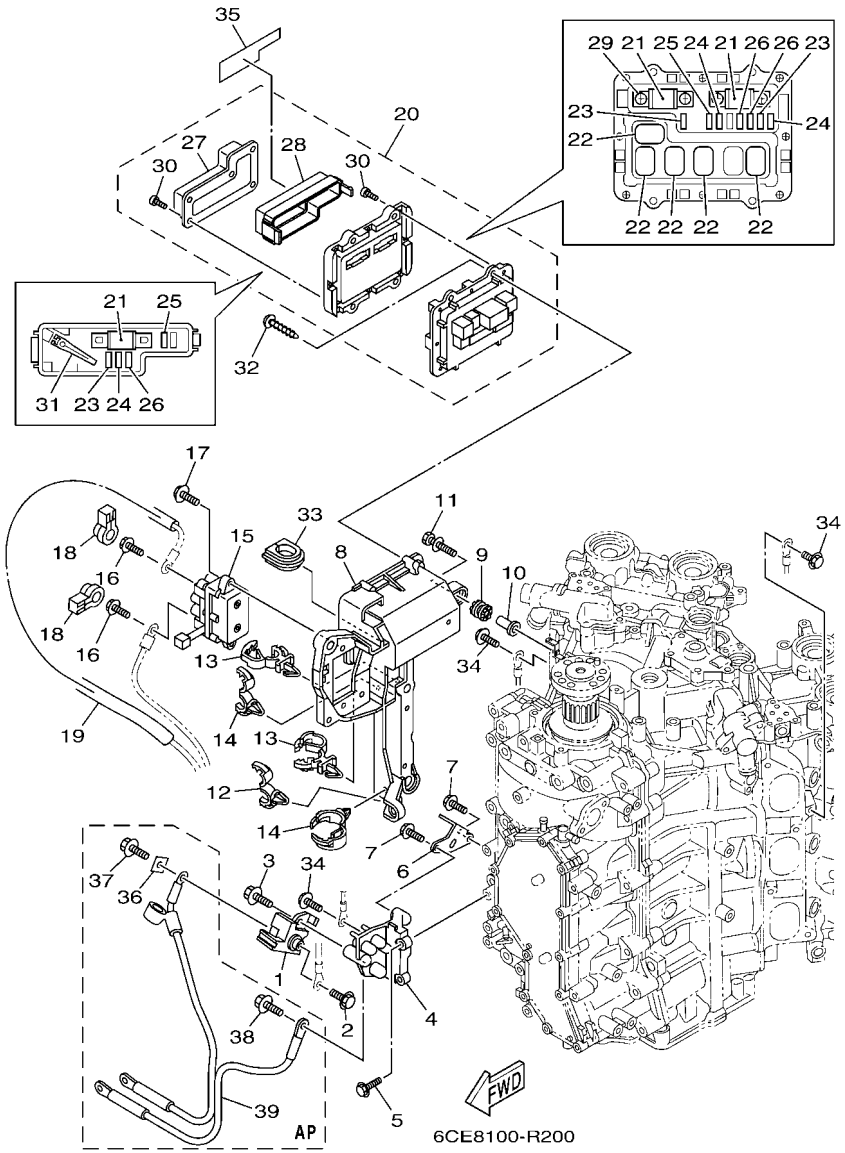

FIG. 20 ELECTRICAL 3 — PARTIE ELECTRIQUE 3

REF. NO.	PART NO. N° PIECES	DESCRIPTION DESCRIPTION	6JD8	6JE8				REMARKS REMARQUES
28	6CB–85544–00	.CASE .BOITIER	1	1				
29	68F–82846–00	.SCREW, PAN HEAD (M5) .VIS, TETE TRONCONIQUE (M5)	4	4				
30	6P2–82113–00	.SCREW (M3) .VIS (M3)	13	13				
31	67F–2812A–00	.PULLER, FUSE .TENDEUR, FUSIBLE	1	1				
32	97780–50620	SCREW, TAPPING VIS, TETE BOMBEE	4	4				
33	6P2–81336–01	GROMMET OEILLET CAOUTCHOUC	1	1				
34	97E95–06516	BOLT, HEXAGON W/W DEEP RECESS VIS HEXAGONAL AVC RONDELLE	5	5				
35	6CE–81919–21	GRAPHIC, REGULATOR ADHESIF, REGULATEUR	1	1				
36	6CB–81923–00	WASHER RONDELLE	1	1				AP AP
37	95D95–08016	BOLT, FLANGE DEEP RECESS BOULON FIXATION	1	1				AP AP
38	95D95–08016	BOLT, FLANGE DEEP RECESS BOULON FIXATION	1	1				AP AP
39	6CB–82105–03	BATTERY CABLE CABLE DE BATTERIE	1	1				AP AP

FIG. 21 ELECTRICAL 4 — PARTIE ELECTRIQUE 4

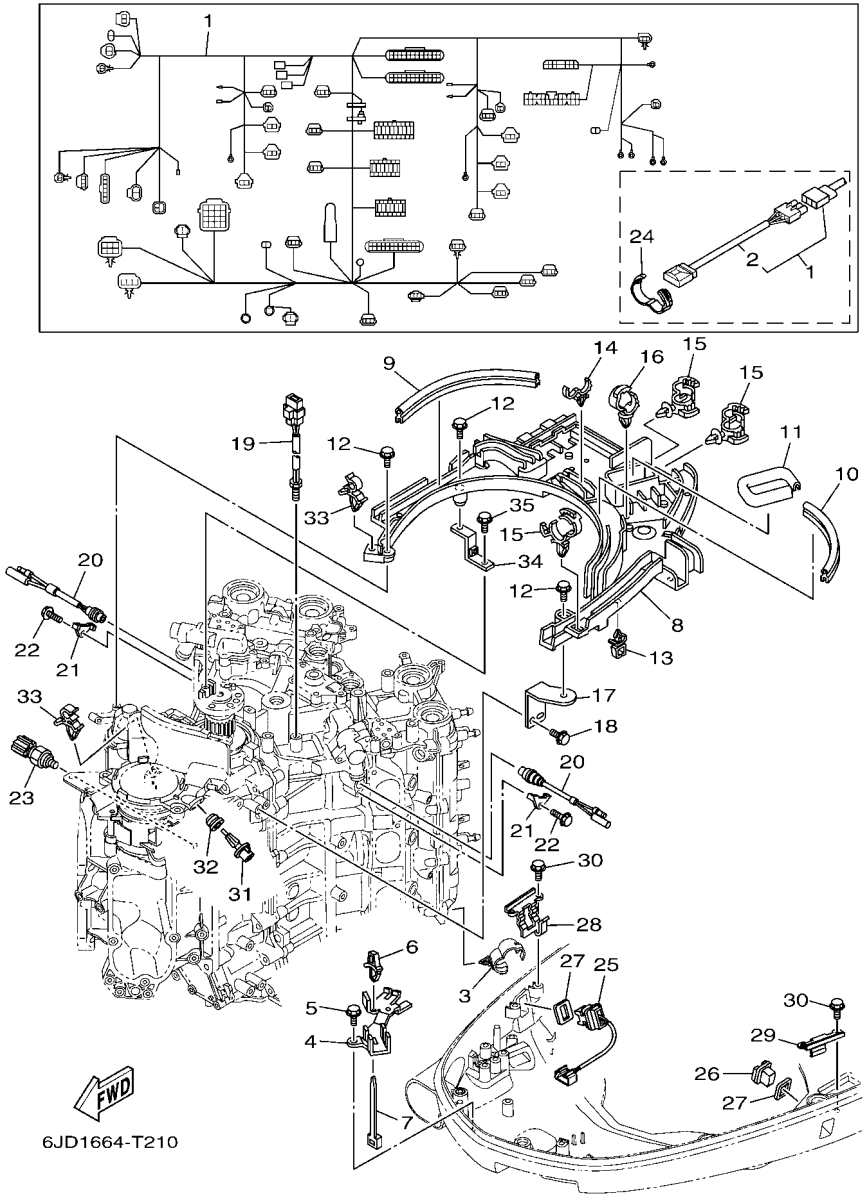

REF. NO.	PART NO. N° PIECES	DESCRIPTION DESCRIPTION	6JD8	6JE8				REMARKS REMARQUES
1	6CE–82590–1A	WIRE HARNESS ASSY FAISCEAU DE FILS COMPLET	1	1				FOR TILT LIMIT FOR TILT LIMIT
2	6CE–81980–01	.DIODE ASSY .REDRESSEUR 2	1	1				
3	90464–20181	CLAMP BRIDE	4	4				
4	6CB–82594–00	CLAMP BRIDE	1	1				
5	95D95–06012	BOLT, FLANGE DEEP RECESS BOULON FIXATION	2	2				
6	90464–06001	CLAMP BRIDE	1	1				
7	90465–13M24	CLAMP BRIDE	1	1				
8	6CB–82589–01	PROTECTER, WIRE HARNESS PROTECTEUR, FAISCEAU DE FILS	1	1				
9	6BG–42617–00	DAMPER, FORM BOURRELET, CAOUTCHOUC	1	1				
10	6CB–42617–00	DAMPER, FORM BOURRELET, CAOUTCHOUC	1	1				
11	6CB–42629–00	SEAL JOINT	1	1				
12	95D95–06020	BOLT, FLANGE DEEP RECESS BOULON FIXATION	5	5				
13	90464–11121	CLAMP BRIDE	1	1				
14	90464–18246	CLAMP BRIDE	1	1				
15	90464–12183	CLAMP BRIDE	4	4				
16	90464–20181	CLAMP BRIDE	2	2				
17	6CB–82388–00	PLATE PLAQUETTE	1	1				
18	95D95–06016	BOLT, FLANGE DEEP RECESS BOULON FIXATION	2	2				
19	6CB–85790–00	THERMOSENSOR ASSY SENSITOMETRE	1	1				
20	6P2–82560–01	THERMO SWITCH ASSY THERMO-CONTACT COMPLET	2	2				
21	6E9–82588–00	PLATE PLAQUE	2	2				
22	95D95–06012	BOLT, FLANGE DEEP RECESS BOULON FIXATION	2	2				
23	6AW–83651–01	SENDER, OIL PRESSURE RACCORD, PRESSION D'HUILE	1	1				
24	90464–16001	CLAMP BRIDE	1	1				
25	6BR–82563–01	TRIM & TILT SWITCH ASSY INCLINER ET PARER COMMUTATEUR	1	1				
26	69J–42723–01	COVER, BOTTOM COUVERCLE	1	1				
27	69J–82587–01	GASKET JOINT	2	2				

FIG. 21 ELECTRICAL 4 — PARTIE ELECTRIQUE 4

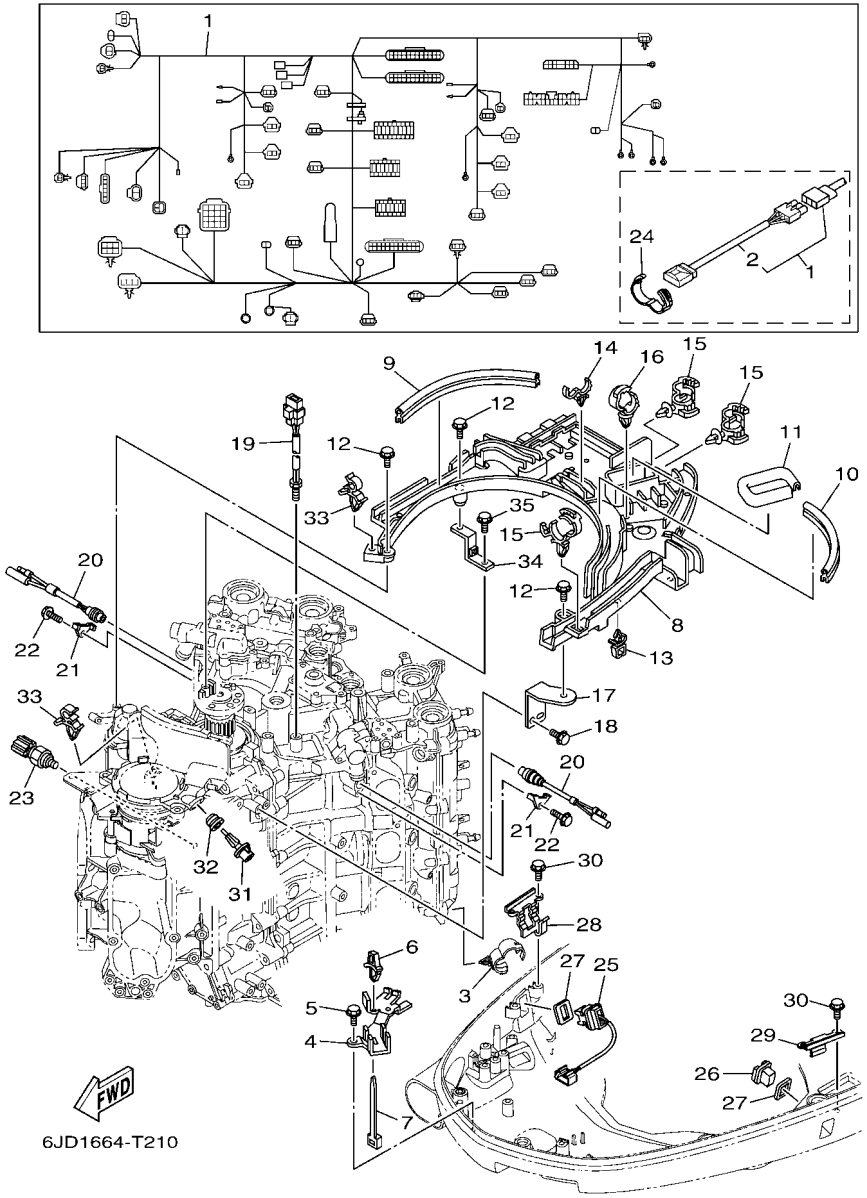

REF. NO.	PART NO. N° PIECES	DESCRIPTION DESCRIPTION	6JD8	6JE8				REMARKS REMARQUES
28	63P–83614–01	BRACKET SUPPORT	1	1				
29	6DA–83614–00	BRACKET SUPPORT	1	1				
30	95D95–06012	BOLT, FLANGE DEEP RECESS BOULON FIXATION	4	4				
31	63P–85886–00	SENSOR, AIR TEMPERATURE SONDE	1	1				
32	6CE–14435–00	GROMMET RONDELLE CAOUTCHOUC	1	1				
33	90464–09129	CLAMP BRIDE	2	2				
34	6CB–81952–00	HOLDER, RELAY SUPPORT, RELAIS	1	1				
35	95D95–06016	BOLT, FLANGE DEEP RECESS BOULON FIXATION	1	1				

FIG. 22 ELECTRICAL 5 — PARTIE ELECTRIQUE 5

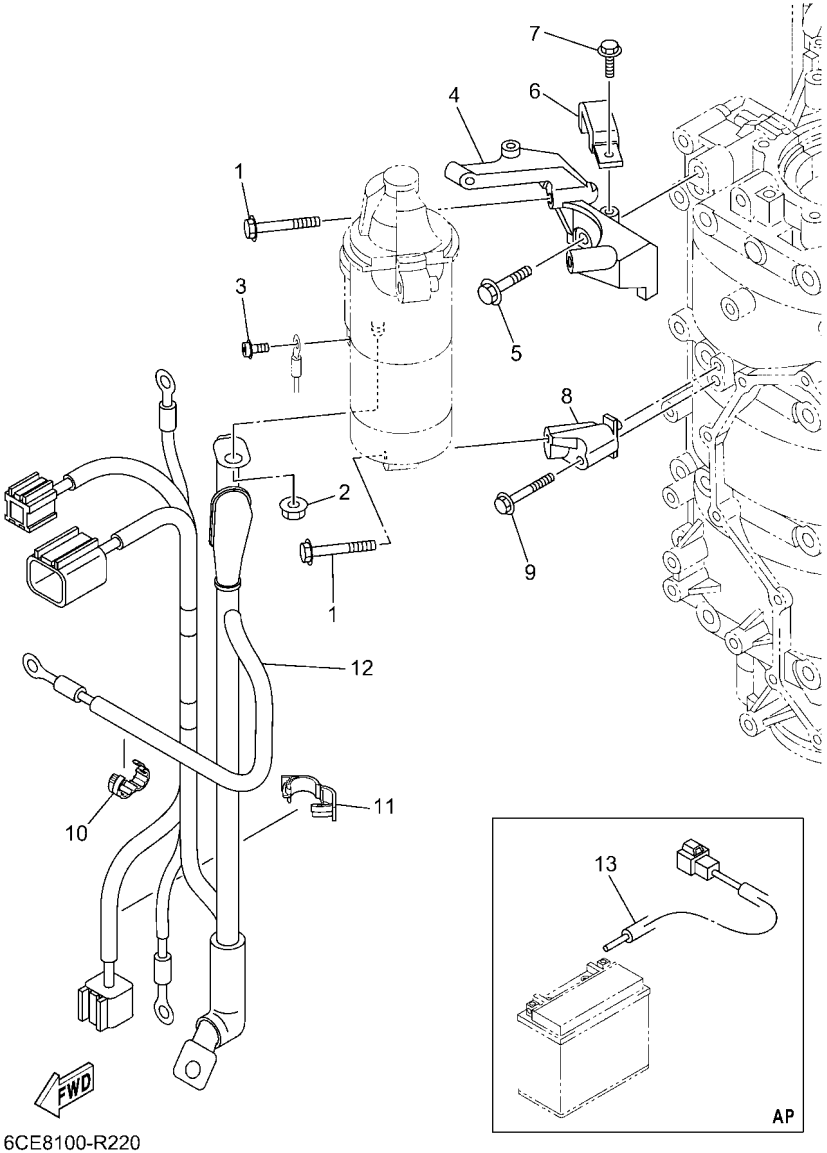

6CE8100-R220

REF. NO.	PART NO. N° PIECES	DESCRIPTION DESCRIPTION	6JD8	6JE8				REMARKS REMARQUES
1	97513–08545	BOLT, WITH WASHER VIS HEXAGONAL AVC RONDELLE	3	3				
2	90179–08003	NUT ECROU	1	1				
3	97985–04308	SCREW, WITH WASHER VIS, AVEC RONDELLE	1	1				
4	6CB–81822–02	BRACKET, STARTING MOTOR SUPPORT, DEMARREUR ELECTRIQUE	1	1				
5	90105–08M87	BOLT, FLANGE BOULON, A COLLERETTE	2	2				
6	6CB–81443–00	CLAMP, LEAD 1 BRIDE, FIL 1	1	1				
7	95D95–06016	BOLT, FLANGE DEEP RECESS BOULON FIXATION	1	1				
8	6CB–81823–B0	STAY, STARTING MOTOR SUPPORT	1	1				
9	90105–06151	BOLT, FLANGE BOULON, A COLLERETTE	1	1				
10	90464–13227	CLAMP BRIDE	1	1				
11	90464–18004	CLAMP BRIDE	1	1				
12	6CE–8259M–01	WIRE HARNESS ASSY 2 FAISCEAU DE FILS	1	1				
13	6KW–81949–00	WIRE, LEAD (ISOLATOR, 3.8M) FIL (ISOLATOR, 3.8M)	1	1				AP AP

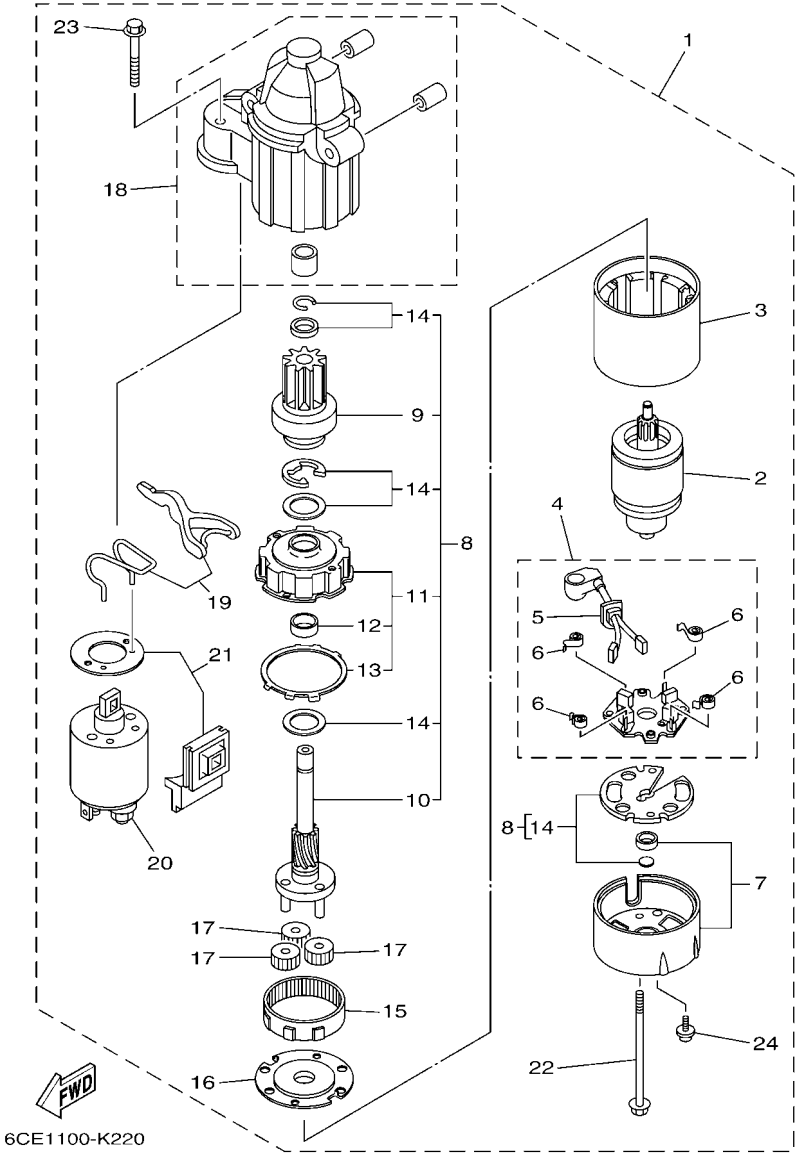

FIG. 23 STARTING MOTOR — DEMARREUR ELECTRIQUE

REF. NO.	PART NO. N° PIECES	DESCRIPTION DESCRIPTION	6JD8	6JE8				REMARKS REMARQUES
1	6CE–81800–02	STARTING MOTOR ASSY DEMARREUR ELECTRIQUE COMPLET	1	1				
2	6CE–81850–00	.ARMATURE ASSY .INDUIT	1	1				
3	6CE–81810–00	.STATOR ASSY .STATOR COMPLET	1	1				
4	6CE–81840–01	.BRUSH HOLDER ASSY .SUPPORT DE CHARBON	1	1				
5	6CE–81801–01	..BRUSH SET ..JEU DE BROSSE	1	1				
6	67F–81813–00	..SPRING, BRUSH ..RESSORT, DE CHARBON	4	4				
7	6CE–81820–00	.REAR BRACKET ASSY .SUPPORT ARRIERE COMPLET	1	1				
8	6CE–81807–00	.GEAR ASSY, STARTING MOTOR .PIGNON, DEMARREUR ELECTRIQUE	1	1				
9	6CB–81832–00	..CLUTCH, OVER RUN ..EMBRAYAGE, ROUE LIBRE	1	1				
10	6CB–81836–00	..SHAFT, PINION ..AXE, PIGNON	1	1				
11	6CE–81821–00	..BRACKET, CENTER 1 ..SUPPORT, CENTRE 1	1	1				
12	67F–81841–00	...BEARING ...ROULEMENT	1	1				
13	67F–8183R–00	...GASKET ...JOINT	1	1				
14	6CB–81809–00	..WASHER KIT ..JEU DE RONDELLES	1	1				
15	67F–81891–00	.GEAR, RING .ROUE DENTEE	1	1				WITH 67F-8183R-00 WITH 67F-8183R-00
16	6CE–81830–00	.BRACKET, CENTER 2 .SUPPORT, CENTRE 2	1	1				
17	60V–8183T–00	.GEAR, IDLER .PIGNON, INTERMEDIAIRE	3	3				
18	6CE–81842–00	.COVER .COUVERCLE	1	1				
19	6CE–81839–00	.LEVER ASSY .LEVIER COMPLET	1	1				
20	6C5–81941–01	.STARTER RELAY ASSY .LANCEUR RELAIS (ENS.)	1	1				
21	6CE–81869–00	.COVER, DUST .COUVERCLE, POUSSIERE	1	1				
22	6CB–81826–00	.BOLT .BOULON	2	2				
23	69J–81828–00	.BOLT 2 .BOULON 2	2	2				
24	67F–81846–00	.SCREW .VIS	2	2				

FIG. 24 BOTTOM COWLING 1 — CAPOT INFERIEUR 1

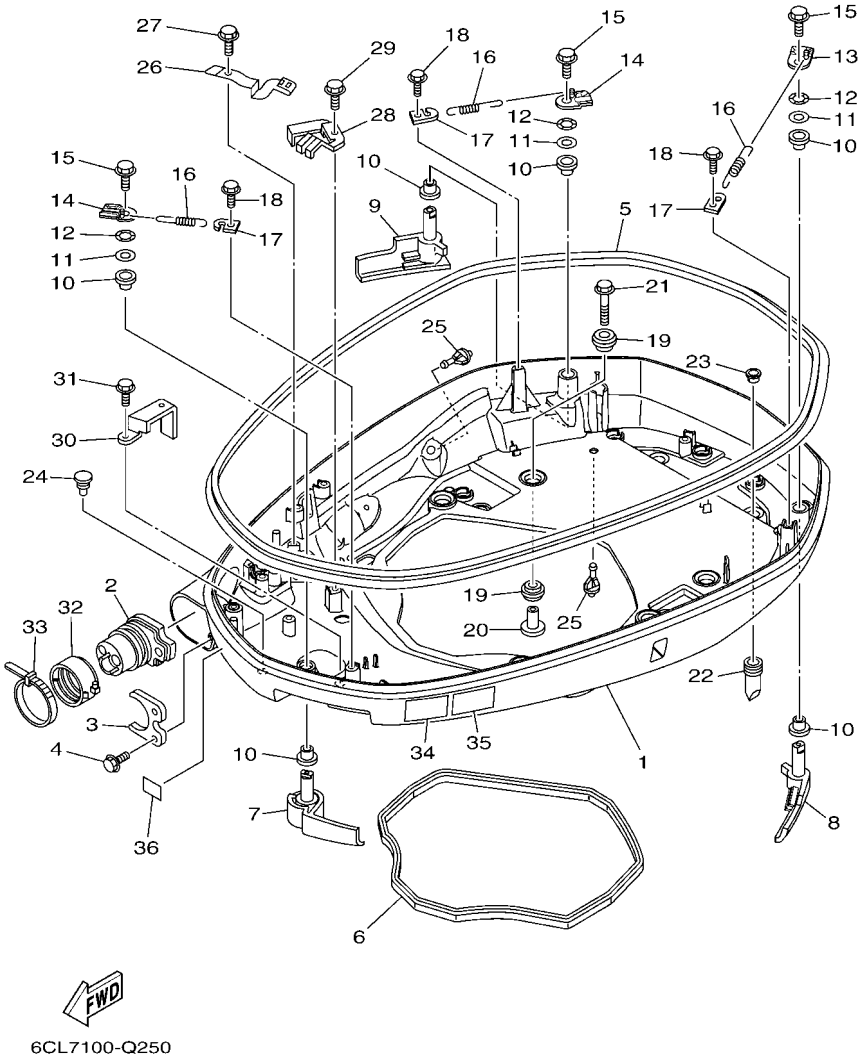

REF. NO.	PART NO. N° PIECES	DESCRIPTION DESCRIPTION	6JD8	6JE8				REMARKS REMARQUES
1	6CB–42710–00–8D	BOTTOM COWLING ASSY ENS. EMBASE	1	1				
2	6CE–42725–04	GROMMET PASSE-FIL	1	1				
3	6CB–42761–00	STOPPER PLAQUETTE	1	1				
4	95D95–06014	BOLT, FLANGE DEEP RECESS BOULON FIXATION	2	2				
5	6CB–42615–01	SEAL JOINT	1	1				
6	6CB–42716–01	RUBBER SEAL 1 JOINT EN CAOUTCHOUC 1	1	1				
7	6CB–42815–02–8D	LEVER, CLAMP 1 LEVIER, PRESSE 1	1	1				
8	6CB–42816–02–8D	LEVER, CLAMP 2 LEVIER, PRESSE 2	1	1				
9	6CB–42817–02–8D	LEVER, CLAMP 3 LEVIER, PRESSE 3	1	1				
10	90386–15M73	BUSH DOUILLE	6	6				
11	90201–156J2	WASHER, PLATE RONDELLE, PLATE	3	3				
12	90206–15M18	WASHER, WAVE RONDELLE, ONDULEE	3	3				
13	6CB–42818–00	LEVER, CLAMP 4 LEVIER, PRESSE 4	1	1				
14	6CB–42819–00	LEVER, CLAMP 5 LEVIER, PRESSE 5	2	2				
15	95D95–08012	BOLT, FLANGE DEEP RECESS BOULON FIXATION	3	3				
16	90506–22001	SPRING, TENSION RESSORT, TENSION	3	3				
17	66T–43144–00	HOOK, SPRING CROCHET	3	3				
18	95D95–06012	BOLT, FLANGE DEEP RECESS BOULON FIXATION	3	3				
19	90480–22M81	GROMMET PASSE-FIL	12	12				
20	90387–08M37	COLLAR COLLERETTE	6	6				
21	90119–08187	BOLT, WITH WASHER BOULON, AVEC RONDELLE	6	6				
22	6DA–42717–01	RUBBER, SEAL 2 JOINT EN CAOUTCHOUC 2	2	2				
23	6DA–42384–00	SEAL, CAP JOINT, CAPUCHON	2	2				
24	6H4–42748–01	GROMMET PASSE-FIL	1	1				
25	6P2–44391–00	NIPPLE, HOSE RACCORD D'ESSENCE	2	2				
26	6CB–42743–00	BRACKET SUPPORT	1	1				
27	95D95–06012	BOLT, FLANGE DEEP RECESS BOULON FIXATION	1	1				

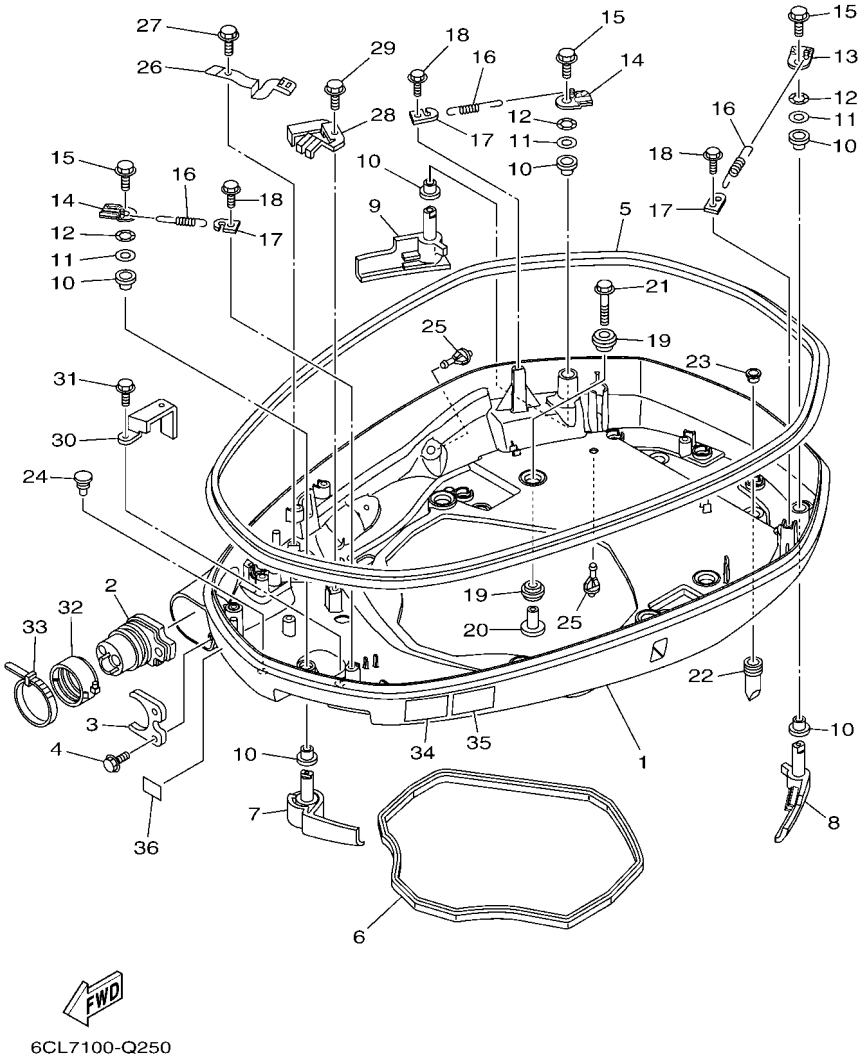

FIG. 24 BOTTOM COWLING 1 — CAPOT INFERIEUR 1

REF. NO.	PART NO. N° PIECES	DESCRIPTION DESCRIPTION	6JD8	6JE8				REMARKS REMARQUES
28	6CB–42766–00	BRACKET 2 SUPPORT 2	1	1				
29	95D95–06012	BOLT, FLANGE DEEP RECESS BOULON FIXATION	1	1				
30	6CB–42756–00	STAY, CLAMP SUPPORT, COLLIER	1	1				
31	95D95–06012	BOLT, FLANGE DEEP RECESS BOULON FIXATION	1	1				
32	68F–42753–00	FASTNER ATTACHE	1	1				AP AP
33	90464–20258	CLAMP BRIDE	1	1				AP AP
34	6EE–42794–41	LABEL, WARNING (GENERAL) ETIQUETTE, AVERTISSEMENT	1	1				
35	6EE–42794–51	LABEL, WARNING (GENERAL) ETIQUETTE, AVERTISSEMENT	1	1				
36	6AH–81996–01	MARK MARQUE	1	1				

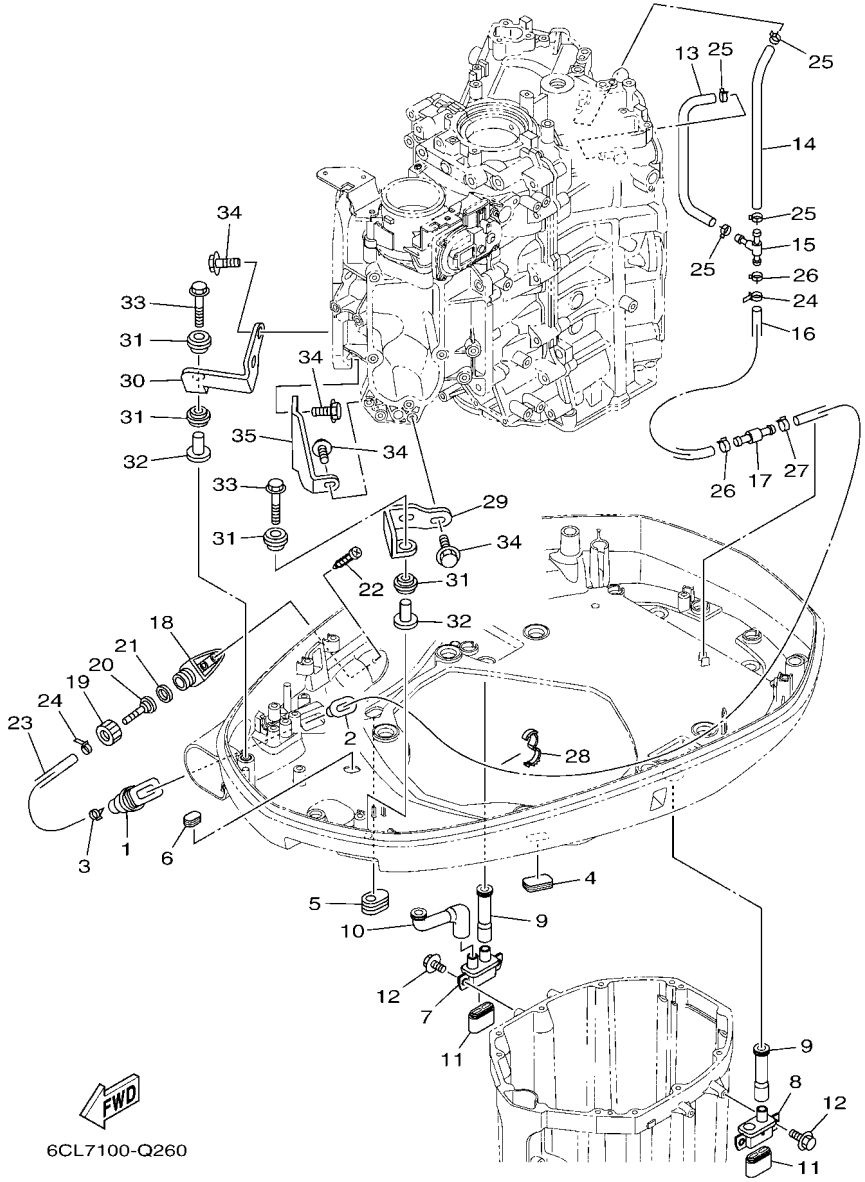

FIG. 25 BOTTOM COWLING 2 — CAPOT INFERIEUR 2

REF. NO.	PART NO. N° PIECES	DESCRIPTION DESCRIPTION	6JD8	6JE8				REMARKS REMARQUES
1	6H1–42726–22	GROMMET PASSE-FIL	1	1				
2	6BG–42384–00	SEAL, CAP JOINT, CAPUCHON	1	1				
3	90465–11M10	CLAMP BRIDE	2	2				
4	6H4–42726–01	GROMMET PASSE-FIL	1	1				
5	61A–42727–01	GROMMET PASSE-FIL	1	1				
6	64G–42727–01	GROMMET PASSE-FIL	1	1				
7	6CE–42733–00	BOX, DRAIN BOITIER, VIDANGE	1	1				
8	6CE–42734–00	BOX, DRAIN 2 BOITIER, VIDANGE 2	1	1				
9	6CE–42786–01	HOSE, DRAIN 1 DURITE, VIDANGE 1	2	2				
10	6CE–42787–01	HOSE, DRAIN 2 DURITE, VIDANGE 2	1	1				
11	69J–42717–01	RUBBER, SEAL 2 JOINT EN CAOUTCHOUC 2	2	2				
12	95D95–06016	BOLT, FLANGE DEEP RECESS BOULON FIXATION	4	4				
13	6CB–24315–00	PIPE 5 DURITE 5	1	1				
14	90445–14021	HOSE (L185) DURITE (L185)	1	1				
15	6AW–42169–00	JOINT AXE	1	1				
16	90445–16015	HOSE (L300) DURITE (L300)	1	1				
17	6AW–42785–00	PIPE DURITE	1	1				
18	6AW–12572–00	ADAPTER ADAPTATEUR	1	1				
19	6R3–12581–10	JOINT, HOSE 1 JOINT DE TUYAU	1	1				
20	6AW–12582–00	JOINT, HOSE 2 RACCORD DE TUYAU 1	1	1				
21	6R3–12583–10	GASKET, HOSE JOINT JOINT	1	1				
22	97780–60520	SCREW, TAPPING VIS, TETE BOMBEE	2	2				
23	90445–14019	HOSE (L1460) DURITE (L1460)	1	1				
24	90465–11M10	CLAMP BRIDE	2	2				
25	90467–130A5	CLIP JONC	4	4				
26	90467–140A8	CLIP JONC	2	2				
27	90467–140A9	CLIP JONC	1	1				

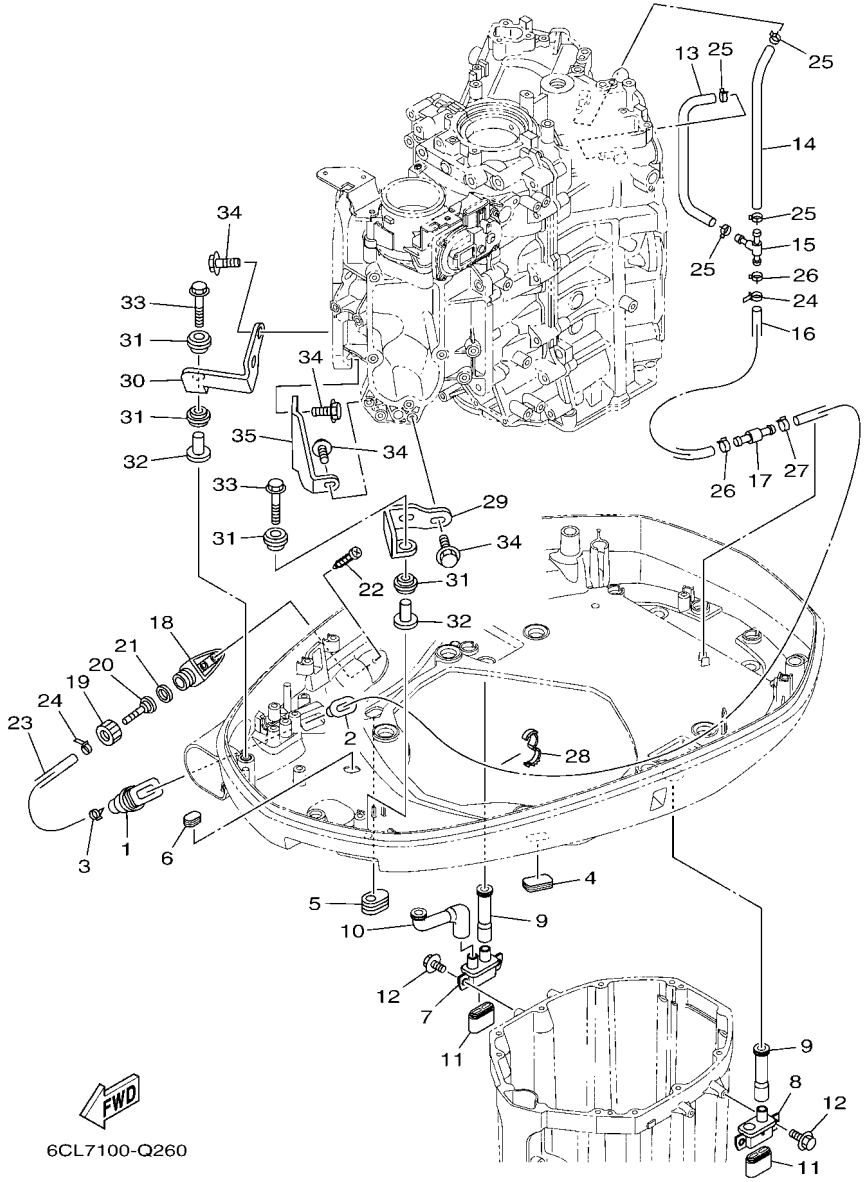

FIG. 25 BOTTOM COWLING 2 — CAPOT INFERIEUR 2

REF. NO.	PART NO. N° PIECES	DESCRIPTION DESCRIPTION	6JD8	6JE8				REMARKS REMARQUES
28	90464–16001	CLAMP BRIDE	1	1				
29	6CB–42643–00	PLATE, CLAMP PLAQUE, PRESSE	1	1				
30	6CB–42644–00	PLATE, CLAMP 2 PLAQUE, PRESSE 2	1	1				
31	90480–14029	GROMMET PASSE-FIL	4	4				
32	90387–06M03	COLLAR COLLERETTE	2	2				
33	90119–06291	BOLT, WITH WASHER BOULON, AVEC RONDELLE	2	2				
34	90105–06039	BOLT, FLANGE BOULON, A COLLERETTE	6	6				
35	6CB–42744–00	STAY SUPPORT	1	1				

FIG. 26 BOTTOM COWLING 3 — CAPOT INFERIEUR 3

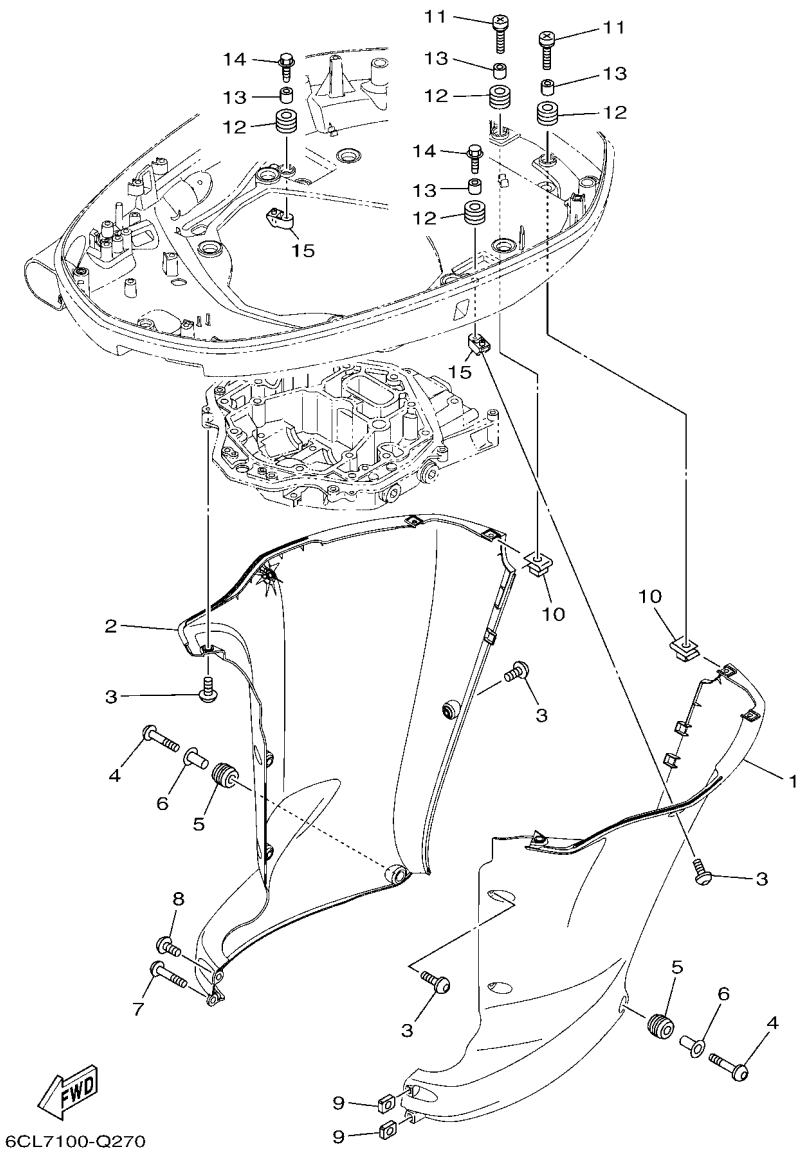

REF. NO.	PART NO. N° PIECES	DESCRIPTION DESCRIPTION	6JD8	6JE8				REMARKS REMARQUES
1	6CE–42741–02–8D	APRON, 1 CAPOT LATERAL 1	1	1				
2	6CE–42771–02–8D	APRON, 2 CAPOT LATERAL 2	1	1				
3	90111–06144	BOLT, HEXAGON SOCKET BUTTON BOULON	10	10				
4	90111–06142	BOLT, HEXAGON SOCKET BUTTON BOULON	2	2				
5	90480–16009	GROMMET PASSE-FIL	2	2				
6	90387–07028	COLLAR COLLERETTE	2	2				
7	90111–06142	BOLT, HEXAGON SOCKET BUTTON BOULON	1	1				
8	90111–06144	BOLT, HEXAGON SOCKET BUTTON BOULON	1	1				
9	90173–06001	NUT, SQUARE ECROU, CARRE	2	2				
10	90183–061A8	NUT, SPRING ECROU, RESSORT	4	4				
11	90159–06053	SCREW, WITH WASHER VIS, AVEC RONDELLE	4	4				
12	90480–13M24	GROMMET PASSE-FIL	6	6				
13	90387–06M43	COLLAR COLLERETTE	6	6				
14	90109–06M80	BOLT BOULON	2	2				
15	6CE–42774–B0	STAY, APRON 1 COUSSINET	2	2				

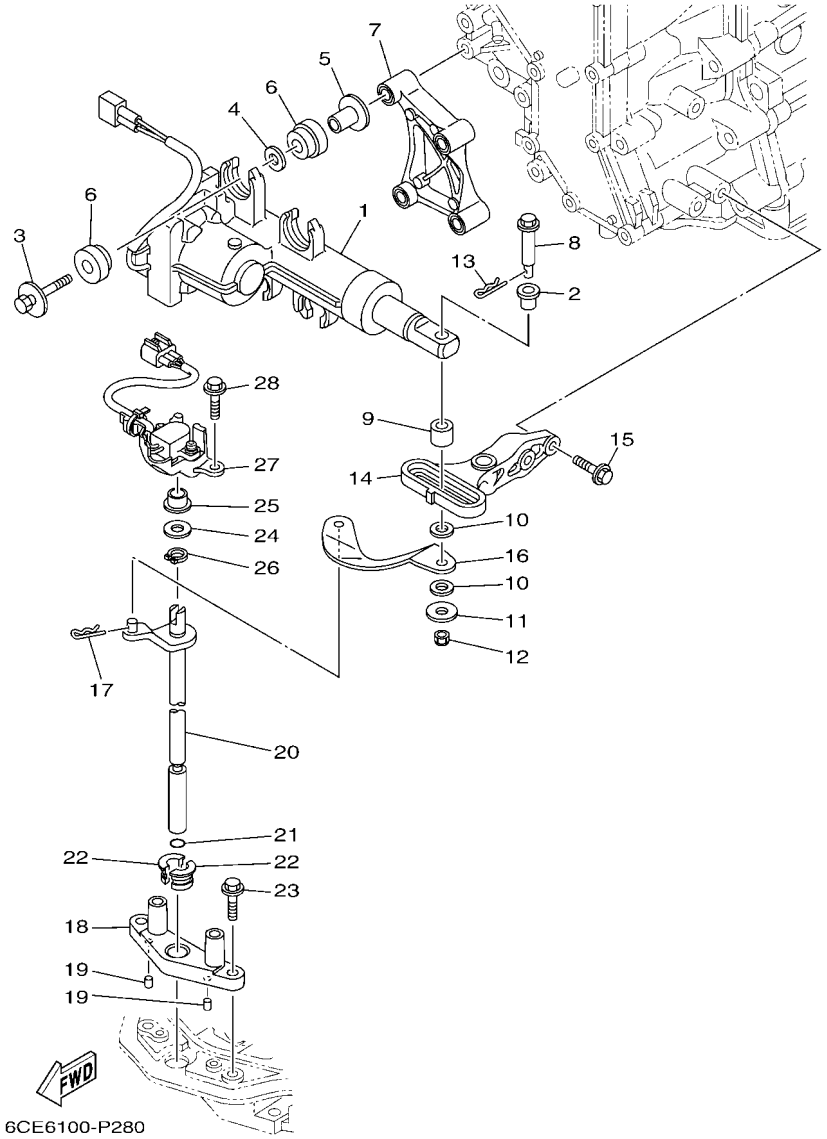

FIG. 27 CONTROL — COMMANDE

REF. NO.	PART NO. N° PIECES	DESCRIPTION DESCRIPTION	6JD8	6JE8				REMARKS REMARQUES
1	6ML–4820A–00	ACTUATOR UNIT ACTUATOR UNIT	1	1				
2	90386–08008	BUSH DOUILLE	1	1				
3	90119–08168	BOLT, WITH WASHER BOULON, AVEC RONDELLE	4	4				
4	90201–12064	WASHER, PLATE RONDELLE, PLATE	4	4				
5	90387–08104	COLLAR COLLERETTE	4	4				
6	6CE–85564–00	GROMMET RONDELLE CAOUTCHOUC	8	8				
7	6CE–44142–20	JOINT AXE	1	1				
8	6CE–42195–10	PIN, JOINT 1 GOUPILLE	1	1				
9	6CE–44122–20	BUSHING, SHIFT ROD LEVER DOUILLE, LEVIER D'EMBRAYAGE	1	1				
10	90202–08M41	WASHER, PLATE RONDELLE, PLATE	2	2				
11	90201–06068	WASHER, PLATE RONDELLE, PLATE	1	1				
12	90185–06M07	NUT, SELF-LOCKING ECROU,AUTO-BLOQUANT	1	1				
13	90468–18008	CLIP JONC	1	1				
14	6CE–44117–10	BRACKET SUPPORT	1	1				
15	97E75–06525	BOLT, HEXAGON W/W DEEP RECESS VIS HEXAGONAL AVC RONDELLE	2	2				
16	6CE–44121–10	LEVER, SHIFT ROD LEVIER, TIGE D'INVERSION	1	1				
17	90468–18008	CLIP JONC	1	1				
18	6CE–44118–A0	BRACKET SUPPORT	1	1				
19	93604–07M13	PIN, DOWEL CLAVETTE	2	2				
20	6JD–44120–01	HANDLE GEAR SHIFT ASSY LEVIER D'EMBRAYAGE	1	1				
21	93210–09165	O-RING JOINT TORIQUE	1	1				
22	90386–11001	BUSH DOUILLE	2	2				
23	95D75–06025	BOLT, FLANGE DEEP RECESS BOULON FIXATION	2	2				
24	90201–11008	WASHER, PLATE RONDELLE, PLATE	1	1				
25	90386–10001	BUSH DOUILLE	1	1				
26	93410–10082	CIRCLIP CIRCLIP	1	1				
27	6CE–68303–00	SENSOR ASSY SONDE (ENS.)	1	1				

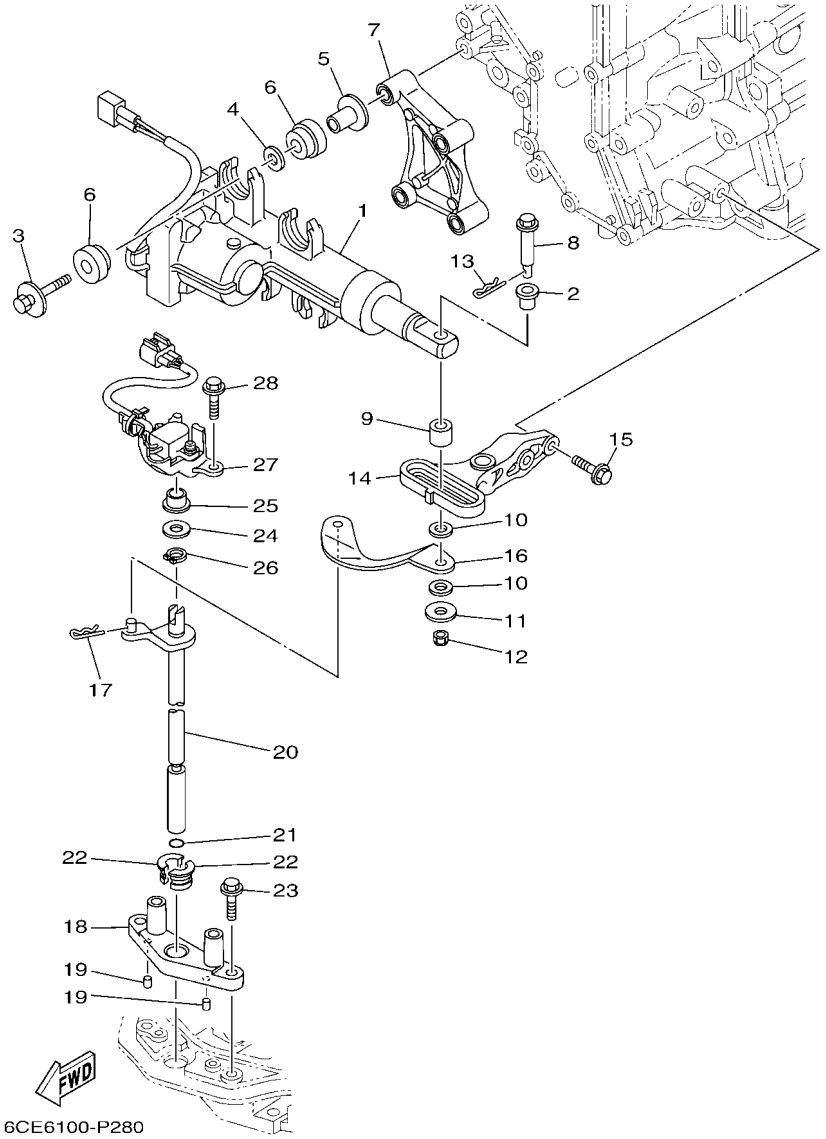

FIG. 27 CONTROL — COMMANDE

REF. NO.	PART NO. N° PIECES	DESCRIPTION DESCRIPTION	6JD8	6JE8				REMARKS REMARQUES
28	95D75–06025	BOLT, FLANGE DEEP RECESS BOULON FIXATION	2	2				

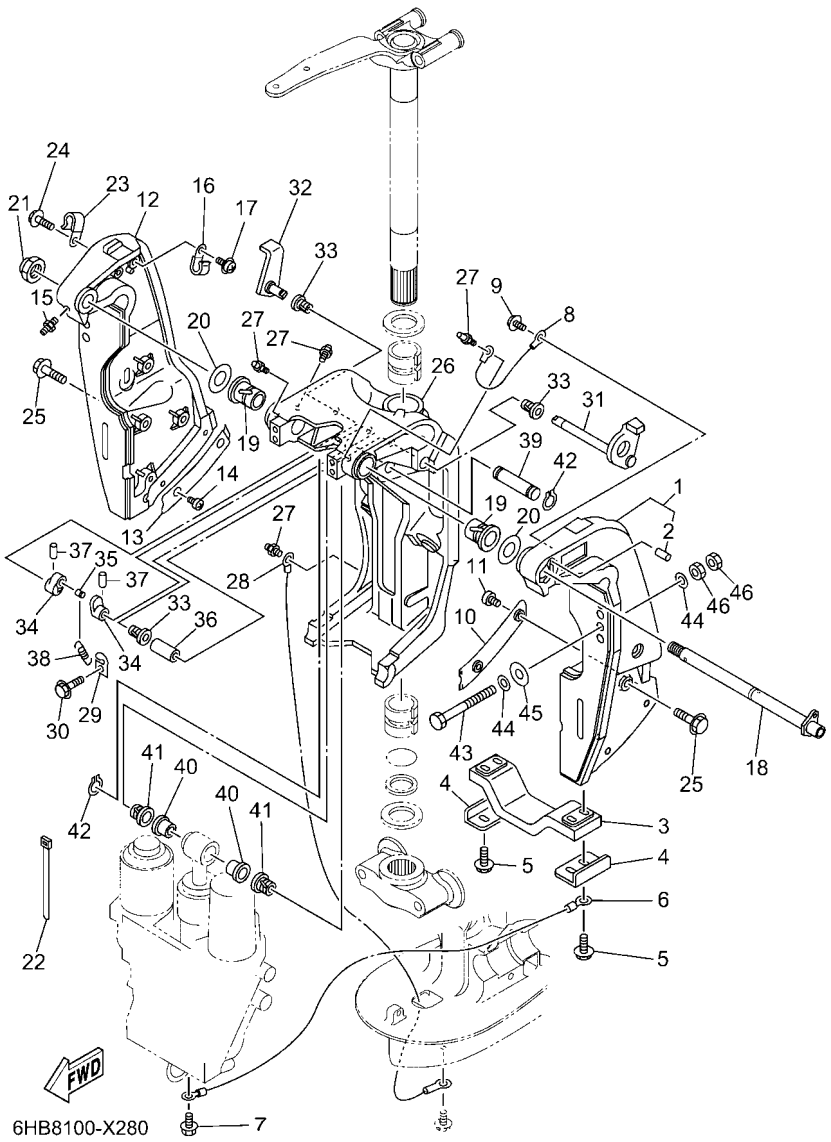

FIG. 28 BRACKET 1 SUPPORT 1

REF. NO.	PART NO. N° PIECES	DESCRIPTION DESCRIPTION	6JD8	6JE8				REMARKS REMARQUES
1	69J–43111–11–8D	BRACKET, CLAMP 1 PRESSE 1	1	1				FOR TILT LIMIT FOR TILT LIMIT
2	93606–19002	.PIN, DOWEL .GOUPILLE	1	1				
3	6G5–45251–02	ANODE ANODE	1	1				
4	6G5–44526–00	PLATE PLAQUE	2	2				
5	97E95–06525	BOLT, HEXAGON W/W DEEP RECESS VIS HEXAGONAL AVC RONDELLE	4	4				
6	6H1–82148–00	WIRE, LEAD 4 FIL 4	1	1				
7	97E95–06510	BOLT, HEXAGON W/W DEEP RECESS VIS HEXAGONAL AVC RONDELLE	1	1				
8	6E5–82148–00	WIRE, LEAD 4 FIL 4	1	1				
9	97985–06212	SCREW, WITH WASHER VIS, AVEC RONDELLE	1	1				
10	61A–43132–01	WASHER, FRICTION RONDELLE, FRICTION	1	1				
11	97885–06010	SCREW, PAN HEAD VIS, A ENCOCHE	2	2				
12	69J–43112–03–8D	BRACKET, CLAMP 2 PRESSE 2	1	1				
13	61A–43133–01	WASHER,FRICTION RONDELLE	1	1				
14	97885–06010	SCREW, PAN HEAD VIS, A ENCOCHE	2	2				
15	93700–06002	NIPPLE, GREASE PION	1	1				
16	90465–08M83	CLAMP BRIDE	1	1				
17	97985–06212	SCREW, WITH WASHER VIS, AVEC RONDELLE	1	1				
18	6R3–43131–30	BOLT, CLAMP BRACKET BOULON, PRESSE	1	1				FOR TILT LIMIT FOR TILT LIMIT
19	90386–25M31	BUSH DOUILLE	2	2				
20	90201–26M59	WASHER, PLATE RONDELLE, PLATE	2	2				
21	90185–22M11	NUT, SELF-LOCKING ECROU,AUTO-BLOQUANT	1	1				
22	90465–11M10	CLAMP BRIDE	4	4				
23	90465–08M83	CLAMP BRIDE	1	1				
24	97585–06510	BOLT, WITH WASHER VIS HEXAGONAL AVC RONDELLE	1	1				
25	90119–10024	BOLT, WITH WASHER BOULON, AVEC RONDELLE	8	8				
26	61A–43311–22–8D	BRACKET, SWIVEL 1 SUPPORT, PIVOT 1	1	1				
27	93700–06002	NIPPLE, GREASE PION	5	5				

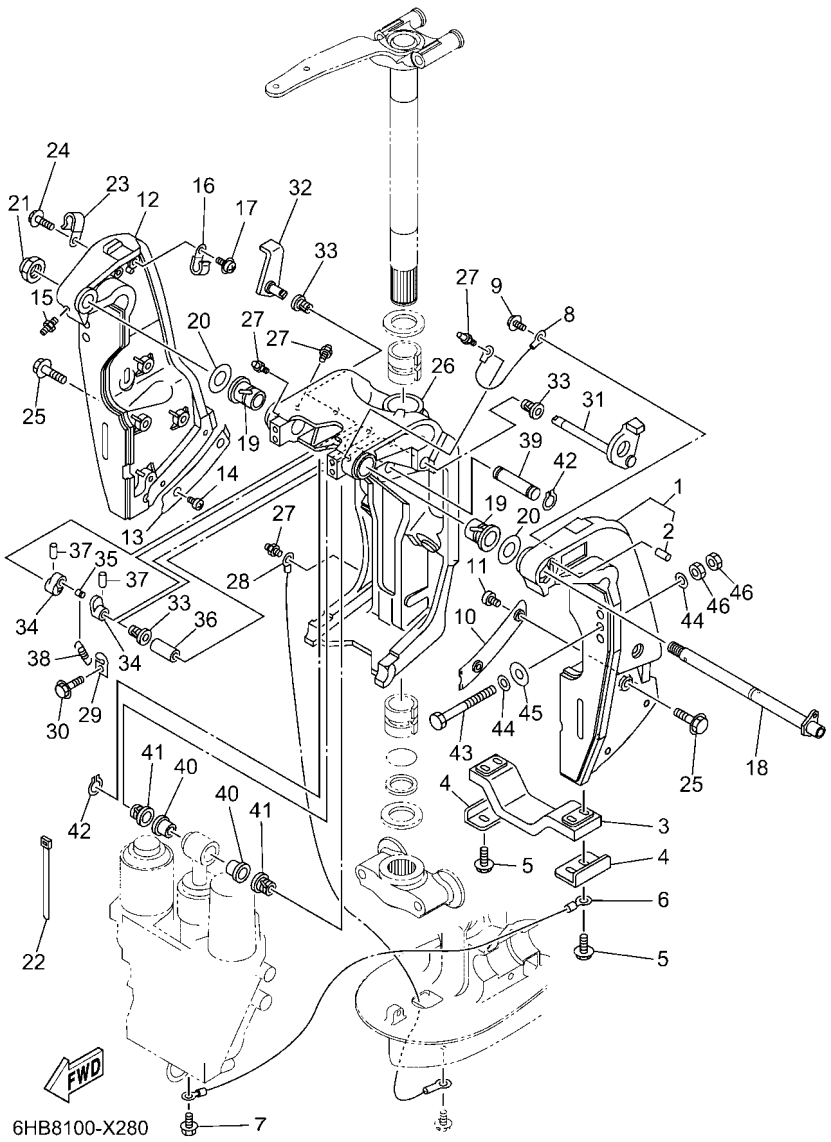

FIG. 28 BRACKET 1 — SUPPORT 1

REF. NO.	PART NO. N° PIECES	DESCRIPTION DESCRIPTION	6JD8	6JE8				REMARKS REMARQUES
28	69J–82147–00	WIRE, LEAD 5 FIL 5	1	1				
29	6G5–43144–00	HOOK, SPRING CROCHET	1	1				
30	97E95–06512	BOLT, HEXAGON W/W DEEP RECESS VIS HEXAGONAL AVC RONDELLE	1	1				
31	61A–43181–01	LEVER, TILT STOP 1 LEVIER VERROUILLAGE RELEVAGE 1	1	1				
32	6G5–43185–02	LEVER, TILT STOP 2 LEVIER VERROUILLAGE RELEVAGE 2	1	1				
33	90386–10M16	BUSH DOUILLE	3	3				
34	6G5–43148–00	COLLAR, DISTANCE ENTRETOISE	2	2				
35	90249–06M19	PIN GOUPILLE	1	1				
36	90387–10M05	COLLAR COLLERETTE	1	1				
37	91690–30020	PIN, SPRING AGRAFFE	2	2				
38	90506–16003	SPRING, TENSION RESSORT, TENSION	1	1				
39	6E5–43126–10	PIN, UPPER SHOCK MOUNT AXE, SUPERIEUR AMORTISSEUR	1	1				
40	90386–18M63	BUSH DOUILLE	2	2				
41	90386–18M14	BUSH DOUILLE	2	2				
42	93410–18M05	CIRCLIP CIRCLIP	2	2				
43	90101–12065	BOLT (L:130MM) BOULON (L:130MM)	2	2				UR UR
	90101–12066	BOLT (L:150MM) BOULON (L:150MM)	2	2				UR UR
44	90201–13M01	WASHER, PLATE RONDELLE, PLATE	8	8				
45	90201–12426	WASHER, PLATE RONDELLE, PLATE	4	4				
46	95380–12600	NUT ECROU	8	8				

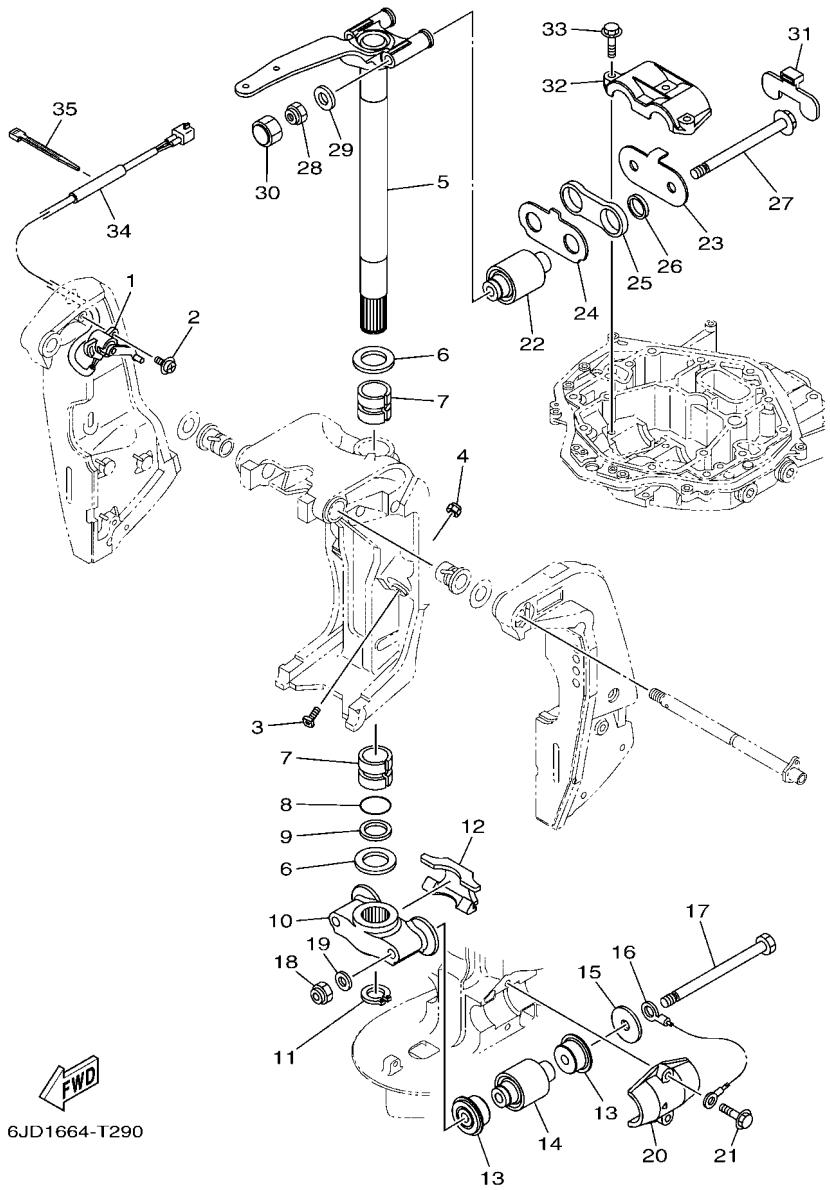

FIG. 29 BRACKET 2 — SUPPORT 2

REF. NO.	PART NO. N° PIECES	DESCRIPTION DESCRIPTION	6JD8	6JE8				REMARKS REMARQUES
1	69J–83672–13	TRIM SENDER INCLINER RACCORD	1	1				
2	97985–06216	SCREW, WITH WASHER VIS, AVEC RONDELLE	2	2				
3	6AW–43376–00	BOLT, THRUST RECEIVER BOULON	2	2				
4	95780–10300	NUT, FLANGE ECROU	2	2				
5	6CE–42510–00–8D	STEERING BRACKET ASSY DIRECTION SUPPORT (ENS.)	1	1				
6	90201–40M00	WASHER, PLATE RONDELLE, PLATE	2	2				
7	90386–39M89	BUSH DOUILLE	2	2				
8	93210–35321	O-RING JOINT TORIQUE	1	1				
9	90202–40M47	WASHER, PLATE RONDELLE, PLATE	1	1				
10	6CE–44551–00–CA	HOUSING, LOWER MOUNT RUBBER 1 BOITIER, SILENT-BLOC INFERIEUR	1	1				
11	93410–36102	CIRCLIP CIRCLIP	1	1				
12	6CE–44574–00	STOPPER, LOWER MOUNT RUBBER BUTEE	1	1				
13	6CE–44575–00	DAMPER, LOWER MOUNT RUBBER SILENT-BLOC, INFERIEUR	4	4				
14	6CE–44555–00	MOUNT DAMPER, LOWER SIDE SILENT-BLOC, INFERIEUR LATERAL	2	2				
15	90201–16032	WASHER, PLATE RONDELLE, PLATE	2	2				
16	6AW–82149–00	WIRE, LEAD 3 FIL 3	1	1				
17	90101–14004	BOLT BOULON	2	2				
18	90185–14M00	NUT, SELF-LOCKING ECROU,AUTO-BLOQUANT	2	2				
19	92995–14600	WASHER RONDELLE	2	2				
20	6CE–44552–00–CA	HOUSING, LOWER MOUNT RUBBER 2 BOITIER, SILENT-BLOC INFERIEUR	2	2				
21	90119–10024	BOLT, WITH WASHER BOULON, AVEC RONDELLE	4	4				
22	6CE–44514–00	MOUNT DAMPER, UPPER SIDE SILENT-BLOC, SUPERIEUR LATERAL	2	2				
23	6CE–44526–00	PLATE PLAQUE	1	1				
24	6CE–44536–00	PLATE 2 PLAQUETTE 2	1	1				
25	6CE–44532–01	STOPPER, UPPER MOUNT PLAQUETTE	1	1				
26	90387–28013	COLLAR COLLERETTE	2	2				
27	90105–14005	BOLT, FLANGE BOULON, A COLLERETTE	2	2				

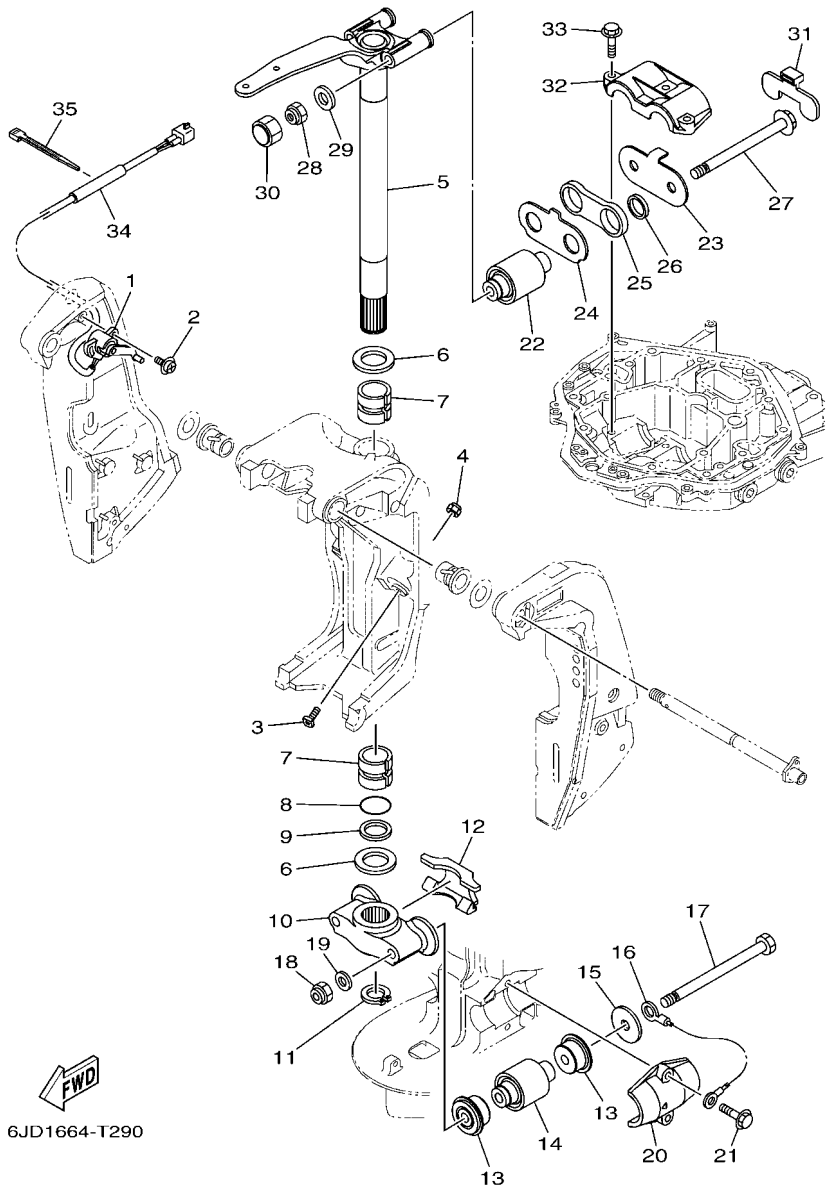

FIG. 29 BRACKET 2 — SUPPORT 2

REF. NO.	PART NO. N° PIECES	DESCRIPTION DESCRIPTION	6JD8	6JE8				REMARKS REMARQUES
28	90185–14M00	NUT, SELF-LOCKING ECROU,AUTO-BLOQUANT	2	2				
29	92995–14600	WASHER RONDELLE	2	2				
30	6CE–44194–01	CAP CAPUCHON	2	2				
31	6CE–44533–00	DAMPER, UPPER MOUNT RUBBER COUVERCLE, SUSPENSION INFERIEU	1	1				
32	6CE–44511–00	COVER, UPPER MOUNT COUVERCLE, SUSPENSION SUPERIEU	1	1				
33	90119–10024	BOLT, WITH WASHER BOULON, AVEC RONDELLE	3	3				
34	90446–15003	HOSE (L100) DURITE (L100)	1	1				
35	90465–11M10	CLAMP BRIDE	1	1				

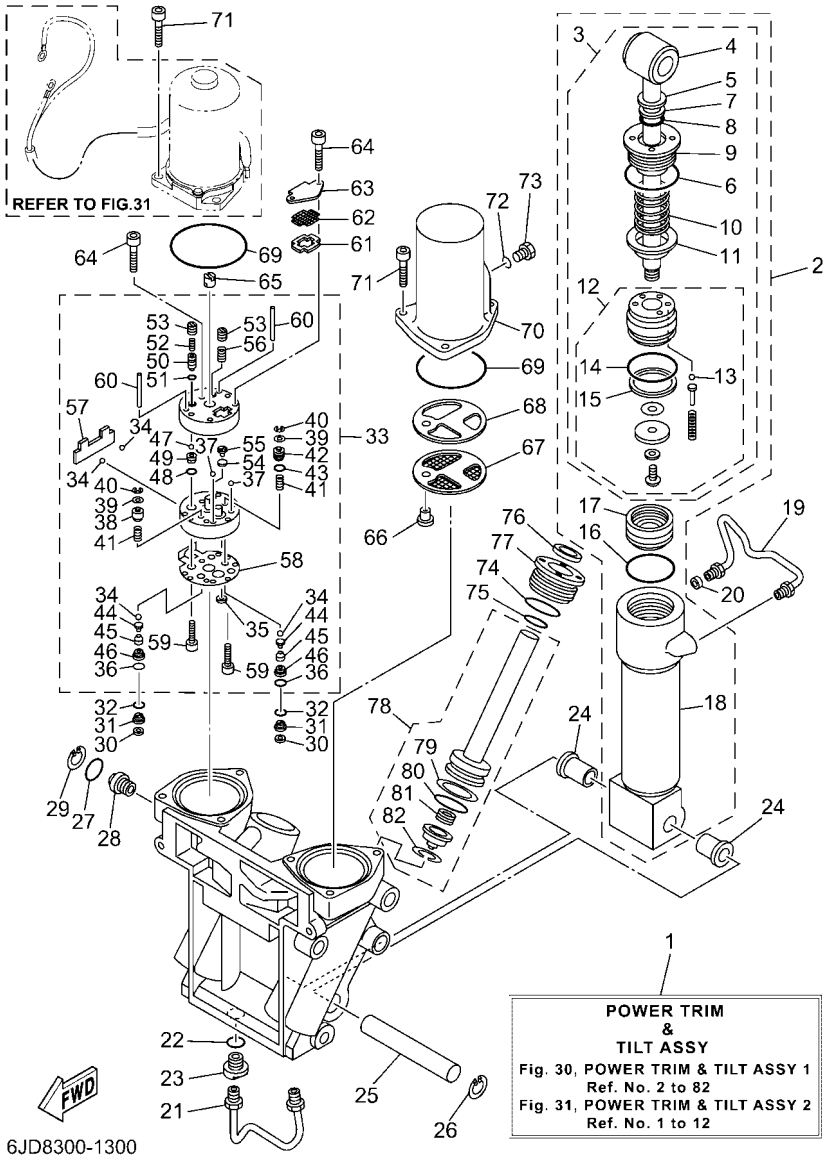

FIG. 30 POWER TRIM & TILT ASSY 1 — PUISSANCE PARER ET INCLINER 1

REF. NO.	PART NO. N° PIECES	DESCRIPTION DESCRIPTION	6JD8	6JE8				REMARKS REMARQUES
1	69J–43800–15–8D	POWER TRIM & TILT ASSY PUISSANCE PARER ET INCLINER (E	1	1				
2	6CE–43840–01	POWER TILT ASSY PUISSANCE INCLINER (ENS.)	1	1				
3	6CE–43810–01	.TILT PISTON SUB ASSY .INCLINER PISTON AUXILIAIRE(ENS	1	1				
4	69J–43801–01	..ROD ..TIGE	1	1				
5	93106–19001	..OIL SEAL ..JOINT SPY	1	1				
6	63P–43861–20	..O-RING ..JOINT TORIQUE	1	1				
7	6H1–43872–00	..RING, BACK UP ..RESSORT	1	1				
8	61A–4389H–01	..O-RING ..JOINT TORIQUE	1	1				
9	61A–43811–00	..SCREW, CYLINDER END ..VIS, CYLINDRE RACCORD	1	1				
10	69J–4384H–00	..SPRING ..RESSORT	1	1				
11	69J–4382E–00	..ADAPTOR 2 ..ADAPTEUR 2	1	1				
12	6CE–4380P–00	..PISTON SUB ASSY ..PISTON AUXILIAIRE (ENS.)	1	1				
13	93505–32038	...BALL ...BILLE	5	5				
14	61A–43861–00	...O-RING ...JOINT TORIQUE	1	1				
15	61A–43871–00	...RING, BACK UP ...SEGMENT	1	1				
16	61A–43861–00	.O-RING .JOINT TORIQUE	1	1				
17	6H1–43814–11	.PISTON, FREE .PISTON	1	1				
18	61A–43813–02	.CYLINDER, TILT .CYLINDRE	1	1				
19	69J–43835–10	PIPE TUYAU	1	1				
20	69J–4388J–00	PLUG 2 BOUCHON 2	1	1				
21	69J–43833–02	PIPE TUYAU	1	1				
22	93210–17239	O-RING JOINT TORIQUE	1	1				
23	69J–4388E–01	BOLT ,SCREW VIS	1	1				
24	90386–18M14	BUSH DOUILLE	2	2				
25	61A–43818–00	PIN, LOWER SHOCK MOUNT AXE, INFERIEUR AMORTISSEUR	1	1				
26	61A–43876–01	RING, SNAP RESSORT	1	1				
27	6D8–43863–00	O-RING JOINT TORIQUE	1	1				

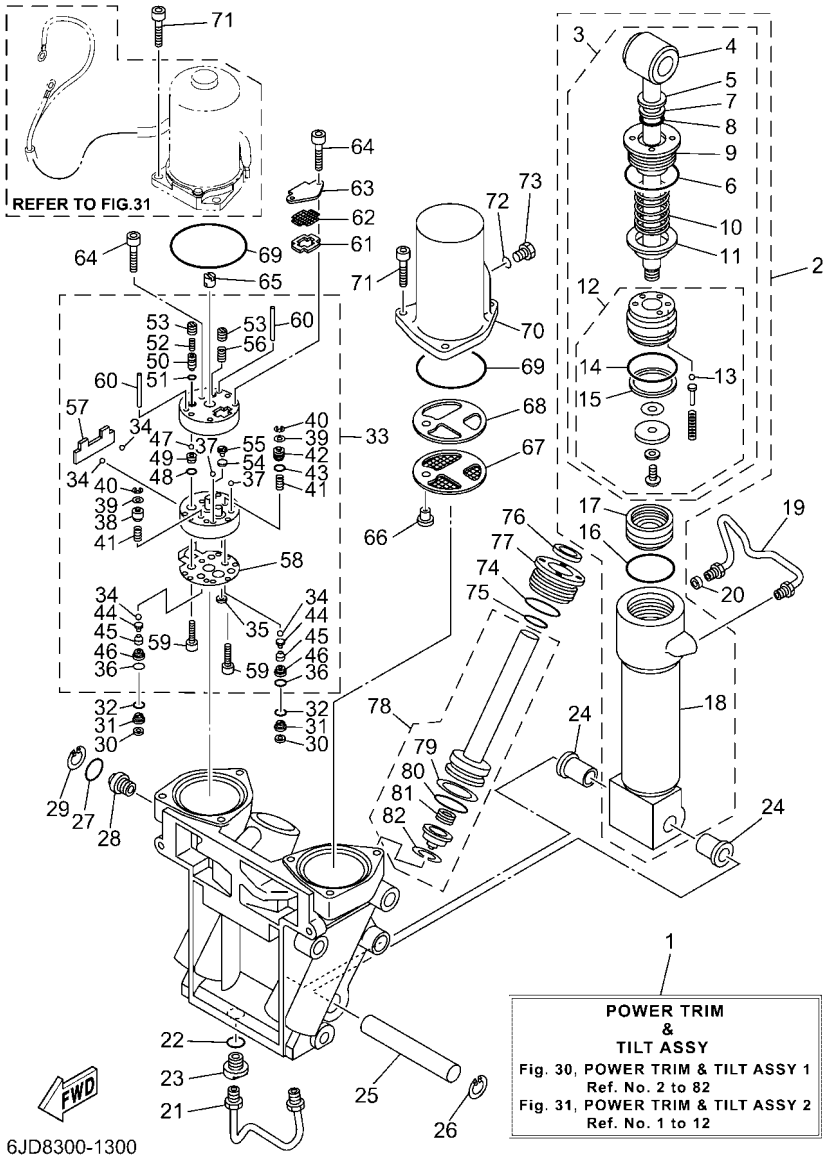

FIG. 30 POWER TRIM & TILT ASSY 1 — PUISSANCE PARER ET INCLINER 1

REF. NO.	PART NO. N° PIECES	DESCRIPTION DESCRIPTION	6JD8	6JE8				REMARKS REMARQUES
28	69J–43845–00	SCREW, MANUAL RELEASE VIS	1	1				
29	6H1–43875–00	RING, SNAP RESSORT	1	1				
30	69J–4381C–00	FILTER 3 FILTRE 3	2	2				
31	69J–43899–01	PLATE STOPPER PLAQUETTE	2	2				
32	69J–4389J–00	O-RING JOINT TORIQUE	2	2				
33	69J–43830–01	GEAR PUMP ASSY POMPE A PIGNON (ENS.)	1	1				
34	93505–32038	.BALL .BILLE	4	4				
35	69J–4381C–00	.FILTER 3 .FILTRE 3	1	1				
36	69J–4389J–00	.O-RING .JOINT TORIQUE	2	2				
37	93503–16003	.BALL .BILLES	2	2				
38	6CJ–4384M–00	.PISTON, SHUTTLE 2 .PISTON 2	1	1				
39	69A–4384F–00	.SEAL, MAIN VALVE .JOINT	2	2				
40	99002–03600	.CIRCLIP .CIRCLIP	2	2				
41	69J–43894–00	.SPRING, SHUTTLE RETURN .RESSORT	2	2				
42	6CJ–43841–00	.PISTON, SHUTTLE .PISTON	1	1				
43	6H1–43883–00	.O-RING .JOINT TORIQUE	1	1				
44	60V–4386A–00	.PIN, ABSORBER VALVE .GOUPILLE, SOUPAPE	2	2				
45	69J–43853–00	.SPRING, MAIN VALVE .RESSORT	2	2				
46	6CJ–43893–00	.WASHER .RONDELLE	2	2				
47	93501–08001	.BALL .BILLE	2	2				
48	93210–08391	.O-RING .JOINT TORIQUE	1	1				
49	69J–43851–00	.SEAT, RELIEF VALVE .SIEGE	1	1				
50	63P–43844–20	.PIN, VALVE SUPPORT .GOUPILLE	1	1				
51	93210–064A5	.O-RING .JOINT TORIQUE	1	1				
52	69J–43855–00	.SPRING, UP RELIEF .RESSORT	1	1				
53	6CJ–43843–00	.SCREW, VALVE LOCK .VIS	2	2				
54	6H1–4384G–11	.SEAL, RELIEF VALVE .JOINT	1	1				

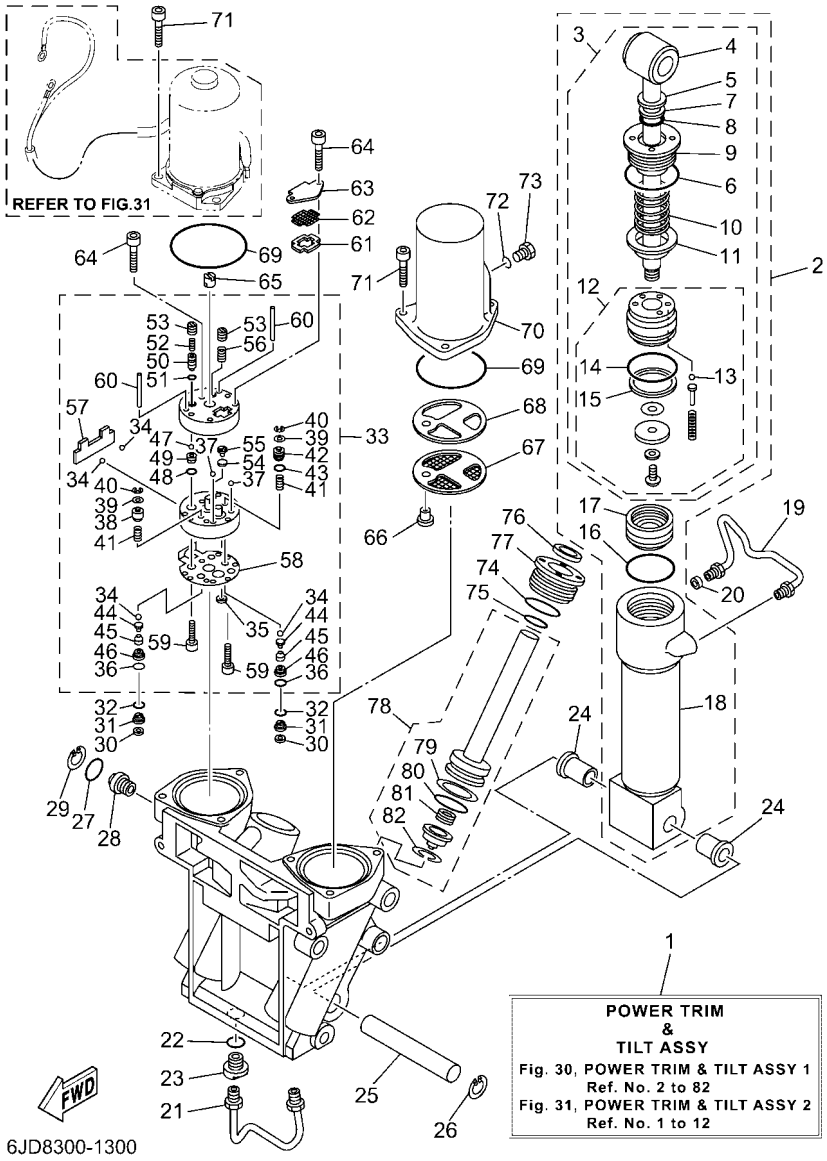

FIG. 30 POWER TRIM & TILT ASSY 1 — PUISSANCE PARER ET INCLINER 1

REF. NO.	PART NO. N° PIECES	DESCRIPTION DESCRIPTION	6JD8	6JE8				REMARKS REMARQUES
55	6H1–43844–10	.PIN, VALVE SUPPORT .GOUPILLE	1	1				
56	6H1–43856–10	.SPRING, DOWN RELIEF .RESSORT	1	1				
57	69J–43854–00	.SPRING, MANUAL RELEASE .RESSORT	1	1				
58	69J–4384G–00	.SEAL, RELIEF VALVE .JOINT	1	1				
59	91318–05025	.BOLT .BOULON	2	2				
60	93604–35236	.PIN, DOWEL .CLAVETTE	2	2				
61	69J–43871–00	RING, BACK UP SEGMENT	1	1				
62	69J–43816–00	FILTER 1 FILTRE 1	1	1				
63	69J–4381J–00	PLATE PLAQUE	1	1				
64	91318–05040	BOLT BOULON	3	3				
65	69J–43831–00	CONNECTOR, SHAFT RACCORD	1	1				
66	69J–4388H–00	PLUG BOUCHON	1	1				
67	69J–43817–00	FILTER 2 FILTRE 2	1	1				
68	69J–4388F–00	SPACER ENTRETOISE	1	1				
69	93210–66001	O-RING JOINT TORIQUE	2	2				
70	69J–43828–00	BODY, RESERVOIR CORPS	1	1				
71	69J–43888–00	BOLT, SOCKET BOULON	6	6				
72	93210–09165	O-RING JOINT TORIQUE	1	1				
73	6H1–43829–00	PLUG, RESERVOIR BOUCHON	1	1				
74	61A–43861–00	O-RING JOINT TORIQUE	2	2				
75	6D8–43863–00	O-RING JOINT TORIQUE	2	2				
76	63P–43812–20	SEAL, DUST JOINT	2	2				
77	61A–43821–02	SCREW, TRIM CYLINDER END VIS	2	2				
78	69J–43820–01	TRIM PISTON SUB ASSY PARER PISTON AUXILIAIRE (ENS.)	2	2				
79	61A–43874–00	.RING, BACK UP .RESSORT	1	1				
80	61A–43864–00	.O-RING .JOINT TORIQUE	1	1				
81	61A–4384H–10	.SPRING .RESSORT	1	1				

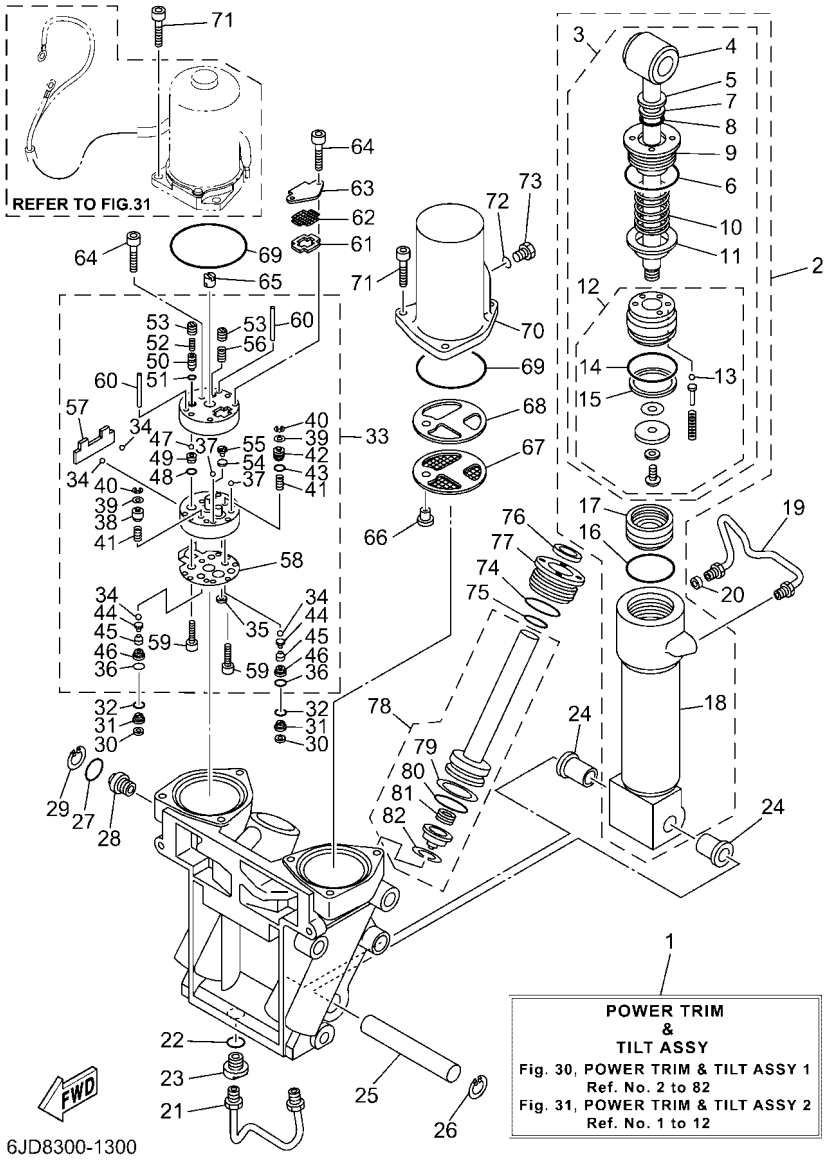

FIG. 30 POWER TRIM & TILT ASSY 1 — PUISSANCE PARER ET INCLINER 1

REF. NO.	PART NO. N° PIECES	DESCRIPTION DESCRIPTION	6JD8	6JE8				REMARKS REMARQUES
82	61A–43875–10	.RING, SNAP .RESSORT	1	1				

FIG. 31 POWER TRIM & TILT ASSY 2 — PUISSANCE PARER ET INCLINER 2

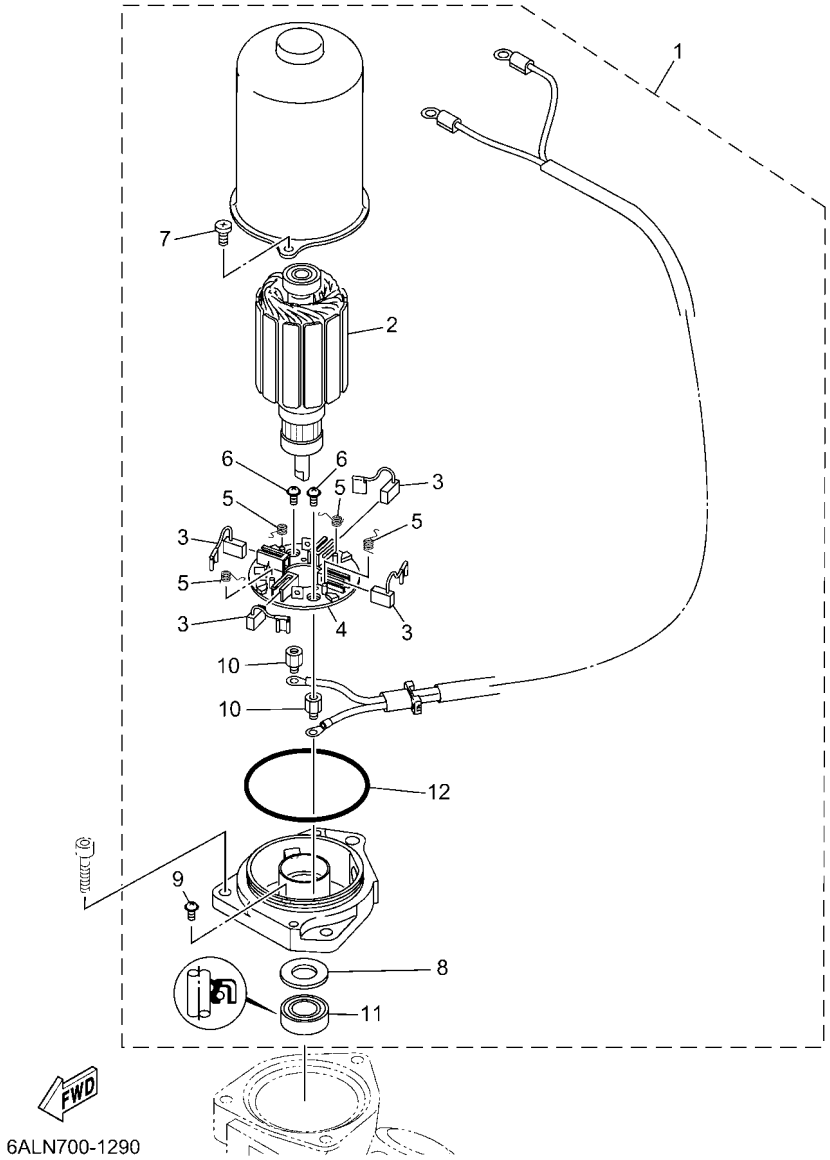

REF. NO.	PART NO. N° PIECES	DESCRIPTION DESCRIPTION	6JD8	6JE8				REMARKS REMARQUES
1	69J–43880–29–8D	MOTOR ASSY MOTEUR (ENS.)	1	1				
2	6ML–43805–00	.ARMATURE ASSY .INDUIT (ENS.)	1	1				
3	6KA–43892–00	.BRUSH 2 .BALAI 2	4	4				
4	6KA–43806–00	.BRUSH HOLDER ASSY .PORTE-BALAI (ENS.)	1	1				
5	6KA–4386K–00	.SPRING, BRUSH .RESSORT, BALAI	4	4				
6	97602–04306	.SCREW, PAN HEAD WITH WASHER .VIS, AVEC RONDELLE	2	2				
7	6KA–43879–00	.SCREW, WITH WASHER .VIS, AVEC RONDELLE	2	2				
8	6KA–4387G–00	.WASHER .RONDELLE	1	1				
9	97602–04308	.SCREW, PAN HEAD WITH WASHER .VIS, AVEC RONDELLE	1	1				
10	6KA–4388F–00	.SPACER .ENTRETOISE	2	2				
11	6KA–43882–00	.OIL SEAL .JOINT SPI	1	1				
12	6KA–43862–00	.O-RING .JOINT TORIQUE	1	1				

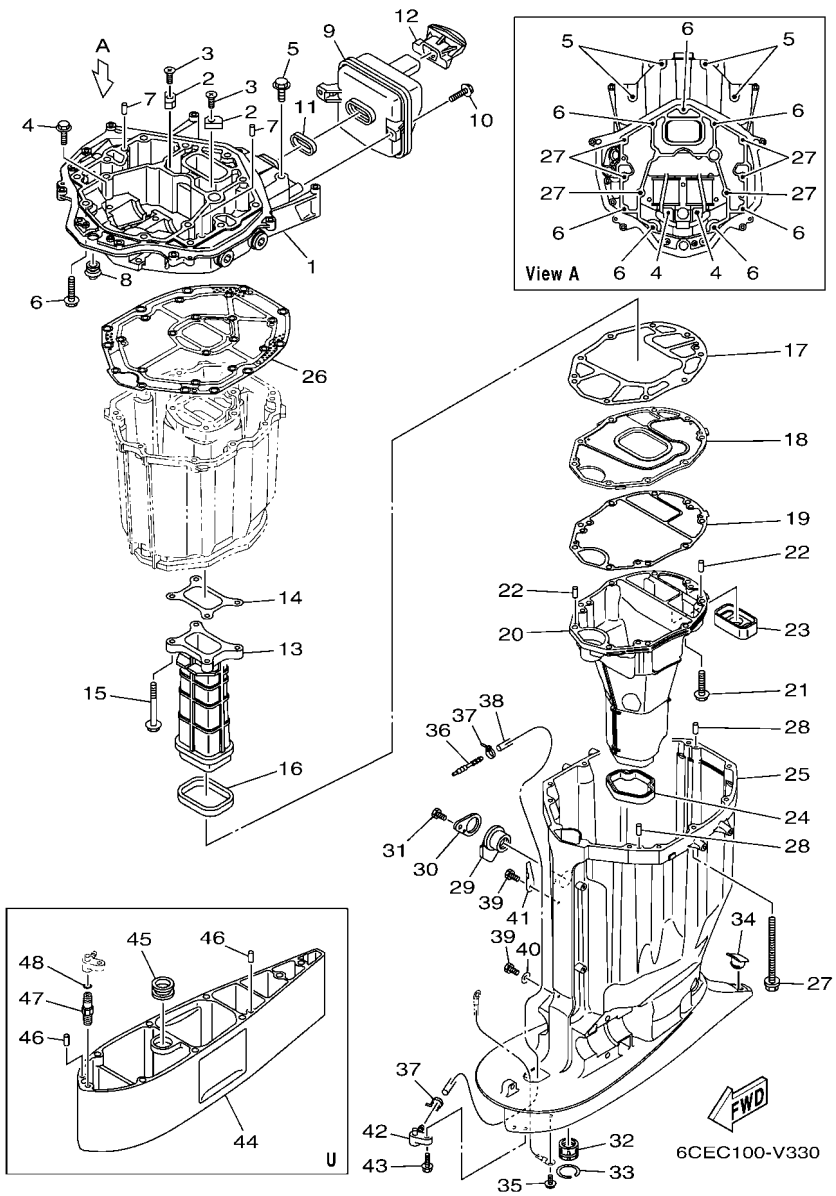

FIG. 32 UPPER CASING FOURREAU

REF. NO.	PART NO. N° PIECES	DESCRIPTION DESCRIPTION	6JD8	6JE8				REMARKS REMARQUES
1	6CE–41137–01	GUIDE, EXHAUST COLLECTEUR D'ECHAPPEMENT	1	1				
2	63P–11325–11	ANODE ANODE	2	2				
3	90151–06M02	SCREW, COUNTERSUNK VIS, TETE NOYEE	2	2				
4	90119–08182	BOLT, WITH WASHER BOULON, AVEC RONDELLE	2	2				
5	97E75–10545	BOLT, HEXAGON W/W DEEP RECESS VIS HEXAGONAL AVC RONDELLE	4	4				
6	97E75–10535	BOLT, HEXAGON W/W DEEP RECESS VIS HEXAGONAL AVC RONDELLE	7	7				
7	93608–16M16	PIN, DOWEL AXE	2	2				
8	6E5–42724–01	GROMMET PASSE-FIL	1	1				
9	6CB–14750–A0	SILENCER ASSY SILENCIEUX	1	1				
10	95D95–06020	BOLT, FLANGE DEEP RECESS BOULON FIXATION	2	2				
11	6CB–14755–01	GASKET, SILENCER JOINT, SILENCIEUX	1	1				
12	6CB–42769–02	SEAL, RUBBER BOURRELET, CAOUTCHOUC	1	1				
13	6CB–41132–01	MANIFOLD, EXHAUST PIPE D'ECHAPPEMENT	1	1				
14	6CB–41134–00	GASKET, EXHAUST MANIFOLD 2 JOINT, PIPE D'ECHAPPEMENT 2	1	1				
15	97E75–08560	BOLT, HEXAGON W/W DEEP RECESS VIS HEXAGONAL AVC RONDELLE	4	4				
16	6CB–41138–00	SEAL, EXT. 1 JOINT DE GROUPE 1	1	1				
17	6CB–41135–00	GASKET, EXHAUST MANIFOLD JOINT, PIPE D'ECHAPPEMENT	1	1				
18	6KA–45181–00	PLATE PLAQUETTE	1	1				
19	6CE–41136–00	GASKET, EXHAUST MANIFOLD 4 JOINT, PIPE D'ECHAPPEMENT 4	1	1				
20	6KA–14711–00	MUFFLER 1 POT D'ECHAPPEMENT 1	1	1				
21	97E75–08535	BOLT, HEXAGON W/W DEEP RECESS VIS HEXAGONAL AVC RONDELLE	9	9				
22	93606–19M23	PIN, DOWEL GOUPILLE	2	2				
23	6CE–45127–00	SEAL JOINT	1	1				
24	6CE–45123–00	GASKET, MUFFLER JOINT, POT DE DETENTE	1	1				
25	6CE–45111–01–8D	CASING, UPPER FOURREAU	1	1				
26	6CB–45113–10	GASKET, UPPER CASING JOINT, TUBE D'ARBRE	1	1				
27	90119–10007	BOLT, WITH WASHER BOULON, AVEC RONDELLE	6	6				

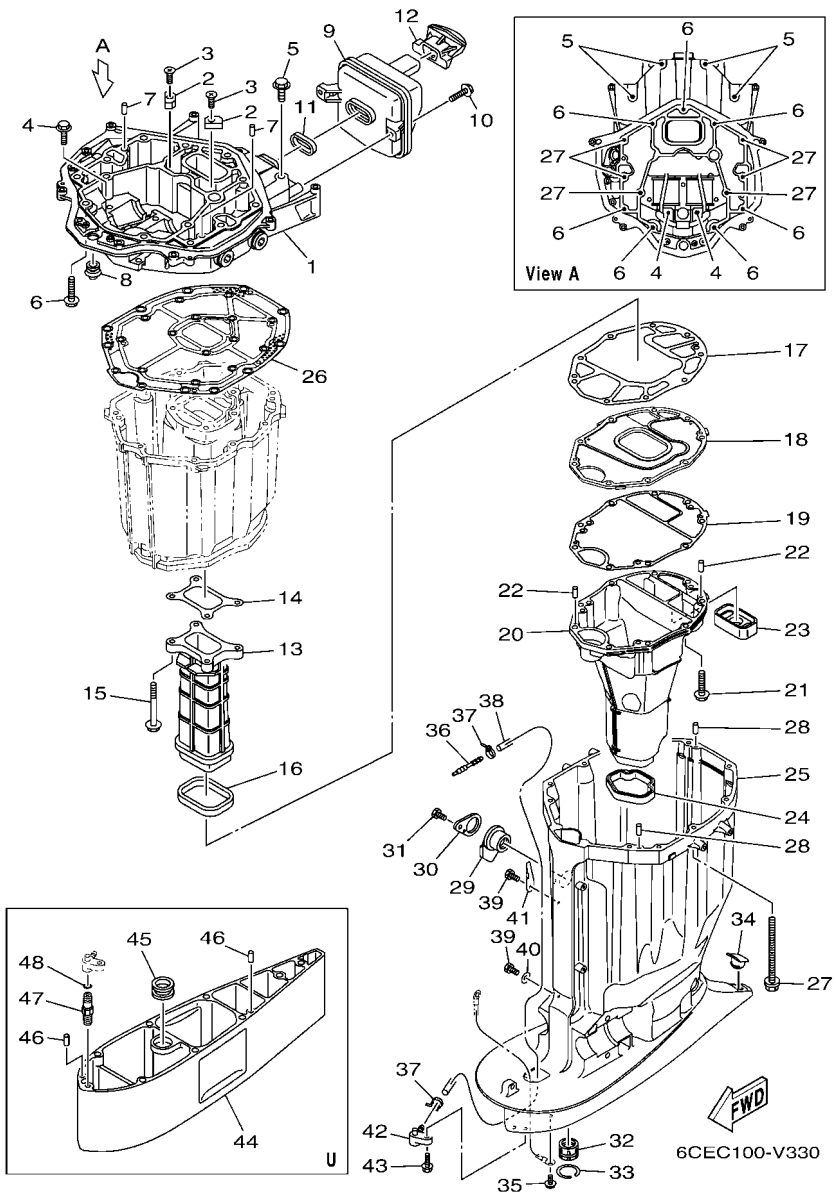

FIG. 32 UPPER CASING FOURREAU

REF. NO.	PART NO. N° PIECES	DESCRIPTION DESCRIPTION	6JD8	6JE8				REMARKS REMARQUES
28	93608–16M16	PIN, DOWEL AXE	2	2				
29	6BB–15316–01	DAMPER 1 AMORTISSEUR 1	1	1				
30	6BB–45152–01	COVER, UPPER CASING 2 CAPUCHON FOURREAU	1	1				
31	97D95–06012	BOLT, HEXAGON DEEP RECESS VIS HEXAGONAL	1	1				
32	69J–45318–01	BUSHING, DRIVE SHAFT DOUILLE, ARBRE MOTEUR	1	1				
33	93420–36M01	CIRCLIP CIRCLIP, TYPE S	1	1				
34	61A–45155–01	CAP CAPUCHON	1	1				
35	95D95–06010	BOLT, FLANGE DEEP RECESS BOULON FIXATION	1	1				
36	6E5–83558–00	END, NIPPLE RACCORD DE NIPPLE	1	1				
37	90465–11M10	CLAMP BRIDE	2	2				
38	90445–07032	HOSE (L1920) DURITE (L1920)	1	1				
39	97D95–06010	BOLT, HEXAGON DEEP RECESS VIS HEXAGONAL	2	2				
40	90201–06M02	WASHER, PLATE RONDELLE, PLATE	1	1				
41	90462–10061	CLAMP BRIDE	1	1				
42	63P–45379–00	NIPPLE, HOSE RACCORD D'ESSENCE	1	1				
43	90119–06287	BOLT, WITH WASHER BOULON, AVEC RONDELLE	1	1				
44	6CE–45211–10–8D	EXTENSION EXTENSION	1	1				U(30.3") U(30.3")
45	6AW–44366–01	DAMPER, WATER SEAL 2 JOINT, TUBE D'EAU 2	1	1				U(30.3") U(30.3")
46	93608–16M16	PIN, DOWEL AXE	2	2				U(30.3") U(30.3")
47	63P–45378–00	NIPPLE, HOSE RACCORD, TUYAU	1	1				U(30.3") U(30.3")
48	93210–07003	O-RING JOINT TORIQUE	1	1				U(30.3") U(30.3")

FIG. 33 OIL PAN — VENTILATEUR D'HUILE

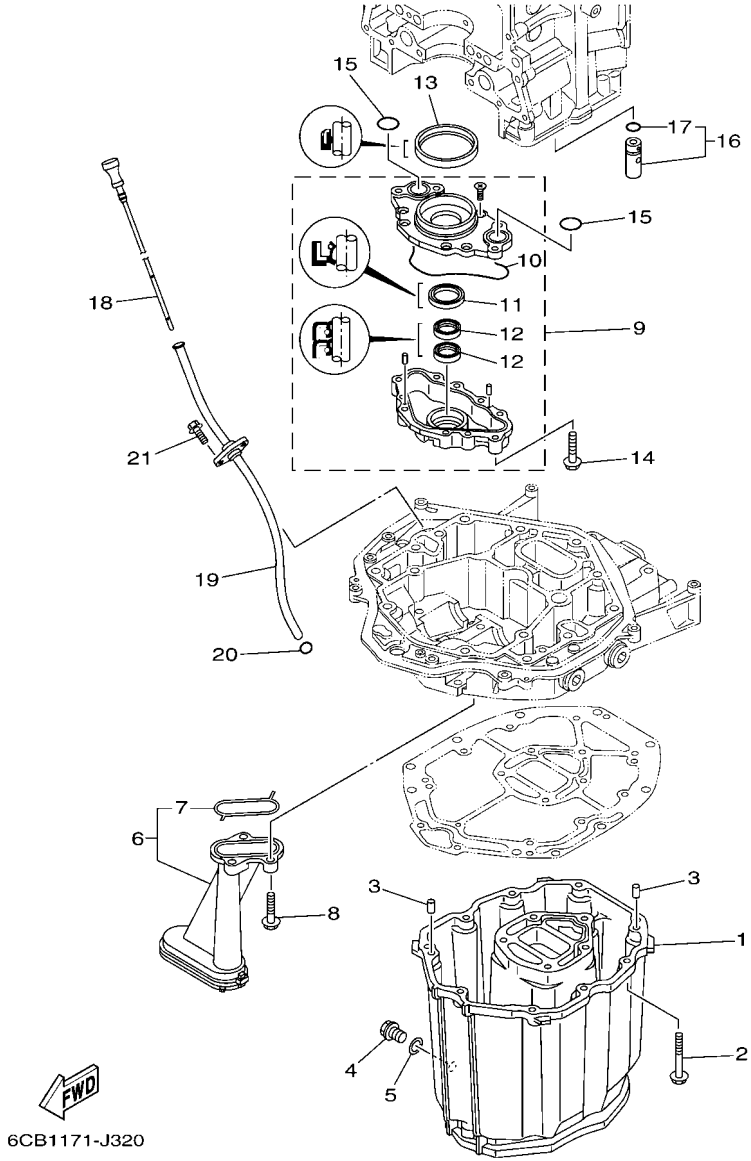

REF. NO.	PART NO. N° PIECES	DESCRIPTION DESCRIPTION	6JD8	6JE8				REMARKS REMARQUES
1	6CB–15311–01	OIL PAN VENTILATEUR D'HUILE	1	1				
2	97E75–08535	BOLT, HEXAGON W/W DEEP RECESS VIS HEXAGONAL AVC RONDELLE	10	10				
3	93608–16M16	PIN, DOWEL AXE	2	2				
4	90340–14M06	PLUG, STRAIGHT SCREW PLOT, FILETE DROIT	1	1				
5	90430–14M09	GASKET JOINT	1	1				
6	6CB–13411–00	STRAINER, OIL FILTRE, HUILE	1	1				
7	6AW–13415–00	.SEAL, OIL STRAINER .JOINT, FILTRE A HUILE	1	1				
8	95812–06025	BOLT, FLANGE BOULON	3	3				
9	6CB–13300–00	OIL PUMP ASSY POMPE A HUILE COMPLETE	1	1				
10	6CB–13329–00	.GASKET, PUMP COVER .JOINT, COUVERCLE DE POMPE	1	1				
11	6AW–13119–00	.OIL SEAL .JOINT SPY	1	1				
12	69J–13631–00	.OIL SEAL .JOINT SPY	2	2				
13	6CB–11355–00	SEAL, CYLINDER 1 JOINT, SPY CYLINDRE	1	1				
14	95D75–06040	BOLT, FLANGE DEEP RECESS BOULON FIXATION	4	4				
15	93210–26658	O-RING JOINT TORIQUE	2	2				
16	6CB–13490–00	RELIEF VALVE ASSY SOUPAPE DE SECURITE COMPLET	1	1				
17	6CB–13473–00	.O-RING .JOINT TORIQUE	1	1				
18	6CB–15362–00	PLUG, OIL LEVEL PLOT, NIVEAU D'HUILE	1	1				
19	6CB–15377–00	GUIDE, INLET GUIDE D'ADMISSION	1	1				
20	93210–19MJ3	O-RING JOINT TORIQUE	1	1				
21	95D95–06016	BOLT, FLANGE DEEP RECESS BOULON FIXATION	2	2				

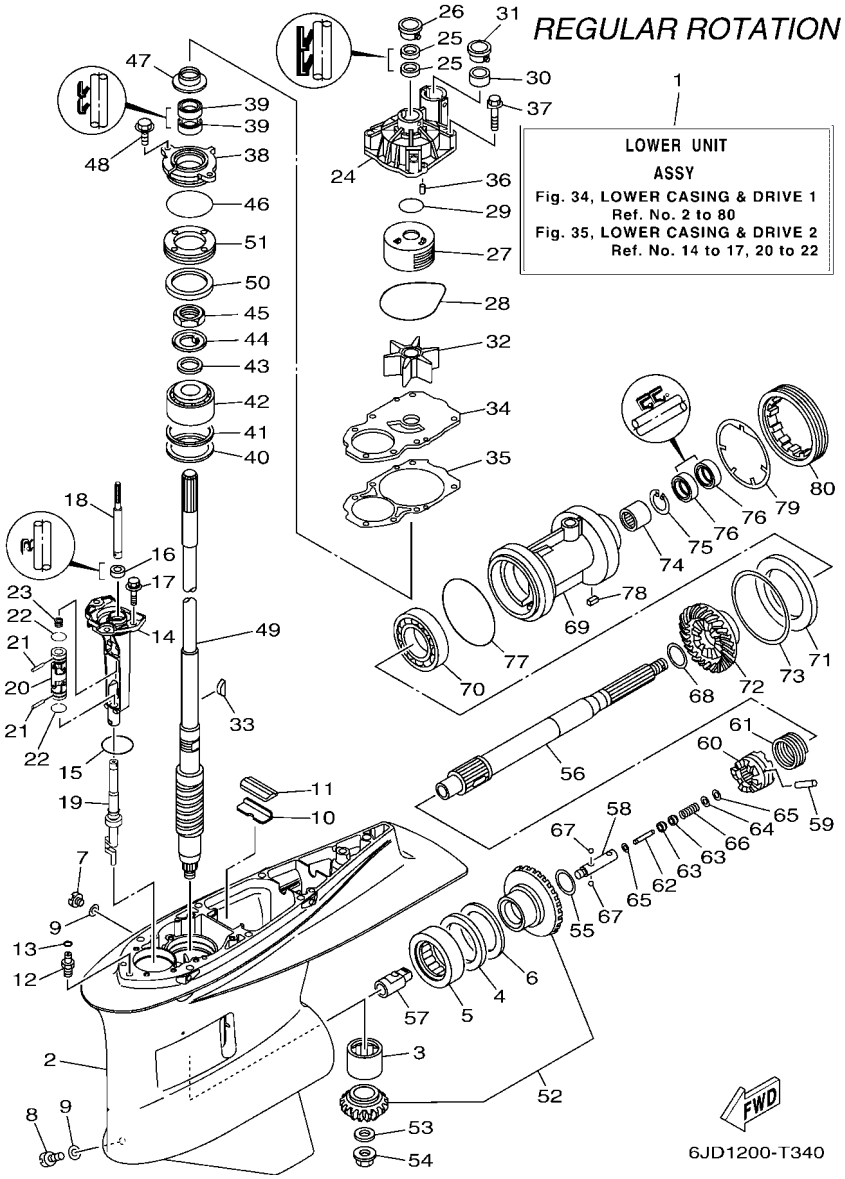

FIG. 34 LOWER CASING & DRIVE 1 — BOITIER D'HELICE TRANSMISSION1

REF. NO.	PART NO. N° PIECES	DESCRIPTION DESCRIPTION	6JD8	6JE8				REMARKS REMARQUES
1	6JD–45300–01–8D	LOWER UNIT ASSY UNITE INFERIEURE (ENS.)	1					X(25.3"),RH X(25.3"),RH
	6JD–45300–11–8D	LOWER UNIT ASSY UNITE INFERIEURE (ENS.)	1					U(30.3"),RH U(30.3"),RH
2	6JD–45301–00–8D	CASING, LOWER BEQUILLE	1					
3	93311–93590	BEARING ROULEMENT	1					
4	93340–67011	BEARING CERVEAUX DE DIRECTION	1					
5	93390–00031	BEARING ROULEMENT	1					
6	6AW–45567–00	SHIM (T:2.00MM) CALE (T:2.00MM)	1					UR UR
	6AW–45567–10	SHIM (T:2.03MM) CALE (T:2.03MM)	1					UR UR
	6AW–45567–20	SHIM (T:2.06MM) CALE (T:2.06MM)	1					UR UR
	6AW–45567–30	SHIM (T:2.09MM) CALE (T:2.09MM)	1					UR UR
	6AW–45567–40	SHIM (T:2.12MM) CALE (T:2.12MM)	1					UR UR
	6AW–45567–50	SHIM (T:2.15MM) CALE (T:2.15MM)	1					UR UR
7	90340–08002	PLUG, STRAIGHT SCREW PLOT, FILETE DROIT	1					
8	688–45341–10	PLUG, DRAIN BOUCHON DE VIDANGE	1					
9	90430–08003	GASKET JOINT	2					
10	61A–45376–00	GUIDE, SEAL DAMPER BUTEE, JOINT CAOUTCHOUC	1					
11	6JD–45375–00	DAMPER, SEAL BOURRELET, CAOUTCHOUC	1					
12	63P–45378–00	NIPPLE, HOSE RACCORD, TUYAU	1					
13	93210–07003	O-RING JOINT TORIQUE	1					
14	6JD–45321–00	PLATE PLAQUETTE	1					
15	93210–58144	O-RING JOINT TORIQUE	1					
16	93101–12M70	OIL SEAL JOINT SPY	1					
17	90119–08180	BOLT, WITH WASHER BOULON, AVEC RONDELLE	3					
18	6JD–44153–00	ROD, SHIFT 3 TIGE D'EMBRAYAGE 3	1					X(25.3") X(25.3")
	6JD–44153–10	ROD, SHIFT 3 TIGE D'EMBRAYAGE 3	1					U(30.3") U(30.3")
19	6JD–44150–00	SHIFT CAM ASSY CAME D'INVERSION	1					
20	6JD–45860–00	UNIVERSAL JOINT ASSY JOINT	1					

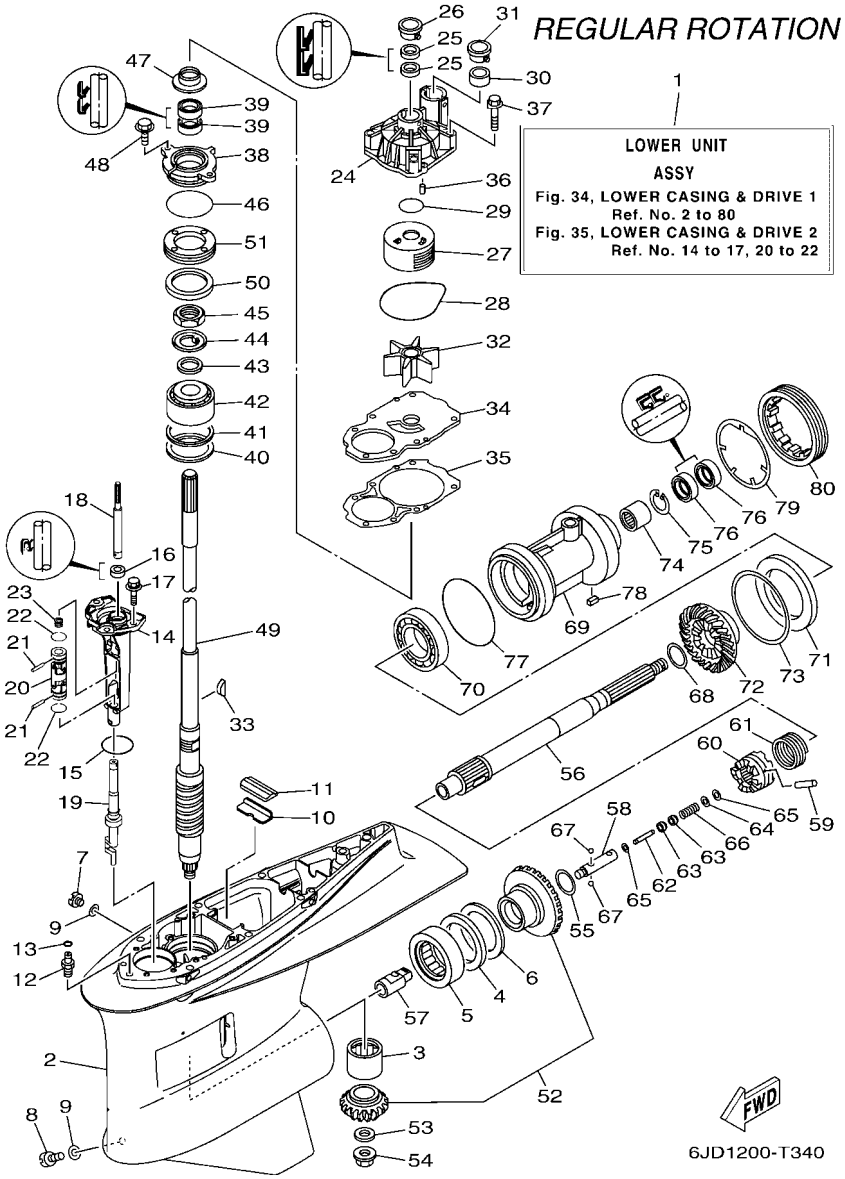

FIG. 34 LOWER CASING & DRIVE 1 — BOITIER D'HELICE TRANSMISSION1

REF. NO.	PART NO. N° PIECES	DESCRIPTION DESCRIPTION	6JD8	6JE8				REMARKS REMARQUES
21	6JD–45524–00	PIN GOUPILLE	2					
22	6JD–45319–00	CLIP JONC	2					
23	90501–127J4	SPRING, COMPRESSION RESSORT, COMPRESSION	1					
24	6CE–44311–01	HOUSING, WATER PUMP CORPS, POMPE A EAU	1					
25	93104–22M07	OIL SEAL JOINT SPY	2					
26	6AW–44312–00	COVER, WATER PUMP HOUSING COUVERCLE	1					
27	6JD–44322–00	INSERT, CARTRIDGE CUVETTE	1					
28	93210–94003	O-RING JOINT TORIQUE	1					
29	93210–37160	O-RING JOINT TORIQUE	1					
30	6AW–44365–01	DAMPER, WATER SEAL 1 JOINT, TUBE D'EAU 1	1					
31	6AW–44312–00	COVER, WATER PUMP HOUSING COUVERCLE	1					
32	6CE–44352–00	IMPELLER TURBINE	1					
33	90280–04002	KEY, WOODRUFF CLAVETTE, DEMI-LUNE	1					
34	6JD–44323–00	OUTER PLATE, CARTRIDGE PLAQUE EXTERIEURE	1					
35	6JD–44315–00	GASKET, WATER PUMP JOINT, POMPE A EAU	1					
36	93606–12019	PIN, DOWEL GOUPILLE	2					
37	90119–08191	BOLT, WITH WASHER BOULON, AVEC RONDELLE	4					
38	6AW–45335–00–CA	HOUSING, OIL SEAL LOGEMENT DE JOINT SPY	1					
39	93101–28019	OIL SEAL JOINT SPY	2					
40	90201–68008	WASHER, PLATE RONDELLE, PLATE	1					
41	6AW–45587–00	SHIM (T:0.10MM) CALE (T:0.10MM)	1					UR UR
	6AW–45587–10	SHIM (T:0.12MM) CALE (T:0.12MM)	1					UR UR
	6AW–45587–20	SHIM (T:0.15MM) CALE (T:0.15MM)	1					UR UR
	6AW–45587–30	SHIM (T:0.18MM) CALE (T:0.18MM)	1					UR UR
	6AW–45587–40	SHIM (T:0.30MM) CALE (T:0.30MM)	1					UR UR
	6AW–45587–50	SHIM (T:0.40MM) CALE (T:0.40MM)	1					UR UR
	6AW–45587–60	SHIM (T:0.50MM) CALE (T:0.50MM)	1					UR UR

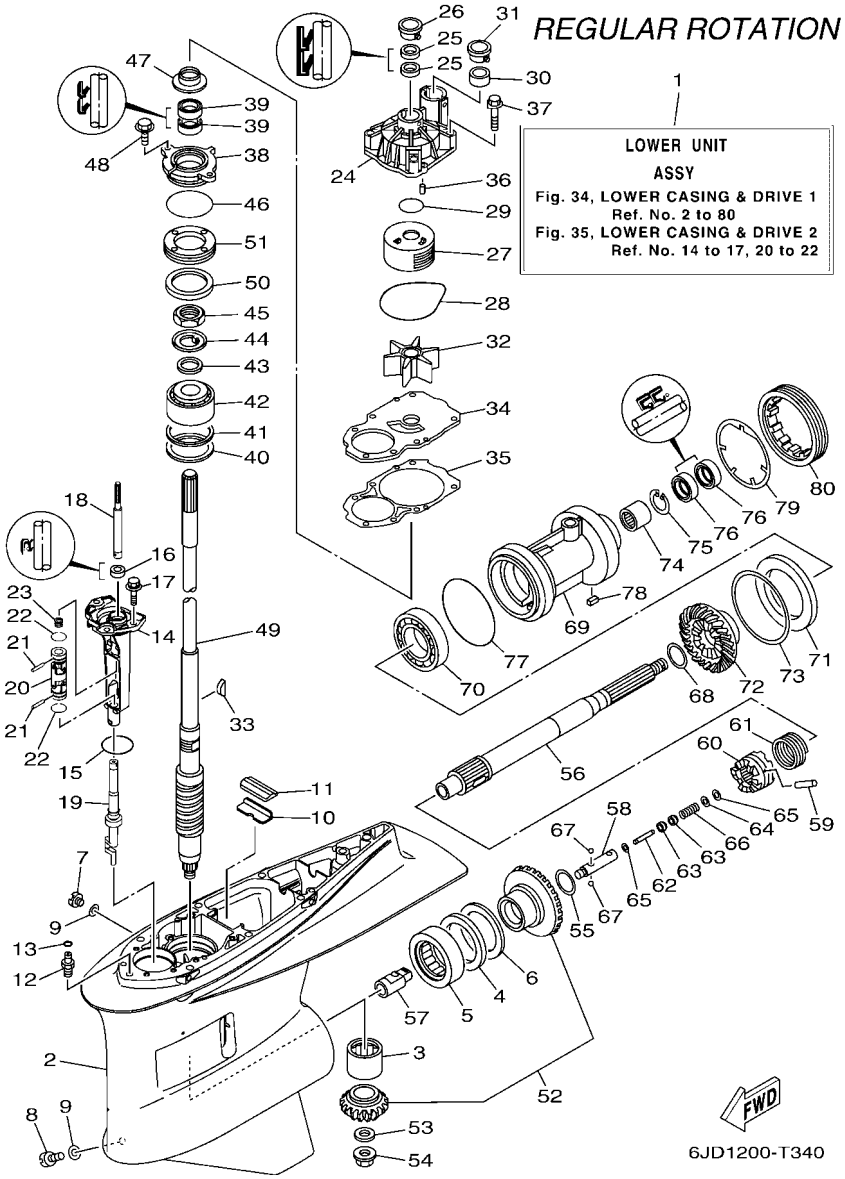

FIG. 34 LOWER CASING & DRIVE 1 — BOITIER D'HELICE TRANSMISSION1

REF. NO.	PART NO. N° PIECES	DESCRIPTION DESCRIPTION	6JD8	6JE8				REMARKS REMARQUES
42	93399–99962	BEARING ROULEMENT	1					
43	90201–301U7	WASHER, PLATE RONDELLE, PLATE	1					
44	90214–30003	WASHER, CLAW RONDELLE, A GRIFFES	1					
45	90170–30M18	NUT ECROU	1					
46	93210–69MG6	O-RING JOINT TORIQUE	1					
47	6KA–45344–00	COVER, OIL SEAL FLASQE, JOINT D'HUILE	1					
48	97E95–08520	BOLT, HEXAGON W/W DEEP RECESS VIS HEXAGONAL AVC RONDELLE	2					
49	6JD–45501–00	DRIVE SHAFT COMP. ARBRE MOTEUR COMP.	1					X(25.3") X(25.3")
	6JD–45501–10	DRIVE SHAFT COMP. ARBRE MOTEUR COMP.	1					U(30.3") U(30.3")
50	6T5–45539–00	SPACER 2 ENTRETOISE 2	1					
51	6AW–45244–00	NUT ECROU	1					
52	6JD–45550–00	GEAR SET KIT, PIGNON	1					
53	90201–18023	WASHER, PLATE RONDELLE, PLATE	1					
54	90179–18009	NUT ECROU	1					
55	90201–35015	WASHER, PLATE RONDELLE, PLATE	1					
56	6AW–45611–00	SHAFT, PROPELLER ARBRE, HELICE	1					
57	6JD–45641–00	SHIFTER EMBRAYAGE	1					
58	61A–45634–01	SLIDE, SHIFT CONTRE-POUSSOIR	1					
59	6AW–45632–00	PIN, CROSS GOUPILLE DE CRABOT	1					
60	6AW–45631–00	CLUTCH, DOG CRABOT	1					
61	6AW–45633–00	RING, CROSS PIN JONC, GOUPILLE CRABOT	1					
62	6H1–45668–00	SHAFT, FREE 1 AXE 1	1					
63	61A–45635–00	PLUNGER, SHIFT POUSSOIR D'EMBRAYAGE	2					
64	90201–02M00	WASHER, PLATE RONDELLE, PLATE	1					
65	90183–02M03	NUT, SPRING ECROU, RESSORT	2					
66	90501–10M77	SPRING, COMPRESSION RESSORT, COMPRESSION	1					
67	93501–04011	BALL BILLE	2					

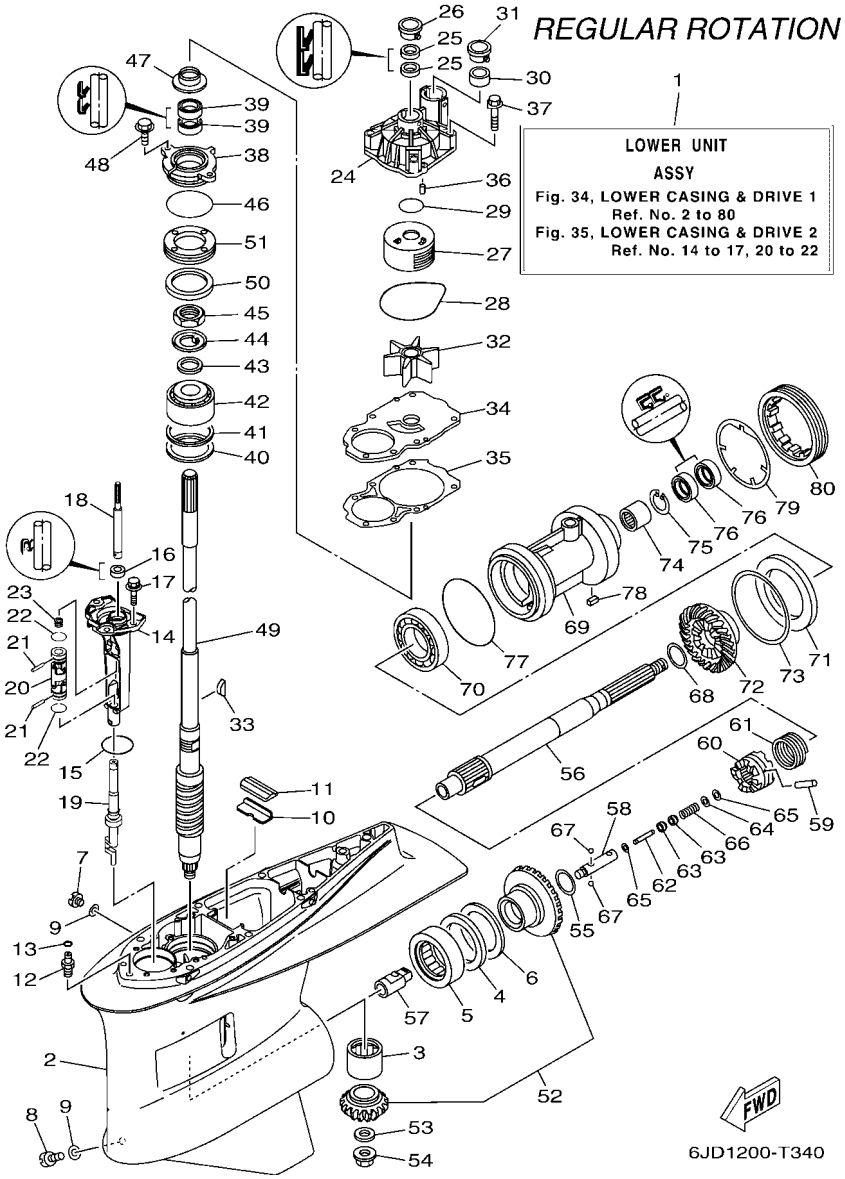

FIG. 34 LOWER CASING & DRIVE 1 — BOITIER D'HELICE TRANSMISSION1

REF. NO.	PART NO. N° PIECES	DESCRIPTION DESCRIPTION	6JD8	6JE8				REMARKS REMARQUES
68	6AW–45612–00	WASHER, THRUST RONDELLE, DE BUTEE	1					
69	6AW–45332–00	HOUSING, BEARING FLASQUE, ROULEMENT	1					
70	93306–21101	BEARING ROULEMENT	1					
71	6AW–45576–00	WASHER, THRUST 2 RONDELLE DE CALAGE 2	1					
72	6AW–45571–00	GEAR 2 (26T) PIGNON 2 (26T)	1					
73	6AW–45577–00	SHIM (T:0.10MM) CALE (T:0.10MM)	1					UR UR
	6AW–45577–10	SHIM (T:0.12MM) CALE (T:0.12MM)	1					UR UR
	6AW–45577–20	SHIM (T:0.15MM) CALE (T:0.15MM)	1					UR UR
	6AW–45577–30	SHIM (T:0.18MM) CALE (T:0.18MM)	1					UR UR
	6AW–45577–40	SHIM (T:0.30MM) CALE (T:0.30MM)	1					UR UR
	6AW–45577–50	SHIM (T:0.40MM) CALE (T:0.40MM)	1					UR UR
	6AW–45577–60	SHIM (T:0.50MM) CALE (T:0.50MM)	1					UR UR
74	93311–63591	BEARING ROULEMENT	1					
75	99009–47500	CIRCLIP CIRCLIP	1					
76	93101–35019	OIL SEAL JOINT SPY	2					
77	93211–10232	O-RING JOINT TORIQUE	1					
78	90282–05008	KEY, STRAIGHT CLAVETTE, DROITE	1					
79	6AW–45383–00	WASHER, CLAW FREIN D'ECROU	1					
80	6AW–45384–00	NUT ECROU	1					

FIG. 35 LOWER CASING & DRIVE 2 — BOITIER D'HELICE TRANSMISSION2

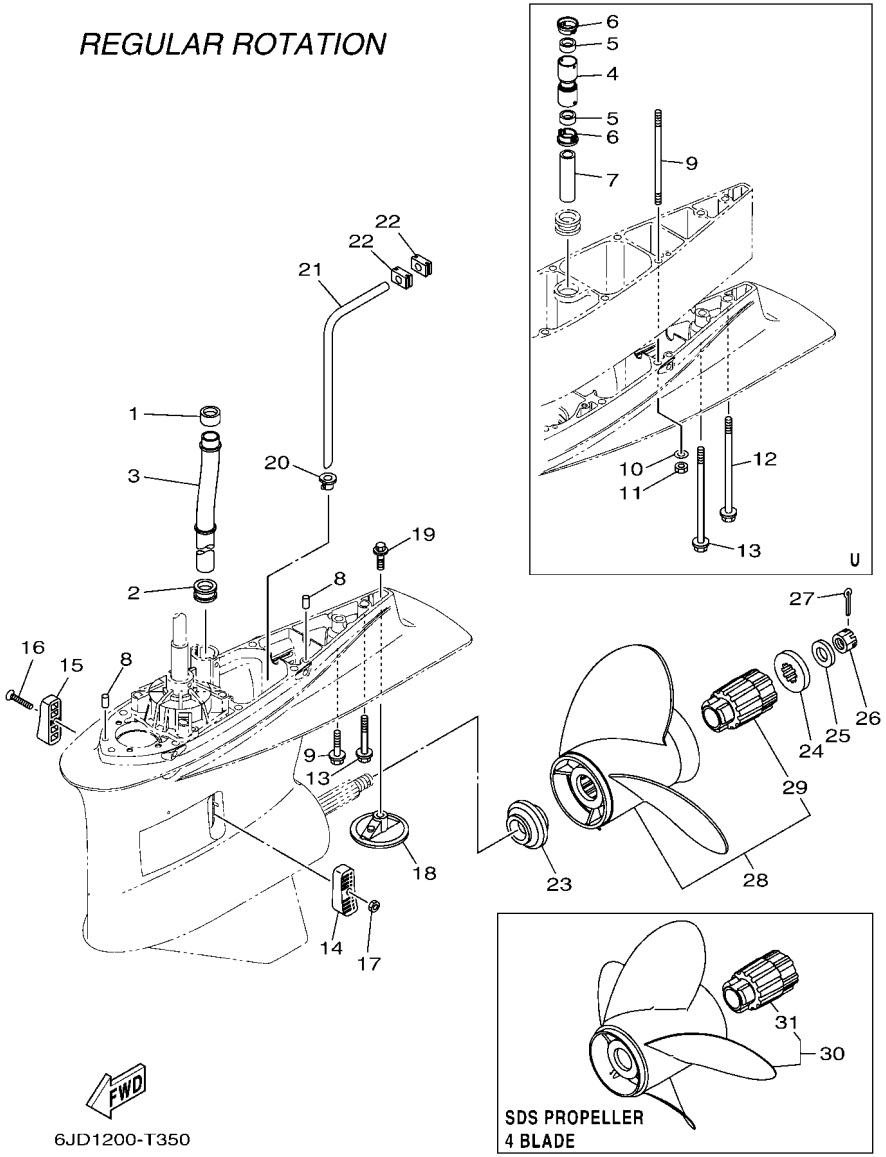

REF. NO.	PART NO. N° PIECES	DESCRIPTION DESCRIPTION	6JD8	6JE8				REMARKS REMARQUES
1	6AW–44365–01	DAMPER, WATER SEAL 1 JOINT, TUBE D'EAU 1	1					
2	6AW–44366–01	DAMPER, WATER SEAL 2 JOINT, TUBE D'EAU 2	1					
3	6CE–44361–00	TUBE, WATER 1 TUBE D'EAU 1	1					
4	6CE–44362–00	TUBE, WATER 2 TUBE D'EAU 2	1					U(30.3") U(30.3")
5	6AW–44365–01	DAMPER, WATER SEAL 1 JOINT, TUBE D'EAU 1	2					U(30.3") U(30.3")
6	6AW–44312–00	COVER, WATER PUMP HOUSING COUVERCLE	2					U(30.3") U(30.3")
7	6AW–44363–00	TUBE, WATER 3 TUBE D'EAU 3	1					U(30.3") U(30.3")
8	93608–16M16	PIN, DOWEL AXE	2					
9	90119–10024	BOLT, WITH WASHER BOULON, AVEC RONDELLE	7					X(25.3") X(25.3")
	90116–10067	BOLT, STUD GOUJON	6					U(30.3") U(30.3")
10	92995–10600	WASHER RONDELLE	6					U(30.3") U(30.3")
11	95380–10600	NUT ECROU	6					U(30.3") U(30.3")
12	90119–10008	BOLT, WITH WASHER BOULON, AVEC RONDELLE	1					U(30.3") U(30.3")
13	97E75–10570	BOLT, HEXAGON W/W DEEP RECESS VIS HEXAGONAL AVC RONDELLE	1					X(25.3") X(25.3")
	90119–10009	BOLT, WITH WASHER BOULON, AVEC RONDELLE	1					U(30.3") U(30.3")
14	6AW–45214–00	COVER, WATER INLET 1 GRILLE, ENTREE D'EAU 1	1					
15	6AW–45215–00	COVER, WATER INLET 2 GRILLE, ENTREE D'EAU 2	1					
16	90152–05003	SCREW, COUNTERSUNK VIS, TETE NOYEE	1					
17	90185–05002	NUT, NYLON ECROU,AUTO-BLOQUANT	1					
18	6CE–45373–00	ANODE ANODE	1					
19	90105–10M00	BOLT, FLANGE BOULON, A COLLERETTE	1					
20	6AW–44367–00	DAMPER, WATER SEAL 3 JOINT TUBE D'EAU 3	1					
21	6JD–44362–00	TUBE, WATER 2 TUBE D'EAU 2	1					
22	6AW–44376–01	GROMMET, WATER TUBE 2 PASSE-FIL, TUBE D'EAU 2	2					
23	6AW–45987–00	SPACER 1 ENTRETOISE 1	1					
24	6AW–45997–00	SPACER 2 ENTRETOISE 2	1					
25	90201–19M01	WASHER, PLATE RONDELLE, PLATE	1					

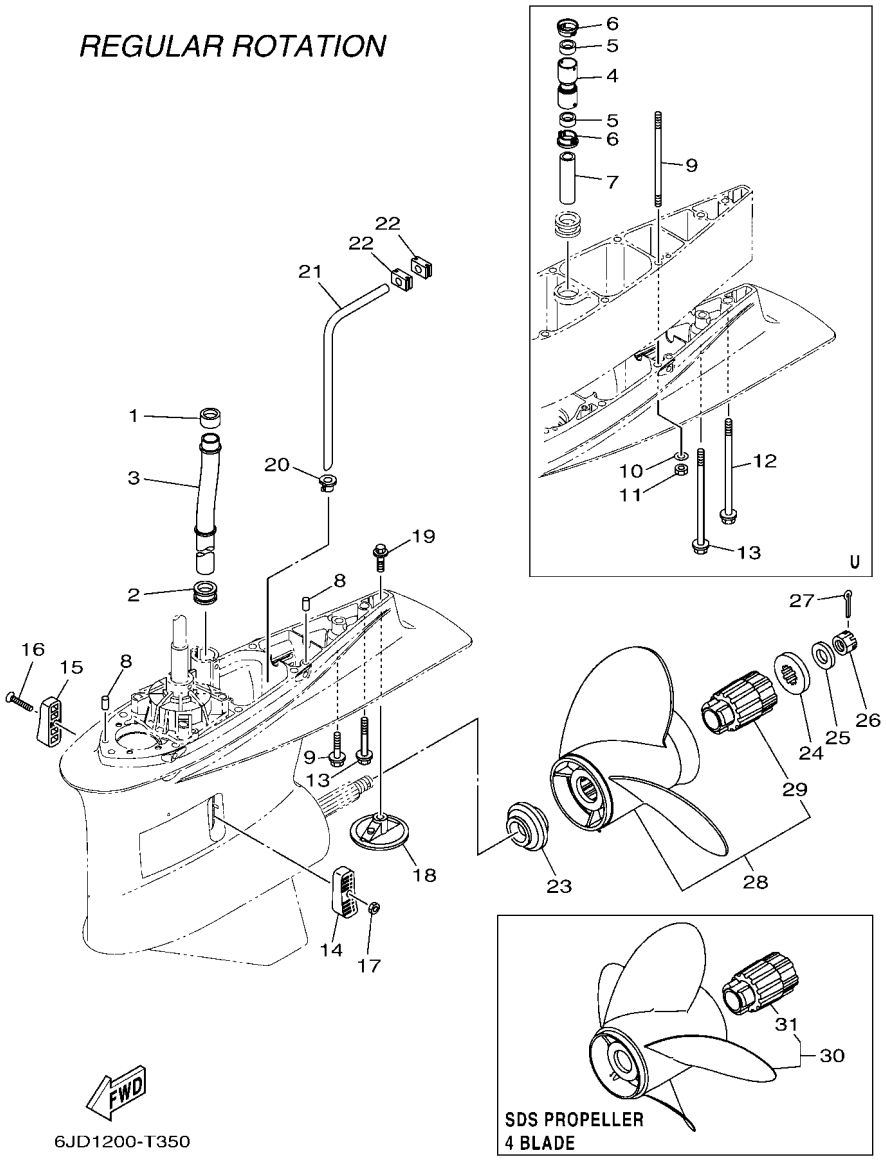

FIG. 35 LOWER CASING & DRIVE 2 — BOITIER D'HELICE TRANSMISSION2

REF. NO.	PART NO. N° PIECES	DESCRIPTION DESCRIPTION	6JD8	6JE8				REMARKS REMARQUES
26	90171–18M04	NUT, CASTLE ECROU, CRENELE	1					
27	91490–40030	PIN. COTTER GOUPILLE	1					
28	6AW–45930–20	PROPELLER (3X16-1/4"X13"-X) HELICE (3X16-1/4"X13"-X)	1					UR SDS 3 BLADE UR SDS 3 BLADE
	6AW–45970–20	PROPELLER (3X16-1/4"X15"-X) HELICE (3X16-1/4"X15"-X)	1					UR SDS 3 BLADE UR SDS 3 BLADE
	6AW–45972–20	PROPELLER (3X16-1/4"X17"-X) HELICE (3X16-1/4"X17"-X)	1					UR SDS 3 BLADE UR SDS 3 BLADE
	6AW–45974–20	PROPELLER (3X15-1/2"X19"-X) HELICE (3X15-1/2"X19"-X)	1					UR SDS 3 BLADE UR SDS 3 BLADE
	6AW–45976–20	PROPELLER (3X15-1/4"X21"-X) HELICE (3X15-1/4"X21"-X)	1					UR SDS 3 BLADE UR SDS 3 BLADE
	6AW–45978–20	PROPELLER (3X15-1/4"X23"-X) HELICE (3X15-1/4"X23"-X)	1					UR SDS 3 BLADE UR SDS 3 BLADE
29	6AW–45C81–10	.DAMPER RUBBER, PROPELLER 1 .AMORTISSEUR HELICE 1	1					
30	6AW–45B70–20	PROPELLER (4X16-1/8"X15"-X) HELICE (4X16-1/8"X15"-X)	1					UR SDS 4 BLADE UR SDS 4 BLADE
	6AW–45B72–20	PROPELLER (4X16-1/8"X17"-X) HELICE (4X16-1/8"X17"-X)	1					UR SDS 4 BLADE UR SDS 4 BLADE
	6AW–45B76–20	PROPELLER (4X15-3/8"X22"-X) HELICE (4X15-3/8"X22"-X)	1					UR SDS 4 BLADE UR SDS 4 BLADE
	6AW–45B74–20	PROPELLER (4X15-3/8"X24"-X) HELICE (4X15-3/8"X24"-X)	1					UR SDS 4 BLADE UR SDS 4 BLADE
31	6AW–45C81–10	.DAMPER RUBBER, PROPELLER 1 .AMORTISSEUR HELICE 1	1					

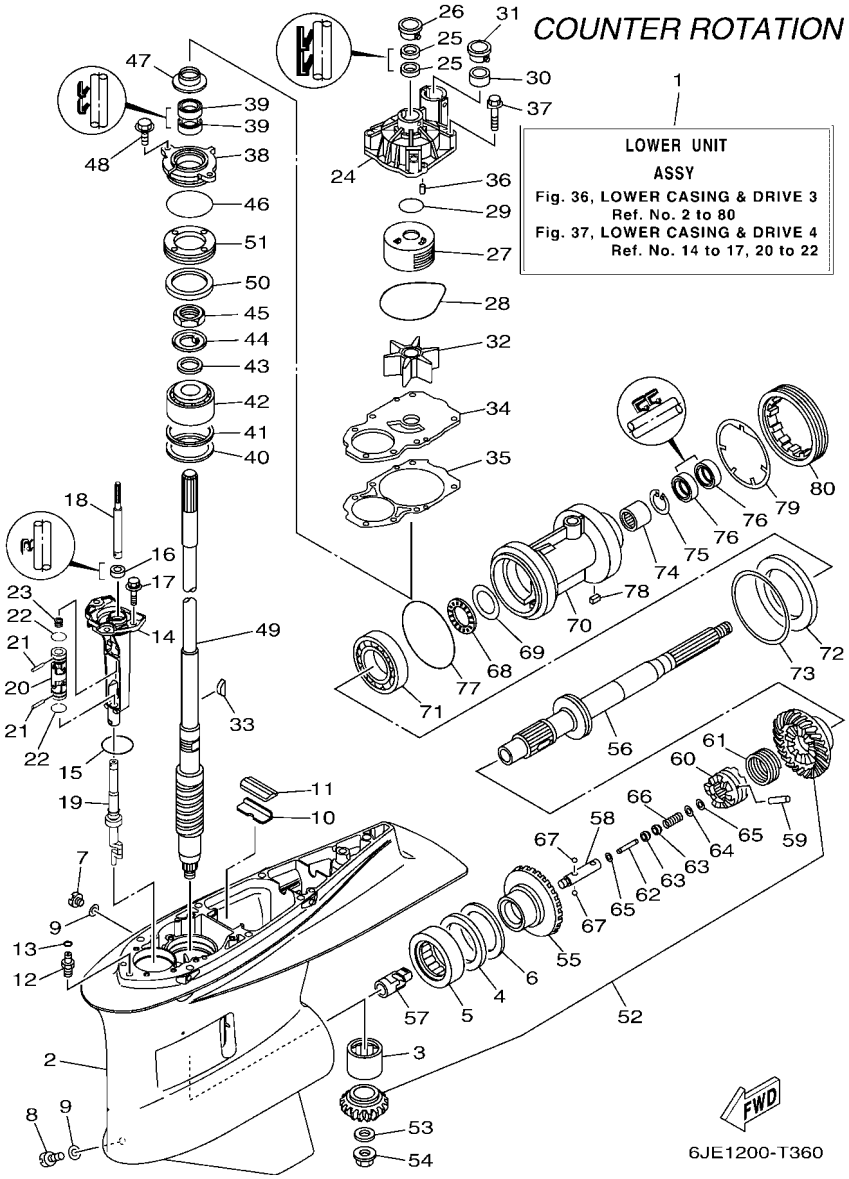

FIG. 36 LOWER CASING & DRIVE 3 — BOITIER D'HELICE TRANSMISSION3

REF. NO.	PART NO. N° PIECES	DESCRIPTION DESCRIPTION	6JD8	6JE8				REMARKS REMARQUES
1	6JE–45300–01–8D	LOWER UNIT ASSY UNITE INFERIEURE (ENS.)		1				X(25.3"),LH X(25.3"),LH
	6JE–45300–11–8D	LOWER UNIT ASSY UNITE INFERIEURE (ENS.)		1				U(30.3"),LH U(30.3"),LH
2	6JD–45301–00–8D	CASING, LOWER BEQUILLE		1				
3	93311–93590	BEARING ROULEMENT		1				
4	93340–67011	BEARING CERVEAUX DE DIRECTION		1				
5	93390–00031	BEARING ROULEMENT		1				
6	6AW–45567–00	SHIM (T:2.00MM) CALE (T:2.00MM)		1				UR UR
	6AW–45567–10	SHIM (T:2.03MM) CALE (T:2.03MM)		1				UR UR
	6AW–45567–20	SHIM (T:2.06MM) CALE (T:2.06MM)		1				UR UR
	6AW–45567–30	SHIM (T:2.09MM) CALE (T:2.09MM)		1				UR UR
	6AW–45567–40	SHIM (T:2.12MM) CALE (T:2.12MM)		1				UR UR
	6AW–45567–50	SHIM (T:2.15MM) CALE (T:2.15MM)		1				UR UR
7	90340–08002	PLUG, STRAIGHT SCREW PLOT, FILETE DROIT		1				
8	688–45341–10	PLUG, DRAIN BOUCHON DE VIDANGE		1				
9	90430–08003	GASKET JOINT		2				
10	61A–45376–00	GUIDE, SEAL DAMPER BUTEE, JOINT CAOUTCHOUC		1				
11	6JD–45375–00	DAMPER, SEAL BOURRELET, CAOUTCHOUC		1				
12	63P–45378–00	NIPPLE, HOSE RACCORD, TUYAU		1				
13	93210–07003	O-RING JOINT TORIQUE		1				
14	6JD–45321–00	PLATE PLAQUETTE		1				
15	93210–58144	O-RING JOINT TORIQUE		1				
16	93101–12M70	OIL SEAL JOINT SPY		1				
17	90119–08180	BOLT, WITH WASHER BOULON, AVEC RONDELLE		3				
18	6JD–44153–00	ROD, SHIFT 3 TIGE D'EMBRAYAGE 3		1				X(25.3") X(25.3")
	6JD–44153–10	ROD, SHIFT 3 TIGE D'EMBRAYAGE 3		1				U(30.3") U(30.3")
19	6JD–44150–00	SHIFT CAM ASSY CAME D'INVERSION		1				
20	6JD–45860–00	UNIVERSAL JOINT ASSY JOINT		1				

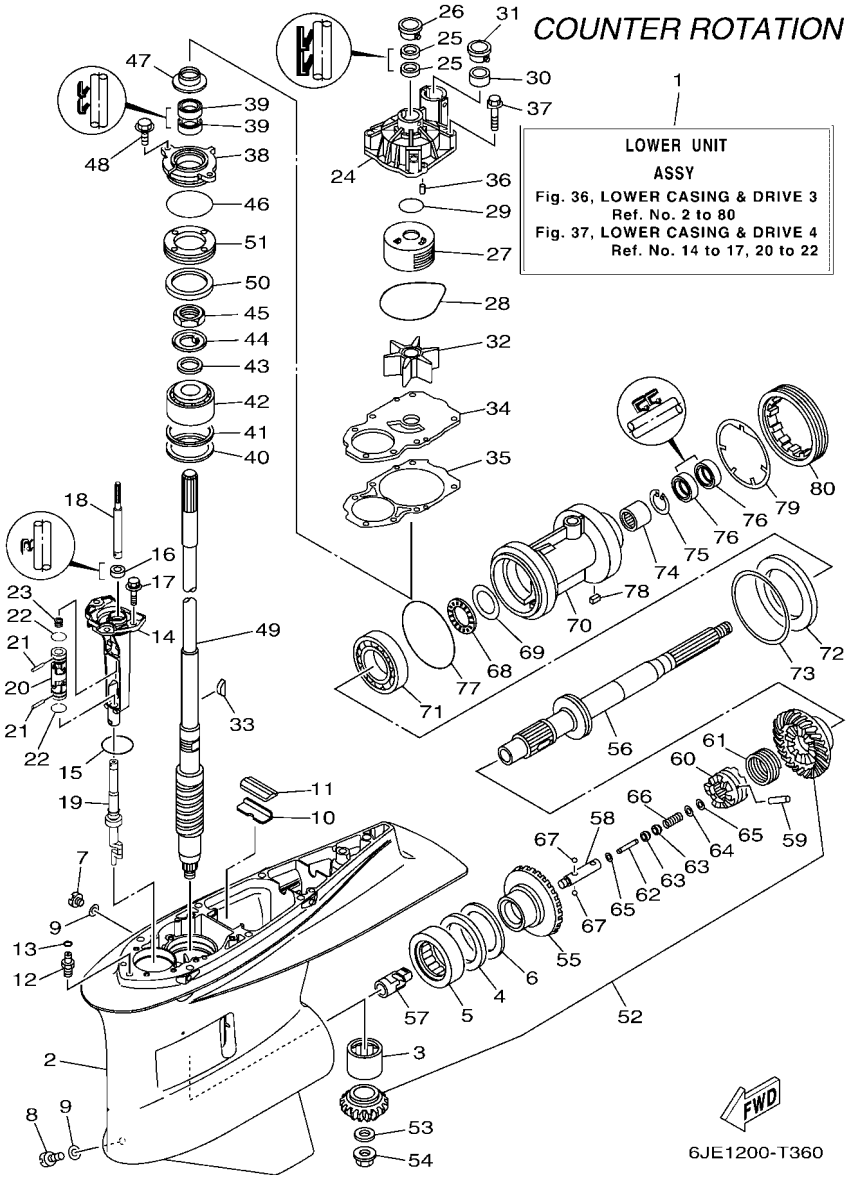

FIG. 36 LOWER CASING & DRIVE 3 — BOITIER D'HELICE TRANSMISSION3

REF. NO.	PART NO. N° PIECES	DESCRIPTION DESCRIPTION	6JD8	6JE8				REMARKS REMARQUES
21	6JD–45524–00	PIN GOUPILLE		2				
22	6JD–45319–00	CLIP JONC		2				
23	90501–127J4	SPRING, COMPRESSION RESSORT, COMPRESSION		1				
24	6CE–44311–01	HOUSING, WATER PUMP CORPS, POMPE A EAU		1				
25	93104–22M07	OIL SEAL JOINT SPY		2				
26	6AW–44312–00	COVER, WATER PUMP HOUSING COUVERCLE		1				
27	6JD–44322–00	INSERT, CARTRIDGE CUVETTE		1				
28	93210–94003	O-RING JOINT TORIQUE		1				
29	93210–37160	O-RING JOINT TORIQUE		1				
30	6AW–44365–01	DAMPER, WATER SEAL 1 JOINT, TUBE D'EAU 1		1				
31	6AW–44312–00	COVER, WATER PUMP HOUSING COUVERCLE		1				
32	6CE–44352–00	IMPELLER TURBINE		1				
33	90280–04002	KEY, WOODRUFF CLAVETTE, DEMI-LUNE		1				
34	6JD–44323–00	OUTER PLATE, CARTRIDGE PLAQUE EXTERIEURE		1				
35	6JD–44315–00	GASKET, WATER PUMP JOINT, POMPE A EAU		1				
36	93606–12019	PIN, DOWEL GOUPILLE		2				
37	90119–08191	BOLT, WITH WASHER BOULON, AVEC RONDELLE		4				
38	6AW–45335–00–CA	HOUSING, OIL SEAL LOGEMENT DE JOINT SPY		1				
39	93101–28019	OIL SEAL JOINT SPY		2				
40	90201–68008	WASHER, PLATE RONDELLE, PLATE		1				
41	6AW–45587–00	SHIM (T:0.10MM) CALE (T:0.10MM)		1				UR UR
	6AW–45587–10	SHIM (T:0.12MM) CALE (T:0.12MM)		1				UR UR
	6AW–45587–20	SHIM (T:0.15MM) CALE (T:0.15MM)		1				UR UR
	6AW–45587–30	SHIM (T:0.18MM) CALE (T:0.18MM)		1				UR UR
	6AW–45587–40	SHIM (T:0.30MM) CALE (T:0.30MM)		1				UR UR
	6AW–45587–50	SHIM (T:0.40MM) CALE (T:0.40MM)		1				UR UR
	6AW–45587–60	SHIM (T:0.50MM) CALE (T:0.50MM)		1				UR UR

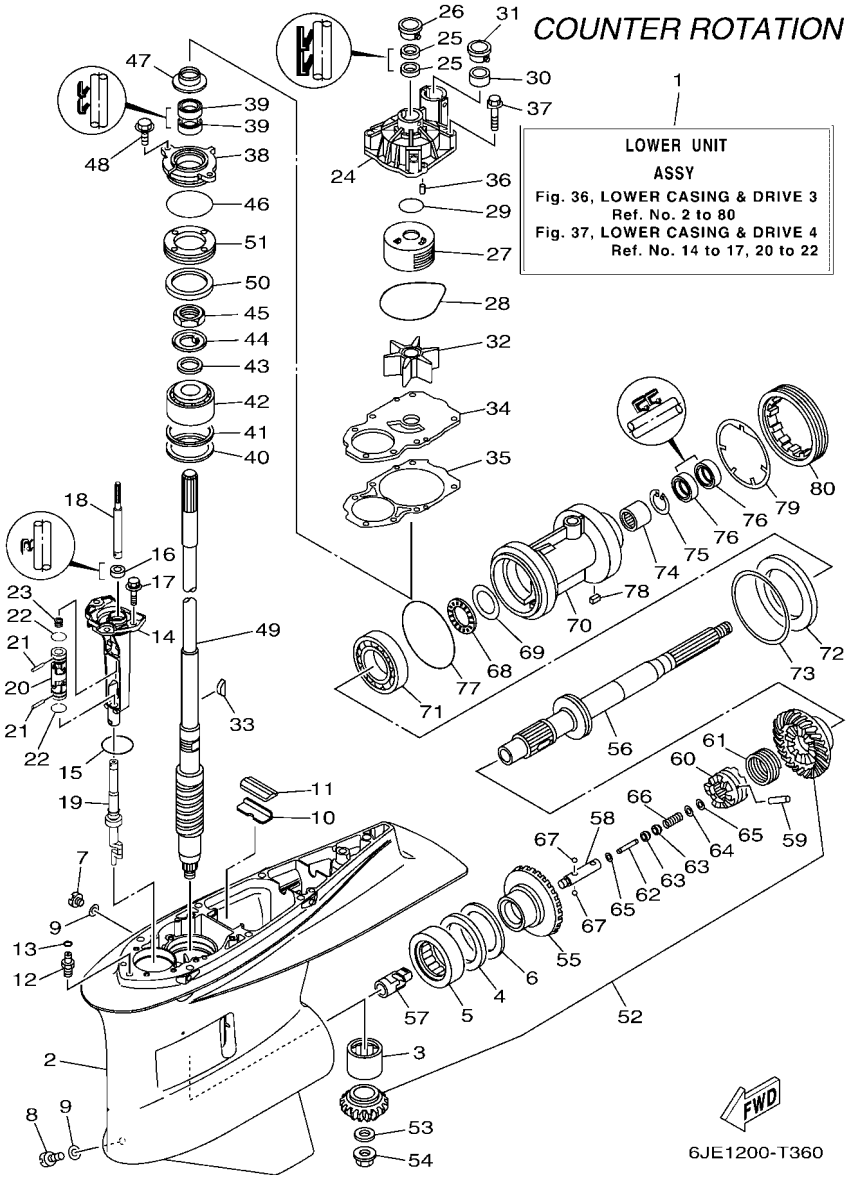

FIG. 36 LOWER CASING & DRIVE 3 — BOITIER D'HELICE TRANSMISSION3

REF. NO.	PART NO. N° PIECES	DESCRIPTION DESCRIPTION	6JD8	6JE8				REMARKS REMARQUES
42	93399–99962	BEARING ROULEMENT		1				
43	90201–301U7	WASHER, PLATE RONDELLE, PLATE		1				
44	90214–30003	WASHER, CLAW RONDELLE, A GRIFFES		1				
45	90170–30M18	NUT ECROU		1				
46	93210–69MG6	O-RING JOINT TORIQUE		1				
47	6KA–45344–00	COVER, OIL SEAL FLASQE, JOINT D'HUILE		1				
48	97E95–08520	BOLT, HEXAGON W/W DEEP RECESS VIS HEXAGONAL AVC RONDELLE		2				
49	6JD–45501–00	DRIVE SHAFT COMP. ARBRE MOTEUR COMP.		1				X(25.3") X(25.3")
	6JD–45501–10	DRIVE SHAFT COMP. ARBRE MOTEUR COMP.		1				U(30.3") U(30.3")
50	6T5–45539–00	SPACER 2 ENTRETOISE 2		1				
51	6AW–45244–00	NUT ECROU		1				
52	6JE–45550–00	GEAR SET KIT, PIGNON		1				
53	90201–18023	WASHER, PLATE RONDELLE, PLATE		1				
54	90179–18009	NUT ECROU		1				
55	6JE–45560–00	GEAR 1 (26T) PIGNON 1 (26T)		1				
56	6JE–45611–00	SHAFT, PROPELLER ARBRE, HELICE		1				
57	6JE–45641–00	SHIFTER EMBRAYAGE		1				
58	61A–45634–01	SLIDE, SHIFT CONTRE-POUSSOIR		1				
59	6AW–45632–00	PIN, CROSS GOUPILLE DE CRABOT		1				
60	6AW–45631–00	CLUTCH, DOG CRABOT		1				
61	6AW–45633–00	RING, CROSS PIN JONC, GOUPILLE CRABOT		1				
62	6H1–45668–00	SHAFT, FREE 1 AXE 1		1				
63	61A–45635–00	PLUNGER, SHIFT POUSSOIR D'EMBRAYAGE		2				
64	90201–02M00	WASHER, PLATE RONDELLE, PLATE		1				
65	90183–02M03	NUT, SPRING ECROU, RESSORT		2				
66	90501–10M77	SPRING, COMPRESSION RESSORT, COMPRESSION		1				
67	93501–04011	BALL BILLE		2				

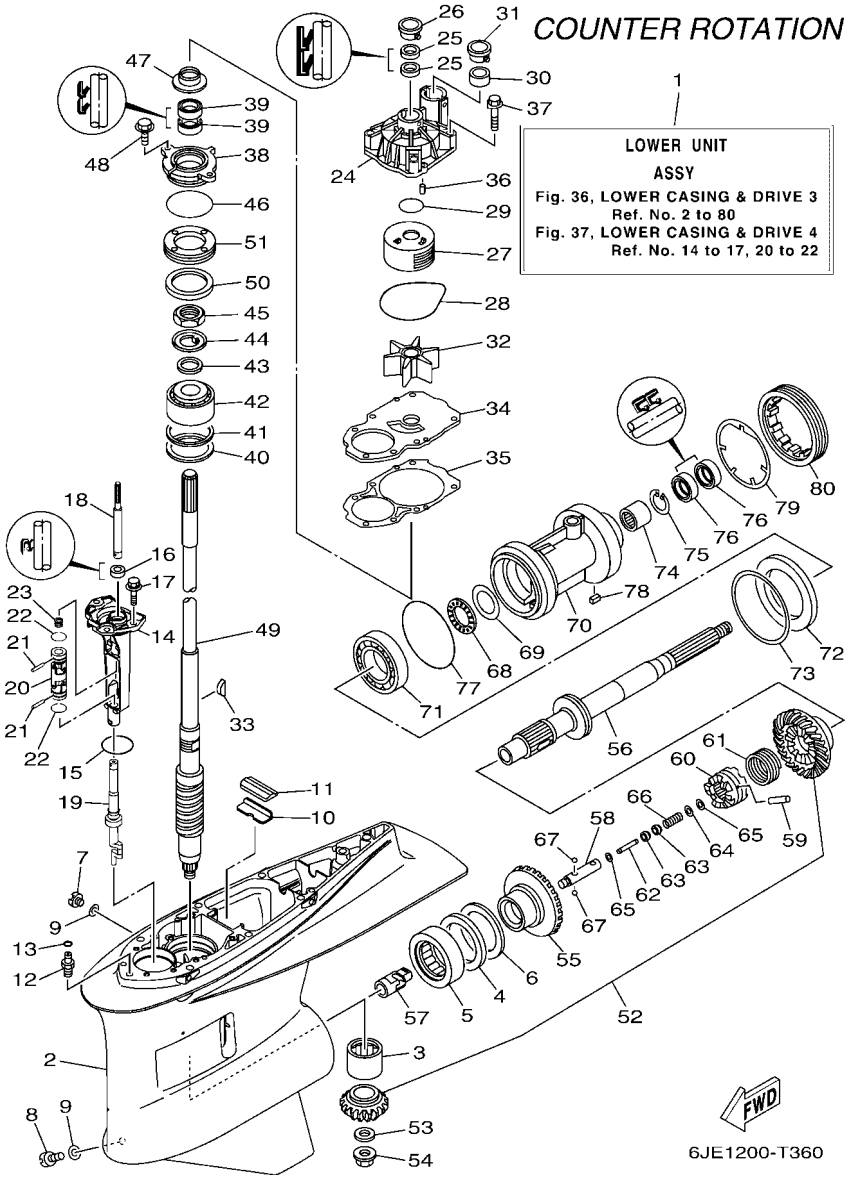

FIG. 36 LOWER CASING & DRIVE 3 — BOITIER D'HELICE TRANSMISSION3

REF. NO.	PART NO. N° PIECES	DESCRIPTION DESCRIPTION	6JD8	6JE8				REMARKS REMARQUES
68	93341–440U5	BEARING CERVEAUX DE DIRECTION		1				
69	6K1–45578–01	SHIM (T:0.10MM) CALE (T:0.10MM)		1				UR UR
	6K1–45578–10	SHIM (T:0.12MM) CALE (T:0.12MM)		1				UR UR
	6K1–45578–20	SHIM (T:0.15MM) CALE (T:0.15MM)		1				UR UR
	6K1–45578–30	SHIM (T:0.18MM) CALE (T:0.18MM)		1				UR UR
	6K1–45578–40	SHIM (T:0.30MM) CALE (T:0.30MM)		1				UR UR
	6K1–45578–50	SHIM (T:0.40MM) CALE (T:0.40MM)		1				UR UR
	6K1–45578–60	SHIM (T:0.50MM) CALE (T:0.50MM)		1				UR UR
70	6AX–45332–00	HOUSING, BEARING FLASQUE, ROULEMENT		1				
71	93332–000A2	BEARING ROULEMENT		1				
72	6AW–45576–00	WASHER, THRUST 2 RONDELLE DE CALAGE 2		1				
73	6AW–45577–00	SHIM (T:0.10MM) CALE (T:0.10MM)		1				UR UR
	6AW–45577–10	SHIM (T:0.12MM) CALE (T:0.12MM)		1				UR UR
	6AW–45577–20	SHIM (T:0.15MM) CALE (T:0.15MM)		1				UR UR
	6AW–45577–30	SHIM (T:0.18MM) CALE (T:0.18MM)		1				UR UR
	6AW–45577–40	SHIM (T:0.30MM) CALE (T:0.30MM)		1				UR UR
	6AW–45577–50	SHIM (T:0.40MM) CALE (T:0.40MM)		1				UR UR
	6AW–45577–60	SHIM (T:0.50MM) CALE (T:0.50MM)		1				UR UR
74	93311–63591	BEARING ROULEMENT		1				
75	99009–47500	CIRCLIP CIRCLIP		1				
76	93101–35019	OIL SEAL JOINT SPY		2				
77	93211–10232	O-RING JOINT TORIQUE		1				
78	90282–05008	KEY, STRAIGHT CLAVETTE, DROITE		1				
79	6AW–45383–00	WASHER, CLAW FREIN D'ECROU		1				
80	6AW–45384–00	NUT ECROU		1				

FIG. 37 LOWER CASING & DRIVE 4 — BOITIER D'HELICE TRANSMISSION4

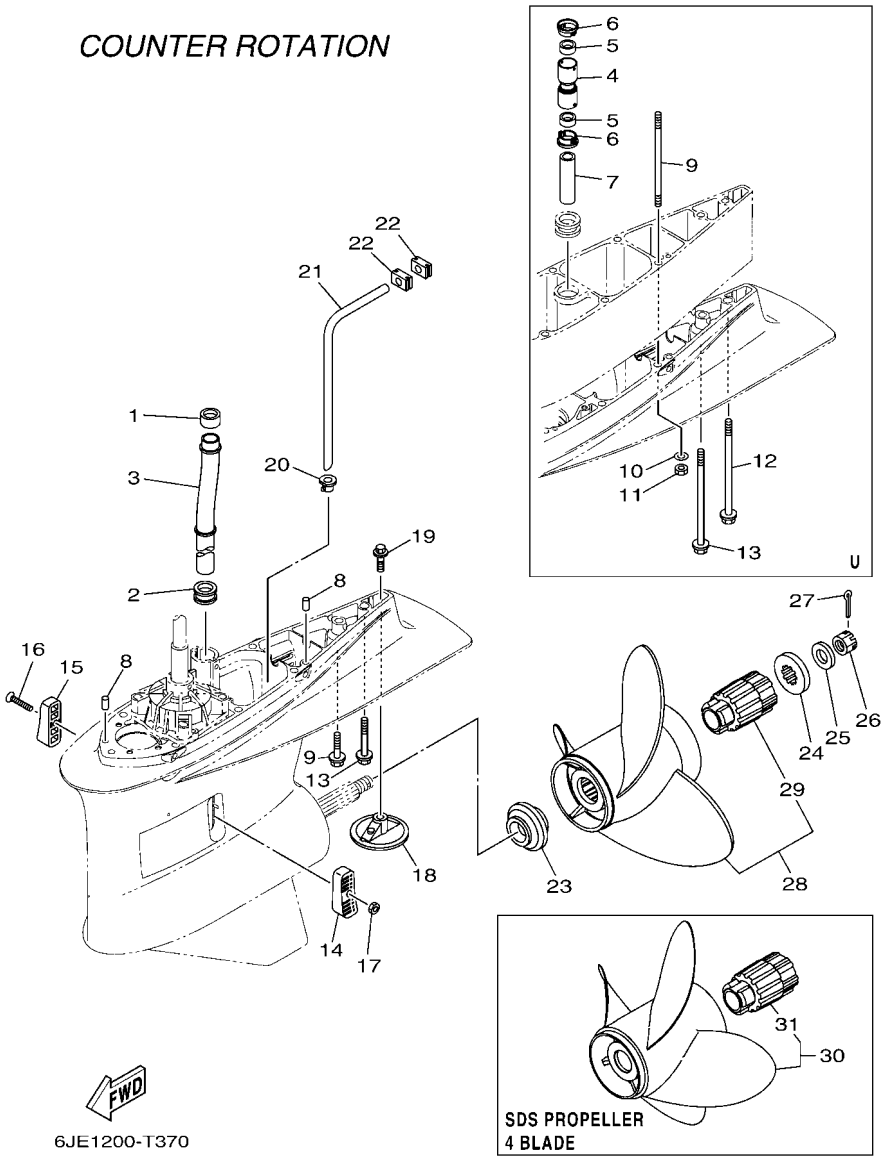

REF. NO.	PART NO. N° PIECES	DESCRIPTION DESCRIPTION	6JD8	6JE8				REMARKS REMARQUES
1	6AW–44365–01	DAMPER, WATER SEAL 1 JOINT, TUBE D'EAU 1		1				
2	6AW–44366–01	DAMPER, WATER SEAL 2 JOINT, TUBE D'EAU 2		1				
3	6CE–44361–00	TUBE, WATER 1 TUBE D'EAU 1		1				
4	6CE–44362–00	TUBE, WATER 2 TUBE D'EAU 2		1				U(30.3") U(30.3")
5	6AW–44365–01	DAMPER, WATER SEAL 1 JOINT, TUBE D'EAU 1		2				U(30.3") U(30.3")
6	6AW–44312–00	COVER, WATER PUMP HOUSING COUVERCLE		2				U(30.3") U(30.3")
7	6AW–44363–00	TUBE, WATER 3 TUBE D'EAU 3		1				U(30.3") U(30.3")
8	93608–16M16	PIN, DOWEL AXE		2				
9	90119–10024	BOLT, WITH WASHER BOULON, AVEC RONDELLE		7				X(25.3") X(25.3")
	90116–10067	BOLT, STUD GOUJON		6				U(30.3") U(30.3")
10	92995–10600	WASHER RONDELLE		6				U(30.3") U(30.3")
11	95380–10600	NUT ECROU		6				U(30.3") U(30.3")
12	90119–10008	BOLT, WITH WASHER BOULON, AVEC RONDELLE		1				U(30.3") U(30.3")
13	97E75–10570	BOLT, HEXAGON W/W DEEP RECESS VIS HEXAGONAL AVC RONDELLE		1				X(25.3") X(25.3")
	90119–10009	BOLT, WITH WASHER BOULON, AVEC RONDELLE		1				U(30.3") U(30.3")
14	6AW–45214–00	COVER, WATER INLET 1 GRILLE, ENTREE D'EAU 1		1				
15	6AW–45215–00	COVER, WATER INLET 2 GRILLE, ENTREE D'EAU 2		1				
16	90152–05003	SCREW, COUNTERSUNK VIS, TETE NOYEE		1				
17	90185–05002	NUT, NYLON ECROU,AUTO-BLOQUANT		1				
18	6CE–45373–00	ANODE ANODE		1				
19	90105–10M00	BOLT, FLANGE BOULON, A COLLERETTE		1				
20	6AW–44367–00	DAMPER, WATER SEAL 3 JOINT TUBE D'EAU 3		1				
21	6JD–44362–00	TUBE, WATER 2 TUBE D'EAU 2		1				
22	6AW–44376–01	GROMMET, WATER TUBE 2 PASSE-FIL, TUBE D'EAU 2		2				
23	6AW–45987–00	SPACER 1 ENTRETOISE 1		1				
24	6AW–45997–00	SPACER 2 ENTRETOISE 2		1				
25	90201–19M01	WASHER, PLATE RONDELLE, PLATE		1				

FIG. 37 LOWER CASING & DRIVE 4 — BOITIER D'HELICE TRANSMISSION4

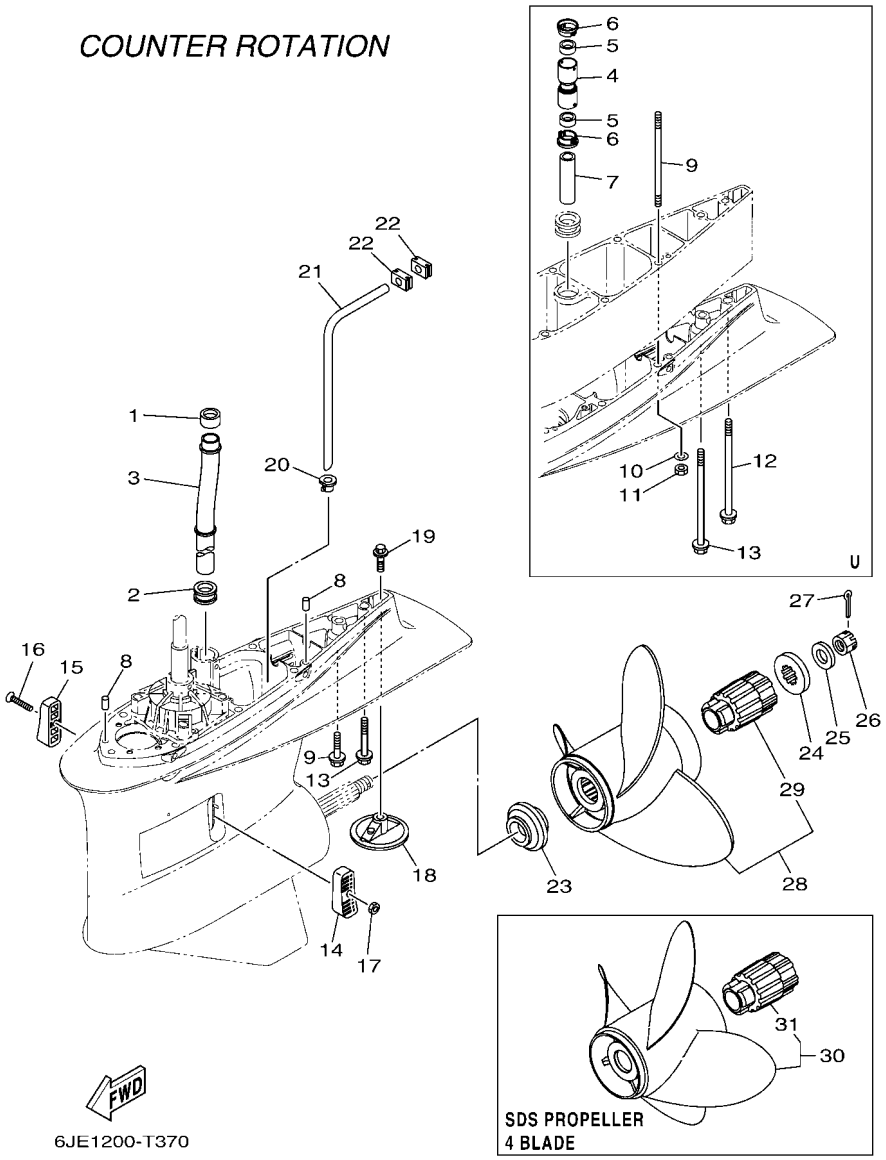

REF. NO.	PART NO. N° PIECES	DESCRIPTION DESCRIPTION	6JD8	6JE8				REMARKS REMARQUES
26	90171–18M04	NUT, CASTLE ECROU, CRENELE		1				
27	91490–40030	PIN. COTTER GOUPILLE		1				
28	6AX–45930–20	PROPELLER (3X16-1/4"X13"-XL) HELICE (3X16-1/4"X13"-XL)		1				UR SDS 3 BLADE UR SDS 3 BLADE
	6AX–45970–20	PROPELLER (3X16-1/4"X15"-XL) HELICE (3X16-1/4"X15"-XL)		1				UR SDS 3 BLADE UR SDS 3 BLADE
	6AX–45972–20	PROPELLER (3X16-1/4"X17"-XL) HELICE (3X16-1/4"X17"-XL)		1				UR SDS 3 BLADE UR SDS 3 BLADE
	6AX–45974–20	PROPELLER (3X15-1/2"X19"-XL) HELICE (3X15-1/2"X19"-XL)		1				UR SDS 3 BLADE UR SDS 3 BLADE
	6AX–45976–20	PROPELLER (3X15-1/4"X21"-XL) HELICE (3X15-1/4"X21"-XL)		1				UR SDS 3 BLADE UR SDS 3 BLADE
	6AX–45978–20	PROPELLER (3X15-1/4"X23"-XL) HELICE (3X15-1/4"X23"-XL)		1				UR SDS 3 BLADE UR SDS 3 BLADE
29	6AW–45C81–10	.DAMPER RUBBER, PROPELLER 1 .AMORTISSEUR HELICE 1		1				
30	6AX–45B70–20	PROPELLER (4X16-1/8"X15"-XL) HELICE (4X16-1/8"X15"-XL)		1				UR SDS 4 BLADE UR SDS 4 BLADE
	6AX–45B72–20	PROPELLER (4X16-1/8"X17"-XL) HELICE (4X16-1/8"X17"-XL)		1				UR SDS 4 BLADE UR SDS 4 BLADE
	6AX–45B76–20	PROPELLER (4X15-3/8"X22"-XL) HELICE (4X15-3/8"X22"-XL)		1				UR SDS 4 BLADE UR SDS 4 BLADE
	6AX–45B74–20	PROPELLER (4X15-3/8"X24"-XL) HELICE (4X15-3/8"X24"-XL)		1				UR SDS 4 BLADE UR SDS 4 BLADE
31	6AW–45C81–10	.DAMPER RUBBER, PROPELLER 1 .AMORTISSEUR HELICE 1		1				

FIG. 38 STEERING GUIDE ATTACHMENT 1 DIRECTION GUIDE ACCESSOIRE 1

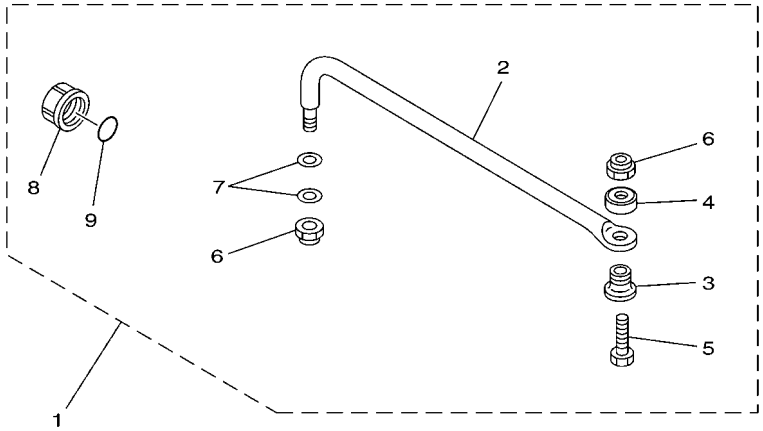

67H0100-9290

REF. NO.	PART NO. N° PIECES	DESCRIPTION DESCRIPTION	6JD8	6JE8				REMARKS REMARQUES
1	6E5–61350–02	STEERING GUIDE ATTACHMENT KIT FIXATIONS DE DIRECTION	1					AP AP
2	6E5–61351–01	.ROD, STEERING LINK .RENVOI DE DIRECTION	1					
3	90387–10M61	.COLLAR .COLLERETTE	1					
4	90560–12M01	.SPACER .ENTRETOISE	1					
5	6E5–61355–00	.BOLT .BOULON	1					
6	90185–09M01	.NUT, SELF-LOCKING .ECROU,AUTO-BLOQUANT	2					
7	90201–10M20	.WASHER, PLATE .RONDELLE, PLATE	2					
8	6E5–43145–01	.CAP, CLAMP BRACKET .CAPUCHON, PRESSE	1					
9	93210–16275	.O-RING .JOINT TORIQUE	1					

FIG. 39 STEERING GUIDE ATTACHMENT 2 DIRECTION GUIDE ACCESSOIRE 2

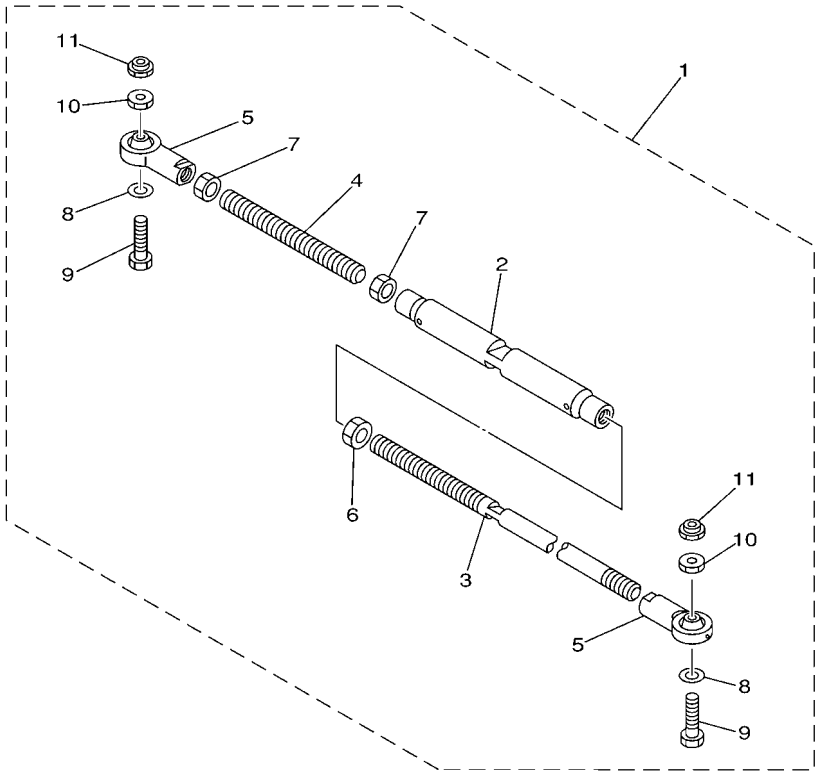

67H0100-0300

REF. NO.	PART NO. N° PIECES	DESCRIPTION DESCRIPTION	6JD8	6JE8				REMARKS REMARQUES
1	6E5–61310–00	TIE BAR ASSY (L:600-800MM) ASSEMBLAGE DU TIRANT (L:600-80		1				AP AP
2	6E5–61313–00	.ADJUSTER .TENDEUR		1				
3	6E5–61311–11	.TIE BAR .BARRE D'ACCOUPLEMENT		1				
4	6E5–61315–00	.TIE BAR .BARRE D'ACCOUPLEMENT		1				
5	6E5–61303–01	.STEERING AXLE COMP. .AXLE COMP.		2				
6	90170–14M06	.NUT .ECROU		1				
7	95380–14700	.NUT .ECROU		2				
8	90201–10M76	.WASHER, PLATE .RONDELLE, PLATE		2				
9	90101–09M70	.BOLT .BOULON		2				
10	90170–09M05	.NUT .ECROU		2				
11	90185–09M01	.NUT, SELF-LOCKING .ECROU,AUTO-BLOQUANT		2				

FIG. 40 OPTIONAL PARTS 1 — PIECES OPTIONNELLES 1

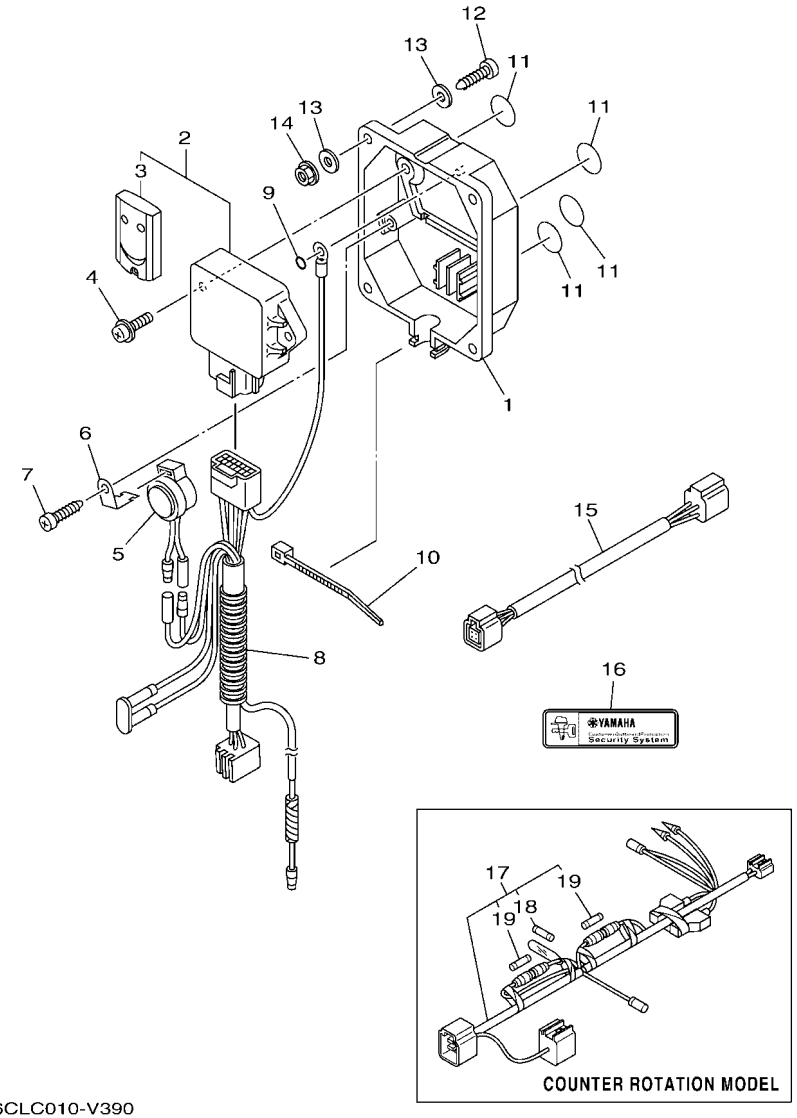

6CLC010-V390

REF. NO.	PART NO. N° PIECES	DESCRIPTION DESCRIPTION	6JD8	6JE8				REMARKS REMARQUES
1	6Y8–86267–00	CASE COMPLETE 1 CARTER (ENS.) 1	1					
2	6Y8–86260–03	REMOTE CONTROL UNIT ASSY UNITE DE TELECOMMANDE (ENS.)	1					
3	6AA–86261–01	.XMTR. COMP. .XMTR. COMP.	2					
4	97980–06216	SCREW, WITH WASHER VIS, AVEC RONDELLE	2					
5	6X4–83383–00	BUZZER RONFLEUR	1					
6	6X4–83386–00	STAY, BUZZER SUPPOR, RONFLEUR	1					
7	97780–60620	SCREW, TAPPING VIS, TETE BOMBEE	1					
8	6Y8–82509–10	WIRE, SUB LEAD FIL, SECONDAIRE	1					
9	93210–04279	O-RING JOINT TORIQUE	1					
10	90465–11M10	CLAMP BRIDE	1					
11	6Y8–8454G–00	PATCH 1 TAMPON 1	4					
12	90167–06M00	SCREW, TAPPING VIS, TETE FRAISEE	4					UR UR
	97880–06035	SCREW, PAN HEAD VIS, TETE TRONCONIQUE	4					UR UR
13	90201–06M30	WASHER, PLATE RONDELLE, PLATE	8					
14	95780–06300	NUT, FLANGE ECROU	4					
15	6Y8–82521–11	2FT PIGTAIL BUS FAISCEAU (L: 2FT.)	1					
16	6Y8–48277–00	STICKER 1 ETIQUETTE 1	4					
17	6Y8–81315–04	LEAD WIRE ASSY FIL		1				AP AP
18	6TA–82151–01	.FUSE(5A) .FUSIBLE (5A)		1				
19	6Y8–82151–00	.FUSE(5A) .FUSIBLE (5A)		2				

FIG. 41 OPTIONAL PARTS 2 — PIECES OPTIONNELLES 2

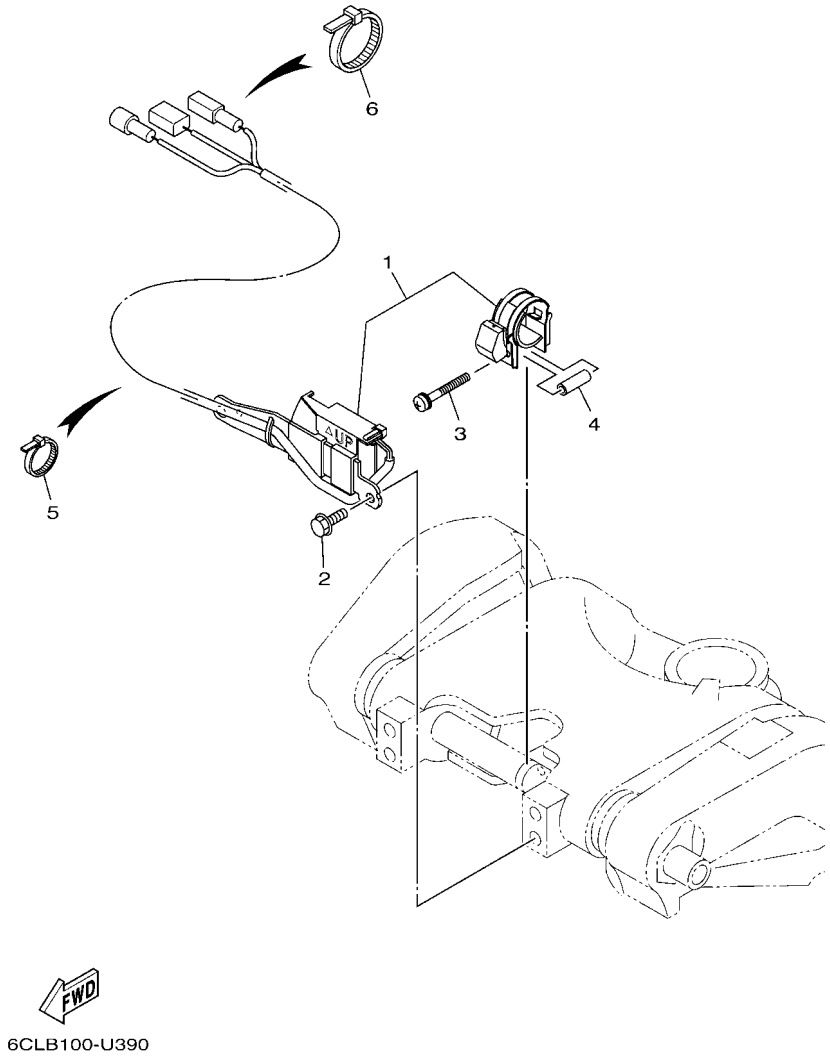

REF. NO.	PART NO. N° PIECES	DESCRIPTION DESCRIPTION	6JD8	6JE8				REMARKS REMARQUES
1	6CE–825E0–02	TILT LIMIT SWITCH ASSY COMMUTATEUR, LIMIT INCLINAISON	1	1				
2	97E95–06516	BOLT, HEXAGON W/W DEEP RECESS VIS HEXAGONAL AVC RONDELLE	2	2				
3	90159–05059	SCREW, WITH WASHER VIS, AVEC RONDELLE	1	1				
4	90387–05004	COLLAR COLLERETTE	1	1				
5	90465–11M10	CLAMP BRIDE	9	9				
6	90465–13M18	CLAMP BRIDE	1	1				

FIG. 42 OPTIONAL PARTS 3 — PIECES OPTIONNELLES 3

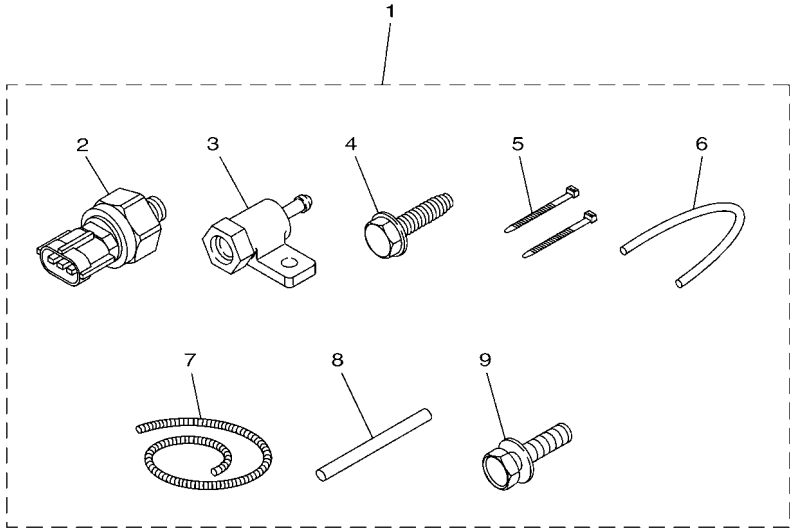

6CE6300-P430

REF. NO.	PART NO. N° PIECES	DESCRIPTION DESCRIPTION	6JD8	6JE8				REMARKS REMARQUES
1	60V–8A4L1–1C	SENSOR, MODULE 1 SENSOR (ENS.) 1	1					
2	6AW–8366B–10	.SENSOR, WATER PRESSURE .SONDE DE PRESSION D'EAU	1					
3	60V–8366D–00	.ADAPTOR, INPUT .CONNECTEUR 3	1					
4	90109–06M81	.BOLT .BOULON	1					
5	90465–11M10	.CLAMP .BRIDE	2					
6	90445–07017	.HOSE (L: 550MM) .DURITE (L: 550MM)	1					
7	90447–07013	.HOSE, COVER (L: 700MM) .DURITE, COUVERCLE (L: 700MM)	1					
8	60V–42629–01	.SEAL .JOINT	1					
9	97E95–06516	.BOLT, HEXAGON W/W DEEP RECESS .VIS HEXAGONAL AVC RONDELLE	1					

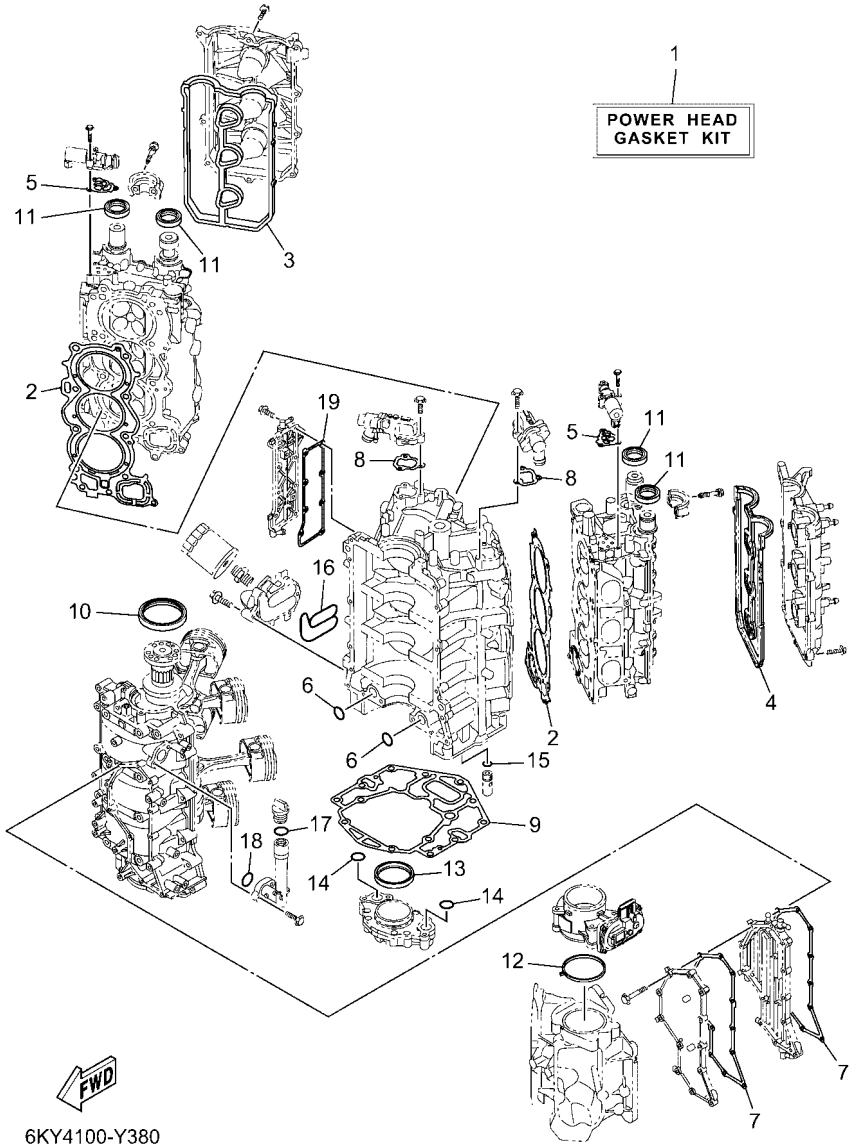

FIG. 43 REPAIR KIT 1 — KITS DE REPARATION 1

REF. NO.	PART NO. N° PIECES	DESCRIPTION DESCRIPTION	6JD8	6JE8				REMARKS REMARQUES
1	6CB–W0001–05	POWER HEAD GASKET KIT POCHETTE DE JINTS TETE MOTRICE	1	1				
2	6CB–11181–00	.GASKET, CYLINDER HEAD 1 .JOINT, DE CULASSE 1	2	2				
3	6CB–11193–00	.GASKET, HEAD COVER 1 .JOINT, COUVERCLE DE CULASSE 1	1	1				
4	6CB–11194–00	.GASKET, HEAD COVER 2 .JOINT, COUVERCLE DE CULASSE 2	1	1				
5	6CB–1242F–00	.GASKET, FILTER .JOINT, FILTRE	2	2				
6	93210–26658	.O-RING .JOINT TORIQUE	2	2				
7	6CB–15451–01	.GASKET, CRANKCASE COVER 1 .JOINT, COUVERCLE DE CARTER 1	2	2				
8	6CB–12427–11	.GASKET, HOUSING COVER 1 .JOINT, COUVERCLE DE CARTER 1	2	2				
9	6KA–11351–00	.GASKET, CYLINDER .JOINT, D'EMBASE	1	1				
10	93102–85008	.OIL SEAL .JOINT SPY	1	1				
11	93102–38008	.OIL SEAL .JOINT SPY	4	4				
12	6CB–13556–00	.GASKET, MANIFOLD .JOINT, TUBULURE	1	1				
13	6CB–11355–00	.SEAL, CYLINDER 1 .JOINT, SPY CYLINDRE	1	1				
14	93210–26658	.O-RING .JOINT TORIQUE	2	2				
15	6CB–13473–00	.O-RING .JOINT TORIQUE	1	1				
16	6CB–13477–00	.GASKET .JOINT	1	1				
17	93210–24M79	.O-RING .JOINT TORIQUE	1	1				
18	93210–27370	.O-RING .JOINT TORIQUE	1	1				
19	6ML–1131B–00	.GASKET, COVER .JOINT, COUVERCLE	1	1				

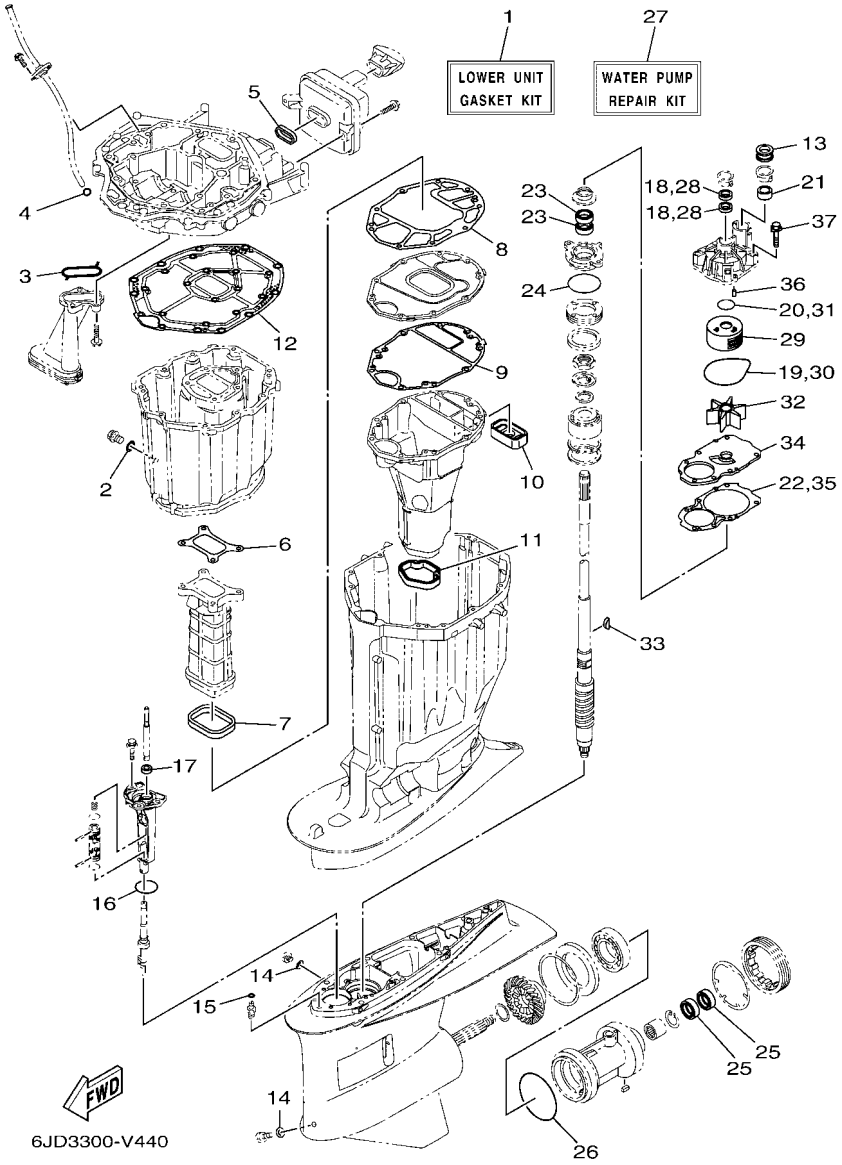

FIG. 44 REPAIR KIT 2 — KITS DE REPARATION 2

REF. NO.	PART NO. N° PIECES	DESCRIPTION DESCRIPTION	6JD8	6JE8				REMARKS REMARQUES
1	6JD–W0001–21	LOWER UNIT GASKET KIT POCHETTE DE JOINTS EMBASE	1	1				
2	90430–14M09	.GASKET .JOINT	1	1				
3	6AW–13415–00	.SEAL, OIL STRAINER .JOINT, FILTRE A HUILE	1	1				
4	93210–19MJ3	.O-RING .JOINT TORIQUE	1	1				
5	6CB–14755–01	.GASKET, SILENCER .JOINT, SILENCIEUX	1	1				
6	6CB–41134–00	.GASKET, EXHAUST MANIFOLD 2 .JOINT, PIPE D'ECHAPPEMENT 2	1	1				
7	6CB–41138–00	.SEAL, EXT. 1 .JOINT DE GROUPE 1	1	1				
8	6CB–41135–00	.GASKET, EXHAUST MANIFOLD .JOINT, PIPE D'ECHAPPEMENT	1	1				
9	6CE–41136–00	.GASKET, EXHAUST MANIFOLD 4 .JOINT, PIPE D'ECHAPPEMENT 4	1	1				
10	6CE–45127–00	.SEAL .JOINT	1	1				
11	6CE–45123–00	.GASKET, MUFFLER .JOINT, POT DE DETENTE	1	1				
12	6CB–45113–10	.GASKET, UPPER CASING .JOINT, TUBE D'ARBRE	1	1				
13	6AW–44366–01	.DAMPER, WATER SEAL 2 .JOINT, TUBE D'EAU 2	1	1				
14	90430–08003	.GASKET .JOINT	2	2				
15	93210–07003	.O-RING .JOINT TORIQUE	1	1				
16	93210–58144	.O-RING .JOINT TORIQUE	1	1				
17	93101–12M70	.OIL SEAL .JOINT SPY	1	1				
18	93104–22M07	.OIL SEAL .JOINT SPY	2	2				
19	93210–94003	.O-RING .JOINT TORIQUE	1	1				
20	93210–37160	.O-RING .JOINT TORIQUE	1	1				
21	6AW–44365–01	.DAMPER, WATER SEAL 1 .JOINT, TUBE D'EAU 1	1	1				
22	6JD–44315–00	.GASKET, WATER PUMP .JOINT, POMPE A EAU	1	1				
23	93101–28019	.OIL SEAL .JOINT SPY	2	2				
24	93210–69MG6	.O-RING .JOINT TORIQUE	1	1				
25	93101–35019	.OIL SEAL .JOINT SPY	2	2				
26	93211–10232	.O-RING .JOINT TORIQUE	1	1				
27	6JD–W0078–00	WATER PUMP REPAIR KIT KIT DE REPARATION DE LA POMPE	1	1				

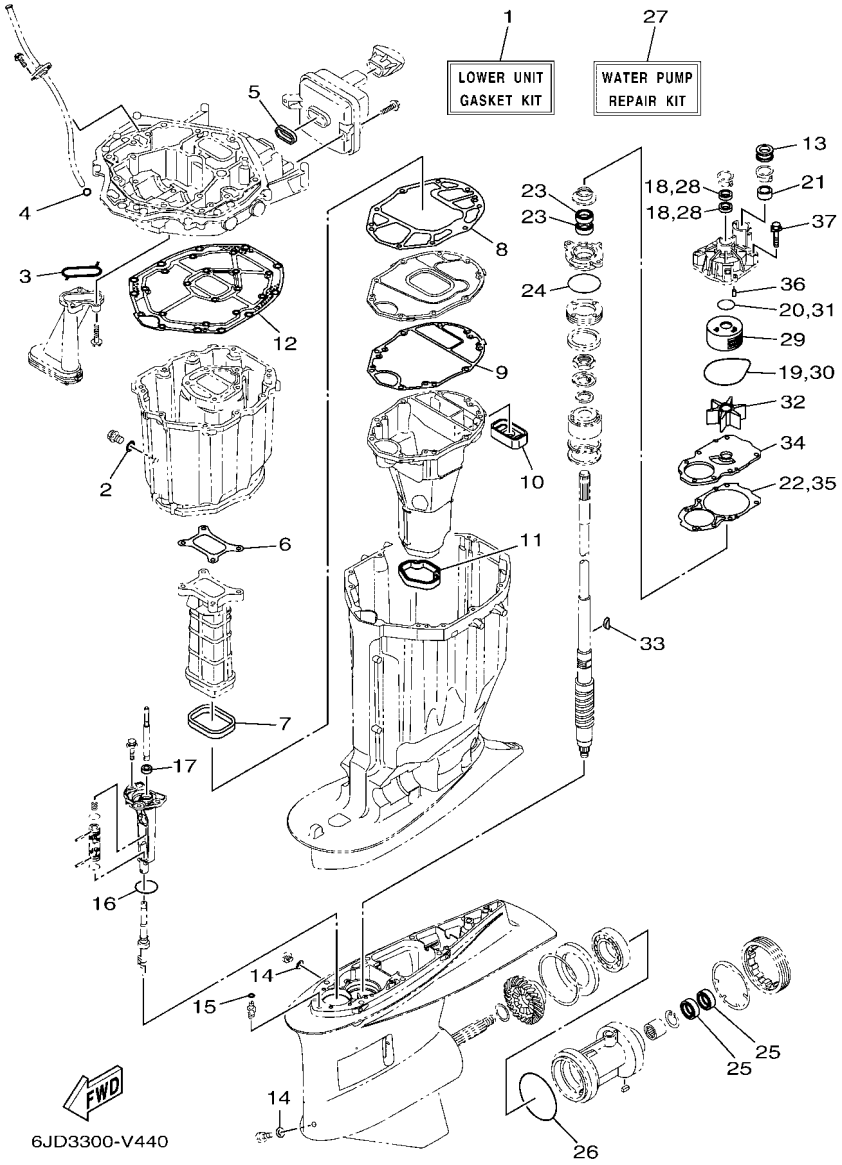

FIG. 44 REPAIR KIT 2 — KITS DE REPARATION 2

REF. NO.	PART NO. N° PIECES	DESCRIPTION DESCRIPTION	6JD8	6JE8				REMARKS REMARQUES
28	93104–22M07	.OIL SEAL .JOINT SPY	2	2				
29	6JD–44322–00	.INSERT, CARTRIDGE .CUVETTE	1	1				
30	93210–94003	.O-RING .JOINT TORIQUE	1	1				
31	93210–37160	.O-RING .JOINT TORIQUE	1	1				
32	6CE–44352–00	.IMPELLER .TURBINE	1	1				
33	90280–04002	.KEY, WOODRUFF .CLAVETTE, DEMI-LUNE	1	1				
34	6JD–44323–00	.OUTER PLATE, CARTRIDGE .PLAQUE EXTERIEURE	1	1				
35	6JD–44315–00	.GASKET, WATER PUMP .JOINT, POMPE A EAU	1	1				
36	93606–12019	.PIN, DOWEL .GOUPILLE	2	2				
37	90119–08191	.BOLT, WITH WASHER .BOULON, AVEC RONDELLE	4	4				

NUMERICAL INDEX
INDEX NUMERIQUE

PART NO. N° PIECES	REF. NO.
6JD–11000–04	3 – 1
6CE–11110–12–9S	5 – 2
6CE–11120–12–9S	5 – 12
6S5–11133–10	5 – 3
	5 – 13
6CB–11181–00	5 – 25
	43 – 2
6CB–11191–02	5 – 30
6CB–11192–02	5 – 34
6CB–11193–00	5 – 31
	43 – 3
6CB–11194–00	5 – 35
	43 – 4
6ML–11301–00	5 – 19
6ML–1131B–00	3 – 12
	43 – 19
6CE–1131C–00–9S	3 – 9
68T–11325–00	1 – 4
	3 – 32
6ML–11325–00	1 – 7
	5 – 20
63P–11325–01	1 – 1
	3 – 10
	3 – 19
63P–11325–11	1 – 16
	32 – 2
67F–11328–01	5 – 21
6AW–1132N–01	1 – 5
	3 – 34
6AW–1132P–00	1 – 3
	3 – 30
6KA–11351–00	3 – 29
	43 – 9
6CB–11355–00	33 – 13
	43 – 13
6CB–1135A–00	6 – 6
6CB–11410–00	4 – 1
6CB–11416–00	4 – 5
6CB–11416–10	4 – 5
6CB–11416–20	4 – 5
6CB–11416–30	4 – 5
6CB–11416–40	4 – 5
6CB–11417–00	4 – 6
6CB–11417–10	4 – 6
6CB–11417–20	4 – 6
6CB–11417–30	4 – 6
6CB–11417–40	4 – 6
6CB–11426–03	4 – 7

PART NO. N° PIECES	REF. NO.
6CB–11427–03	4 – 8
6CB–11478–00	4 – 2
6CB–1149A–00	6 – 10
6KA–11567–00	8 – 17
6CB–11590–06	8 – 28
6GR–11603–00	4 – 12
6CE–11631–02	4 – 11
6CB–11633–00	4 – 13
63P–11654–10	4 – 10
6JD–11656–00	4 – 14
6JD–11656–10	4 – 14
6JD–11656–20	4 – 14
6KW–11998–00	5 – 42
6KW–11999–00	5 – 43
6CB–12111–00	8 – 1
6CB–12113–00	8 – 4
51Y–12119–00	8 – 7
6JD–12121–00	8 – 2
6KA–12171–01	8 – 9
6KA–12172–01	8 – 13
6KA–12181–00	8 – 11
6KA–12182–00	8 – 15
6CE–12411–00	1 – 2
	3 – 21
67F–12412–00	3 – 22
6CE–12413–A0–9S	3 – 24
6CE–12413–B0–9S	3 – 23
6CB–12422–10–9S	3 – 25
6CB–12427–11	3 – 26
	43 – 8
6CB–1242F–00	6 – 2
	43 – 5
6CB–1243E–00	7 – 15
6ML–1244G–00	7 – 12
6CE–1244H–00	7 – 14
6CE–12481–10	18 – 24
6CE–12482–10	10 – 9
6CE–12483–00	18 – 18
6KA–12483–00	10 – 27
6CB–12484–10	10 – 11
6CE–12485–00	18 – 26
6CE–1248A–00	18 – 16
6AW–12572–00	25 – 18
6CB–12576–10	7 – 3
6CB–12577–00	7 – 8
6R3–12581–10	25 – 19
6AW–12582–00	25 – 20
6R3–12583–10	25 – 21

PART NO. N° PIECES	REF. NO.
6P2–12615–00	8 – 25
6P2–12623–00	8 – 20
	8 – 23
6CB–12645–01	8 – 19
6CB–1264A–01	8 – 22
6P2–12663–00	8 – 21
	8 – 24
6CB–13016–00	1 – 10
	13 – 5
6AW–13119–00	33 – 11
6KA–13132–00	13 – 31
6CB–13161–11	12 – 1
6CB–13171–11	12 – 5
6CB–13300–00	33 – 9
6CB–13329–00	33 – 10
6CB–13411–00	33 – 6
6AW–13415–00	33 – 7
	44 – 3
6CE–13437–61	17 – 18
N26–13440–04	1 – 6
	3 – 36
6CE–13446–10–9S	3 – 38
6CB–13473–00	33 – 17
	43 – 15
6CB–13477–00	3 – 39
	43 – 16
6CB–13490–00	33 – 16
6CB–13532–10	10 – 2
6CB–13533–00	10 – 1
6CB–13545–00	10 – 19
6CB–13546–01	10 – 23
6CB–13547–00	10 – 24
6CB–13548–00	10 – 26
6CB–13556–00	11 – 3
	43 – 12
6CB–13577–00	12 – 4
	12 – 8
68V–13577–01	14 – 4
6CB–13593–00	13 – 21
69J–13631–00	33 – 12
6CE–13641–00	9 – 5
6CB–13645–00	9 – 6
6CB–13646–00	9 – 7
6CB–13711–00	11 – 2
63P–13716–00	13 – 20
6CB–13751–12	11 – 1
6AW–13761–01	12 – 2
	12 – 6

PART NO. N° PIECES	REF. NO.
6AW–13781–00	13 – 33
6CB–13782–00	10 – 17
6AW–13784–00	13 – 34
6KA–13898–00	11 – 7
6CB–13898–11	11 – 8
6CB–13906–01	13 – 8
6CB–13907–12	13 – 22
63P–13915–00	1 – 11
	13 – 23
6CB–13971–01	14 – 10
6CB–13972–00	14 – 12
6CB–13974–01	14 – 11
6AW–1410B–00	12 – 3
	12 – 7
6CB–14146–00	13 – 10
6P2–14149–00	14 – 2
6CB–14180–17	13 – 1
6ML–14181–00	13 – 15
6CB–14182–02	13 – 2
6P2–14191–00	13 – 16
68V–14216–00	13 – 12
6CB–14216–00	13 – 6
6P2–14386–00	13 – 36
6AW–1441J–01	9 – 11
6CE–14435–00	21 – 32
6CB–14440–01	9 – 9
6LH–1447B–00	13 – 32
6CB–14546–00	13 – 25
6CB–14564–00	13 – 9
63P–14567–00	13 – 35
6K8–14591–10	13 – 18
6KA–14711–00	32 – 20
6CB–14750–A0	32 – 9
6CB–14755–01	32 – 11
	44 – 5
6CB–1475A–00	10 – 28
6CB–1475F–00	10 – 29
6CB–1475G–10	10 – 32
6CB–1475H–00	13 – 13
6CB–1475J–00	13 – 14
6CE–14872–00	18 – 25
	18 – 28
6CB–14984–00	1 – 12
	13 – 30
6CB–14985–00	13 – 24
6EK–14989–00	10 – 31
6CE–15100–10	3 – 2
6AW–15142–00	5 – 38

PART NO. N° PIECES	REF. NO.
6CB–15142–00	6 – 8
6CB–15187–00	3 – 5
6CB–15311–01	33 – 1
6BB–15316–01	32 – 29
6CB–15319–00	3 – 43
6CB–15362–00	33 – 18
6G8–15363–00	3 – 41
6CB–15373–01	9 – 8
6CB–15377–00	33 – 19
6CE–15411–00–9S	3 – 14
6CE–15421–10–9S	3 – 15
6CB–15451–01	3 – 17
	43 – 7
6CB–15481–00	3 – 6
6CB–15512–00	8 – 29
6CB–15544–00	6 – 4
6CB–2134V–00	5 – 40
69J–2134X–00	9 – 16
6E5–21744–00	10 – 25
6CB–2416A–00	10 – 5
69J–24170–00	9 – 14
69J–2419A–01	9 – 15
6CB–24217–00	13 – 7
60E–24300–01	14 – 9
6CB–24313–00	15 – 18
6CB–24314–01	15 – 2
6CB–24315–00	25 – 13
6CB–24317–00	14 – 6
6CB–24323–00	14 – 7
6CB–24324–00	14 – 5
6E5–24351–51	15 – 3
6AW–24360–02	16 – 1
6G8–24376–00	10 – 30
6CE–24376–01	18 – 27
6CE–24377–00	18 – 17
6AW–24377–01	15 – 4
688–24378–00	7 – 2
	10 – 22
	10 – 37
	18 – 30
6CE–24378–00	7 – 13
6E5–24378–00	14 – 8
68V–24379–10	13 – 11
6GR–24410–02	13 – 26
6EK–24452–00	13 – 17
4SV–24453–00	13 – 37
6CB–24460–00	13 – 4
6CB–24461–00	14 – 1

PART NO. N° PIECES	REF. NO.
6P3–24469–00	15 – 10
6CB–24482–00	13 – 19
6CB–24491–00	13 – 29
6CB–24492–00	13 – 27
6CB–24501–01	1 – 9
	13 – 3
6P3–24519–00	15 – 9
6P3–24560–23	15 – 7
6P3–24563–02	1 – 14
	15 – 12
6P3–24564–00	1 – 13
	15 – 11
6CB–24566–00	15 – 13
6CB–24592–00	13 – 28
6CB–24596–01	15 – 20
67F–28100–12	15 – 22
67F–2812A–00	20 – 31
6JD–28199–76–D0	15 – 23
6JD–28199–76–E0	15 – 23
6JD–28199–76–F0	15 – 23
6JD–28199–76–G0	15 – 23
6JD–28199–76–H0	15 – 23
6JD–28199–76–S0	15 – 23
6JD–28199–86–K0	15 – 24
6JD–28199–86–L0	15 – 24
6JD–28199–86–M0	15 – 24
6JD–28199–86–N0	15 – 24
6JD–28199–86–P0	15 – 24
6JD–28199–86–R0	15 – 24
6CB–41132–01	32 – 13
6CB–41134–00	32 – 14
	44 – 6
6CB–41135–00	32 – 17
	44 – 8
6CE–41136–00	32 – 19
	44 – 9
6CE–41137–01	32 – 1
6CB–41138–00	32 – 16
	44 – 7
6CB–42134–01	2 – 13
6AW–42169–00	25 – 15
6CE–42195–10	27 – 8
6BG–42384–00	25 – 2
6DA–42384–00	24 – 23
6CE–42510–00–8D	29 – 5
6JD–42610–01	2 – 1
6CB–42615–01	24 – 5
6BG–42617–00	21 – 9

PART NO. N° PIECES	REF. NO.
6CB–42617–00	21 – 10
6CE–4261A–02–8D	2 – 2
6CB–42628–00	2 – 16
6CB–42629–00	21 – 11
60V–42629–01	42 – 8
6CE–42635–00	2 – 3
6CB–42643–00	25 – 29
6CB–42644–00	25 – 30
6CB–42647–B0	2 – 6
6KW–42662–00	5 – 44
6AW–42663–01	2 – 12
6JD–42675–01	2 – 19
6JD–42676–01	2 – 20
6JD–42677–01	2 – 21
6JD–42678–01	2 – 18
6S1–4267A–01	2 – 23
6JD–42681–01	2 – 22
6KN–42697–00	2 – 17
6CB–42710–00–8D	24 – 1
6CB–42716–01	24 – 6
69J–42717–01	25 – 11
6DA–42717–01	24 – 22
69J–42723–01	21 – 26
6E5–42724–01	32 – 8
6CE–42725–04	24 – 2
6H4–42726–01	25 – 4
6H1–42726–22	25 – 1
61A–42727–01	25 – 5
64G–42727–01	25 – 6
6CE–42733–00	25 – 7
6CE–42734–00	25 – 8
6CE–42741–02–8D	26 – 1
6CB–42743–00	24 – 26
6CB–42744–00	25 – 35
6H4–42748–01	24 – 24
68F–42753–00	24 – 32
6CB–42756–00	24 – 30
69M–42758–01	18 – 5
	20 – 10
6CB–42761–00	24 – 3
6CB–42766–00	24 – 28
6CB–42769–02	32 – 12
6CE–42771–02–8D	26 – 2
6CE–42774–B0	26 – 15
6AW–42785–00	25 – 17
6CE–42786–01	25 – 9
6CE–42787–01	25 – 10
6EE–42794–41	24 – 34

PART NO. N° PIECES	REF. NO.
6EE–42794–51	24 – 35
6CB–42815–02–8D	24 – 7
6CB–42816–02–8D	24 – 8
6CB–42817–02–8D	24 – 9
6CB–42818–00	24 – 13
6CB–42819–00	24 – 14
69J–43111–11–8D	28 – 1
69J–43112–03–8D	28 – 12
6E5–43126–10	28 – 39
6R3–43131–30	28 – 18
61A–43132–01	28 – 10
61A–43133–01	28 – 13
66T–43144–00	24 – 17
6G5–43144–00	28 – 29
6E5–43145–01	38 – 8
6G5–43148–00	28 – 34
61A–43181–01	28 – 31
6G5–43185–02	28 – 32
61A–43311–22–8D	28 – 26
6AW–43376–00	29 – 3
69J–43800–15–8D	30 – 1
69J–43801–01	30 – 4
6ML–43805–00	31 – 2
6KA–43806–00	31 – 4
6CE–4380P–00	30 – 12
6CE–43810–01	30 – 3
61A–43811–00	30 – 9
63P–43812–20	30 – 76
61A–43813–02	30 – 18
6H1–43814–11	30 – 17
69J–43816–00	30 – 62
69J–43817–00	30 – 67
61A–43818–00	30 – 25
69J–4381C–00	30 – 30
	30 – 35
69J–4381J–00	30 – 63
69J–43820–01	30 – 78
61A–43821–02	30 – 77
69J–43828–00	30 – 70
6H1–43829–00	30 – 73
69J–4382E–00	30 – 11
69J–43830–01	30 – 33
69J–43831–00	30 – 65
69J–43833–02	30 – 21
69J–43835–10	30 – 19
6CE–43840–01	30 – 2
6CJ–43841–00	30 – 42
6CJ–43843–00	30 – 53

PART NO. N° PIECES	REF. NO.
6H1–43844–10	30 – 55
63P–43844–20	30 – 50
69J–43845–00	30 – 28
69A–4384F–00	30 – 39
69J–4384G–00	30 – 58
6H1–4384G–11	30 – 54
69J–4384H–00	30 – 10
61A–4384H–10	30 – 81
6CJ–4384M–00	30 – 38
69J–43851–00	30 – 49
69J–43853–00	30 – 45
69J–43854–00	30 – 57
69J–43855–00	30 – 52
6H1–43856–10	30 – 56
61A–43861–00	30 – 14
	30 – 16
	30 – 74
63P–43861–20	30 – 6
6KA–43862–00	31 – 12
6D8–43863–00	30 – 27
	30 – 75
61A–43864–00	30 – 80
60V–4386A–00	30 – 44
6KA–4386K–00	31 – 5
61A–43871–00	30 – 15
69J–43871–00	30 – 61
6H1–43872–00	30 – 7
61A–43874–00	30 – 79
6H1–43875–00	30 – 29
61A–43875–10	30 – 82
61A–43876–01	30 – 26
6KA–43879–00	31 – 7
6KA–4387G–00	31 – 8
69J–43880–29–8D	31 – 1
6KA–43882–00	31 – 11
6H1–43883–00	30 – 43
69J–43888–00	30 – 71
69J–4388E–01	30 – 23
69J–4388F–00	30 – 68
6KA–4388F–00	31 – 10
69J–4388H–00	30 – 66
69J–4388J–00	30 – 20
6KA–43892–00	31 – 3
6CJ–43893–00	30 – 46
69J–43894–00	30 – 41
69J–43899–01	30 – 31
61A–4389H–01	30 – 8
69J–4389J–00	30 – 32

PART NO. N° PIECES	REF. NO.
69J–4389J–00	30 – 36
6CE–44117–10	27 – 14
6CE–44118–A0	27 – 18
6JD–44120–01	27 – 20
6CE–44121–10	27 – 16
6CE–44122–20	27 – 9
6CE–44142–20	27 – 7
6JD–44150–00	34 – 19
	36 – 19
6JD–44153–00	34 – 18
	36 – 18
6JD–44153–10	34 – 18
	36 – 18
6CE–44194–01	29 – 30
6CE–44311–01	34 – 24
	36 – 24
6AW–44312–00	34 – 26
	34 – 31
	35 – 6
	36 – 26
	36 – 31
	37 – 6
6JD–44315–00	34 – 35
	36 – 35
	44 – 22
	44 – 35
6JD–44322–00	34 – 27
	36 – 27
	44 – 29
6JD–44323–00	34 – 34
	36 – 34
	44 – 34
6CE–44352–00	34 – 32
	36 – 32
	44 – 32
6CE–44361–00	35 – 3
	37 – 3
6CE–44362–00	35 – 4
	37 – 4
6JD–44362–00	35 – 21
	37 – 21
6AW–44363–00	35 – 7
	37 – 7
6AW–44365–01	34 – 30
	35 – 1
	35 – 5
	36 – 30
	37 – 1

PART NO. N° PIECES	REF. NO.
6AW–44365–01	37 – 5
	44 – 21
6AW–44366–01	32 – 45
	35 – 2
	37 – 2
	44 – 13
6AW–44367–00	35 – 20
	37 – 20
6AW–44376–01	35 – 22
	37 – 22
6P2–44391–00	24 – 25
6CE–44511–00	29 – 32
6CE–44514–00	29 – 22
6CE–44526–00	29 – 23
6G5–44526–00	28 – 4
6CE–44532–01	29 – 25
6CE–44533–00	29 – 31
6CE–44536–00	29 – 24
6CE–44551–00–CA	29 – 10
6CE–44552–00–CA	29 – 20
6CE–44555–00	29 – 14
6CE–44574–00	29 – 12
6CE–44575–00	29 – 13
6CE–45111–01–8D	32 – 25
6CB–45113–10	32 – 26
	44 – 12
6CE–45123–00	32 – 24
	44 – 11
6CE–45127–00	32 – 23
	44 – 10
6BB–45152–01	32 – 30
61A–45155–01	32 – 34
6KA–45181–00	32 – 18
6CE–45211–10–8D	32 – 44
6AW–45214–00	35 – 14
	37 – 14
6AW–45215–00	35 – 15
	37 – 15
6AW–45244–00	34 – 51
	36 – 51
6G5–45251–02	1 – 15
	28 – 3
6JD–45300–01–8D	34 – 1
6JE–45300–01–8D	36 – 1
6JD–45300–11–8D	34 – 1
6JE–45300–11–8D	36 – 1
6JD–45301–00–8D	34 – 2
	36 – 2

PART NO. N° PIECES	REF. NO.
69J–45318–01	32 – 32
6JD–45319–00	34 – 22
	36 – 22
6JD–45321–00	34 – 14
	36 – 14
6AW–45332–00	34 – 69
6AX–45332–00	36 – 70
6AW–45335–00–CA	34 – 38
	36 – 38
688–45341–10	34 – 8
	36 – 8
6KA–45344–00	34 – 47
	36 – 47
6CE–45373–00	1 – 19
	35 – 18
	37 – 18
6JD–45375–00	34 – 11
	36 – 11
61A–45376–00	34 – 10
	36 – 10
63P–45378–00	32 – 47
	34 – 12
	36 – 12
63P–45379–00	32 – 42
6AW–45383–00	34 – 79
	36 – 79
6AW–45384–00	34 – 80
	36 – 80
6JD–45501–00	34 – 49
	36 – 49
6JD–45501–10	34 – 49
	36 – 49
6JD–45524–00	34 – 21
	36 – 21
6T5–45539–00	34 – 50
	36 – 50
6JD–45550–00	34 – 52
6JE–45550–00	36 – 52
6JE–45560–00	36 – 55
6AW–45567–00	34 – 6
	36 – 6
6AW–45567–10	34 – 6
	36 – 6
6AW–45567–20	34 – 6
	36 – 6
6AW–45567–30	34 – 6
	36 – 6
6AW–45567–40	34 – 6

PART NO. N° PIECES	REF. NO.
6AW–45567–40	36 – 6
6AW–45567–50	34 – 6
	36 – 6
6AW–45571–00	34 – 72
6AW–45576–00	34 – 71
	36 – 72
6AW–45577–00	34 – 73
	36 – 73
6AW–45577–10	34 – 73
	36 – 73
6AW–45577–20	34 – 73
	36 – 73
6AW–45577–30	34 – 73
	36 – 73
6AW–45577–40	34 – 73
	36 – 73
6AW–45577–50	34 – 73
	36 – 73
6AW–45577–60	34 – 73
	36 – 73
6K1–45578–01	36 – 69
6K1–45578–10	36 – 69
6K1–45578–20	36 – 69
6K1–45578–30	36 – 69
6K1–45578–40	36 – 69
6K1–45578–50	36 – 69
6K1–45578–60	36 – 69
6AW–45587–00	34 – 41
	36 – 41
6AW–45587–10	34 – 41
	36 – 41
6AW–45587–20	34 – 41
	36 – 41
6AW–45587–30	34 – 41
	36 – 41
6AW–45587–40	34 – 41
	36 – 41
6AW–45587–50	34 – 41
	36 – 41
6AW–45587–60	34 – 41
	36 – 41
6AW–45611–00	34 – 56
6JE–45611–00	36 – 56
6AW–45612–00	34 – 68
6AW–45631–00	34 – 60
	36 – 60
6AW–45632–00	34 – 59
	36 – 59

PART NO. N° PIECES	REF. NO.
6AW–45633–00	34 – 61
	36 – 61
61A–45634–01	34 – 58
	36 – 58
61A–45635–00	34 – 63
	36 – 63
6JD–45641–00	34 – 57
6JE–45641–00	36 – 57
6H1–45668–00	34 – 62
	36 – 62
6JD–45860–00	34 – 20
	36 – 20
6AW–45930–20	35 – 28
6AX–45930–20	37 – 28
6AW–45970–20	35 – 28
6AX–45970–20	37 – 28
6AW–45972–20	35 – 28
6AX–45972–20	37 – 28
6AW–45974–20	35 – 28
6AX–45974–20	37 – 28
6AW–45976–20	35 – 28
6AX–45976–20	37 – 28
6AW–45978–20	35 – 28
6AX–45978–20	37 – 28
6AW–45987–00	35 – 23
	37 – 23
6AW–45997–00	35 – 24
	37 – 24
6AW–45B70–20	35 – 30
6AX–45B70–20	37 – 30
6AW–45B72–20	35 – 30
6AX–45B72–20	37 – 30
6AW–45B74–20	35 – 30
6AX–45B74–20	37 – 30
6AW–45B76–20	35 – 30
6AX–45B76–20	37 – 30
6AW–45C81–10	35 – 29
	35 – 31
	37 – 29
	37 – 31
6ML–4820A–00	27 – 1
6Y8–48277–00	40 – 16
6E5–61303–01	39 – 5
6E5–61310–00	39 – 1
6E5–61311–11	39 – 3
6E5–61313–00	39 – 2
6E5–61315–00	39 – 4
6E5–61350–02	38 – 1

PART NO. N° PIECES	REF. NO.
6E5–61351–01	38 – 2
6E5–61355–00	38 – 5
6CE–68303–00	27 – 27
6Y8–81315–04	40 – 17
6P2–81336–01	20 – 33
6CE–81337–01	17 – 12
6CE–81410–00	17 – 3
6CB–81443–00	22 – 6
6CB–81639–10	20 – 27
6CE–81800–02	23 – 1
6CE–81801–01	23 – 5
6CE–81807–00	23 – 8
6CB–81809–00	23 – 14
6CE–81810–00	23 – 3
67F–81813–00	23 – 6
6CE–81820–00	23 – 7
6CE–81821–00	23 – 11
6CB–81822–02	22 – 4
6CB–81823–B0	22 – 8
6CB–81826–00	23 – 22
69J–81828–00	23 – 23
6CE–81830–00	23 – 16
6CB–81832–00	23 – 9
6CB–81836–00	23 – 10
6CE–81839–00	23 – 19
67F–8183R–00	23 – 13
60V–8183T–00	23 – 17
6P2–8183X–00	20 – 18
6CE–81840–01	23 – 4
67F–81841–00	23 – 12
6CE–81842–00	23 – 18
6BR–81845–00	18 – 7
67F–81846–00	23 – 24
6CE–81850–00	23 – 2
6CE–81869–00	23 – 21
67F–81891–00	23 – 15
6CE–81919–21	20 – 35
6CB–81923–00	20 – 36
6P2–81925–01	20 – 1
6CB–81929–00	20 – 4
6C5–81941–01	23 – 20
6CB–81948–02	20 – 8
6KW–81949–00	22 – 13
6CB–81952–00	21 – 34
6AW–8195A–00	20 – 22
6CE–81960–10	18 – 11
6CE–81972–00–9S	18 – 12
6CE–81975–00	18 – 13

PART NO. N° PIECES	REF. NO.
6CE–81980–01	21 – 2
6EE–81994–41	17 – 19
6EE–81994–51	17 – 20
6AH–81996–01	24 – 36
6CB–82105–03	20 – 39
6P2–82113–00	20 – 30
69J–82147–00	28 – 28
6E5–82148–00	28 – 8
6H1–82148–00	28 – 6
6AW–82149–00	29 – 16
67F–82151–00	20 – 25
6CE–82151–00	20 – 21
6Y8–82151–00	40 – 19
6TA–82151–01	40 – 18
67F–82151–10	20 – 26
67F–82151–40	20 – 23
67F–82151–50	20 – 24
6CE–82170–11	20 – 20
6CB–82310–02	19 – 1
6CB–82314–00	19 – 3
6CB–82316–01	18 – 3
6P2–82380–00	11 – 5
6CB–82388–00	21 – 17
6Y8–82509–10	40 – 8
6Y8–82521–11	40 – 15
6P2–82560–01	21 – 20
6BR–82563–01	21 – 25
69J–82587–01	21 – 27
6CE–82588–00	20 – 6
6E9–82588–00	21 – 21
6CB–82589–01	21 – 8
6CE–82590–1A	21 – 1
6CB–82594–00	21 – 4
6CE–8259M–01	22 – 12
6CE–825E0–02	41 – 1
68F–82846–00	20 – 29
6X4–83383–00	40 – 5
6X4–83386–00	40 – 6
6E5–83558–00	32 – 36
6DA–83614–00	21 – 29
63P–83614–01	21 – 28
6AW–83651–01	21 – 23
6AW–8366B–10	42 – 2
60V–8366D–00	42 – 3
69J–83672–13	29 – 1
6Y8–8454G–00	40 – 11
6P2–85075–00	19 – 6
64J–85516–01	18 – 4

PART NO. N° PIECES	REF. NO.
64J–85516–01	20 – 9
6CB–85516–01	17 – 17
6CB–85544–00	20 – 28
6CB–85547–00	9 – 10
689–85547–01	15 – 1
6CB–85561–00	17 – 5
6CE–85564–00	27 – 6
6CB–85580–01	17 – 4
6ML–85592–00	17 – 8
6P2–85780–01	6 – 11
6CB–85790–00	21 – 19
63P–85886–00	21 – 31
6P2–85896–00	19 – 5
6JD–8591A–01	18 – 1
6C5–86120–00	10 – 3
6CB–86120–00	6 – 1
6Y8–86260–03	40 – 2
6AA–86261–01	40 – 3
6Y8–86267–00	40 – 1
60V–8A4L1–1C	42 – 1
K0F–A3233–00	4 – 15
K0F–A3741–00	8 – 5
K0F–A3742–00	8 – 6
K0F–A3743–00	8 – 3
K0F–A3751–00	8 – 8
K0F–A3751–10	8 – 8
K0F–A3751–20	8 – 8
K0F–A3751–30	8 – 8
K0F–A3751–40	8 – 8
K0F–A3751–50	8 – 8
K0F–A3751–60	8 – 8
K0F–A3751–70	8 – 8
K0F–A3751–80	8 – 8
K0F–A3751–90	8 – 8
K0F–A3751–A0	8 – 8
K0F–A3751–B0	8 – 8
K0F–A3751–C0	8 – 8
K0F–A3751–D0	8 – 8
K0F–A3751–E0	8 – 8
K0F–A3751–F0	8 – 8
K0F–A3751–G0	8 – 8
K0F–A3751–H0	8 – 8
K0F–A3751–J0	8 – 8
K0F–A3751–K0	8 – 8
K0F–A3751–L0	8 – 8
K0F–A3751–M0	8 – 8
K0F–A3751–N0	8 – 8
K0F–A3751–P0	8 – 8

PART NO. N° PIECES	REF. NO.
K0F–A3751–R0	8 – 8
K0F–A3751–S0	8 – 8
K0F–A3751–T0	8 – 8
K0F–A3753–00	8 – 8
K0F–A3753–10	8 – 8
K0F–A3753–20	8 – 8
K0F–A3753–30	8 – 8
K0F–A3753–40	8 – 8
K0F–A3753–50	8 – 8
K0F–A3753–60	8 – 8
K0F–A3753–70	8 – 8
6CB–W0001–05	43 – 1
6JD–W0001–21	44 – 1
6JD–W0078–00	1 – 20
	44 – 27
6JD–W009A–12–9S	5 – 1
6JD–W009C–12–9S	5 – 11
6CB–W1165–10	4 – 9
6CB–W4624–00	8 – 27
6CE–W8145–01	17 – 1
6AW–W8195–10	20 – 15
6EK–W9010–00	17 – 2
6P3–WS24B–21	15 – 8
90101–09M70	39 – 9
90101–12065	28 – 43
90101–12066	28 – 43
90101–14004	29 – 17
90105–06035	6 – 3
	9 – 4
90105–06037	3 – 28
	3 – 45
	6 – 7
90105–06039	25 – 34
90105–06151	3 – 18
	3 – 40
	22 – 9
90105–06M07	3 – 13
	5 – 22
90105–08175	3 – 7
	5 – 28
90105–08178	6 – 5
90105–08220	5 – 29
90105–08M87	22 – 5
90105–10M00	35 – 19
	37 – 19
90105–14005	29 – 27
90109–06277	5 – 33
	5 – 37

PART NO. N° PIECES	REF. NO.
90109–06M80	26 – 14
90109–06M81	42 – 4
90111–06142	26 – 4
	26 – 7
90111–06144	26 – 3
	26 – 8
90111–08078	2 – 7
90116–10067	35 – 9
	37 – 9
90119–06047	12 – 9
90119–06287	32 – 43
90119–06291	25 – 33
90119–06293	18 – 6
	20 – 11
90119–06299	9 – 2
90119–06309	9 – 20
	15 – 14
90119–06MA3	18 – 14
90119–07001	5 – 5
	5 – 15
90119–07234	5 – 6
	5 – 16
90119–08020	9 – 3
90119–08168	27 – 3
90119–08180	34 – 17
	36 – 17
90119–08182	32 – 4
90119–08187	24 – 21
90119–08191	34 – 37
	36 – 37
	44 – 37
90119–10007	32 – 27
90119–10008	35 – 12
	37 – 12
90119–10009	35 – 13
	37 – 13
90119–10024	28 – 25
	29 – 21
	29 – 33
	35 – 9
	37 – 9
90119–10050	8 – 18
90119–10M07	8 – 31
90149–11001	5 – 27
90151–05M05	3 – 33
90151–06M02	3 – 11
	3 – 20
	32 – 3

PART NO. N° PIECES	REF. NO.
90152–05003	35 – 16
	37 – 16
90159–05059	41 – 3
90159–06053	26 – 11
90167–06M00	40 – 12
90170–09M05	39 – 10
90170–14M06	39 – 6
90170–30M18	34 – 45
	36 – 45
90171–18M04	35 – 26
	37 – 26
90173–06001	26 – 9
90179–06M28	5 – 41
90179–08003	22 – 2
90179–18009	34 – 54
	36 – 54
90183–02M03	34 – 65
	36 – 65
90183–061A8	26 – 10
90185–05002	35 – 17
	37 – 17
90185–06M07	5 – 45
	27 – 12
90185–09M01	38 – 6
	39 – 11
90185–14M00	29 – 18
	29 – 28
90185–22M11	28 – 21
90201–02M00	34 – 64
	36 – 64
90201–06068	27 – 11
90201–06M02	32 – 40
90201–06M30	40 – 13
90201–10M01	8 – 32
90201–10M20	38 – 7
90201–10M76	39 – 8
90201–11008	27 – 24
90201–12064	27 – 4
90201–12426	28 – 45
90201–13M01	28 – 44
90201–156J2	24 – 11
90201–16032	29 – 15
90201–18023	34 – 53
	36 – 53
90201–186F1	5 – 8
	5 – 18
90201–19M01	35 – 25
	37 – 25

PART NO. N° PIECES	REF. NO.
90201–26M59	28 – 20
90201–301U7	34 – 43
	36 – 43
90201–35015	34 – 55
90201–40M00	29 – 6
90201–68008	34 – 40
	36 – 40
90202–08M41	27 – 10
90202–40M47	29 – 9
90206–15M18	24 – 12
90214–30003	34 – 44
	36 – 44
90249–06M19	28 – 35
90280–04002	34 – 33
	36 – 33
	44 – 33
90282–05008	34 – 78
	36 – 78
90340–08002	34 – 7
	36 – 7
90340–14M06	5 – 9
	33 – 4
90340–18M09	5 – 7
	5 – 17
90386–08008	27 – 2
90386–10001	27 – 25
90386–10M16	28 – 33
90386–11001	27 – 22
90386–15M73	24 – 10
90386–18M14	28 – 41
	30 – 24
90386–18M63	28 – 40
90386–25M31	28 – 19
90386–39M89	29 – 7
90387–05004	41 – 4
90387–06285	17 – 14
90387–06289	9 – 19
	15 – 16
90387–06M03	25 – 32
90387–06M43	26 – 13
90387–07028	26 – 6
90387–08104	27 – 5
90387–08M37	24 – 20
90387–08M45	2 – 10
90387–10094	2 – 8
90387–10M05	28 – 36
90387–10M61	38 – 3
90387–11005	5 – 26

PART NO. N° PIECES	REF. NO.
90387–28013	29 – 26
90401–19001	3 – 37
90430–06M03	5 – 23
90430–08003	1 – 18
	34 – 9
	36 – 9
	44 – 14
90430–14115	5 – 10
90430–14M09	1 – 17
	33 – 5
	44 – 2
90445–07017	42 – 6
90445–07032	32 – 38
90445–09068	18 – 29
90445–09220	7 – 1
90445–096H2	7 – 10
90445–097F7	10 – 10
90445–107A5	18 – 19
90445–14019	25 – 23
90445–14021	25 – 14
90445–16015	25 – 16
90446–15003	29 – 34
90446–15006	20 – 19
90447–07013	42 – 7
90462–06013	18 – 21
90462–10061	32 – 41
90464–06001	21 – 6
90464–07209	10 – 21
90464–07M20	10 – 36
90464–08004	11 – 9
90464–09013	7 – 5
	10 – 16
90464–09129	21 – 33
90464–10011	10 – 35
90464–10M59	7 – 4
90464–11012	10 – 33
90464–11121	21 – 13
90464–12009	14 – 15
90464–12010	7 – 6
	10 – 14
	10 – 34
90464–12012	14 – 16
	14 – 17
	15 – 5
90464–12183	20 – 13
	21 – 15
90464–13227	22 – 10
90464–13249	9 – 21

PART NO. N° PIECES	REF. NO.
90464–13249	18 – 9
	20 – 12
90464–16001	21 – 24
	25 – 28
90464–18004	22 – 11
90464–18246	21 – 14
90464–20181	9 – 22
	10 – 20
	18 – 10
	20 – 14
	21 – 3
	21 – 16
90464–20258	24 – 33
90464–23001	10 – 6
90464–26002	7 – 9
	10 – 15
	18 – 23
90464–99004	9 – 12
90465–08M83	28 – 16
	28 – 23
90465–11M10	7 – 7
	7 – 11
	10 – 7
	10 – 13
	15 – 6
	15 – 19
	17 – 9
	18 – 31
	18 – 32
	18 – 33
	25 – 3
	25 – 24
	28 – 22
	29 – 35
	32 – 37
	40 – 10
	41 – 5
	42 – 5
90465–11M59	7 – 16
90465–13M18	41 – 6
90465–13M24	21 – 7
90465–14M66	7 – 17
	14 – 14
90467–08M18	18 – 20
	18 – 34
90467–090A0	10 – 12
90467–09M09	10 – 8
90467–130A5	25 – 25

PART NO. N° PIECES	REF. NO.
90467–140A8	25 – 26
90467–140A9	14 – 13
	25 – 27
90467–141A2	14 – 3
90468–18008	27 – 13
	27 – 17
90480–10M23	9 – 18
	15 – 15
90480–12314	17 – 16
	19 – 4
90480–13M24	26 – 12
90480–14029	25 – 31
90480–15M31	17 – 15
90480–16009	26 – 5
90480–22M81	24 – 19
90501–10M77	34 – 66
	36 – 66
90501–127J4	34 – 23
	36 – 23
90506–16003	28 – 38
90506–22001	24 – 16
90560–12M01	38 – 4
91318–05025	30 – 59
91318–05040	30 – 64
91490–40030	35 – 27
	37 – 27
91690–30020	28 – 37
91690–40010	3 – 16
91809–08006	5 – 4
	5 – 14
92990–06100	2 – 14
92990–06200	2 – 5
92990–08600	2 – 9
92995–10600	35 – 10
	37 – 10
92995–14600	29 – 19
	29 – 29
93101–12M70	34 – 16
	36 – 16
	44 – 17
93101–28019	34 – 39
	36 – 39
	44 – 23
93101–35019	34 – 76
	36 – 76
	44 – 25
93102–38008	8 – 26
	43 – 11

NUMERICAL INDEX
INDEX NUMERIQUE

PART NO. N° PIECES	REF. NO.
93102–85008	4 – 4
	43 – 10
93104–22M07	34 – 25
	36 – 25
	44 – 18
	44 – 28
93106–19001	30 – 5
93210–04279	40 – 9
93210–064A5	30 – 51
93210–07003	32 – 48
	34 – 13
	36 – 13
	44 – 15
93210–08391	30 – 48
93210–09165	27 – 21
	30 – 72
93210–16275	38 – 9
93210–17239	30 – 22
93210–19MJ3	33 – 20
	44 – 4
93210–24M79	3 – 42
	43 – 17
93210–26658	3 – 8
	33 – 15
	43 – 6
	43 – 14
93210–27370	3 – 44
	43 – 18
93210–35321	29 – 8
93210–37160	34 – 29
	36 – 29
	44 – 20
	44 – 31
93210–58144	34 – 15
	36 – 15
	44 – 16
93210–66001	30 – 69
93210–69MG6	34 – 46
	36 – 46
	44 – 24
93210–94003	34 – 28
	36 – 28
	44 – 19
	44 – 30
93211–10232	34 – 77
	36 – 77
	44 – 26
93306–21101	34 – 70

PART NO. N° PIECES	REF. NO.
93311–63591	34 – 74
	36 – 74
93311–93590	34 – 3
	36 – 3
93332–000A2	36 – 71
93340–67011	34 – 4
	36 – 4
93341–440U5	36 – 68
93390–00031	34 – 5
	36 – 5
93399–99962	34 – 42
	36 – 42
93410–10082	27 – 26
93410–18M05	28 – 42
93410–36102	29 – 11
93420–36M01	32 – 33
93501–04011	34 – 67
	36 – 67
93501–08001	30 – 47
93503–16003	30 – 37
93505–32038	30 – 13
	30 – 34
93604–07M13	27 – 19
93604–35236	30 – 60
93605–10108	8 – 10
	8 – 12
	8 – 14
	8 – 16
93606–12019	3 – 3
	3 – 4
	4 – 3
	34 – 36
	36 – 36
	44 – 36
93606–19002	28 – 2
93606–19M23	32 – 22
93608–16M16	32 – 7
	32 – 28
	32 – 46
	33 – 3
	35 – 8
	37 – 8
93700–06002	28 – 15
	28 – 27
94702–00400	1 – 8
	5 – 46
95022–06035	17 – 10
95023–06012	18 – 22

PART NO. N° PIECES	REF. NO.
95027–06025	3 – 27
95380–06600	2 – 15
	10 – 4
95380–10600	35 – 11
	37 – 11
95380–12600	28 – 46
95380–14700	39 – 7
95780–06300	40 – 14
95780–08300	2 – 11
95780–10300	29 – 4
95812–06025	33 – 8
95814–08020	20 – 3
95D75–06025	27 – 23
	27 – 28
95D75–06040	33 – 14
95D75–08030	9 – 1
95D75–08060	11 – 4
95D95–06010	32 – 35
95D95–06012	18 – 8
	21 – 5
	21 – 22
	21 – 30
	24 – 18
	24 – 27
	24 – 29
	24 – 31
95D95–06014	5 – 39
	15 – 21
	24 – 4
95D95–06016	6 – 9
	10 – 18
	15 – 17
	20 – 7
	21 – 18
	21 – 35
	22 – 7
	25 – 12
	33 – 21
95D95–06020	18 – 2
	20 – 5
	21 – 12
	32 – 10
95D95–06025	9 – 13
	17 – 13
	18 – 15
	19 – 2
95D95–06030	5 – 32
	5 – 36

PART NO. N° PIECES	REF. NO.
95D95–06030	17 – 11
95D95–08012	24 – 15
95D95–08016	20 – 2
	20 – 37
	20 – 38
95D95–08025	5 – 24
97513–06520	20 – 17
97513–08545	22 – 1
97585–06510	28 – 24
97595–05520	17 – 7
97602–04306	31 – 6
97602–04308	31 – 9
97780–50620	20 – 32
97780–60516	2 – 4
97780–60520	25 – 22
97780–60620	40 – 7
97880–06035	40 – 12
97885–06010	28 – 11
	28 – 14
97980–06216	40 – 4
97985–04308	22 – 3
97985–06212	28 – 9
	28 – 17
97985–06216	29 – 2
97D95–06010	32 – 39
97D95–06012	32 – 31
97E75–06525	27 – 15
97E75–06620	11 – 6
97E75–08535	32 – 21
	33 – 2
97E75–08560	32 – 15
97E75–10535	32 – 6
97E75–10545	32 – 5
97E75–10570	35 – 13
	37 – 13
97E95–06510	28 – 7
97E95–06512	28 – 30
97E95–06516	9 – 17
	20 – 34
	41 – 2
	42 – 9
97E95–06520	19 – 7
97E95–06525	28 – 5
97E95–06610	20 – 16
97E95–08520	34 – 48
	36 – 48
98507–04008	13 – 38
98780–06530	3 – 31

PART NO. N° PIECES	REF. NO.
98780–06550	3 – 35
99002–03600	30 – 40
99009–47500	34 – 75
	36 – 75
99530–08012	17 – 6
99530–14016	8 – 30