YAMAHA

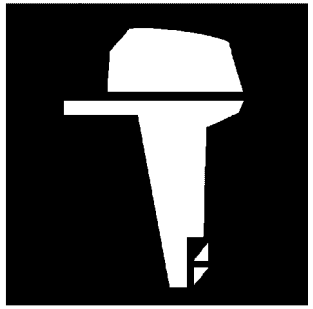

PARTS CATALOGUE
CATALOGUE DE PIECES DETACHEES

F8MHB-2026 (6FWD)
F8EB-2026 (6FWD)
F8FMH'26 (6FWD)

YAMAHA
GENUINE
Parts & Accessories

316FW-300F1

( )

F8MHB
F8EB/F8FMH
PARTS CATALOGUE
©2026 by Yamaha Motor Co., Ltd.
1st edition, April 2026
All rights reserved.
Any reprinting or unauthorized use
without the written permission of
Yamaha Motor Co., Ltd.
is expressly prohibited.
Printed in Japan.

F8MHB
F8EB/F8FMH
CATALOGUE DE PIECES DETACHEES
©2026 par Yamaha Motor Co., Ltd.
1re édition, avril 2026
Tous droits réservés
Toute réimpression ou utilisation
non autorisée sans la permission écrite
de Yamaha Motor Co., Ltd.
est formellement interdite.
Imprimé au Japon

FOREWORD

This Parts Catalogue is related to the parts for the model(s) on the cover page. When you are ordering replacement parts, please refer to this Parts Catalogue and quote both part numbers and part names correctly.

1. Modifications or additions which have been made after the issue of the Parts Catalogue will be announced in the Parts News.
   It is advisable that you make the necessary corrections to the Parts Catalogue according to the Parts News.

2. Abbreviations
   The following abbreviations are used in this Parts Catalogue.
   "UR" Use specified parts number.
   "UN" Use as many as needed.
   "AP" Alternate Parts
   "LM" Locally Made (Parts need to be ordered locally)
   "F#" Frame No. (Applicable machine No.)
   "O/S" Over Size

3. The number of components for assembly
   - Parts, which are to be supplied in an assembly, are listed with a dot (.) in front of the part name as shown below.
   - The numeral appearing to the right of each component part indicates the quantity of parts for each assembly unit.

PART NO.	DESCRIPTION	Q'TY	REMARKS
2F5–83310–60	FRONT FLASHER LIGHT ASSY	2	
115–83311–60	.BULB (6V–18W)	1	

4. Applicable colours of graphics are represented in the "REMARKS" as shown below.

PART NO.	DESCRIPTION	Q'TY	REMARKS
2N4–24110–00–X5	FUEL TANK COMP.	2	MXR
3J1–24240–10	.GRAPHIC, FUEL TANK	1	FOR MXR

5. Note that the illustrations for reference in finding parts numbers are not to be used for assembling. When assembling, please use the applicable service manual.

6. The asterisk (*) before a reference number indicates modified items after the first edition.

7. Applicable Serial No.
   Engine Serial No.

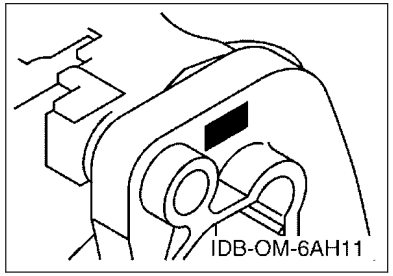

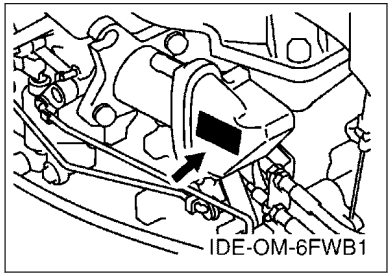

8. Applicable Engine Starting Serial No.

Model	Serial No.	Model	Serial No.
F8B	6FWK-1025417	F8F	6FWK-1025417

9. Applicable Colour Code

Abbreviation	Colour Name	Colour Code
DBN1	DARK BLUISH GRAY 1	008D

10. Quantity Column Information

Column No.	Name Of Q'ty Column	Applicable Model
1	MH	F8MHB,F8FMH
2	E	F8EB

AVANT–PROPOS

Ce catalogue de pièces détachées concerne les pièces pour le(s) modèle(s) indiqué(s) sur la page de couverture. Lorsque vous commandez des pièces de rechange, veuillez vous référer à ce catalogue de pieces détachées et indiquer clairement les numéros et les noms des pièces détachées.

1. Les modifications ou ajouts ayant été effectués après la parution du catalogue de pièces détachées seront décrits dans les Bulletins d'information concernant les pièces détachées.
   Il est recommandé que vous apportiez les corrections nécessaires au catalogue des pièces détachées en vous référant aux Bulletins d'information.

2. Abréviations
   Dans ce catalogue, les abréviations suivantes sont utilisées:
   "UR" Utiliser le numéro de pièces spécifié.
   "UN" Utiliser autant que nécessaire.
   "AP" Pièces de substitution
   "LM" Fabrication locale (les pièces doivent être commandées localement.)
   "F#" N° de cadre (applicable au N° de série)
   "O/S" Surdimensionné

3. Nombre de pièces d'un assemblage
   - Les pièces fournies comme composants d'un assemblage sont précédées d'un point (.) de la manière indiquée ci–dessous.
   - Le chiffre apparaissant à la droite de chaque composant indique la quantité de pièces pour chaque unité d'assemblage.

N° PIECES	DESCRIPTION	QTE	REMARQUES
2F5–83310–60	ENS. CLIGNOTANT AVANT	2	
115–83311–60	.AMPOULE (6V–18W)	1	

4. Les couleurs concernant les graphiques sont indiquées dans la colonne "REMARQUES", comme indiqué ci–dessous.

N° PIECES	DESCRIPTION	QTE	REMARQUES
2N4–24110–00–X5	RESERVOIR A ESSENCE.	2	MXR
3J1–24240–10	.GRAPHIQUE	1	POUR MXR

5. Veuillez noter que les illustrations sont indiquées à titre de référence pour trouver les numéros de pièces, non pour être utilisées lors de l'assemblage. Lors de l'assemblage, veuillez utiliser le manuel d'entretien adéquat.

6. L'astérisque (*) placé devant un numéro de référence indique des éléments qui ont été modifiés après la première édition.

7. N° de série applicable
   N° de Série du moteur

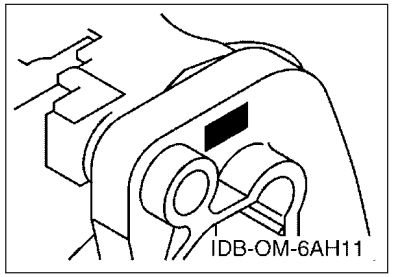

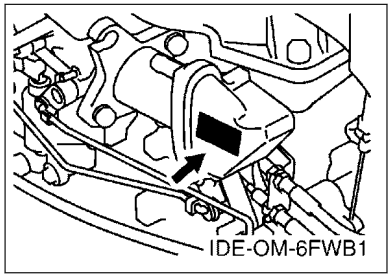

8. N° de série initial du moteur applicable

Modèle	N° de série	Modèle	N° de série
F8B	6FWK-1025417	F8F	6FWK-1025417

9. Code couleur applicable

Abréviation	Nom de la couleur	Code couleur
DBN1	DARK BLUISH GRAY 1	008D

10. Informations relatives à la colonne Quantité

N° de la colonne	Nom de la colonne Qté	Modèle applicable
1	MH	F8MHB,F8FMH
2	E	F8EB

CONTENTS

SCHEDULED SERVICE PARTS....1
TOP COWLING....2
CYLINDER & CRANKCASE 1....3
CRANKSHAFT & PISTON....4
CYLINDER & CRANKCASE 2....5
VALVE....6
INTAKE....7
CARBURETOR....9
OIL PUMP....10
FUEL....11
STARTER....13
GENERATOR....15
ELECTRICAL 1....16
ELECTRICAL 2....17
STARTING MOTOR....18
BOTTOM COWLING....20
STEERING....22
STEERING FRICTION....24
CONTROL 1....25
CONTROL 2....27
REMO CON ATTACHMENT....29
BRACKET 1....30
BRACKET 2....32
UPPER CASING....33
OIL PAN....34
LOWER CASING & DRIVE 1....35
LOWER CASING & DRIVE 2....38
FUEL TANK....39
STEERING GUIDE....40
REMOTE CONTROL BOX....41
REMOTE CONTROL ASSY....42
OPTIONAL PARTS 1....45
OPTIONAL PARTS 2....47
OPTIONAL PARTS 3....48
REPAIR KIT 1....49
REPAIR KIT 2....50
REPAIR KIT 3....51

INDEX

NUMERICAL INDEX....52

TABLE DES MATIERES

PIECES MAINTENANCE PERIODIQUE.....1
CAPOT SUPERIEUR..... 2
CYLINDRE & CARTER 1..... 3
VILEBREQUIN & PISTON.....4
CYLINDRE & CARTER 2..... 5
SOUPAPE..... 6
ADMISSION.....7
CARBURATEUR..... 9
POMPE A HUILE.....10
CARBURANT..... 11
DEMARREUR.....13
GENERATRICE.....15
PARTIE ELECTRIQUE 1.....16
PARTIE ELECTRIQUE 2.....17
DEMARREUR ELECTRIQUE.....18
CAPOT INFERIEUR.....20
DIRECTION.....22
CUVETTE POIGNEE DE DIRECTION.....24
COMMANDE 1..... 25
COMMANDE 2..... 27
COMMANDE A DISTANCE.....29
SUPPORT 1..... 30
SUPPORT 2..... 32
FOURREAU.....33
VENTILATEUR D'HUILE..... 34
BOITIER D'HELICE TRANSMISSION1.....35
BOITIER D'HELICE TRANSMISSION2.....38
RESERVOIR A CARBURANT.....39
FIXATION DE DIRECTION..... 40
BOITIER DE COMMANDE A DISTANCE..... 41
BOITIER DE COMMANDE A DISTANCE..... 42
PIECES OPTIONNELLES 1.....45
PIECES OPTIONNELLES 2.....47
PIECES OPTIONNELLES 3.....48
KITS DE REPARATION 1..... 49
KITS DE REPARATION 2..... 50
KITS DE PEPARATION 3.....51

INDEX

INDEX NUMERIQUE.....52

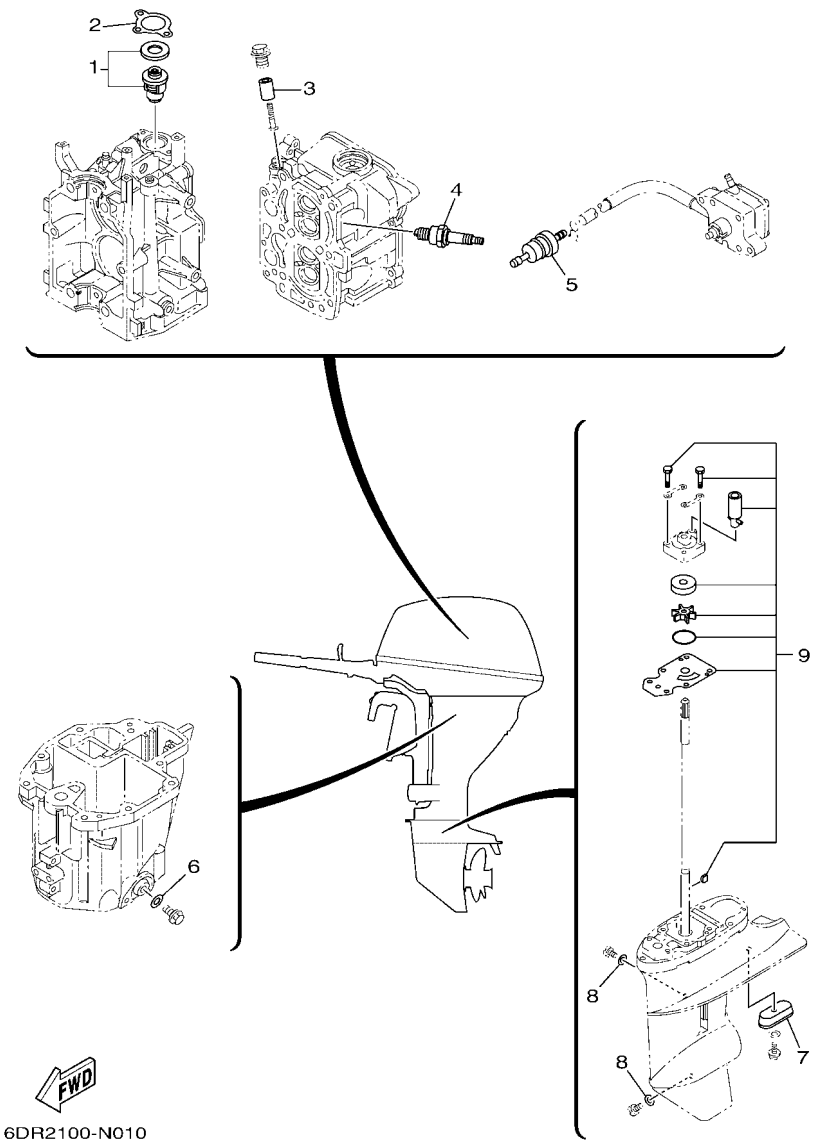

FIG. 1 SCHEDULED SERVICE PARTS — PIECES MAINTENANCE PERIODIQUE

REF. NO.	PART NO. N° PIECES	DESCRIPTION DESCRIPTION	MH	E				REMARKS REMARQUES
1	66M–12411–01	THERMOSTAT THERMOSTAT	1	1				
2	6G8–12414–A0	GASKET, COVER JOINT, COUVERCLE	1	1				
3	6G8–11325–00	ANODE ANODE	1	1				
4	94702–00274	PLUG, SPARK (NGK BR6HS-10) BOUGIE D'ALLUMAGE(NGK BR6HS-10	2	2				
5	68T–24251–01	STRAINER 1 FILTRE 1	1	1				
6	90430–10M11	GASKET JOINT	1	1				
7	68T–45251–00	ANODE ANODE	1	1				
8	90430–08003	GASKET JOINT	2	2				
9	68T–W0078–02	WATER PUMP REPAIR KIT KIT DE REPARATION DE LA POMPE	1	1				

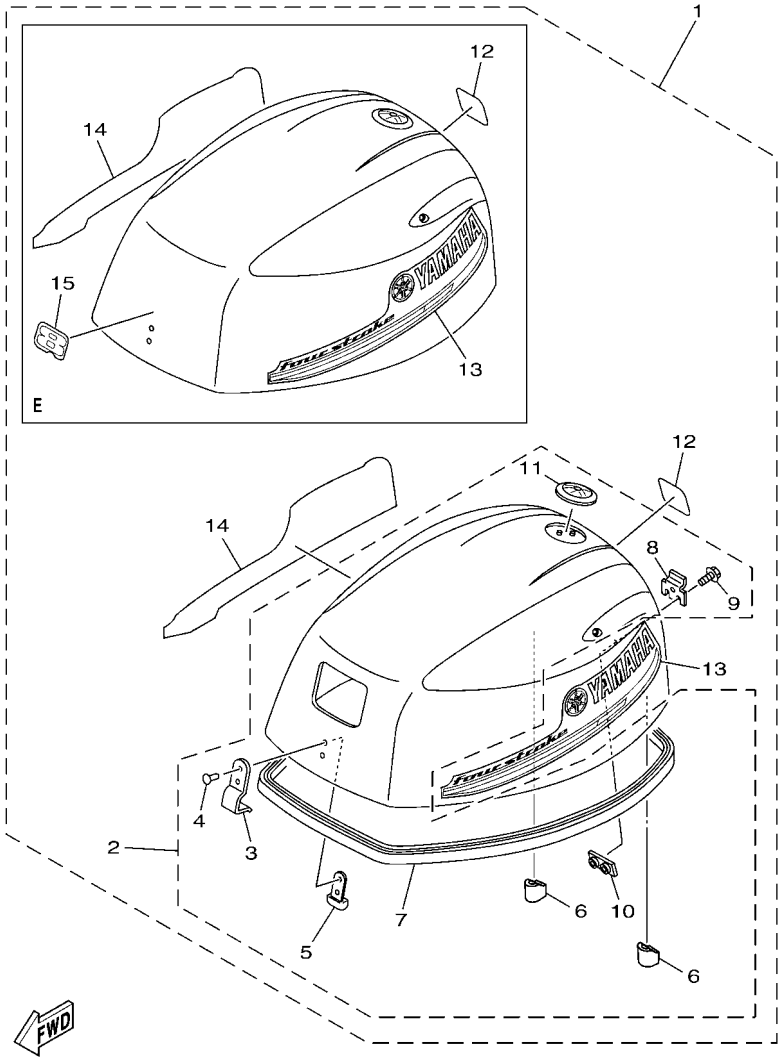

6FW3300-R020

FIG. 2 TOP COWLING — CAPOT SUPERIEUR

REF. NO.	PART NO. N° PIECES	DESCRIPTION DESCRIPTION	MH	E				REMARKS REMARQUES
1	6FW–42610–02	TOP COWLING ASSY CAPOT (ENS.)	1					
	6FW–42610–12	TOP COWLING ASSY CAPOT (ENS.)		1				
2	6DR–4261A–02	.TOP COWLING W/O GRAPHICS .CAPOT SUPERIEUR SANS GRAPHIQUE	1					
	6DR–4261A–12	.TOP COWLING W/O GRAPHICS .CAPOT SUPERIEUR SANS GRAPHIQUE		1				
3	6DR–42651–00	..HOOK ..CROCHET	1	1				
4	90266–04005	..RIVET ..RIVET	2	2				
5	6DR–42649–01	..HOLDER, CLAMP BAND ..SUPPORT, SANDOW DE SERRAGE	1	1				
6	6BG–42662–01	..DAMPER ..AMORTISSEUR	2	2				
7	60R–42615–00	..SEAL ..JOINT	1	1				
8	60R–42652–00	..HOOK ..CROCHET	1	1				
9	97595–05514	..BOLT, WITH WASHER ..VIS HEXAGONAL AVC RONDELLE	2	2				
10	68T–42649–00	..HOLDER, CLAMP BAND ..SUPPORT, SANDOW DE SERRAGE	1	1				
11	6AH–42697–10	..TUNING FORK MARK ..MARQUE, YAMAHA	1	1				
12	60R–42678–11	.GRAPHIC, REAR .ADHESIF, ARRIERE	1	1				
13	60R–42675–01	.GRAPHIC, SIDE 1 .EMBLEME	1	1				
14	60R–42676–11	.GRAPHIC, SIDE 2 .EMBLEME	1	1				
15	60R–42678–11	.GRAPHIC, REAR .ADHESIF, ARRIERE		1				

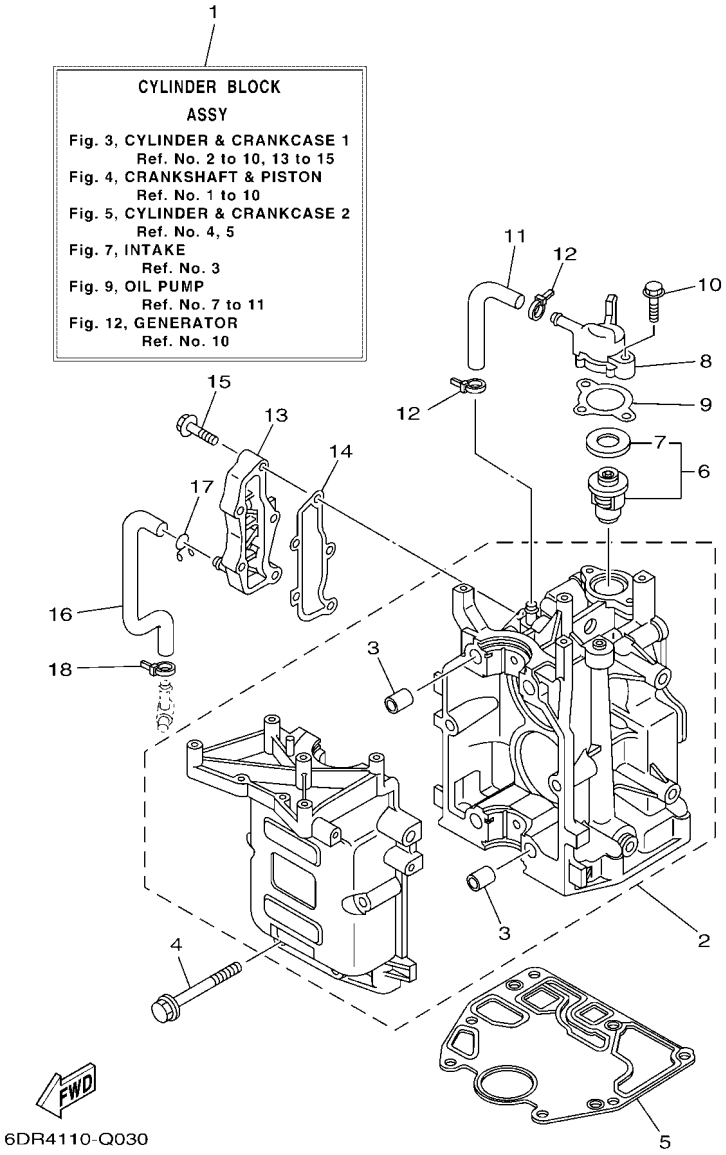

FIG. 3 CYLINDER & CRANKCASE 1 — CYLINDRE & CARTER 1

REF. NO.	PART NO. N° PIECES	DESCRIPTION DESCRIPTION	MH	E				REMARKS REMARQUES
1	6AU–W009B–00–1S	CYLINDER BLOCK ASSY CYLINDRE GROUPE (ENS.)	1	1				
2	6AU–15100–00	CRANKCASE ASSY CARTER DE MOTEUR COMPLET	1	1				
3	99530–12016	.PIN, DOWEL .GOUJON, D'ASSEMBLAGE	4	4				
4	90119–08M29	BOLT, WITH WASHER BOULON, AVEC RONDELLE	6	6				
5	68T–11351–00	GASKET, CYLINDER JOINT, D'EMBASE	1	1				
6	66M–12411–01	THERMOSTAT THERMOSTAT	1	1				
7	688–12412–00	.SEAL, THERMOSTAT .JOINT, THERMOSTAT	1	1				
8	68T–12413–00–1S	COVER, THERMOSTAT COUVERCLE, THERMOSTAT	1	1				
9	6G8–12414–A0	GASKET, COVER JOINT, COUVERCLE	1	1				
10	90119–06MA2	BOLT, WITH WASHER BOULON, AVEC RONDELLE	2	2				
11	68T–12481–00	PIPE 1 DURITE 1	1	1				
12	90465–11M10	CLAMP BRIDE	2	2				
13	6AU–41113–00–1S	OUTER COVER, EXHAUST COUVERCLE, ECHAPPEMENT	1	1				
14	68T–41114–A0	GASKET, EXHAUST OUTER COVER JOINT, COUVERCLE D'ECHAPPEMENT	1	1				
15	90119–06MA3	BOLT, WITH WASHER BOULON, AVEC RONDELLE	5	5				
16	68T–12482–00	PIPE 2 DURITE 2	1	1				
17	90467–10M04	CLIP JONC	1	1				
18	90465–11M10	CLAMP BRIDE	1	1				

FIG. 4 CRANKSHAFT & PISTON — VILEBREQUIN & PISTON

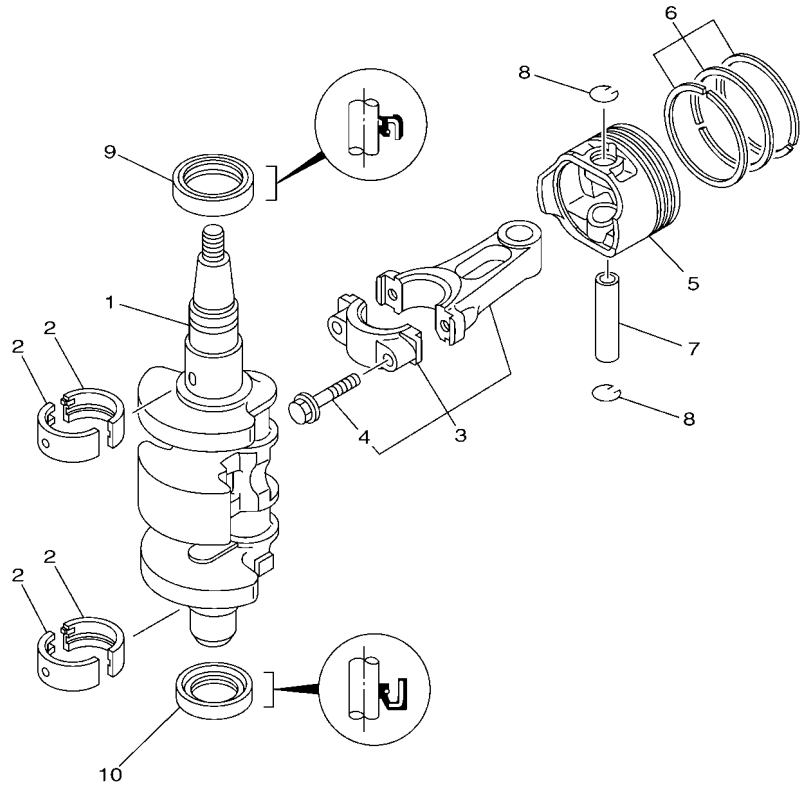

6DR1100-M040

REF. NO.	PART NO. N° PIECES	DESCRIPTION DESCRIPTION	MH	E				REMARKS REMARQUES
1	6AU–11411–00	CRANKSHAFT VILEBREQUIN COMPLET	1	1				
2	68T–11416–01	PLANE BEARING, CRANKSHAFT 1 COUSSINET DE VILEBREQUIN 1	4	4				UR BROWN UR BROWN
	68T–11416–11	PLANE BEARING, CRANKSHAFT 1 COUSSINET DE VILEBREQUIN 1	4	4				UR BLACK UR BLACK
	68T–11416–21	PLANE BEARING, CRANKSHAFT 1 COUSSINET DE VILEBREQUIN 1	4	4				UR BLUE UR BLUE
3	6AU–11650–00	CONNECTING ROD ASSY BIELLE COMPLETTE	2	2				
4	67D–11654–00	.BOLT, CONNECTING ROD .BOULON, BIELLE	2	2				
5	6AU–11631–00–96	PISTON (STD) PISTON (STD)	2	2				
	6AU–11635–00	PISTON (0.25MM O/S) PISTON (0.25MM O/S)	2	2				AP AP
	6AU–11636–00	PISTON (0.50MM O/S) PISTON (0.50MM O/S)	2	2				AP AP
6	68T–11603–01	PISTON RING SET (STD) JEU DE SEGMENTS (STD)	2	2				
	68T–11604–01	PISTON RING SET (0.25MM O/S) JEU DE SEGMENTS (0.25MM O/S)	2	2				AP AP
	68T–11605–01	PISTON RING SET (0.50MM O/S) JEU DE SEGMENTS (0.50MM O/S)	2	2				AP AP
7	68T–11633–00	PIN, PISTON AXE, PISTON	2	2				
8	93450–15023	CIRCLIP CIRCLIP	4	4				
9	93102–30M22	OIL SEAL JOINT SPY	1	1				
10	93101–25M69	OIL SEAL JOINT SPY	1	1				

FIG. 5 CYLINDER & CRANKCASE 2 — CYLINDRE & CARTER 2

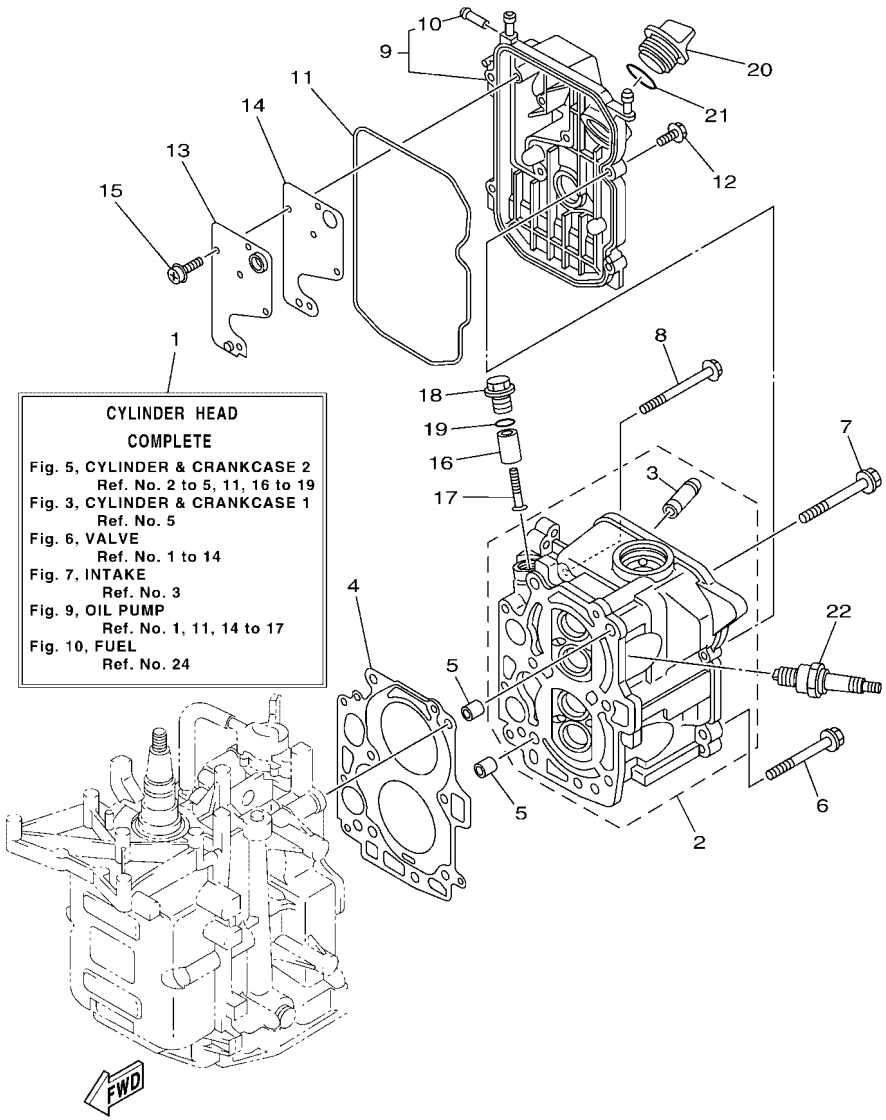

REF. NO.	PART NO. N° PIECES	DESCRIPTION DESCRIPTION	MH	E				REMARKS REMARQUES
1	6AU–W009A–02–1S	CYLINDER HEAD COMPLETE CULASSE (ENS.)	1	1				
2	6AU–11111–00–1S	HEAD, CYLINDER 1 CULASSE, 1	1	1				
3	6AU–11133–10	.GUIDE, VALVE 1 .GUIDE, SOUPAPE 1	4	4				
4	68T–11181–00	GASKET, CYLINDER HEAD 1 JOINT, DE CULASSE 1	1	1				
5	99530–10114	PIN, DOWEL GOUJON, D'ASSEMBLAGE	2	2				
6	90105–08M36	BOLT, FLANGE BOULON, A COLLERETTE	2	2				
7	90105–08M78	BOLT, FLANGE BOULON, A COLLERETTE	4	4				
8	90119–06049	BOLT, WITH WASHER BOULON, AVEC RONDELLE	3	3				
9	68T–11191–01–1S	COVER, CYLINDER HEAD 1 COUVERCLE, CULASSE 1	1	1				
10	650–24378–00	.PIPE, JOINT 4 .DURITE RACCORDEMENT 3	1	1				
11	68T–11356–00	SEAL, CYLINDER 2 JOINT, SPY CYLINDRE	1	1				
12	97E95–06520	BOLT, HEXAGON W/W DEEP RECESS VIS HEXAGONAL AVC RONDELLE	4	4				
13	68T–11168–00	COVER, BREATHER COUVERCLE, RENIFLARD	1	1				
14	68T–11169–A0	GASKET, BREATHER COVER JOINT, COUVERCLE DE RENIFLARD	1	1				
15	97607–04210	SCREW, WITH WASHER VIS, AVEC RONDELLE	5	5				
16	6G8–11325–00	ANODE ANODE	1	1				
17	98980–05025	SCREW, BIND VIS, DE PRESSION	1	1				
18	6G8–11197–B0	PLUG, BLIND PLOT, BORGNE	1	1				
19	93210–13M63	O-RING JOINT TORIQUE	1	1				
20	6G8–15363–00	PLUG, OIL PLOT, HUILE	1	1				
21	93210–24M79	O-RING JOINT TORIQUE	1	1				
22	94702–00274	PLUG, SPARK (NGK BR6HS-10) BOUGIE D'ALLUMAGE(NGK BR6HS-10	2	2				

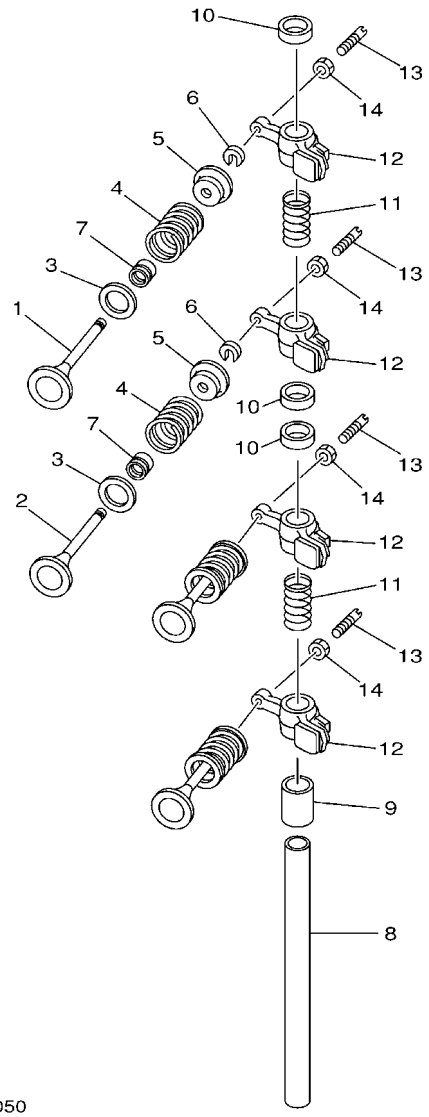

FIG. 6 VALVE SOUPAPE

REF. NO.	PART NO. N° PIECES	DESCRIPTION DESCRIPTION	MH	E				REMARKS REMARQUES
1	6AU–12111–00	VALVE, INTAKE SOUPAPE, ADMISSION	2	2				
2	6AU–12121–00	VALVE, EXHAUST SOUPAPE, ECHAPPEMENT	2	2				
3	68T–12116–00	SEAT, VALVE SPRING SIEGE, RESSORT DE SOUPAPE	4	4				
4	60R–12113–00	SPRING, VALVE INNER RESSORT DE SOUPAPE, INTERNE	4	4				
5	7NJ–12117–00	RETAINER, VALVE SPRING BUTEE DE RESSORT DE SOUPAPE	4	4				
6	7NJ–12118–00	LOCK, VALVE SPRING RETAINER FRAISE, SOUPAPE	4	4				
7	51Y–12119–00	SEAL, VALVE STEM JOINT, QUEUE DE SOUPAPE	4	4				
8	68T–12146–00	SHAFT, ROCKER AXE, CULBUTEUR	1	1				
9	90387–13M56	COLLAR COLLERETTE	1	1				
10	90387–14M03	COLLAR COLLERETTE	3	3				
11	90501–12M40	SPRING, COMPRESSION RESSORT, COMPRESSION	2	2				
12	68T–12151–00	ARM, VALVE ROCKER CULBUTEUR	4	4				
13	6G8–12159–00	SCREW, VALVE ADJUSTING VIS, REGLAGE DE SOUPAPE	4	4				
14	6G8–12158–00	NUT, LOCK CONTRE-ECROU	4	4				

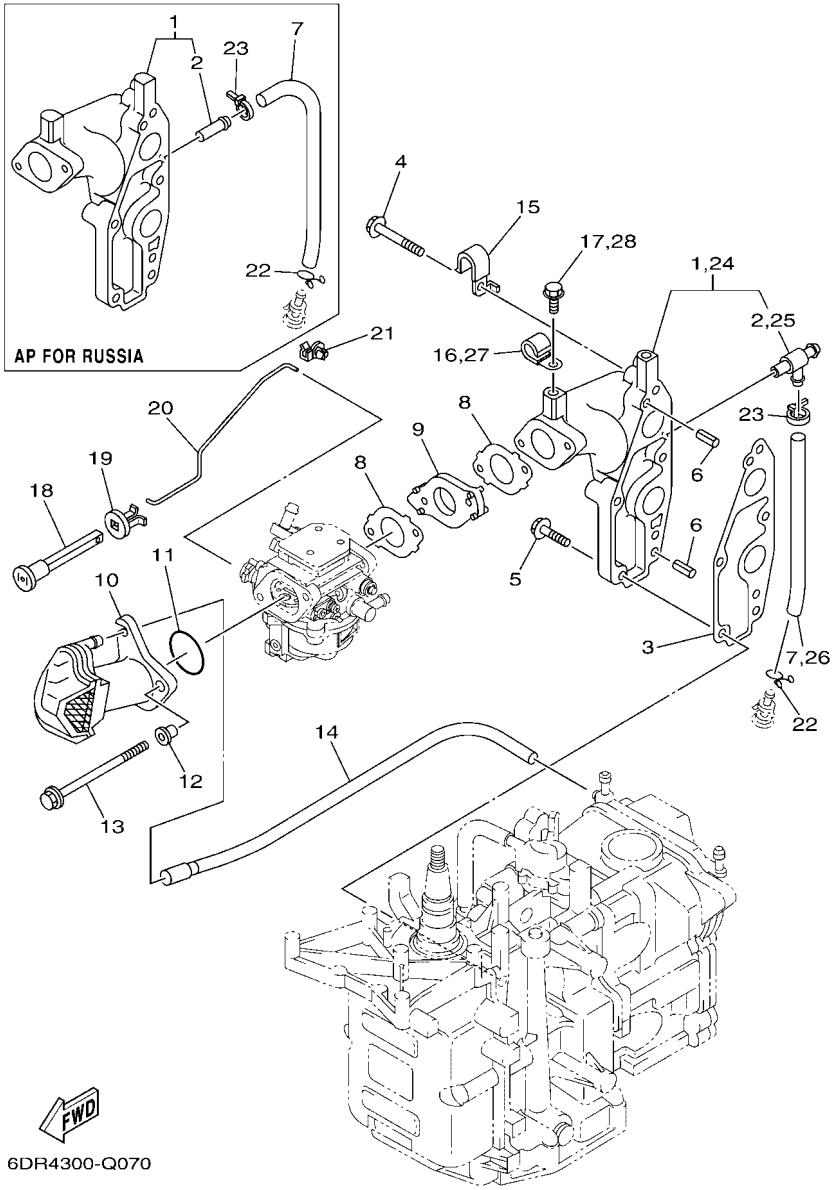

FIG. 7 INTAKE — ADMISSION

REF. NO.	PART NO. N° PIECES	DESCRIPTION DESCRIPTION	MH	E				REMARKS REMARQUES
1	68T–13641–01–1S	MANIFOLD, INTAKE 1 TUBULURE, ADMISSION 1	1					FOR RUS FOR RUS
	68T–13641–20–1S	MANIFOLD, INTAKE 1 TUBULURE, ADMISSION 1	1	1				EUR- FLUSHING KIT EUR- FLUSHING KIT
2	650–24378–00	.PIPE, JOINT 4 .DURITE RACCORDEMENT 3	1					FOR RUS FOR RUS
	67F–12482–00	.PIPE 2 .DURITE 2	1	1				EUR-FLUSHING KIT EUR-FLUSHING KIT
3	68T–13645–00	GASKET, MANIFOLD 1 JOINT, TUBULURE 1	1	1				
4	90119–06MA5	BOLT, WITH WASHER BOULON, AVEC RONDELLE	3	3				
5	90119–06MA3	BOLT, WITH WASHER BOULON, AVEC RONDELLE	2	2				
6	91690–50014	PIN, SPRING AGRAFFE	2	2				
7	90445–09074	HOSE (L130) DURITE (L130)	1					FOR RUS FOR RUS
	90445–09M20	HOSE (L95) DURITE (L95)	1	1				EUR-FLUSHING KIT EUR-FLUSHING KIT
8	68T–13646–A0	GASKET, MANIFOLD 2 JOINT, TUBULURE 2	2	2				
9	68T–14271–00	INSULATOR ISOLATEUR	1	1				
10	6AU–14440–00	SILENCER ASSY, INTAKE SIENCIEUX D'ADMISSION	1	1				
11	93210–31MJ5	O-RING JOINT TORIQUE	1	1				
12	90387–06M70	COLLAR COLLERETTE	2	2				
13	90105–06188	BOLT, FLANGE BOULON, A COLLERETTE	2	2				
14	68T–12483–00	PIPE 3 DURITE 3	1	1				
15	90465–08M99	CLAMP BRIDE	1	1				
16	90465–08M83	CLAMP BRIDE	1	1				EUR-FLUSHING KIT EUR-FLUSHING KIT
17	97E95–06510	BOLT, HEXAGON W/W DEEP RECESS VIS HEXAGONAL AVC RONDELLE	1					EUR-FLUSHING KIT EUR-FLUSHING KIT
18	6H4–41271–02	KNOB, CHOKE BOUTON DE STARTER	1					
19	689–41273–00	GROMMET PASSE-FIL	1					
20	68T–41256–00	ROD, CHOKE 1 TRINGLE 1, STARTER	1					
21	6J8–41262–00	JOINT, CHOKE LEVER RACCORD, LEVIER DE STARTER	1					
22	90467–08M18	CLIP JONC	1	1				
23	90465–11M10	CLAMP BRIDE	1	1				
24	68T–13641–20–1S	MANIFOLD, INTAKE 1 TUBULURE, ADMISSION 1	1					AP RUS- FLUSHING KIT AP RUS- FLUSHING KIT

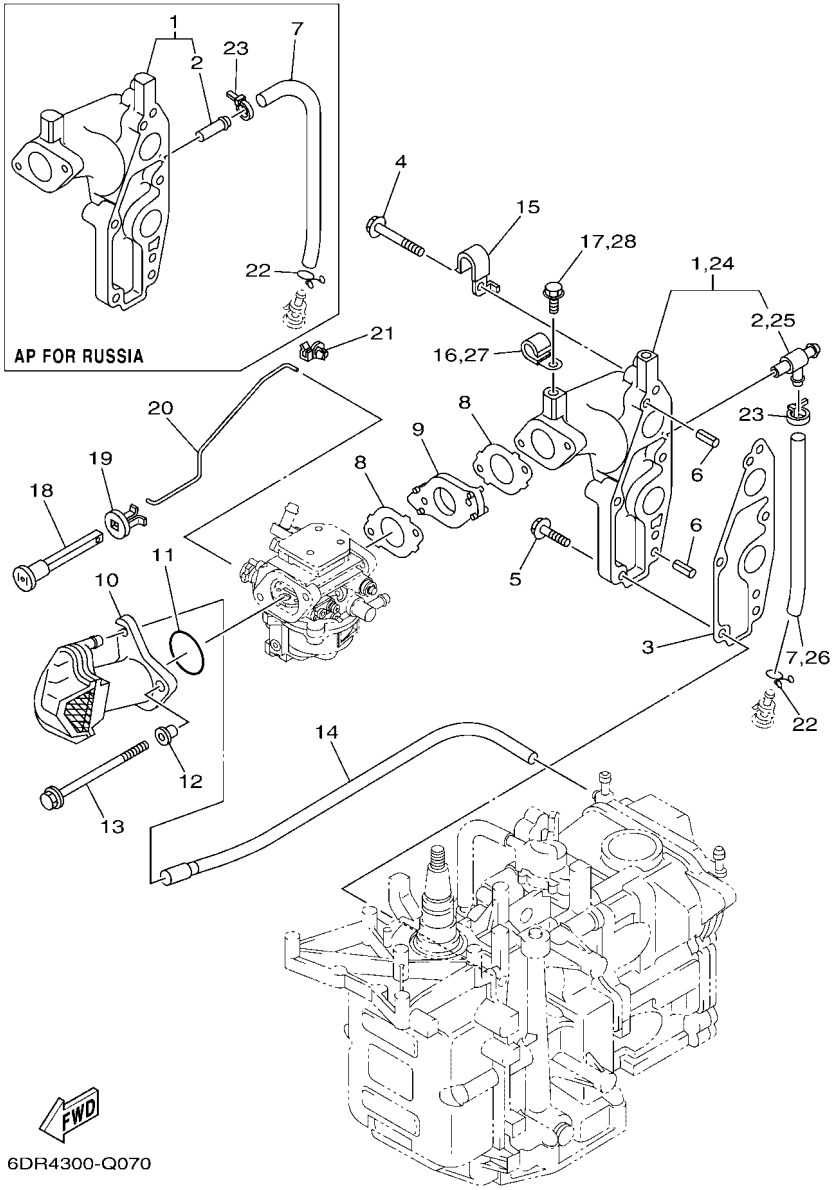

FIG. 7 INTAKE — ADMISSION

REF. NO.	PART NO. N° PIECES	DESCRIPTION DESCRIPTION	MH	E				REMARKS REMARQUES
25	67F–12482–00	.PIPE 2 .DURITE 2	1					
26	90445–09M20	HOSE (L95) DURITE (L95)	1					AP RUS-FLUSHING KIT AP RUS-FLUSHING KIT
27	90465–08M83	CLAMP BRIDE	1					AP RUS-FLUSHING KIT AP RUS-FLUSHING KIT
28	97E95–06510	BOLT, HEXAGON W/W DEEP RECESS VIS HEXAGONAL AVC RONDELLE	1					AP RUS-FLUSHING KIT AP RUS-FLUSHING KIT

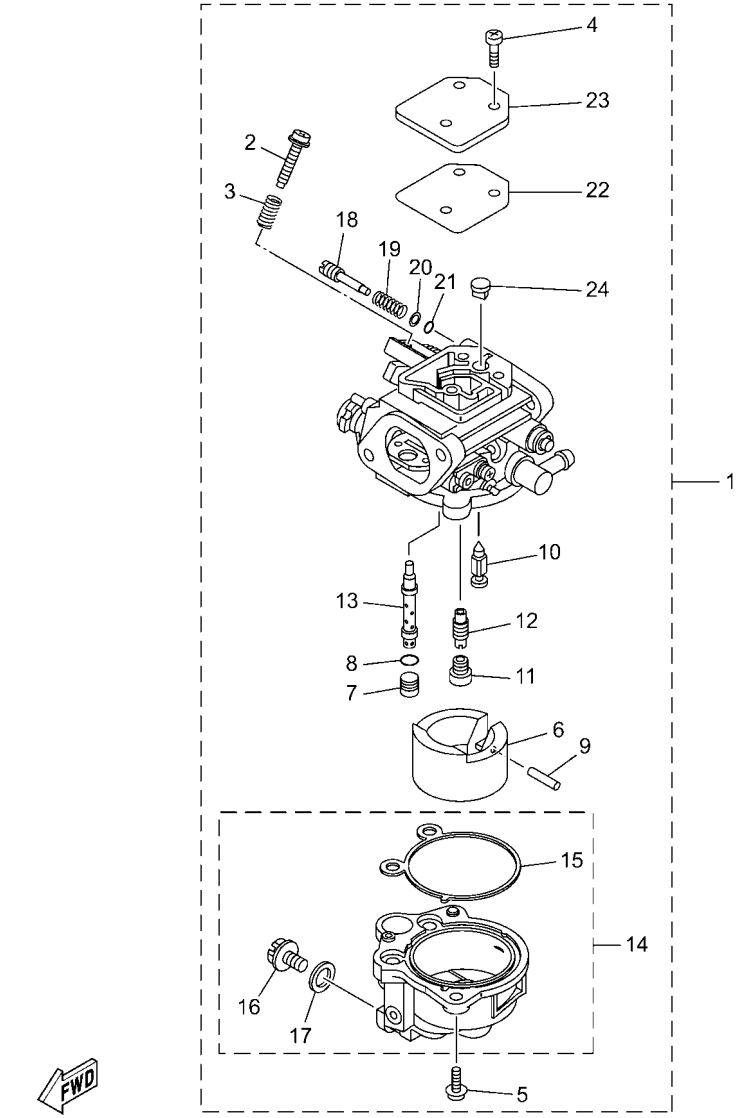

60RA700-M080

FIG. 8 CARBURETOR CARBURATEUR

REF. NO.	PART NO. N° PIECES	DESCRIPTION DESCRIPTION	MH	E				REMARKS REMARQUES
1	6FW–14301–21	CARBURETOR ASSY 1 CARBURATEUR COMPLET 1	1					
	6FW–14301–51	CARBURETOR ASSY 1 CARBURATEUR COMPLET 1		1				
2	69W–14321–00	.SCREW, THROTTLE .VIS, ACCELERATEUR	1	1				
3	62Y–14212–00	.SPRING, PILOT ADJUSTING .RESSORT, VIS DE RALENTI	1	1				
4	6DR–14321–00	.SCREW, THROTTLE .VIS, ACCELERATEUR	3	3				
5	62Y–14321–00	.SCREW, THROTTLE .VIS, ACCELERATEUR	2	2				
6	6DR–14385–00	.FLOAT .FLOTTEUR	1	1				
7	6DR–1432A–00	.PLUG .PLOT	1	1				
8	6DR–14561–00	.O-RING .JOINT TORIQUE	1	1				
9	4FP–14386–00	.PIN, FLOAT .AXE, FLOTTEUR	1	1				
10	6DR–14336–00	.NEEDLE .AIGUILLE	1	1				
11	6FW–14343–37	.JET, MAIN (#74) .GICLEUR, PRINCIPAL (#74)	1	1				
12	6FW–14342–21	.JET, PILOT (#41) .GICLEUR, RALENTI (#41)	1	1				
13	6FW–14341–00	.NOZZLE, MAIN .PUITS D'AIGUILLE	1	1				
14	60S–14381–00	.BODY, FLOAT CHAMBER .CORPS, CUVE DE FLOTTEUR	1	1				
15	6DR–14984–00	..GASKET, FLOAT CHAMBER ..JOINT, CUVE DE FLOTTEUR	1	1				
16	62Y–14383–30	..SCREW, DRAIN ..BOUCHON, PURGE	1	1				
17	652–14397–00	..O-RING ..JOINT TORIQUE	1	1				
18	6DR–14323–10	.SCREW, AIR ADJUSTING .VIS DE DOSEUR D'AIR	1	1				
19	6DR–14334–00	.SPRING, AIR ADJUSTING .RESSORT, VIS DE DOSEUR D'AIR	1	1				
20	6DR–14285–00	.WASHER .RONDELLE	1	1				
21	6DR–14397–00	.O-RING .JOINT TORIQUE	1	1				
22	6DR–14818–00	.COVER GASKET .JOINT DE COURERCLE	1	1				
23	6DR–14157–00	.COVER, MIXING .COUVERCLE DE CHAMBRE	1	1				
24	6DR–14862–00	.PLUG .PLOT	1	1				

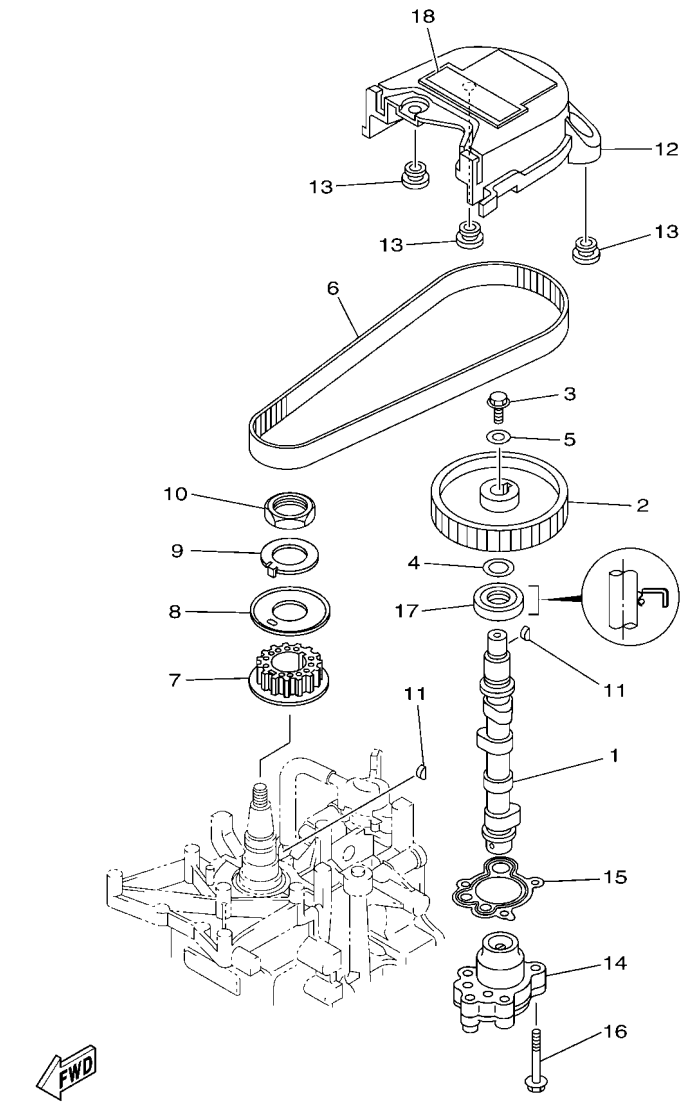

FIG. 9 OIL PUMP — POMPE A HUILE

REF. NO.	PART NO. N° PIECES	DESCRIPTION DESCRIPTION	MH	E				REMARKS REMARQUES
1	68T–12171–01	CAMSHAFT 1 ARBRE A CAMES 1	1	1				
2	66M–11537–01	GEAR, DRIVEN PIGNON SECONDAIRE	1	1				
3	90105–06M14	BOLT FLANGE BOULON, A COLLERETTE	1	1				
4	90201–13201	WASHER, PLATE RONDELLE, PLATE	1	1				
5	90201–06M94	WASHER, PLATE RONDELLE, PLATE	1	1				
6	68T–46241–00	BELT COURROIE TRAPEZOIDALE	1	1				
7	68T–11536–00	GEAR, DRIVE ENGRENAGE, MENANT	1	1				
8	68T–11557–00	WASHER 1 RONDELLE 1	1	1				
9	6G8–11587–01	WASHER, LOCK RONDELLE, FREIN	1	1				
10	90170–24M09	NUT ECROU	1	1				
11	90280–03M01	KEY, WOODRUFF CLAVETTE, DEMI-LUNE	2	2				
12	6AU–46297–00	COVER, DUST COUVERCLE, POUSSIERE	1	1				
13	90480–10627	GROMMET PASSE-FIL	3	3				
14	68T–13300–00	OIL PUMP ASSY POMPE A HUILE COMPLETE	1	1				
15	68T–13329–00	GASKET, PUMP COVER JOINT, COUVERCLE DE POMPE	1	1				
16	97E95–06530	BOLT, HEXAGON W/W DEEP RECESS VIS HEXAGONAL AVC RONDELLE	3	3				
17	93102–18M21	OIL SEAL JOINT SPY	1	1				
18	6AU–13437–61	MARK, CAUTION MAKER	1	1				

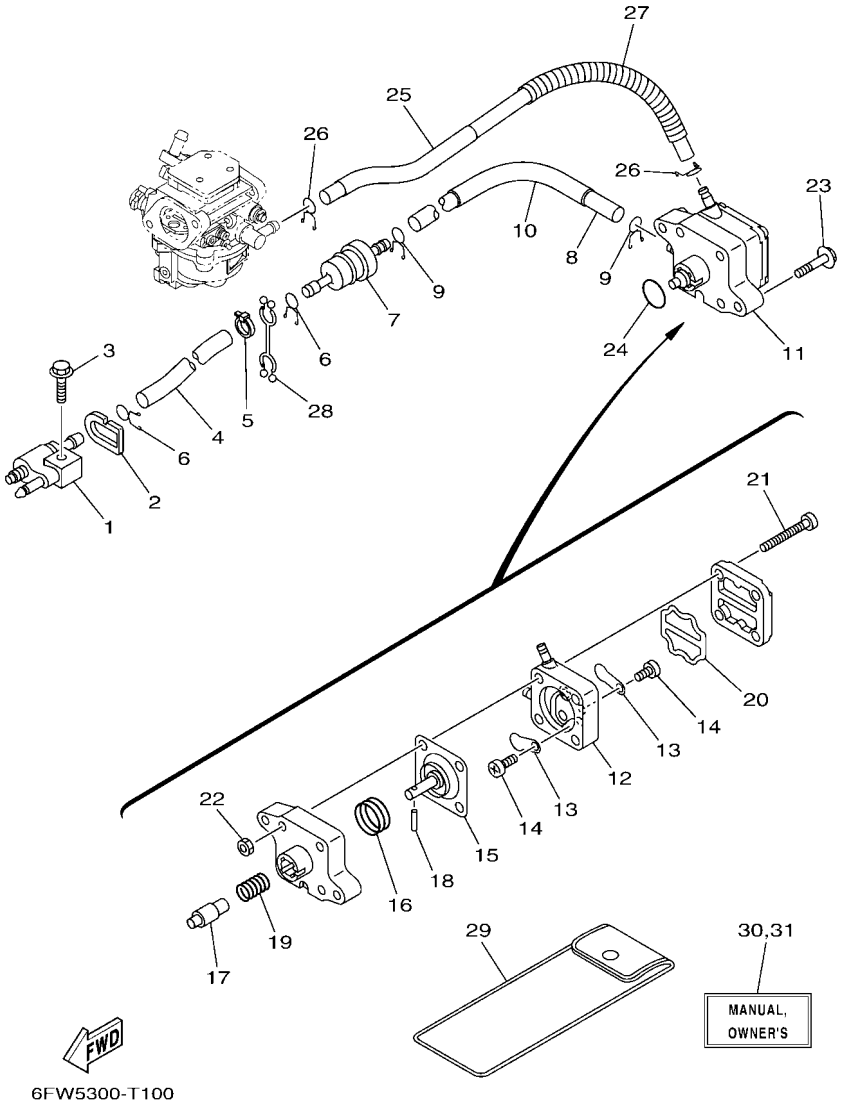

FIG. 10 FUEL CARBURANT

REF. NO.	PART NO. N° PIECES	DESCRIPTION DESCRIPTION	MH	E				REMARKS REMARQUES
1	6G1–24304–11	FUEL PIPE JOINT COMP. 1 DURITE RACCORDEMT. A ESSENCE	1	1				
2	61N–24329–01	SEAL JOINT	1	1				
3	97E95–06525	BOLT, HEXAGON W/W DEEP RECESS VIS HEXAGONAL AVC RONDELLE	1	1				
4	90445–10046	HOSE (L295) DURITE (L295)	1	1				
5	90465–11M10	CLAMP BRIDE	1	1				
6	90467–09M09	CLIP JONC	2	2				
7	68T–24251–01	STRAINER 1 FILTRE 1	1	1				
8	90445–10M50	HOSE (L170) DURITE (L170)	1	1				
9	90467–09M09	CLIP JONC	2	2				
10	90445–16010	HOSE (L140) DURITE (L140)	1	1				
11	68T–24410–02	FUEL PUMP ASSY POMPE A ESSENCE	1	1				
12	66M–24413–01	.BODY 2 .CORPS 2	1	1				
13	6A0–24421–01	.VALVE, CHECK .SOUPAPE, RETENUE	2	2				
14	6E7–14325–00	.SCREW, PAN HEAD .VIS TETE CONIQUE	2	2				
15	66M–24411–02	.DIAPHRAGM .DIAPHRAGME	1	1				
16	66M–24423–00	.SPRING, DIAPHRAGM .RESSORT, DIAPHRAGME	1	1				
17	66M–13131–00	.PLUNGER .PLONGEUR	1	1				
18	66M–24374–00	.PIN .GOUPILLE	1	1				
19	66M–24454–00	.SPRING .RESSORT	1	1				
20	66M–24471–02	.DIAPHRAGM .DIAPHRAGME	1	1				
21	66M–24444–00	.SCREW .VIS	4	4				
22	95380–04600	.NUT .ECROU	4	4				
23	97E95–06630	BOLT, HEXAGON W/W DEEP RECESS VIS HEXAGONAL AVC RONDELLE	2	2				
24	93210–20M65	O-RING JOINT TORIQUE	1	1				
25	6AU–24311–00	PIPE, FUEL 1 DURITE A ESSENCE	1	1				
26	90467–09M09	CLIP JONC	2	2				
27	90447–13014	TUBE DURITE	1	1				

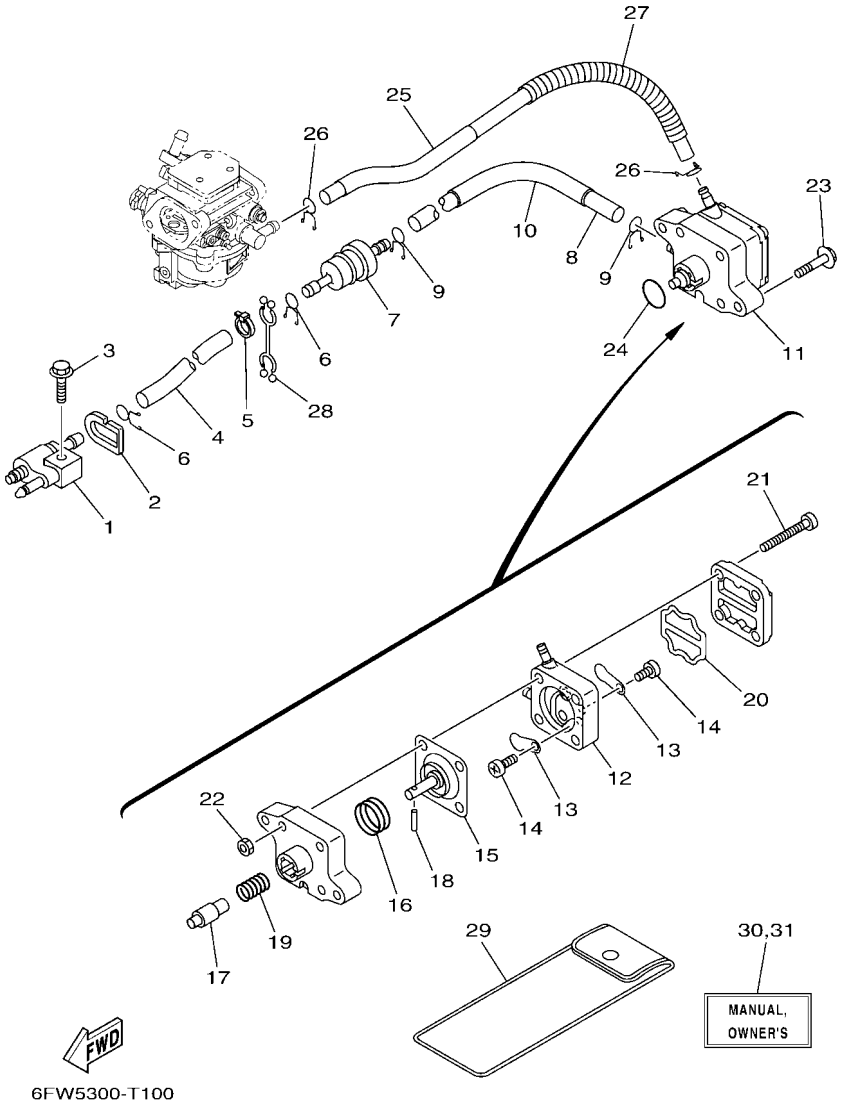

FIG. 10 FUEL — CARBURANT

REF. NO.	PART NO. N° PIECES	DESCRIPTION DESCRIPTION	MH	E				REMARKS REMARQUES
28	90464–10M53	CLAMP BRIDE	1	1				
29	68T–28100–02	TOOL KIT TROUSSE A OUTILS	1	1				AP AP
30	6FW–28199–79–E0	MANUAL,OWNER'S MANUEL D'UTILISATION	1	1				UR (E) UR (E)
	6FW–28199–79–F0	MANUAL,OWNER'S MANUEL D'UTILISATION	1	1				UR (F) UR (F)
	6FW–28199–79–S0	MANUAL,OWNER'S MANUEL D'UTILISATION	1	1				UR (ES) UR (ES)
	6FW–28199–79–G0	MANUAL,OWNER'S MANUEL D'UTILISATION	1	1				UR (D) UR (D)
	6FW–28199–79–D0	MANUAL,OWNER'S MANUEL D'UTILISATION	1	1				UR (NL) UR (NL)
	6FW–28199–79–H0	MANUAL,OWNER'S MANUEL D'UTILISATION	1	1				UR (I) UR (I)
31	6FW–28199–89–K0	MANUAL,OWNER'S MANUEL D'UTILISATION	1	1				UR (DK) UR (DK)
	6FW–28199–89–R0	MANUAL,OWNER'S MANUEL D'UTILISATION	1	1				UR (GR) UR (GR)
	6FW–28199–89–P0	MANUAL,OWNER'S MANUEL D'UTILISATION	1	1				UR (P) UR (P)
	6FW–28199–89–N0	MANUAL,OWNER'S MANUEL D'UTILISATION	1	1				UR (N) UR (N)
	6FW–28199–89–M0	MANUAL,OWNER'S MANUEL D'UTILISATION	1	1				UR (S) UR (S)
	6FW–28199–89–L0	MANUAL,OWNER'S MANUEL D'UTILISATION	1	1				UR (SF) UR (SF)

FIG. 11 STARTER DEMARREUR

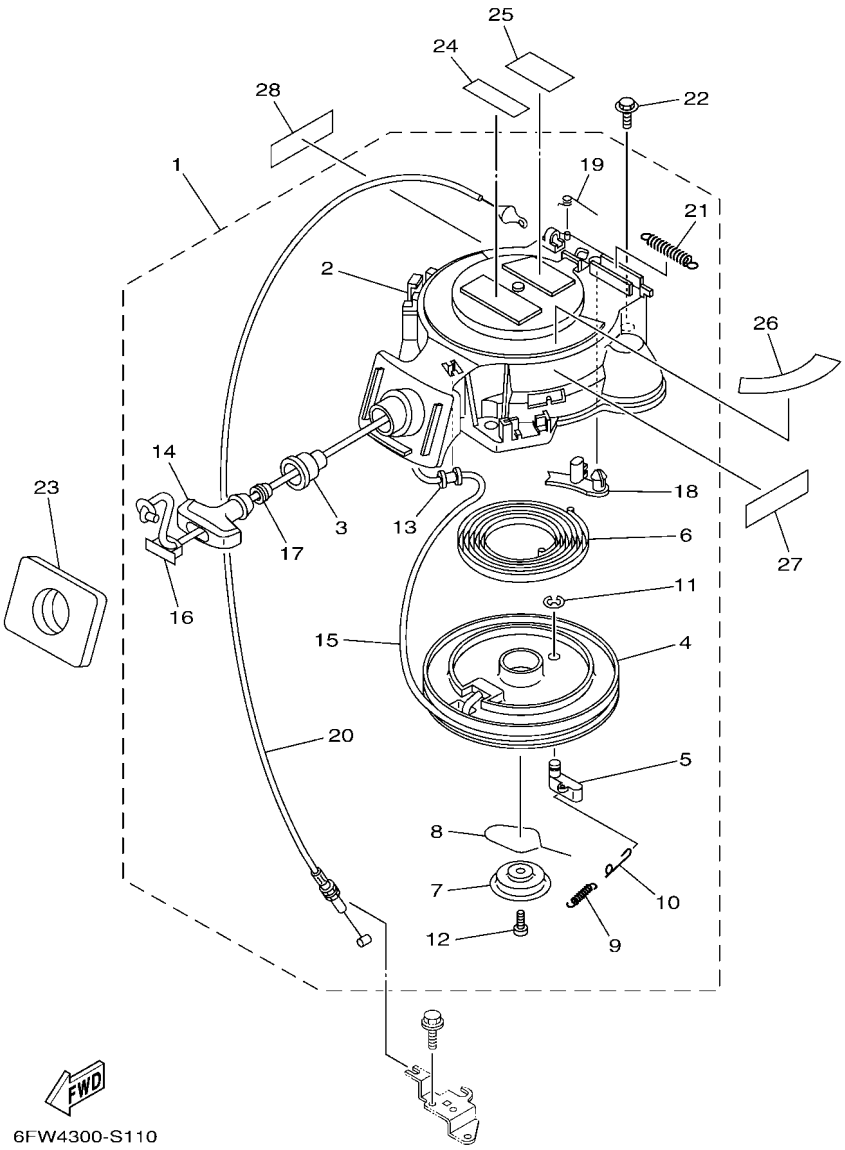

*1:CUT FROM 50M ROLLS,PART NO.90890-44373,CUTTING LENGTH 1.8M

*1:A PRELEVER SUR BOBINE 50M ,REFERENCE 90890-44373,
LONGUEUR DE COUPE 1.8M

REF. NO.	PART NO. N° PIECES	DESCRIPTION DESCRIPTION	MH	E				REMARKS REMARQUES
1	68T–15710–14	STARTER ASSY DEMARREUR COMPLET	1					
2	68T–15711–03	.CASE, STARTER .CARTER DE DEMARREUR	1					
3	68T–15795–00	.GUIDE, ROPE .GUIDE DE CABLE	1					
4	63V–15714–00	.DRUM, SHEAVE .TAMBOUR, POULIE	1					
5	63V–15741–00	.PAWL, DRIVE .CLIQUET, ENTRAINEMENT	1					
6	63V–15713–00	.SPRING, STARTER .RESSORT DE DEMARREUR	1					
7	68T–15716–00	.PLATE, DRIVE .PLAQUE, ENTRAINEMENT	1					
8	63V–15705–01	.SPRING, DRIVE PAWL .RESSORT DE CLIQUET	1					
9	63V–15767–01	.SPRING .RESSORT	1					
10	68T–15784–00	.SPRING, RETURN .RESSORT, RAPPEL	1					
11	63V–15744–00	.CIRCLIP .CIRCLIP	1					
12	68T–15793–00	.SCREW .VIS	1					
13	68T–15764–00	.COLLAR 1 .COLLERETTE 1	1					
14	6G1–15755–00	.HANDLE, STARTER .POIGNEE, DE DEMARREUR	1					
15	*	.WIRE, STARTER (L:1800MM) .CABLE DE DEMARREUR (L:1800MM)	1					*1 *1
16	6G1–15779–00	.COVER .COUVERCLE	1					
17	6A0–15789–01	.DAMPER .AMORTISSEUR	1					
18	68T–15794–00	.STOPPER .BUTEE	1					
19	66T–15734–00	.SPRING, RETURN .RESSORT, RAPPEL	1					
20	68T–15770–00	.CABLE COMP., STARTER STOP .CABLE, BUTEE DE DEMAR	1					
21	66T–15731–00	.SPRING, RETURN .RESSORT, RAPPEL	1					
22	97E95–06520	BOLT, HEXAGON W/W DEEP RECESS VIS HEXAGONAL AVC RONDELLE	3					
23	68T–15762–00	SEAL, RUBBER 2 JOINT CAOUTCHOUC 2	1					
24	6EE–81995–41	LABEL, WARNING ETIQUETTE, AVERTISSEMENT	1					
25	6EE–81995–51	LABEL, WARNING ETIQUETTE, AVERTISSEMENT	1					
26	68T–85711–60	MARK, CAUTION MAKER	1					
27	6EE–81994–41	LABEL, SAFETY ETIQUETTE, SECURITE	1					

FIG. 11 STARTER DEMARREUR

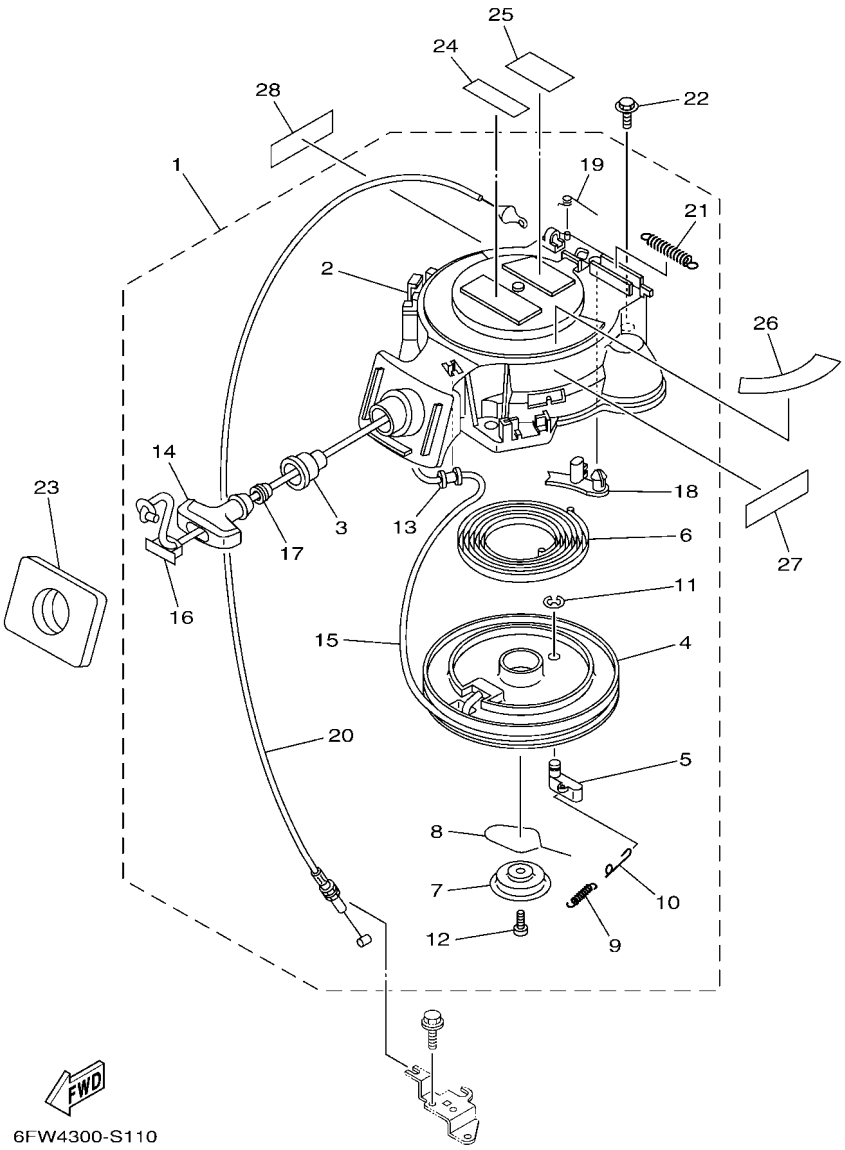

*1:CUT FROM 50M ROLLS,PART NO.90890-44373,CUTTING LENGTH 1.8M

*1:A PRELEVER SUR BOBINE 50M ,REFERENCE 90890-44373,
LONGUEUR DE COUPE 1.8M

REF. NO.	PART NO. N° PIECES	DESCRIPTION DESCRIPTION	MH	E				REMARKS REMARQUES
28	6EE–81994–51	LABEL, SAFETY ETIQUETTE, SECURITE	1					

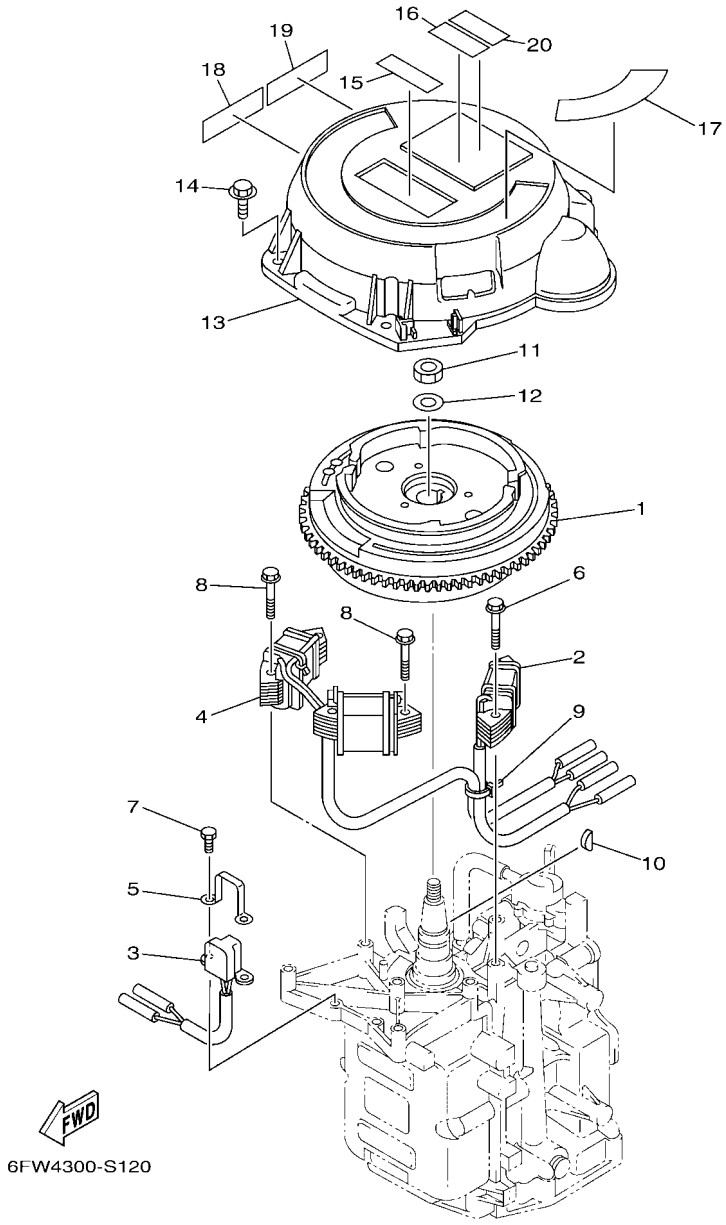

FIG. 12 GENERATOR — GENERATRICE

REF. NO.	PART NO. N° PIECES	DESCRIPTION DESCRIPTION	MH	E				REMARKS REMARQUES
1	6DR–85550–10	ROTOR ASSY ROTOR CPLT	1	1				
2	68T–85520–00	COIL, CHARGE BOBINE, CHARGE	1	1				
3	68T–85580–01	COIL, PULSER BOBINE, PULSEUR	1	1				
4	68T–85533–10	COIL, LIGHTING BOBINE, ECLAIRAGE	1	1				
5	6H2–85582–00	ATTACHMENT, PULSER SUPPORT, PULSEUR	1	1				
6	97513–06530	BOLT, WITH WASHER VIS HEXAGONAL AVC RONDELLE	2	2				
7	97095–05010	BOLT BOULON	2	2				
8	97513–06530	BOLT, WITH WASHER VIS HEXAGONAL AVC RONDELLE	4	4				
9	90465–11M10	CLAMP BRIDE	1	1				
10	90280–04M06	KEY, WOODRUFF CLAVETTE, DEMI-LUNE	1	1				
11	90170–12066	NUT ECROU	1	1				
12	90201–12472	WASHER, PLATE RONDELLE, PLATE	1	1				
13	6AV–81337–00	COVER, FLYWHEEL COUVERCLE, VOLANT		1				
14	97E95–06520	BOLT, HEXAGON W/W DEEP RECESS VIS HEXAGONAL AVC RONDELLE		3				
15	6EE–81995–41	LABEL, WARNING ETIQUETTE, AVERTISSEMENT		1				
16	6EE–81995–51	LABEL, WARNING ETIQUETTE, AVERTISSEMENT		1				
17	68T–85711–60	MARK, CAUTION MAKER		1				
18	6EE–81994–41	LABEL, SAFETY ETIQUETTE, SECURITE		1				
19	6EE–81994–51	LABEL, SAFETY ETIQUETTE, SECURITE		1				
20	6AG–81996–01	MARK MARQUE		1				

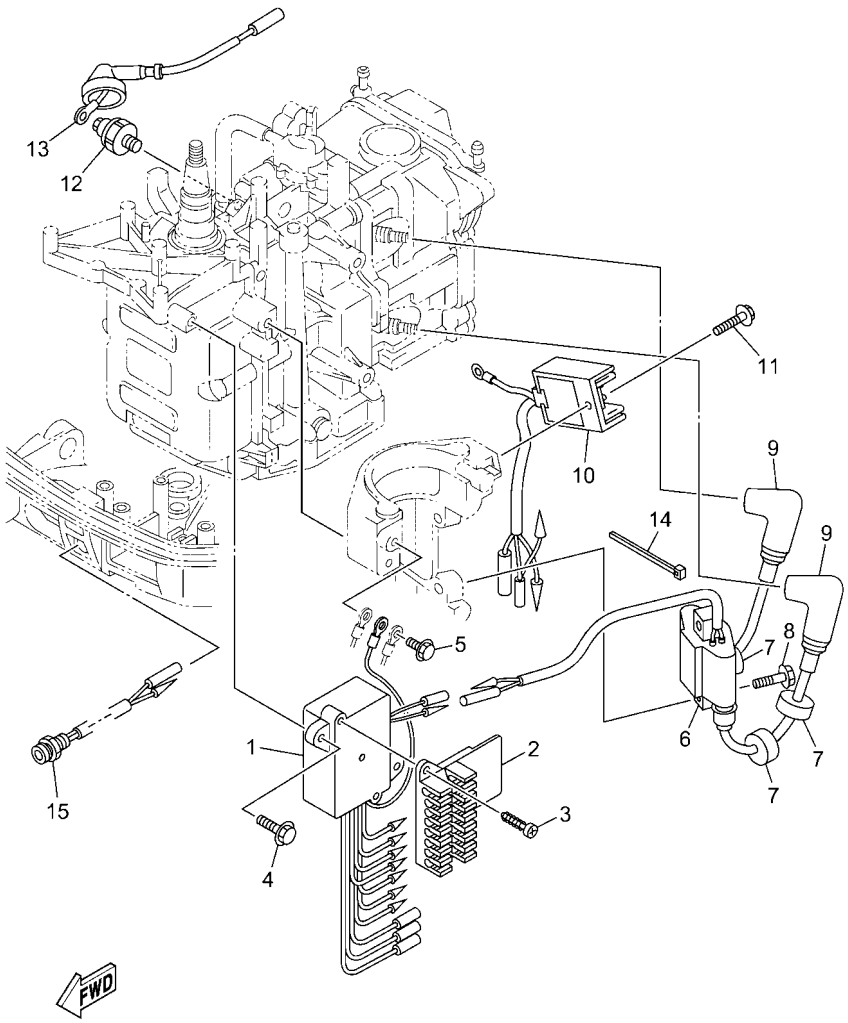

6DRE100-Z140

FIG. 13 ELECTRICAL 1 — PARTIE ELECTRIQUE 1

REF. NO.	PART NO. N° PIECES	DESCRIPTION DESCRIPTION	MH	E				REMARKS REMARQUES
1	68T–85540–00	C.D.I. UNIT ASSY BLOC C.D.I.	1	1				
2	68T–82522–00	CLAMP, COUPLER BRIDE, DE CONNECTEUR	1	1				
3	97780–40512	SCREW, TAPPING VIS, TETE BOMBEE	2	2				
4	97E95–06520	BOLT, HEXAGON W/W DEEP RECESS VIS HEXAGONAL AVC RONDELLE	2	2				
5	97E95–06512	BOLT, HEXAGON W/W DEEP RECESS VIS HEXAGONAL AVC RONDELLE	1	1				
6	680–85570–02	IGNITION COIL ASSY BOBINE D'ALLUMAGE (ENS.)	1	1				
7	90480–25003	GROMMET PASSE-FIL	3	3				
8	90119–06MA3	BOLT, WITH WASHER BOULON, AVEC RONDELLE	2	2				
9	6E3–82370–21	PLUG CAP ASSY ANTIPARASITE	2	2				
10	68T–81960–00	RECTIFIER & REGULATOR ASSY REDRESSEUR REGULATEUR CPLT	1	1				MH-FOR RUS MH-FOR RUS
11	97E95–06512	BOLT, HEXAGON W/W DEEP RECESS VIS HEXAGONAL AVC RONDELLE	1	1				MH-FOR RUS MH-FOR RUS
12	67F–82504–00	OIL PRESSURE SWITCH ASSY CONTACTEUR DE PRESSION D'HUILE	1	1				
13	68T–82127–11	WIRE, LEAD 2 FIL 2	1	1				
14	90465–11M10	CLAMP BRIDE	1	1				
15	68T–85410–10	EMERGENCY SIGNAL LIGHT ASSY FEU DE DETRESSE	1	1				

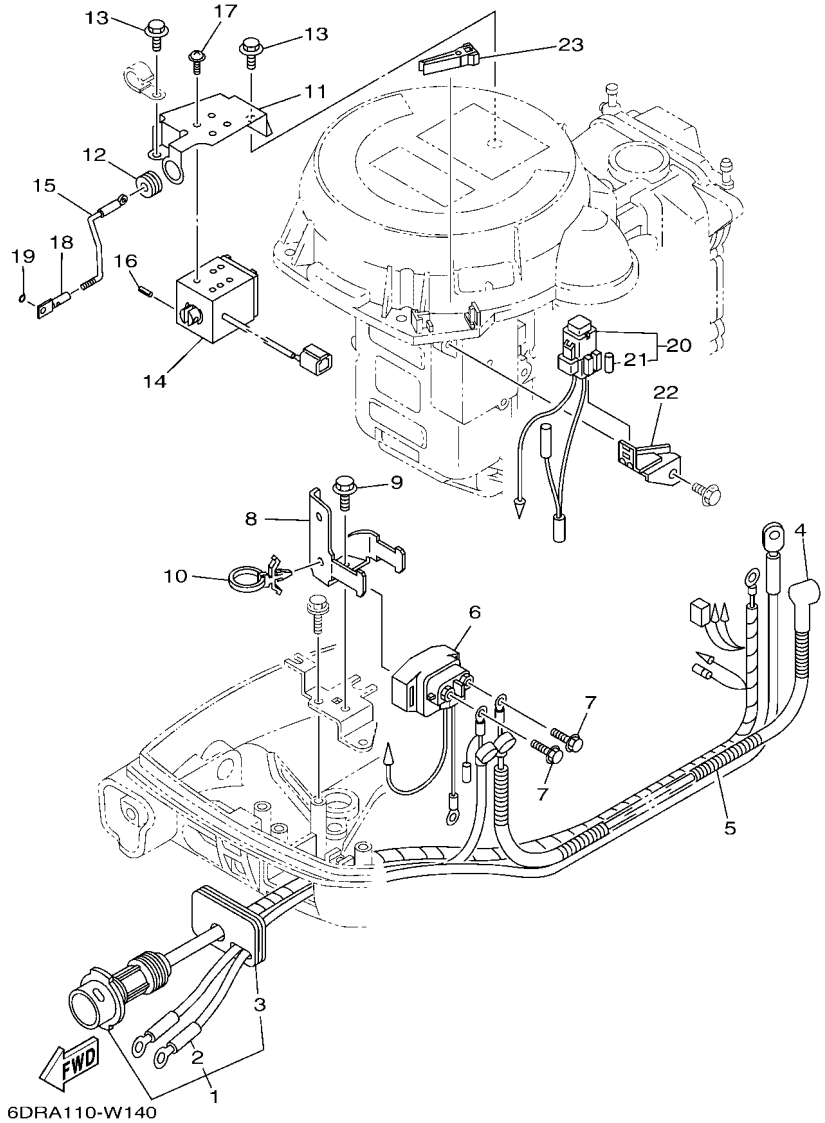

FIG. 14 ELECTRICAL 2 — PARTIE ELECTRIQUE 2

REF. NO.	PART NO. N° PIECES	DESCRIPTION DESCRIPTION	MH	E				REMARKS REMARQUES
1	69G–82580–02	WIRE HARNESS ASSY 2 FAISCEAU DE FILS 2 CPLT		1				
2	69G–82105–02	.BATTERY CABLE (L: 3.0M) .CABLE DE BATTERIE (L: 3.0M)		1				
3	68T–42724–40	.GROMMET .PASSE-FIL		1				
4	6G8–82117–01	WIRE, LEAD FIL		1				
5	90446–10M86	HOSE (L140) DURITE (L140)		1				
6	68T–81940–00	STARTER RELAY ASSY LANCEUR RELAIS (ENS.)		1				
7	97E95–06610	BOLT, HEXAGON W/W DEEP RECESS VIS HEXAGONAL AVC RONDELLE		2				
8	68T–81945–01	PLATE, SWITCH FITTING PLAQUE, FIXATION DU RELAIS		1				
9	97E95–06512	BOLT, HEXAGON W/W DEEP RECESS VIS HEXAGONAL AVC RONDELLE		1				
10	90465–12M56	CLAMP BRIDE		1				
11	68T–86112–00	STAY, SOLENOID SUPPORT, SOLENOIDE		1				
12	90480–13018	GROMMET PASSE-FIL		1				
13	97E95–06512	BOLT, HEXAGON W/W DEEP RECESS VIS HEXAGONAL AVC RONDELLE		2				
14	68T–86111–00	COIL, SOLENOID BOBINE		1				
15	68T–41237–00	JOINT, LINK RACCORD		1				
16	91690–30010	PIN, SPRING AGRAFFE		1				
17	97980–04208	SCREW, WITH WASHER VIS, AVEC RONDELLE		4				
18	68T–86117–00	HOOK, WIRE PULL CROCHET, TENSION DE CABLE		1				
19	93210–03261	O-RING JOINT TORIQUE		1				
20	68T–82150–00	FUSE HOLDER ASSY SUPPORT DE FUSIBLE		1				
21	66V–82151–00	.FUSE (10A-BL) .FUSIBLE (10A-BL)		2				
22	68T–82171–01	STAY, FUSE BOX SUPPORT, BOITE A FUSIBLES		1				
23	67F–2812A–00	PULLER, FUSE TENDEUR, FUSIBLE		1				

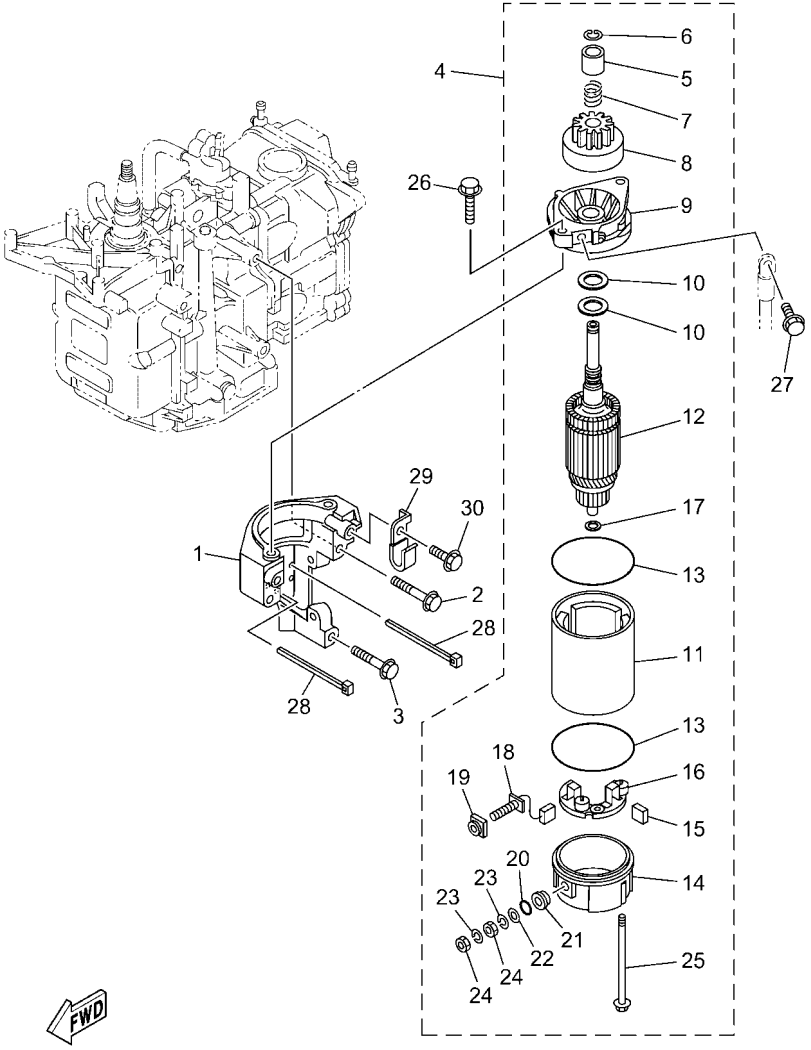

6DRE100-Z170

FIG. 15 STARTING MOTOR — DEMARREUR ELECTRIQUE

REF. NO.	PART NO. N° PIECES	DESCRIPTION DESCRIPTION	MH	E				REMARKS REMARQUES
1	68T–81822–01	BRACKET, STARTING MOTOR SUPPORT, DEMARREUR ELECTRIQUE	1	1				
2	90119–08046	BOLT, WITH WASHER BOULON, AVEC RONDELLE	2	2				
3	90119–08020	BOLT, WITH WASHER BOULON, AVEC RONDELLE	1	1				
4	68T–81800–10	STARTING MOTOR ASSY DEMARREUR ELECTRIQUE COMPLET		1				
5	68T–81859–00	.STOPPER, PINION .BUTEE, PIGNON		1				
6	689–81884–00	.CLIP,PINION STOPPER .CLIP, STOPPEUR DE PIGNON		1				
7	689–81858–00	.SPRING, RETURN .RESSORT		1				
8	689–81807–20	.GEAR ASSY, STARTING MOTOR .PIGNON, DEMARREUR ELECTRIQUE		1				
9	68T–81830–00	.FRONT BRACKET ASSY .SUPPORT AVANT		1				
10	689–81835–00	.WASHER .RONDELLE		2				UN UN
11	689–81810–20	.STATOR ASSY .STATOR COMPLET		1				
12	689–81850–20	.ARMATURE ASSY .INDUIT		1				
13	689–81847–20	.O-RING .JOINT TORIQUE		2				
14	689–81820–20	.REAR BRACKET ASSY .SUPPORT ARRIERE COMPLET		1				
15	689–81812–20	.BRUSH 2 .CHARBON 2		1				
16	689–81840–20	.BRUSH HOLDER ASSY .SUPPORT DE CHARBON		1				
17	689–81824–00	.WASHER 2 .RONDELLE 2		1				
18	689–81811–20	.BRUSH 1 .CHARBON 1		1				
19	689–8182H–00	.BUSH, TERMINAL 2 .DOUILLE, BORNE 2		1				
20	689–8182L–00	.O-RING 1 .JOINT TORIQUE 1		1				
21	689–8182G–00	.BUSH, TERMINAL .BAGUE, BORNE		1				
22	689–8182E–00	.WASHER .RONDELLE		1				
23	689–8182F–00	.WASHER .RONDELLE		2				
24	689–8182A–00	.NUT .ECROU		2				
25	689–81826–20	.BOLT .BOULON		2				
26	90119–08M76	BOLT, WITH WASHER BOULON, AVEC RONDELLE		2				
27	97E95–08516	BOLT, HEXAGON W/W DEEP RECESS VIS HEXAGONAL AVC RONDELLE		1				

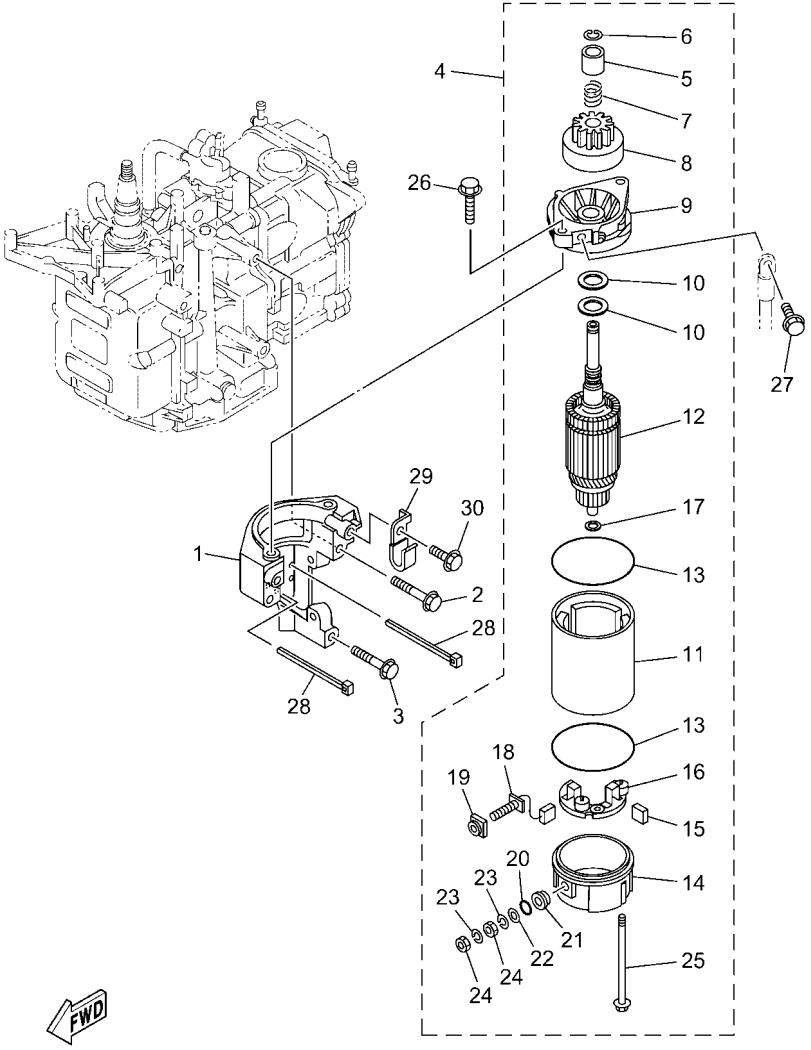

6DRE100-Z170

FIG. 15 STARTING MOTOR — DEMARREUR ELECTRIQUE

REF. NO.	PART NO. N° PIECES	DESCRIPTION DESCRIPTION	MH	E				REMARKS REMARQUES
28	90465–11M10	CLAMP BRIDE	2	2				MH-FOR RUS MH-FOR RUS
29	90465–08M99	CLAMP BRIDE	1	1				
30	97E95–06512	BOLT, HEXAGON W/W DEEP RECESS VIS HEXAGONAL AVC RONDELLE	1	1				

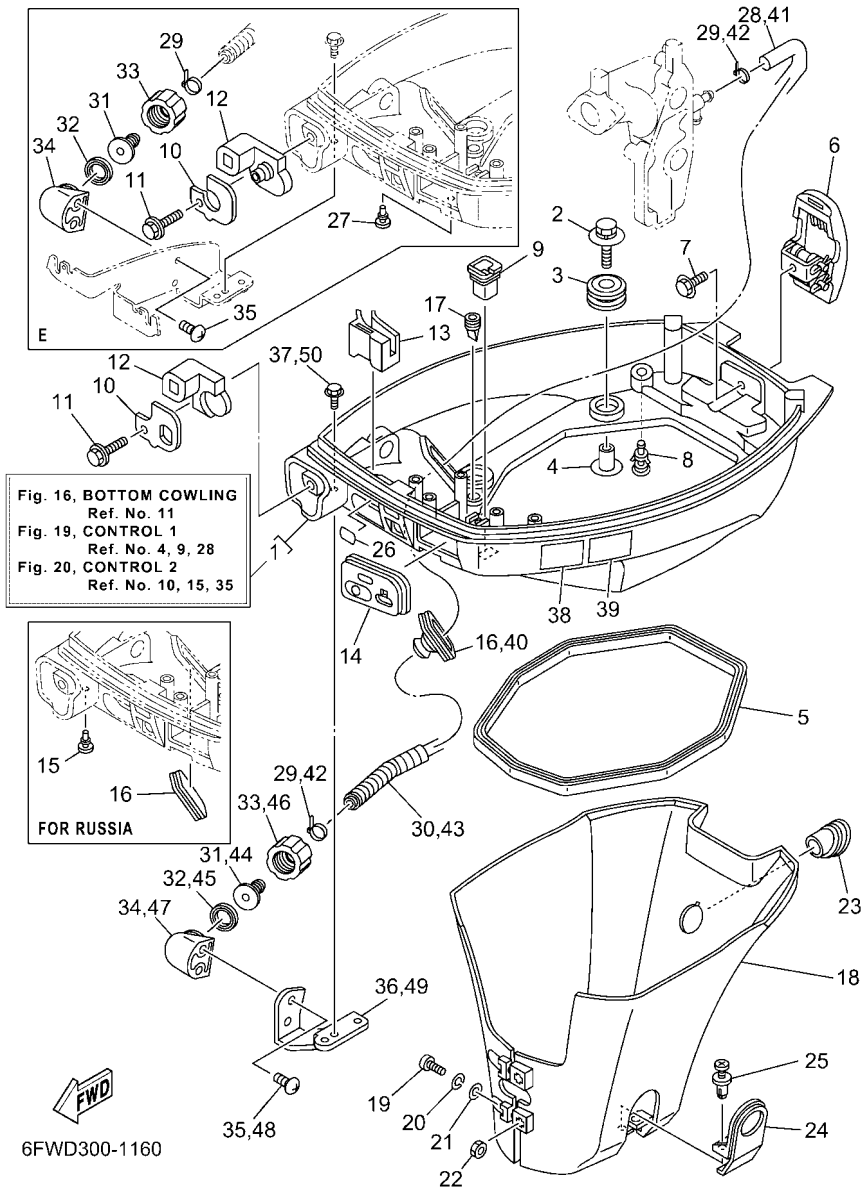

FIG. 16 BOTTOM COWLING — CAPOT INFERIEUR

REF. NO.	PART NO. N° PIECES	DESCRIPTION DESCRIPTION	MH	E				REMARKS REMARQUES
1	6DR–42710–00–8D	BOTTOM COWLING ASSY ENS. EMBASE	1	1				
2	90119–06291	BOLT, WITH WASHER BOULON, AVEC RONDELLE	4	4				
3	90480–21M82	GROMMET PASSE-FIL	4	4				
4	90387–06176	COLLAR COLLERETTE	4	4				
5	68T–42716–10	RUBBER SEAL 1 JOINT EN CAOUTCHOUC 1	1	1				
6	6AU–42801–00	COWLING CLAMP COMP. BRIDE DE CAPOT COMP.	1	1				
7	97E95–06512	BOLT, HEXAGON W/W DEEP RECESS VIS HEXAGONAL AVC RONDELLE	1	1				
8	6BL–44391–00	NIPPLE, HOSE RACCORD D'ESSENCE	1	1				
9	682–42727–01	GROMMET PASSE-FIL	1	1				
10	6DR–42761–00	STOPPER PLAQUETTE	1					
	6DR–42761–10	STOPPER PLAQUETTE		1				
11	90109–06M86	BOLT BOULON	1	1				
12	6DR–42725–01	GROMMET PASSE-FIL	1					
	6DR–42725–11	GROMMET PASSE-FIL		1				
13	68T–26367–01	PROTECTOR PROTECTEUR	1					
14	68T–42724–20	GROMMET PASSE-FIL	1					
15	90480–06M19	GROMMET PASSE-FIL	2					FOR RUS FOR RUS
16	6H4–42726–01	GROMMET PASSE-FIL	1					FOR RUS FOR RUS
	688–42726–11	GROMMET PASSE-FIL	1	1				EUR-FLUSHING KIT EUR-FLUSHING KIT
17	65W–42717–00	RUBBER, SEAL 2 JOINT EN CAOUTCHOUC 2	2	2				
18	68T–42741–00	APRON, 1 CAPOT LATERAL 1	1	1				
19	97885–06030	SCREW, PAN HEAD VIS, A ENCOCHE	2	2				
20	92995–06100	WASHER, SPRING RONDELLE, GROWER	2	2				
21	92995–06600	WASHER RONDELLE	2	2				
22	95380–06600	NUT, HEXAGON ECROU	2	2				
23	68T–42717–01	RUBBER, SEAL 2 JOINT EN CAOUTCHOUC 2	1	1				
24	68T–42771–00	APRON, 2 CAPOT LATERAL 2	1	1				

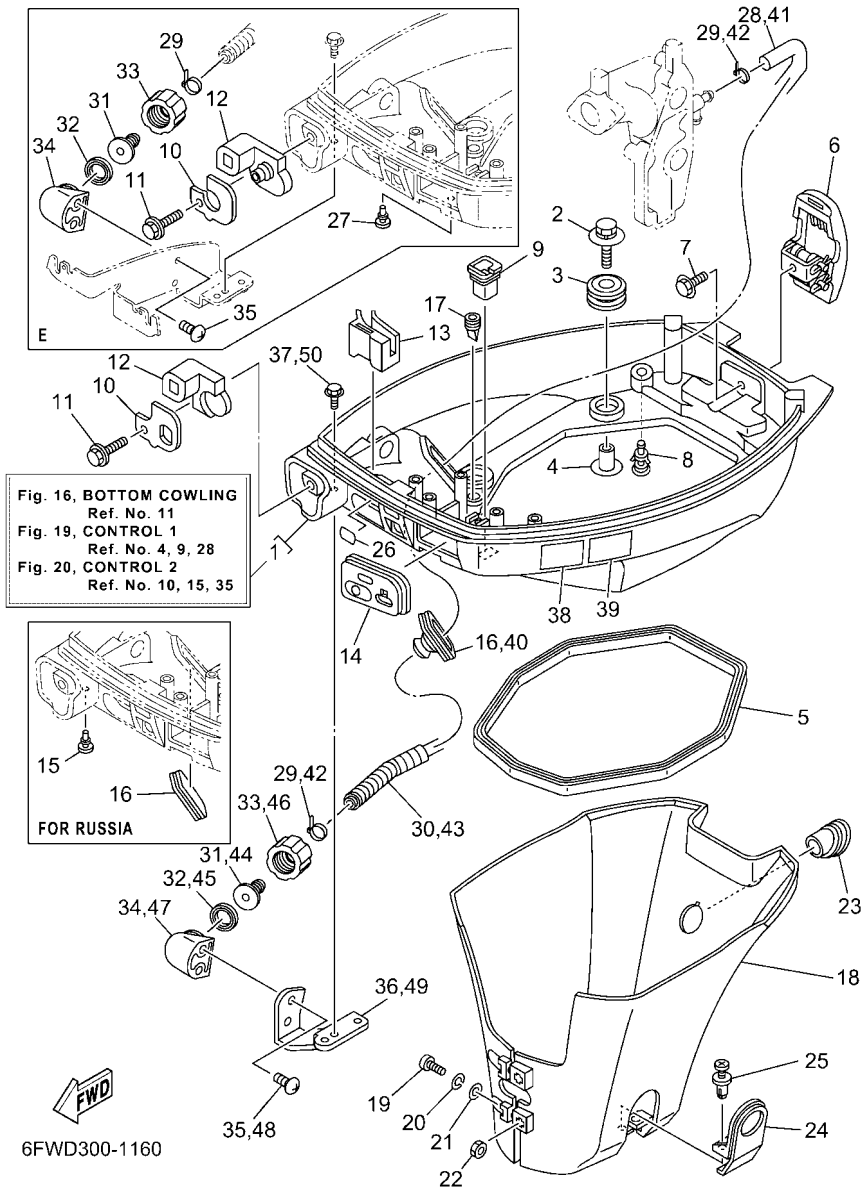

FIG. 16 BOTTOM COWLING — CAPOT INFERIEUR

REF. NO.	PART NO. N° PIECES	DESCRIPTION DESCRIPTION	MH	E				REMARKS REMARQUES
25	90338–06M20	PLUG PLOT	2	2				
26	65W–84342–00	SEAT, EMBLEM SIEGE, EMBLEME	1	1				
27	90480–06M19	GROMMET PASSE-FIL		1				
28	6E5–12481–00	PIPE 1 DURITE 1	1	1				EUR-FLUSHING KIT EUR-FLUSHING KIT
29	90465–11M10	CLAMP BRIDE	2	2				EUR-FLUSHING KIT EUR-FLUSHING KIT
30	90447–13M00	TUBE DURITE	1	1				EUR-FLUSHING KIT EUR-FLUSHING KIT
31	6R3–12582–00	JOINT, HOSE 2 RACCORD DE TUYAU 1	1	1				EUR-FLUSHING KIT EUR-FLUSHING KIT
32	6R3–12583–10	GASKET, HOSE JOINT JOINT	1	1				EUR-FLUSHING KIT EUR-FLUSHING KIT
33	6R3–12581–10	JOINT, HOSE 1 JOINT DE TUYAU	1	1				EUR-FLUSHING KIT EUR-FLUSHING KIT
34	6DR–12572–00	ADAPTER ADAPTATEUR	1	1				EUR-FLUSHING KIT EUR-FLUSHING KIT
35	90167–06002	SCREW, TAPPING VIS, TETE FRAISEE	2	2				EUR-FLUSHING KIT EUR-FLUSHING KIT
36	68T–12535–20	PLATE PLAQUE	1					EUR-FLUSHING KIT EUR-FLUSHING KIT
37	97E95–06512	BOLT, HEXAGON W/W DEEP RECESS VIS HEXAGONAL AVC RONDELLE	2					EUR-FLUSHING KIT EUR-FLUSHING KIT
38	6EE–42794–41	LABEL, WARNING (GENERAL) ETIQUETTE, AVERTISSEMENT	1	1				
39	6EE–42794–51	LABEL, WARNING (GENERAL) ETIQUETTE, AVERTISSEMENT	1	1				
40	688–42726–11	GROMMET PASSE-FIL	1					AP RUS-FLUSHING KIT AP RUS-FLUSHING KIT
41	6E5–12481–00	PIPE 1 DURITE 1	1					AP RUS-FLUSHING KIT AP RUS-FLUSHING KIT
42	90465–11M10	CLAMP BRIDE	2					AP RUS-FLUSHING KIT AP RUS-FLUSHING KIT
43	90447–13M00	TUBE DURITE	1					AP RUS-FLUSHING KIT AP RUS-FLUSHING KIT
44	6R3–12582–00	JOINT, HOSE 2 RACCORD DE TUYAU 1	1					AP RUS-FLUSHING KIT AP RUS-FLUSHING KIT
45	6R3–12583–10	GASKET, HOSE JOINT JOINT	1					AP RUS-FLUSHING KIT AP RUS-FLUSHING KIT
46	6R3–12581–10	JOINT, HOSE 1 JOINT DE TUYAU	1					AP RUS-FLUSHING KIT AP RUS-FLUSHING KIT
47	6DR–12572–00	ADAPTER ADAPTATEUR	1					AP RUS-FLUSHING KIT AP RUS-FLUSHING KIT
48	90167–06002	SCREW, TAPPING VIS, TETE FRAISEE	2					AP RUS-FLUSHING KIT AP RUS-FLUSHING KIT
49	68T–12535–20	PLATE PLAQUE	1					AP RUS-FLUSHING KIT AP RUS-FLUSHING KIT
50	97E95–06512	BOLT, HEXAGON W/W DEEP RECESS VIS HEXAGONAL AVC RONDELLE	2					AP RUS-FLUSHING KIT AP RUS-FLUSHING KIT

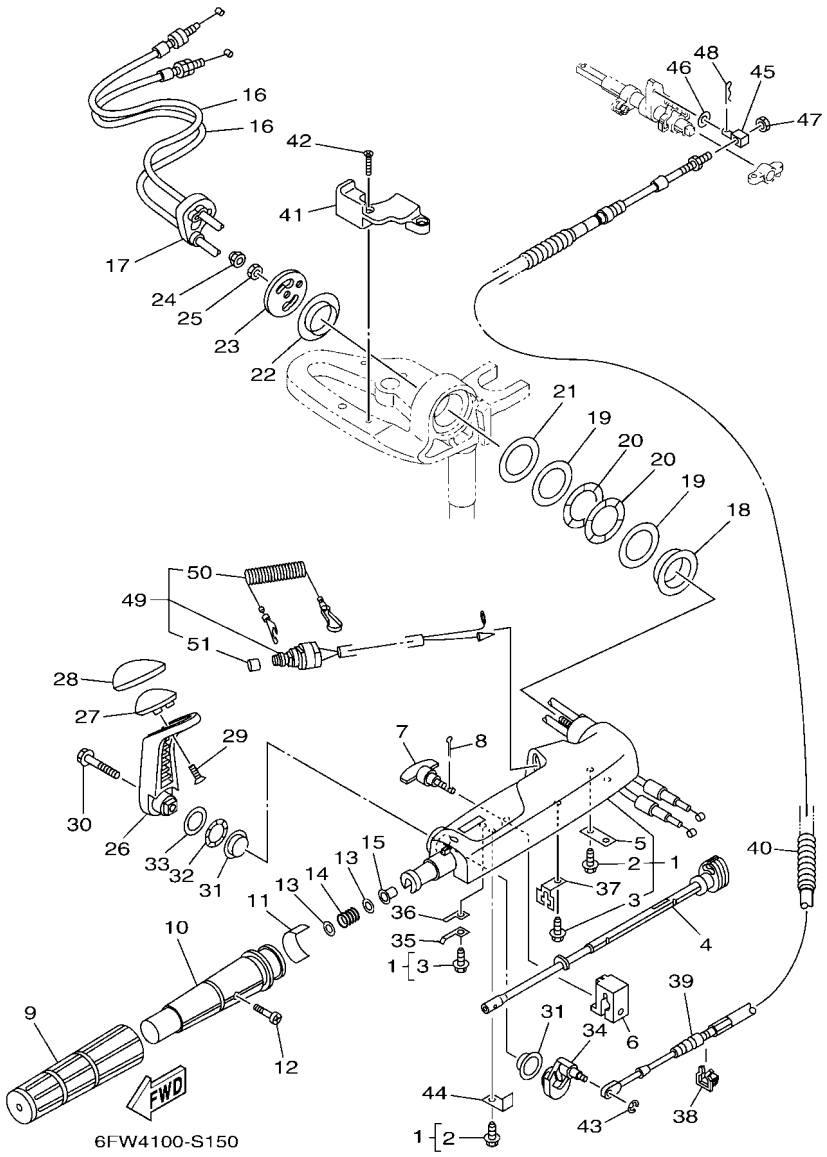

FIG. 17 STEERING — DIRECTION

REF. NO.	PART NO. N° PIECES	DESCRIPTION DESCRIPTION	MH	E				REMARKS REMARQUES
1	6DR–42101–00–8D	HANDLE, STEERING POIGNEE	1					
2	90109–06M86	.BOLT .BOULON	2					
3	90109–06M80	.BOLT .BOULON	2					
4	6DR–42138–01	LEVER, THROTTLE LEVIER, ACCELERATEUR	1					
5	65W–42159–00	STAY SUPPORT	1					
6	6DR–42126–00	FRICTION, STEERING HANDLE GRIP CUVETTE, POIGNEE DE DIRECTION	1					
7	65W–42125–00	BOLT, FRICTION ADJUSTING BOULON	1					
8	91490–16010	PIN. COTTER GOUPILLE	1					
9	67D–42177–01	RUBBER, HANDLE CAOUTCHOUC, POIGNEE	1					
10	67D–42119–01	GRIP, STEERING HANDLE POIGNEE, BARRE FRANCHE	1					
11	6FW–42137–00	INDICATOR, THROTTLE INDICATEUR, ACCELERATION	1					
12	90152–05011	SCREW, COUNTERSUNK VIS, TETE NOYEE	1					
13	90201–10M02	WASHER, PLATE RONDELLE, PLATE	2					
14	90501–23215	SPRING, COMPRESSION RESSORT, COMPRESSION	1					
15	90386–08032	BUSH DOUILLE	1					
16	6DR–26301–00	THROTTLE CABLE ASSY CABLE D'ACCELERATEUR	2					
17	6DR–26316–01	BOOT, THROTTLE CABLE SOUFFLET, CABLE D'ACCELERATEUR	1					
18	66R–42171–00	BUSHING COUSSINET	1					
19	90201–43M00	WASHER, PLATE RONDELLE, PLATE	2					
20	90206–43M22	WASHER, WAVE RONDELLE, ONDULEE	2					
21	90202–43M57	WASHER, PLATE RONDELLE, PLATE	1					
22	90386–40M99	BUSH DOUILLE	1					
23	65W–42131–01	COVER, HANDLE STEERING COUVERCLE	1					
24	95780–10300	NUT, FLANGE ECROU	1					
25	95380–10700	NUT ECROU	1					
26	6DR–44111–00–8D	HANDLE, GEAR SHIFT POIGNEE, LEVIER D'EMBRAYAGE	1					
27	6DR–44173–00	LEVER, SHIFT CONTROL POIGNEE, INVERSION	1					

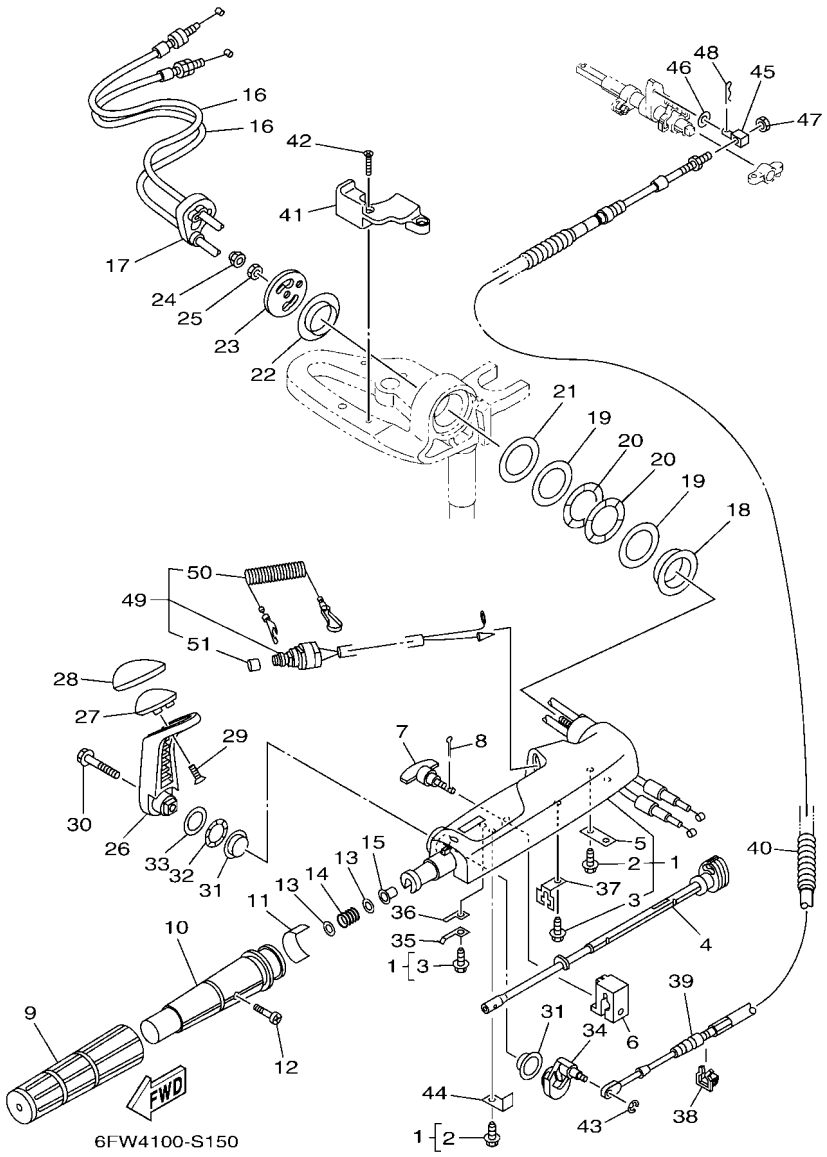

FIG. 17 STEERING — DIRECTION

REF. NO.	PART NO. N° PIECES	DESCRIPTION DESCRIPTION	MH	E				REMARKS REMARQUES
28	6DR–42129–01	BUSHING, RUBBER DOUILLE, CAOUTCHOUC	1					
29	97780–60920	SCREW, TAPPING VIS, TETE BOMBEE	2					
30	97E95–08535	BOLT, HEXAGON W/W DEEP RECESS VIS HEXAGONAL AVC RONDELLE	1					
31	90386–26MA3	BUSH DOUILLE	2					
32	90206–26M25	WASHER, WAVE RONDELLE, ONDULEE	1					
33	90202–26M59	WASHER, PLATE RONDELLE, PLATE	1					
34	6DR–44113–A0	CAM PLATE, HANDLE CAME, VERROUILLAGE	1					
35	6DR–44116–00	SPRING RESSORT	1					
36	66R–44118–00	BRACKET SUPPORT	1					
37	66R–48538–00	CLAMP, CABLE 1 COLLIER	1					
38	63D–48538–00	CLAMP, CABLE 1 COLLIER	1					
39	6DR–48321–00	CABLE CABLE	1					
40	90447–13015	TUBE DURITE	1					
41	6DR–82594–00	CLAMP BRIDE	1					
42	90151–05003	SCREW, COUNTERSUNK VIS, TETE NOYEE	2					
43	99080–04600	CIRCLIP CIRCLIP	1					
44	6DR–44114–00	STOPPER PLAQUETTE	1					
45	66R–48344–01	CABLE END, REMOTE CONTROL CHAPE CABLE	1					
46	90201–06117	WASHER, PLATE RONDELLE, PLATE	1					
47	90170–05M38	NUT ECROU	1					
48	91490–20012	PIN. COTTER GOUPILLE	1					
49	65W–82575–01	ENGINE STOP SWITCH ASSY COUPE CIRCUIT CPLT	1					
50	682–82556–00	.LANYARD, STOP SWITCH .CORDON DU COUPE CIRCUIT	1					
51	689–8257Y–00	.CAP .COUVERCLE	1					

FIG. 18 STEERING FRICTION — CUVETTE POIGNEE DE DIRECTION

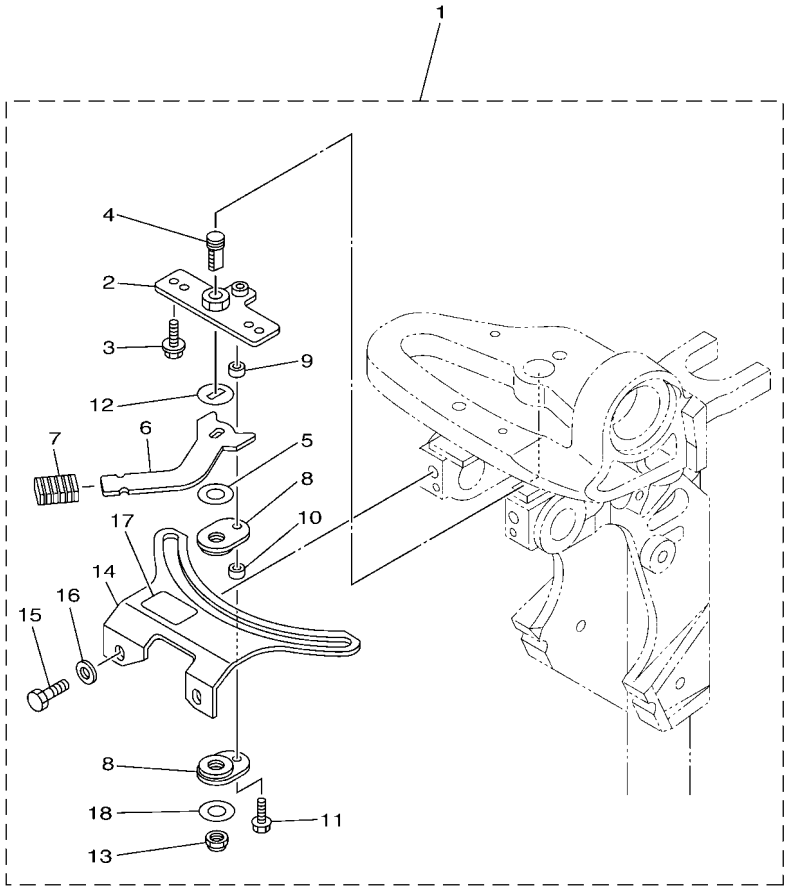

6FW4100-S160

REF. NO.	PART NO. N° PIECES	DESCRIPTION DESCRIPTION	MH	E				REMARKS REMARQUES
1	6AH–42508–03	STEERING FRICTION ASSY DIRECTION FRICTION (ENS.)	1					
2	68T–42525–01	.PLATE, FRICTION .PLAQUE, FRICTION	1					
3	90119–05018	.BOLT, WITH WASHER .BOULON, AVEC RONDELLE	2					
4	67C–42562–A0	.SHAFT, STEERING LOCK .ARBRE,ANTIVOL DE DIRECTION	1					
5	90202–10M56	.WASHER, PLATE .RONDELLE, PLATE	1					
6	68T–42561–00	.KNOB, STEERING LOCK .BOUTON	1					
7	689–43633–01	.COVER, TILT LEVER .COUVERCLE	1					
8	65W–42528–00	.PLATE, FRICTION .PLAQUE, FRICTION	2					
9	90387–05053	.COLLAR .COLLERETTE	1					
10	90387–05054	.COLLAR .COLLERETTE	1					
11	97595–05520	.BOLT, WITH WASHER .VIS HEXAGONAL AVC RONDELLE	1					
12	90209–10M26	.WASHER .RONDELLE	1					
13	90185–10M14	.NUT, SELF-LOCKING .ECROU,AUTO-BLOQUANT	1					
14	6AH–42527–00	.PLATE, FRICTION .PLAQUE, FRICTION	1					
15	97D95–08016	.BOLT, HEXAGON DEEP RECESS .VIS HEXAGONAL	2					
16	90201–08065	.WASHER, PLATE .RONDELLE, PLATE	2					
17	68T–43155–00	.MARK 1 .ETIQUETTE 1	1					
18	90201–106M5	.WASHER, PLATE .RONDELLE, PLATE	1					

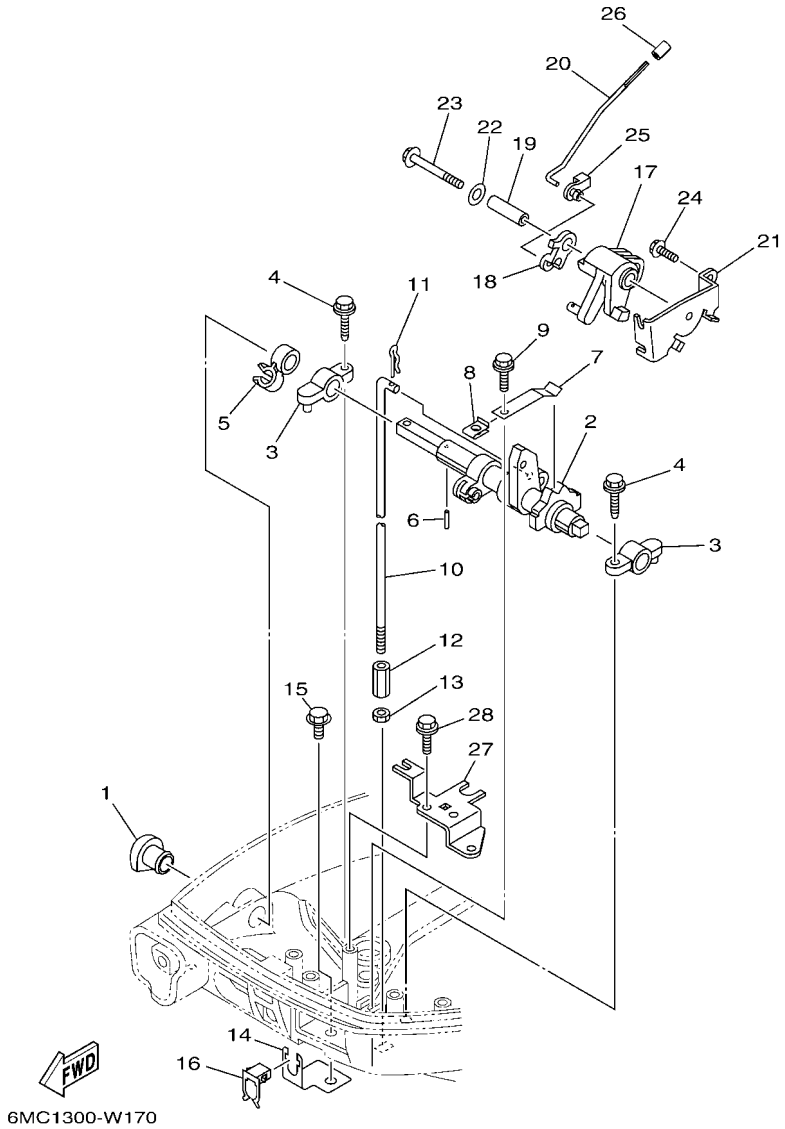

FIG. 19 CONTROL 1 — COMMANDE 1

REF. NO.	PART NO. N° PIECES	DESCRIPTION DESCRIPTION	MH	E				REMARKS REMARQUES
1	68T–42726–01	GROMMET PASSE-FIL	1					
2	68T–44121–03	LEVER, SHIFT ROD LEVIER, TIGE D'INVERSION	1					
3	6G1–41662–01–94	BRACKET 2 SUPPORT 2	2					
4	90109–06M81	BOLT BOULON	2					
5	90464–10M60	CLAMP BRIDE	1					
6	91690–30014	PIN, SPRING AGRAFFE	1					
7	65W–44116–00	SPRING RESSORT	1					
8	6DR–44117–01	BRACKET SUPPORT	1					
9	90109–06M86	BOLT BOULON	1					
10	68T–44143–01	ROD, SHIFT 1 TIGE D'EMBRAYAGE 1	1					S(17.0") S(17.0")
	68T–44143–11	ROD, SHIFT 1 TIGE D'EMBRAYAGE 1	1					L(22.0") L(22.0")
11	90468–18001	CLIP JONC	1					
12	61N–44146–00	CONNECTOR, SHIFT ROD 2 CONNECTEUR, TIGE D'INVERSION 2	1					
13	95380–06700	NUT ECROU	1					
14	68T–48538–00	CLAMP, CABLE 1 COLLIER	1					
15	97E95–06512	BOLT, HEXAGON W/W DEEP RECESS VIS HEXAGONAL AVC RONDELLE	1					
16	63D–48538–00	CLAMP, CABLE 1 COLLIER	1					
17	68T–41638–00	PULLEY POULIE	1					
18	68T–41283–00	LEVER, FREE ACCEL. LEVIER	1					
19	90387–06M59	COLLAR COLLERETTE	1					
20	6AU–41211–00	LINK, ACCEL. BIELLETTE, ACCELERATION	1					
21	68T–14497–00	STAY, THROTTLE WIRE SUPPORT DE BOISSEAU	1					
22	92990–06200	WASHER, PLAIN RONDELLE, PLATE	1					
23	97E95–06545	BOLT, HEXAGON W/W DEEP RECESS VIS HEXAGONAL AVC RONDELLE	1					
24	97E95–06512	BOLT, HEXAGON W/W DEEP RECESS VIS HEXAGONAL AVC RONDELLE	1					
25	6J8–41262–00	JOINT, CHOKE LEVER RACCORD, LEVIER DE STARTER	1					
26	6FW–13448–00	CAP CAPUCHON	1					

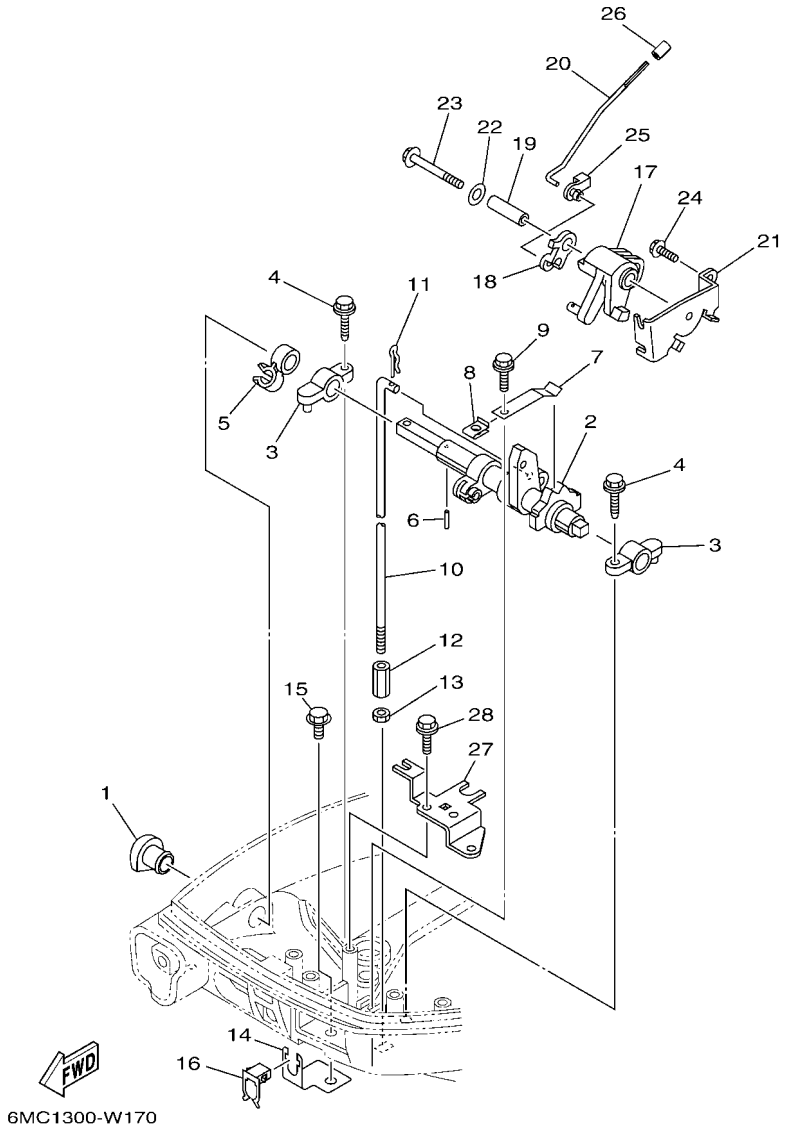

FIG. 19 CONTROL 1 — COMMANDE 1

REF. NO.	PART NO. N° PIECES	DESCRIPTION DESCRIPTION	MH	E				REMARKS REMARQUES
27	68T–15774–20	STAY 4 SUPPORT 4	1					
28	90109–06M86	BOLT BOULON	2					

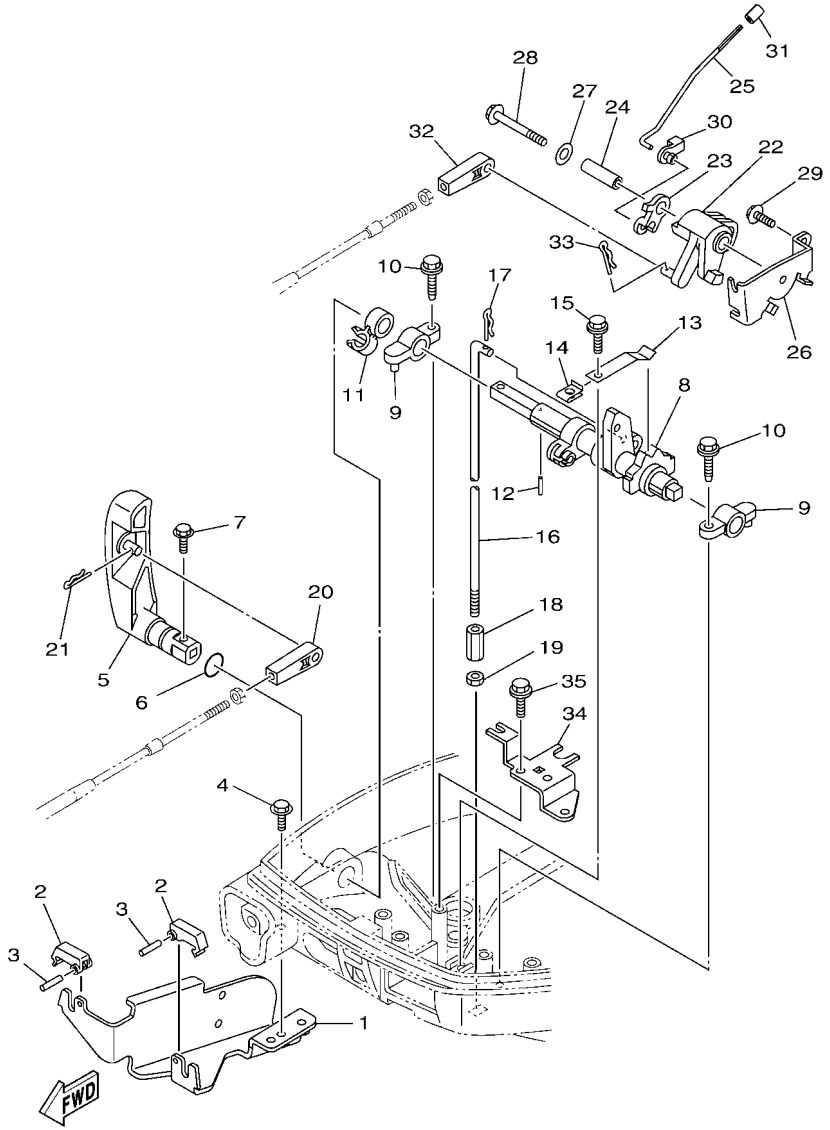

6MC1300-W180

FIG. 20 CONTROL 2 — COMMANDE 2

REF. NO.	PART NO. N° PIECES	DESCRIPTION DESCRIPTION	MH	E				REMARKS REMARQUES
1	6DR–48531–01	BRACKET, REMOTE CONTROL 1 ETRIER 1, COMMANDE A DISTANCE		1				
2	682–48538–50	CLAMP, CABLE 1 COLLIER		2				
3	91690–30012	PIN, SPRING AGRAFFE		2				
4	97E95–06512	BOLT, HEXAGON W/W DEEP RECESS VIS HEXAGONAL AVC RONDELLE		2				
5	6AU–44111–10	HANDLE, GEAR SHIFT POIGNEE, LEVIER D'EMBRAYAGE		1				
6	93210–12327	O-RING JOINT TORIQUE		1				
7	97595–05516	BOLT, WITH WASHER VIS HEXAGONAL AVC RONDELLE		1				
8	68T–44121–03	LEVER, SHIFT ROD LEVIER, TIGE D'INVERSION		1				
9	6G1–41662–01–94	BRACKET 2 SUPPORT 2		2				
10	90109–06M81	BOLT BOULON		2				
11	90464–10M60	CLAMP BRIDE		1				
12	91690–30014	PIN, SPRING AGRAFFE		1				
13	65W–44116–00	SPRING RESSORT		1				
14	6DR–44117–01	BRACKET SUPPORT		1				
15	90109–06M86	BOLT BOULON		1				
16	68T–44143–11	ROD, SHIFT 1 TIGE D'EMBRAYAGE 1		1				L(22.0") L(22.0")
17	90468–18001	CLIP JONC		1				
18	61N–44146–00	CONNECTOR, SHIFT ROD 2 CONNECTEUR, TIGE D'INVERSION 2		1				
19	95380–06700	NUT ECROU		1				
20	6FM–48344–00	CABLE END, REMOTE CONTROL CHAPE CABLE		1				
21	90468–18008	CLIP JONC		1				
22	68T–41638–00	PULLEY POULIE		1				
23	68T–41283–00	LEVER, FREE ACCEL. LEVIER		1				
24	90387–06M59	COLLAR COLLERETTE		1				
25	6AU–41211–00	LINK, ACCEL. BIELLETTE, ACCELERATION		1				
26	68T–14497–00	STAY, THROTTLE WIRE SUPPORT DE BOISSEAU		1				
27	92990–06200	WASHER, PLAIN RONDELLE, PLATE		1				

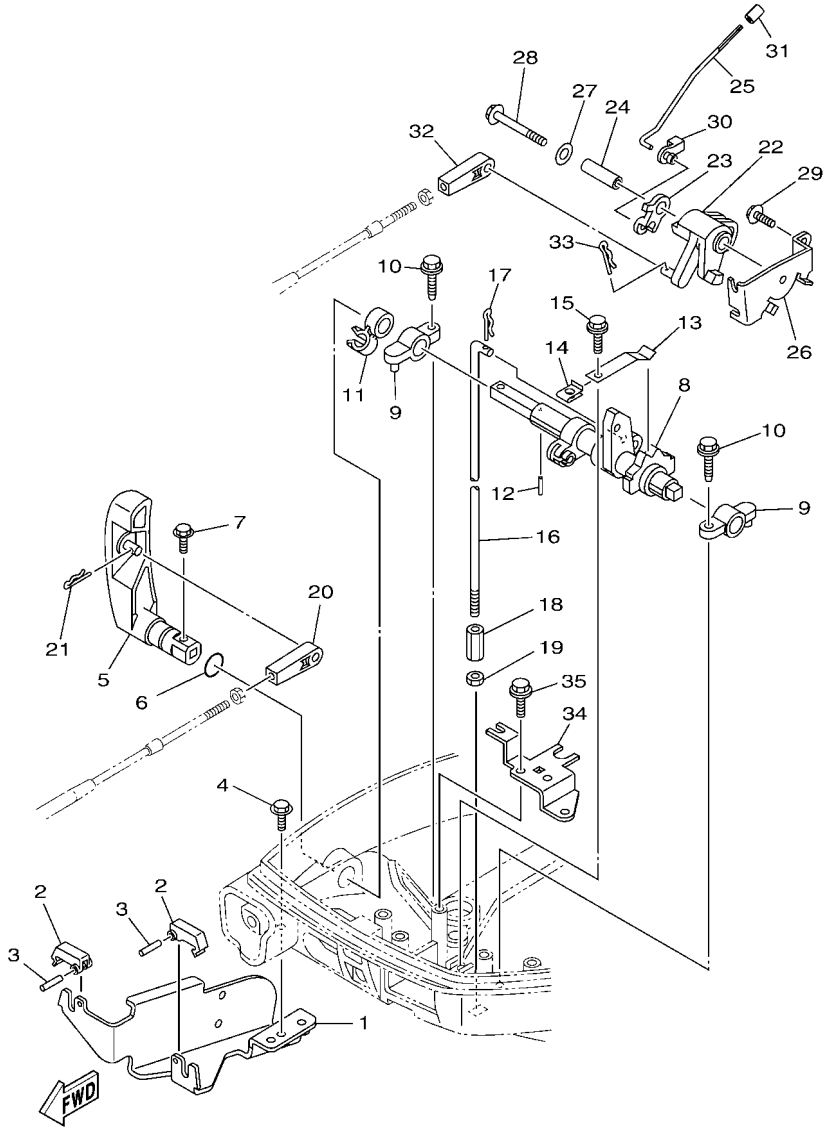

6MC1300-W180

FIG. 20 CONTROL 2 — COMMANDE 2

REF. NO.	PART NO. N° PIECES	DESCRIPTION DESCRIPTION	MH	E				REMARKS REMARQUES
28	97E95–06545	BOLT, HEXAGON W/W DEEP RECESS VIS HEXAGONAL AVC RONDELLE		1				
29	97E95–06512	BOLT, HEXAGON W/W DEEP RECESS VIS HEXAGONAL AVC RONDELLE		1				
30	6J8–41262–00	JOINT, CHOKE LEVER RACCORD, LEVIER DE STARTER		1				
31	6FW–13448–00	CAP CAPUCHON		1				
32	6FM–48344–00	CABLE END, REMOTE CONTROL CHAPE CABLE		1				
33	90468–18008	CLIP JONC		1				
34	68T–15774–20	STAY 4 SUPPORT 4		1				
35	90109–06M86	BOLT BOULON		2				

FIG. 21 REMO CON ATTACHMENT COMMANDE A DISTANCE

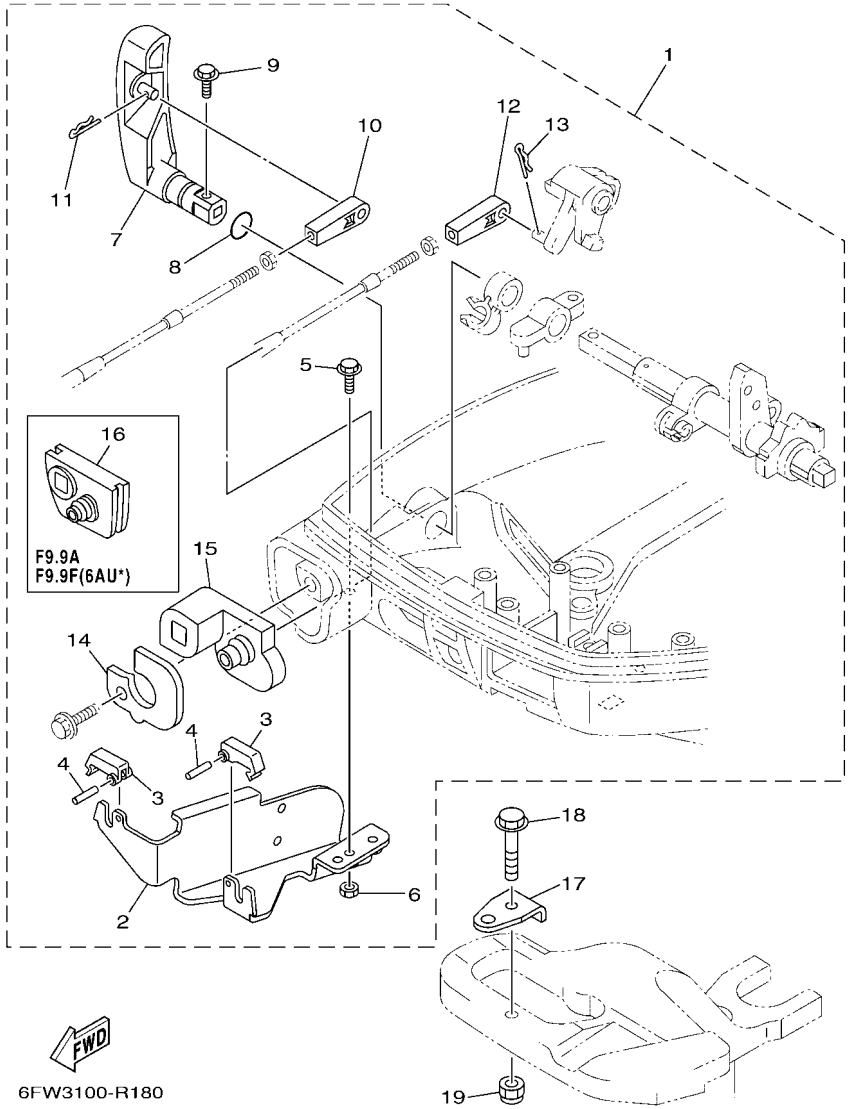

REF. NO.	PART NO. N° PIECES	DESCRIPTION DESCRIPTION	MH	E				REMARKS REMARQUES
1	6DR–48501–03	REMOTE CONT. ATTACHMENT ASSY. COMMANDE A DISTANCE (KIT)	1					AP AP
2	68T–48531–01	.BRACKET, REMOTE CONTROL 1 .ETRIER 1, COMMANDE A DISTANCE	1					
3	682–48538–50	.CLAMP, CABLE 1 .COLLIER	2					
4	91690–30012	.PIN, SPRING .AGRAFFE	2					
5	97E95–06512	.BOLT, HEXAGON W/W DEEP RECESS .VIS HEXAGONAL AVC RONDELLE	2					
6	95380–06600	.NUT, HEXAGON .ECROU	2					
7	6AU–44111–10	.HANDLE, GEAR SHIFT .POIGNEE, LEVIER D'EMBRAYAGE	1					
8	93210–12327	.O-RING .JOINT TORIQUE	1					
9	97595–05516	.BOLT, WITH WASHER .VIS HEXAGONAL AVC RONDELLE	1					
10	6FM–48344–00	.CABLE END, REMOTE CONTROL .CHAPE CABLE	1					
11	90468–18008	.CLIP .JONC	1					
12	6FM–48344–00	.CABLE END, REMOTE CONTROL .CHAPE CABLE	1					
13	90468–18008	.CLIP .JONC	1					
14	6DR–42761–10	.STOPPER .PLAQUETTE	1					
15	6DR–42725–11	.GROMMET .PASSE-FIL	1					
16	68T–42725–11	.GROMMET .PASSE-FIL	1					
17	63V–48511–01	HOOK, STEERING ATTACHE, DIRECTION	1					AP AP
18	97E95–08535	BOLT, HEXAGON W/W DEEP RECESS VIS HEXAGONAL AVC RONDELLE	1					AP AP
19	90185–08057	NUT, SELF-LOCKING ECROU,AUTO-BLOQUANT	1					AP AP

FIG. 22 BRACKET 1 SUPPORT 1

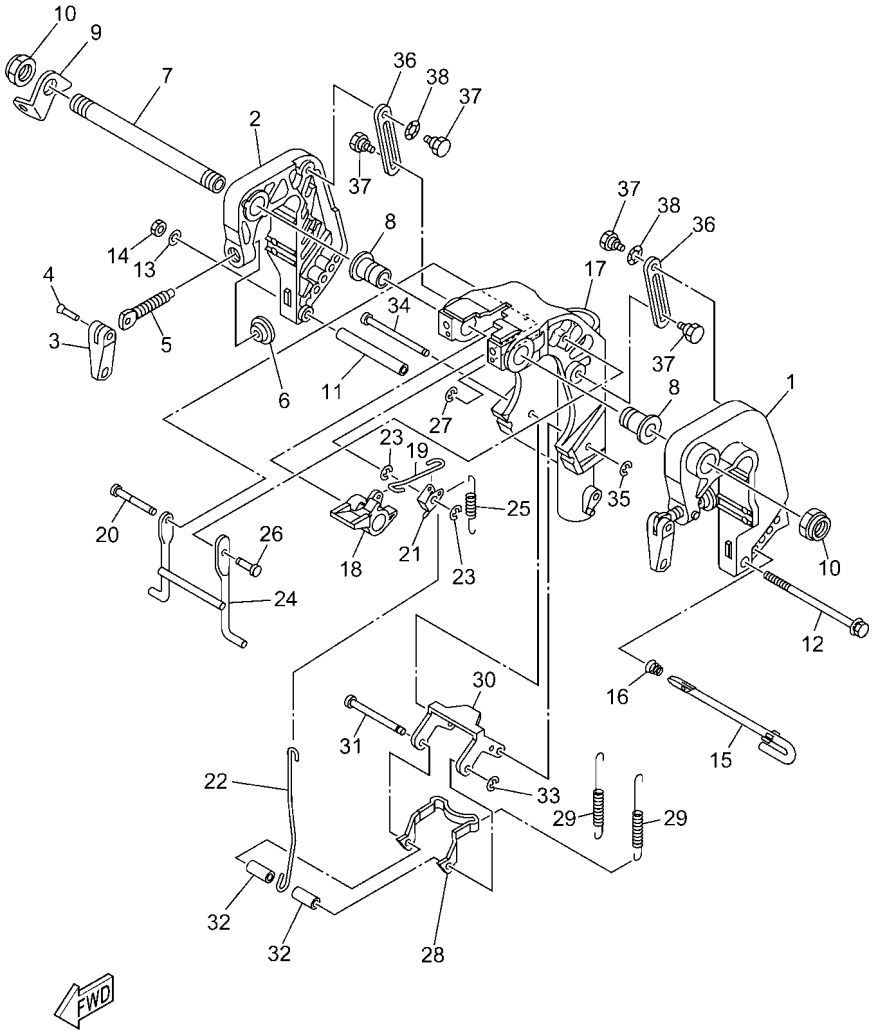

6DRC100-X190

REF. NO.	PART NO. N° PIECES	DESCRIPTION DESCRIPTION	MH	E				REMARKS REMARQUES
1	6AH–43111–00–8D	BRACKET, CLAMP 1 PRESSE 1	1	1				
2	6AH–43112–00–8D	BRACKET, CLAMP 2 PRESSE 2	1	1				
3	6E0–43118–01	HANDLE, TRANSOM CLAMP POIGNEE DE VIS DE PRESSE	2	2				
4	90243–04M01	PIN GOUPILLE	2	2				
5	6E7–43116–00	SCREW, TRANSOM CLAMP VIS DE PRESSE	2	2				
6	648–43114–01	PAD, TRANSOM CLAMP RONDELLE D'APPUI	2	2				
7	69A–43131–00	BOLT, CLAMP BRACKET BOULON, PRESSE	1	1				FOR RIDE GUIDE FOR RIDE GUIDE
8	90386–22MA4	BUSH DOUILLE	2	2				
9	66R–43113–00	PLATE, CLAMP BRACKET PLAQUETTE, PRESSE	1	1				
10	90185–22043	NUT, SELF-LOCKING ECROU,AUTO-BLOQUANT	2	2				
11	90387–06369	COLLAR COLLERETTE	1	1				
12	90101–06M18	BOLT BOULON	1	1				
13	92995–06600	WASHER RONDELLE	1	1				
14	95380–06700	NUT ECROU	1	1				
15	6L2–43160–01	TILT ROD ASSY BROCHE D'INCLINAISON (ENS.)	1	1				
16	90502–10M07	SPRING, CONICAL RESSORT, CONIQUE	1	1				
17	6AH–43311–00–8D	BRACKET, SWIVEL 1 SUPPORT, PIVOT 1	1					S(17.0") S(17.0")
	6AU–43311–10–8D	BRACKET, SWIVEL 1 SUPPORT, PIVOT 1	1	1				L(22.0") L(22.0")
18	6DR–43631–00	LEVER, TILT LEVIER, INCLINAISON	1	1				
19	6DR–43616–00	ROD, TILT LOCK TIGE	1	1				
20	68T–43646–00	SHAFT, LEVER AXE, LEIVER	1	1				
21	6DR–43641–00	LEVER, TILT LEVIER, INCLINAISON	1	1				
22	6AH–43617–00	ROD, TILT LOCK TIGE	1	1				
23	99080–05600	CIRCLIP CIRCLIP	2	2				
24	6AH–43350–00	RECEIVER ASSY RECEIVER ASSY	1	1				
25	90506–18014	SPRING, TENSION RESSORT, TENSION	1					S(17.0") S(17.0")
	90506–20025	SPRING, TENSION RESSORT, TENSION	1	1				L(22.0") L(22.0")

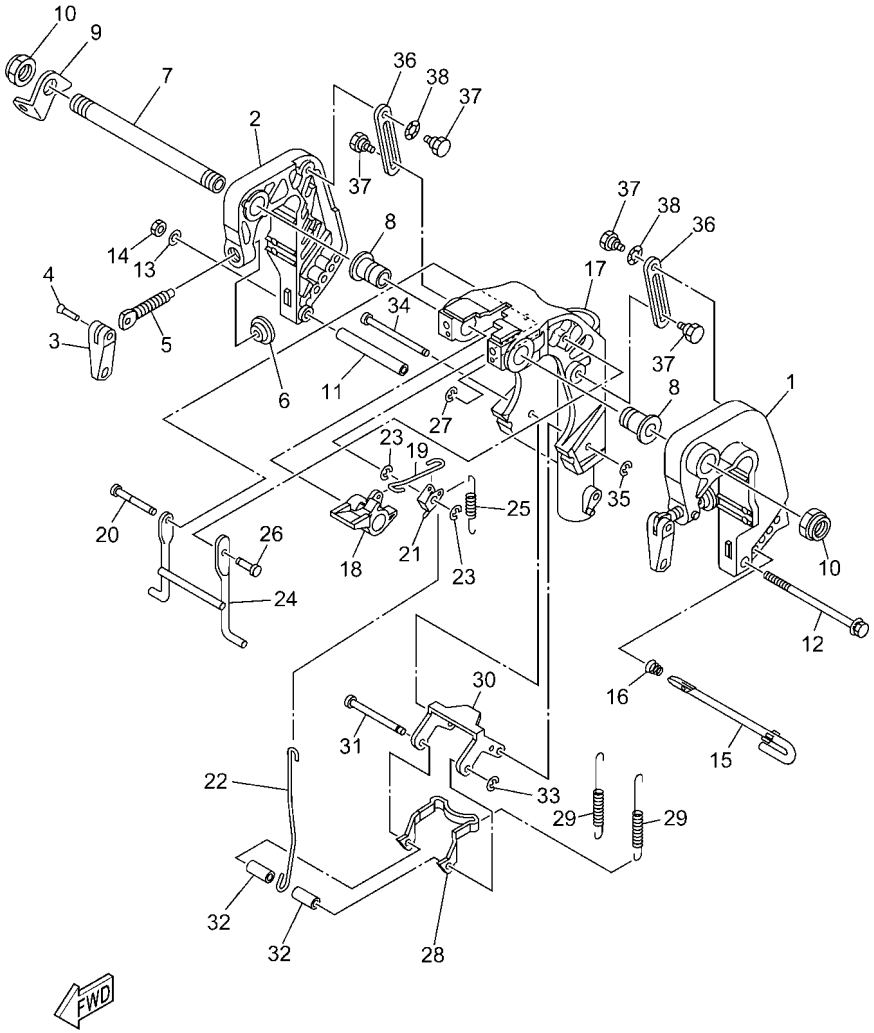

6DRC100-X190

FIG. 22 BRACKET 1 SUPPORT 1

REF. NO.	PART NO. N° PIECES	DESCRIPTION DESCRIPTION	MH	E				REMARKS REMARQUES
26	63V–43191–00	SHAFT, STOPPER AXE, BUTEE	1	1				
27	99080–05600	CIRCLIP CIRCLIP	1	1				
28	6AH–43614–00	PLATE, TILT LOCK ETRIER, VERROUILLAGE MARCHE AR	1	1				
29	90506–20020	SPRING, TENSION RESSORT, TENSION	2					S(17.0") S(17.0")
	90506–23016	SPRING, TENSION RESSORT, TENSION	2	2				L(22.0") L(22.0")
30	6AH–43615–00	PLATE, TILT LOCK ETRIER, VERROUILLAGE MARCHE AR	1	1				
31	68T–43611–00	SHAFT, TILT LOCK AXE, VERROUILLAGE MARCHE AR	1	1				
32	90387–06138	COLLAR COLLERETTE	2	2				
33	93430–04M03	CIRCLIP CLIPS	1	1				
34	68T–43659–00	SHAFT, REVERSE LOCK AXE, VERROUILLAGE MARCHE AR	1	1				
35	99080–05600	CIRCLIP CIRCLIP	1	1				
36	6AH–43627–00	STOPPER PLAQUETTE	2	2				
37	90109–06M84	BOLT BOULON	4	4				
38	90206–10M24	WASHER, WAVE RONDELLE, ONDULEE	2	2				

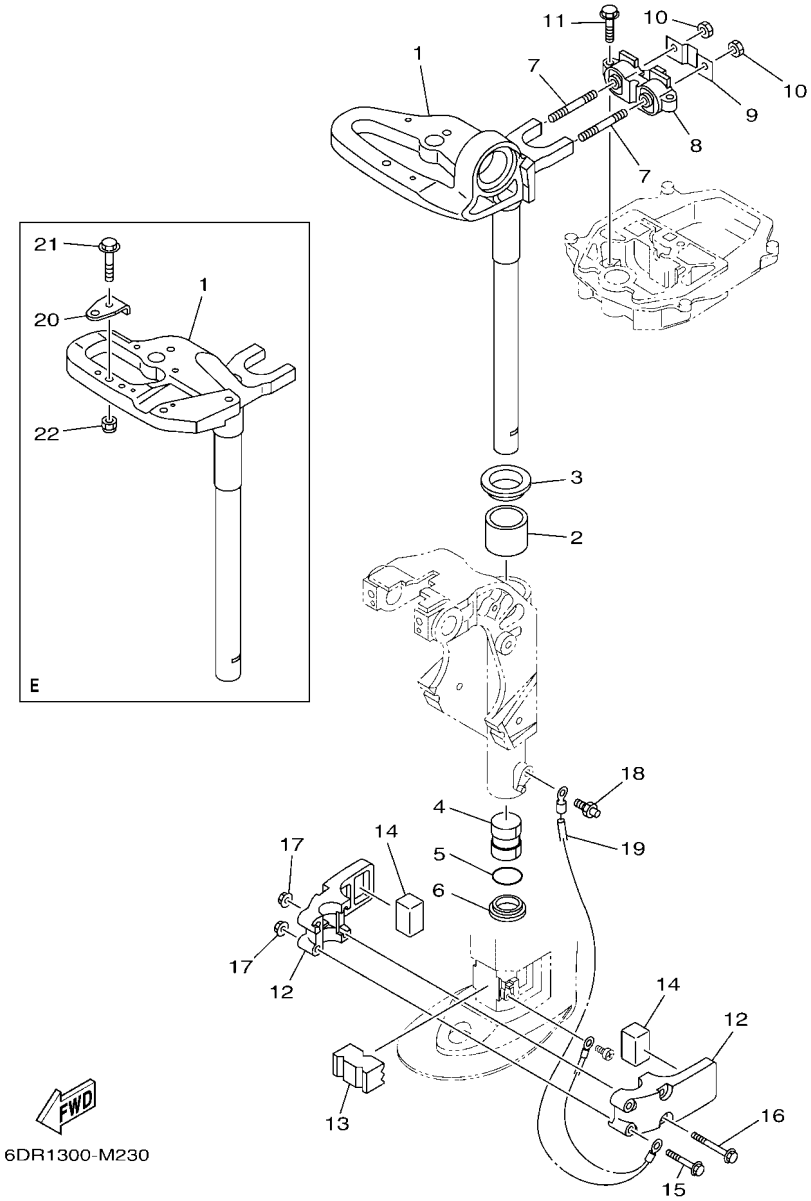

FIG. 23 BRACKET 2 — SUPPORT 2

REF. NO.	PART NO. N° PIECES	DESCRIPTION DESCRIPTION	MH	E				REMARKS REMARQUES
1	6DR–42511–00–8D	BRACKET, STEERING CADRE, DIRECTION	1					S(17.0") S(17.0")
	6DR–42511–10–8D	BRACKET, STEERING CADRE, DIRECTION	1					L(22.0") L(22.0")
	6AU–42511–10–8D	BRACKET, STEERING CADRE, DIRECTION		1				L(22.0") L(22.0")
2	90386–40001	BUSH DOUILLE	1	1				
3	90209–40008	WASHER RONDELLE	1	1				
4	90386–30048	BUSH DOUILLE	1	1				
5	93210–29M94	O-RING JOINT TORIQUE	1	1				
6	90386–30M60	BUSH DOUILLE	1	1				
7	90116–08M54	BOLT, STUD GOUJON	2	2				
8	68T–44517–00	MOUNT RUBBER SILENT-BLOC	1	1				
9	68T–44526–00	PLATE PLAQUE	1	1				
10	95380–08600	NUT ECROU	2	2				
11	97E75–06525	BOLT, HEXAGON W/W DEEP RECESS VIS HEXAGONAL AVC RONDELLE	2	2				
12	6AU–44551–00–8D	HOUSING, LOWER MOUNT RUBBER 1 BOITIER, SILENT-BLOC INFERIEUR	2	2				
13	6AU–44557–01	MOUNT DAMPER, LOWER FRONT SILENT-BLOC, INFERIEUR AVANT	1	1				
14	682–44555–30	MOUNT DAMPER, LOWER SIDE SILENT-BLOC, INFERIEUR LATERAL	2	2				
15	90119–06012	BOLT, WITH WASHER BOULON, AVEC RONDELLE	2	2				
16	90119–06198	BOLT, WITH WASHER BOULON, AVEC RONDELLE	2	2				
17	90179–06M28	NUT ECROU	4	4				
18	93700–06004	NIPPLE, GREASE PION	1	1				
19	68T–82127–00	WIRE, LEAD 2 FIL 2	1	1				
20	63V–48511–01	HOOK, STEERING ATTACHE, DIRECTION		1				
21	97E95–08535	BOLT, HEXAGON W/W DEEP RECESS VIS HEXAGONAL AVC RONDELLE		1				
22	90185–08057	NUT, SELF-LOCKING ECROU,AUTO-BLOQUANT		1				

FIG. 24 UPPER CASING FOURREAU

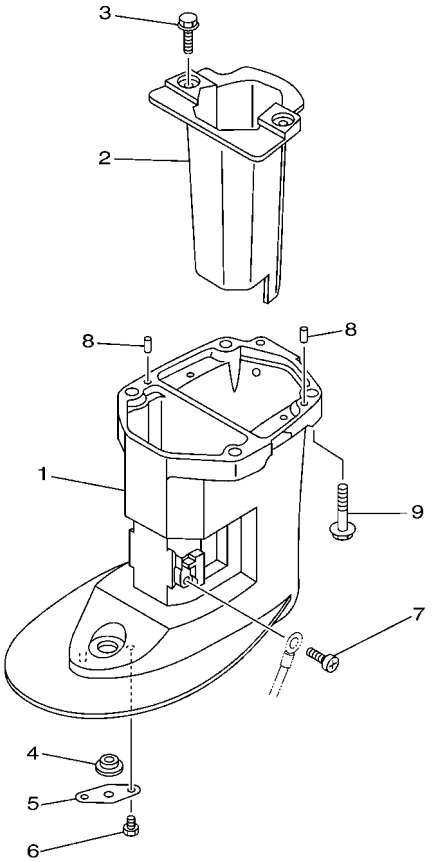

6AU4110-K250

REF. NO.	PART NO. N° PIECES	DESCRIPTION DESCRIPTION	MH	E				REMARKS REMARQUES
1	6AU–45111–00–8D	CASING, UPPER FOURREAU	1					S(17.0") S(17.0")
	6AU–45111–10–8D	CASING, UPPER FOURREAU	1	1				L(22.0") L(22.0")
2	6AU–14711–00–CA	MUFFLER 1 POT D'ECHAPPEMENT 1	1	1				
3	97E75–06514	BOLT, HEXAGON W/W DEEP RECESS VIS HEXAGONAL AVC RONDELLE	2	2				
4	90480–14M54	GROMMET PASSE-FIL	1	1				
5	68T–45321–00	PLATE PLAQUETTE	1	1				
6	97D95–06008	BOLT, HEXAGON DEEP RECESS VIS HEXAGONAL	1	1				
7	97885–05008	SCREW, PAN HEAD VIS, A ENCOCHE	1	1				
8	93604–12M07	PIN, DOWEL CLAVETTE	2	2				
9	97E95–08535	BOLT, HEXAGON W/W DEEP RECESS VIS HEXAGONAL AVC RONDELLE	4	4				

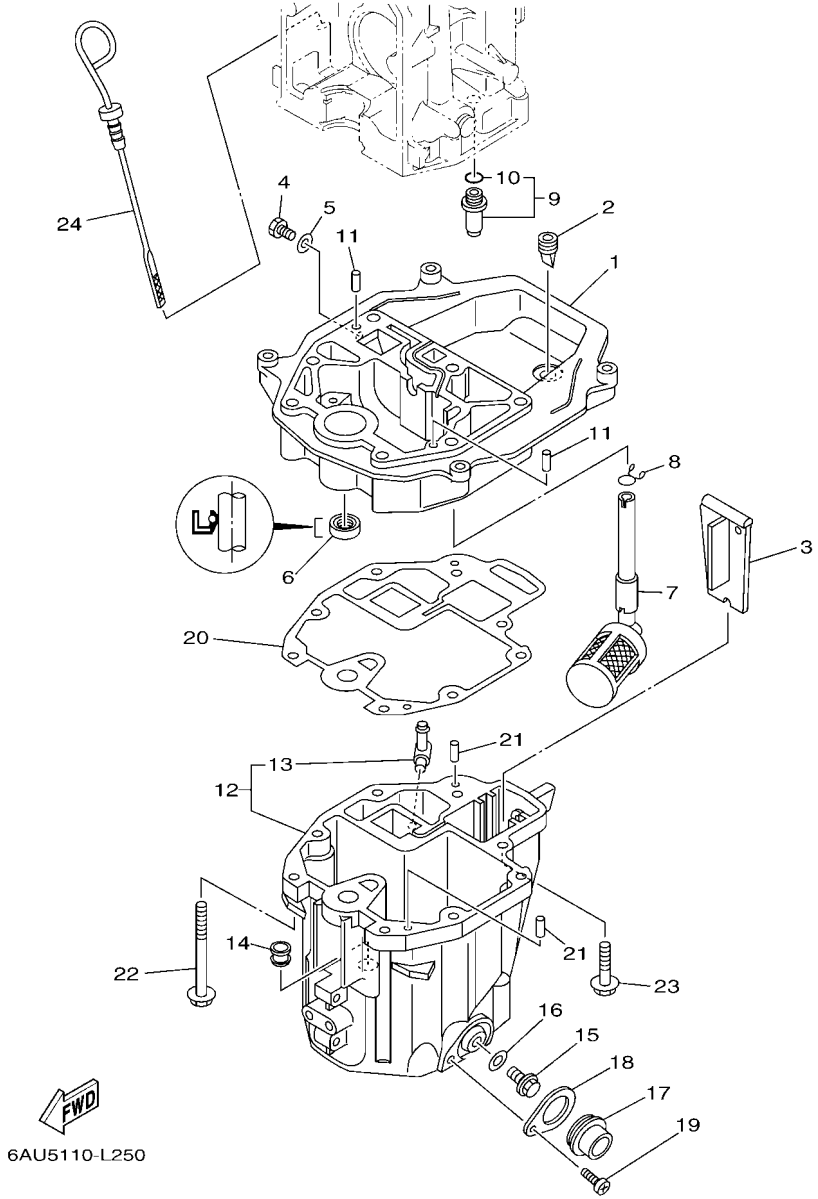

FIG. 25 OIL PAN — VENTILATEUR D'HUILE

REF. NO.	PART NO. N° PIECES	DESCRIPTION DESCRIPTION	MH	E				REMARKS REMARQUES
1	68T–41137–00–CA	GUIDE, EXHAUST COLLECTEUR D'ECHAPPEMENT	1	1				
2	65W–42717–00	RUBBER, SEAL 2 JOINT EN CAOUTCHOUC 2	1	1				
3	68T–45181–00	PLATE PLAQUETTE	1	1				
4	97D95–08014	BOLT, HEXAGON DEEP RECESS VIS HEXAGONAL	1	1				
5	90430–08143	GASKET JOINT	1	1				
6	93101–12M70	OIL SEAL JOINT SPY	1	1				
7	68T–13421–01	STRAINER 2 FILTRE 2	1	1				
8	90467–11M08	CLIP JONC	1	1				
9	6G8–11575–00	RELIEF VALVE ASSY SOUPAPE DE RENTREE D'AIR	1	1				
10	93210–12M62	.O-RING .JOINT TORIQUE	1	1				
11	93606–19M23	PIN, DOWEL GOUPILLE	2	2				
12	68T–15311–01–CA	OIL PAN VENTILATEUR D'HUILE	1	1				
13	6H1–11372–00	.NIPPLE, HOSE .RACCORD, TUYAU	1	1				
14	90480–10M28	GROMMET PASSE-FIL	1	1				
15	90340–10M10	PLUG, STRAIGHT SCREW PLOT, FILETE DROIT	1	1				
16	90430–10M11	GASKET JOINT	1	1				
17	68T–15316–00	DAMPER 1 AMORTISSEUR 1	1	1				
18	68T–15317–00	SPACER, ENGINE MOUNT ENTRETOISE DE SUPPORT	1	1				
19	97885–05008	SCREW, PAN HEAD VIS, A ENCOCHE	1	1				
20	68T–13475–00	GASKET JOINT	1	1				
21	93604–12M07	PIN, DOWEL CLAVETTE	2	2				
22	90119–08201	BOLT, WITH WASHER BOULON, AVEC RONDELLE	6	6				
23	97E95–08530	BOLT, HEXAGON W/W DEEP RECESS VIS HEXAGONAL AVC RONDELLE	2	2				
24	68T–15362–00	PLUG, OIL LEVEL PLOT, NIVEAU D'HUILE	1	1				

FIG. 26 LOWER CASING & DRIVE 1 — BOITIER D'HELICE TRANSMISSION1

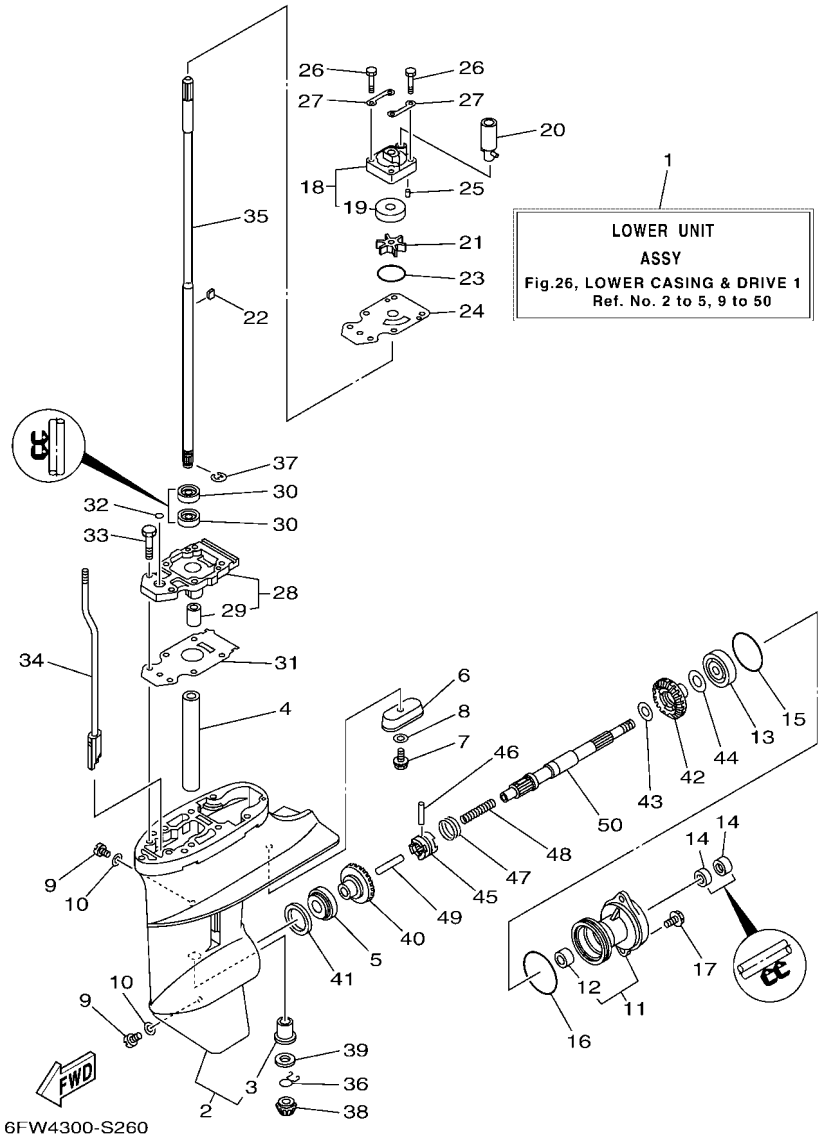

REF. NO.	PART NO. N° PIECES	DESCRIPTION DESCRIPTION	MH	E				REMARKS REMARQUES
1	6AU–45300–05–8D	LOWER UNIT ASSY UNITE INFERIEURE (ENS.)	1					S(17.0") S(17.0")
	6AU–45300–15–8D	LOWER UNIT ASSY UNITE INFERIEURE (ENS.)	1	1				L(22.0") L(22.0")
2	6AU–45311–01–8D	CASING, LOWER BOITIER D'HELICE	1	1				
3	6G1–45317–09	.BUSHING, DRIVE SHAFT .DOUILLE, ARBRE MOTEUR	1	1				
4	90387–14M49	COLLAR COLLERETTE	1	1				
5	93306–004U0	BEARING ROULEMENT	1	1				
6	68T–45251–00	ANODE ANODE	1	1				
7	95D95–06016	BOLT, FLANGE DEEP RECESS BOULON FIXATION	1	1				
8	92990–06300	WASHER, INTERNAL TOOTH RONDELLE, DENTURE INTERNE	1	1				
9	90340–08002	PLUG, STRAIGHT SCREW PLOT, FILETE DROIT	2	2				
10	90430–08003	GASKET JOINT	2	2				
11	6G1–45361–01–8D	CAP, LOWER CASING COUVERCLE, BOITIER D'HELICE	1	1				
12	6G1–45362–09	.BUSHING .COUSSINET	1	1				
13	93306–004U0	BEARING ROULEMENT	1	1				
14	93101–15074	OIL SEAL JOINT SPY	2	2				
15	93210–49046	O-RING JOINT TORIQUE	1	1				
16	93210–53M08	O-RING JOINT TORIQUE	1	1				
17	97E95–06516	BOLT, HEXAGON W/W DEEP RECESS VIS HEXAGONAL AVC RONDELLE	2	2				
18	63V–44301–00	WATER PUMP HOUSING COMP. CARTER, POMPE A EAU (ENS)	1	1				
19	63V–44322–00	.INSERT, CARTRIDGE .CUVETTE	1	1				
20	68T–44366–01	DAMPER, WATER SEAL 2 JOINT, TUBE D'EAU 2	1	1				
21	68T–44352–00	IMPELLER TURBINE	1	1				
22	664–44338–00	KEY, WOODRUFF CLAVETTE, VOLANT	1	1				
23	93210–44398	O-RING JOINT TORIQUE	1	1				
24	68T–44323–00	OUTER PLATE, CARTRIDGE PLAQUE EXTERIEURE	1	1				
25	93604–12M07	PIN, DOWEL CLAVETTE	2	2				
26	97D95–08045	BOLT, HEXAGON DEEP RECESS VIS HEXAGONAL	4	4				

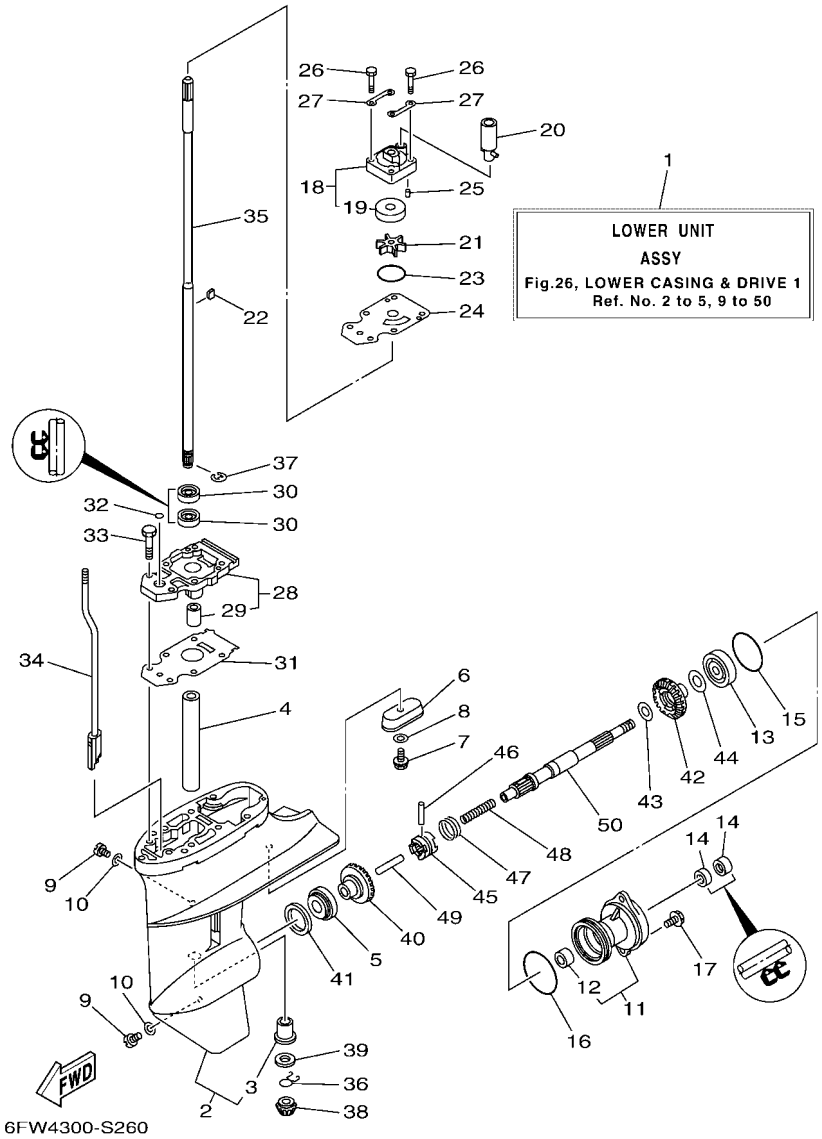

FIG. 26 LOWER CASING & DRIVE 1 — BOITIER D'HELICE TRANSMISSION1

REF. NO.	PART NO. N° PIECES	DESCRIPTION DESCRIPTION	MH	E				REMARKS REMARQUES
27	63V–44328–01	PLATE PLAQUETTE	2	2				
28	68T–45331–01–CA	HOUSING, BEARING FLASQUE, ROULEMENT	1	1				
29	6G1–45316–09	.BUSHING, DRIVE SHAFT .DOUILLE, ARBRE MOTEUR	1	1				
30	93101–11M23	OIL SEAL JOINT SPY	2	2				
31	68T–45315–A0	PACKING, LOWER CASING JOINT, BOITIER D'HELICE	1	1				
32	93210–06ME6	O-RING JOINT TORIQUE	1	1				
33	97080–08025	BOLT BOULON	2	2				
34	68T–44150–01	SHIFT CAM ASSY CAME D'INVERSION	1	1				
35	6AU–45511–00	SHAFT, DRIVE ARBRE, MOTEUR	1					S(17.0") S(17.0")
	6AU–45511–10	SHAFT, DRIVE ARBRE, MOTEUR	1	1				L(22.0") L(22.0")
36	90467–09M05	CLIP JONC	1	1				
37	99001–07600	CIRCLIP CIRCLIP	1	1				
38	68T–45551–00	PINION (13T) PIGNON D'ATTAQUE (13D)	1	1				
39	6G1–45533–00	SHIM (T:1.90MM) CALE (T:1.90MM)	1	1				UR UR
	6G1–45533–10	SHIM (T:2.00MM) CALE (T:2.00MM)	1	1				UR UR
	6G1–45533–20	SHIM (T:2.10MM) CALE (T:2.10MM)	1	1				UR UR
	6G1–45533–30	SHIM (T:2.20MM) CALE (T:2.20MM)	1	1				UR UR
40	68T–45560–00	GEAR 1 (27T) PIGNON 1 (27T)	1	1				
41	664–45587–01	SHIM (T:0.10MM) CALE (T:0.10MM)	1	1				UR UR
	664–45587–10	SHIM (T:0.12MM) CALE (T:0.12MM)	1	1				UR UR
	664–45587–20	SHIM (T:0.15MM) CALE (T:0.15MM)	1	1				UR UR
	664–45587–30	SHIM (T:0.18MM) CALE (T:0.18MM)	1	1				UR UR
	664–45587–40	SHIM (T:0.30MM) CALE (T:0.30MM)	1	1				UR UR
	664–45587–50	SHIM (T:0.40MM) CALE (T:0.40MM)	1	1				UR UR
	664–45587–60	SHIM (T:0.50MM) CALE (T:0.50MM)	1	1				UR UR
42	68T–45571–00	GEAR 2 (27T) PIGNON 2 (27T)	1	1				
43	90201–15M89	WASHER, PLATE RONDELLE, PLATE	1	1				

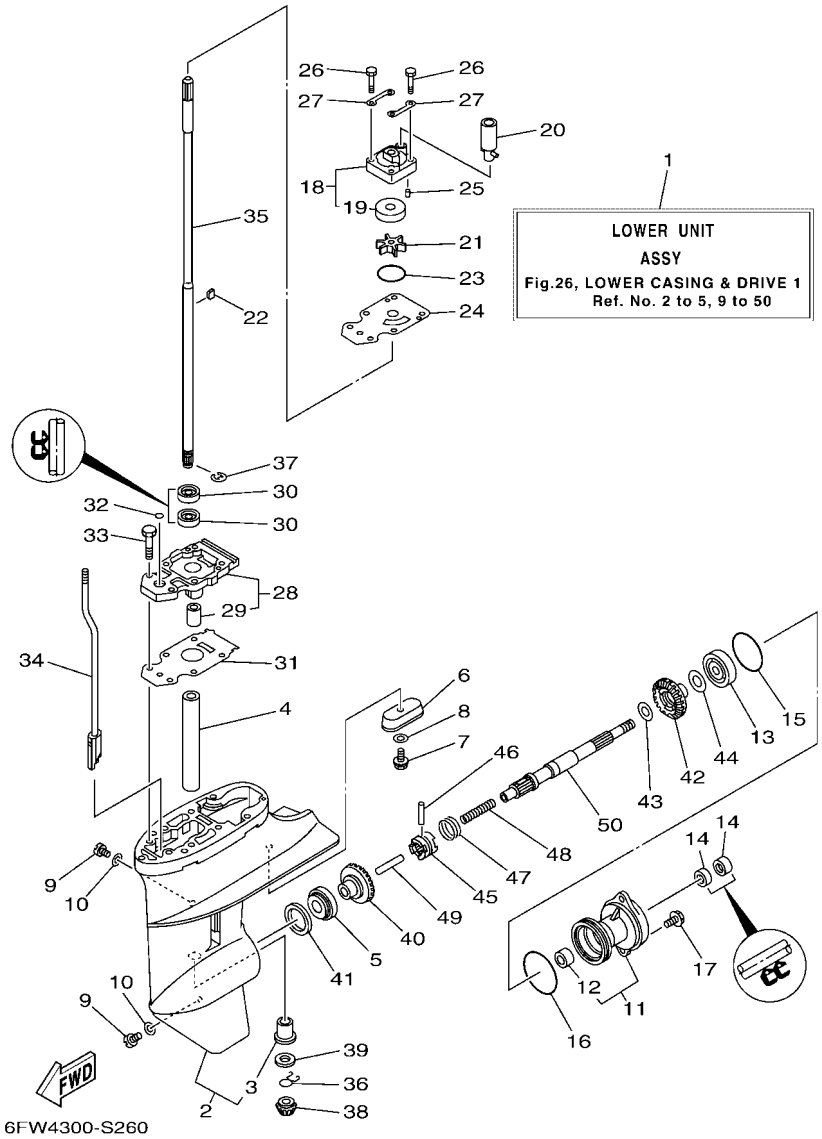

FIG. 26 LOWER CASING & DRIVE 1 — BOITIER D'HELICE TRANSMISSION1

REF. NO.	PART NO. N° PIECES	DESCRIPTION DESCRIPTION	MH	E				REMARKS REMARQUES
44	647–45567–00	SHIM (T:0.10MM) CALE (T:0.10MM)	1	1				UN UN
45	68T–45631–00	CLUTCH, DOG CRABOT	1	1				
46	6G1–45632–00	PIN, CROSS GOUPILLE DE CRABOT	1	1				
47	654–45633–00	RING, CROSS PIN JONC, GOUPILLE CRABOT	1	1				
48	90501–140A1	SPRING, COMPRESSION RESSORT, COMPRESSION	1	1				
49	6G1–45635–00	PLUNGER, SHIFT POUSSOIR D'EMBRAYAGE	1	1				
50	68T–45611–00	SHAFT, PROPELLER ARBRE, HELICE	1	1				

FIG. 27 LOWER CASING & DRIVE 2 — BOITIER D'HELICE TRANSMISSION2

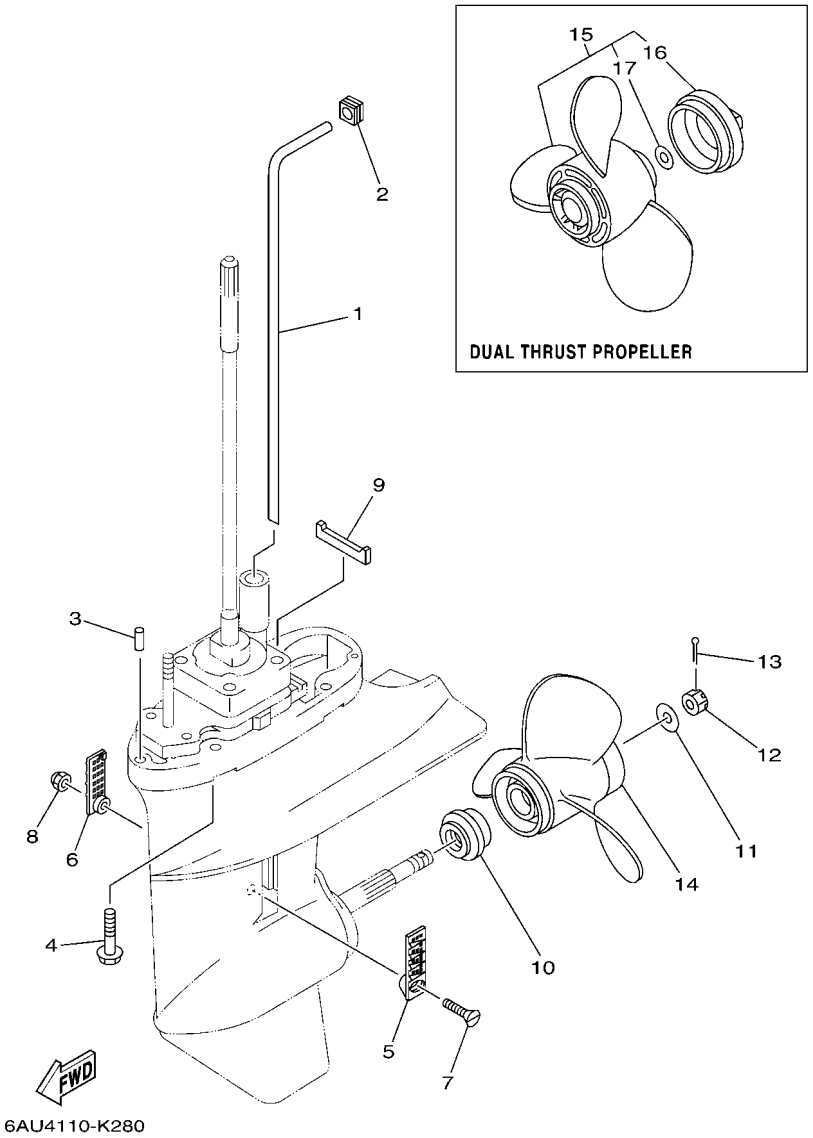

REF. NO.	PART NO. N° PIECES	DESCRIPTION DESCRIPTION	MH	E				REMARKS REMARQUES
1	68T–44361–00	TUBE, WATER 1 TUBE D'EAU 1	1					S(17.0") S(17.0")
	68T–44361–10	TUBE, WATER 1 TUBE D'EAU 1	1	1				L(22.0") L(22.0")
2	63V–44365–11	DAMPER, WATER SEAL 1 JOINT, TUBE D'EAU 1	1	1				
3	93604–12M07	PIN, DOWEL CLAVETTE	2	2				
4	97E95–08535	BOLT, HEXAGON W/W DEEP RECESS VIS HEXAGONAL AVC RONDELLE	4	4				
5	6G1–45214–00	COVER, WATER INLET 1 GRILLE, ENTREE D'EAU 1	1	1				
6	6G1–45215–00	COVER, WATER INLET 2 GRILLE, ENTREE D'EAU 2	1	1				
7	90152–05M03	SCREW, COUNTERSUNK VIS, TETE NOYEE	1	1				
8	90185–05002	NUT, NYLON ECROU,AUTO-BLOQUANT	1	1				
9	63V–45375–00	DAMPER, SEAL BOURRELET, CAOUTCHOUC	1	1				
10	6G1–45987–02	SPACER 1 ENTRETOISE 1	1	1				
11	90201–10M01	WASHER, PLATE RONDELLE, PLATE	1	1				
12	90171–10M01	NUT, CASTLE ECROU, CRENELE	1	1				
13	91490–30025	PIN. COTTER GOUPILLE	1	1				
14	6G1–45947–00	PROPELLER (3X8-1/2"X6-1/2"-N) HELICE (3X8-1/2"X6-1/2"-N)	1	1				UR UR
	6G1–45943–00	PROPELLER (3X8-1/2"X7-1/2"-N) HELICE (3X8-1/2"X7-1/2"-N)	1	1				UR UR
	6G1–45952–00	PROPELLER (3X8-1/2"X8"-N) HELICE (3X8-1/2"X8"-N)	1	1				UR UR
	6G1–45941–00	PROPELLER (3X8-1/2"X8-1/2"-N) HELICE (3X8-1/2"X8-1/2"-N)	1	1				UR UR
	6G1–45954–00	PROPELLER (3X8-1/2"X9-1/4"-N) HELICE (3X8-1/2"X9-1/4"-N)	1	1				UR UR
15	6G1–W4592–00	PROPELLER (3X9"X5"-N) HELICE (3X9"X5"-N)	1	1				UR UR
	6G1–W4591–01	PROPELLER (3X9"X7"-N) HELICE (3X9"X7"-N)	1	1				UR UR
16	6G1–45616–01	.NUT, PROPELLER .CONE, HELICE	1	1				
17	90201–10M02	.WASHER, PLATE .RONDELLE, PLATE	1	1				

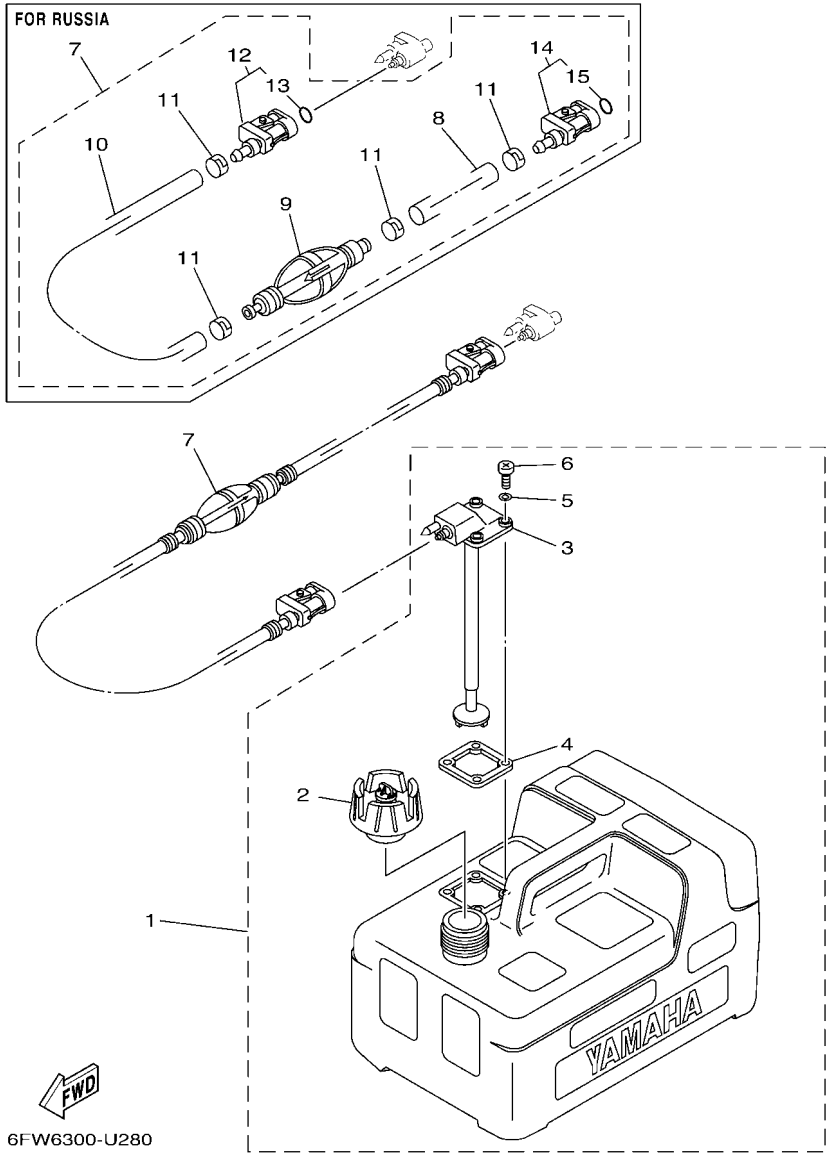

FIG. 28 FUEL TANK — RESERVOIR A CARBURANT

REF. NO.	PART NO. N° PIECES	DESCRIPTION DESCRIPTION	MH	E				REMARKS REMARQUES
1	6YL–24201–07	FUEL TANK ASSY (12L) RESERVOIR A ESSENCE (ENS.) 12L	1	1				AP AP
2	6YK–24610–10	.CAP ASSY .BOUCHON	1	1				WITHOUT INDICATOR WITHOUT INDICATOR
3	6YL–24260–10	.FUEL METER ASSY .INDICATEUR DE CARBURANT	1	1				
4	6YL–24268–01	.GASKET, FUEL METER .JOINT, JAUGE A CARBURANT	1	1				
5	6YL–24329–00	.SEAL .JOINT	4	4				
6	90157–05M16	.SCREW, PAN HEAD .VIS, TETE TRONCONIQUE	4	4				
7	6YL–24306–54	FUEL PIPE COMP. 1 DURITE A ESSENCE 1	1	1				AP EXCEPT FOR RUS AP EXCEPT FOR RUS
	61J–24306–05	FUEL PIPE COMP. 1 DURITE A ESSENCE 1	1					AP FOR RUS AP FOR RUS
8	90445–11M58	.HOSE (L2050) .DURITE (L2050)	1					
9	61J–24360–00	.PRIMER PUMP ASSY .POMPE D'AMORCAGE	1					
10	90445–11M57	.HOSE (L850) .DURITE (L850)	1					
11	650–24351–51	.BAND 1 .COLLIER 1	4					
12	6G1–24305–05	.FUEL PIPE JOINT COMP. 2 .DURITE RACCORDEMT. A ESSENCE	1					
13	93210–08287	..O-RING ..JOINT TORIQUE	1					
14	6Y1–24305–06	.FUEL PIPE JOINT COMP. 2 .DURITE RACCORDEMT. A ESSENCE	1					
15	93210–08287	..O-RING ..JOINT TORIQUE	1					

FIG. 29 STEERING GUIDE — FIXATION DE DIRECTION

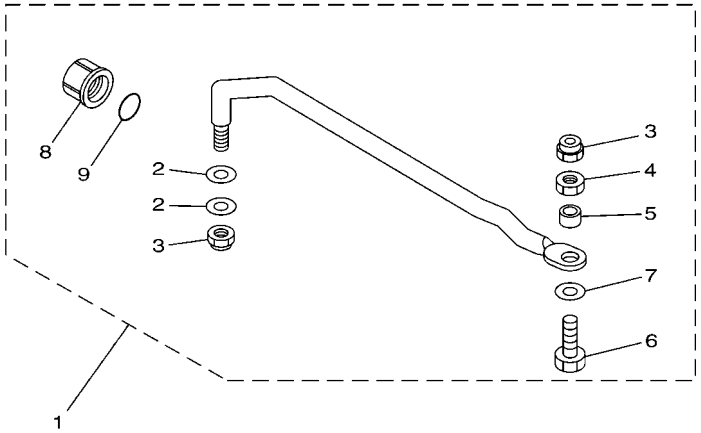

6AU1100-G300

REF. NO.	PART NO. N° PIECES	DESCRIPTION DESCRIPTION	MH	E				REMARKS REMARQUES
1	68T–61350–10	STEERING GUIDE ATTACHMENT KIT FIXATIONS DE DIRECTION	1	1				AP AP
2	90201–10M20	.WASHER, PLATE .RONDELLE, PLATE	2	2				
3	90185–09M01	.NUT, SELF-LOCKING .ECROU,AUTO-BLOQUANT	2	2				
4	90170–09M03	.NUT .ECROU	1	1				
5	90387–10M42	.COLLAR .COLLERETTE	1	1				
6	6E5–61355–00	.BOLT .BOULON	1	1				
7	90201–10081	.WASHER, PLATE .RONDELLE, PLATE	1	1				
8	6E5–43145–01	.CAP, CLAMP BRACKET .CAPUCHON, PRESSE	1	1				
9	93210–16275	.O-RING .JOINT TORIQUE	1	1				

FIG. 30 REMOTE CONTROL BOX — BOITIER DE COMMANDE A DISTANCE

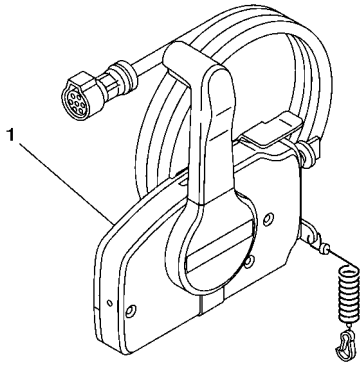

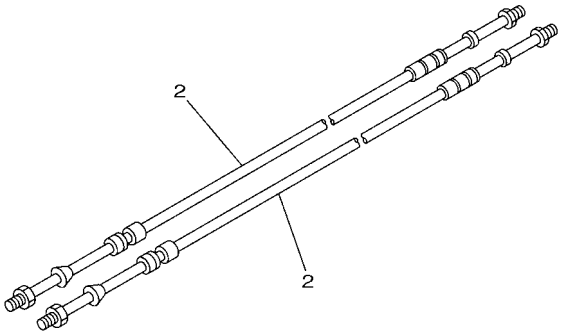

6DR3300-P300

REF. NO.	PART NO. N° PIECES	DESCRIPTION DESCRIPTION	MH	E				REMARKS REMARQUES
1	703–48201–24	REMOTE CONTROL ASSY (10P) BOITIER DE COMMANDE A DISTANCE		1				AP WITHOUT PT/T SW. AP WITHOUT PT/T SW.
2	701–48310–80	CABLE, REMOTE CONTROL L=10F CABLE, COMMANDE A DISTANCE:10F		2				UR UR
	701–48310–90	CABLE, REMOTE CONTROL L=11F CABLE, COMMANDE A DISTANCE:11F		2				UR UR
	701–48320–00	CABLE, REMOTE CONTROL L=12F CABLE, COMMANDE A DISTANCE:12F		2				UR UR

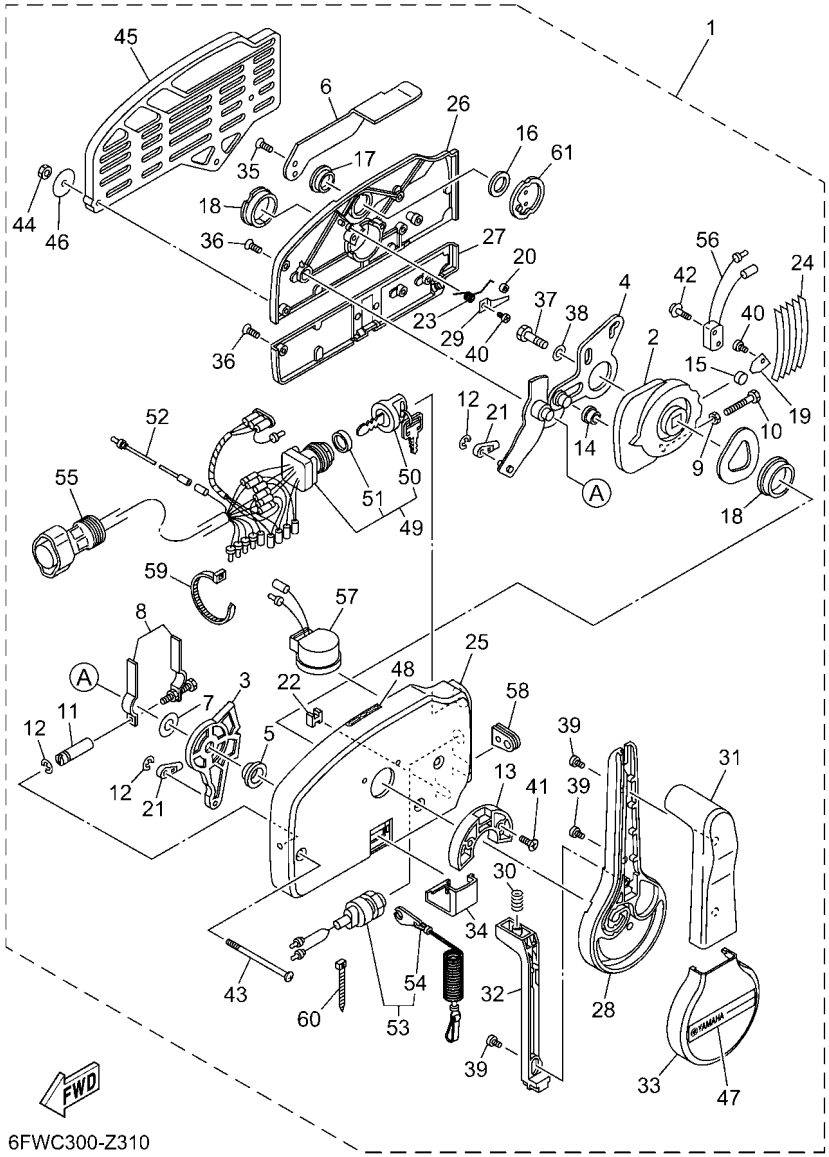

FIG. 31 REMOTE CONTROL ASSY — BOITIER DE COMMANDE A DISTANCE

REF. NO.	PART NO. N° PIECES	DESCRIPTION DESCRIPTION	MH	E				REMARKS REMARQUES
1	703–48201–24	REMOTE CONTROL ASSY (10P) BOITIER DE COMMANDE A DISTANCE		1				AP WITHOUT PT/T SW. AP WITHOUT PT/T SW.
2	703–48232–00	.GEAR .PIGNON		1				
3	703–48271–00	.ARM, SHIFT .BRAS		1				
4	703–48261–01	.ARM, THROTTLE .BRAS, ACCELERATION		1				
5	703–48235–00	.BUSHING .COUSSINET		1				
6	703–48152–10	.KNOB, FREE ACCEL. .BOUTON		1				
7	703–48268–00	.SPACER .ENTRETOISE		1				
8	703–48264–00	.FRICTION, THROTTLE .FRICTION, ACCELERATION		1				
9	95380–05600	.NUT .ECROU		1				
10	97380–05025	.BOLT .BOULON, HEXAGONAL		1				
11	703–48265–10	.SHAFT, FRICTION .AXE, COPILOTE		1				
12	93430–06024	.CIRCLIP .CLIPS		3				
13	703–48245–00	.PLATE, LOCK .PLAQUE, VERROU		1				
14	703–48252–00	.ROLLER, CAM .POULIE		1				
15	701–48248–00	.ROLLER, FREE ACCEL. .POULIE		1				
16	703–48198–00	.WASHER, WAVE .RONDELLE, ELASTIQUE ONDULEE		1				
17	703–48243–00	.BUSHING .COUSSINET		1				
18	703–48236–00	.BUSHING 1 .POULIE		2				
19	703–48189–00	.RETAINER .FLASQUE		1				
20	703–48234–00	.ROLLER, DETENT .POULIE		1				
21	703–48345–01	.CABLE END, REMOTE CONTROL 2 .CHAPE CABLE		2				
22	703–48358–01	.ANCHOR, CABLE .COLLIER		1				
23	703–48244–00	.SPRING, FREE ACCEL. .RESSORT		1				
24	703–48238–00	.SPRING, DETENT .RESSORT		5				
25	703–48211–10	.HOUSING,1 .CORPS		1				
26	703–48212–10	.BACK PLATE 1 .PLAQUETTE 1		1				
27	703–48213–10	.BACK PLATE 2 .PLAQUETTE 2		1				

FIG. 31 REMOTE CONTROL ASSY — BOITIER DE COMMANDE A DISTANCE

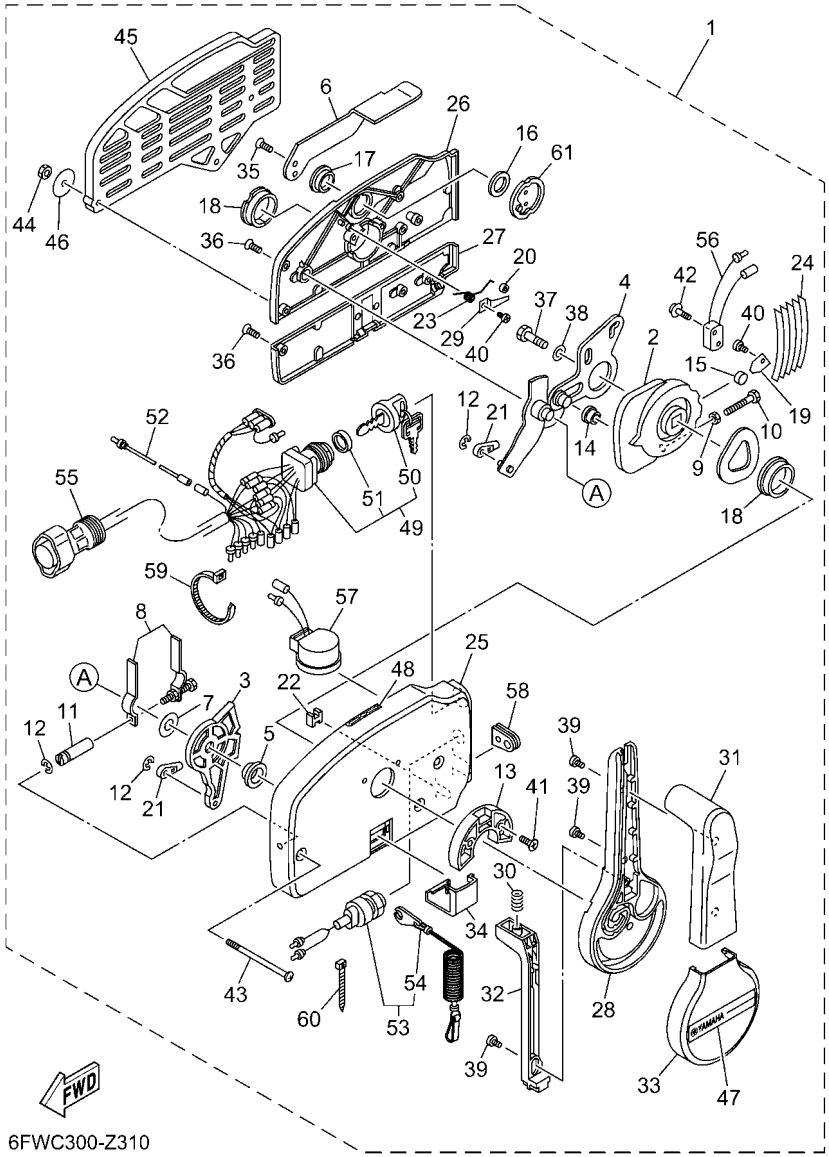

REF. NO.	PART NO. N° PIECES	DESCRIPTION DESCRIPTION	MH	E				REMARKS REMARQUES
28	703–48221–10	.LEVER, CONTROL .LEVIER, COMMANDE		1				
29	703–48246–00	.SPACER .ENTRETOISE		1				
30	703–48227–00	.SPRING, NEUTRAL LOCK .RESSORT		1				
31	703–48222–30	.GRIP, CONTROL LEVER .POIGNEE, COMMANDE LEVIER		1				SINGLE SINGLE
32	703–48223–10	.LOCK, NEUTRAL .VERROU, NEUTRAL		1				
33	703–48225–10	.COVER .COUVERCLE		1				
34	703–48219–10	.COVER, LEAD .COUVERCLE		1				
35	703–48281–00	.SCREW .VIS		2				
36	703–44189–20	.SCREW .VIS		5				
37	97380–08030	.BOLT .BOULON, HEXAGONAL		1				
38	92990–08600	.WASHER, PLATE .RONDELLE, PLATE		1				
39	703–48128–10	.SCREW 2 .VIS 2		3				
40	98580–04006	.SCREW, PAN HEAD .VIS		2				
41	703–44189–40	.SCREW .VIS		2				
42	703–48129–00	.SCREW 3 .VIS 3		2				
43	703–44189–30	.SCREW .VIS		3				
44	95380–06600	.NUT, HEXAGON .ECROU		3				
45	703–48293–11	.SPACER, REMOTE CONTROL .ENTRETOISE		1				SINGLE SINGLE
46	701–48287–00	.WASHER .RONDELLE		3				
47	703–48215–11	.GRAPHIC .ADHESIF		1				
48	6X3–44191–00	.INDICATOR, SHIFT .ETIQUETTE, EMBRAYAGE		1				
49	703–82510–45	.MAIN SWITCH ASSY .CONTACTEUR A CLEF COMPLET		1				
50	703–82577–00	..CAP, KEY ..CABOCHON		1				
51	6K1–82532–00	..CAP ..COUVERCLE		1				
52	703–82531–00	.WIRE, LEAD (L70) .FIL (L70)		1				
53	688–82575–02	.ENGINE STOP SWITCH ASSY .COUPE CIRCUIT CPLT		1				
54	682–82556–00	..LANYARD, STOP SWITCH ..CORDON DU COUPE CIRCUIT		1				

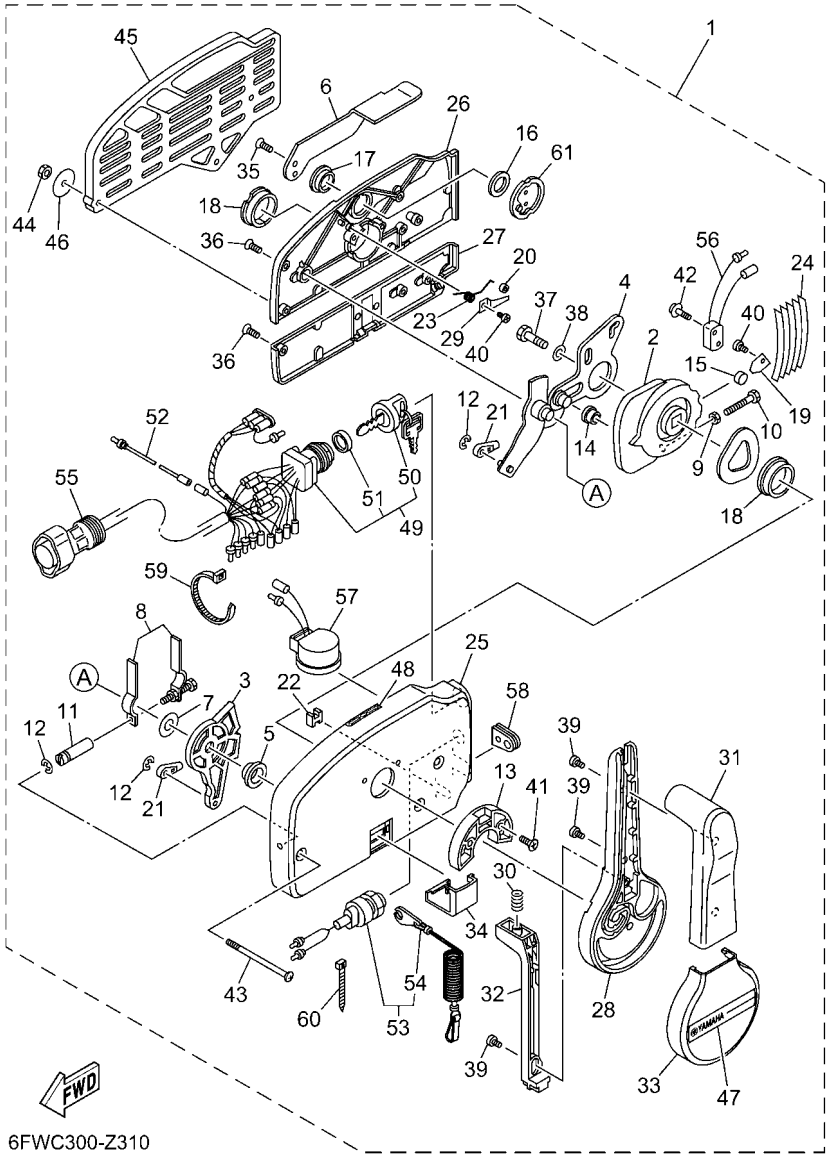

FIG. 31 REMOTE CONTROL ASSY — BOITIER DE COMMANDE A DISTANCE

REF. NO.	PART NO. N° PIECES	DESCRIPTION DESCRIPTION	MH	E				REMARKS REMARQUES
55	688–8258A–20	.EXTENSION, WIRE HARNESS (4.9M) .EXTENSION, FAISCEAU DE FILS (4		1				(10P) (10P)
56	703–82540–00	.NEUTRAL SWITCH ASSY .CONTACTEUR DE POINT-MORT		1				
57	703–83383–11	.BUZZER .RONFLEUR		1				
58	703–48284–00	.GROMMET .PASSE-FIL		1				
59	703–82591–00	.BAND .COLLIER		1				
60	703–82592–00	.BAND .COLLIER		1				
61	703–48153–00	.SHAFT, FREE ACCEL. .AXE		1				

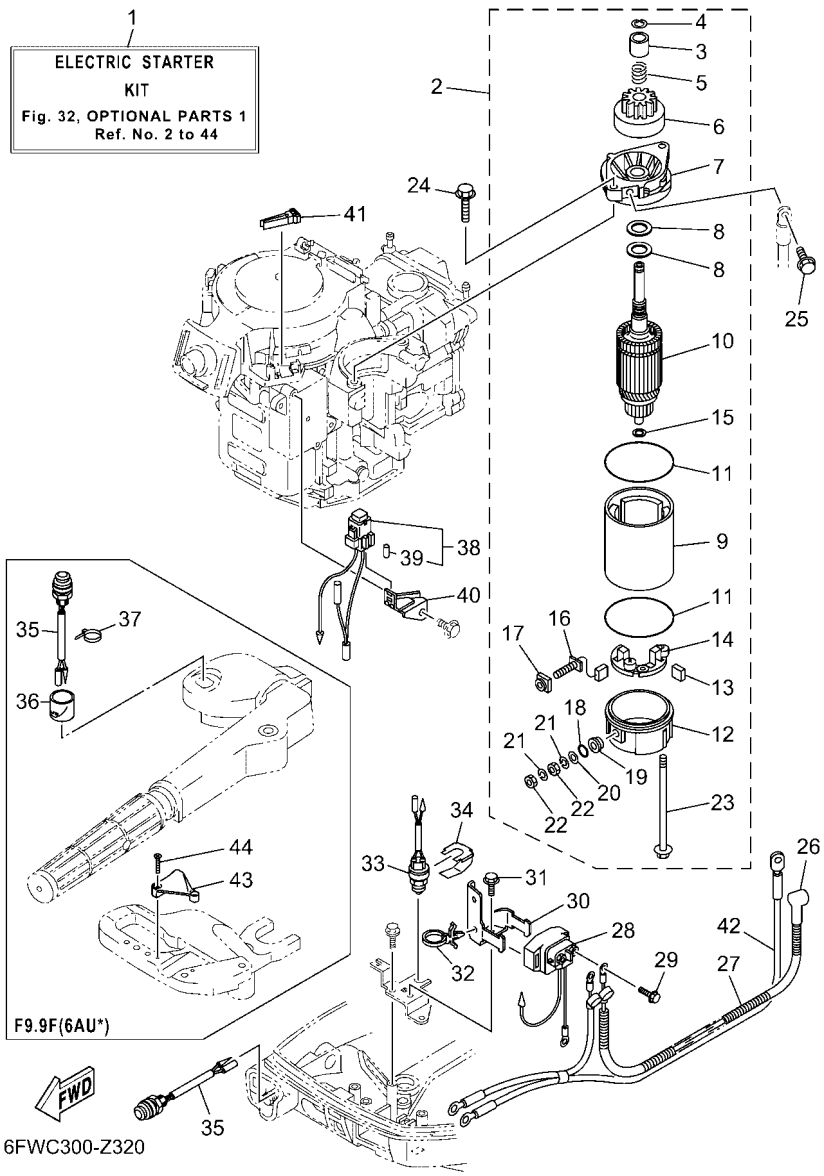

FIG. 32 OPTIONAL PARTS 1 — PIECES OPTIONNELLES 1

REF. NO.	PART NO. N° PIECES	DESCRIPTION DESCRIPTION	MH	E				REMARKS REMARQUES
1	6MC–W8180–02	ELECTRIC STARTER KIT KIT DEMARREUR ELECTRIQUE	1					
2	68T–81800–10	STARTING MOTOR ASSY DEMARREUR ELECTRIQUE COMPLET	1					
3	68T–81859–00	.STOPPER, PINION .BUTEE, PIGNON	1					
4	689–81884–00	.CLIP,PINION STOPPER .CLIP, STOPPEUR DE PIGNON	1					
5	689–81858–00	.SPRING, RETURN .RESSORT	1					
6	689–81807–20	.GEAR ASSY, STARTING MOTOR .PIGNON, DEMARREUR ELECTRIQUE	1					
7	68T–81830–00	.FRONT BRACKET ASSY .SUPPORT AVANT	1					
8	689–81835–00	.WASHER .RONDELLE	2					UN UN
9	689–81810–20	.STATOR ASSY .STATOR COMPLET	1					
10	689–81850–20	.ARMATURE ASSY .INDUIT	1					
11	689–81847–20	.O-RING .JOINT TORIQUE	2					
12	689–81820–20	.REAR BRACKET ASSY .SUPPORT ARRIERE COMPLET	1					
13	689–81812–20	.BRUSH 2 .CHARBON 2	1					
14	689–81840–20	.BRUSH HOLDER ASSY .SUPPORT DE CHARBON	1					
15	689–81824–00	.WASHER 2 .RONDELLE 2	1					
16	689–81811–20	.BRUSH 1 .CHARBON 1	1					
17	689–8182H–00	.BUSH, TERMINAL 2 .DOUILLE, BORNE 2	1					
18	689–8182L–00	.O-RING 1 .JOINT TORIQUE 1	1					
19	689–8182G–00	.BUSH, TERMINAL .BAGUE, BORNE	1					
20	689–8182E–00	.WASHER .RONDELLE	1					
21	689–8182F–00	.WASHER .RONDELLE	2					
22	689–8182A–00	.NUT .ECROU	2					
23	689–81826–20	.BOLT .BOULON	2					
24	90119–08M76	BOLT, WITH WASHER BOULON, AVEC RONDELLE	2					
25	97E95–08516	BOLT, HEXAGON W/W DEEP RECESS VIS HEXAGONAL AVC RONDELLE	1					
26	6G8–82117–01	WIRE, LEAD FIL	1					
27	90446–10M86	HOSE (L140) DURITE (L140)	1					

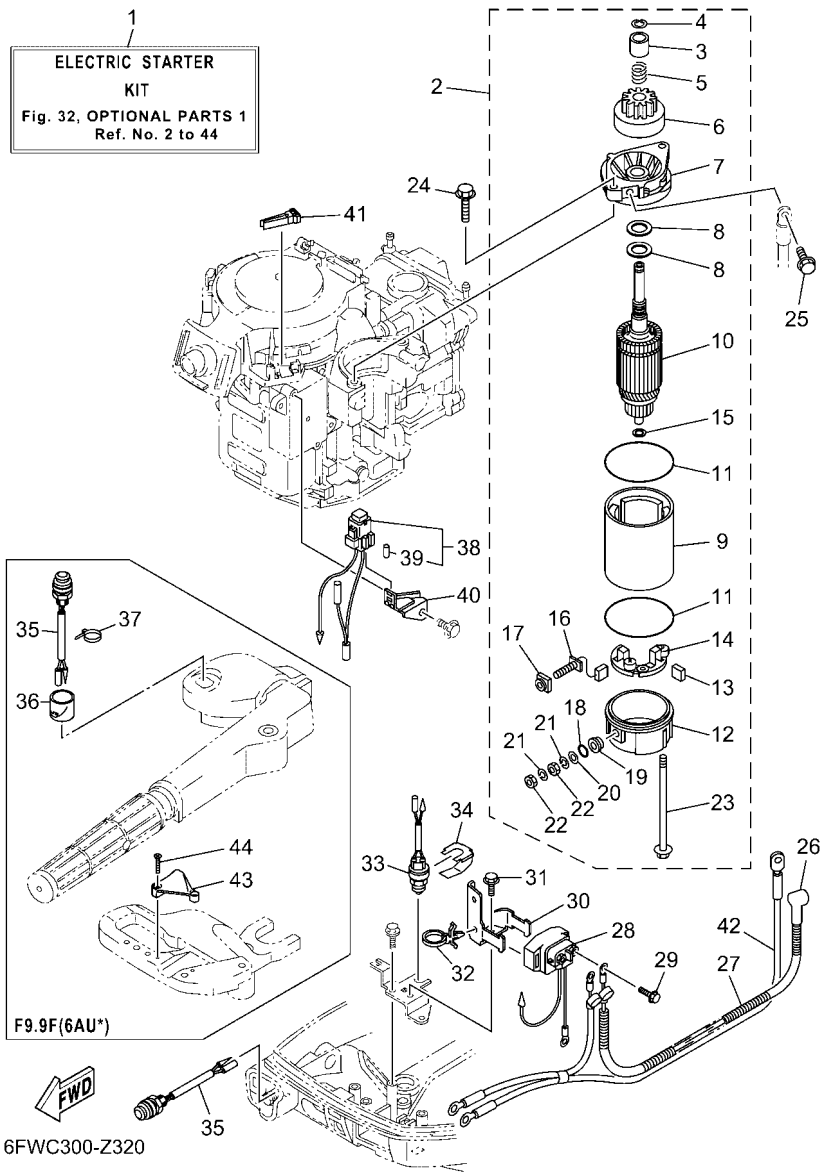

FIG. 32 OPTIONAL PARTS 1 — PIECES OPTIONNELLES 1

REF. NO.	PART NO. N° PIECES	DESCRIPTION DESCRIPTION	MH	E				REMARKS REMARQUES
28	68T–81940–00	STARTER RELAY ASSY LANCEUR RELAIS (ENS.)	1					
29	97E95–06610	BOLT, HEXAGON W/W DEEP RECESS VIS HEXAGONAL AVC RONDELLE	2					
30	68T–81945–01	PLATE, SWITCH FITTING PLAQUE, FIXATION DU RELAIS	1					
31	97E95–06512	BOLT, HEXAGON W/W DEEP RECESS VIS HEXAGONAL AVC RONDELLE	1					
32	90465–12M56	CLAMP BRIDE	1					
33	6F5–82540–01	NEUTRAL SWITCH ASSY CONTACTEUR DE POINT-MORT	1					
34	6DR–82555–00	DAMPER, MAIN SWITCH 1 AMORTISSEUR 1, CONTACT A CLEF	1					
35	68T–81870–00	STARTING SWITCH ASSY CONTACT A CLEF	1					
36	68T–81821–00	COVER, SWITCH COUVERCLE, COMMUTATEUR	1					
37	90465–11M10	CLAMP BRIDE	1					
38	68T–82150–00	FUSE HOLDER ASSY SUPPORT DE FUSIBLE	1					
39	66V–82151–00	.FUSE (10A-BL) .FUSIBLE (10A-BL)	2					
40	68T–82171–01	STAY, FUSE BOX SUPPORT, BOITE A FUSIBLES	1					
41	67F–2812A–00	PULLER, FUSE TENDEUR, FUSIBLE	1					
42	68T–82105–02	BATTERY CABLE (L: 2.1M) CABLE DE BATTERIE (L: 2.1M)	1					
43	68T–82594–00	CLAMP BRIDE	1					
44	90151–05003	SCREW, COUNTERSUNK VIS, TETE NOYEE	2					

FIG. 33 OPTIONAL PARTS 2 — PIECES OPTIONNELLES 2

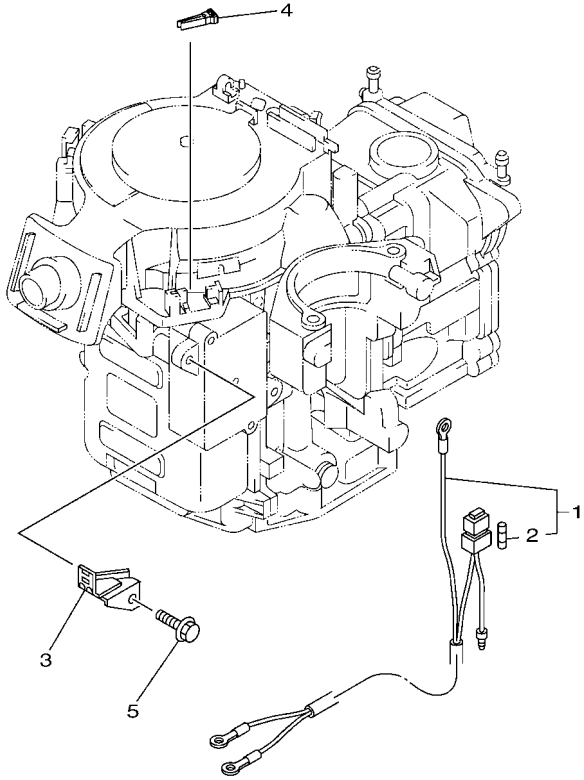

6EA510K-R330

REF. NO.	PART NO. N° PIECES	DESCRIPTION DESCRIPTION	MH	E				REMARKS REMARQUES
1	68T–81949–00	WIRE, LEAD FIL	1					
2	66V–82151–00	.FUSE (10A-BL) .FUSIBLE (10A-BL)	2					
3	68T–82171–01	STAY, FUSE BOX SUPPORT, BOITE A FUSIBLES	1					
4	67F–2812A–00	PULLER, FUSE TENDEUR, FUSIBLE	1					
5	97E95–06512	BOLT, HEXAGON W/W DEEP RECESS VIS HEXAGONAL AVC RONDELLE	1					

FIG. 34 OPTIONAL PARTS 3 — PIECES OPTIONNELLES 3

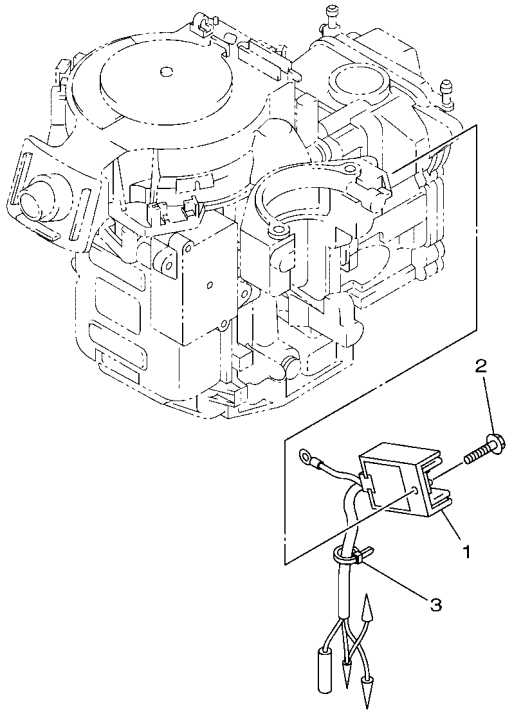

6EA5300-R390

REF. NO.	PART NO. N° PIECES	DESCRIPTION DESCRIPTION	MH	E				REMARKS REMARQUES
1	68T–81960–00	RECTIFIER & REGULATOR ASSY REDRESSEUR REGULATEUR CPLT	1					FOR REC/REG KIT FOR REC/REG KIT
2	97E95–06512	BOLT, HEXAGON W/W DEEP RECESS VIS HEXAGONAL AVC RONDELLE	1					FOR REC/REG KIT FOR REC/REG KIT
3	90465–11M10	CLAMP BRIDE	2					FOR REC/REG KIT FOR REC/REG KIT

FIG. 35 REPAIR KIT 1 — KITS DE REPARATION 1

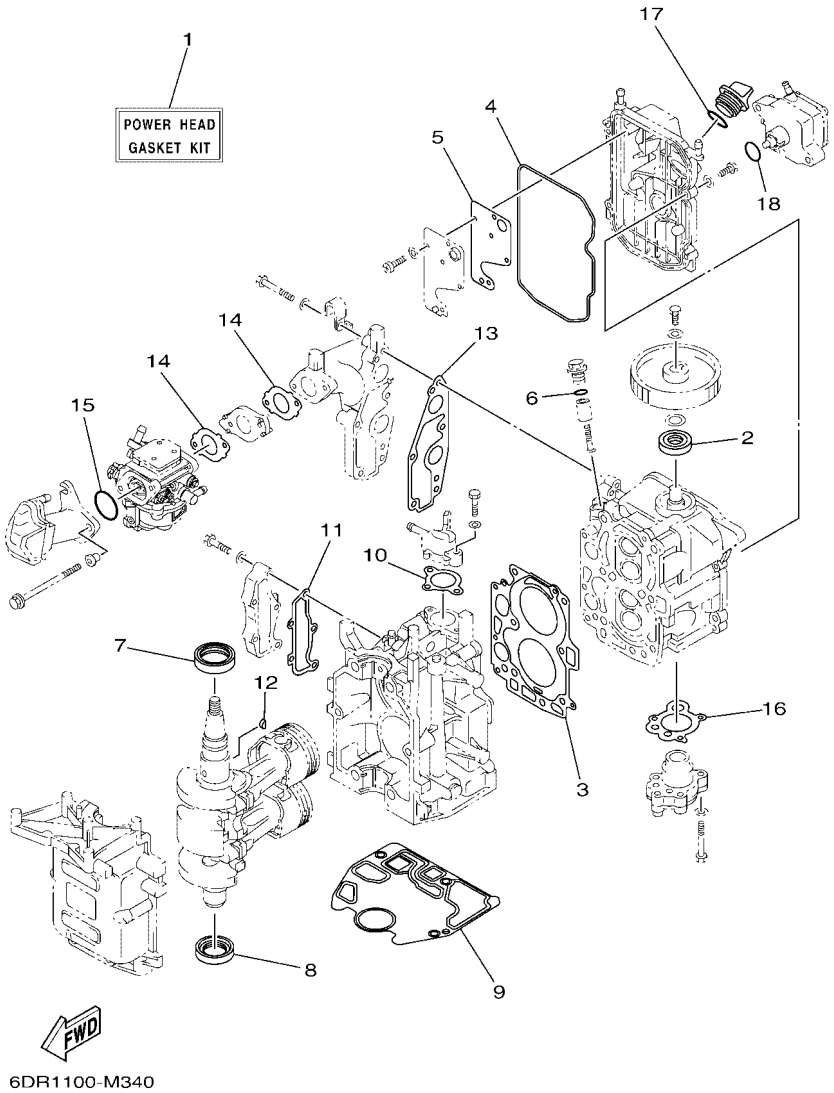

REF. NO.	PART NO. N° PIECES	DESCRIPTION DESCRIPTION	MH	E				REMARKS REMARQUES
1	6AU–W0001–00	POWER HEAD GASKET KIT POCHETTE DE JINTS TETE MOTRICE	1	1				
2	93102–18M21	.OIL SEAL .JOINT SPY	1	1				
3	68T–11181–00	.GASKET, CYLINDER HEAD 1 .JOINT, DE CULASSE 1	1	1				
4	68T–11356–00	.SEAL, CYLINDER 2 .JOINT, SPY CYLINDRE	1	1				
5	68T–11169–A0	.GASKET, BREATHER COVER .JOINT, COUVERCLE DE RENIFLARD	1	1				
6	93210–13M63	.O-RING .JOINT TORIQUE	1	1				
7	93102–30M22	.OIL SEAL .JOINT SPY	1	1				
8	93101–25M69	.OIL SEAL .JOINT SPY	1	1				
9	68T–11351–00	.GASKET, CYLINDER .JOINT, D'EMBASE	1	1				
10	6G8–12414–A0	.GASKET, COVER .JOINT, COUVERCLE	1	1				
11	68T–41114–A0	.GASKET, EXHAUST OUTER COVER .JOINT, COUVERCLE D'ECHAPPEMENT	1	1				
12	90280–03M01	.KEY, WOODRUFF .CLAVETTE, DEMI-LUNE	1	1				
13	68T–13645–00	.GASKET, MANIFOLD 1 .JOINT, TUBULURE 1	1	1				
14	68T–13646–A0	.GASKET, MANIFOLD 2 .JOINT, TUBULURE 2	2	2				
15	93210–31MJ5	.O-RING .JOINT TORIQUE	1	1				
16	68T–13329–00	.GASKET, PUMP COVER .JOINT, COUVERCLE DE POMPE	1	1				
17	93210–24M79	.O-RING .JOINT TORIQUE	1	1				
18	93210–20M65	.O-RING .JOINT TORIQUE	1	1				

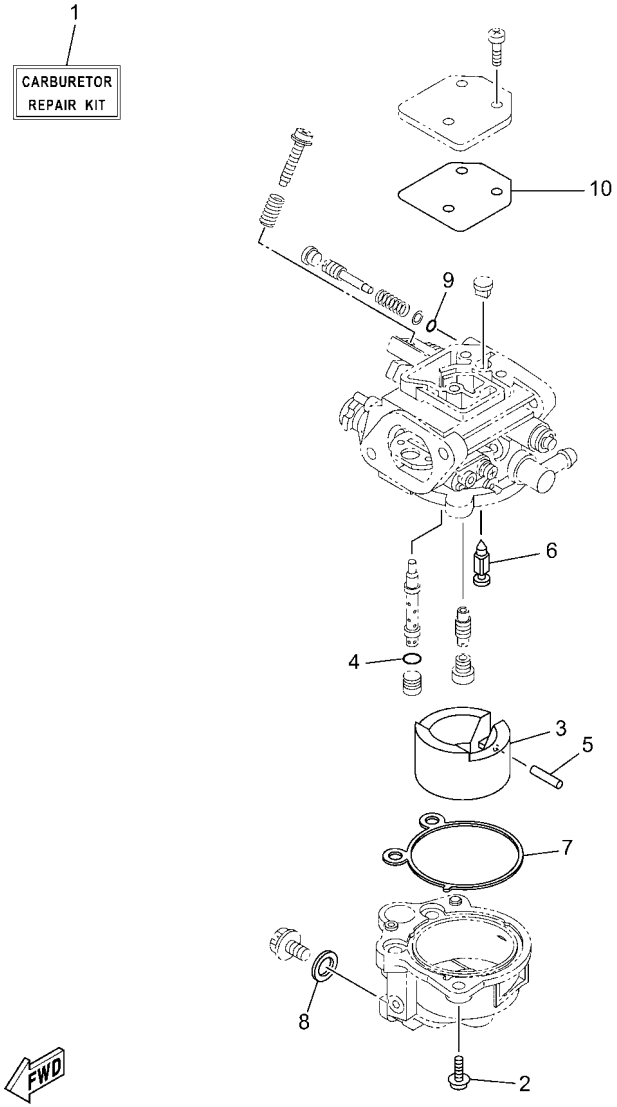

6FW8100-W300

FIG. 36 REPAIR KIT 2 — KITS DE REPARATION 2

REF. NO.	PART NO. N° PIECES	DESCRIPTION DESCRIPTION	MH	E				REMARKS REMARQUES
1	6DR–W0093–00	CARBURETOR REPAIR KIT KIT DE REPARATION CARBURATEUR	1	1				
2	62Y–14321–00	.SCREW, THROTTLE .VIS, ACCELERATEUR	2	2				
3	6DR–14385–00	.FLOAT .FLOTTEUR	1	1				
4	6DR–14561–00	.O-RING .JOINT TORIQUE	1	1				
5	4FP–14386–00	.PIN, FLOAT .AXE, FLOTTEUR	1	1				
6	6DR–14336–00	.NEEDLE .AIGUILLE	1	1				
7	6DR–14984–00	.GASKET, FLOAT CHAMBER .JOINT, CUVE DE FLOTTEUR	1	1				
8	652–14397–00	.O-RING .JOINT TORIQUE	1	1				
9	6DR–14397–00	.O-RING .JOINT TORIQUE	1	1				
10	6DR–14818–00	.COVER GASKET .JOINT DE COURERCLE	1	1				

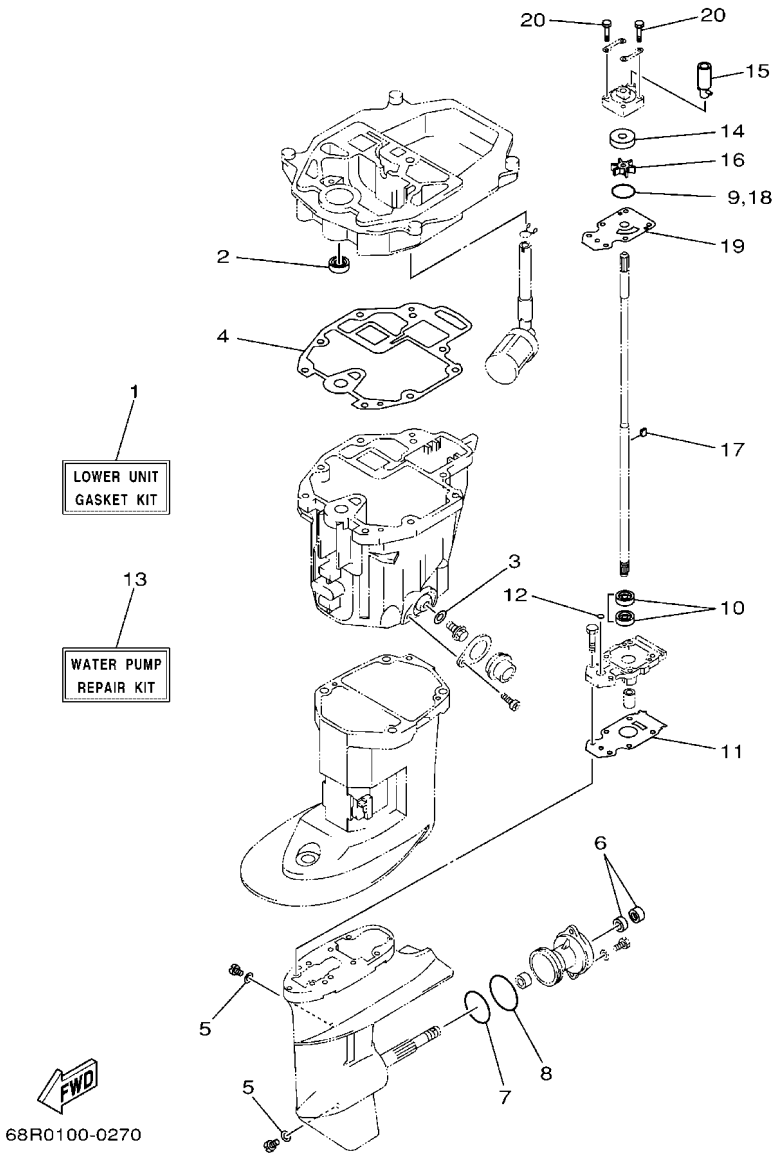

FIG. 37 REPAIR KIT 3 — KITS DE PEPARATION 3

REF. NO.	PART NO. N° PIECES	DESCRIPTION DESCRIPTION	MH	E				REMARKS REMARQUES
1	68T–W0001–20	LOWER UNIT GASKET KIT POCHETTE DE JOINTS EMBASE	1	1				
2	93101–12M70	.OIL SEAL .JOINT SPY	1	1				
3	90430–10M11	.GASKET .JOINT	1	1				
4	68T–13475–00	.GASKET .JOINT	1	1				
5	90430–08003	.GASKET .JOINT	2	2				
6	93101–15074	.OIL SEAL .JOINT SPY	2	2				
7	93210–49046	.O-RING .JOINT TORIQUE	1	1				
8	93210–53M08	.O-RING .JOINT TORIQUE	1	1				
9	93210–44398	.O-RING .JOINT TORIQUE	1	1				
10	93101–11M23	.OIL SEAL .JOINT SPY	2	2				
11	68T–45315–A0	.PACKING, LOWER CASING .JOINT, BOITIER D'HELICE	1	1				
12	93210–06ME6	.O-RING .JOINT TORIQUE	1	1				
13	68T–W0078–02	WATER PUMP REPAIR KIT KIT DE REPARATION DE LA POMPE	1	1				
14	63V–44322–00	.INSERT, CARTRIDGE .CUVETTE	1	1				
15	68T–44366–01	.DAMPER, WATER SEAL 2 .JOINT, TUBE D'EAU 2	1	1				
16	68T–44352–00	.IMPELLER .TURBINE	1	1				
17	664–44338–00	.KEY, WOODRUFF .CLAVETTE, VOLANT	1	1				
18	93210–44398	.O-RING .JOINT TORIQUE	1	1				
19	68T–44323–00	.OUTER PLATE, CARTRIDGE .PLAQUE EXTERIEURE	1	1				
20	97D95–08045	.BOLT, HEXAGON DEEP RECESS .VIS HEXAGONAL	4	4				

NUMERICAL INDEX
INDEX NUMERIQUE

PART NO. N° PIECES	REF. NO.
6AU–11111–00–1S	5 – 2
6AU–11133–10	5 – 3
68T–11168–00	5 – 13
68T–11169–A0	5 – 14
	35 – 5
68T–11181–00	5 – 4
	35 – 3
68T–11191–01–1S	5 – 9
6G8–11197–B0	5 – 18
6G8–11325–00	1 – 3
	5 – 16
68T–11351–00	3 – 5
	35 – 9
68T–11356–00	5 – 11
	35 – 4
6H1–11372–00	25 – 13
6AU–11411–00	4 – 1
68T–11416–01	4 – 2
68T–11416–11	4 – 2
68T–11416–21	4 – 2
68T–11536–00	9 – 7
66M–11537–01	9 – 2
68T–11557–00	9 – 8
6G8–11575–00	25 – 9
6G8–11587–01	9 – 9
68T–11603–01	4 – 6
68T–11604–01	4 – 6
68T–11605–01	4 – 6
6AU–11631–00–96	4 – 5
68T–11633–00	4 – 7
6AU–11635–00	4 – 5
6AU–11636–00	4 – 5
6AU–11650–00	4 – 3
67D–11654–00	4 – 4
6AU–12111–00	6 – 1
60R–12113–00	6 – 4
68T–12116–00	6 – 3
7NJ–12117–00	6 – 5
7NJ–12118–00	6 – 6
51Y–12119–00	6 – 7
6AU–12121–00	6 – 2
68T–12146–00	6 – 8
68T–12151–00	6 – 12
6G8–12158–00	6 – 14
6G8–12159–00	6 – 13
68T–12171–01	9 – 1
66M–12411–01	1 – 1
	3 – 6

PART NO. N° PIECES	REF. NO.
688–12412–00	3 – 7
68T–12413–00–1S	3 – 8
6G8–12414–A0	1 – 2
	3 – 9
	35 – 10
68T–12481–00	3 – 11
6E5–12481–00	16 – 28
	16 – 41
67F–12482–00	7 – 2
	7 – 25
68T–12482–00	3 – 16
68T–12483–00	7 – 14
68T–12535–20	16 – 36
	16 – 49
6DR–12572–00	16 – 34
	16 – 47
6R3–12581–10	16 – 33
	16 – 46
6R3–12582–00	16 – 31
	16 – 44
6R3–12583–10	16 – 32
	16 – 45
66M–13131–00	10 – 17
68T–13300–00	9 – 14
68T–13329–00	9 – 15
	35 – 16
68T–13421–01	25 – 7
6AU–13437–61	9 – 18
6FW–13448–00	19 – 26
	20 – 31
68T–13475–00	25 – 20
	37 – 4
68T–13641–01–1S	7 – 1
68T–13641–20–1S	7 – 1
	7 – 24
68T–13645–00	7 – 3
	35 – 13
68T–13646–A0	7 – 8
	35 – 14
6DR–14157–00	8 – 23
62Y–14212–00	8 – 3
68T–14271–00	7 – 9
6DR–14285–00	8 – 20
6FW–14301–21	8 – 1
6FW–14301–51	8 – 1
62Y–14321–00	8 – 5
	36 – 2
69W–14321–00	8 – 2

PART NO. N° PIECES	REF. NO.
6DR–14321–00	8 – 4
6DR–14323–10	8 – 18
6E7–14325–00	10 – 14
6DR–1432A–00	8 – 7
6DR–14334–00	8 – 19
6DR–14336–00	8 – 10
	36 – 6
6FW–14341–00	8 – 13
6FW–14342–21	8 – 12
6FW–14343–37	8 – 11
60S–14381–00	8 – 14
62Y–14383–30	8 – 16
6DR–14385–00	8 – 6
	36 – 3
4FP–14386–00	8 – 9
	36 – 5
652–14397–00	8 – 17
	36 – 8
6DR–14397–00	8 – 21
	36 – 9
6AU–14440–00	7 – 10
68T–14497–00	19 – 21
	20 – 26
6DR–14561–00	8 – 8
	36 – 4
6AU–14711–00–CA	24 – 2
6DR–14818–00	8 – 22
	36 – 10
6DR–14862–00	8 – 24
6DR–14984–00	8 – 15
	36 – 7
6AU–15100–00	3 – 2
68T–15311–01–CA	25 – 12
68T–15316–00	25 – 17
68T–15317–00	25 – 18
68T–15362–00	25 – 24
6G8–15363–00	5 – 20
63V–15705–01	11 – 8
68T–15710–14	11 – 1
68T–15711–03	11 – 2
63V–15713–00	11 – 6
63V–15714–00	11 – 4
68T–15716–00	11 – 7
66T–15731–00	11 – 21
66T–15734–00	11 – 19
63V–15741–00	11 – 5
63V–15744–00	11 – 11
6G1–15755–00	11 – 14

PART NO. N° PIECES	REF. NO.
68T–15762–00	11 – 23
68T–15764–00	11 – 13
63V–15767–01	11 – 9
68T–15770–00	11 – 20
68T–15774–20	19 – 27
	20 – 34
6G1–15779–00	11 – 16
68T–15784–00	11 – 10
6A0–15789–01	11 – 17
68T–15793–00	11 – 12
68T–15794–00	11 – 18
68T–15795–00	11 – 3
6YL–24201–07	28 – 1
68T–24251–01	1 – 5
	10 – 7
6YL–24260–10	28 – 3
6YL–24268–01	28 – 4
6G1–24304–11	10 – 1
6G1–24305–05	28 – 12
6Y1–24305–06	28 – 14
61J–24306–05	28 – 7
6YL–24306–54	28 – 7
6AU–24311–00	10 – 25
6YL–24329–00	28 – 5
61N–24329–01	10 – 2
650–24351–51	28 – 11
61J–24360–00	28 – 9
66M–24374–00	10 – 18
650–24378–00	5 – 10
	7 – 2
68T–24410–02	10 – 11
66M–24411–02	10 – 15
66M–24413–01	10 – 12
6A0–24421–01	10 – 13
66M–24423–00	10 – 16
66M–24444–00	10 – 21
66M–24454–00	10 – 19
66M–24471–02	10 – 20
6YK–24610–10	28 – 2
6DR–26301–00	17 – 16
6DR–26316–01	17 – 17
68T–26367–01	16 – 13
68T–28100–02	10 – 29
67F–2812A–00	14 – 23
	32 – 41
	33 – 4
6FW–28199–79–D0	10 – 30
6FW–28199–79–E0	10 – 30

PART NO. N° PIECES	REF. NO.
6FW–28199–79–F0	10 – 30
6FW–28199–79–G0	10 – 30
6FW–28199–79–H0	10 – 30
6FW–28199–79–S0	10 – 30
6FW–28199–89–K0	10 – 31
6FW–28199–89–L0	10 – 31
6FW–28199–89–M0	10 – 31
6FW–28199–89–N0	10 – 31
6FW–28199–89–P0	10 – 31
6FW–28199–89–R0	10 – 31
6AU–41113–00–1S	3 – 13
68T–41114–A0	3 – 14
	35 – 11
68T–41137–00–CA	25 – 1
6AU–41211–00	19 – 20
	20 – 25
68T–41237–00	14 – 15
68T–41256–00	7 – 20
6J8–41262–00	7 – 21
	19 – 25
	20 – 30
6H4–41271–02	7 – 18
689–41273–00	7 – 19
68T–41283–00	19 – 18
	20 – 23
68T–41638–00	19 – 17
	20 – 22
6G1–41662–01–94	19 – 3
	20 – 9
6DR–42101–00–8D	17 – 1
67D–42119–01	17 – 10
65W–42125–00	17 – 7
6DR–42126–00	17 – 6
6DR–42129–01	17 – 28
65W–42131–01	17 – 23
6FW–42137–00	17 – 11
6DR–42138–01	17 – 4
65W–42159–00	17 – 5
66R–42171–00	17 – 18
67D–42177–01	17 – 9
6AH–42508–03	18 – 1
6DR–42511–00–8D	23 – 1
6AU–42511–10–8D	23 – 1
6DR–42511–10–8D	23 – 1
68T–42525–01	18 – 2
6AH–42527–00	18 – 14
65W–42528–00	18 – 8
68T–42561–00	18 – 6

PART NO. N° PIECES	REF. NO.
67C–42562–A0	18 – 4
6FW–42610–02	2 – 1
6FW–42610–12	2 – 1
60R–42615–00	2 – 7
6DR–4261A–02	2 – 2
6DR–4261A–12	2 – 2
68T–42649–00	2 – 10
6DR–42649–01	2 – 5
6DR–42651–00	2 – 3
60R–42652–00	2 – 8
6BG–42662–01	2 – 6
60R–42675–01	2 – 13
60R–42676–11	2 – 14
60R–42678–11	2 – 12
	2 – 15
6AH–42697–10	2 – 11
6DR–42710–00–8D	16 – 1
68T–42716–10	16 – 5
65W–42717–00	16 – 17
	25 – 2
68T–42717–01	16 – 23
68T–42724–20	16 – 14
68T–42724–40	14 – 3
6DR–42725–01	16 – 12
68T–42725–11	21 – 16
6DR–42725–11	16 – 12
	21 – 15
68T–42726–01	19 – 1
6H4–42726–01	16 – 16
688–42726–11	16 – 16
	16 – 40
682–42727–01	16 – 9
68T–42741–00	16 – 18
6DR–42761–00	16 – 10
6DR–42761–10	16 – 10
	21 – 14
68T–42771–00	16 – 24
6EE–42794–41	16 – 38
6EE–42794–51	16 – 39
6AU–42801–00	16 – 6
6AH–43111–00–8D	22 – 1
6AH–43112–00–8D	22 – 2
66R–43113–00	22 – 9
648–43114–01	22 – 6
6E7–43116–00	22 – 5
6E0–43118–01	22 – 3
69A–43131–00	22 – 7
6E5–43145–01	29 – 8

PART NO. N° PIECES	REF. NO.
68T–43155–00	18 – 17
6L2–43160–01	22 – 15
63V–43191–00	22 – 26
6AH–43311–00–8D	22 – 17
6AU–43311–10–8D	22 – 17
6AH–43350–00	22 – 24
68T–43611–00	22 – 31
6AH–43614–00	22 – 28
6AH–43615–00	22 – 30
6DR–43616–00	22 – 19
6AH–43617–00	22 – 22
6AH–43627–00	22 – 36
6DR–43631–00	22 – 18
689–43633–01	18 – 7
6DR–43641–00	22 – 21
68T–43646–00	22 – 20
68T–43659–00	22 – 34
6DR–44111–00–8D	17 – 26
6AU–44111–10	20 – 5
	21 – 7
6DR–44113–A0	17 – 34
6DR–44114–00	17 – 44
65W–44116–00	19 – 7
	20 – 13
6DR–44116–00	17 – 35
6DR–44117–01	19 – 8
	20 – 14
66R–44118–00	17 – 36
68T–44121–03	19 – 2
	20 – 8
68T–44143–01	19 – 10
68T–44143–11	19 – 10
	20 – 16
61N–44146–00	19 – 12
	20 – 18
68T–44150–01	26 – 34
6DR–44173–00	17 – 27
703–44189–20	31 – 36
703–44189–30	31 – 43
703–44189–40	31 – 41
6X3–44191–00	31 – 48
63V–44301–00	26 – 18
63V–44322–00	26 – 19
	37 – 14
68T–44323–00	26 – 24
	37 – 19
63V–44328–01	26 – 27
664–44338–00	26 – 22

PART NO. N° PIECES	REF. NO.
664–44338–00	37 – 17
68T–44352–00	26 – 21
	37 – 16
68T–44361–00	27 – 1
68T–44361–10	27 – 1
63V–44365–11	27 – 2
68T–44366–01	26 – 20
	37 – 15
6BL–44391–00	16 – 8
68T–44517–00	23 – 8
68T–44526–00	23 – 9
6AU–44551–00–8D	23 – 12
682–44555–30	23 – 14
6AU–44557–01	23 – 13
6AU–45111–00–8D	24 – 1
6AU–45111–10–8D	24 – 1
68T–45181–00	25 – 3
6G1–45214–00	27 – 5
6G1–45215–00	27 – 6
68T–45251–00	1 – 7
	26 – 6
6AU–45300–05–8D	26 – 1
6AU–45300–15–8D	26 – 1
6AU–45311–01–8D	26 – 2
68T–45315–A0	26 – 31
	37 – 11
6G1–45316–09	26 – 29
6G1–45317–09	26 – 3
68T–45321–00	24 – 5
68T–45331–01–CA	26 – 28
6G1–45361–01–8D	26 – 11
6G1–45362–09	26 – 12
63V–45375–00	27 – 9
6AU–45511–00	26 – 35
6AU–45511–10	26 – 35
6G1–45533–00	26 – 39
6G1–45533–10	26 – 39
6G1–45533–20	26 – 39
6G1–45533–30	26 – 39
68T–45551–00	26 – 38
68T–45560–00	26 – 40
647–45567–00	26 – 44
68T–45571–00	26 – 42
664–45587–01	26 – 41
664–45587–10	26 – 41
664–45587–20	26 – 41
664–45587–30	26 – 41
664–45587–40	26 – 41

PART NO. N° PIECES	REF. NO.
664–45587–50	26 – 41
664–45587–60	26 – 41
68T–45611–00	26 – 50
6G1–45616–01	27 – 16
68T–45631–00	26 – 45
6G1–45632–00	26 – 46
654–45633–00	26 – 47
6G1–45635–00	26 – 49
6G1–45941–00	27 – 14
6G1–45943–00	27 – 14
6G1–45947–00	27 – 14
6G1–45952–00	27 – 14
6G1–45954–00	27 – 14
6G1–45987–02	27 – 10
68T–46241–00	9 – 6
6AU–46297–00	9 – 12
703–48128–10	31 – 39
703–48129–00	31 – 42
703–48152–10	31 – 6
703–48153–00	31 – 61
703–48189–00	31 – 19
703–48198–00	31 – 16
703–48201–24	30 – 1
	31 – 1
703–48211–10	31 – 25
703–48212–10	31 – 26
703–48213–10	31 – 27
703–48215–11	31 – 47
703–48219–10	31 – 34
703–48221–10	31 – 28
703–48222–30	31 – 31
703–48223–10	31 – 32
703–48225–10	31 – 33
703–48227–00	31 – 30
703–48232–00	31 – 2
703–48234–00	31 – 20
703–48235–00	31 – 5
703–48236–00	31 – 18
703–48238–00	31 – 24
703–48243–00	31 – 17
703–48244–00	31 – 23
703–48245–00	31 – 13
703–48246–00	31 – 29
701–48248–00	31 – 15
703–48252–00	31 – 14
703–48261–01	31 – 4
703–48264–00	31 – 8
703–48265–10	31 – 11

PART NO. N° PIECES	REF. NO.
703–48268–00	31 – 7
703–48271–00	31 – 3
703–48281–00	31 – 35
703–48284–00	31 – 58
701–48287–00	31 – 46
703–48293–11	31 – 45
701–48310–80	30 – 2
701–48310–90	30 – 2
701–48320–00	30 – 2
6DR–48321–00	17 – 39
6FM–48344–00	20 – 20
	20 – 32
	21 – 10
	21 – 12
66R–48344–01	17 – 45
703–48345–01	31 – 21
703–48358–01	31 – 22
6DR–48501–03	21 – 1
63V–48511–01	21 – 17
	23 – 20
68T–48531–01	21 – 2
6DR–48531–01	20 – 1
63D–48538–00	17 – 38
	19 – 16
66R–48538–00	17 – 37
68T–48538–00	19 – 14
682–48538–50	20 – 2
	21 – 3
68T–61350–10	29 – 1
6E5–61355–00	29 – 6
6AV–81337–00	12 – 13
68T–81800–10	15 – 4
	32 – 2
689–81807–20	15 – 8
	32 – 6
689–81810–20	15 – 11
	32 – 9
689–81811–20	15 – 18
	32 – 16
689–81812–20	15 – 15
	32 – 13
689–81820–20	15 – 14
	32 – 12
68T–81821–00	32 – 36
68T–81822–01	15 – 1
689–81824–00	15 – 17
	32 – 15
689–81826–20	15 – 25

PART NO. N° PIECES	REF. NO.
689–81826–20	32 – 23
689–8182A–00	15 – 24
	32 – 22
689–8182E–00	15 – 22
	32 – 20
689–8182F–00	15 – 23
	32 – 21
689–8182G–00	15 – 21
	32 – 19
689–8182H–00	15 – 19
	32 – 17
689–8182L–00	15 – 20
	32 – 18
68T–81830–00	15 – 9
	32 – 7
689–81835–00	15 – 10
	32 – 8
689–81840–20	15 – 16
	32 – 14
689–81847–20	15 – 13
	32 – 11
689–81850–20	15 – 12
	32 – 10
689–81858–00	15 – 7
	32 – 5
68T–81859–00	15 – 5
	32 – 3
68T–81870–00	32 – 35
689–81884–00	15 – 6
	32 – 4
68T–81940–00	14 – 6
	32 – 28
68T–81945–01	14 – 8
	32 – 30
68T–81949–00	33 – 1
68T–81960–00	13 – 10
	34 – 1
6EE–81994–41	11 – 27
	12 – 18
6EE–81994–51	11 – 28
	12 – 19
6EE–81995–41	11 – 24
	12 – 15
6EE–81995–51	11 – 25
	12 – 16
6AG–81996–01	12 – 20
68T–82105–02	32 – 42
69G–82105–02	14 – 2

PART NO. N° PIECES	REF. NO.
6G8–82117–01	14 – 4
	32 – 26
68T–82127–00	23 – 19
68T–82127–11	13 – 13
68T–82150–00	14 – 20
	32 – 38
66V–82151–00	14 – 21
	32 – 39
	33 – 2
68T–82171–01	14 – 22
	32 – 40
	33 – 3
6E3–82370–21	13 – 9
67F–82504–00	13 – 12
703–82510–45	31 – 49
68T–82522–00	13 – 2
703–82531–00	31 – 52
6K1–82532–00	31 – 51
703–82540–00	31 – 56
6F5–82540–01	32 – 33
6DR–82555–00	32 – 34
682–82556–00	17 – 50
	31 – 54
65W–82575–01	17 – 49
688–82575–02	31 – 53
703–82577–00	31 – 50
689–8257Y–00	17 – 51
69G–82580–02	14 – 1
688–8258A–20	31 – 55
703–82591–00	31 – 59
703–82592–00	31 – 60
68T–82594–00	32 – 43
6DR–82594–00	17 – 41
703–83383–11	31 – 57
65W–84342–00	16 – 26
68T–85410–10	13 – 15
68T–85520–00	12 – 2
68T–85533–10	12 – 4
68T–85540–00	13 – 1
6DR–85550–10	12 – 1
680–85570–02	13 – 6
68T–85580–01	12 – 3
6H2–85582–00	12 – 5
68T–85711–60	11 – 26
	12 – 17
68T–86111–00	14 – 14
68T–86112–00	14 – 11
68T–86117–00	14 – 18

NUMERICAL INDEX
INDEX NUMERIQUE

PART NO. N° PIECES	REF. NO.
6AU–W0001–00	35 – 1
68T–W0001–20	37 – 1
68T–W0078–02	1 – 9
	37 – 13
6DR–W0093–00	36 – 1
6AU–W009A–02–1S	5 – 1
6AU–W009B–00–1S	3 – 1
6G1–W4591–01	27 – 15
6G1–W4592–00	27 – 15
6MC–W8180–02	32 – 1
90101–06M18	22 – 12
90105–06188	7 – 13
90105–06M14	9 – 3
90105–08M36	5 – 6
90105–08M78	5 – 7
90109–06M80	17 – 3
90109–06M81	19 – 4
	20 – 10
90109–06M84	22 – 37
90109–06M86	16 – 11
	17 – 2
	19 – 9
	19 – 28
	20 – 15
	20 – 35
90116–08M54	23 – 7
90119–05018	18 – 3
90119–06012	23 – 15
90119–06049	5 – 8
90119–06198	23 – 16
90119–06291	16 – 2
90119–06MA2	3 – 10
90119–06MA3	3 – 15
	7 – 5
	13 – 8
90119–06MA5	7 – 4
90119–08020	15 – 3
90119–08046	15 – 2
90119–08201	25 – 22
90119–08M29	3 – 4
90119–08M76	15 – 26
	32 – 24
90151–05003	17 – 42
	32 – 44
90152–05011	17 – 12
90152–05M03	27 – 7
90157–05M16	28 – 6
90167–06002	16 – 35

PART NO. N° PIECES	REF. NO.
90167–06002	16 – 48
90170–05M38	17 – 47
90170–09M03	29 – 4
90170–12066	12 – 11
90170–24M09	9 – 10
90171–10M01	27 – 12
90179–06M28	23 – 17
90185–05002	27 – 8
90185–08057	21 – 19
	23 – 22
90185–09M01	29 – 3
90185–10M14	18 – 13
90185–22043	22 – 10
90201–06117	17 – 46
90201–06M94	9 – 5
90201–08065	18 – 16
90201–10081	29 – 7
90201–106M5	18 – 18
90201–10M01	27 – 11
90201–10M02	17 – 13
	27 – 17
90201–10M20	29 – 2
90201–12472	12 – 12
90201–13201	9 – 4
90201–15M89	26 – 43
90201–43M00	17 – 19
90202–10M56	18 – 5
90202–26M59	17 – 33
90202–43M57	17 – 21
90206–10M24	22 – 38
90206–26M25	17 – 32
90206–43M22	17 – 20
90209–10M26	18 – 12
90209–40008	23 – 3
90243–04M01	22 – 4
90266–04005	2 – 4
90280–03M01	9 – 11
	35 – 12
90280–04M06	12 – 10
90338–06M20	16 – 25
90340–08002	26 – 9
90340–10M10	25 – 15
90386–08032	17 – 15
90386–22MA4	22 – 8
90386–26MA3	17 – 31
90386–30048	23 – 4
90386–30M60	23 – 6
90386–40001	23 – 2

PART NO. N° PIECES	REF. NO.
90386–40M99	17 – 22
90387–05053	18 – 9
90387–05054	18 – 10
90387–06138	22 – 32
90387–06176	16 – 4
90387–06369	22 – 11
90387–06M59	19 – 19
	20 – 24
90387–06M70	7 – 12
90387–10M42	29 – 5
90387–13M56	6 – 9
90387–14M03	6 – 10
90387–14M49	26 – 4
90430–08003	1 – 8
	26 – 10
	37 – 5
90430–08143	25 – 5
90430–10M11	1 – 6
	25 – 16
	37 – 3
90445–09074	7 – 7
90445–09M20	7 – 7
	7 – 26
90445–10046	10 – 4
90445–10M50	10 – 8
90445–11M57	28 – 10
90445–11M58	28 – 8
90445–16010	10 – 10
90446–10M86	14 – 5
	32 – 27
90447–13014	10 – 27
90447–13015	17 – 40
90447–13M00	16 – 30
	16 – 43
90464–10M53	10 – 28
90464–10M60	19 – 5
	20 – 11
90465–08M83	7 – 16
	7 – 27
90465–08M99	7 – 15
	15 – 29
90465–11M10	3 – 12
	3 – 18
	7 – 23
	10 – 5
	12 – 9
	13 – 14
	15 – 28

PART NO. N° PIECES	REF. NO.
90465–11M10	16 – 29
	16 – 42
	32 – 37
	34 – 3
90465–12M56	14 – 10
	32 – 32
90467–08M18	7 – 22
90467–09M05	26 – 36
90467–09M09	10 – 6
	10 – 9
	10 – 26
90467–10M04	3 – 17
90467–11M08	25 – 8
90468–18001	19 – 11
	20 – 17
90468–18008	20 – 21
	20 – 33
	21 – 11
	21 – 13
90480–06M19	16 – 15
	16 – 27
90480–10627	9 – 13
90480–10M28	25 – 14
90480–13018	14 – 12
90480–14M54	24 – 4
90480–21M82	16 – 3
90480–25003	13 – 7
90501–12M40	6 – 11
90501–140A1	26 – 48
90501–23215	17 – 14
90502–10M07	22 – 16
90506–18014	22 – 25
90506–20020	22 – 29
90506–20025	22 – 25
90506–23016	22 – 29
91490–16010	17 – 8
91490–20012	17 – 48
91490–30025	27 – 13
91690–30010	14 – 16
91690–30012	20 – 3
	21 – 4
91690–30014	19 – 6
	20 – 12
91690–50014	7 – 6
92990–06200	19 – 22
	20 – 27
92990–06300	26 – 8
92990–08600	31 – 38

PART NO. N° PIECES	REF. NO.
92995–06100	16 – 20
92995–06600	16 – 21
	22 – 13
93101–11M23	26 – 30
	37 – 10
93101–12M70	25 – 6
	37 – 2
93101–15074	26 – 14
	37 – 6
93101–25M69	4 – 10
	35 – 8
93102–18M21	9 – 17
	35 – 2
93102–30M22	4 – 9
	35 – 7
93210–03261	14 – 19
93210–06ME6	26 – 32
	37 – 12
93210–08287	28 – 13
	28 – 15
93210–12327	20 – 6
	21 – 8
93210–12M62	25 – 10
93210–13M63	5 – 19
	35 – 6
93210–16275	29 – 9
93210–20M65	10 – 24
	35 – 18
93210–24M79	5 – 21
	35 – 17
93210–29M94	23 – 5
93210–31MJ5	7 – 11
	35 – 15
93210–44398	26 – 23
	37 – 9
	37 – 18
93210–49046	26 – 15
	37 – 7
93210–53M08	26 – 16
	37 – 8
93306–004U0	26 – 5
	26 – 13
93430–04M03	22 – 33
93430–06024	31 – 12
93450–15023	4 – 8
93604–12M07	24 – 8
	25 – 21
	26 – 25

PART NO. N° PIECES	REF. NO.
93604–12M07	27 – 3
93606–19M23	25 – 11
93700–06004	23 – 18
94702–00274	1 – 4
	5 – 22
95380–04600	10 – 22
95380–05600	31 – 9
95380–06600	16 – 22
	21 – 6
	31 – 44
95380–06700	19 – 13
	20 – 19
	22 – 14
95380–08600	23 – 10
95380–10700	17 – 25
95780–10300	17 – 24
95D95–06016	26 – 7
97080–08025	26 – 33
97095–05010	12 – 7
97380–05025	31 – 10
97380–08030	31 – 37
97513–06530	12 – 6
	12 – 8
97595–05514	2 – 9
97595–05516	20 – 7
	21 – 9
97595–05520	18 – 11
97607–04210	5 – 15
97780–40512	13 – 3
97780–60920	17 – 29
97885–05008	24 – 7
	25 – 19
97885–06030	16 – 19
97980–04208	14 – 17
97D95–06008	24 – 6
97D95–08014	25 – 4
97D95–08016	18 – 15
97D95–08045	26 – 26
	37 – 20
97E75–06514	24 – 3
97E75–06525	23 – 11
97E95–06510	7 – 17
	7 – 28
97E95–06512	13 – 5
	13 – 11
	14 – 9
	14 – 13
	15 – 30

PART NO. N° PIECES	REF. NO.
97E95–06512	16 – 7
	16 – 37
	16 – 50
	19 – 15
	19 – 24
	20 – 4
	20 – 29
	21 – 5
	32 – 31
	33 – 5
	34 – 2
97E95–06516	26 – 17
97E95–06520	5 – 12
	11 – 22
	12 – 14
	13 – 4
97E95–06525	10 – 3
97E95–06530	9 – 16
97E95–06545	19 – 23
	20 – 28
97E95–06610	14 – 7
	32 – 29
97E95–06630	10 – 23
97E95–08516	15 – 27
	32 – 25
97E95–08530	25 – 23
97E95–08535	17 – 30
	21 – 18
	23 – 21
	24 – 9
	27 – 4
98580–04006	31 – 40
98980–05025	5 – 17
99001–07600	26 – 37
99080–04600	17 – 43
99080–05600	22 – 23
	22 – 27
	22 – 35
99530–10114	5 – 5
99530–12016	3 – 3