YAMAHA

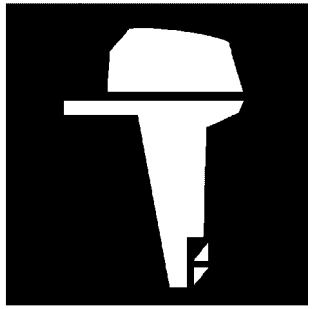

# PARTS CATALOGUE
# CATALOGUE DE PIECES DETACHEES

# T60C-2026 ( 6C6P )

316C6-300F1

( )

YAMAHA GENUINE Parts & Accessories

T60C
PARTS CATALOGUE
©2026 by Yamaha Motor Co., Ltd.
1st edition, May 2026
All rights reserved.
Any reprinting or unauthorized use
without the written permission of
Yamaha Motor Co., Ltd.
is expressly prohibited.
Printed in Japan.

T60C
CATALOGUE DE PIECES DETACHEES
©2026 par Yamaha Motor Co., Ltd.
1re édition, mai 2026
Tous droits réservés
Toute réimpression ou utilisation
non autorisée sans la permission écrite
de Yamaha Motor Co., Ltd.
est formellement interdite.
Imprimé au Japon

# FOREWORD

This Parts Catalogue is related to the parts for the model(s) on the cover page. When you are ordering replacement parts, please refer to this Parts Catalogue and quote both part numbers and part names correctly.

1. Modifications or additions which have been made after the issue of the Parts Catalogue will be announced in the Parts News.
   It is advisable that you make the necessary corrections to the Parts Catalogue according to the Parts News.

2. Abbreviations
   The following abbreviations are used in this Parts Catalogue.
   "UR" Use specified parts number.
   "UN" Use as many as needed.
   "AP" Alternate Parts
   "LM" Locally Made (Parts need to be ordered locally)
   "F#" Frame No. (Applicable machine No.)
   "O/S" Over Size

3. The number of components for assembly
   - Parts, which are to be supplied in an assembly, are listed with a dot (.) in front of the part name as shown below.
   - The numeral appearing to the right of each component part indicates the quantity of parts for each assembly unit.

| PART NO. | DESCRIPTION | Q'TY | REMARKS |
|---|---|---|---|
| 2F5–83310–60 | FRONT FLASHER LIGHT ASSY | 2 | |
| 115–83311–60 | .BULB (6V–18W) | 1 | |

4. Applicable colours of graphics are represented in the "REMARKS" as shown below.

| PART NO. | DESCRIPTION | Q'TY | REMARKS |
|---|---|---|---|
| 2N4–24110–00–X5 | FUEL TANK COMP. | 2 | MXR |
| 3J1–24240–10 | .GRAPHIC, FUEL TANK | 1 | FOR MXR |

5. Note that the illustrations for reference in finding parts numbers are not to be used for assembling. When assembling, please use the applicable service manual.

6. The asterisk (*) before a reference number indicates modified items after the first edition.

7. Applicable Serial No.
   Engine Serial No.

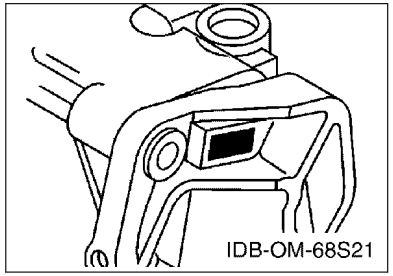


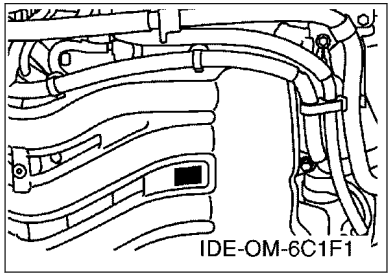


8. Applicable Engine Starting Serial No.

| Model | Serial No. | Model | Serial No. |
|---|---|---|---|
| T60C | 6C6-1053129 | | |
| | | | |
| | | | |
| | | | |
| | | | |

9. Applicable Colour Code

| Abbreviation | Colour Name | Colour Code |
|---|---|---|
| DBN1 | DARK BLUISH GRAY 1 | 008D |

10. Quantity Column Information

| Column No. | Name Of Q'ty Column | Applicable Model |
|---|---|---|
| 1 | 6C6P | T60C |
| | | |
| | | |
| | | |
| | | |

# AVANT–PROPOS

Ce catalogue de pièces détachées concerne les pièces pour le(s) modèle(s) indiqué(s) sur la page de couverture. Lorsque vous commandez des pièces de rechange, veuillez vous référer à ce catalogue de pieces détachées et indiquer clairement les numéros et les noms des pièces détachées.

1. Les modifications ou ajouts ayant été effectués après la parution du catalogue de pièces détachées seront décrits dans les Bulletins d'information concernant les pièces détachées.
   Il est recommandé que vous apportiez les corrections nécessaires au catalogue des pièces détachées en vous référant aux Bulletins d'information.

2. Abréviations
   Dans ce catalogue, les abréviations suivantes sont utilisées:
   "UR" Utiliser le numéro de pièces spécifié.
   "UN" Utiliser autant que nécessaire.
   "AP" Pièces de substitution
   "LM" Fabrication locale (les pièces doivent être commandées localement.)
   "F#" N° de cadre (applicable au N° de série)
   "O/S" Surdimensionné

3. Nombre de pièces d'un assemblage
   - Les pièces fournies comme composants d'un assemblage sont précédées d'un point (.) de la manière indiquée ci–dessous.
   - Le chiffre apparaissant à la droite de chaque composant indique la quantité de pièces pour chaque unité d'assemblage.

| N° PIECES | DESCRIPTION | QTE | REMARQUES |
|---|---|---|---|
| 2F5–83310–60 | ENS. CLIGNOTANT AVANT | 2 | |
| 115–83311–60 | .AMPOULE (6V–18W) | 1 | |

4. Les couleurs concernant les graphiques sont indiquées dans la colonne "REMARQUES", comme indiqué ci–dessous.

| N° PIECES | DESCRIPTION | QTE | REMARQUES |
|---|---|---|---|
| 2N4–24110–00–X5 | RESERVOIR A ESSENCE. | 2 | MXR |
| 3J1–24240–10 | .GRAPHIQUE | 1 | POUR MXR |

5. Veuillez noter que les illustrations sont indiquées à titre de référence pour trouver les numéros de pièces, non pour être utilisées lors de l'assemblage. Lors de l'assemblage, veuillez utiliser le manuel d'entretien adéquat.

6. L'astérisque (*) placé devant un numéro de référence indique des éléments qui ont été modifiés après la première édition.

7. N° de série applicable
   N° de Série du moteur

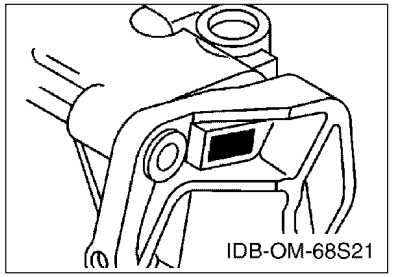


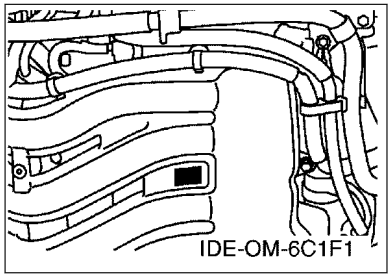


8. N° de série initial du moteur applicable

| Modèle | N° de série | Modèle | N° de série |
|---|---|---|---|
| T60C | 6C6-1053129 | | |
| | | | |
| | | | |
| | | | |
| | | | |

9. Code couleur applicable

| Abréviation | Nom de la couleur | Code couleur |
|---|---|---|
| DBN1 | DARK BLUISH GRAY 1 | 008D |

10. Informations relatives à la colonne Quantité

| N° de la colonne | Nom de la colonne Qté | Modèle applicable |
|---|---|---|
| 1 | 6C6P | T60C |
| | | |
| | | |
| | | |
| | | |

# CONTENTS

SCHEDULED SERVICE PARTS.....1
TOP COWLING.....2
CYLINDER & CRANKCASE 1.....3
CRANKSHAFT & PISTON.....5
CYLINDER & CRANKCASE 2.....6
VALVE.....8
INTAKE 1.....9
INTAKE 2.....10
INTAKE 3.....11
FUEL INJECTION PUMP 1.....12
FUEL INJECTION PUMP 2.....14
OIL PUMP.....15
FUEL.....16
GENERATOR.....18
ELECTRICAL 1.....19
ELECTRICAL 2.....20
ELECTRICAL 3.....22
ELECTRICAL 4.....24
STARTING MOTOR.....25
BOTTOM COWLING 1.....26
BOTTOM COWLING 2.....28
CONTROL.....29
BRACKET 1.....31
BRACKET 2.....33
POWER TRIM & TILT ASSY 1.....35
POWER TRIM & TILT ASSY 2.....38
UPPER CASING.....39
OIL PAN.....41
LOWER CASING & DRIVE 1.....42
LOWER CASING & DRIVE 2.....45
FUEL TANK.....48
STEERING GUIDE.....49
OPTIONAL PARTS 1.....50
OPTIONAL PARTS 2.....51
REPAIR KIT 1.....52
REPAIR KIT 2.....53

## INDEX

NUMERICAL INDEX.....55

# TABLE DES MATIERES

PIECES MAINTENANCE PERIODIQUE.....1
CAPOT SUPERIEUR..... 2
CYLINDRE & CARTER 1..... 3
VILEBREQUIN & PISTON.....5
CYLINDRE & CARTER 2..... 6
SOUPAPE..... 8
ADMISSION 1.....9
ADMISSION 2.....10
ADMISSION 3.....11
POMPE A INJECTEUR 1..... 12
POMPE A INJECTEUR 2..... 14
POMPE A HUILE.....15
CARBURANT..... 16
GENERATRICE.....18
PARTIE ELECTRIQUE 1.....19
PARTIE ELECTRIQUE 2.....20
PARTIE ELECTRIQUE 3.....22
PARTIE ELECTRIQUE 4.....24
DEMARREUR ELECTRIQUE.....25
CAPOT INFERIEUR 1.....26
CAPOT INFERIEUR 2.....28
COMMANDE..... 29
SUPPORT 1..... 31
SUPPORT 2..... 33
PUISSANCE PARER ET INCLINER 1..... 35
PUISSANCE PARER ET INCLINER 2..... 38
FOURREAU.....39
VENTILATEUR D'HUILE..... 41
BOITIER D'HELICE TRANSMISSION1.....42
BOITIER D'HELICE TRANSMISSION2.....45
RESERVOIR A CARBURANT.....48
FIXATION DE DIRECTION..... 49
PIECES OPTIONNELLES 1.....50
PIECES OPTIONNELLES 2.....51
KITS DE REPARATION 1..... 52
KITS DE REPARATION 2..... 53

## INDEX

INDEX NUMERIQUE.....55

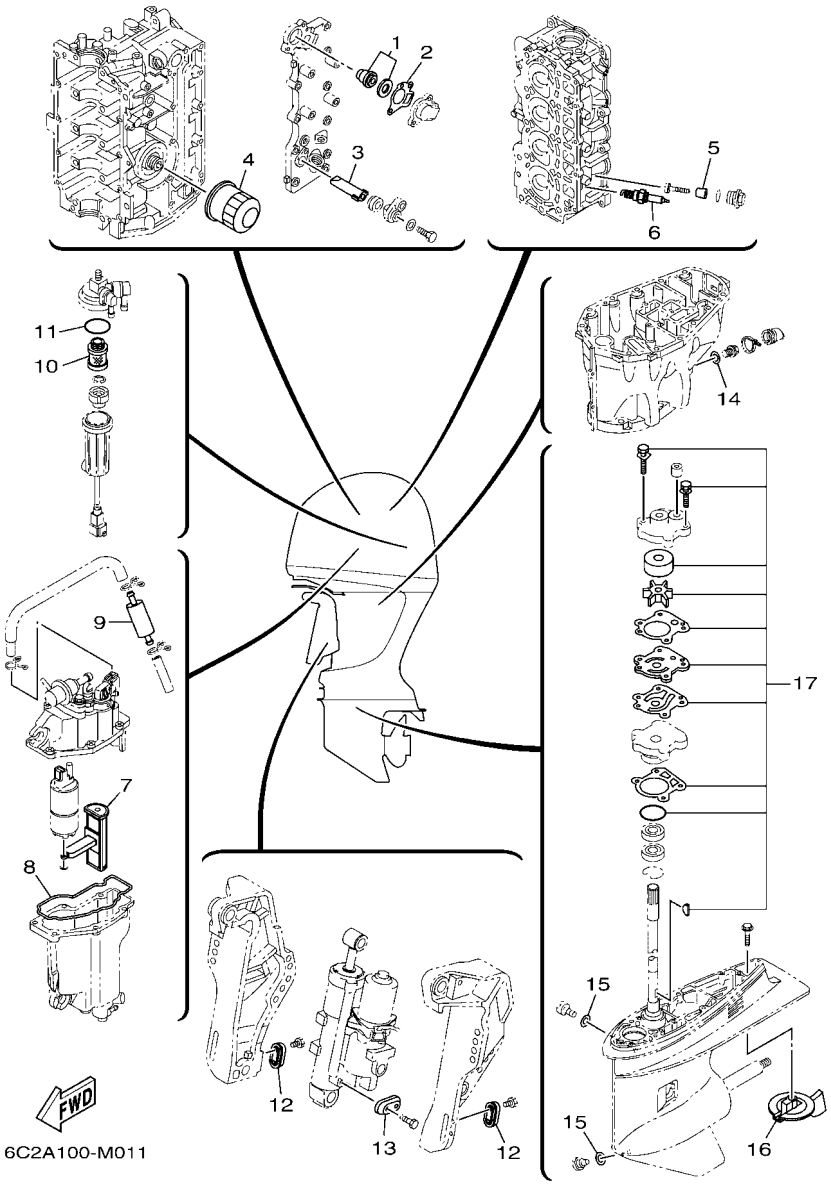


## FIG. 1 SCHEDULED SERVICE PARTS — PIECES MAINTENANCE PERIODIQUE

| REF. NO. | PART NO. N° PIECES | DESCRIPTION DESCRIPTION | 6C8P | | | | | REMARKS REMARQUES |
|---|---|---|---|---|---|---|---|---|
| 1 | 6G8–12411–03 | THERMOSTAT<br>THERMOSTAT | 1 | | | | | |
| 2 | 62Y–12414–01 | GASKET, COVER<br>JOINT, COUVERCLE | 1 | | | | | |
| 3 | 62Y–11325–00 | ANODE<br>ANODE | 1 | | | | | |
| 4 | 5GH–13440–90 | ELEMENT ASSY, OIL CLEANER<br>ELEMENT, FILTRE A HUILE | 1 | | | | | |
| 5 | 6G8–11325–00 | ANODE<br>ANODE | 4 | | | | | |
| 6 | 94702–00418 | PLUG, SPARK (NGK DPR6EB-9)<br>BOUGIE D,ALLUMAGE (NGK DPR6EB- | 4 | | | | | |
| 7 | 6C5–13915–01 | FILTER<br>FILTRE | 1 | | | | | |
| 8 | 6C5–14984–10 | GASKET, FLOAT CHAMBER<br>JOINT, CUVE DE FLOTTEUR | 1 | | | | | |
| 9 | 6C5–24251–01 | STRAINER 1<br>FILTRE 1 | 1 | | | | | |
| 10 | 6D8–24563–00 | ELEMENT, FILTER<br>ELEMENT, FILTRE | 1 | | | | | |
| 11 | 6D8–24564–00 | GASKET<br>JOINT | 1 | | | | | |
| 12 | 65W–45251–00 | ANODE<br>ANODE | 2 | | | | | |
| 13 | 65W–45251–00 | ANODE<br>ANODE | 1 | | | | | |
| 14 | 90430–14M09 | GASKET<br>JOINT | 1 | | | | | |
| 15 | 90430–08003 | GASKET<br>JOINT | 2 | | | | | |
| 16 | 67F–45371–00 | TAB-TRIM<br>ANODE DERIVE | 1 | | | | | |
| 17 | 6H3–W0078–02 | WATER PUMP REPAIR KIT<br>KIT DE REPARATION DE LA POMPE | 1 | | | | | |

## FIG. 2 TOP COWLING — CAPOT SUPERIEUR

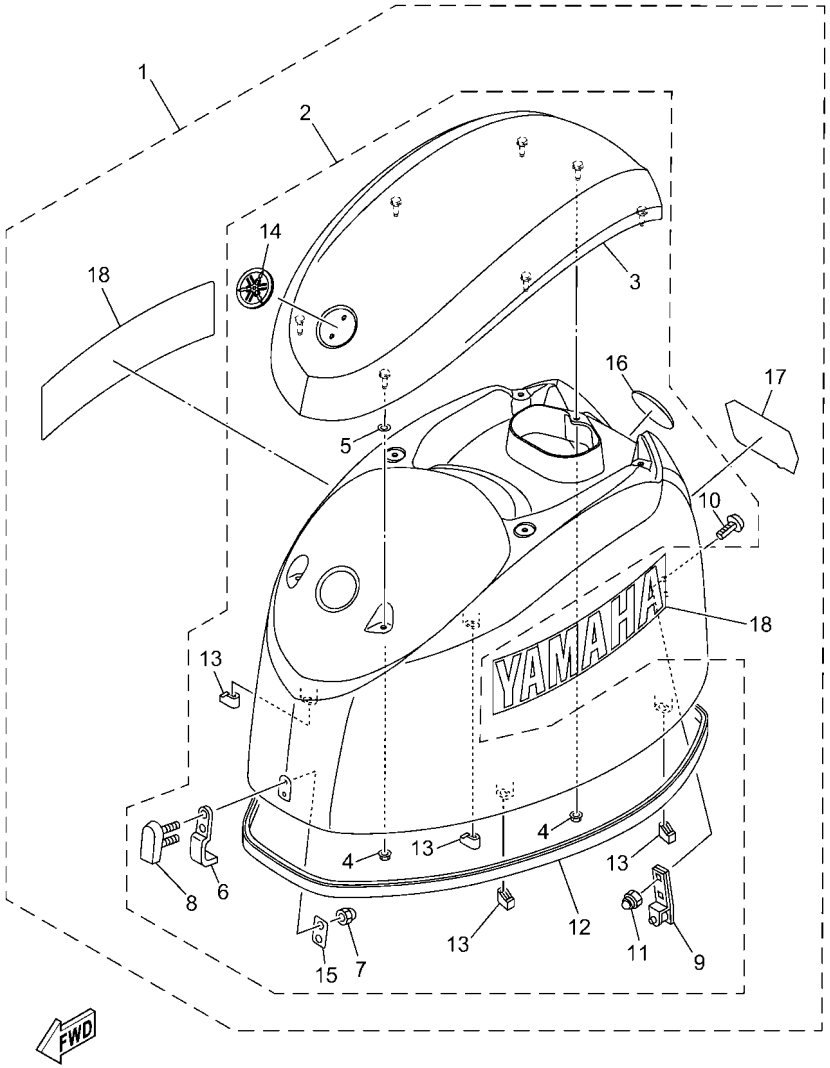


6C2N100-Z020

| REF. NO. | PART NO. N° PIECES | DESCRIPTION DESCRIPTION | 6C8P | | | | | REMARKS REMARQUES |
|---|---|---|---|---|---|---|---|---|
| 1 | 6C6–42610–50–8D | TOP COWLING ASSY<br>CAPOT (ENS.) | 1 | | | | | |
| 2 | 6CJ–4261A–10–8D | .TOP COWLING W/O GRAPHICS<br>.CAPOT SUPERIEUR SANS GRAPHIQUE | 1 | | | | | |
| 3 | 6CJ–42613–10–8D | ..MOLDING, AIR DUCT<br>..MANCHON A AIR | 1 | | | | | |
| 4 | 90179–06M28 | ..NUT<br>..ECROU | 7 | | | | | |
| 5 | 6CB–42545–00 | ..WASHER, PLAIN<br>..RONDELLE, PLATE | 4 | | | | | |
| 6 | 6CJ–42651–00 | ..HOOK<br>..CROCHET | 1 | | | | | |
| 7 | 95380–05800 | ..NUT<br>..ECROU | 2 | | | | | |
| 8 | 6BG–42851–00 | ..COVER, CLAMP<br>..COUVERCLE, BRIDE | 1 | | | | | |
| 9 | 6BG–42652–00 | ..HOOK<br>..CROCHET | 1 | | | | | |
| 10 | 90109–06047 | ..BOLT<br>..BOULON | 2 | | | | | |
| 11 | 90185–06M05 | ..NUT, SELF-LOCKING<br>..ECROU,AUTO-BLOQUANT | 2 | | | | | |
| 12 | 6CJ–42615–10 | ..SEAL<br>..JOINT | 1 | | | | | |
| 13 | 6BG–42662–01 | ..DAMPER<br>..AMORTISSEUR | 4 | | | | | |
| 14 | 6AH–42697–10 | ..TUNING FORK MARK<br>..MARQUE, YAMAHA | 1 | | | | | |
| 15 | 6BG–42649–00 | ..HOLDER, CLAMP BAND<br>..SUPPORT, SANDOW DE SERRAGE | 1 | | | | | |
| 16 | 6DA–42697–00 | ..TUNING FORK MARK<br>..MARQUE, YAMAHA | 1 | | | | | |
| 17 | 6C6–42678–40 | .GRAPHIC, REAR<br>.ADHESIF, ARRIERE | 1 | | | | | |
| 18 | 6CJ–2153A–00 | .EMBLEM, YAMAHA<br>.EMBLEME, YAMAHA | 2 | | | | | |

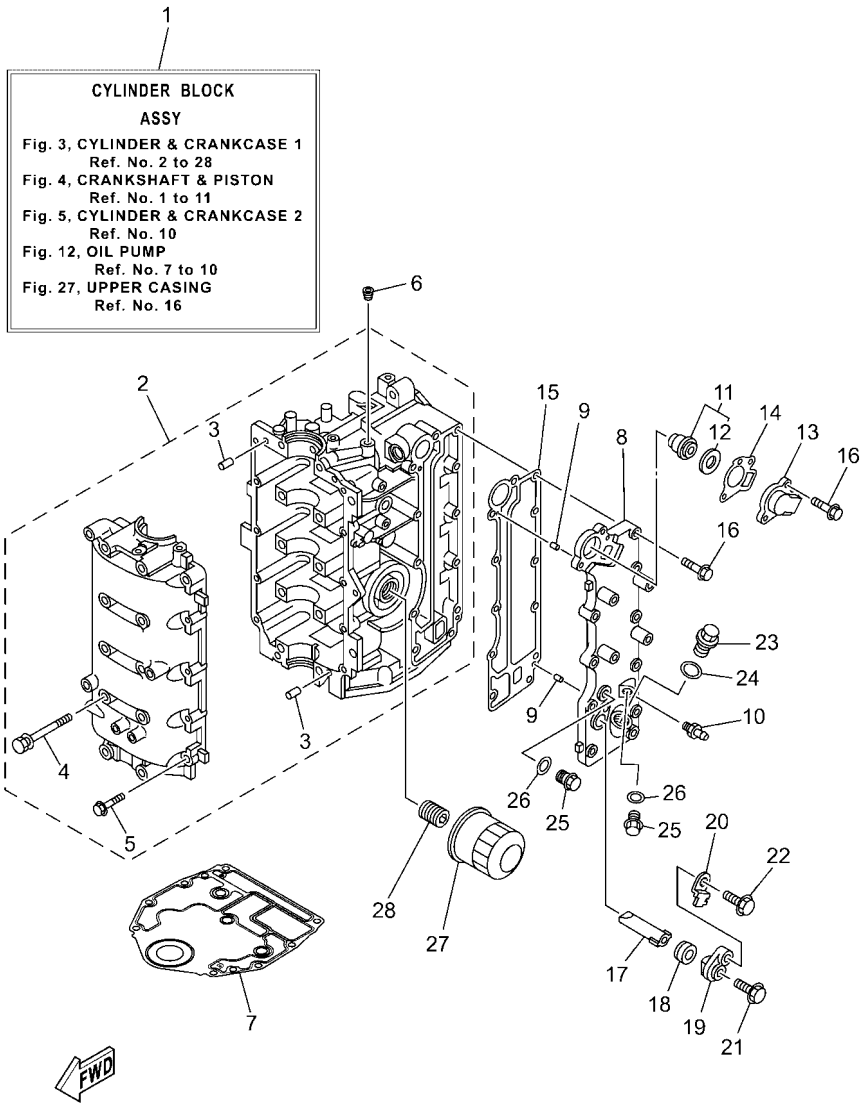


6C1N110-Z030

## FIG. 3 CYLINDER & CRANKCASE 1 — CYLINDRE & CARTER 1

| REF. NO. | PART NO. N° PIECES | DESCRIPTION DESCRIPTION | 6C8P | | | | | REMARKS REMARQUES |
|---|---|---|---|---|---|---|---|---|
| 1 | 6C5–W009B–0B–9S | CYLINDER BLOCK ASSY<br>CYLINDRE GROUPE (ENS.) | 1 | | | | | |
| 2 | 6C5–15100–12 | CRANKCASE ASSY<br>CARTER DE MOTEUR COMPLET | 1 | | | | | |
| 3 | 93606–12019 | .PIN, DOWEL<br>.GOUPILLE | 4 | | | | | |
| 4 | 90119–08154 | .BOLT, WITH WASHER<br>.BOULON, AVEC RONDELLE | 10 | | | | | |
| 5 | 97513–06535 | .BOLT, WITH WASHER<br>.VIS HEXAGONAL AVC RONDELLE | 10 | | | | | |
| 6 | 90344–51003 | PLUG, TAPER SCREW<br>PLOT, FILETE CONIQUE | 1 | | | | | |
| 7 | 6BG–11351–02 | GASKET, CYLINDER<br>JOINT, D'EMBASE | 1 | | | | | |
| 8 | 6C5–41113–11–9S | OUTER COVER, EXHAUST<br>COUVERCLE, ECHAPPEMENT | 1 | | | | | |
| 9 | 93604–10M03 | PIN, DOWEL<br>CLAVETTE | 2 | | | | | |
| 10 | 62Y–12481–10 | PIPE 1<br>DURITE 1 | 1 | | | | | |
| 11 | 6G8–12411–03 | THERMOSTAT<br>THERMOSTAT | 1 | | | | | |
| 12 | 688–12412–00 | .SEAL, THERMOSTAT<br>.JOINT, THERMOSTAT | 1 | | | | | |
| 13 | 6C5–12413–00–9S | COVER, THERMOSTAT<br>COUVERCLE, THERMOSTAT | 1 | | | | | |
| 14 | 62Y–12414–01 | GASKET, COVER<br>JOINT, COUVERCLE | 1 | | | | | |
| 15 | 6C5–41114–10 | GASKET, EXHAUST OUTER COVER<br>JOINT, COUVERCLE D'ECHAPPEMENT | 1 | | | | | |
| 16 | 90119–06MA5 | BOLT, WITH WASHER<br>BOULON, AVEC RONDELLE | 12 | | | | | |
| 17 | 62Y–11325–00 | ANODE<br>ANODE | 1 | | | | | |
| 18 | 66M–11328–01 | GROMMET, ANODE<br>PASSE-FIL | 1 | | | | | |
| 19 | 66M–11327–00–94 | COVER, ANODE<br>COUVERCLE ANODE | 1 | | | | | |
| 20 | 66M–12535–00 | PLATE<br>PLAQUE | 1 | | | | | |
| 21 | 97595–05512 | BOLT, WITH WASHER<br>VIS HEXAGONAL AVC RONDELLE | 1 | | | | | |
| 22 | 97E95–06520 | BOLT, HEXAGON W/W DEEP RECESS<br>VIS HEXAGONAL AVC RONDELLE | 1 | | | | | |
| 23 | 90340–18M09 | PLUG, STRAIGHT SCREW<br>PLOT, FILETE DROIT | 1 | | | | | |
| 24 | 90201–186F1 | WASHER, PLATE<br>RONDELLE, PLATE | 1 | | | | | |
| 25 | 90340–14M06 | PLUG, STRAIGHT SCREW<br>PLOT, FILETE DROIT | 2 | | | | | |
| 26 | 90430–14115 | GASKET<br>JOINT | 2 | | | | | |
| 27 | 5GH–13440–90 | ELEMENT ASSY, OIL CLEANER<br>ELEMENT, FILTRE A HUILE | 1 | | | | | |

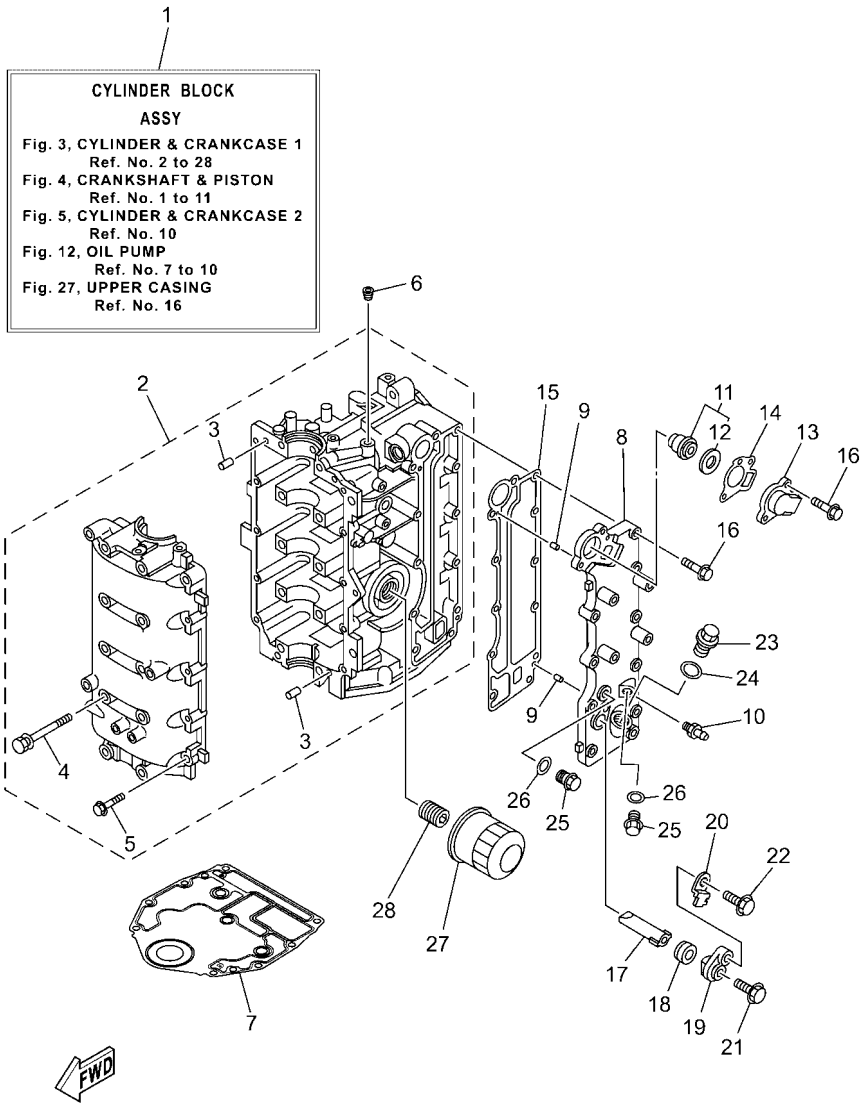


## FIG. 3 CYLINDER & CRANKCASE 1 — CYLINDRE & CARTER 1

| REF. NO. | PART NO. N° PIECES | DESCRIPTION DESCRIPTION | 6C8P | | | | | REMARKS REMARQUES |
|---|---|---|---|---|---|---|---|---|
| 28 | 6C5–12858–A0 | BOLT, UNION<br>BOULON, RACCORD | 1 | | | | | |

## FIG. 4 CRANKSHAFT & PISTON — VILEBREQUIN & PISTON

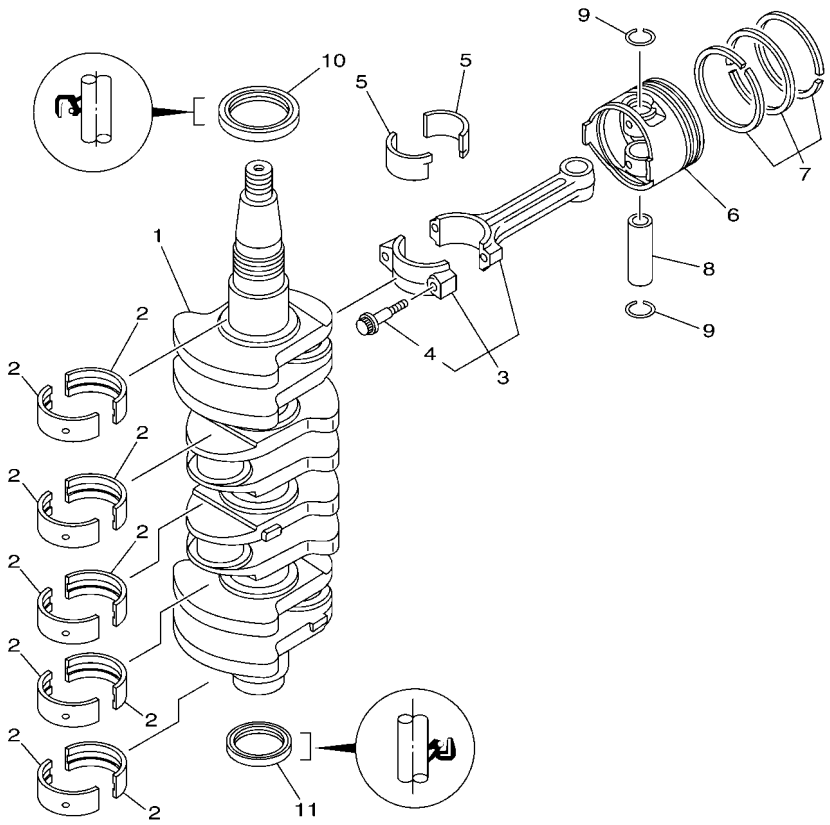


6C17110-K030

| REF. NO. | PART NO. N° PIECES | DESCRIPTION DESCRIPTION | 6C8P | | | | | REMARKS REMARQUES |
|---|---|---|---|---|---|---|---|---|
| 1 | 6C5–11411–11 | CRANKSHAFT<br>VILEBREQUIN COMPLET | 1 | | | | | |
| 2 | 6BG–11416–00 | PLANE BEARING, CRANKSHAFT 1<br>COUSSINET DE VILEBREQUIN 1 | 10 | | | | | UR YELLOW<br>UR YELLOW |
| | 6BG–11416–10 | PLANE BEARING, CRANKSHAFT 1<br>COUSSINET DE VILEBREQUIN 1 | 10 | | | | | UR RED<br>UR RED |
| | 6BG–11416–20 | PLANE BEARING, CRANKSHAFT 1<br>COUSSINET DE VILEBREQUIN 1 | 10 | | | | | UR PINK<br>UR PINK |
| | 6BG–11416–30 | PLANE BEARING, CRANKSHAFT 1<br>COUSSINET DE VILEBREQUIN 1 | 10 | | | | | UR GREEN<br>UR GREEN |
| 3 | 6C5–11650–11 | CONNECTING ROD ASSY<br>BIELLE COMPLETTE | 4 | | | | | |
| 4 | 6C5–11654–00 | .BOLT, CONNECTING ROD<br>.BOULON, BIELLE | 2 | | | | | |
| 5 | 6CJ–11656–01 | PLANE BEARING, CONNECTING ROD<br>ROULEMENT DE BIELLE | 8 | | | | | UR BLACK<br>UR BLACK |
| | 6CJ–11656–11 | PLANE BEARING, CONNECTING ROD<br>ROULEMENT DE BIELLE | 8 | | | | | UR BLUE<br>UR BLUE |
| | 6CJ–11656–21 | PLANE BEARING, CONNECTING ROD<br>ROULEMENT DE BIELLE | 8 | | | | | UR BROWN<br>UR BROWN |
| | 6CJ–11656–31 | PLANE BEARING, CONNECTING ROD<br>ROULEMENT DE BIELLE | 8 | | | | | UR PURPLE<br>UR PURPLE |
| 6 | 69W–11631–01–97 | PISTON (STD)<br>PISTON (STD) | 4 | | | | | |
| | 69W–11635–01 | PISTON (0.25MM O/S)<br>PISTON (0.25MM O/S) | 4 | | | | | AP<br>AP |
| | 69W–11636–01 | PISTON (0.50MM O/S)<br>PISTON (0.50MM O/S) | 4 | | | | | AP<br>AP |
| 7 | 67C–11603–01 | PISTON RING SET (STD)<br>JEU DE SEGMENTS (STD) | 4 | | | | | |
| | 67C–11604–01 | PISTON RING SET (0.25MM O/S)<br>JEU DE SEGMENTS (0.25MM O/S) | 4 | | | | | AP<br>AP |
| | 67C–11605–01 | PISTON RING SET (0.50MM O/S)<br>JEU DE SEGMENTS (0.50MM O/S) | 4 | | | | | AP<br>AP |
| 8 | 62Y–11633–00 | PIN, PISTON<br>AXE, PISTON | 4 | | | | | |
| 9 | 93450–17129 | CIRCLIP<br>CIRCLIP | 8 | | | | | |
| 10 | 93102–43M42 | OIL SEAL<br>JOINT SPY | 1 | | | | | |
| 11 | 93101–35002 | OIL SEAL<br>JOINT SPY | 1 | | | | | |

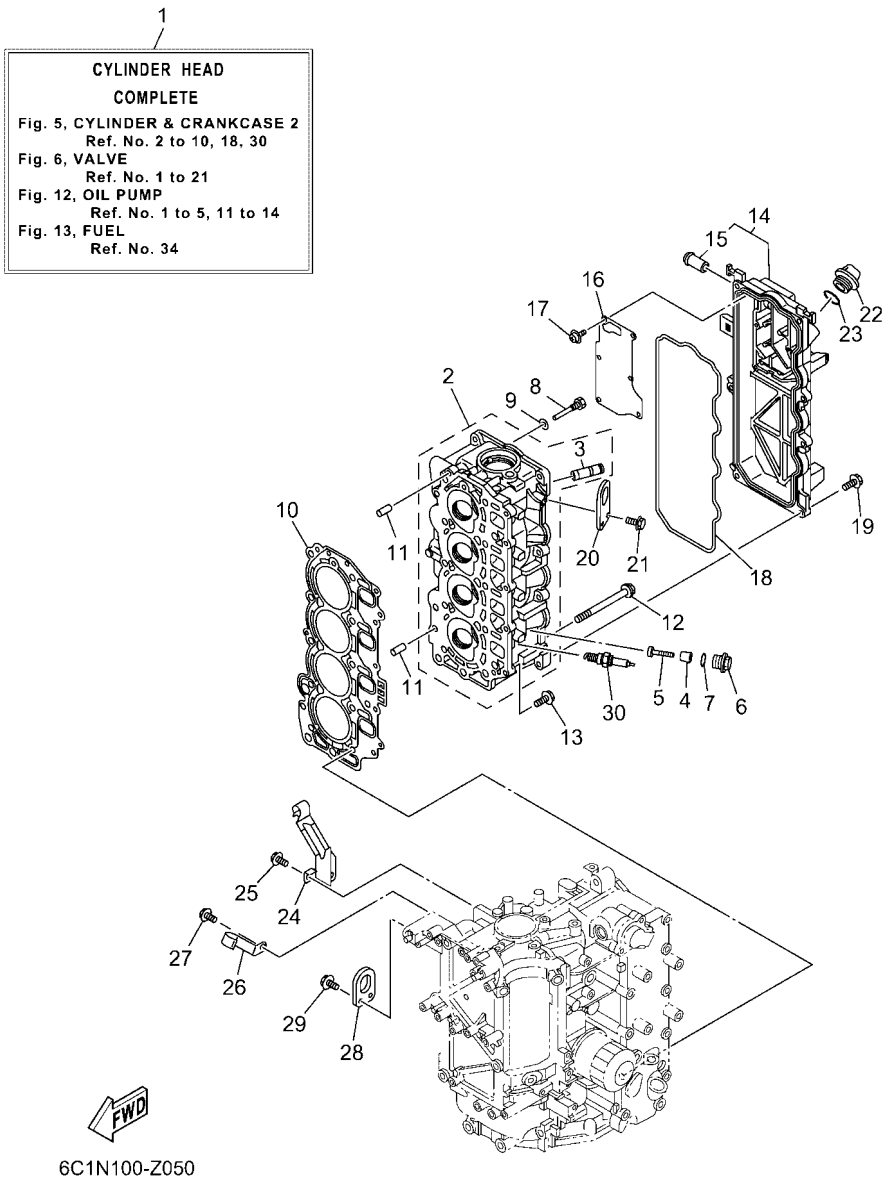


## FIG. 5 CYLINDER & CRANKCASE 2 — CYLINDRE & CARTER 2

| REF. NO. | PART NO. N° PIECES | DESCRIPTION DESCRIPTION | 6C8P | | | | | REMARKS REMARQUES |
|---|---|---|---|---|---|---|---|---|
| 1 | 6C5–W009A–14–9S | CYLINDER HEAD COMPLETE<br>CULASSE (ENS.) | 1 | | | | | |
| 2 | 6C5–11111–20–9S | HEAD, CYLINDER 1<br>CULASSE, 1 | 1 | | | | | |
| 3 | 62Y–11133–31 | .GUIDE, VALVE 1<br>.GUIDE, SOUPAPE 1 | 8 | | | | | |
| 4 | 6G8–11325–00 | ANODE<br>ANODE | 4 | | | | | |
| 5 | 98980–05025 | SCREW, BIND<br>VIS, DE PRESSION | 4 | | | | | |
| 6 | 6G8–11197–B0 | PLUG, BLIND<br>PLOT, BORGNE | 4 | | | | | |
| 7 | 93210–13M63 | O-RING<br>JOINT TORIQUE | 4 | | | | | |
| 8 | 90109–06M65 | BOLT<br>BOULON | 1 | | | | | |
| 9 | 90430–06014 | GASKET<br>JOINT | 1 | | | | | |
| 10 | 6C5–11181–01 | GASKET, CYLINDER HEAD 1<br>JOINT, DE CULASSE 1 | 1 | | | | | |
| 11 | 99530–08012 | PIN, DOWEL<br>GOUJON, D'ASSEMBLAGE | 2 | | | | | |
| 12 | 90105–09009 | BOLT, FLANGE<br>BOULON, A COLLERETTE | 10 | | | | | |
| 13 | 90119–06MA3 | BOLT, WITH WASHER<br>BOULON, AVEC RONDELLE | 5 | | | | | |
| 14 | 6C5–11191–02–9S | COVER, CYLINDER HEAD 1<br>COUVERCLE, CULASSE 1 | 1 | | | | | |
| 15 | 62Y–14485–00 | .PIPE, JOINT<br>.DURITE | 1 | | | | | |
| 16 | 6C5–11168–00 | COVER, BREATHER<br>COUVERCLE, RENIFLARD | 1 | | | | | |
| 17 | 97607–04210 | SCREW, WITH WASHER<br>VIS, AVEC RONDELLE | 6 | | | | | |
| 18 | 62Y–11356–00 | SEAL, CYLINDER 2<br>JOINT, SPY CYLINDRE | 1 | | | | | |
| 19 | 97E95–06520 | BOLT, HEXAGON W/W DEEP RECESS<br>VIS HEXAGONAL AVC RONDELLE | 7 | | | | | |
| 20 | 6CJ–11119–00 | HANGER, ENGINE<br>ANNEAU, LEVAGE | 1 | | | | | |
| 21 | 97E95–06520 | BOLT, HEXAGON W/W DEEP RECESS<br>VIS HEXAGONAL AVC RONDELLE | 2 | | | | | |
| 22 | 6G8–15363–00 | PLUG, OIL<br>PLOT, HUILE | 1 | | | | | |
| 23 | 93210–24M79 | O-RING<br>JOINT TORIQUE | 1 | | | | | |
| 24 | 6C5–15378–00 | HOLDER<br>SUPPORT | 1 | | | | | |
| 25 | 97E95–06514 | BOLT, HEXAGON W/W DEEP RECESS<br>VIS HEXAGONAL AVC RONDELLE | 1 | | | | | |
| 26 | 6C5–15378–11 | HOLDER<br>SUPPORT | 1 | | | | | |
| 27 | 97E95–06514 | BOLT, HEXAGON W/W DEEP RECESS<br>VIS HEXAGONAL AVC RONDELLE | 1 | | | | | |

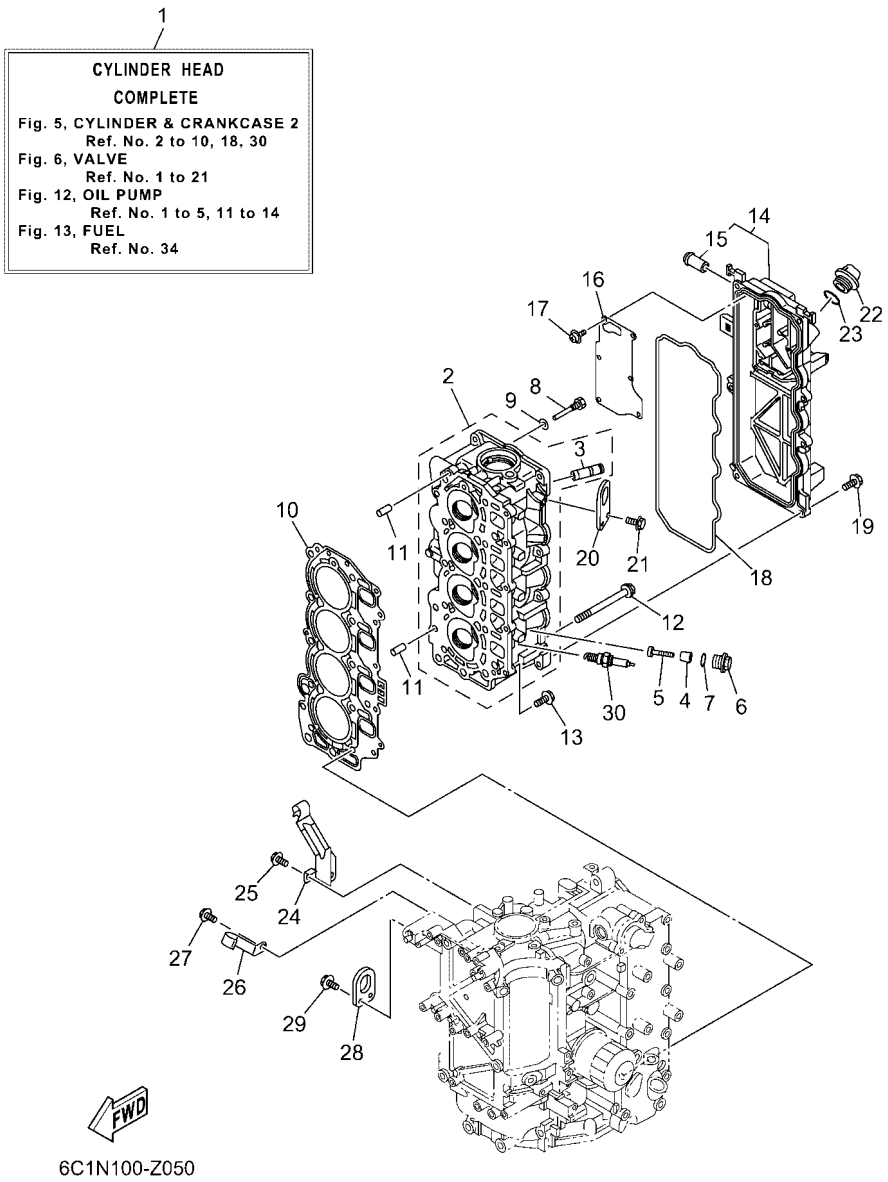


## FIG. 5 CYLINDER & CRANKCASE 2 — CYLINDRE & CARTER 2

| REF. NO. | PART NO. N° PIECES | DESCRIPTION DESCRIPTION | 6C8P | | | | | REMARKS REMARQUES |
|---|---|---|---|---|---|---|---|---|
| 28 | 62Y–11119–00 | HANGER, ENGINE<br>ANNEAU, LEVAGE | 1 | | | | | |
| 29 | 97E95–06520 | BOLT, HEXAGON W/W DEEP RECESS<br>VIS HEXAGONAL AVC RONDELLE | 2 | | | | | |
| 30 | 94702–00418 | PLUG, SPARK (NGK DPR6EB-9)<br>BOUGIE D,ALLUMAGE (NGK DPR6EB- | 4 | | | | | |

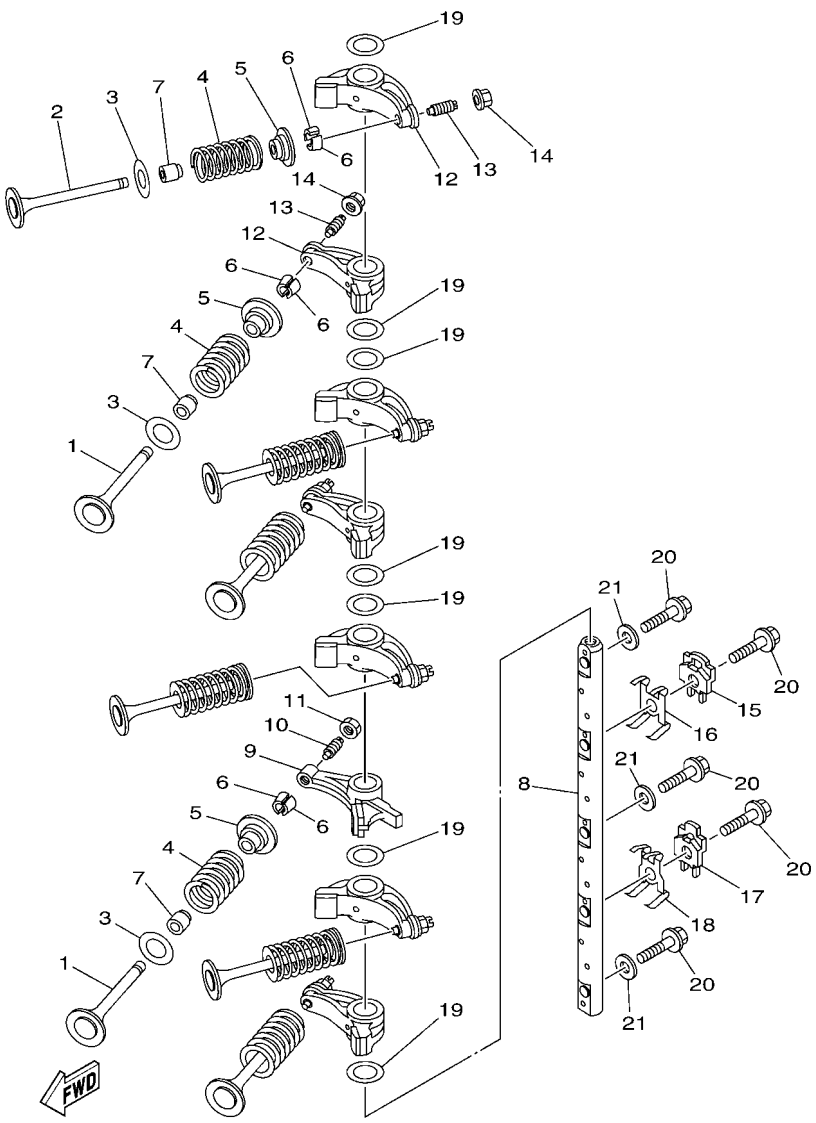


6C12100-E050

## FIG. 6 VALVE SOUPAPE

| REF. NO. | PART NO. N° PIECES | DESCRIPTION DESCRIPTION | 6C8P | | | | | REMARKS REMARQUES |
|---|---|---|---|---|---|---|---|---|
| 1 | 69W–12111–00 | VALVE, INTAKE<br>SOUPAPE, ADMISSION | 4 | | | | | |
| 2 | 69W–12121–10 | VALVE, EXHAUST<br>SOUPAPE, ECHAPPEMENT | 4 | | | | | |
| 3 | 62Y–12116–00 | SEAT, VALVE SPRING<br>SIEGE, RESSORT DE SOUPAPE | 8 | | | | | |
| 4 | 51Y–12114–00 | SPRING, VALVE OUTER<br>RESSORT DE SOUPAPE, EXTERNE | 8 | | | | | |
| 5 | 30X–12117–00 | RETAINER, VALVE SPRING<br>BUTEE DE RESSORT DE SOUPAPE | 8 | | | | | |
| 6 | 30X–12118–00 | LOCK, VALVE SPRING RETAINER<br>FRAISE, SOUPAPE | 16 | | | | | |
| 7 | 51Y–12119–00 | SEAL, VALVE STEM<br>JOINT, QUEUE DE SOUPAPE | 8 | | | | | |
| 8 | 6C5–12146–00 | SHAFT, ROCKER<br>AXE, CULBUTEUR | 1 | | | | | |
| 9 | 62Y–12151–01 | ARM, VALVE ROCKER<br>CULBUTEUR | 1 | | | | | |
| 10 | 64J–12159–00 | SCREW, VALVE ADJUSTING<br>VIS, REGLAGE DE SOUPAPE | 1 | | | | | |
| 11 | 62Y–12158–00 | NUT, LOCK<br>CONTRE-ECROU | 1 | | | | | |
| 12 | 6C5–12151–00 | ARM, VALVE ROCKER<br>CULBUTEUR | 7 | | | | | |
| 13 | 6C5–12159–00 | SCREW, VALVE ADJUSTING<br>VIS, REGLAGE DE SOUPAPE | 7 | | | | | |
| 14 | 6C5–12158–00 | NUT, LOCK<br>CONTRE-ECROU | 7 | | | | | |
| 15 | 6C5–12231–00 | GUIDE, STOPPER 1<br>GUIDE, BUTEE 1 | 1 | | | | | |
| 16 | 6C5–12233–00 | PLATE, GUIDE STOPPER 1<br>PLAQUE, GUIDE BUTEE 1 | 1 | | | | | |
| 17 | 6C5–12241–00 | GUIDE, STOPPER 2<br>GUIDE, BUTEE 2 | 1 | | | | | |
| 18 | 6C5–12243–00 | PLATE, GUIDE STOPPER 2<br>PLAQUE, GUIDE BUTEE 2 | 1 | | | | | |
| 19 | 90201–16014 | WASHER, PLATE<br>RONDELLE, PLATE | 7 | | | | | |
| 20 | 90105–08060 | BOLT, FLANGE<br>BOULON, A COLLERETTE | 5 | | | | | |
| 21 | 92990–08200 | WASHER, PLAIN<br>RONDELLE, PLATE | 3 | | | | | |

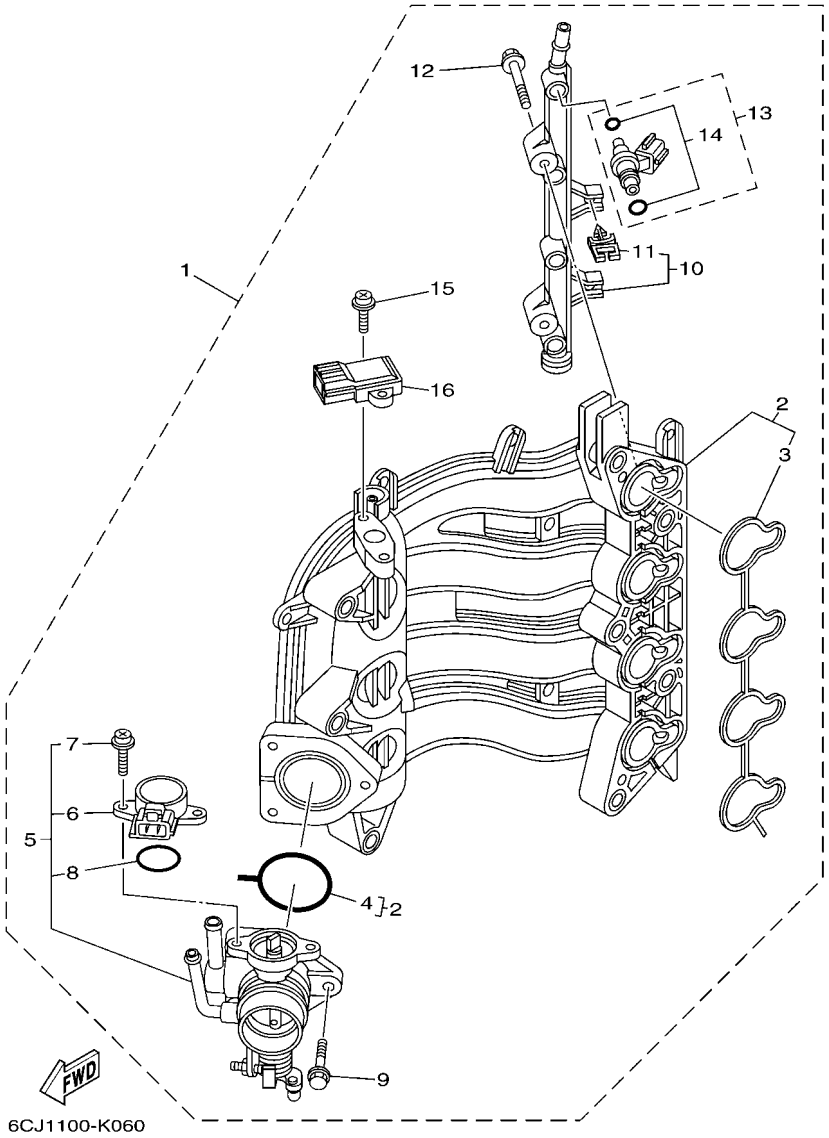


## FIG. 7 INTAKE 1 — ADMISSION 1

| REF. NO. | PART NO. N° PIECES | DESCRIPTION DESCRIPTION | 6C8P | | | | | REMARKS REMARQUES |
|---|---|---|---|---|---|---|---|---|
| 1 | 6CJ–14200–02 | INTAKE ASSY<br>ADMISSION (ENS.) | 1 | | | | | |
| 2 | 6CJ–13641–01 | .MANIFOLD, INTAKE 1<br>.TUBULURE, ADMISSION 1 | 1 | | | | | |
| 3 | 6C5–13645–00 | ..GASKET, MANIFOLD 1<br>..JOINT, TUBULURE 1 | 1 | | | | | |
| 4 | 6C5–13557–00 | ..GASKET<br>..JOINT | 1 | | | | | |
| 5 | 6CJ–13750–01 | .THROTTLE BODY ASSY<br>.CARTER D'ACCELERATEUR COMPLET | 1 | | | | | |
| 6 | 6C5–85885–00 | ..THROTTLE SENSOR ASSY<br>..SENSITOMETRE (ENS.) | 1 | | | | | |
| 7 | 6C5–81145–00 | ..SCREW 1<br>..VIS 1 | 2 | | | | | |
| 8 | 6C5–8182L–00 | ..O-RING 1<br>..JOINT TORIQUE 1 | 1 | | | | | |
| 9 | 6C5–14496–00 | .BOLT<br>.BOULON | 3 | | | | | |
| 10 | 6C5–13161–00 | .PIPE, DELIVERY 1<br>.DURITE REFOULEMENT 1 | 1 | | | | | |
| 11 | 90464–07M56 | ..CLAMP<br>..BRIDE | 2 | | | | | |
| 12 | 6C5–14446–00 | .BOLT<br>.BOULON | 2 | | | | | |
| 13 | 6C5–13761–00 | .INJECTOR<br>.INJECTEUR | 4 | | | | | |
| 14 | 6C5–1410B–00 | ..PACKING KIT<br>..POCHETTE DE JOINTS | 1 | | | | | |
| 15 | 6C5–81146–10 | .SCREW 2<br>.VIS 2 | 2 | | | | | |
| 16 | 68F–83688–00 | .SENSOR ASSY<br>.SONDE (ENS.) | 1 | | | | | |

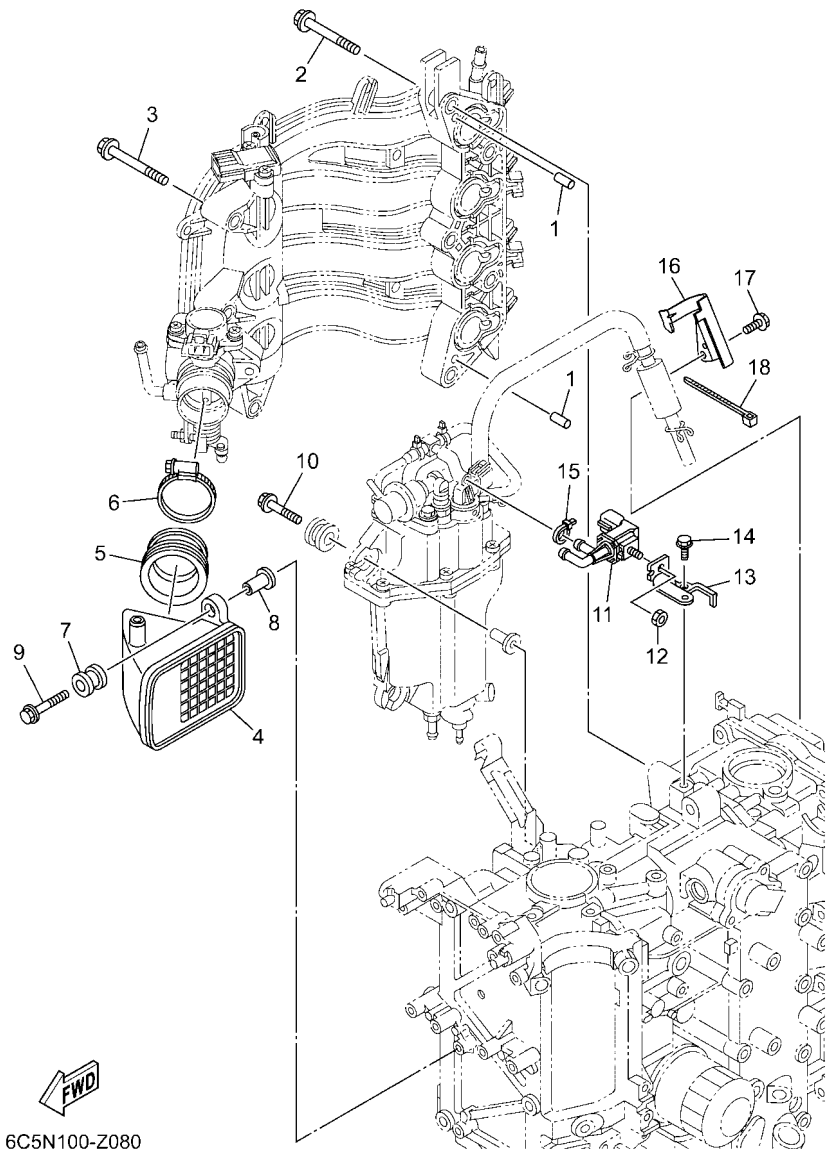


6C5N100-Z080

## FIG. 8 INTAKE 2 — ADMISSION 2

| REF. NO. | PART NO. N° PIECES | DESCRIPTION DESCRIPTION | 6C8P | | | | | REMARKS REMARQUES |
|---|---|---|---|---|---|---|---|---|
| 1 | 93608–12M05 | PIN, DOWEL<br>AXE | 2 | | | | | |
| 2 | 90119–08190 | BOLT, WITH WASHER<br>BOULON, AVEC RONDELLE | 5 | | | | | |
| 3 | 90119–06304 | BOLT, WITH WASHER<br>BOULON, AVEC RONDELLE | 3 | | | | | |
| 4 | 6C5–14440–10 | SILENCER ASSY, INTAKE<br>SIENCIEUX D'ADMISSION | 1 | | | | | |
| 5 | 6C5–14453–02 | JOINT, AIR CLEANER 1<br>RACCORD, FILTRE A AIR 1 | 1 | | | | | |
| 6 | 90450–50001 | HOSE CLAMP ASSY<br>BRIDE, DE DURITE | 1 | | | | | |
| 7 | 6A0–82317–01 | DAMPER, IGNITION COIL<br>AMORTISSEUR, BOBINE D'ALLUM | 2 | | | | | |
| 8 | 90387–06119 | COLLAR<br>COLLERETTE | 2 | | | | | |
| 9 | 90119–06297 | BOLT, WITH WASHER<br>BOULON, AVEC RONDELLE | 2 | | | | | |
| 10 | 90119–06291 | BOLT, WITH WASHER<br>BOULON, AVEC RONDELLE | 3 | | | | | |
| 11 | 6C5–86120–00 | SOLENOID VALVE ASSY<br>SOLENOIDE | 1 | | | | | |
| 12 | 95380–06600 | NUT, HEXAGON<br>ECROU | 1 | | | | | |
| 13 | 6BG–86112–10 | STAY, SOLENOID<br>SUPPORT, SOLENOIDE | 1 | | | | | |
| 14 | 97E95–06516 | BOLT, HEXAGON W/W DEEP RECESS<br>VIS HEXAGONAL AVC RONDELLE | 1 | | | | | |
| 15 | 90465–11M10 | CLAMP<br>BRIDE | 1 | | | | | |
| 16 | 6C5–13428–01 | BRACKET, STRAINER 1<br>SUPPORT, FILTRE 1 | 1 | | | | | |
| 17 | 97E95–06516 | BOLT, HEXAGON W/W DEEP RECESS<br>VIS HEXAGONAL AVC RONDELLE | 1 | | | | | |
| 18 | 90465–13M18 | CLAMP<br>BRIDE | 1 | | | | | |

## FIG. 9 INTAKE 3 — ADMISSION 3

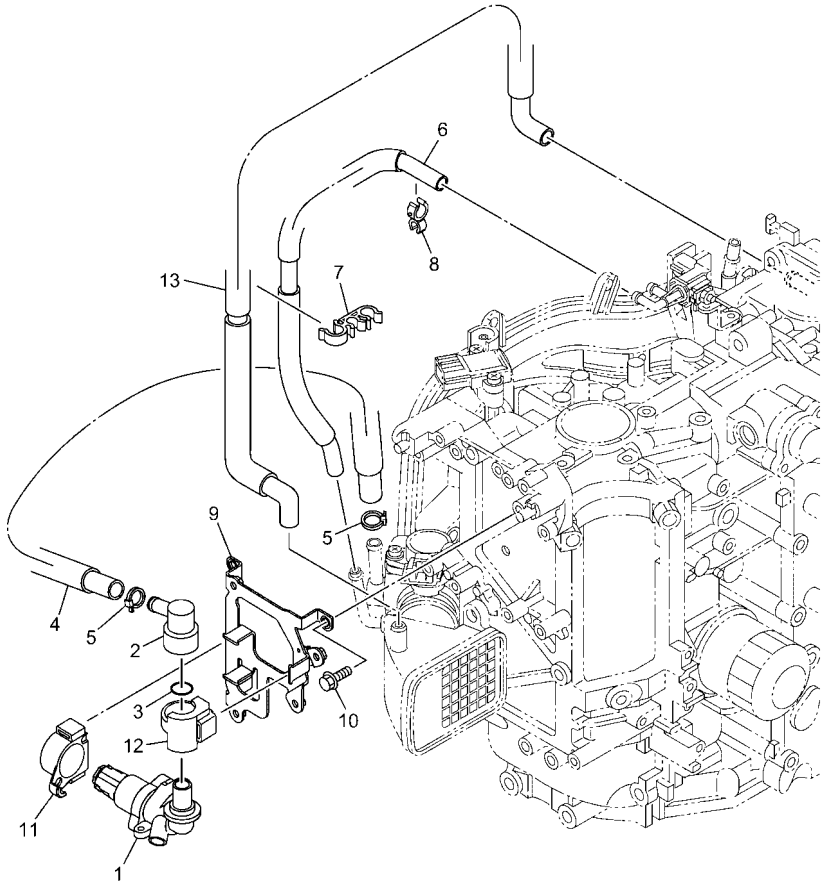

6C1N100-Z090

| REF. NO. | PART NO. N° PIECES | DESCRIPTION DESCRIPTION | 6C8P | | | | | REMARKS REMARQUES |
|---|---|---|---|---|---|---|---|---|
| 1 | 6C5–13713–02 | VALVE, IDLE SPEED CONTROL<br>SOUPAPE, AJUSTEMENT DE VITESSE | 1 | | | | | |
| 2 | 6CJ–11372–00 | NIPPLE, HOSE<br>RACCORD, TUYAU | 1 | | | | | |
| 3 | 93210–33003 | O-RING<br>JOINT TORIQUE | 1 | | | | | |
| 4 | 6CJ–13543–10 | HOSE, AIR<br>DURITE, A AIR | 1 | | | | | |
| 5 | 90465–11M10 | CLAMP<br>BRIDE | 2 | | | | | |
| 6 | 6CJ–12576–00 | HOSE 1<br>TUYAU 1 | 1 | | | | | |
| 7 | 90464–15008 | CLAMP<br>BRIDE | 1 | | | | | |
| 8 | 90464–12006 | CLAMP<br>BRIDE | 1 | | | | | |
| 9 | 6C5–82588–00 | PLATE<br>PLAQUE | 1 | | | | | |
| 10 | 97E95–06516 | BOLT, HEXAGON W/W DEEP RECESS<br>VIS HEXAGONAL AVC RONDELLE | 3 | | | | | |
| 11 | 6C5–82572–00 | GROMMET 1<br>VIS | 1 | | | | | |
| 12 | 6C5–82573–00 | GROMMET 2<br>PASSE-FIL 2 | 1 | | | | | |
| 13 | 6C5–1531A–20 | HOSE, BREATHER 1<br>DURITE DE RENIFLARD 1 | 1 | | | | | |

## FIG. 10 FUEL INJECTION PUMP 1 POMPE A INJECTEUR 1

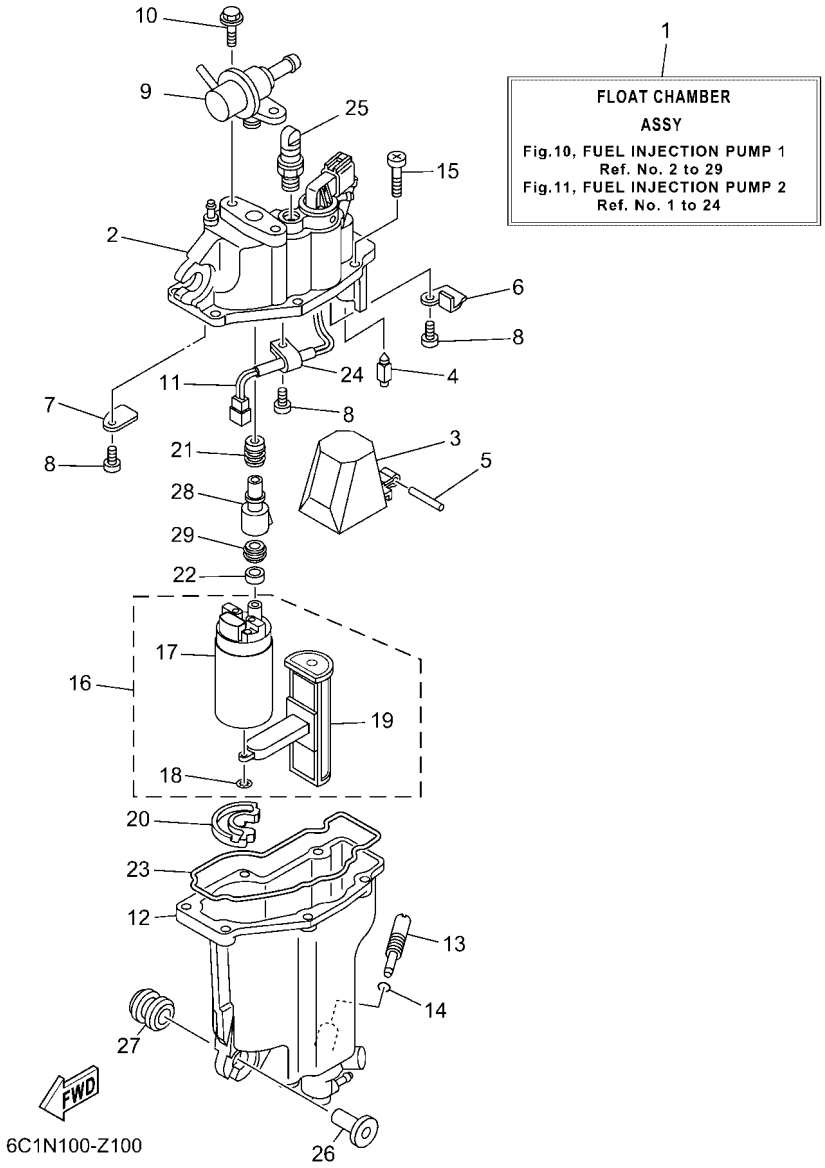


| REF. NO. | PART NO. N° PIECES | DESCRIPTION DESCRIPTION | 6C8P | | | | | REMARKS REMARQUES |
|---|---|---|---|---|---|---|---|---|
| 1 | 6C5–14180–60 | FLOAT CHAMBER ASSY<br>CUVE DE FLOTTEUR | 1 | | | | | |
| 2 | 6C5–14182–20 | COVER, FLOAT CHAMBER<br>COUVERCLE, CUVE DE FLOTTEUR | 1 | | | | | |
| 3 | 6C5–14985–00 | FLOAT<br>FLOTTEUR | 1 | | | | | |
| 4 | 6C5–14546–10 | VALVE, NEEDLE<br>POINTEAU | 1 | | | | | |
| 5 | 6C5–14386–00 | PIN, FLOAT<br>AXE, FLOTTEUR | 1 | | | | | |
| 6 | 6C5–2441R–10 | PLATE, BAFFLE 1<br>SEPARATEUR 1 | 1 | | | | | |
| 7 | 6C5–2441T–10 | PLATE, BAFFLE 2<br>SEPARATEUR 2 | 1 | | | | | |
| 8 | 6C5–24453–00 | SCREW<br>VIS | 3 | | | | | |
| 9 | 6C5–13906–02 | REGULATOR, PRESSURE<br>REGULATEUR DE PRESSION | 1 | | | | | |
| 10 | 6C5–24592–00 | BOLT<br>BOLTE | 2 | | | | | |
| 11 | 6C5–87226–10 | WIRE HARNESS ASSY<br>ENS. FAISCEAU ELECTRIQUE | 1 | | | | | |
| 12 | 6C5–14960–20 | BODY ASSY<br>CARTER (ENS.) | 1 | | | | | |
| 13 | 6C5–14191–00 | PLUG, DRAIN<br>PLOT, VIDANGE | 1 | | | | | |
| 14 | 6C5–14397–00 | O-RING<br>JOINT TORIQUE | 1 | | | | | |
| 15 | 6C5–14567–00 | SCREW<br>VIS | 6 | | | | | |
| 16 | 6C5–13907–10 | FUEL PUMP COMP.<br>POMPE A CARBURANT COMP. | 1 | | | | | |
| 17 | 6FP–13907–01 | .FUEL PUMP COMP.<br>.POMPE A CARBURANT COMP. | 1 | | | | | |
| 18 | 6C5–14127–10 | .CLIP<br>.JONC | 1 | | | | | |
| 19 | 6C5–13915–01 | .FILTER<br>.FILTRE | 1 | | | | | |
| 20 | 6C5–13593–10 | DAMPER<br>AMORTISSEUR | 1 | | | | | |
| 21 | 6C5–13781–00 | DAMPER, PUMP<br>AMORTISSEUR, POMPE | 1 | | | | | |
| 22 | 6C5–13716–10 | COLLAR<br>COLLERETTE | 1 | | | | | |
| 23 | 6C5–14984–10 | GASKET, FLOAT CHAMBER<br>JOINT, CUVE DE FLOTTEUR | 1 | | | | | |
| 24 | 6C5–21337–10 | CLAMP, CABLE<br>COLLIER, CABLE | 1 | | | | | |
| 25 | 6C5–14225–00 | CAP<br>COUVERCLE | 1 | | | | | |
| 26 | 90387–06M69 | COLLAR<br>COLLERETTE | 3 | | | | | |
| 27 | 90480–09M12 | GROMMET<br>PASSE-FIL | 3 | | | | | |

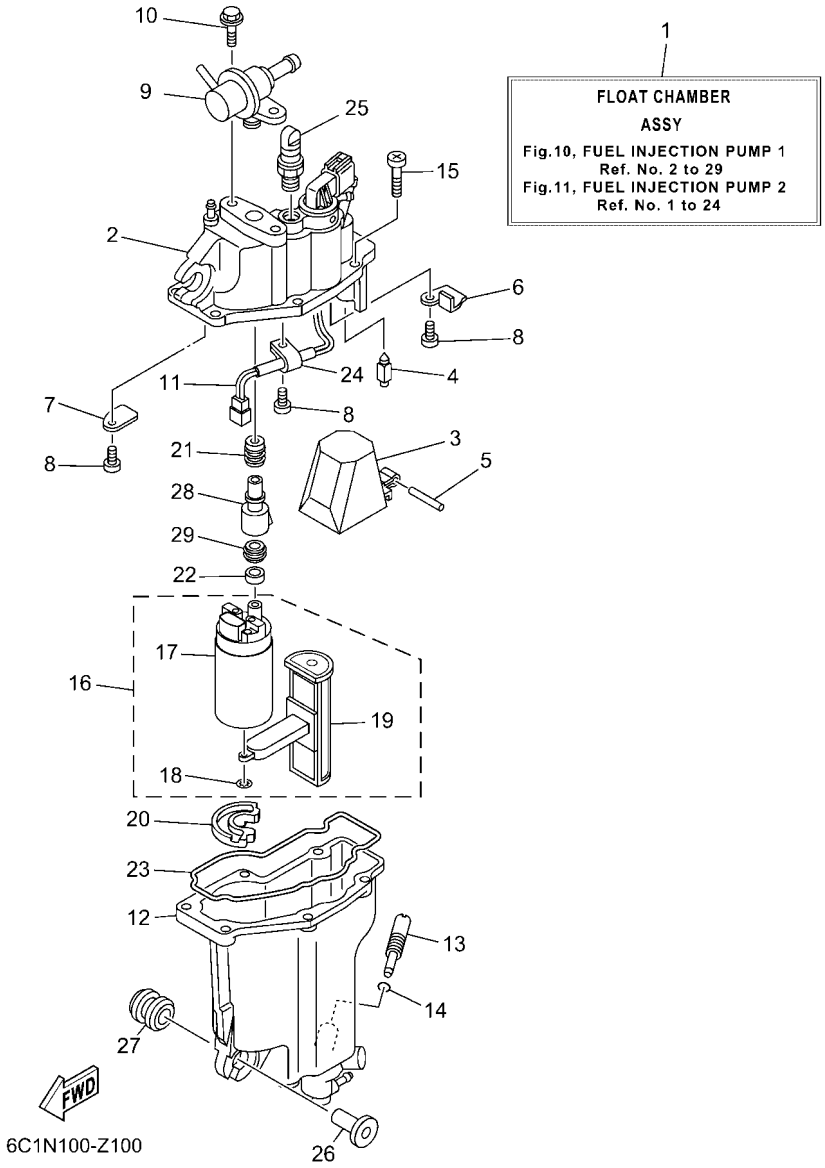


## FIG. 10 FUEL INJECTION PUMP 1 POMPE A INJECTEUR 1

| REF. NO. | PART NO. N° PIECES | DESCRIPTION DESCRIPTION | 6C8P | | | | | REMARKS REMARQUES |
|---|---|---|---|---|---|---|---|---|
| 28 | 6C5–13132–00 | JOINT<br>RACCORD | 1 | | | | | |
| 29 | 6C5–13781–10 | DAMPER, PUMP<br>AMORTISSEUR, POMPE | 1 | | | | | |

## FIG. 11 FUEL INJECTION PUMP 2 POMPE A INJECTEUR 2

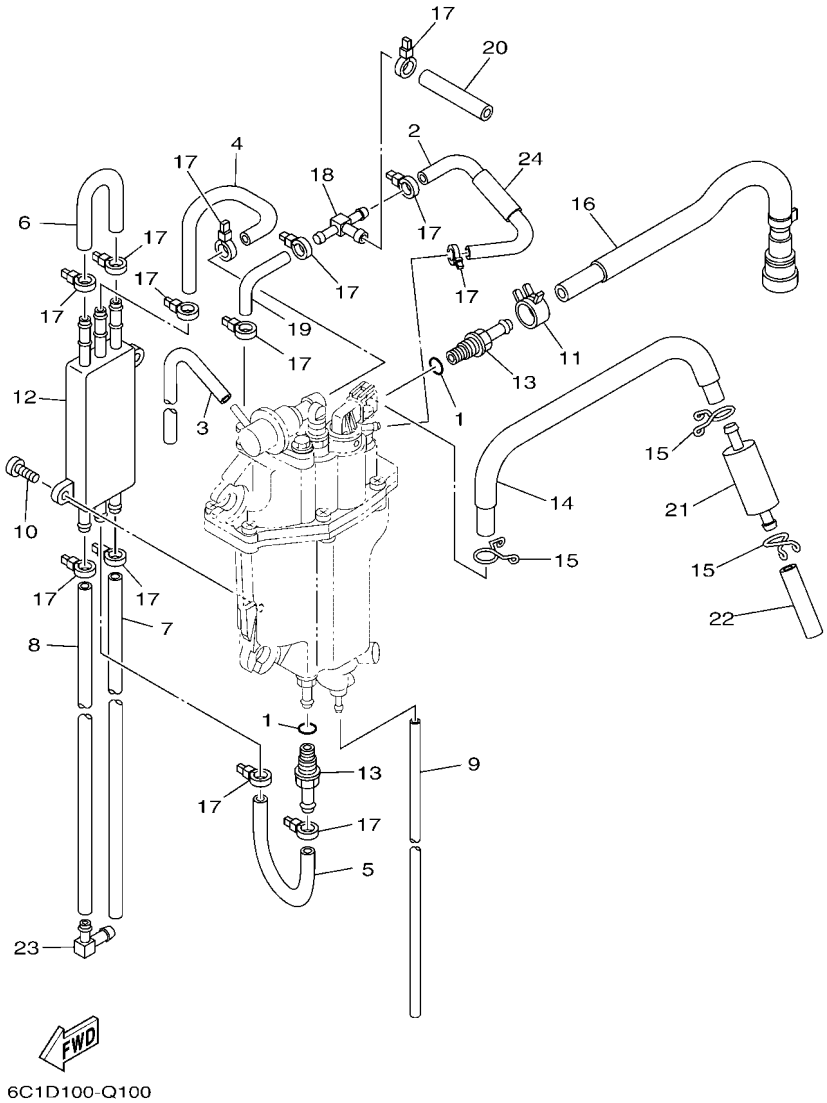


| REF. NO. | PART NO. N° PIECES | DESCRIPTION DESCRIPTION | 6C8P | | | | | REMARKS REMARQUES |
|---|---|---|---|---|---|---|---|---|
| 1 | 6C5–13739–00 | O-RING<br>JOINT TORIQUE | 2 | | | | | |
| 2 | 6C5–13546–00 | HOSE 2<br>DURITE 2 | 1 | | | | | |
| 3 | 6C5–13542–00 | HOSE, VACUUM SENSING 1<br>DURITE, SOUS VIDE DETECTION 1 | 1 | | | | | |
| 4 | 6C5–24321–20 | PIPE 10<br>DURITE 10 | 1 | | | | | |
| 5 | 6C5–24322–20 | PIPE 11<br>DURITE 11 | 1 | | | | | |
| 6 | 6BG–24323–00 | PIPE 12<br>DURITE 12 | 1 | | | | | |
| 7 | 6CJ–24324–00 | PIPE 13<br>DURITE 13 | 1 | | | | | |
| 8 | 6CJ–24325–00 | PIPE 14<br>DURITE 14 | 1 | | | | | |
| 9 | 6BG–14149–00 | PIPE<br>DURITE | 1 | | | | | |
| 10 | 6C5–24444–00 | SCREW<br>VIS | 2 | | | | | |
| 11 | 6C5–13577–00 | CLIP<br>AGRAFE | 1 | | | | | |
| 12 | 6C5–21841–01 | COOLER<br>RADIATEUR | 1 | | | | | |
| 13 | 6C5–14251–00 | NIPPLE<br>RACCORD | 2 | | | | | |
| 14 | 6C5–14148–20 | PIPE<br>DURITE | 1 | | | | | |
| 15 | 6C5–24387–00 | CLIP<br>SANDOW | 3 | | | | | |
| 16 | 6C5–13974–00 | PIPE, FUEL 4<br>TUBE 4, CARBURANT | 1 | | | | | |
| 17 | 90465–11M10 | CLAMP<br>BRIDE | 13 | | | | | |
| 18 | 6C5–24379–00 | PIPE, JOINT 4<br>DURITE RACCORDEMENT 4 | 1 | | | | | |
| 19 | 6C5–13545–00 | HOSE 1<br>DURITE 1 | 1 | | | | | |
| 20 | 6C5–13547–00 | HOSE 3<br>DURITE 3 | 1 | | | | | |
| 21 | 6C5–24251–01 | STRAINER 1<br>FILTRE 1 | 1 | | | | | |
| 22 | 6C5–2451B–20 | HOSE, FUEL INLET<br>DURITE | 1 | | | | | |
| 23 | 6C5–1410F–00 | NIPPLE, 1<br>RACCORD, 1 | 1 | | | | | |
| 24 | 6C5–13548–00 | HOSE, AIR 4<br>DURITE, A AIR 4 | 1 | | | | | |

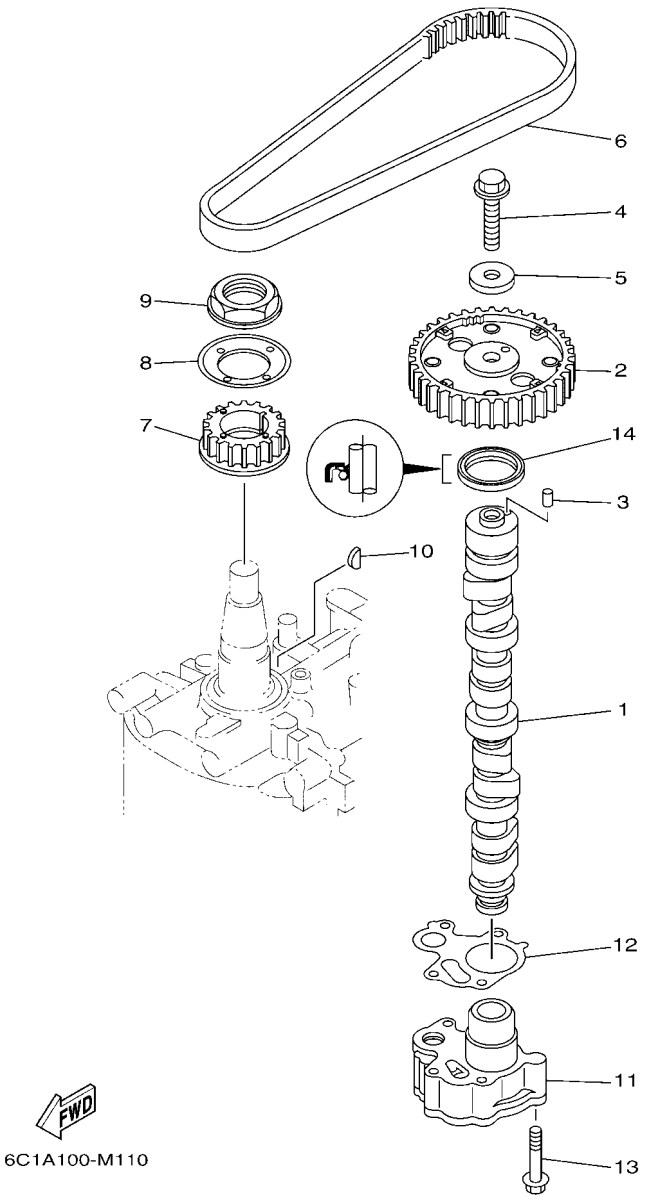


## FIG. 12 OIL PUMP — POMPE A HUILE

| REF. NO. | PART NO. N° PIECES | DESCRIPTION DESCRIPTION | 6C8P | | | | | REMARKS REMARQUES |
|---|---|---|---|---|---|---|---|---|
| 1 | 6C5–12171–00 | CAMSHAFT 1<br>ARBRE A CAMES 1 | 1 | | | | | |
| 2 | 6C5–11537–10 | GEAR, DRIVEN<br>PIGNON SECONDAIRE | 1 | | | | | |
| 3 | 93605–17002 | PIN, DOWEL<br>AXE | 1 | | | | | |
| 4 | 95817–10035 | BOLT, FLANGE<br>BOULON, A COLLERETTE | 1 | | | | | |
| 5 | 90201–10144 | WASHER, PLATE<br>RONDELLE, PLATE | 1 | | | | | |
| 6 | 6C5–46241–00 | BELT<br>COURROIE TRAPEZOIDALE | 1 | | | | | |
| 7 | 6C5–11536–00 | GEAR, DRIVE<br>ENGRENAGE, MENANT | 1 | | | | | |
| 8 | 62Y–11557–00 | WASHER 1<br>RONDELLE 1 | 1 | | | | | |
| 9 | 90179–35001 | NUT<br>ECROU | 1 | | | | | |
| 10 | 90280–03017 | KEY, WOODRUFF<br>CLAVETTE, DEMI-LUNE | 1 | | | | | |
| 11 | 6C5–13300–01 | OIL PUMP ASSY<br>POMPE A HUILE COMPLETE | 1 | | | | | |
| 12 | 6C5–13329–00 | GASKET, PUMP COVER<br>JOINT, COUVERCLE DE POMPE | 1 | | | | | |
| 13 | 90119–06025 | BOLT, WITH WASHER<br>BOULON, AVEC RONDELLE | 4 | | | | | |
| 14 | 93102–37M40 | OIL SEAL<br>JOINT SPY | 1 | | | | | |

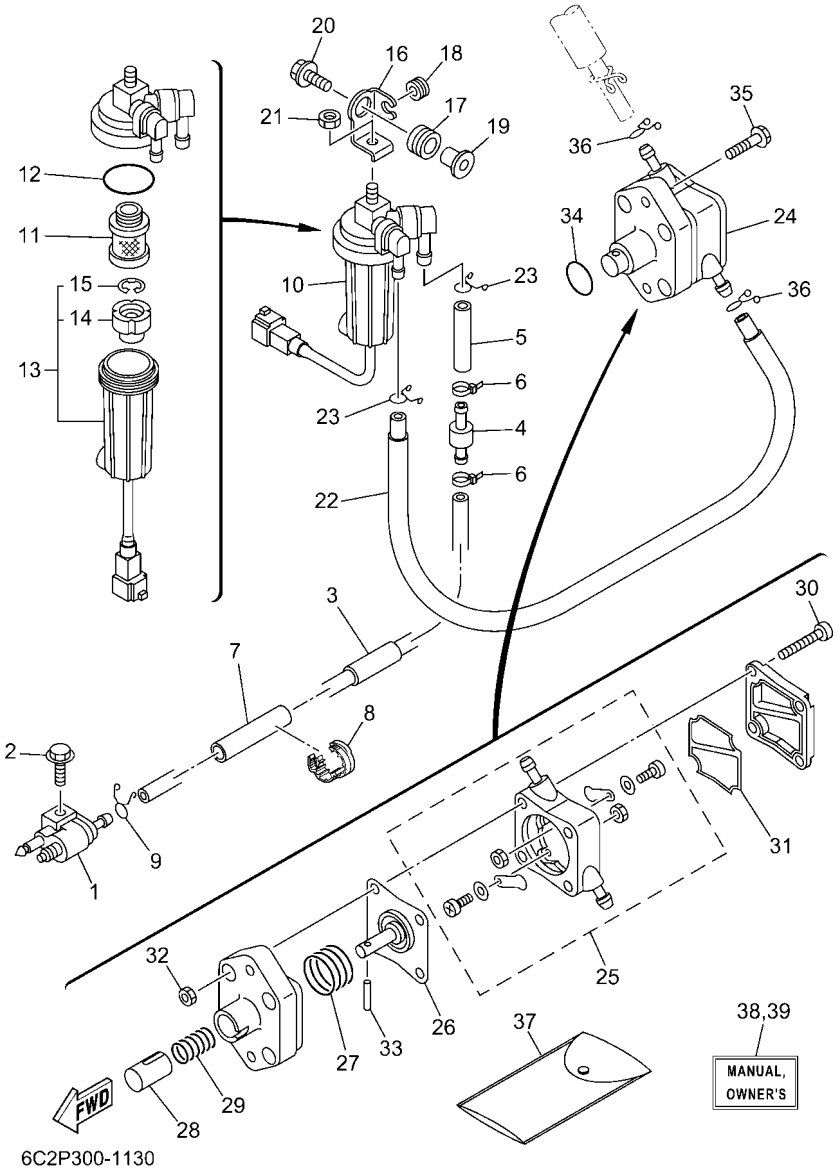


## FIG. 13 FUEL — CARBURANT

| REF. NO. | PART NO. N° PIECES | DESCRIPTION DESCRIPTION | 6C8P | | | | | REMARKS REMARQUES |
|---|---|---|---|---|---|---|---|---|
| 1 | 6G1–24304–11 | FUEL PIPE JOINT COMP. 1<br>DURITE RACCORDEMT. A ESSENCE | 1 | | | | | |
| 2 | 97E95–06525 | BOLT, HEXAGON W/W DEEP RECESS<br>VIS HEXAGONAL AVC RONDELLE | 1 | | | | | |
| 3 | 6C5–24313–20 | PIPE 3<br>DURITE 3 | 1 | | | | | |
| 4 | 67F–24377–00 | PIPE, JOINT 2<br>DURITE RACCORDEMENT 2 | 1 | | | | | |
| 5 | 90445–13020 | HOSE (L40)<br>DURITE (L40) | 1 | | | | | |
| 6 | 90465–11M10 | CLAMP<br>BRIDE | 2 | | | | | |
| 7 | 90446–13M11 | HOSE (L65)<br>DURITE (L65) | 1 | | | | | |
| 8 | 90464–13227 | CLAMP<br>BRIDE | 1 | | | | | |
| 9 | 90467–09M17 | CLIP<br>JONC | 1 | | | | | |
| 10 | 6D8–24560–02 | FILTER ASSY<br>ENS FILTRE | 1 | | | | | |
| 11 | 6D8–24563–00 | .ELEMENT, FILTER<br>.ELEMENT, FILTRE | 1 | | | | | |
| 12 | 6D8–24564–00 | .GASKET<br>.JOINT | 1 | | | | | |
| 13 | 6D8–WS24B–01 | .CUP, FILTER (WITH TAG)<br>.CUVETTE, FILTRE (AVEC TAG) | 1 | | | | | |
| 14 | 6D8–24469–00 | ..FLOAT, WATER LEVEL<br>..FLOTTEUR | 1 | | | | | |
| 15 | 6D8–24519–00 | ..CLIP<br>..JONC | 1 | | | | | |
| 16 | 6C5–24566–11 | BRACKET, FILTER<br>SUPPORT, FILTRE | 1 | | | | | |
| 17 | 90480–16013 | GROMMET<br>PASSE-FIL | 1 | | | | | |
| 18 | 90480–10M58 | GROMMET<br>PASSE-FIL | 1 | | | | | |
| 19 | 90387–08095 | COLLAR<br>COLLERETTE | 1 | | | | | |
| 20 | 90119–08148 | BOLT, WITH WASHER<br>BOULON, AVEC RONDELLE | 1 | | | | | |
| 21 | 95380–08600 | NUT<br>ECROU | 1 | | | | | |
| 22 | 6C5–24311–00 | PIPE, FUEL 1<br>DURITE A ESSENCE | 1 | | | | | |
| 23 | 90467–10M04 | CLIP<br>JONC | 2 | | | | | |
| 24 | 6C5–24410–01 | FUEL PUMP ASSY<br>POMPE A ESSENCE | 1 | | | | | |
| 25 | 6C5–24415–00 | .BODY 4<br>.CORPS 4 | 1 | | | | | |
| 26 | 62Y–24411–03 | .DIAPHRAGM<br>.DIAPHRAGME | 1 | | | | | |
| 27 | 62Y–24423–00 | .SPRING, DIAPHRAGM<br>.RESSORT, DIAPHRAGME | 1 | | | | | |

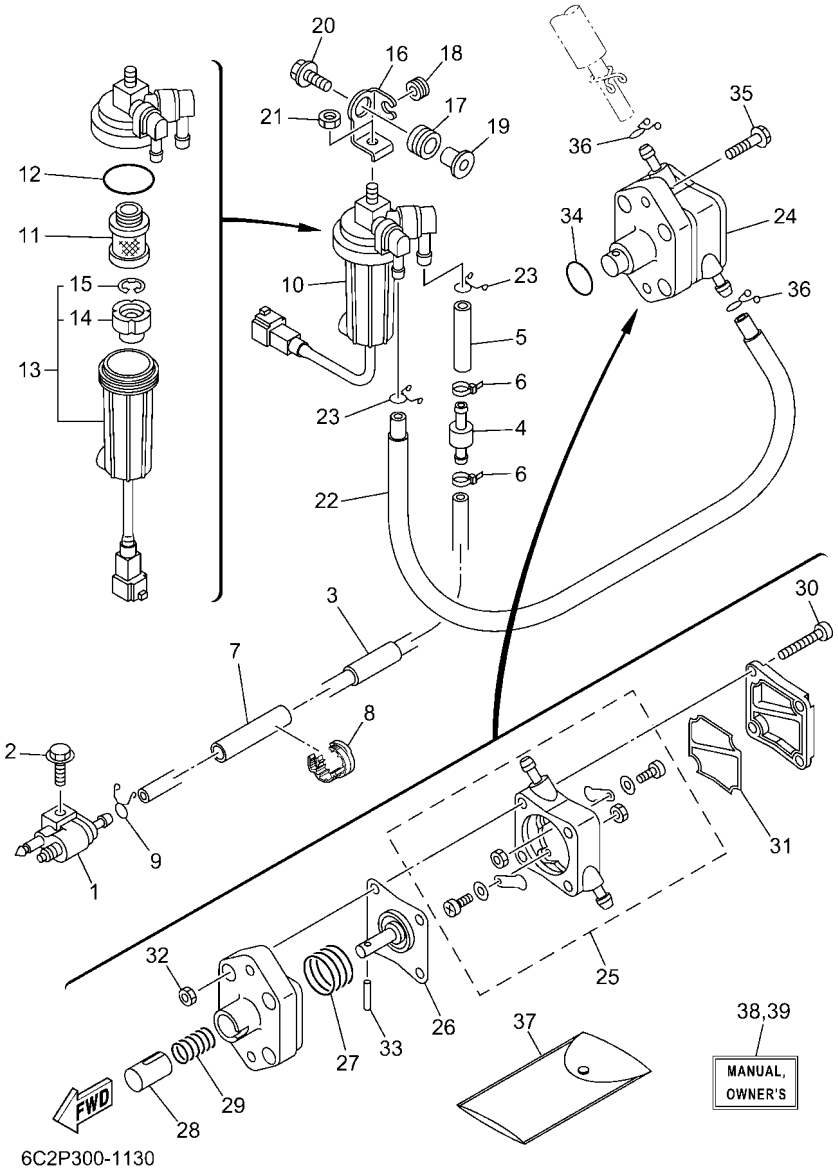


## FIG. 13 FUEL — CARBURANT

| REF. NO. | PART NO. N° PIECES | DESCRIPTION DESCRIPTION | 6C8P | | | | | REMARKS REMARQUES |
|---|---|---|---|---|---|---|---|---|
| 28 | 62Y–13131–00 | .PLUNGER<br>.PLONGEUR | 1 | | | | | |
| 29 | 62Y–24454–00 | .SPRING<br>.RESSORT | 1 | | | | | |
| 30 | 62Y–24444–01 | .SCREW<br>.VIS | 4 | | | | | |
| 31 | 6C5–24471–01 | .DIAPHRAGM<br>.DIAPHRAGME | 1 | | | | | |
| 32 | 95380–05600 | .NUT<br>.ECROU | 4 | | | | | |
| 33 | 62Y–24374–01 | .PIN<br>.PIN | 1 | | | | | |
| 34 | 93210–24M79 | O-RING<br>JOINT TORIQUE | 1 | | | | | |
| 35 | 97E95–06530 | BOLT, HEXAGON W/W DEEP RECESS<br>VIS HEXAGONAL AVC RONDELLE | 2 | | | | | |
| 36 | 90467–10M04 | CLIP<br>JONC | 2 | | | | | |
| 37 | 6C5–28100–01 | TOOL KIT<br>TROUSSE A OUTILS | 1 | | | | | AP<br>AP |
| 38 | 6C1–28199–7R–E0 | MANUAL,OWNER'S<br>MANUEL D'UTILISATION | 1 | | | | | UR (E)<br>UR (E) |
| | 6C1–28199–7R–F0 | MANUAL,OWNER'S<br>MANUEL D'UTILISATION | 1 | | | | | UR (F)<br>UR (F) |
| | 6C1–28199–7R–S0 | MANUAL,OWNER'S<br>MANUEL D'UTILISATION | 1 | | | | | UR (ES)<br>UR (ES) |
| | 6C1–28199–7R–G0 | MANUAL,OWNER'S<br>MANUEL D'UTILISATION | 1 | | | | | UR (D)<br>UR (D) |
| | 6C1–28199–7R–D0 | MANUAL,OWNER'S<br>MANUEL D'UTILISATION | 1 | | | | | UR (NL)<br>UR (NL) |
| | 6C1–28199–7R–H0 | MANUAL,OWNER'S<br>MANUEL D'UTILISATION | 1 | | | | | UR (I)<br>UR (I) |
| 39 | 6C1–28199–8R–K0 | MANUAL,OWNER'S<br>MANUEL D'UTILISATION | 1 | | | | | UR (DK)<br>UR (DK) |
| | 6C1–28199–8R–R0 | MANUAL,OWNER'S<br>MANUEL D'UTILISATION | 1 | | | | | UR (GR)<br>UR (GR) |
| | 6C1–28199–8R–P0 | MANUAL,OWNER'S<br>MANUEL D'UTILISATION | 1 | | | | | UR (P)<br>UR (P) |
| | 6C1–28199–8R–N0 | MANUAL,OWNER'S<br>MANUEL D'UTILISATION | 1 | | | | | UR (N)<br>UR (N) |
| | 6C1–28199–8R–M0 | MANUAL,OWNER'S<br>MANUEL D'UTILISATION | 1 | | | | | UR (S)<br>UR (S) |
| | 6C1–28199–8R–L0 | MANUAL,OWNER'S<br>MANUEL D'UTILISATION | 1 | | | | | UR (SF)<br>UR (SF) |

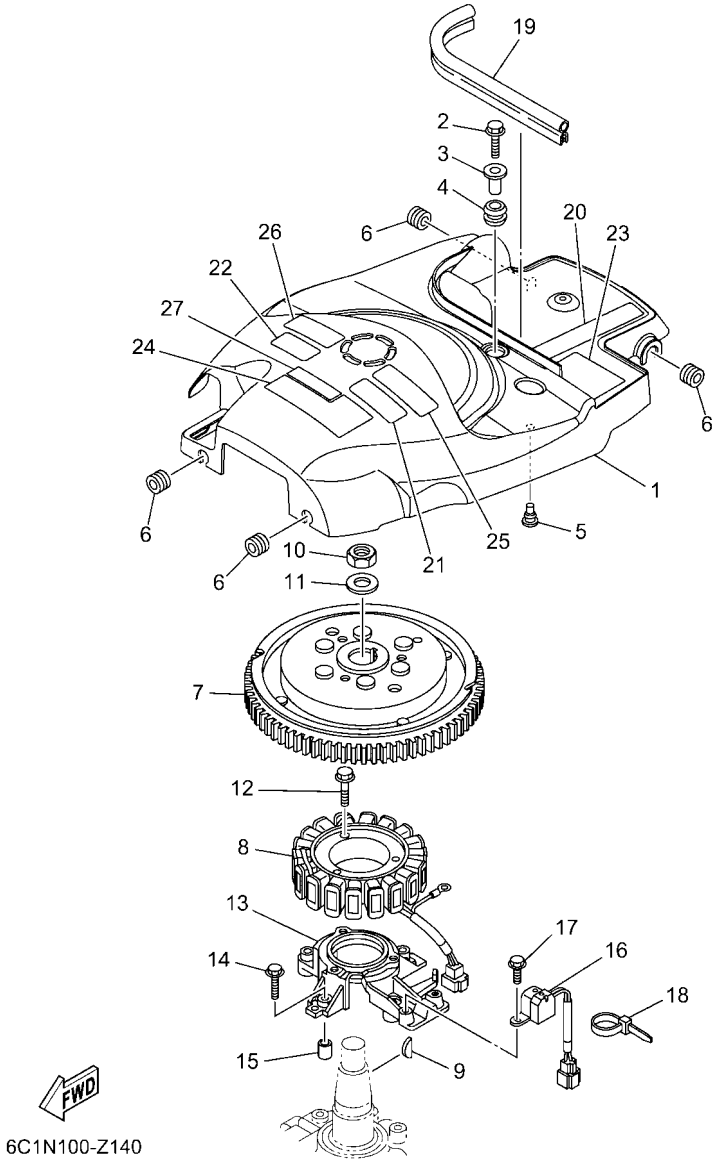


## FIG. 14 GENERATOR — GENERATRICE

| REF. NO. | PART NO. N° PIECES | DESCRIPTION DESCRIPTION | 6C8P | | | | | REMARKS REMARQUES |
|---|---|---|---|---|---|---|---|---|
| 1 | 6C5–81337–11 | COVER, FLYWHEEL<br>COUVERCLE, VOLANT | 1 | | | | | |
| 2 | 95D95–06020 | BOLT, FLANGE DEEP RECESS<br>BOULON FIXATION | 1 | | | | | |
| 3 | 90387–06285 | COLLAR<br>COLLERETTE | 1 | | | | | |
| 4 | 90480–15M31 | GROMMET<br>PASSE-FIL | 1 | | | | | |
| 5 | 90480–06M19 | GROMMET<br>PASSE-FIL | 1 | | | | | |
| 6 | 90480–12314 | GROMMET<br>PASSE-FIL | 4 | | | | | |
| 7 | 6C5–81450–01 | ROTOR ASSY<br>ROTOR COMPLET | 1 | | | | | |
| 8 | 6C5–81410–02 | STATOR ASSY<br>STATOR COMPLET | 1 | | | | | |
| 9 | 6H4–11545–00 | KEY, WOODRUFF<br>CLAVETTE, DEMI-LUNE | 1 | | | | | |
| 10 | 90170–20137 | NUT<br>ECROU | 1 | | | | | |
| 11 | 90201–21M18 | WASHER, PLATE<br>RONDELLE, PLATE | 1 | | | | | |
| 12 | 95023–06030 | BOLT<br>BOULON, A COLLERETTE | 3 | | | | | |
| 13 | 6C5–85561–01 | BASE, MAGNETO<br>BASE, MAGNETO | 1 | | | | | |
| 14 | 95023–06030 | BOLT<br>BOULON, A COLLERETTE | 4 | | | | | |
| 15 | 99530–08012 | PIN, DOWEL<br>GOUJON, D'ASSEMBLAGE | 2 | | | | | |
| 16 | 62Y–85580–00 | COIL, PULSER<br>BOBINE, PULSEUR | 1 | | | | | |
| 17 | 97595–05512 | BOLT, WITH WASHER<br>VIS HEXAGONAL AVC RONDELLE | 2 | | | | | |
| 18 | 90465–13M97 | CLAMP<br>BRIDE | 1 | | | | | |
| 19 | 6CB–42617–00 | DAMPER, FORM<br>BOURRELET, CAOUTCHOUC | 1 | | | | | |
| 20 | 6C5–13437–64 | MARK, CAUTION<br>MAKER | 1 | | | | | |
| 21 | 6EE–81995–41 | LABEL, WARNING<br>ETIQUETTE, AVERTISSEMENT | 1 | | | | | |
| 22 | 6EE–81995–51 | LABEL, WARNING<br>ETIQUETTE, AVERTISSEMENT | 1 | | | | | |
| 23 | 62Y–83626–00 | MARK 6<br>MARK 6 | 1 | | | | | |
| 24 | 6C5–81919–10 | GRAPHIC, REGULATOR<br>ADHESIF, REGULATEUR | 1 | | | | | |
| 25 | 6EE–81994–41 | LABEL, SAFETY<br>ETIQUETTE, SECURITE | 1 | | | | | |
| 26 | 6EE–81994–51 | LABEL, SAFETY<br>ETIQUETTE, SECURITE | 1 | | | | | |
| 27 | 6AG–81996–01 | MARK<br>MARQUE | 1 | | | | | |

## FIG. 15 ELECTRICAL 1 — PARTIE ELECTRIQUE 1

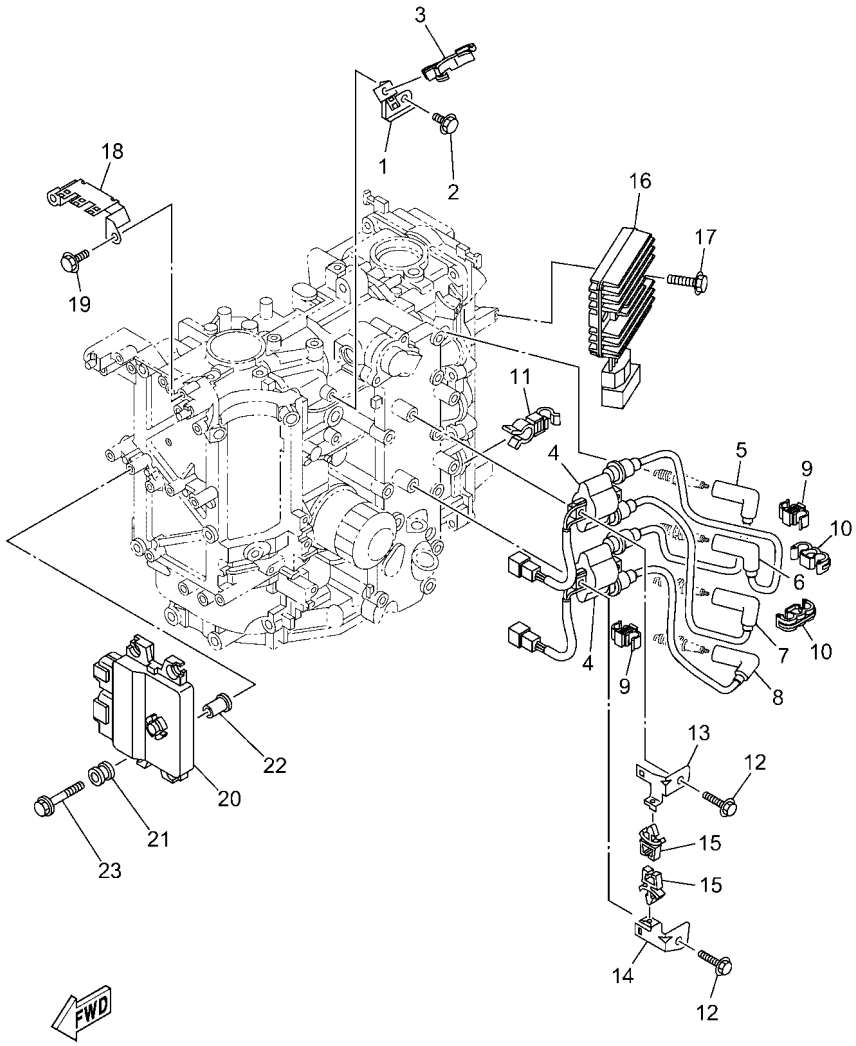


6C1M110-Y140

| REF. NO. | PART NO. N° PIECES | DESCRIPTION DESCRIPTION | 6C8P | | | | | REMARKS REMARQUES |
|---|---|---|---|---|---|---|---|---|
| 1 | 6C5–85525–00 | PLATE<br>PLAQUE | 1 | | | | | |
| 2 | 97E95–06514 | BOLT, HEXAGON W/W DEEP RECESS<br>VIS HEXAGONAL AVC RONDELLE | 1 | | | | | |
| 3 | 90464–18246 | CLAMP<br>BRIDE | 1 | | | | | |
| 4 | 63P–82310–01 | IGNITION COIL ASSY<br>BOBINE D'ALLUMAGE | 2 | | | | | |
| 5 | 6C5–82340–10 | HIGH TENSION CORD ASSY 1<br>CABLE HAUTE TENSION 1 | 1 | | | | | |
| 6 | 6C5–82340–20 | HIGH TENSION CORD ASSY 2<br>CABLE HAUTE TENSION 2 | 1 | | | | | |
| 7 | 6C5–82340–30 | HIGH TENSION CORD ASSY 3<br>CABLE HAUTE TENSION 3 | 1 | | | | | |
| 8 | 6C5–82340–40 | HIGH TENSION CORD ASSY 4<br>CABLE HAUTE TENSION 4 | 1 | | | | | |
| 9 | 90464–07019 | CLAMP<br>BRIDE | 2 | | | | | |
| 10 | 90464–07020 | CLAMP<br>BRIDE | 2 | | | | | |
| 11 | 90464–13013 | CLAMP<br>BRIDE | 1 | | | | | |
| 12 | 97E95–06525 | BOLT, HEXAGON W/W DEEP RECESS<br>VIS HEXAGONAL AVC RONDELLE | 4 | | | | | |
| 13 | 6C5–82316–01 | BRACKET, IGNITION COIL<br>SUPPORT, BOBINE D'ALLUMAGE | 1 | | | | | |
| 14 | 6C5–82316–11 | BRACKET, IGNITION COIL<br>SUPPORT, BOBINE D'ALLUMAGE | 1 | | | | | |
| 15 | 90464–06001 | CLAMP<br>BRIDE | 2 | | | | | |
| 16 | 68V–81960–10 | RECTIFIER & REGULATOR ASSY<br>REDRESSEUR REGULATEUR CPLT | 1 | | | | | |
| 17 | 97E95–06525 | BOLT, HEXAGON W/W DEEP RECESS<br>VIS HEXAGONAL AVC RONDELLE | 2 | | | | | |
| 18 | 6C5–82171–00 | STAY, FUSE BOX<br>SUPPORT, BOITE A FUSIBLES | 1 | | | | | |
| 19 | 97E95–06514 | BOLT, HEXAGON W/W DEEP RECESS<br>VIS HEXAGONAL AVC RONDELLE | 2 | | | | | |
| 20 | 6C5–8591A–60 | ENGINE CONTROL UNIT ASSY<br>BLOC DE CONTROL | 1 | | | | | |
| 21 | 6C5–82317–01 | DAMPER, IGNITION COIL<br>AMORTISSEUR, BOBINE D'ALLUM | 4 | | | | | |
| 22 | 90387–06119 | COLLAR<br>COLLERETTE | 4 | | | | | |
| 23 | 90119–06289 | BOLT, WITH WASHER<br>BOULON, AVEC RONDELLE | 4 | | | | | |

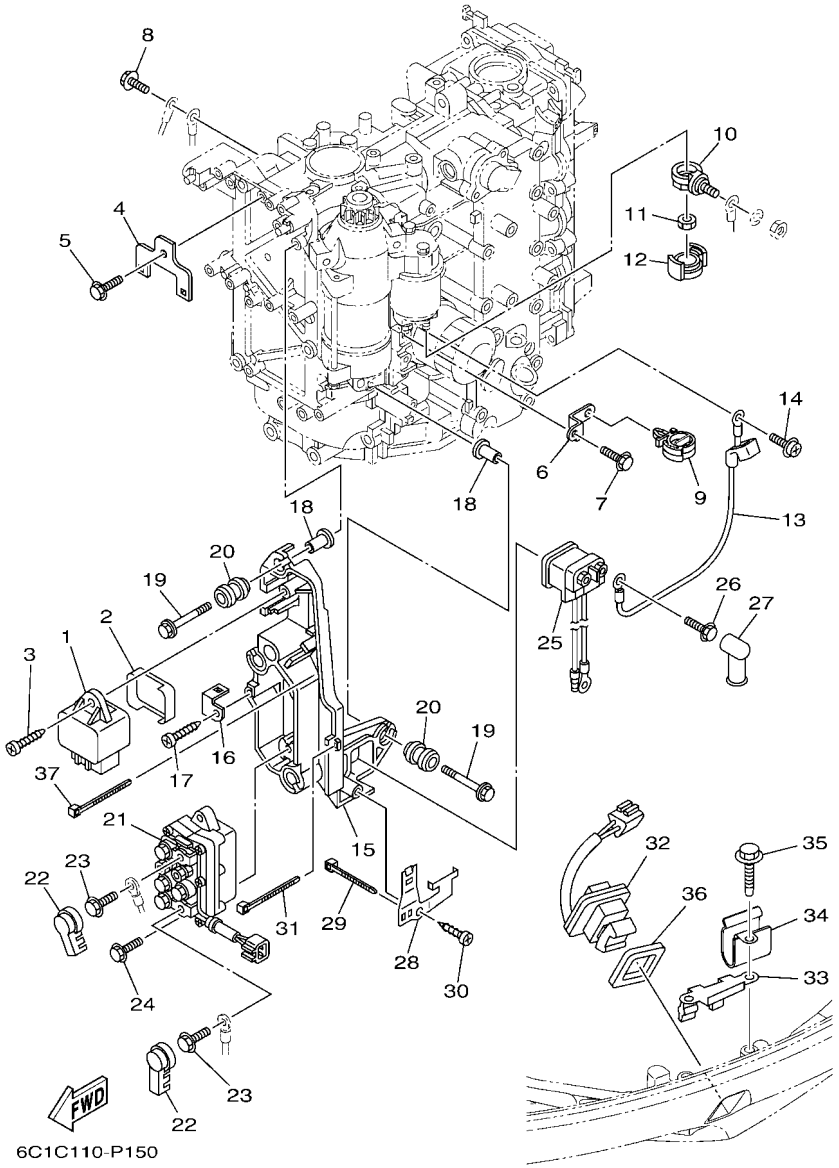


## FIG. 16 ELECTRICAL 2 — PARTIE ELECTRIQUE 2

| REF. NO. | PART NO. N° PIECES | DESCRIPTION DESCRIPTION | 6C8P | | | | | REMARKS REMARQUES |
|---|---|---|---|---|---|---|---|---|
| 1 | 60E–81950–00 | RELAY ASSY<br>RELAIS COMPLET | 1 | | | | | |
| 2 | 6C5–81336–01 | GROMMET<br>OEILLET CAOUTCHOUC | 1 | | | | | |
| 3 | 97780–60620 | SCREW, TAPPING<br>VIS, TETE BOMBEE | 1 | | | | | |
| 4 | 6C5–8257V–00 | PLATE, CONNECTOR<br>PLAQUE, CONNECTEUR | 1 | | | | | |
| 5 | 97E95–06514 | BOLT, HEXAGON W/W DEEP RECESS<br>VIS HEXAGONAL AVC RONDELLE | 1 | | | | | |
| 6 | 6C5–85525–10 | PLATE<br>PLAQUE | 1 | | | | | |
| 7 | 97E95–06620 | BOLT, HEXAGON W/W DEEP RECESS<br>VIS HEXAGONAL AVC RONDELLE | 3 | | | | | |
| 8 | 97E95–06620 | BOLT, HEXAGON W/W DEEP RECESS<br>VIS HEXAGONAL AVC RONDELLE | 1 | | | | | |
| 9 | 90464–12183 | CLAMP<br>BRIDE | 1 | | | | | |
| 10 | 60V–81925–00 | TERMINAL<br>BORNE | 1 | | | | | |
| 11 | 90179–08003 | NUT<br>ECROU | 1 | | | | | |
| 12 | 68F–82582–00 | CAP,1<br>COUVERCLE 1 | 1 | | | | | |
| 13 | 6C5–81815–00 | CORD, STARTER MOTOR<br>FIL, DEMARREUR ELECTRIQUE | 1 | | | | | |
| 14 | 90159–04005 | SCREW, WITH WASHER<br>VIS, AVEC RONDELLE | 1 | | | | | |
| 15 | 6C5–81948–00 | BRACKET<br>SUPPORT | 1 | | | | | |
| 16 | 6C5–85548–01 | HOLDER<br>SUPPORT | 1 | | | | | |
| 17 | 97780–60620 | SCREW, TAPPING<br>VIS, TETE BOMBEE | 1 | | | | | |
| 18 | 90387–06119 | COLLAR<br>COLLERETTE | 4 | | | | | |
| 19 | 90119–06289 | BOLT, WITH WASHER<br>BOULON, AVEC RONDELLE | 4 | | | | | |
| 20 | 6A0–82317–01 | DAMPER, IGNITION COIL<br>AMORTISSEUR, BOBINE D'ALLUM | 4 | | | | | |
| 21 | 63P–W8195–00 | RELAY ASSY<br>RELAIS COMPLET | 1 | | | | | |
| 22 | 6P2–8183X–00 | CAP, TERMINAL<br>COUVERCLE, BORNE | 2 | | | | | |
| 23 | 97E95–06610 | BOLT, HEXAGON W/W DEEP RECESS<br>VIS HEXAGONAL AVC RONDELLE | 2 | | | | | |
| 24 | 97E95–06520 | BOLT, HEXAGON W/W DEEP RECESS<br>VIS HEXAGONAL AVC RONDELLE | 2 | | | | | |
| 25 | 68V–8194A–00 | RELAY<br>RELAIS | 1 | | | | | |
| 26 | 97E95–06610 | BOLT, HEXAGON W/W DEEP RECESS<br>VIS HEXAGONAL AVC RONDELLE | 2 | | | | | |
| 27 | 6G5–82119–00 | COVER, LEAD WIRE<br>GARNITURE, FIL | 2 | | | | | |

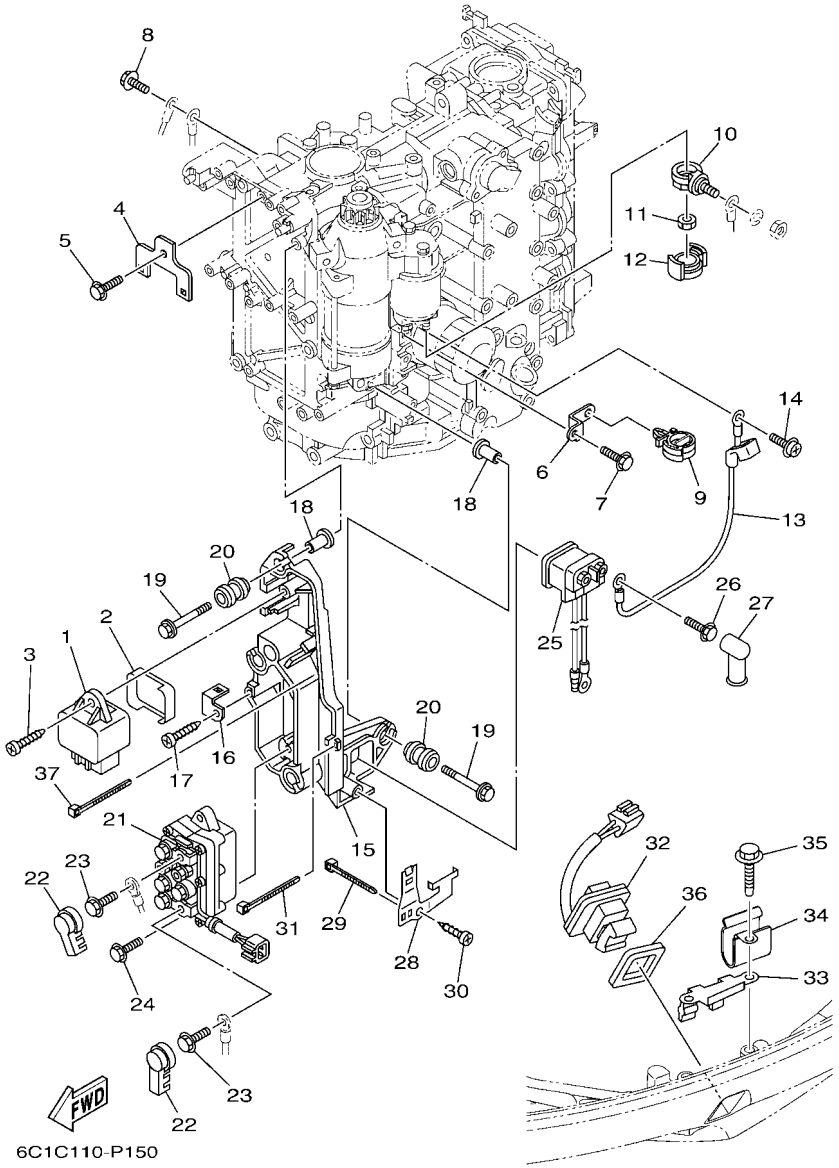


## FIG. 16 ELECTRICAL 2 — PARTIE ELECTRIQUE 2

| REF. NO. | PART NO. N° PIECES | DESCRIPTION DESCRIPTION | 6C8P | | | | | REMARKS REMARQUES |
|---|---|---|---|---|---|---|---|---|
| 28 | 6C5–81953–00 | STAY, RELAY<br>SUPPORT, RELAIS | 1 | | | | | |
| 29 | 90465–11M10 | CLAMP<br>BRIDE | 1 | | | | | |
| 30 | 97780–60620 | SCREW, TAPPING<br>VIS, TETE BOMBEE | 1 | | | | | |
| 31 | 90465–13M97 | CLAMP<br>BRIDE | 1 | | | | | |
| 32 | 69J–82563–01 | TRIM & TILT SWITCH ASSY<br>INCLINER ET PARER COMMUTATEUR | 1 | | | | | |
| 33 | 6BG–83614–00 | BRACKET<br>SUPPORT | 1 | | | | | |
| 34 | 90465–08M89 | CLAMP<br>BRIDE | 1 | | | | | |
| 35 | 90109–06316 | BOLT<br>BOULON | 2 | | | | | |
| 36 | 69J–82587–01 | GASKET<br>JOINT | 1 | | | | | |
| 37 | 90465–13M97 | CLAMP<br>BRIDE | 2 | | | | | |

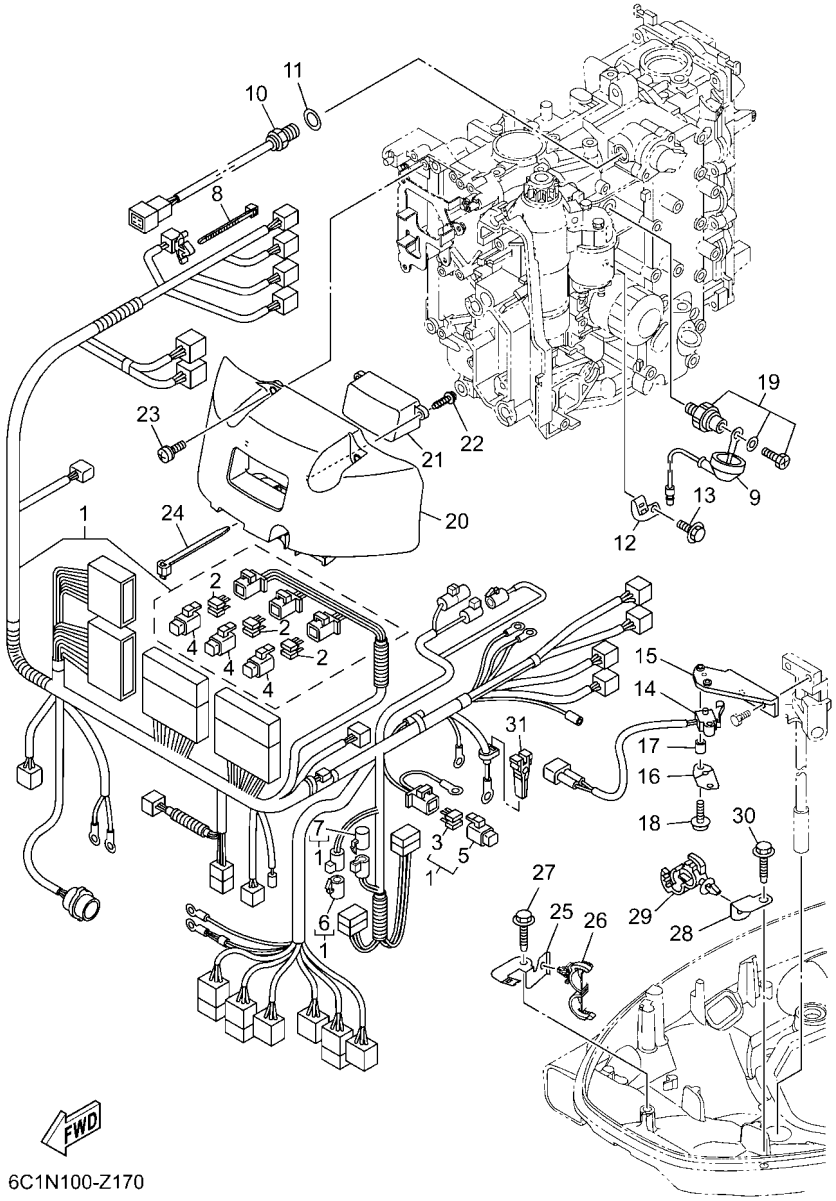


6C1N100-Z170

## FIG. 17 ELECTRICAL 3 — PARTIE ELECTRIQUE 3

| REF. NO. | PART NO. N° PIECES | DESCRIPTION DESCRIPTION | 6C8P | | | | | REMARKS REMARQUES |
|---|---|---|---|---|---|---|---|---|
| 1 | 6C5–82590–H0 | WIRE HARNESS ASSY<br>FAISCEAU DE FILS COMPLET | 1 | | | | | |
| 2 | 67F–82151–00 | .FUSE (20A)<br>.FUSIBLE (20A) | 6 | | | | | |
| 3 | 67F–82151–10 | .FUSE (30A)<br>.FUSIBLE (30A) | 2 | | | | | |
| 4 | 67F–8215B–10 | .CAP (YELLOW)<br>.BOUCHON (YELLOW) | 3 | | | | | |
| 5 | 67F–8215B–20 | .CAP (GREEN)<br>.BOUCHON (GREEN) | 1 | | | | | |
| 6 | 6DA–82582–00 | .CAP 1 (FEMALE)<br>.BOUCHON 1 (FEMME) | 1 | | | | | |
| 7 | 6DA–82582–10 | .CAP 1 (MALE)<br>.BOUCHON 1 (MALE) | 1 | | | | | |
| 8 | 90465–13M11 | CLAMP<br>BRIDE | 1 | | | | | |
| 9 | 68V–81315–01 | LEAD WIRE ASSY<br>FIL | 1 | | | | | |
| 10 | 6CJ–85790–00 | THERMOSENSOR ASSY<br>SENSITOMETRE | 1 | | | | | |
| 11 | 90430–14115 | GASKET<br>JOINT | 1 | | | | | |
| 12 | 6C5–82388–10 | PLATE<br>PLAQUETTE | 1 | | | | | |
| 13 | 97E95–06514 | BOLT, HEXAGON W/W DEEP RECESS<br>VIS HEXAGONAL AVC RONDELLE | 1 | | | | | |
| 14 | 60V–8259F–01 | SWITCH ASSY<br>COMMUTATEUR | 1 | | | | | |
| 15 | 6CJ–82554–00 | STAY, NEUTRAL SWITCH<br>SUPPORT, CONT DE POINT-MORT | 1 | | | | | |
| 16 | 61A–82588–01 | PLATE<br>PLAQUE | 1 | | | | | |
| 17 | 90387–04001 | COLLAR<br>COLLERETTE | 1 | | | | | |
| 18 | 97985–04116 | SCREW, WITH WASHER<br>VIS, AVEC RONDELLE | 2 | | | | | |
| 19 | 64J–82504–00 | OIL PRESSURE SWITCH ASSY<br>CONTACTEUR DE PRESSION D'HUILE | 1 | | | | | |
| 20 | 6C5–81942–10 | COVER<br>COUVERCLE | 1 | | | | | |
| 21 | 6CJ–83559–00 | COVER, METER<br>COUVERCLE, COMPTEUR | 1 | | | | | |
| 22 | 90167–05009 | SCREW, TAPPING<br>VIS, TETE FRAISEE | 2 | | | | | |
| 23 | 90159–06M03 | SCREW, WITH WASHER<br>VIS, AVEC RONDELLE | 4 | | | | | |
| 24 | 90465–13M24 | CLAMP<br>BRIDE | 1 | | | | | |
| 25 | 6BG–42811–01 | STAY<br>SUPPORT | 1 | | | | | |
| 26 | 90464–18205 | CLAMP<br>BRIDE | 1 | | | | | |
| 27 | 90109–06316 | BOLT<br>BOULON | 1 | | | | | |

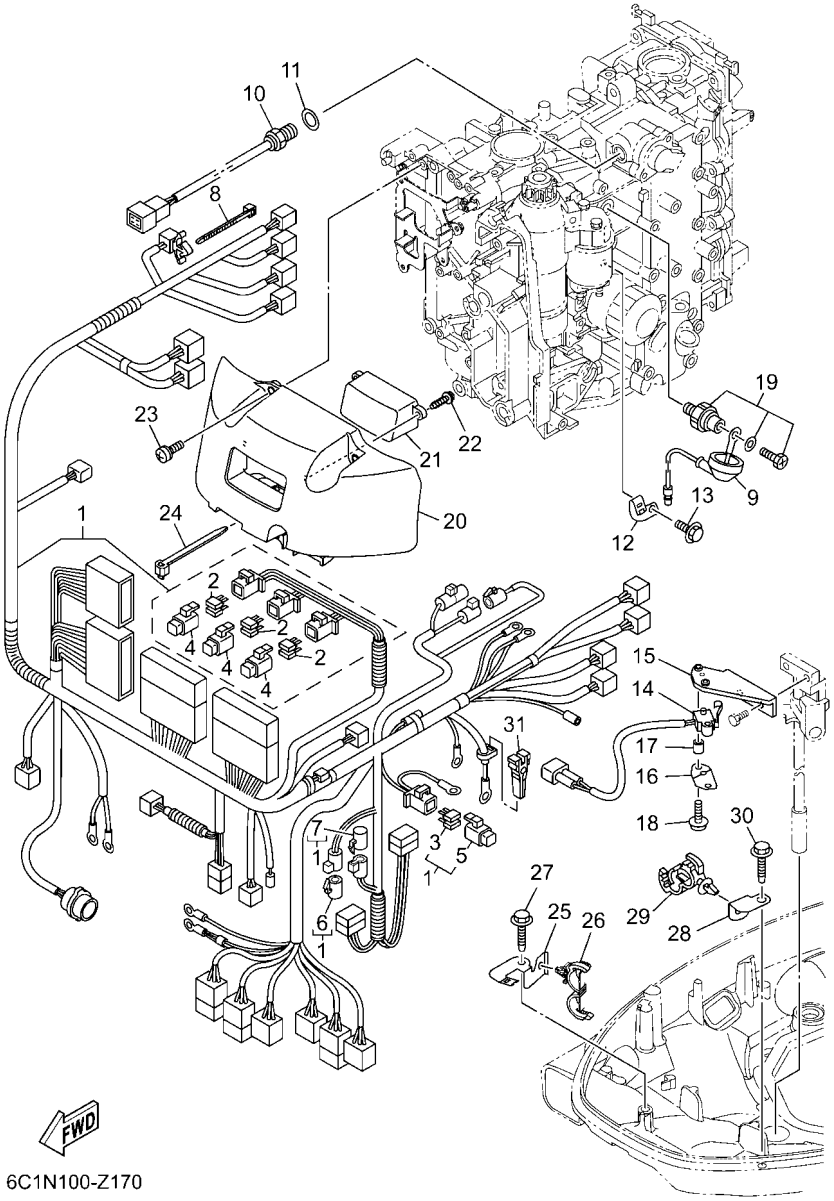


6C1N100-Z170

## FIG. 17 ELECTRICAL 3 — PARTIE ELECTRIQUE 3

| REF. NO. | PART NO. N° PIECES | DESCRIPTION DESCRIPTION | 6C8P | | | | | REMARKS REMARQUES |
|---|---|---|---|---|---|---|---|---|
| 28 | 63P–42756–00 | STAY, CLAMP<br>SUPPORT, COLLIER | 1 | | | | | |
| 29 | 90464–12183 | CLAMP<br>BRIDE | 1 | | | | | |
| 30 | 90109–06316 | BOLT<br>BOULON | 1 | | | | | |
| 31 | 67F–2812A–00 | PULLER, FUSE<br>TENDEUR, FUSIBLE | 1 | | | | | |

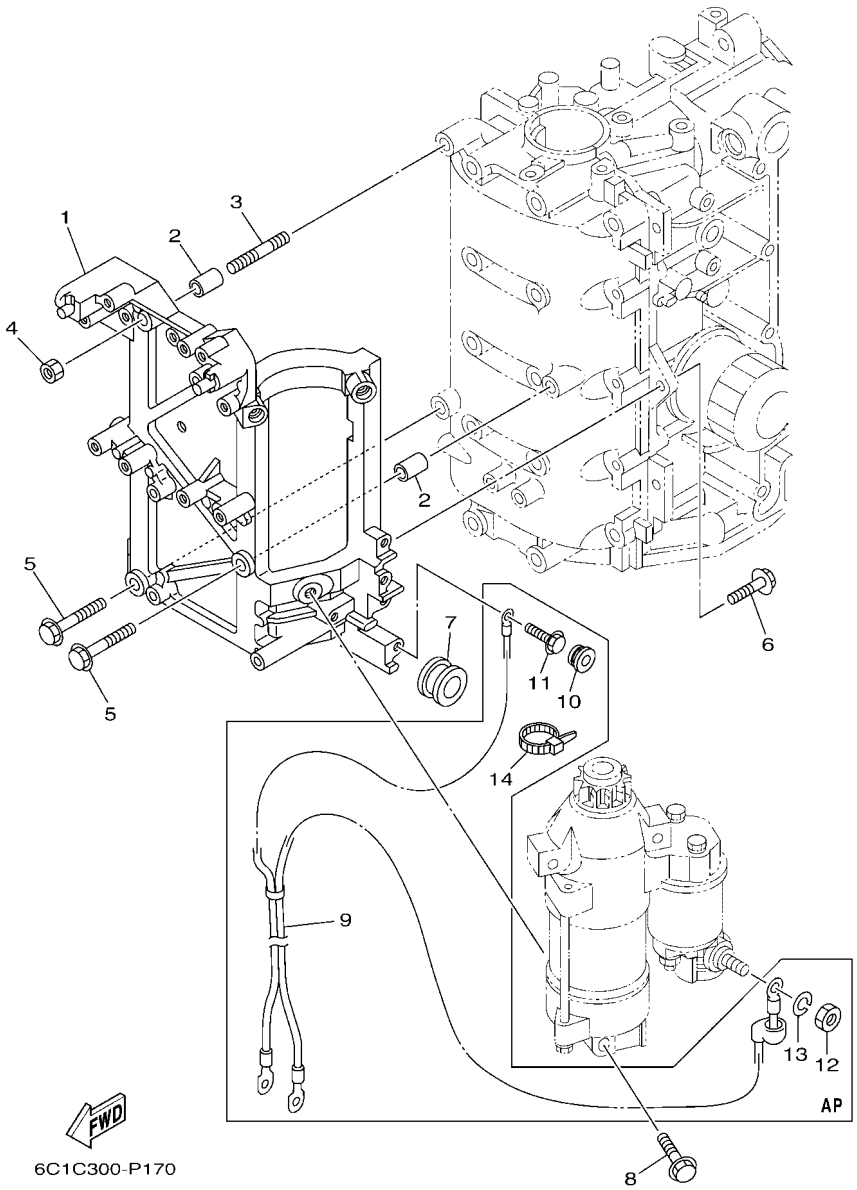


## FIG. 18 ELECTRICAL 4 — PARTIE ELECTRIQUE 4

| REF. NO. | PART NO. N° PIECES | DESCRIPTION DESCRIPTION | 6C8P | | | | | REMARKS REMARQUES |
|---|---|---|---|---|---|---|---|---|
| 1 | 6C5–81822–00 | BRACKET, STARTING MOTOR<br>SUPPORT, DEMARREUR ELECTRIQUE | 1 | | | | | |
| 2 | 99530–10114 | PIN, DOWEL<br>GOUJON, D'ASSEMBLAGE | 2 | | | | | |
| 3 | 95680–08330 | BOLT, STUD<br>GOUJON | 1 | | | | | |
| 4 | 95380–08600 | NUT<br>ECROU | 1 | | | | | |
| 5 | 97E95–08535 | BOLT, HEXAGON W/W DEEP RECESS<br>VIS HEXAGONAL AVC RONDELLE | 2 | | | | | |
| 6 | 97E95–08525 | BOLT, HEXAGON W/W DEEP RECESS<br>VIS HEXAGONAL AVC RONDELLE | 2 | | | | | |
| 7 | 90480–24003 | GROMMET<br>PASSE-FIL | 1 | | | | | |
| 8 | 97513–08545 | BOLT, WITH WASHER<br>VIS HEXAGONAL AVC RONDELLE | 3 | | | | | |
| 9 | 6C5–82105–U2 | BATTERY CABLE<br>CABLE DE BATTERIE | 1 | | | | | AP<br>AP |
| 10 | 90480–12072 | GROMMET<br>PASSE-FIL | 1 | | | | | AP<br>AP |
| 11 | 97E95–06620 | BOLT, HEXAGON W/W DEEP RECESS<br>VIS HEXAGONAL AVC RONDELLE | 1 | | | | | AP<br>AP |
| 12 | 95333–08600 | NUT<br>ECROU | 1 | | | | | AP<br>AP |
| 13 | 92903–08100 | WASHER, SPRING<br>RONDELLE, GROWER | 1 | | | | | AP<br>AP |
| 14 | 90465–13M18 | CLAMP<br>BRIDE | 1 | | | | | AP<br>AP |

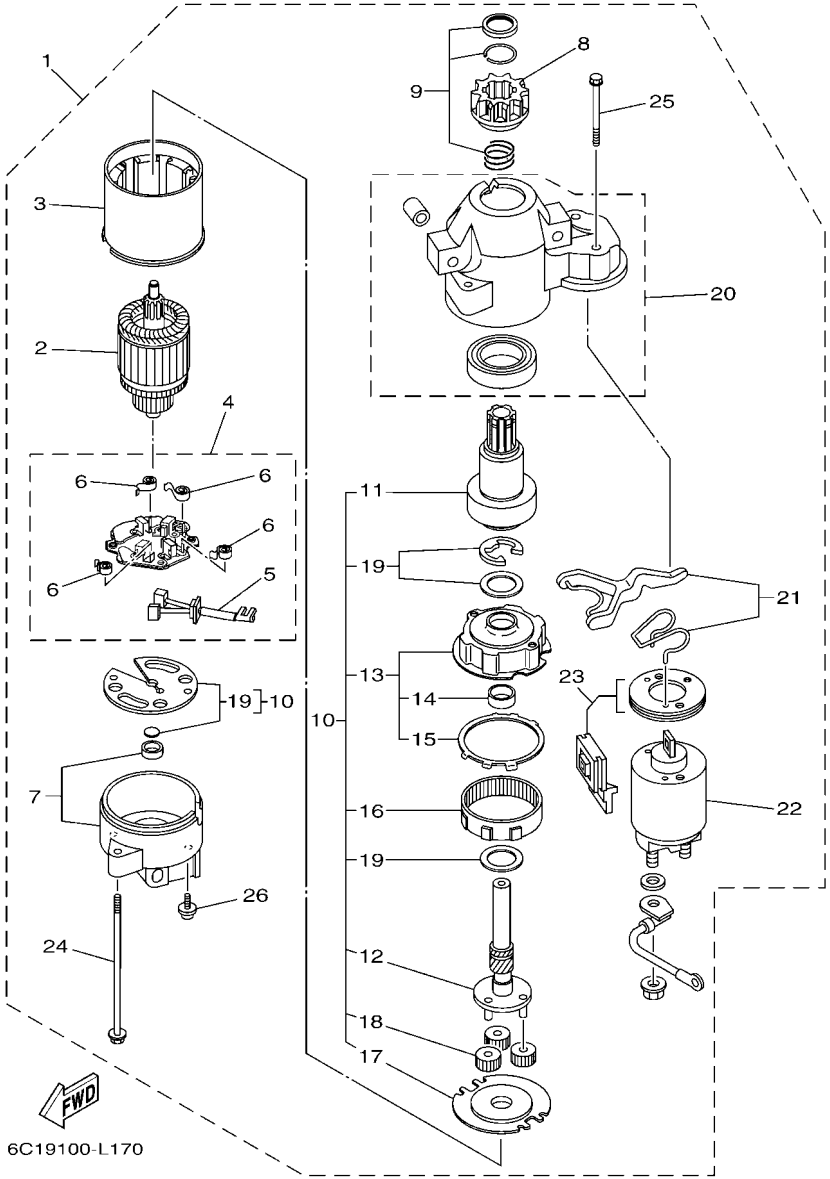


## FIG. 19 STARTING MOTOR — DEMARREUR ELECTRIQUE

| REF. NO. | PART NO. N° PIECES | DESCRIPTION DESCRIPTION | 6C8P | | | | | REMARKS REMARQUES |
|---|---|---|---|---|---|---|---|---|
| 1 | 6CJ–81800–01 | STARTING MOTOR ASSY<br>DEMARREUR ELECTRIQUE COMPLET | 1 | | | | | |
| 2 | 67F–81850–00 | .ARMATURE ASSY<br>.INDUIT | 1 | | | | | |
| 3 | 67F–81810–00 | .STATOR ASSY<br>.STATOR COMPLET | 1 | | | | | |
| 4 | 69J–81840–11 | .BRUSH HOLDER ASSY<br>.SUPPORT DE CHARBON | 1 | | | | | |
| 5 | 69J–81801–11 | ..BRUSH SET<br>..JEU DE BROSSE | 1 | | | | | |
| 6 | 67F–81813–00 | ..SPRING, BRUSH<br>..RESSORT, DE CHARBON | 4 | | | | | |
| 7 | 68F–81820–00 | .REAR BRACKET ASSY<br>.SUPPORT ARRIERE COMPLET | 1 | | | | | |
| 8 | 67F–81808–00 | .PINION ASSY<br>.PIGNON | 1 | | | | | |
| 9 | 67F–81857–00 | .PINION STOPPER SET<br>.BUTEE PIGNON | 1 | | | | | |
| 10 | 67F–81807–00 | .GEAR ASSY, STARTING MOTOR<br>.PIGNON, DEMARREUR ELECTRIQUE | 1 | | | | | |
| 11 | 67F–81832–00 | ..CLUTCH, OVER RUN<br>..EMBRAYAGE, ROUE LIBRE | 1 | | | | | |
| 12 | 67F–81836–00 | ..SHAFT, PINION<br>..AXE, PIGNON | 1 | | | | | |
| 13 | 67F–81821–00 | ..BRACKET, CENTER 1<br>..SUPPORT, CENTRE 1 | 1 | | | | | |
| 14 | 67F–81841–00 | ...BEARING<br>...ROULEMENT | 1 | | | | | |
| 15 | 67F–8183R–00 | ...GASKET<br>...JOINT | 1 | | | | | |
| 16 | 67F–81891–00 | ..GEAR, RING<br>..ROUE DENTEE | 1 | | | | | WITH 67F-8183R-00<br>WITH 67F-8183R-00 |
| 17 | 67F–81830–00 | ..BRACKET, CENTER 2<br>..SUPPORT, CENTRE 2 | 1 | | | | | |
| 18 | 60V–8183T–00 | ..GEAR, IDLER<br>..PIGNON, INTERMEDIAIRE | 3 | | | | | |
| 19 | 67F–81809–00 | ..WASHER KIT<br>..JEU DE RONDELLES | 1 | | | | | |
| 20 | 60X–81842–00 | .COVER<br>.COUVERCLE | 1 | | | | | |
| 21 | 6C5–81839–00 | .LEVER ASSY<br>.LEVIER COMPLET | 1 | | | | | |
| 22 | 6C5–81941–00 | .STARTER RELAY ASSY<br>.LANCEUR RELAIS (ENS.) | 1 | | | | | |
| 23 | 6C5–81869–00 | .COVER, DUST<br>.COUVERCLE, POUSSIERE | 1 | | | | | |
| 24 | 6K7–81826–11 | .BOLT<br>.BOULON | 2 | | | | | |
| 25 | 69J–81828–00 | .BOLT 2<br>.BOULON 2 | 2 | | | | | |
| 26 | 67F–81846–00 | .SCREW<br>.VIS | 2 | | | | | |

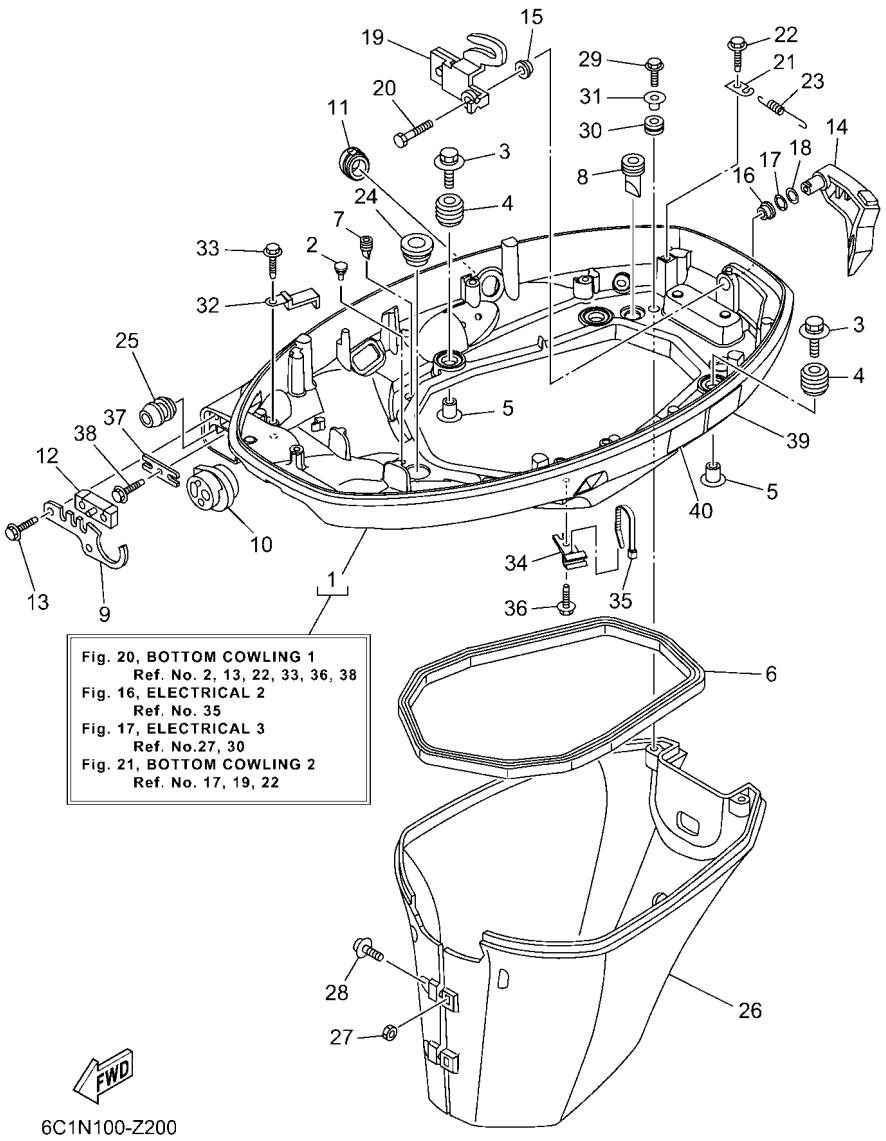


## FIG. 20 BOTTOM COWLING 1 — CAPOT INFERIEUR 1

| REF. NO. | PART NO. N° PIECES | DESCRIPTION DESCRIPTION | 6C8P | | | | | REMARKS REMARQUES |
|---|---|---|---|---|---|---|---|---|
| 1 | 6CJ–42710–03–8D | BOTTOM COWLING ASSY<br>ENS. EMBASE | 1 | | | | | |
| 2 | 6H4–42748–01 | GROMMET<br>PASSE-FIL | 3 | | | | | |
| 3 | 90119–06291 | BOLT, WITH WASHER<br>BOULON, AVEC RONDELLE | 4 | | | | | |
| 4 | 6BG–42748–01 | GROMMET<br>PASSE-FIL | 4 | | | | | |
| 5 | 90387–06M69 | COLLAR<br>COLLERETTE | 4 | | | | | |
| 6 | 62Y–42716–01 | RUBBER SEAL 1<br>JOINT EN CAOUTCHOUC 1 | 1 | | | | | |
| 7 | 65W–42717–00 | RUBBER, SEAL 2<br>JOINT EN CAOUTCHOUC 2 | 2 | | | | | |
| 8 | 61A–42717–00 | RUBBER, SEAL 2<br>JOINT EN CAOUTCHOUC 2 | 2 | | | | | |
| 9 | 6BG–42761–00 | STOPPER<br>PLAQUETTE | 1 | | | | | |
| 10 | 6CJ–42725–01 | GROMMET<br>PASSE-FIL | 1 | | | | | |
| 11 | 6CJ–42726–10 | GROMMET<br>PASSE-FIL | 1 | | | | | |
| 12 | 6BG–42727–01 | GROMMET<br>PASSE-FIL | 1 | | | | | |
| 13 | 90109–06316 | BOLT<br>BOULON | 2 | | | | | |
| 14 | 6BG–42815–00–8D | LEVER, CLAMP 1<br>LEVIER, PRESSE 1 | 1 | | | | | |
| 15 | 90386–12M37 | BUSH<br>DOUILLE | 1 | | | | | |
| 16 | 90386–12MA2 | BUSH<br>DOUILLE | 1 | | | | | |
| 17 | 90206–12052 | WASHER, WAVE<br>RONDELLE, ONDULEE | 1 | | | | | |
| 18 | 90201–12M07 | WASHER, PLATE<br>RONDELLE, PLATE | 1 | | | | | |
| 19 | 6BG–42816–00 | LEVER, CLAMP 2<br>LEVIER, PRESSE 2 | 1 | | | | | |
| 20 | 97D95–06014 | BOLT, HEXAGON DEEP RECESS<br>VIS HEXAGONAL | 1 | | | | | |
| 21 | 66T–43144–00 | HOOK, SPRING<br>CROCHET | 1 | | | | | |
| 22 | 90109–06316 | BOLT<br>BOULON | 1 | | | | | |
| 23 | 90506–18023 | SPRING, TENSION<br>RESSORT, TENSION | 1 | | | | | |
| 24 | 68U–42727–01 | GROMMET<br>PASSE-FIL | 1 | | | | | |
| 25 | 6BG–24329–01 | SEAL<br>JOINT | 1 | | | | | |
| 26 | 6BG–42741–10–8D | APRON, 1<br>CAPOT LATERAL 1 | 1 | | | | | |
| 27 | 95380–06600 | NUT, HEXAGON<br>ECROU | 2 | | | | | |

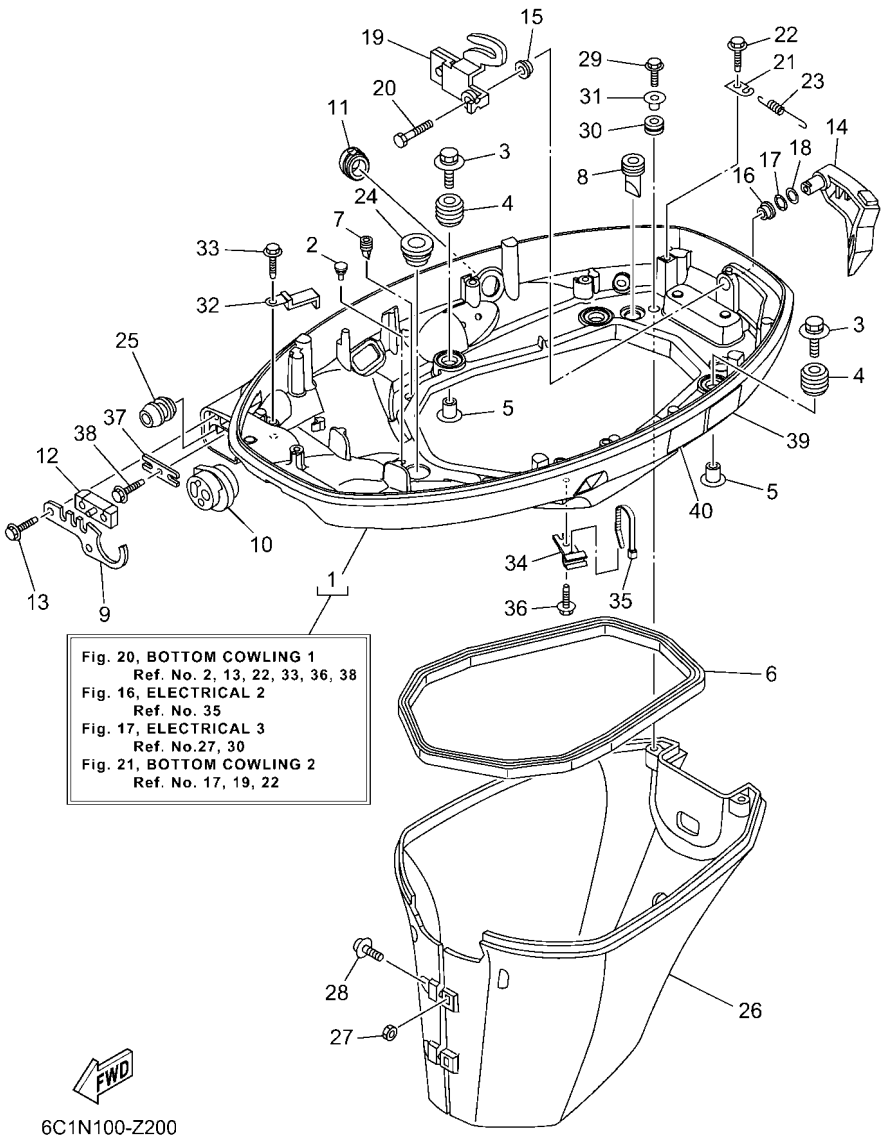


## FIG. 20 BOTTOM COWLING 1 — CAPOT INFERIEUR 1

| REF. NO. | PART NO. N° PIECES | DESCRIPTION DESCRIPTION | 6C8P | | | | | REMARKS REMARQUES |
|---|---|---|---|---|---|---|---|---|
| 28 | 97980–06325 | SCREW, WITH WASHER<br>VIS, AVEC RONDELLE | 2 | | | | | |
| 29 | 90109–06M80 | BOLT<br>BOULON | 2 | | | | | |
| 30 | 90480–13M24 | GROMMET<br>PASSE-FIL | 2 | | | | | |
| 31 | 90387–06M43 | COLLAR<br>COLLERETTE | 2 | | | | | |
| 32 | 90462–20005 | CLAMP<br>BRIDE | 1 | | | | | |
| 33 | 90109–06316 | BOLT<br>BOULON | 1 | | | | | |
| 34 | 90464–09M49 | CLAMP<br>BRIDE | 1 | | | | | |
| 35 | 90465–11M10 | CLAMP<br>BRIDE | 1 | | | | | |
| 36 | 90109–06316 | BOLT<br>BOULON | 1 | | | | | |
| 37 | 6BG–48538–00 | CLAMP, CABLE 1<br>COLLIER | 1 | | | | | |
| 38 | 90109–06316 | BOLT<br>BOULON | 1 | | | | | |
| 39 | 6EE–42794–41 | LABEL, WARNING (GENERAL)<br>ETIQUETTE, AVERTISSEMENT | 1 | | | | | |
| 40 | 6EE–42794–51 | LABEL, WARNING (GENERAL)<br>ETIQUETTE, AVERTISSEMENT | 1 | | | | | |

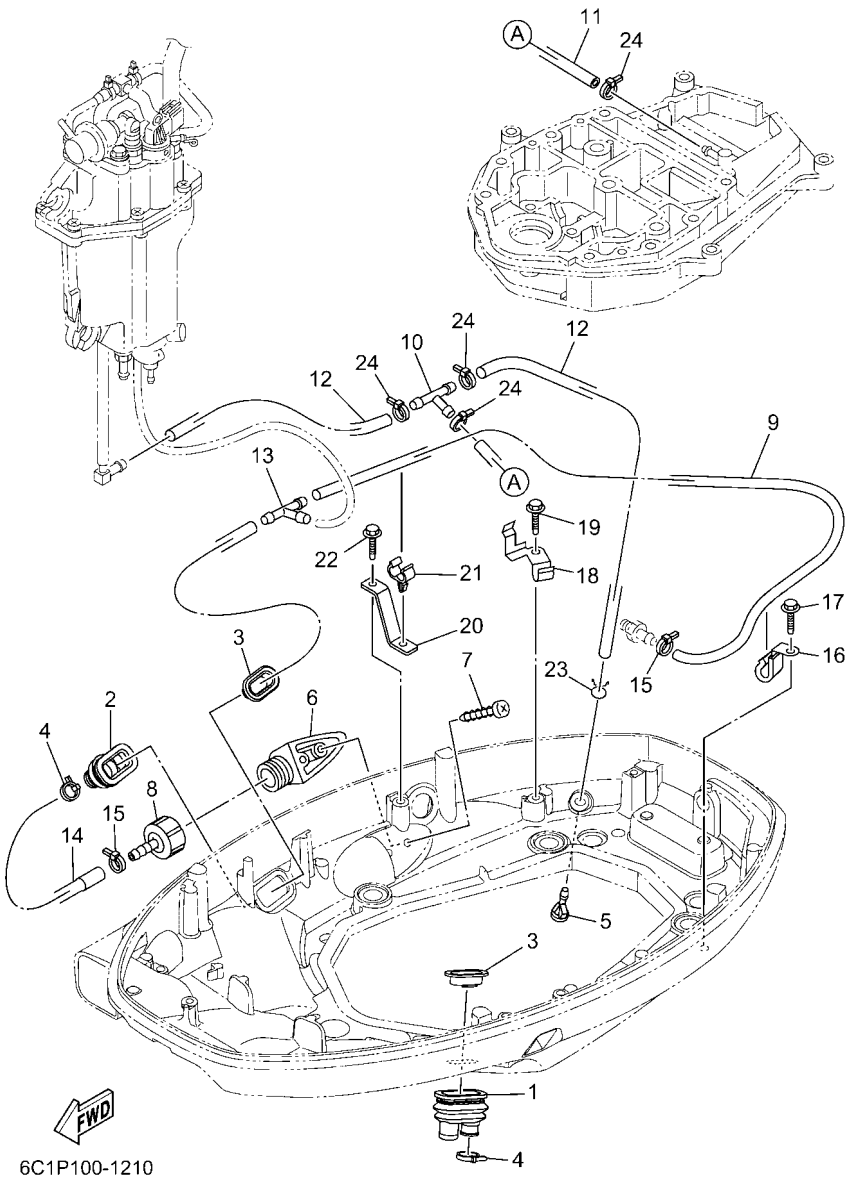


## FIG. 21 BOTTOM COWLING 2 — CAPOT INFERIEUR 2

| REF. NO. | PART NO. N° PIECES | DESCRIPTION DESCRIPTION | 6C8P | | | | | REMARKS REMARQUES |
|---|---|---|---|---|---|---|---|---|
| 1 | 6H1–42726–31 | GROMMET<br>PASSE-FIL | 1 | | | | | |
| 2 | 6BG–42724–01 | GROMMET<br>PASSE-FIL | 1 | | | | | |
| 3 | 6BG–42384–00 | SEAL, CAP<br>JOINT, CAPUCHON | 2 | | | | | |
| 4 | 90465–11M10 | CLAMP<br>BRIDE | 2 | | | | | |
| 5 | 6BL–44391–00 | NIPPLE, HOSE<br>RACCORD D'ESSENCE | 1 | | | | | |
| 6 | 6AW–12572–00 | ADAPTER<br>ADAPTATEUR | 1 | | | | | |
| 7 | 97780–60520 | SCREW, TAPPING<br>VIS, TETE BOMBEE | 2 | | | | | |
| 8 | 6R3–12580–01 | JOINT ASSY<br>ARTICULER (ENS.) | 1 | | | | | |
| 9 | 6CJ–14987–00 | HOSE (L659)<br>DURITE (L659) | 1 | | | | | |
| 10 | 688–24378–00 | PIPE, JOINT 3<br>DURITE RACCORDEMENT 3 | 1 | | | | | |
| 11 | 6CJ–4383A–00 | HOSE (L180)<br>DURITE (L180) | 1 | | | | | |
| 12 | 90445–09082 | HOSE (L150)<br>DURITE (L150) | 2 | | | | | |
| 13 | 688–24378–00 | PIPE, JOINT 3<br>DURITE RACCORDEMENT 3 | 1 | | | | | |
| 14 | 6BG–12481–00 | PIPE 1<br>DURITE 1 | 1 | | | | | |
| 15 | 90465–11M10 | CLAMP<br>BRIDE | 2 | | | | | |
| 16 | 90462–08067 | CLAMP<br>BRIDE | 1 | | | | | |
| 17 | 90109–06316 | BOLT<br>BOULON | 1 | | | | | |
| 18 | 6BG–24136–01 | CLAMP 2<br>COLLIER 2 | 1 | | | | | |
| 19 | 90109–06316 | BOLT<br>BOULON | 1 | | | | | |
| 20 | 6CJ–24135–00 | CLAMP 1<br>COLLIER 1 | 1 | | | | | |
| 21 | 90464–09130 | CLAMP<br>BRIDE | 1 | | | | | |
| 22 | 90109–06316 | BOLT<br>BOULON | 1 | | | | | |
| 23 | 90467–08M18 | CLIP<br>JONC | 1 | | | | | |
| 24 | 90465–11M10 | CLAMP<br>BRIDE | 4 | | | | | |

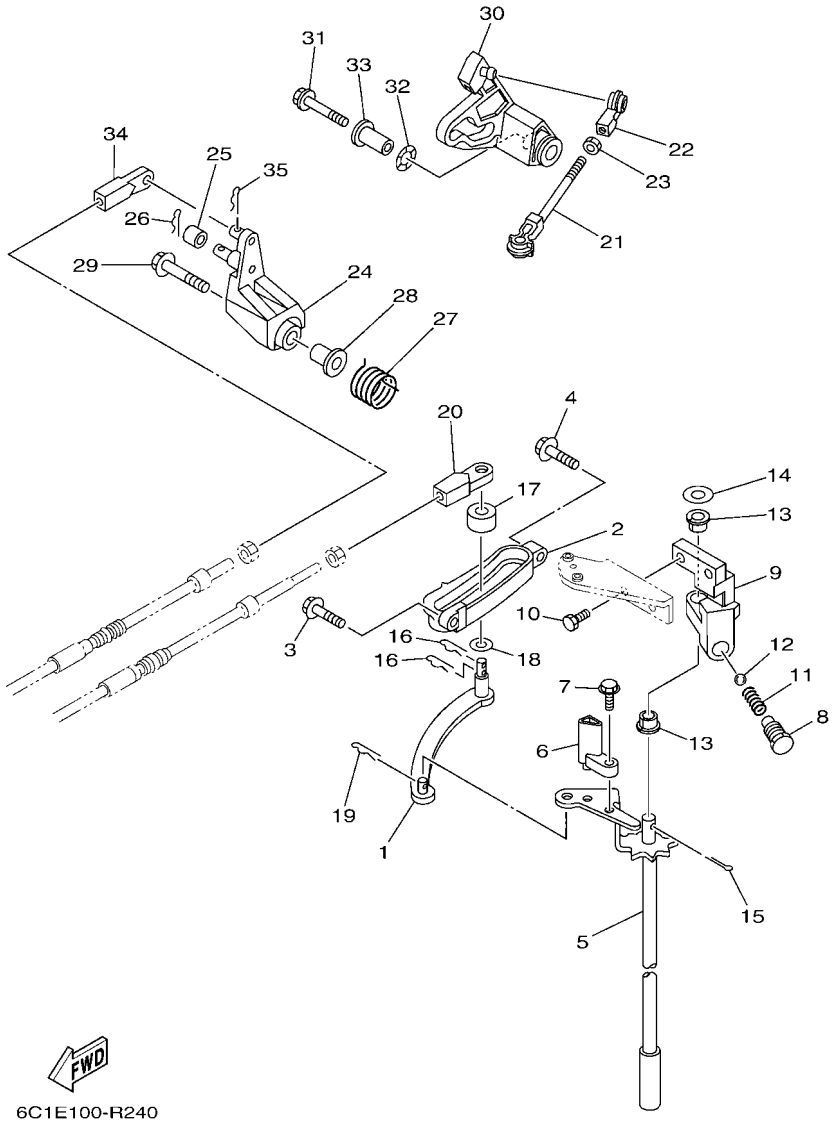


## FIG. 22 CONTROL COMMANDE

| REF. NO. | PART NO. N° PIECES | DESCRIPTION DESCRIPTION | 6C8P | | | | | REMARKS REMARQUES |
|---|---|---|---|---|---|---|---|---|
| 1 | 69W–44121–00 | LEVER, SHIFT ROD<br>LEVIER, TIGE D'INVERSION | 1 | | | | | |
| 2 | 62Y–44117–01 | BRACKET<br>SUPPORT | 1 | | | | | |
| 3 | 97E95–06520 | BOLT, HEXAGON W/W DEEP RECESS<br>VIS HEXAGONAL AVC RONDELLE | 1 | | | | | |
| 4 | 97E95–06525 | BOLT, HEXAGON W/W DEEP RECESS<br>VIS HEXAGONAL AVC RONDELLE | 1 | | | | | |
| 5 | 6C5–44120–03 | HANDLE GEAR SHIFT ASSY<br>LEVIER D'EMBRAYAGE | 1 | | | | | L(20.9")<br>L(20.9") |
| | 6C5–44120–13 | HANDLE GEAR SHIFT ASSY<br>LEVIER D'EMBRAYAGE | 1 | | | | | X(25.4")<br>X(25.4") |
| 6 | 6C5–44122–00 | BUSHING, SHIFT ROD LEVER<br>DOUILLE, LEVIER D'EMBRAYAGE | 1 | | | | | |
| 7 | 97595–05514 | BOLT, WITH WASHER<br>VIS HEXAGONAL AVC RONDELLE | 1 | | | | | |
| 8 | 62Y–42715–01 | BUSHING 2<br>COUSSINET 2 | 1 | | | | | |
| 9 | 62Y–44118–00–94 | BRACKET<br>SUPPORT | 1 | | | | | |
| 10 | 90101–06063 | BOLT<br>BOULON | 2 | | | | | |
| 11 | 90501–12082 | SPRING, COMPRESSION<br>RESSORT, COMPRESSION | 1 | | | | | |
| 12 | 93501–04M02 | BALL<br>BILLE | 1 | | | | | |
| 13 | 90386–90M90 | BUSH<br>DOUILLE | 2 | | | | | |
| 14 | 90201–10M20 | WASHER, PLATE<br>RONDELLE, PLATE | 1 | | | | | |
| 15 | 91490–20015 | PIN. COTTER<br>GOUPILLE | 1 | | | | | |
| 16 | 90468–18008 | CLIP<br>JONC | 2 | | | | | |
| 17 | 688–44122–00 | BUSHING, SHIFT ROD LEVER<br>DOUILLE, LEVIER D'EMBRAYAGE | 1 | | | | | |
| 18 | 90202–07M07 | WASHER, PLATE<br>RONDELLE, PLATE | 1 | | | | | |
| 19 | 90468–18008 | CLIP<br>JONC | 1 | | | | | |
| 20 | 69W–48344–00 | CABLE END, REMOTE CONTROL<br>CHAPE CABLE | 1 | | | | | |
| 21 | 688–41211–01 | LINK, ACCEL.<br>BIELLETTE, ACCELERATION | 1 | | | | | |
| 22 | 6H4–41237–00 | JOINT, LINK<br>RACCORD | 1 | | | | | |
| 23 | 95380–05700 | NUT<br>ECROU | 1 | | | | | |
| 24 | 62Y–42154–A0 | LEVER, THROTTLE CONTROL<br>LEVIER DE COMMANDE D'AVANCE | 1 | | | | | |
| 25 | 6C5–42171–00 | BUSHING<br>COUSSINET | 1 | | | | | |
| 26 | 91490–16010 | PIN. COTTER<br>GOUPILLE | 1 | | | | | |

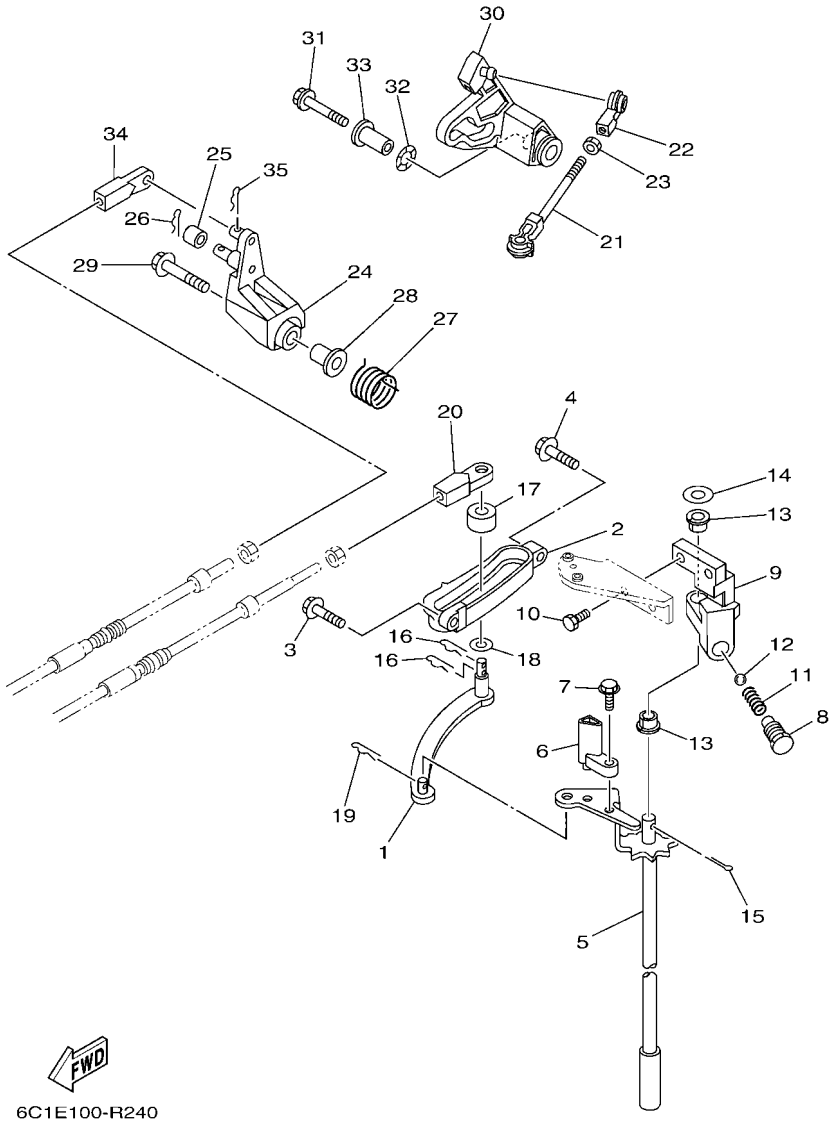


## FIG. 22 CONTROL — COMMANDE

| REF. NO. | PART NO. N° PIECES | DESCRIPTION DESCRIPTION | 6C8P | | | | | REMARKS REMARQUES |
|---|---|---|---|---|---|---|---|---|
| 27 | 62Y–44135–00 | SPRING<br>RESSORT | 1 | | | | | |
| 28 | 90387–06M45 | COLLAR<br>COLLERETTE | 1 | | | | | |
| 29 | 90119–06297 | BOLT, WITH WASHER<br>BOULON, AVEC RONDELLE | 1 | | | | | |
| 30 | 6C5–42335–00 | LEVER, ACCEL. CONTROL<br>LEVIER, ACCELERATION | 1 | | | | | |
| 31 | 95D95–06035 | BOLT, FLANGE DEEP RECESS<br>BOULON FIXATION | 1 | | | | | |
| 32 | 90206–10M04 | WASHER, WAVE<br>RONDELLE, ONDULEE | 1 | | | | | |
| 33 | 90387–06M82 | COLLAR<br>COLLERETTE | 1 | | | | | |
| 34 | 69W–48344–00 | CABLE END, REMOTE CONTROL<br>CHAPE CABLE | 1 | | | | | |
| 35 | 90468–18008 | CLIP<br>JONC | 1 | | | | | |

## FIG. 23 BRACKET 1 SUPPORT 1

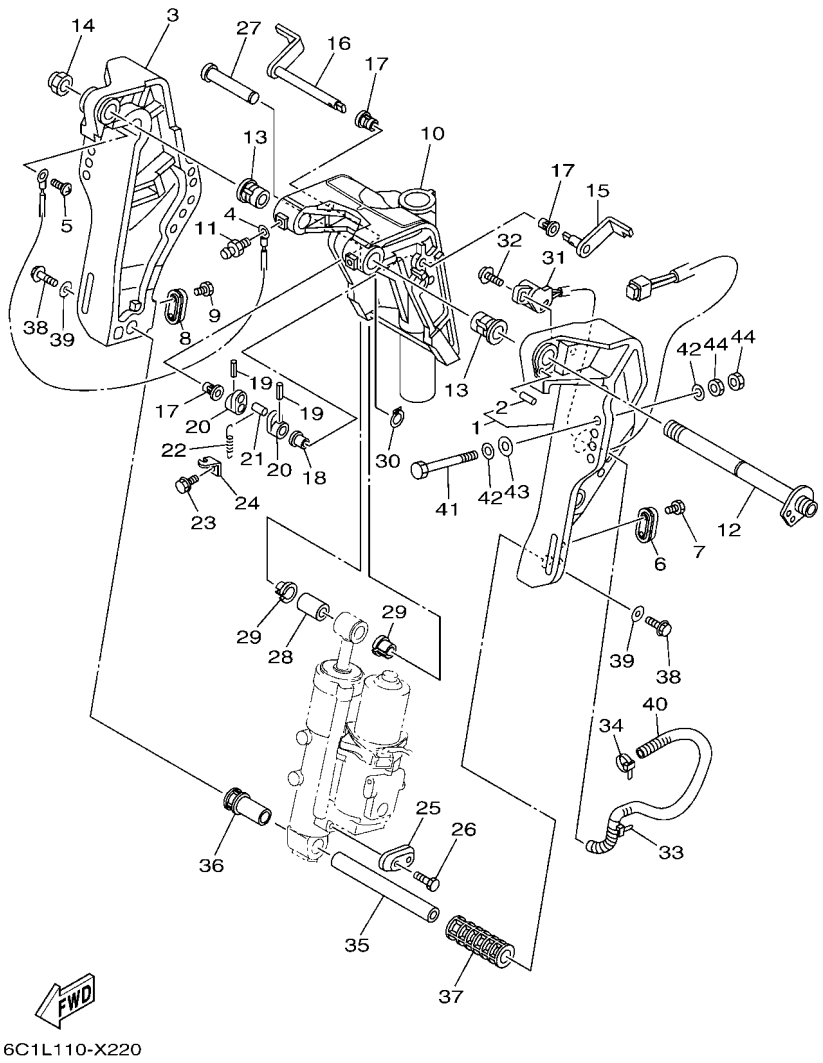


| REF. NO. | PART NO. N° PIECES | DESCRIPTION DESCRIPTION | 6C8P | | | | | REMARKS REMARQUES |
|---|---|---|---|---|---|---|---|---|
| 1 | 6C5–43111–10–8D | BRACKET, CLAMP 1<br>PRESSE 1 | 1 | | | | | |
| 2 | 93606–19002 | .PIN, DOWEL<br>.GOUPILLE | 1 | | | | | |
| 3 | 6C5–43112–01–8D | BRACKET, CLAMP 2<br>PRESSE 2 | 1 | | | | | |
| 4 | 6E5–82148–00 | WIRE, LEAD 4<br>FIL 4 | 1 | | | | | |
| 5 | 97885–06008 | SCREW, PAN HEAD<br>VIS, A ENCOCHE | 1 | | | | | |
| 6 | 65W–45251–00 | ANODE<br>ANODE | 1 | | | | | |
| 7 | 90101–06020 | BOLT<br>BOULON | 2 | | | | | |
| 8 | 65W–45251–00 | ANODE<br>ANODE | 1 | | | | | |
| 9 | 90101–06020 | BOLT<br>BOULON | 2 | | | | | |
| 10 | 6C5–43311–01–8D | BRACKET, SWIVEL 1<br>SUPPORT, PIVOT 1 | 1 | | | | | |
| 11 | 93700–06002 | NIPPLE, GREASE<br>PION | 3 | | | | | |
| 12 | 6C5–43131–00 | BOLT, CLAMP BRACKET<br>BOULON, PRESSE | 1 | | | | | |
| 13 | 90386–22MA4 | BUSH<br>DOUILLE | 2 | | | | | |
| 14 | 90185–22M11 | NUT, SELF-LOCKING<br>ECROU,AUTO-BLOQUANT | 1 | | | | | |
| 15 | 6C5–43181–00 | LEVER, TILT STOP 1<br>LEVIER VERROUILLAGE RELEVAGE 1 | 1 | | | | | |
| 16 | 6C5–43185–00 | LEVER, TILT STOP 2<br>LEVIER VERROUILLAGE RELEVAGE 2 | 1 | | | | | |
| 17 | 90386–10M16 | BUSH<br>DOUILLE | 3 | | | | | |
| 18 | 90386–10025 | BUSH<br>DOUILLE | 1 | | | | | |
| 19 | 91690–30020 | PIN, SPRING<br>AGRAFFE | 2 | | | | | |
| 20 | 6G5–43148–00 | COLLAR, DISTANCE<br>ENTRETOISE | 2 | | | | | |
| 21 | 90249–06M19 | PIN<br>GOUPILLE | 1 | | | | | |
| 22 | 90506–14M24 | SPRING, TENSION<br>RESSORT, TENSION | 1 | | | | | |
| 23 | 97E95–06512 | BOLT, HEXAGON W/W DEEP RECESS<br>VIS HEXAGONAL AVC RONDELLE | 1 | | | | | |
| 24 | 6G5–43144–00 | HOOK, SPRING<br>CROCHET | 1 | | | | | |
| 25 | 65W–45251–00 | ANODE<br>ANODE | 1 | | | | | |
| 26 | 90101–06020 | BOLT<br>BOULON | 2 | | | | | |
| 27 | 6E5–43126–02 | PIN, UPPER SHOCK MOUNT<br>AXE, SUPERIEUR AMORTISSEUR | 1 | | | | | |

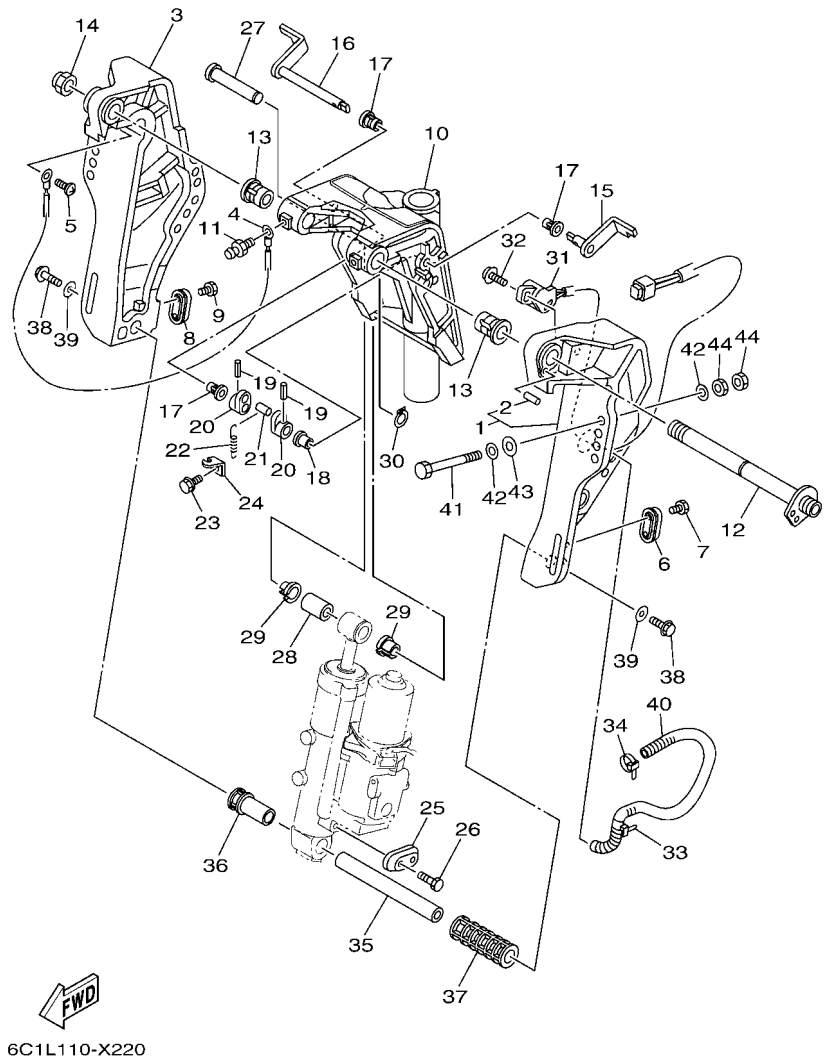


## FIG. 23 BRACKET 1 — SUPPORT 1

| REF. NO. | PART NO. N° PIECES | DESCRIPTION DESCRIPTION | 6C8P | | | | | REMARKS REMARQUES |
|---|---|---|---|---|---|---|---|---|
| 28 | 90386–18M92 | BUSH<br>DOUILLE | 1 | | | | | |
| 29 | 90386–18M35 | BUSH<br>DOUILLE | 2 | | | | | |
| 30 | 93410–18M05 | CIRCLIP<br>CIRCLIP | 1 | | | | | |
| 31 | 63D–83672–12 | TRIM SENDER<br>INCLINER RACCORD | 1 | | | | | |
| 32 | 97985–06216 | SCREW, WITH WASHER<br>VIS, AVEC RONDELLE | 2 | | | | | |
| 33 | 90464–99004 | CLAMP<br>BRIDE | 1 | | | | | |
| 34 | 90465–11M10 | CLAMP<br>BRIDE | 1 | | | | | |
| 35 | 6CJ–43818–00 | PIN, LOWER SHOCK MOUNT<br>AXE, INFERIEUR AMORTISSEUR | 1 | | | | | |
| 36 | 6C5–43833–00 | PIPE<br>TUYAU | 1 | | | | | |
| 37 | 6C5–43834–00 | PIPE<br>TUYAU | 1 | | | | | |
| 38 | 90119–10054 | BOLT, WITH WASHER<br>BOULON, AVEC RONDELLE | 2 | | | | | |
| 39 | 90201–10060 | WASHER, PLATE<br>RONDELLE, PLATE | 2 | | | | | |
| 40 | 90447–19009 | TUBE<br>DURITE | 1 | | | | | |
| 41 | 90101–12063 | BOLT (L:105MM)<br>BOULON (L:105MM) | 4 | | | | | |
| 42 | 90201–12062 | WASHER, PLATE<br>RONDELLE, PLATE | 8 | | | | | |
| 43 | 90201–12426 | WASHER, PLATE<br>RONDELLE, PLATE | 4 | | | | | |
| 44 | 95380–12600 | NUT<br>ECROU | 8 | | | | | |

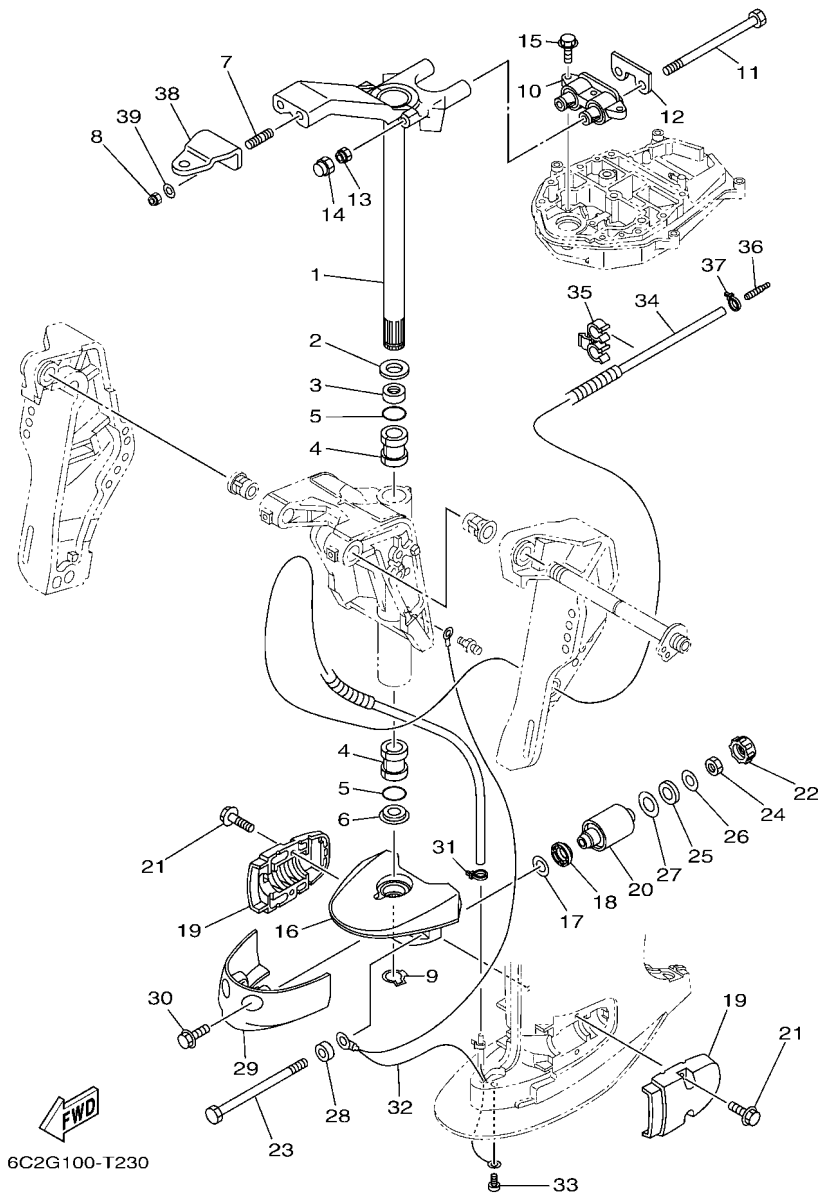


## FIG. 24 BRACKET 2 — SUPPORT 2

| REF. NO. | PART NO. N° PIECES | DESCRIPTION DESCRIPTION | 6C8P | | | | | REMARKS REMARQUES |
|---|---|---|---|---|---|---|---|---|
| 1 | 69W–42510–01–8D | STEERING BRACKET ASSY<br>DIRECTION SUPPORT (ENS.) | 1 | | | | | |
| 2 | 90201–30M00 | WASHER, PLATE<br>RONDELLE, PLATE | 1 | | | | | |
| 3 | 90386–30M78 | BUSH<br>DOUILLE | 1 | | | | | |
| 4 | 90386–30M77 | BUSH<br>DOUILLE | 2 | | | | | |
| 5 | 93210–29M94 | O-RING<br>JOINT TORIQUE | 2 | | | | | |
| 6 | 90386–30M60 | BUSH<br>DOUILLE | 1 | | | | | |
| 7 | 90116–10063 | BOLT, STUD<br>GOUJON | 2 | | | | | |
| 8 | 90185–10027 | NUT, SELF-LOCKING<br>ECROU,AUTO-BLOQUANT | 2 | | | | | |
| 9 | 93410–28M06 | CIRCLIP<br>CIRCLIP | 1 | | | | | |
| 10 | 64J–44514–00 | MOUNT DAMPER, UPPER SIDE<br>SILENT-BLOC, SUPERIEUR LATERAL | 1 | | | | | |
| 11 | 90109–08229 | BOLT<br>BOULON | 2 | | | | | |
| 12 | 69W–44526–01 | PLATE<br>PLAQUE | 1 | | | | | |
| 13 | 90185–08018 | NUT, SELF-LOCKING<br>ECROU,AUTO-BLOQUANT | 2 | | | | | |
| 14 | 6C5–44194–00 | CAP<br>CAPUCHON | 2 | | | | | |
| 15 | 97E75–08530 | BOLT, HEXAGON W/W DEEP RECESS<br>VIS HEXAGONAL AVC RONDELLE | 3 | | | | | |
| 16 | 69W–44551–00–8D | HOUSING, LOWER MOUNT RUBBER 1<br>BOITIER, SILENT-BLOC INFERIEUR | 1 | | | | | |
| 17 | 90201–12M16 | WASHER, PLATE<br>RONDELLE, PLATE | 2 | | | | | |
| 18 | 6C5–43885–01 | GROMMET<br>PASSE-FIL | 2 | | | | | |
| 19 | 6C5–44552–00–8D | HOUSING, LOWER MOUNT RUBBER 2<br>BOITIER, SILENT-BLOC INFERIEUR | 2 | | | | | |
| 20 | 69W–44555–00 | MOUNT DAMPER, LOWER SIDE<br>SILENT-BLOC, INFERIEUR LATERAL | 2 | | | | | |
| 21 | 90119–08094 | BOLT, WITH WASHER<br>BOULON, AVEC RONDELLE | 4 | | | | | |
| 22 | 6C5–44575–00 | DAMPER, LOWER MOUNT RUBBER<br>SILENT-BLOC, INFERIEUR | 2 | | | | | |
| 23 | 90109–12MA3 | BOLT<br>BOULON | 2 | | | | | |
| 24 | 95380–12700 | NUT<br>ECROU | 2 | | | | | |
| 25 | 90202–21100 | WASHER, PLATE<br>RONDELLE, PLATE | 2 | | | | | |
| 26 | 90201–13M19 | WASHER, PLATE<br>RONDELLE, PLATE | 2 | | | | | |
| 27 | 90201–22M05 | WASHER, PLATE<br>RONDELLE, PLATE | 2 | | | | | |

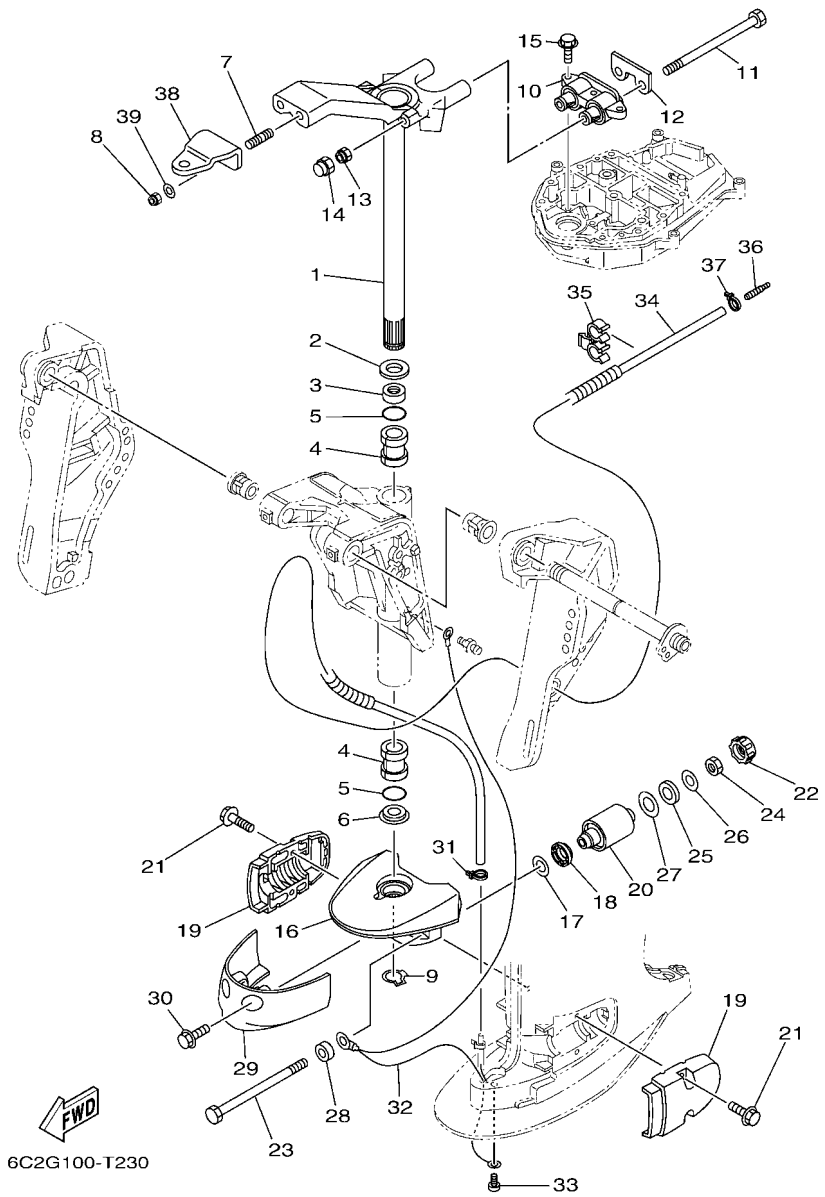


## FIG. 24 BRACKET 2 — SUPPORT 2

| REF. NO. | PART NO. N° PIECES | DESCRIPTION DESCRIPTION | 6C8P | | | | | REMARKS REMARQUES |
|---|---|---|---|---|---|---|---|---|
| 28 | 90387–12057 | COLLAR<br>COLLERETTE | 2 | | | | | |
| 29 | 67C–44553–00–8D | COVER, LOWER MOUNT<br>COUVERCLE, SUSPENSION INFERIEU | 1 | | | | | |
| 30 | 97E95–08520 | BOLT, HEXAGON W/W DEEP RECESS<br>VIS HEXAGONAL AVC RONDELLE | 2 | | | | | |
| 31 | 90465–11M10 | CLAMP<br>BRIDE | 1 | | | | | |
| 32 | 67C–82127–10 | WIRE, LEAD 2<br>FIL 2 | 1 | | | | | |
| 33 | 97885–06008 | SCREW, PAN HEAD<br>VIS, A ENCOCHE | 1 | | | | | |
| 34 | 6CJ–44385–00 | HOSE, WATER 1<br>TUBE D'EAU 1 | 1 | | | | | |
| 35 | 90464–10006 | CLAMP<br>BRIDE | 1 | | | | | |
| 36 | 6E5–83558–00 | END, NIPPLE<br>RACCORD DE NIPPLE | 1 | | | | | |
| 37 | 90465–11M10 | CLAMP<br>BRIDE | 1 | | | | | |
| 38 | 65W–48511–01 | HOOK, STEERING<br>ATTACHE, DIRECTION | 1 | | | | | |
| 39 | 90201–10049 | WASHER, PLATE<br>RONDELLE, PLATE | 2 | | | | | |

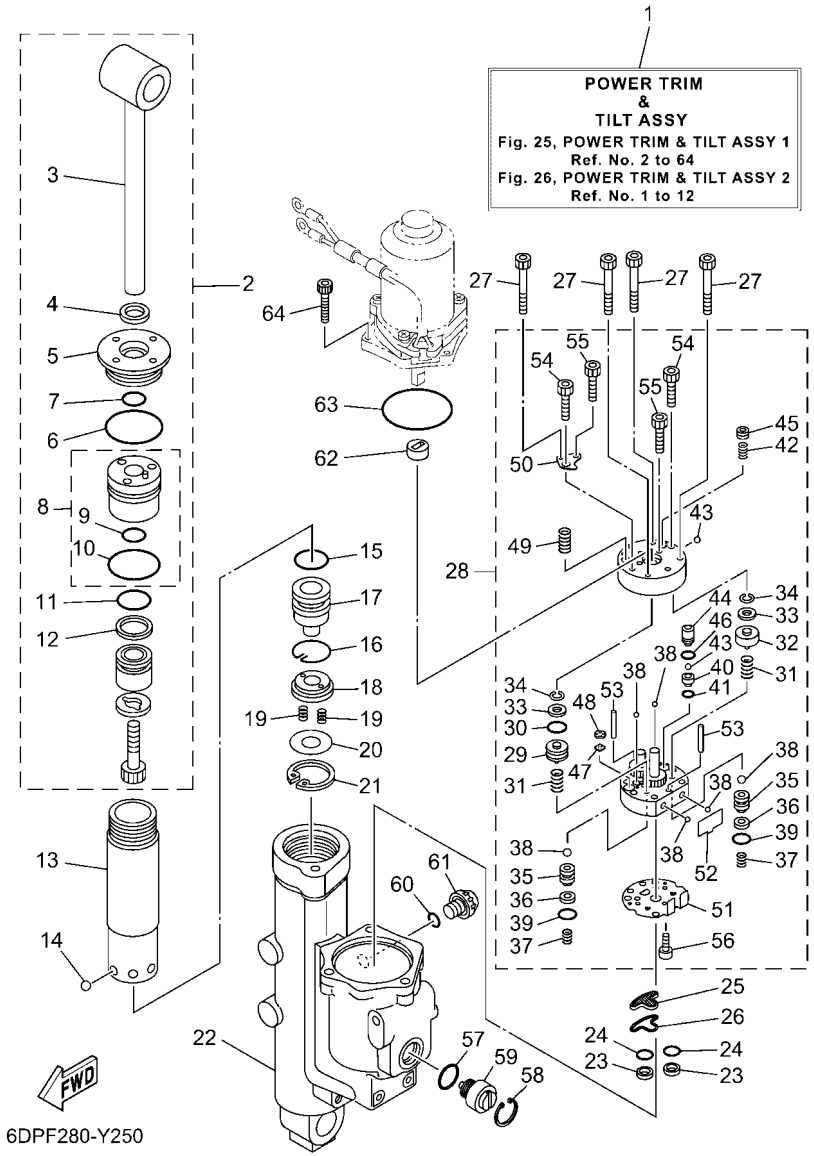


## FIG. 25 POWER TRIM & TILT ASSY 1 — PUISSANCE PARER ET INCLINER 1

| REF. NO. | PART NO. N° PIECES | DESCRIPTION DESCRIPTION | 6C8P | | | | | REMARKS REMARQUES |
|---|---|---|---|---|---|---|---|---|
| 1 | 6C5–43800–13 | POWER TRIM & TILT ASSY<br>PUISSANCE PARER ET INCLINER (E | 1 | | | | | |
| 2 | 6CJ–43810–10 | TILT PISTON SUB ASSY<br>INCLINER PISTON AUXILIAIRE(ENS | 1 | | | | | |
| 3 | 6CJ–43801–10 | .ROD<br>.TIGE | 1 | | | | | |
| 4 | 62Y–43822–00 | .SEAL, TRIM DUST<br>.JOINT | 1 | | | | | |
| 5 | 6CJ–43821–10 | .SCREW, TRIM CYLINDER END<br>.VIS | 1 | | | | | |
| 6 | 93210–49001 | .O-RING<br>.JOINT TORIQUE | 1 | | | | | |
| 7 | 6CJ–43863–00 | .O-RING<br>.JOINT TORIQUE | 1 | | | | | |
| 8 | 6CJ–4380R–10 | .CYLINDER END SUB ASSY<br>.CYLINDRE RACCORD (ENS.) | 1 | | | | | |
| 9 | 6CJ–43863–00 | ..O-RING<br>..JOINT TORIQUE | 1 | | | | | |
| 10 | 93210–44006 | ..O-RING<br>..JOINT TORIQUE | 1 | | | | | |
| 11 | 6C5–43861–00 | .O-RING<br>.JOINT TORIQUE | 1 | | | | | |
| 12 | 6C5–43871–00 | .RING, BACK UP<br>.SEGMENT | 1 | | | | | |
| 13 | 6CJ–22471–10 | CYLINDER, SHOCK ABSORBER<br>CYLINDRE, AMORTISSEUR | 1 | | | | | |
| 14 | 93503–16003 | BALL<br>BILLES | 6 | | | | | |
| 15 | 6C5–43861–00 | O-RING<br>JOINT TORIQUE | 1 | | | | | |
| 16 | 6C5–43875–00 | RING, SNAP<br>RESSORT | 1 | | | | | |
| 17 | 6CJ–4381B–10 | FREE PISTON SUB ASSY<br>PISTON AUXILIAIRE (ENS.) | 1 | | | | | |
| 18 | 6C5–43899–00 | PLATE STOPPER<br>PLAQUETTE | 1 | | | | | |
| 19 | 62X–4384H–00 | SPRING<br>RESSORT | 2 | | | | | |
| 20 | 6C5–22435–00 | PLATE, VALVE 2<br>PLAQUE, CLAPET 2 | 1 | | | | | |
| 21 | 99009–32500 | CIRCLIP<br>CIRCLIP | 1 | | | | | |
| 22 | 6C5–4380K–12 | CYLINDER, TILT SUB ASSY<br>CYLINDRE | 1 | | | | | |
| 23 | 6C5–43817–10 | FILTER 2<br>FILTRE 2 | 2 | | | | | |
| 24 | 69J–4389J–00 | O-RING<br>JOINT TORIQUE | 2 | | | | | |
| 25 | 6C5–43816–00 | FILTER 1<br>FILTRE 1 | 1 | | | | | |
| 26 | 6C5–4380G–00 | PLATE<br>PLAQUE | 1 | | | | | |
| 27 | 91318–05045 | BOLT<br>BOULON | 4 | | | | | |

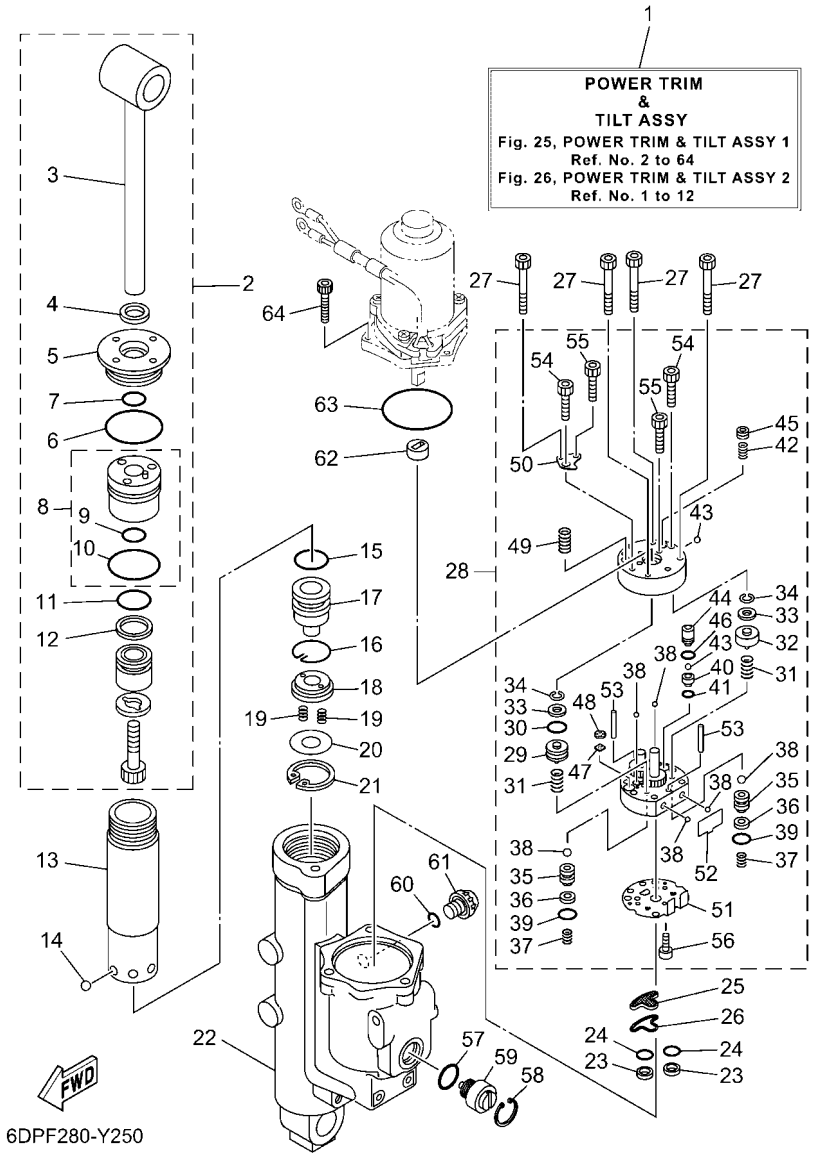


## FIG. 25 POWER TRIM & TILT ASSY 1 — PUISSANCE PARER ET INCLINER 1

| REF. NO. | PART NO. N° PIECES | DESCRIPTION DESCRIPTION | 6C8P | | | | | REMARKS REMARQUES |
|---|---|---|---|---|---|---|---|---|
| 28 | 6C5–43830–10 | GEAR PUMP ASSY<br>POMPE A PIGNON (ENS.) | 1 | | | | | |
| 29 | 6D8–43841–00 | .PISTON, SHUTTLE<br>.PISTON | 1 | | | | | |
| 30 | 6H1–43883–00 | .O-RING<br>.JOINT TORIQUE | 1 | | | | | |
| 31 | 69J–43894–00 | .SPRING, SHUTTLE RETURN<br>.RESSORT | 2 | | | | | |
| 32 | 6D8–4384M–00 | .PISTON, SHUTTLE 2<br>.PISTON 2 | 1 | | | | | |
| 33 | 69A–4384F–00 | .SEAL, MAIN VALVE<br>.JOINT | 2 | | | | | |
| 34 | 99002–03600 | .CIRCLIP<br>.CIRCLIP | 2 | | | | | |
| 35 | 6EK–4382E–00 | .ADAPTOR 2<br>.ADAPTEUR 2 | 2 | | | | | |
| 36 | 6C6–4387G–00 | .WASHER<br>.RONDELLE | 2 | | | | | |
| 37 | 6C6–43853–00 | .SPRING, MAIN VALVE<br>.RESSORT | 2 | | | | | |
| 38 | 93505–32038 | .BALL<br>.BILLE | 6 | | | | | |
| 39 | 69J–4389J–00 | .O-RING<br>.JOINT TORIQUE | 2 | | | | | |
| 40 | 6D8–43851–00 | .SEAT, RELIEF VALVE<br>.SIEGE | 1 | | | | | |
| 41 | 93210–064A5 | .O-RING<br>.JOINT TORIQUE | 1 | | | | | |
| 42 | 6C5–43855–10 | .SPRING, UP RELIEF<br>.RESSORT | 1 | | | | | |
| 43 | 93501–08001 | .BALL<br>.BILLE | 2 | | | | | |
| 44 | 6D8–43844–00 | .PIN, VALVE SUPPORT<br>.GOUPILLE | 1 | | | | | |
| 45 | 6D8–43843–00 | .SCREW, VALVE LOCK<br>.VIS | 1 | | | | | |
| 46 | 93210–04N51 | .O-RING<br>.JOINT TORIQUE | 1 | | | | | |
| 47 | 6H1–4384G–11 | .SEAL, RELIEF VALVE<br>.JOINT | 1 | | | | | |
| 48 | 6H1–43844–10 | .PIN, VALVE SUPPORT<br>.GOUPILLE | 1 | | | | | |
| 49 | 6C5–43856–10 | .SPRING, DOWN RELIEF<br>.RESSORT | 1 | | | | | |
| 50 | 6D8–4382L–00 | .CAP, RELIEF VALVE<br>.CAPUCHON | 1 | | | | | |
| 51 | 6C5–43895–00 | .SEAT, RELIEF VALVE<br>.SIEGE | 1 | | | | | |
| 52 | 6C5–43854–00 | .SPRING, MANUAL RELEASE<br>.RESSORT | 1 | | | | | |
| 53 | 93604–26256 | .PIN, DOWEL<br>.CLAVETTE | 2 | | | | | |
| 54 | 91318–05030 | .BOLT<br>.BOULON | 2 | | | | | |

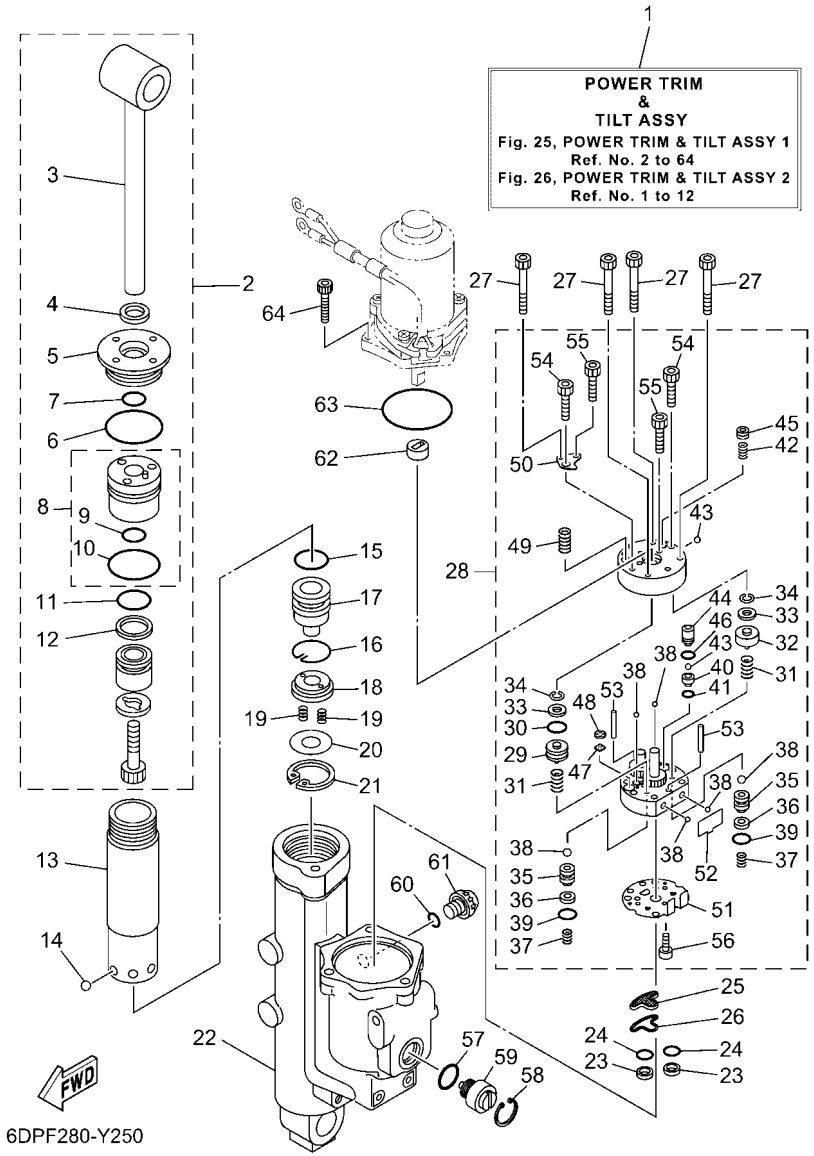


## FIG. 25 POWER TRIM & TILT ASSY 1 — PUISSANCE PARER ET INCLINER 1

| REF. NO. | PART NO. N° PIECES | DESCRIPTION DESCRIPTION | 6C8P | | | | | REMARKS REMARQUES |
|---|---|---|---|---|---|---|---|---|
| 55 | 91318–03025 | .BOLT<br>.BOULON | 2 | | | | | |
| 56 | 91318–03005 | .BOLT<br>.BOULON | 1 | | | | | |
| 57 | 6D8–43863–00 | O-RING<br>JOINT TORIQUE | 1 | | | | | |
| 58 | 6H1–43875–00 | RING, SNAP<br>RESSORT | 1 | | | | | |
| 59 | 6CJ–43845–10 | SCREW, MANUAL RELEASE<br>VIS | 1 | | | | | |
| 60 | 6CJ–43861–10 | O-RING<br>JOINT TORIQUE | 1 | | | | | |
| 61 | 6CJ–43829–20 | PLUG, RESERVOIR<br>BOUCHON | 1 | | | | | |
| 62 | 6C5–43831–00 | CONNECTOR, SHAFT<br>RACCORD | 1 | | | | | |
| 63 | 93210–64488 | O-RING<br>JOINT TORIQUE | 1 | | | | | |
| 64 | 91380–05020 | BOLT<br>BOULON | 3 | | | | | |

## FIG. 26 POWER TRIM & TILT ASSY 2 — PUISSANCE PARER ET INCLINER 2

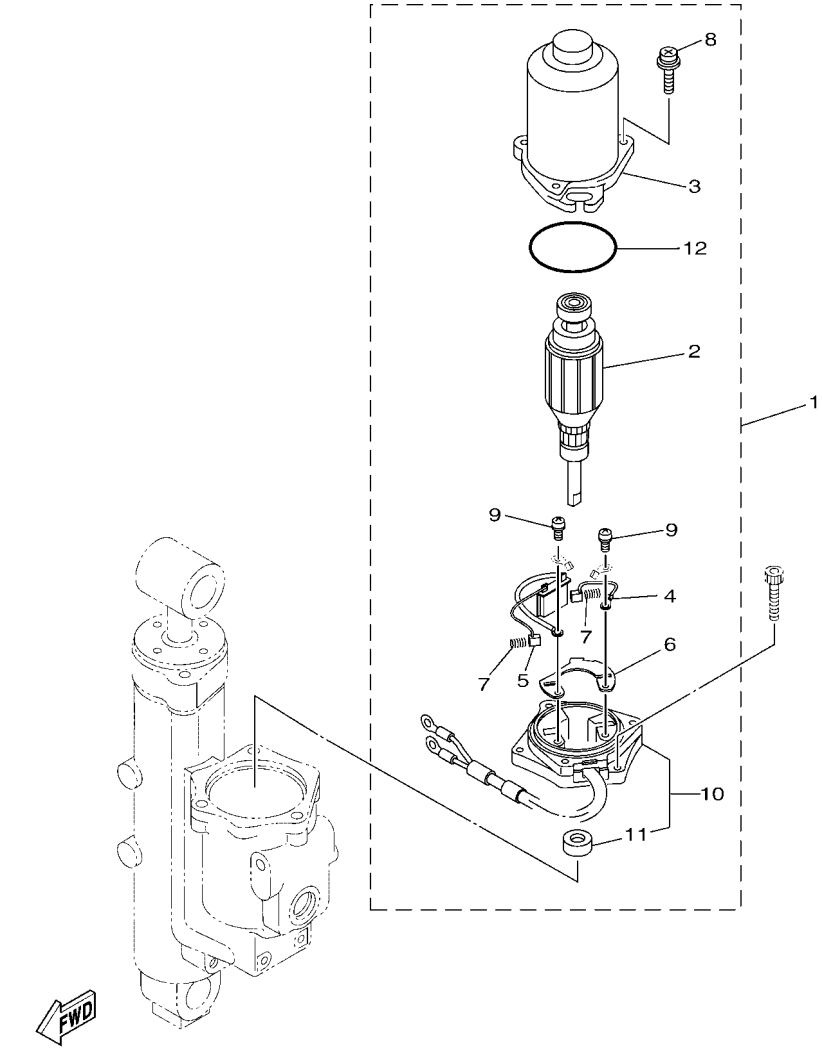


| REF. NO. | PART NO. N° PIECES | DESCRIPTION DESCRIPTION | 6C8P | | | | | REMARKS REMARQUES |
|---|---|---|---|---|---|---|---|---|
| 1 | 6CJ–43880–13 | MOTOR ASSY<br>MOTEUR (ENS.) | 1 | | | | | |
| 2 | 6CJ–43805–11 | .ARMATURE ASSY<br>.INDUIT (ENS.) | 1 | | | | | |
| 3 | 6CJ–43804–11 | .STATOR ASSY<br>.STATOR (ENS.) | 1 | | | | | |
| 4 | 6EK–43892–00 | .BRUSH 2<br>.BALAI 2 | 1 | | | | | |
| 5 | 6CJ–82181–10 | .CIRCUIT BREAKER COMP.<br>.RUPTEUR COMPLET | 1 | | | | | |
| 6 | 6EK–4380F–00 | .PLATE, BRUSH HOLDER<br>.PLAQUE | 1 | | | | | |
| 7 | 62X–4386K–00 | .SPRING, BRUSH<br>.RESSORT, BALAI | 2 | | | | | |
| 8 | 6CJ–43879–10 | .SCREW, WITH WASHER<br>.VIS, AVEC RONDELLE | 3 | | | | | |
| 9 | 97602–04316 | .SCREW, PAN HEAD WITH WASHER<br>.VIS, AVEC RONDELLE | 2 | | | | | |
| 10 | 6CJ–43881–10 | .FRAME, END<br>.BATI | 1 | | | | | |
| 11 | 6EK–43882–00 | ..OIL SEAL<br>..JOINT SPI | 1 | | | | | |
| 12 | 6CJ–43862–11 | .O-RING<br>.JOINT TORIQUE | 1 | | | | | |

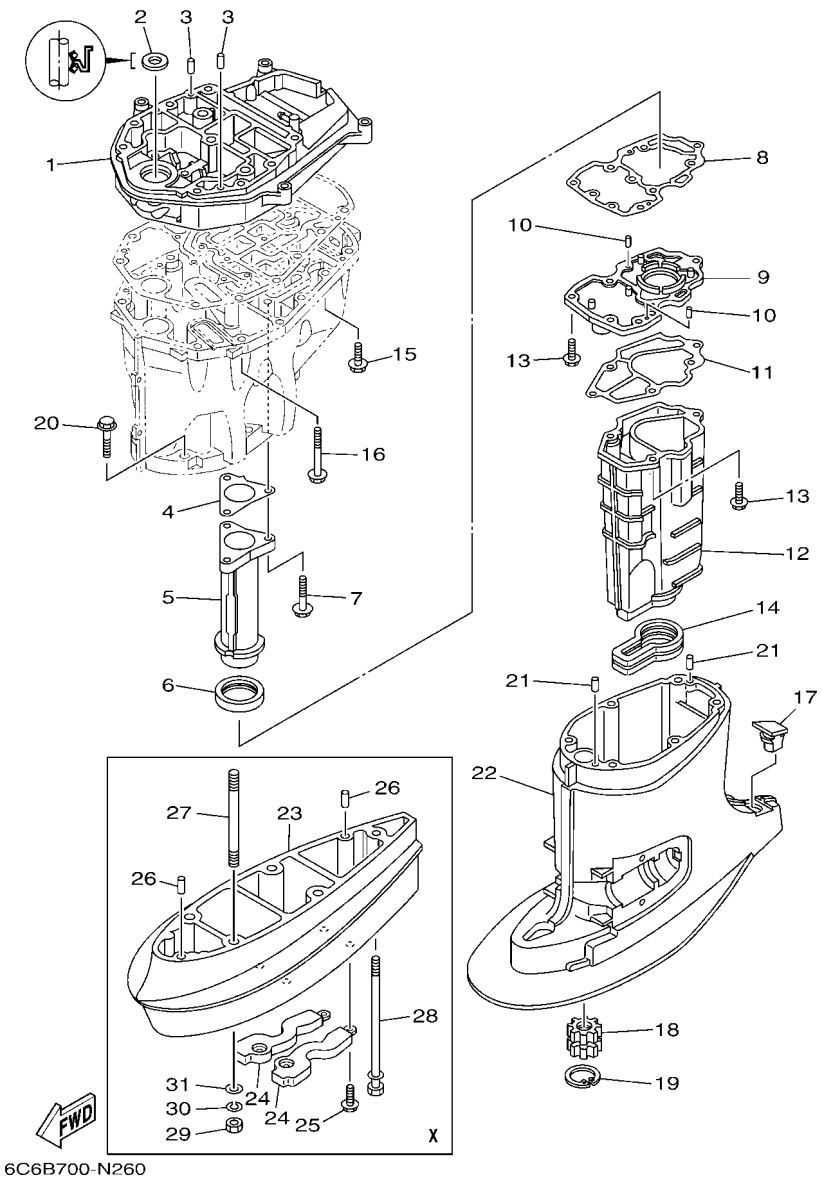


6C6B700-N260

## FIG. 27 UPPER CASING — FOURREAU

| REF. NO. | PART NO. N° PIECES | DESCRIPTION DESCRIPTION | 6C8P | | | | | REMARKS REMARQUES |
|---|---|---|---|---|---|---|---|---|
| 1 | 6C5–41137–03 | GUIDE, EXHAUST<br>COLLECTEUR D'ECHAPPEMENT | 1 | | | | | |
| 2 | 93103–18011 | OIL SEAL<br>JOINT SPY | 1 | | | | | |
| 3 | 93608–12M05 | PIN, DOWEL<br>AXE | 2 | | | | | |
| 4 | 6C5–41133–00 | GASKET, EXHAUST MANIFOLD 1<br>JOINT, PIPE D'ECHAPPEMENT | 1 | | | | | |
| 5 | 6C5–41131–00–CA | MANIFOLD, EXT. 1<br>PIPE D'ECHAPPEMENT | 1 | | | | | |
| 6 | 6C5–46132–00 | GASKET 1<br>JOINT 1 | 1 | | | | | |
| 7 | 90119–06261 | BOLT, WITH WASHER<br>BOULON, AVEC RONDELLE | 3 | | | | | |
| 8 | 6C5–41134–00 | GASKET, EXHAUST MANIFOLD 2<br>JOINT, PIPE D'ECHAPPEMENT 2 | 1 | | | | | |
| 9 | 6C5–45181–00–CA | PLATE<br>PLAQUETTE | 1 | | | | | |
| 10 | 93604–10M03 | PIN, DOWEL<br>CLAVETTE | 2 | | | | | |
| 11 | 6C5–41135–00 | GASKET, EXHAUST MANIFOLD<br>JOINT, PIPE D'ECHAPPEMENT | 1 | | | | | |
| 12 | 6C5–14711–00–CA | MUFFLER 1<br>POT D'ECHAPPEMENT 1 | 1 | | | | | |
| 13 | 97E75–06525 | BOLT, HEXAGON W/W DEEP RECESS<br>VIS HEXAGONAL AVC RONDELLE | 6 | | | | | |
| 14 | 6C5–45123–00 | GASKET, MUFFLER<br>JOINT, POT DE DETENTE | 1 | | | | | |
| 15 | 90119–08182 | BOLT, WITH WASHER<br>BOULON, AVEC RONDELLE | 4 | | | | | |
| 16 | 90119–08202 | BOLT, WITH WASHER<br>BOULON, AVEC RONDELLE | 8 | | | | | |
| 17 | 6C5–45155–02 | CAP<br>CAPUCHON | 1 | | | | | |
| 18 | 69W–45318–00 | BUSHING, DRIVE SHAFT<br>DOUILLE, ARBRE MOTEUR | 1 | | | | | |
| 19 | 93420–36M01 | CIRCLIP<br>CIRCLIP, TYPE S | 1 | | | | | |
| 20 | 97E75–10545 | BOLT, HEXAGON W/W DEEP RECESS<br>VIS HEXAGONAL AVC RONDELLE | 6 | | | | | |
| 21 | 93606–12019 | PIN, DOWEL<br>GOUPILLE | 2 | | | | | |
| 22 | 6C5–45111–00–8D | CASING, UPPER<br>FOURREAU | 1 | | | | | |
| 23 | 6C5–45211–00–8D | EXTENSION<br>EXTENSION | 1 | | | | | X(25.4")<br>X(25.4") |
| 24 | 6C5–45213–01 | COVER, EXTENSION<br>COUVERCLE EXTENSION | 2 | | | | | X(25.4")<br>X(25.4") |
| 25 | 97E75–06520 | BOLT, HEXAGON W/W DEEP RECESS<br>VIS HEXAGONAL AVC RONDELLE | 4 | | | | | X(25.4")<br>X(25.4") |
| 26 | 93606–12019 | PIN, DOWEL<br>GOUPILLE | 2 | | | | | X(25.4")<br>X(25.4") |
| 27 | 90116–10M53 | BOLT, STUD<br>GOUJON | 4 | | | | | X(25.4")<br>X(25.4") |

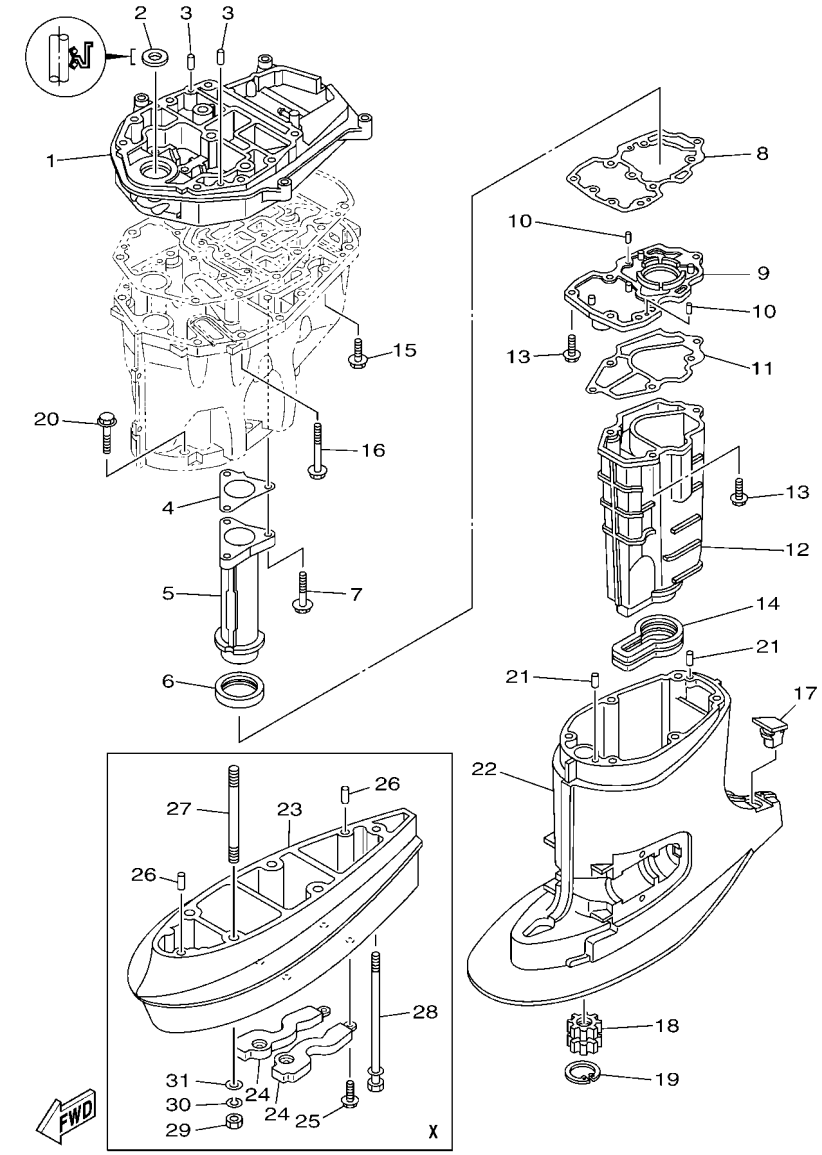


6C6B700-N260

## FIG. 27 UPPER CASING — FOURREAU

| REF. NO. | PART NO. N° PIECES | DESCRIPTION DESCRIPTION | 6C8P | | | | | REMARKS REMARQUES |
|---|---|---|---|---|---|---|---|---|
| 28 | 90119–08M00 | BOLT, WITH WASHER<br>BOULON, AVEC RONDELLE | 1 | | | | | X(25.4")<br>X(25.4") |
| 29 | 95380–10600 | NUT<br>ECROU | 4 | | | | | X(25.4")<br>X(25.4") |
| 30 | 92990–10100 | WASHER, SPRING<br>RONDELLE, GROWER | 4 | | | | | X(25.4")<br>X(25.4") |
| 31 | 92995–10600 | WASHER<br>RONDELLE | 4 | | | | | X(25.4")<br>X(25.4") |

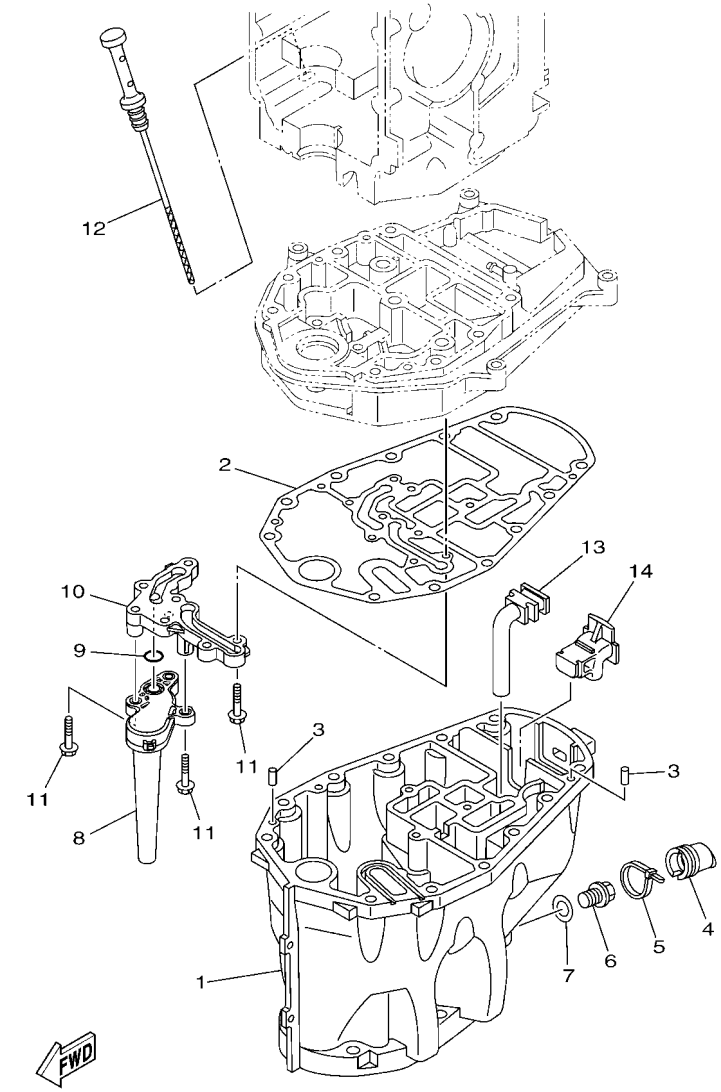


## FIG. 28 OIL PAN — VENTILATEUR D'HUILE

| REF. NO. | PART NO. N° PIECES | DESCRIPTION DESCRIPTION | 6C8P | | | | | REMARKS REMARQUES |
|---|---|---|---|---|---|---|---|---|
| 1 | 6C5–15311–02 | OIL PAN<br>VENTILATEUR D'HUILE | 1 | | | | | |
| 2 | 6C5–15312–01 | GASKET, OIL PAN<br>JOINT DE VENTILATEUR D'HUILE | 1 | | | | | |
| 3 | 93606–12019 | PIN, DOWEL<br>GOUPILLE | 2 | | | | | |
| 4 | 6CJ–15316–01 | DAMPER 1<br>AMORTISSEUR 1 | 1 | | | | | |
| 5 | 90465–11M59 | CLAMP<br>BRIDE | 1 | | | | | |
| 6 | 90340–14M06 | PLUG, STRAIGHT SCREW<br>PLOT, FILETE DROIT | 1 | | | | | |
| 7 | 90430–14M09 | GASKET<br>JOINT | 1 | | | | | |
| 8 | 6CJ–13411–10 | STRAINER, OIL<br>FILTRE, HUILE | 1 | | | | | |
| 9 | 93210–12790 | O-RING<br>JOINT TORIQUE | 1 | | | | | |
| 10 | 6CJ–15333–10 | COVER<br>COUVERCLE | 1 | | | | | |
| 11 | 95812–06025 | BOLT, FLANGE<br>BOULON | 9 | | | | | |
| 12 | 6C5–15362–00 | PLUG, OIL LEVEL<br>PLOT, NIVEAU D'HUILE | 1 | | | | | |
| 13 | 6C5–45135–10 | PIPE<br>TUYAU | 1 | | | | | |
| 14 | 6C5–45136–10 | PIPE<br>DURITE | 1 | | | | | |

## FIG. 29 LOWER CASING & DRIVE 1 — BOITIER D'HELICE TRANSMISSION1

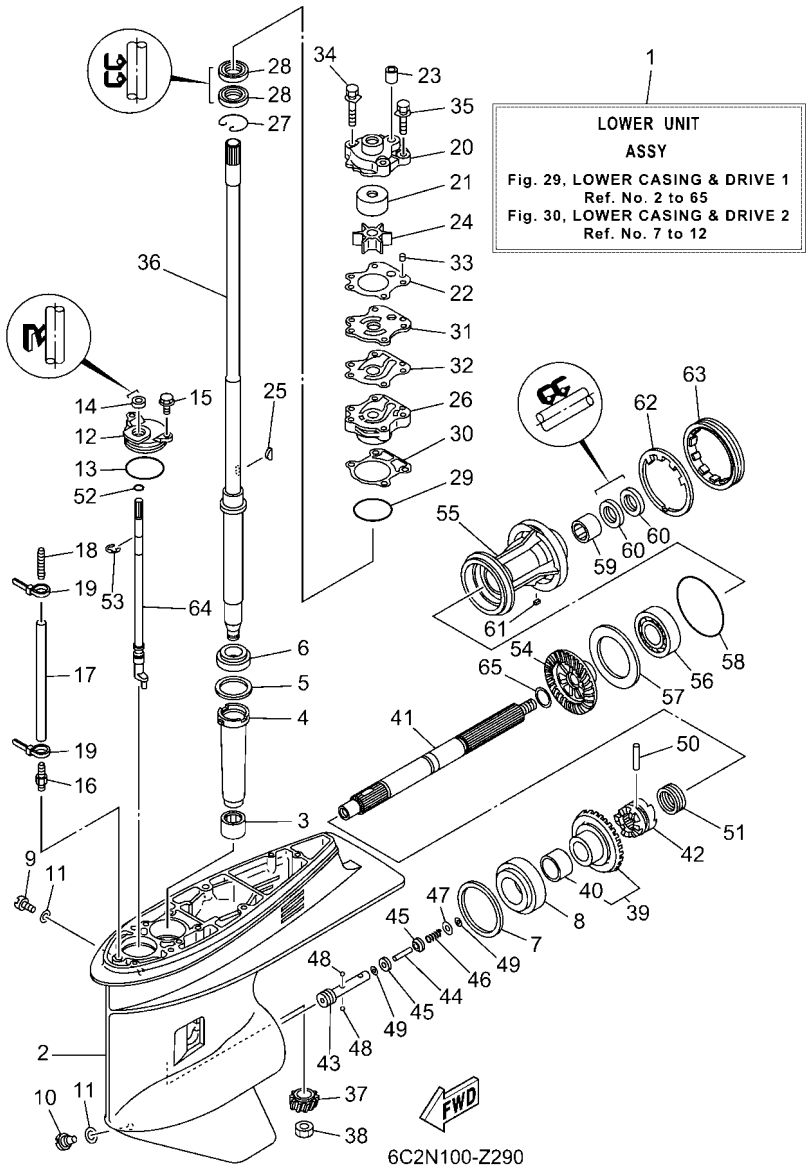


| REF. NO. | PART NO. N° PIECES | DESCRIPTION DESCRIPTION | 6C8P | | | | | REMARKS REMARQUES |
|---|---|---|---|---|---|---|---|---|
| 1 | 68S–45300–34–8D | LOWER UNIT ASSY<br>UNITE INFERIEURE (ENS.) | 1 | | | | | L(20.9")<br>L(20.9") |
| | 68S–45300–44–8D | LOWER UNIT ASSY<br>UNITE INFERIEURE (ENS.) | 1 | | | | | X(25.4")<br>X(25.4") |
| 2 | 67F–45301–00–8D | CASING, LOWER<br>BEQUILLE | 1 | | | | | |
| 3 | 93315–52563 | BEARING<br>ROULEMENT | 1 | | | | | |
| 4 | 688–45536–01 | SLEEVE, DRIVE SHAFT<br>MANCHON, ARBRE MOTEUR | 1 | | | | | |
| 5 | 688–45587–01 | SHIM (T:0.10MM)<br>CALE (T:0.10MM) | 1 | | | | | UR<br>UR |
| | 688–45587–10 | SHIM (T:0.12MM)<br>CALE (T:0.12MM) | 1 | | | | | UR<br>UR |
| | 688–45587–20 | SHIM (T:0.15MM)<br>CALE (T:0.15MM) | 1 | | | | | UR<br>UR |
| | 688–45587–30 | SHIM (T:0.18MM)<br>CALE (T:0.18MM) | 1 | | | | | UR<br>UR |
| | 688–45587–40 | SHIM (T:0.30MM)<br>CALE (T:0.30MM) | 1 | | | | | UR<br>UR |
| | 688–45587–50 | SHIM (T:0.40MM)<br>CALE (T:0.40MM) | 1 | | | | | UR<br>UR |
| | 688–45587–60 | SHIM (T:0.50MM)<br>CALE (T:0.50MM) | 1 | | | | | UR<br>UR |
| 6 | 93332–000U3 | BEARING<br>ROULEMENT | 1 | | | | | |
| 7 | 688–45567–01 | SHIM (T:0.10MM)<br>CALE (T:0.10MM) | 1 | | | | | UR<br>UR |
| | 688–45567–10 | SHIM (T:0.12MM)<br>CALE (T:0.12MM) | 1 | | | | | UR<br>UR |
| | 688–45567–20 | SHIM (T:0.15MM)<br>CALE (T:0.15MM) | 1 | | | | | UR<br>UR |
| | 688–45567–30 | SHIM (T:0.18MM)<br>CALE (T:0.18MM) | 1 | | | | | UR<br>UR |
| | 688–45567–40 | SHIM (T:0.30MM)<br>CALE (T:0.30MM) | 1 | | | | | UR<br>UR |
| | 688–45567–50 | SHIM (T:0.40MM)<br>CALE (T:0.40MM) | 1 | | | | | UR<br>UR |
| | 688–45567–60 | SHIM (T:0.50MM)<br>CALE (T:0.50MM) | 1 | | | | | UR<br>UR |
| 8 | 93332–00095 | BEARING<br>ROULEMENT | 1 | | | | | |
| 9 | 90340–08002 | PLUG, STRAIGHT SCREW<br>PLOT, FILETE DROIT | 1 | | | | | |
| 10 | 688–45341–10 | PLUG, DRAIN<br>BOUCHON DE VIDANGE | 1 | | | | | |
| 11 | 90430–08003 | GASKET<br>JOINT | 2 | | | | | |
| 12 | 688–45321–00 | PLATE<br>PLAQUETTE | 1 | | | | | |
| 13 | 93210–49046 | O-RING<br>JOINT TORIQUE | 1 | | | | | |
| 14 | 93106–09014 | OIL SEAL<br>JOINT SPY | 1 | | | | | |

## FIG. 29 LOWER CASING & DRIVE 1 — BOITIER D'HELICE TRANSMISSION1

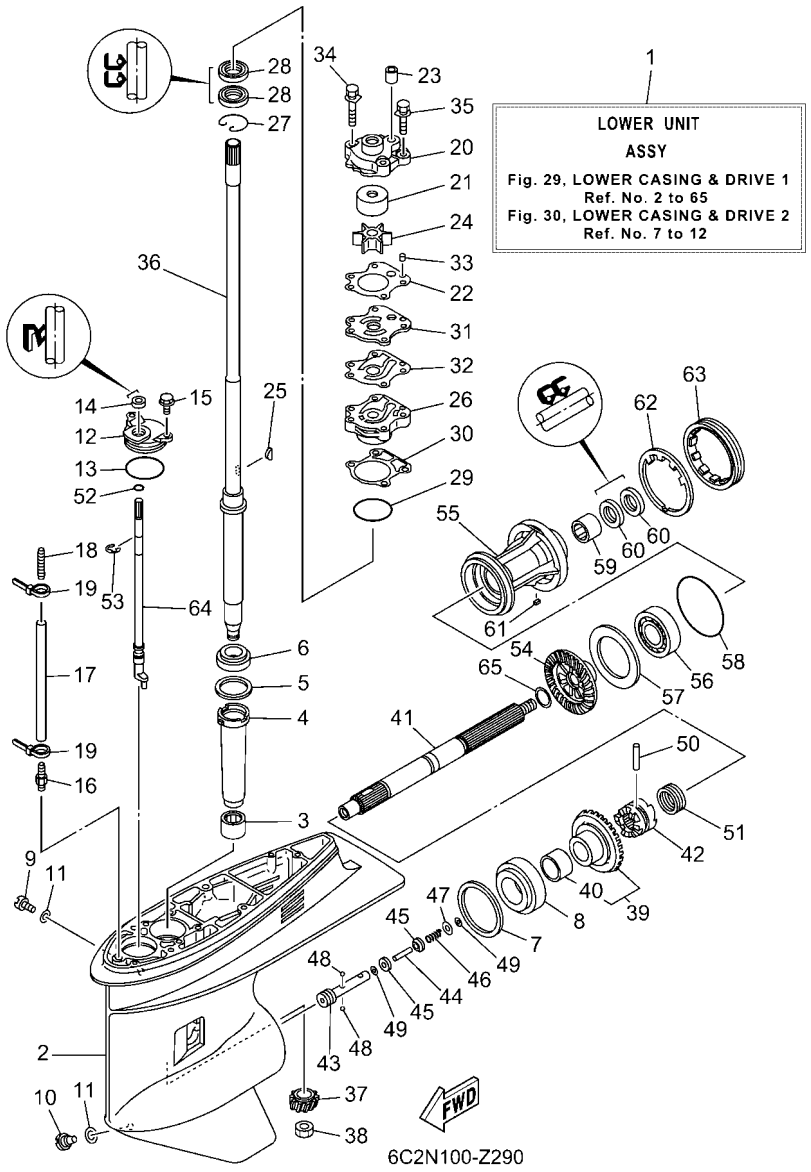


| REF. NO. | PART NO. N° PIECES | DESCRIPTION DESCRIPTION | 6C8P | | | | | REMARKS REMARQUES |
|---|---|---|---|---|---|---|---|---|
| 15 | 97E95–06516 | BOLT, HEXAGON W/W DEEP RECESS<br>VIS HEXAGONAL AVC RONDELLE | 2 | | | | | |
| 16 | 6E5–45378–00 | NIPPLE, HOSE<br>RACCORD, TUYAU | 1 | | | | | |
| 17 | 90445–07ME8 | HOSE (L80)<br>DURITE (L80) | 1 | | | | | L(20.9")<br>L(20.9") |
| | 90445–07M31 | HOSE (L200)<br>DURITE (L200) | 1 | | | | | X(25.4")<br>X(25.4") |
| 18 | 6E5–83558–10 | END, NIPPLE<br>RACCORD DE NIPPLE | 1 | | | | | |
| 19 | 90465–11M10 | CLAMP<br>BRIDE | 2 | | | | | |
| 20 | 6H3–44311–00 | HOUSING, WATER PUMP<br>CORPS, POMPE A EAU | 1 | | | | | |
| 21 | 663–44322–00 | INSERT, CARTRIDGE<br>CUVETTE | 1 | | | | | |
| 22 | 6H3–44315–A0 | GASKET, WATER PUMP<br>JOINT, POMPE A EAU | 1 | | | | | |
| 23 | 663–44366–01 | DAMPER, WATER SEAL 2<br>JOINT, TUBE D'EAU 2 | 1 | | | | | |
| 24 | 6H3–44352–00 | IMPELLER<br>TURBINE | 1 | | | | | |
| 25 | 90280–03M03 | KEY, WOODRUFF<br>CLAVETTE, DEMI-LUNE | 1 | | | | | |
| 26 | 6H3–44341–01–CA | HOUSING, WATER PUMP<br>CORPS, POMPE A EAU | 1 | | | | | |
| 27 | 93450–40165 | CIRCLIP<br>CIRCLIP | 1 | | | | | |
| 28 | 93101–23070 | OIL SEAL<br>JOINT SPY | 2 | | | | | |
| 29 | 93210–46044 | O-RING<br>JOINT TORIQUE | 1 | | | | | |
| 30 | 688–44316–A0 | GASKET, WATER PUMP<br>JOINT, POMPE A EAU | 1 | | | | | |
| 31 | 6H3–44323–00 | OUTER PLATE, CARTRIDGE<br>PLAQUE EXTERIEURE | 1 | | | | | |
| 32 | 6H3–44324–A0 | GASKET, CARTRIDGE<br>JOINT | 1 | | | | | |
| 33 | 93604–10M03 | PIN, DOWEL<br>CLAVETTE | 2 | | | | | |
| 34 | 90119–08194 | BOLT, WITH WASHER<br>BOULON, AVEC RONDELLE | 2 | | | | | |
| 35 | 90119–08191 | BOLT, WITH WASHER<br>BOULON, AVEC RONDELLE | 2 | | | | | |
| 36 | 64J–45501–30 | DRIVE SHAFT COMP.<br>ARBRE MOTEUR COMP. | 1 | | | | | L(20.9")<br>L(20.9") |
| | 64J–45501–40 | DRIVE SHAFT COMP.<br>ARBRE MOTEUR COMP. | 1 | | | | | X(25.4")<br>X(25.4") |
| 37 | 6K5–45551–00 | PINION (12T)<br>PIGNON D'ATTAQUE (12D) | 1 | | | | | |
| 38 | 90170–16M01 | NUT<br>ECROU | 1 | | | | | |
| 39 | 68S–45560–00 | GEAR 1 (28T)<br>PIGNON 1 (28T) | 1 | | | | | |

## FIG. 29 LOWER CASING & DRIVE 1 — BOITIER D'HELICE TRANSMISSION1

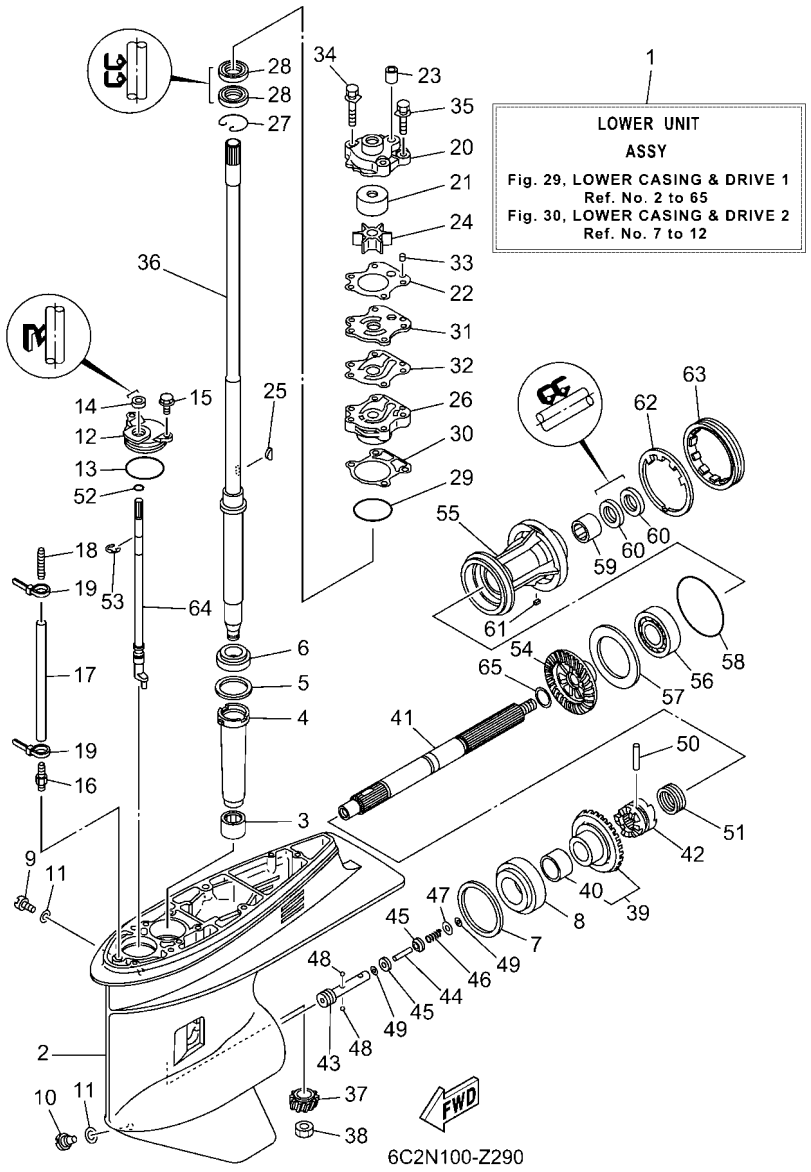


| REF. NO. | PART NO. N° PIECES | DESCRIPTION DESCRIPTION | 6C8P | | | | | REMARKS REMARQUES |
|---|---|---|---|---|---|---|---|---|
| 40 | 93317–322V0 | .BEARING<br>.ROULEMENT | 1 | | | | | |
| 41 | 67F–45611–01 | SHAFT, PROPELLER<br>ARBRE, HELICE | 1 | | | | | |
| 42 | 6D8–45631–00 | CLUTCH, DOG<br>CRABOT | 1 | | | | | |
| 43 | 67F–45634–00 | SLIDE, SHIFT<br>CONTRE-POUSSOIR | 1 | | | | | |
| 44 | 6H1–45668–00 | SHAFT, FREE 1<br>AXE 1 | 1 | | | | | |
| 45 | 6H1–45635–00 | PLUNGER, SHIFT<br>POUSSOIR D'EMBRAYAGE | 2 | | | | | |
| 46 | 90501–12M48 | SPRING, COMPRESSION<br>RESSORT, COMPRESSION | 1 | | | | | |
| 47 | 90201–03313 | WASHER, PLATE<br>RONDELLE, PLATE | 1 | | | | | |
| 48 | 93503–16003 | BALL<br>BILLES | 2 | | | | | |
| 49 | 90183–02M03 | NUT, SPRING<br>ECROU, RESSORT | 2 | | | | | |
| 50 | 90250–07M02 | PIN, STRAIGHT<br>GOUPILLE, DROITE | 1 | | | | | |
| 51 | 688–45633–00 | RING, CROSS PIN<br>JONC, GOUPILLE CRABOT | 1 | | | | | |
| 52 | 93210–07003 | O-RING<br>JOINT TORIQUE | 1 | | | | | |
| 53 | 99001–08600 | CIRCLIP<br>CIRCLIP | 1 | | | | | |
| 54 | 68S–45571–00 | GEAR 2 (28T)<br>PIGNON 2 (28T) | 1 | | | | | |
| 55 | 67F–45331–00–CA | HOUSING, BEARING<br>FLASQUE, ROULEMENT | 1 | | | | | |
| 56 | 93306–207U0 | BEARING<br>ROULEMENT | 1 | | | | | |
| 57 | 67F–45576–00 | WASHER, THRUST 2<br>RONDELLE DE CALAGE 2 | 1 | | | | | |
| 58 | 93210–86M39 | O-RING<br>JOINT TORIQUE | 1 | | | | | |
| 59 | 93317–325U0 | BEARING<br>ROULEMENT | 1 | | | | | |
| 60 | 93101–25M03 | OIL SEAL<br>JOINT SPY | 2 | | | | | |
| 61 | 90282–04010 | KEY, STRAIGHT<br>CLAVETTE, DROITE | 1 | | | | | |
| 62 | 688–45383–02 | WASHER, CLAW<br>FREIN D'ECROU | 1 | | | | | |
| 63 | 688–45384–02 | NUT<br>ECROU | 1 | | | | | |
| 64 | 64J–44150–01 | SHIFT CAM ASSY<br>CAME D'INVERSION | 1 | | | | | |
| 65 | 90201–25M05 | WASHER, PLATE<br>RONDELLE, PLATE | 1 | | | | | |

## FIG. 30 LOWER CASING & DRIVE 2 — BOITIER D'HELICE TRANSMISSION2

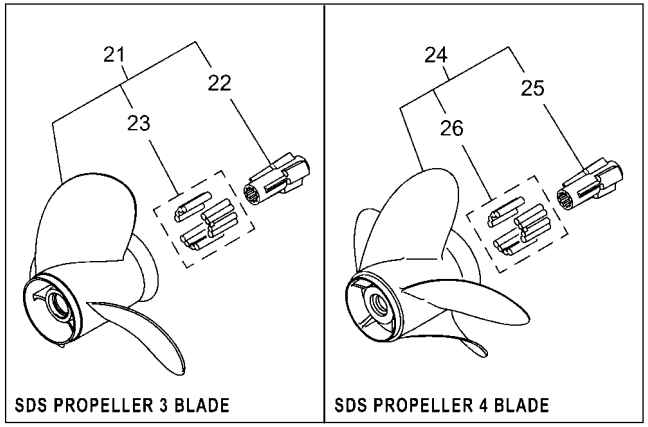


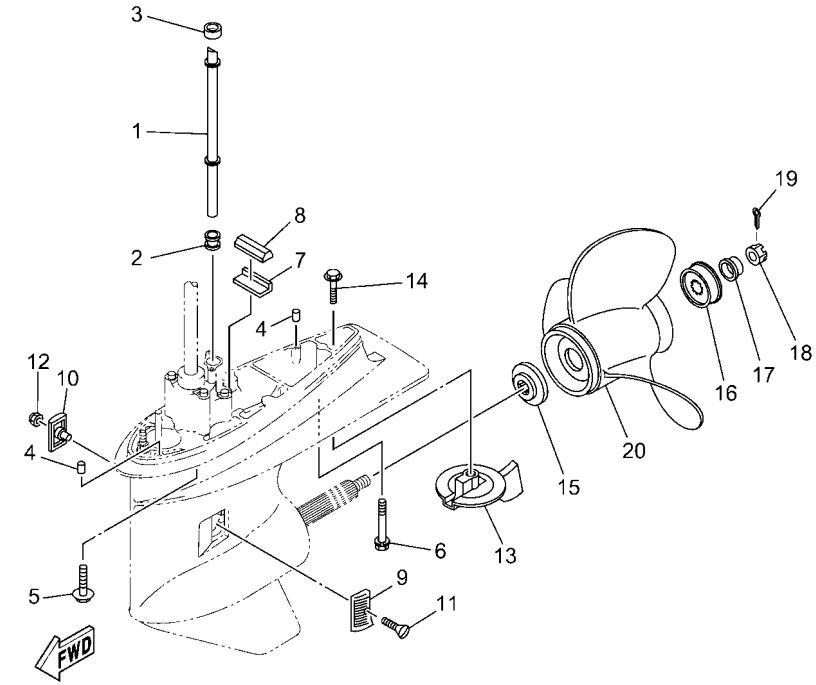


6C2N100-Z300

| REF. NO. | PART NO. N° PIECES | DESCRIPTION DESCRIPTION | 6C8P | | | | | REMARKS REMARQUES |
|---|---|---|---|---|---|---|---|---|
| 1 | 6C5–44361–00 | TUBE, WATER 1<br>TUBE D'EAU 1 | 1 | | | | | L(20.9")<br>L(20.9") |
| | 6C5–44361–10 | TUBE, WATER 1<br>TUBE D'EAU 1 | 1 | | | | | X(25.4")<br>X(25.4") |
| 2 | 663–44367–01 | DAMPER, WATER SEAL 3<br>JOINT TUBE D'EAU 3 | 1 | | | | | |
| 3 | 663–44366–01 | DAMPER, WATER SEAL 2<br>JOINT, TUBE D'EAU 2 | 1 | | | | | |
| 4 | 93606–12019 | PIN, DOWEL<br>GOUPILLE | 2 | | | | | |
| 5 | 90119–10068 | BOLT, WITH WASHER<br>BOULON, AVEC RONDELLE | 4 | | | | | L(20.9")<br>L(20.9") |
| 6 | 90119–08195 | BOLT, WITH WASHER<br>BOULON, AVEC RONDELLE | 1 | | | | | L(20.9")<br>L(20.9") |
| 7 | 663–45376–00 | GUIDE, SEAL DAMPER<br>BUTEE, JOINT CAOUTCHOUC | 1 | | | | | |
| 8 | 688–45375–00 | DAMPER, SEAL<br>BOURRELET, CAOUTCHOUC | 1 | | | | | |
| 9 | 6H1–45214–00 | COVER, WATER INLET 1<br>GRILLE, ENTREE D'EAU 1 | 1 | | | | | |
| 10 | 6H1–45215–00 | COVER, WATER INLET 2<br>GRILLE, ENTREE D'EAU 2 | 1 | | | | | |
| 11 | 90151–05M00 | SCREW, COUNTERSUNK<br>VIS, TETE NOYEE | 1 | | | | | |
| 12 | 90185–05002 | NUT, NYLON<br>ECROU,AUTO-BLOQUANT | 1 | | | | | |
| 13 | 67F–45371–00 | TAB-TRIM<br>ANODE DERIVE | 1 | | | | | |
| 14 | 90105–10M67 | BOLT, FLANGE<br>BOULON, A COLLERETTE | 1 | | | | | |
| 15 | 688–45987–01 | SPACER 1<br>ENTRETOISE 1 | 1 | | | | | |
| 16 | 67F–45997–00 | SPACER 2<br>ENTRETOISE 2 | 1 | | | | | |
| 17 | 90389–25M00 | BUSH<br>DOUILLE | 1 | | | | | |
| 18 | 90171–16011 | NUT, CASTLE<br>ECROU, CRENELE | 1 | | | | | |
| 19 | 91490–30025 | PIN. COTTER<br>GOUPILLE | 1 | | | | | |
| 20 | 6E5–45954–00 | PROPELLER (3X14"X11"-K)<br>HELICE (3X14"X11"-K) | 1 | | | | | UR<br>UR |
| | 6E5–45949–00 | PROPELLER (3X13-5/8"X13"-K)<br>HELICE (3X13-5/8"X13"-K) | 1 | | | | | UR<br>UR |
| | 6E5–45958–00 | PROPELLER (3X13-5/8"X14"-K)<br>HELICE (3X13-5/8"X14"-K) | 1 | | | | | UR<br>UR |
| | 6E5–45947–00 | PROPELLER (3X13-1/2"X15"-K)<br>HELICE (3X13-1/2"X15"-K) | 1 | | | | | UR<br>UR |
| | 6E5–45945–01 | PROPELLER (3X13-1/4"X17"-K)<br>HELICE (3X13-1/4"X17"-K) | 1 | | | | | UR<br>UR |
| | 6E5–45941–00 | PROPELLER (3X13"X19"-K)<br>HELICE (3X13"X19"-K) | 1 | | | | | UR<br>UR |
| | 6E5–45943–00 | PROPELLER (3X12-5/8"X21"-K)<br>HELICE (3X12-5/8"X21"-K) | 1 | | | | | UR<br>UR |

## FIG. 30 LOWER CASING & DRIVE 2 — BOITIER D'HELICE TRANSMISSION2

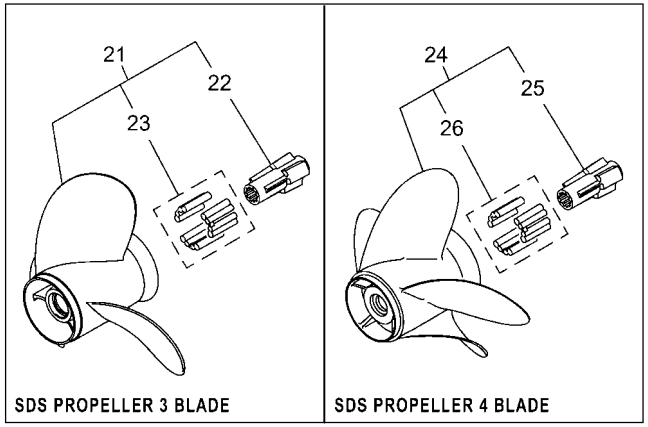


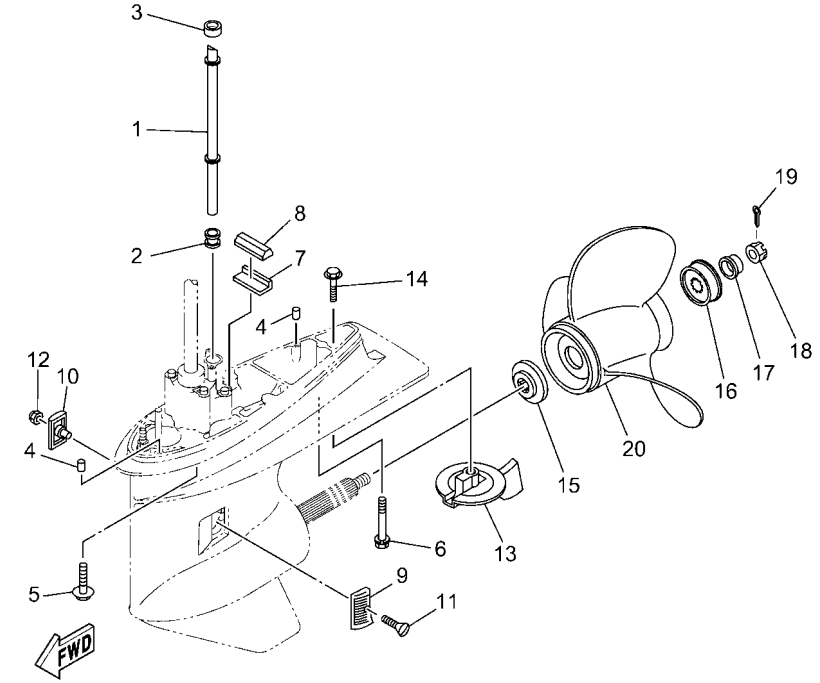


6C2N100-Z300

| REF. NO. | PART NO. N° PIECES | DESCRIPTION DESCRIPTION | 6C8P | | | | | REMARKS REMARQUES |
|---|---|---|---|---|---|---|---|---|
| 20 | 6E5–45952–00 | PROPELLER (3X13"X23"-K)<br>HELICE (3X13"X23"-K) | 1 | | | | | UR<br>UR |
| | 6E5–45956–00 | PROPELLER (3X13"X25"-K)<br>HELICE (3X13"X25"-K) | 1 | | | | | UR<br>UR |
| | 68S–45941–00 | PROPELLER (3X14"X11"-K)<br>HELICE (3X14"X11"-K) | 1 | | | | | UR<br>UR |
| | 688–45932–60 | PROPELLER (3X13-1/2"X14"-K)<br>HELICE (3X13-1/2"X14"-K) | 1 | | | | | UR<br>UR |
| | 688–45978–60 | PROPELLER (3X13-1/2"X16"-K)<br>HELICE (3X13-1/2"X16"-K) | 1 | | | | | UR<br>UR |
| | 688–45930–02 | PROPELLER (3X13"X17"-K2)<br>HELICE (3X13"X17"-K2) | 1 | | | | | UR<br>UR |
| | 688–45970–03 | PROPELLER (3X13"X19"-K)<br>HELICE (3X13"X19"-K) | 1 | | | | | UR<br>UR |
| | 688–45972–02 | PROPELLER (3X13"X21"-K)<br>HELICE (3X13"X21"-K) | 1 | | | | | UR<br>UR |
| | 688–45974–02 | PROPELLER (3X13"X23"-K)<br>HELICE (3X13"X23"-K) | 1 | | | | | UR<br>UR |
| | 688–45976–01 | PROPELLER (3X13"X25"-K)<br>HELICE (3X13"X25"-K) | 1 | | | | | UR<br>UR |
| | 6L6–45930–01 | PROPELLER (3X13"X17"-KL)<br>HELICE (3X13"X17"-KL) | 1 | | | | | UR<br>UR |
| | 6L6–45970–00 | PROPELLER (3X13"X19"-KL)<br>HELICE (3X13"X19"-KL) | 1 | | | | | UR<br>UR |
| | 6L6–45972–00 | PROPELLER (3X13"X21"-KL)<br>HELICE (3X13"X21"-KL) | 1 | | | | | UR<br>UR |
| | 62A–45976–00 | PROPELLER (3X13-1/2"X17"-K)<br>HELICE (3X13-1/2"X17"-K) | 1 | | | | | UR<br>UR |
| | 62A–45974–10 | PROPELLER (3X13-1/2"X19"-K)<br>HELICE (3X13-1/2"X19"-K) | 1 | | | | | UR<br>UR |
| | 62A–45970–10 | PROPELLER (3X13-1/2"X21"-K)<br>HELICE (3X13-1/2"X21"-K) | 1 | | | | | UR<br>UR |
| | 62A–45972–10 | PROPELLER (3X13-1/2"X23"-K)<br>HELICE (3X13-1/2"X23"-K) | 1 | | | | | UR<br>UR |
| 21 | 6EK–45941–00 | PROPELLER (3X13-1/2"X9"-K)<br>HELICE (3X13-1/2"X9"-K) | 1 | | | | | UR SDS 3 BLADE<br>UR SDS 3 BLADE |
| | 6EK–45943–00 | PROPELLER (3X13-1/2"X10-1/2"-K<br>HELICE (3X13-1/2"X10-1/2"-K) | 1 | | | | | UR SDS 3 BLADE<br>UR SDS 3 BLADE |
| | 6EK–45945–00 | PROPELLER (3X13-1/2"X12"-K)<br>HELICE (3X13-1/2"X12"-K) | 1 | | | | | UR SDS 3 BLADE<br>UR SDS 3 BLADE |
| | 6EK–45947–00 | PROPELLER (3X13-1/2"X14"-K)<br>HELICE (3X13-1/2"X14"-K) | 1 | | | | | UR SDS 3 BLADE<br>UR SDS 3 BLADE |
| | 6EK–45949–00 | PROPELLER (3X13-1/2"X16"-K)<br>HELICE (3X13-1/2"X16"-K) | 1 | | | | | UR SDS 3 BLADE<br>UR SDS 3 BLADE |
| | 6FP–45941–00 | PROPELLER (AL 3X13-5/8"X14"-K)<br>HELICE (AL 3X13-5/8"X14"-K) | 1 | | | | | UR SDS 3 BLADE<br>UR SDS 3 BLADE |
| | 6FP–45943–00 | PROPELLER (AL 3X13-1/2"X15"-K)<br>HELICE (AL 3X13-1/2"X15"-K) | 1 | | | | | UR SDS 3 BLADE<br>UR SDS 3 BLADE |
| | 6FP–45945–00 | PROPELLER (AL 3X13-1/4"X16"-K)<br>HELICE (AL 3X13-1/4"X16"-K) | 1 | | | | | UR SDS 3 BLADE<br>UR SDS 3 BLADE |
| | 6FP–45947–00 | PROPELLER (AL 3X13-1/8"X17"-K)<br>HELICE (AL 3X13-1/8"X17"-K) | 1 | | | | | UR SDS 3 BLADE<br>UR SDS 3 BLADE |
| | 6FP–45949–00 | PROPELLER (AL 3X13"X18"-K)<br>HELICE (AL 3X13"X18"-K) | 1 | | | | | UR SDS 3 BLADE<br>UR SDS 3 BLADE |

## FIG. 30 LOWER CASING & DRIVE 2 — BOITIER D'HELICE TRANSMISSION2

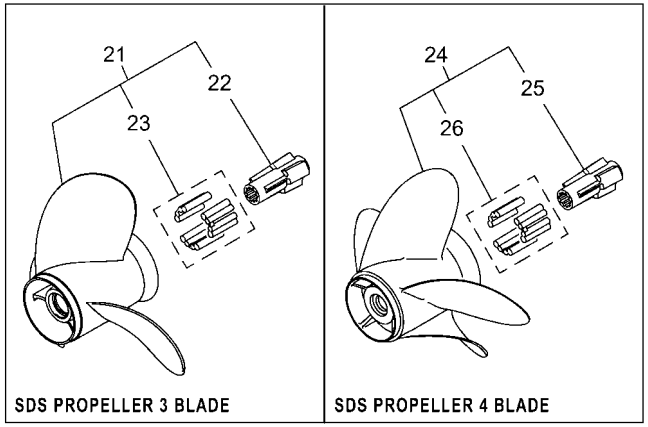


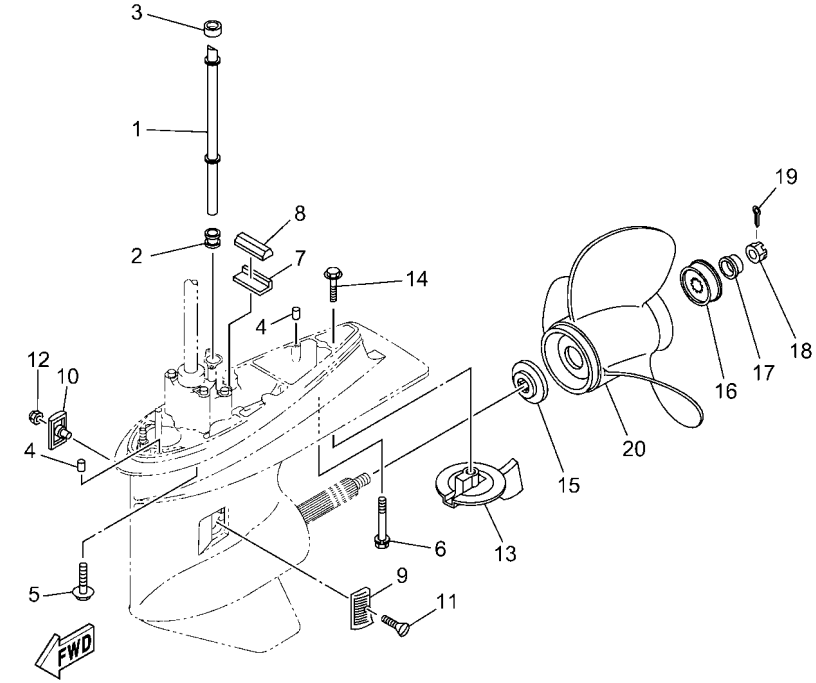


6C2N100-Z300

| REF. NO. | PART NO. N° PIECES | DESCRIPTION DESCRIPTION | 6C8P | | | | | REMARKS REMARQUES |
|---|---|---|---|---|---|---|---|---|
| 21 | 6N7–45970–00 | PROPELLER (3X13-1/8"X14"-K)<br>HELICE (3X13-1/8"X14"-K) | 1 | | | | | UR SDS 3 BLADE<br>UR SDS 3 BLADE |
| | 6N7–45972–00 | PROPELLER (3X13-1/8"X16"-K)<br>HELICE (3X13-1/8"X16"-K) | 1 | | | | | UR SDS 3 BLADE<br>UR SDS 3 BLADE |
| | 6N7–45974–00 | PROPELLER (3X13-1/8"X18"-K)<br>HELICE (3X13-1/8"X18"-K) | 1 | | | | | UR SDS 3 BLADE<br>UR SDS 3 BLADE |
| | 6N7–45976–00 | PROPELLER (3X13-1/8"X19"-K)<br>HELICE (3X13-1/8"X19"-K) | 1 | | | | | UR SDS 3 BLADE<br>UR SDS 3 BLADE |
| | 6N7–45978–00 | PROPELLER (3X13-1/8"X20"-K)<br>HELICE (3X13-1/8"X20"-K) | 1 | | | | | UR SDS 3 BLADE<br>UR SDS 3 BLADE |
| | 6N7–45930–00 | PROPELLER (3X13-1/8"X22"-K)<br>HELICE (3X13-1/8"X22"-K) | 1 | | | | | UR SDS 3 BLADE<br>UR SDS 3 BLADE |
| | 6N7–45932–00 | PROPELLER (3X13-1/8"X24"-K)<br>HELICE (3X13-1/8"X24"-K) | 1 | | | | | UR SDS 3 BLADE<br>UR SDS 3 BLADE |
| | 6N4–45970–00 | PROPELLER (3X13-1/8"X14"-KL)<br>HELICE (3X13-1/8"X14"-KL) | 1 | | | | | UR SDS 3 BLADE<br>UR SDS 3 BLADE |
| | 6N4–45972–00 | PROPELLER (3X13-1/8"X16"-KL)<br>HELICE (3X13-1/8"X16"-KL) | 1 | | | | | UR SDS 3 BLADE<br>UR SDS 3 BLADE |
| | 6N4–45974–00 | PROPELLER (3X13-1/8"X18"-KL)<br>HELICE (3X13-1/8"X18"-KL) | 1 | | | | | UR SDS 3 BLADE<br>UR SDS 3 BLADE |
| | 6N4–45978–00 | PROPELLER (3X13-1/8"X20"-KL)<br>HELICE (3X13-1/8"X20"-KL) | 1 | | | | | UR SDS 3 BLADE<br>UR SDS 3 BLADE |
| | 6H1–45970–00 | PROPELLER (3X14"X9"-K)<br>HELICE (3X14"X9"-K) | 1 | | | | | UR SDS 3 BLADE<br>UR SDS 3 BLADE |
| | 6H1–45972–00 | PROPELLER (3X14"X10"-K)<br>HELICE (3X14"X10"-K) | 1 | | | | | UR SDS 3 BLADE<br>UR SDS 3 BLADE |
| | 6H1–45974–00 | PROPELLER (3X14"X11"-K)<br>HELICE (3X14"X11"-K) | 1 | | | | | UR SDS 3 BLADE<br>UR SDS 3 BLADE |
| | 6H1–45976–00 | PROPELLER (3X14"X12"-K)<br>HELICE (3X14"X12"-K) | 1 | | | | | UR SDS 3 BLADE<br>UR SDS 3 BLADE |
| | 6H1–45978–00 | PROPELLER (3X14"X13"-K)<br>HELICE (3X14"X13"-K) | 1 | | | | | UR SDS 3 BLADE<br>UR SDS 3 BLADE |
| 22 | 6EK–45982–00 | .BUSH, PROPELLER<br>.DOUILLE DE HELICE | 1 | | | | | |
| 23 | 6EK–45C82–09 | .DAMPER RUBBER, PROPELLER 2<br>.AMORTISSEUR HELICE 2 | 1 | | | | | |
| 24 | 6N6–45B70–00 | PROPELLER (4X13-1/4"X14"-X)<br>HELICE (4X13-1/4"X14"-X) | 1 | | | | | UR SDS 4 BLADE<br>UR SDS 4 BLADE |
| | 6N6–45B72–00 | PROPELLER (4X13-1/4"X16"-X)<br>HELICE (4X13-1/4"X16"-X) | 1 | | | | | UR SDS 4 BLADE<br>UR SDS 4 BLADE |
| | 6N6–45B74–00 | PROPELLER (4X13-1/4"X18"-X)<br>HELICE (4X13-1/4"X18"-X) | 1 | | | | | UR SDS 4 BLADE<br>UR SDS 4 BLADE |
| 25 | 6EK–45982–00 | .BUSH, PROPELLER<br>.DOUILLE DE HELICE | 1 | | | | | |
| 26 | 6EK–45C82–09 | .DAMPER RUBBER, PROPELLER 2<br>.AMORTISSEUR HELICE 2 | 1 | | | | | |

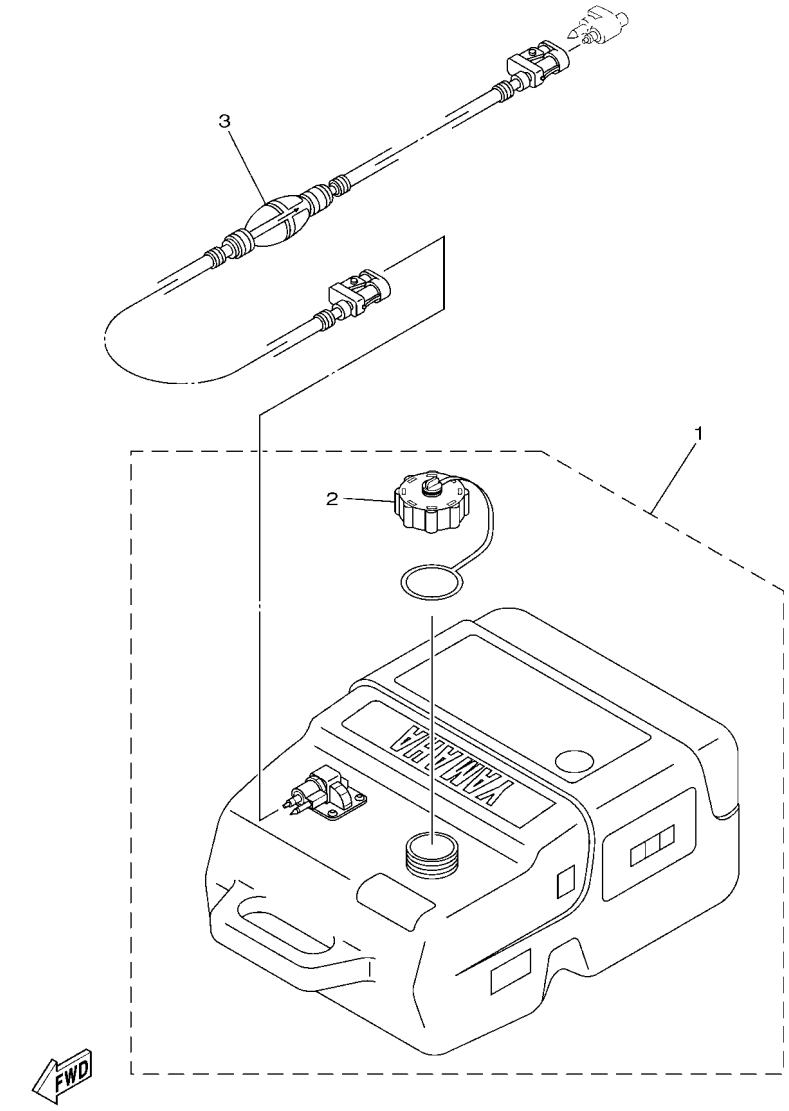


6FM1100-R370

## FIG. 31 FUEL TANK — RESERVOIR A CARBURANT

| REF. NO. | PART NO. N° PIECES | DESCRIPTION DESCRIPTION | 6C8P | | | | | REMARKS REMARQUES |
|---|---|---|---|---|---|---|---|---|
| 1 | 6YK–24201–44 | FUEL TANK ASSY (25L)<br>RESERVOIR A ESSENCE (ENS.) 25L | 1 | | | | | AP<br>AP |
| 2 | 6YL–24610–10 | .CAP ASSY<br>.BOUCHON | 1 | | | | | |
| 3 | 6YK–24306–64 | FUEL PIPE COMP. 1<br>DURITE A ESSENCE 1 | 1 | | | | | AP<br>AP |

## FIG. 32 STEERING GUIDE — FIXATION DE DIRECTION

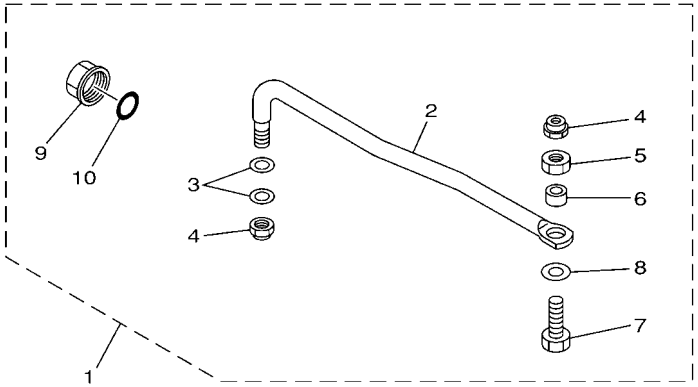


65W0010-8210

| REF. NO. | PART NO. N° PIECES | DESCRIPTION DESCRIPTION | 6C8P | | | | | REMARKS REMARQUES |
|---|---|---|---|---|---|---|---|---|
| 1 | 65W–61350–00 | STEERING GUIDE ATTACHMENT KIT<br>FIXATIONS DE DIRECTION | 1 | | | | | AP<br>AP |
| 2 | 65W–61351–00 | .ROD, STEERING LINK<br>.RENVOI DE DIRECTION | 1 | | | | | |
| 3 | 90201–10M20 | .WASHER, PLATE<br>.RONDELLE, PLATE | 2 | | | | | |
| 4 | 90185–09M01 | .NUT, SELF-LOCKING<br>.ECROU,AUTO-BLOQUANT | 2 | | | | | |
| 5 | 90170–09M03 | .NUT<br>.ECROU | 1 | | | | | |
| 6 | 90387–10M42 | .COLLAR<br>.COLLERETTE | 1 | | | | | |
| 7 | 90101–09M01 | .BOLT<br>.BOULON | 1 | | | | | |
| 8 | 90201–10081 | .WASHER, PLATE<br>.RONDELLE, PLATE | 1 | | | | | |
| 9 | 6E5–43145–01 | .CAP, CLAMP BRACKET<br>.CAPUCHON, PRESSE | 1 | | | | | |
| 10 | 93210–16275 | .O-RING<br>.JOINT TORIQUE | 1 | | | | | |

## FIG. 33 OPTIONAL PARTS 1 — PIECES OPTIONNELLES 1

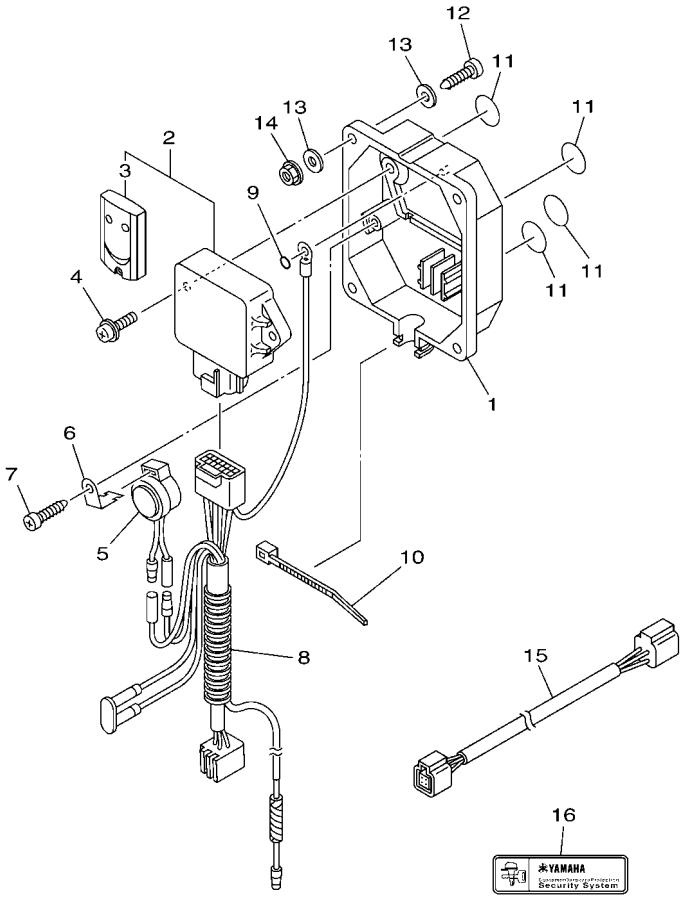


6CJ1100-K370

| REF. NO. | PART NO. N° PIECES | DESCRIPTION DESCRIPTION | 6C8P | | | | | REMARKS REMARQUES |
|---|---|---|---|---|---|---|---|---|
| 1 | 6Y8–86267–00 | CASE COMPLETE 1<br>CARTER (ENS.) 1 | 1 | | | | | |
| 2 | 6Y8–86260–03 | REMOTE CONTROL UNIT ASSY<br>UNITE DE TELECOMMANDE (ENS.) | 1 | | | | | |
| 3 | 6AA–86261–01 | .XMTR. COMP.<br>.XMTR. COMP. | 2 | | | | | |
| 4 | 97980–06216 | SCREW, WITH WASHER<br>VIS, AVEC RONDELLE | 2 | | | | | |
| 5 | 6X4–83383–00 | BUZZER<br>RONFLEUR | 1 | | | | | |
| 6 | 6X4–83386–00 | STAY, BUZZER<br>SUPPOR, RONFLEUR | 1 | | | | | |
| 7 | 97780–60620 | SCREW, TAPPING<br>VIS, TETE BOMBEE | 1 | | | | | |
| 8 | 6Y8–82509–10 | WIRE, SUB LEAD<br>FIL, SECONDAIRE | 1 | | | | | |
| 9 | 93210–04279 | O-RING<br>JOINT TORIQUE | 1 | | | | | |
| 10 | 90465–11M10 | CLAMP<br>BRIDE | 1 | | | | | |
| 11 | 6Y8–8454G–00 | PATCH 1<br>TAMPON 1 | 4 | | | | | |
| 12 | 90167–06M00 | SCREW, TAPPING<br>VIS, TETE FRAISEE | 4 | | | | | UR<br>UR |
| | 97880–06035 | SCREW, PAN HEAD<br>VIS, TETE TRONCONIQUE | 4 | | | | | UR<br>UR |
| 13 | 90201–06M30 | WASHER, PLATE<br>RONDELLE, PLATE | 8 | | | | | |
| 14 | 95780–06300 | NUT, FLANGE<br>ECROU | 4 | | | | | |
| 15 | 6Y8–82521–11 | 2FT PIGTAIL BUS<br>FAISCEAU (L: 2FT.) | 1 | | | | | |
| 16 | 6Y8–48277–00 | STICKER 1<br>ETIQUETTE 1 | 4 | | | | | |

## FIG. 34 OPTIONAL PARTS 2 — PIECES OPTIONNELLES 2

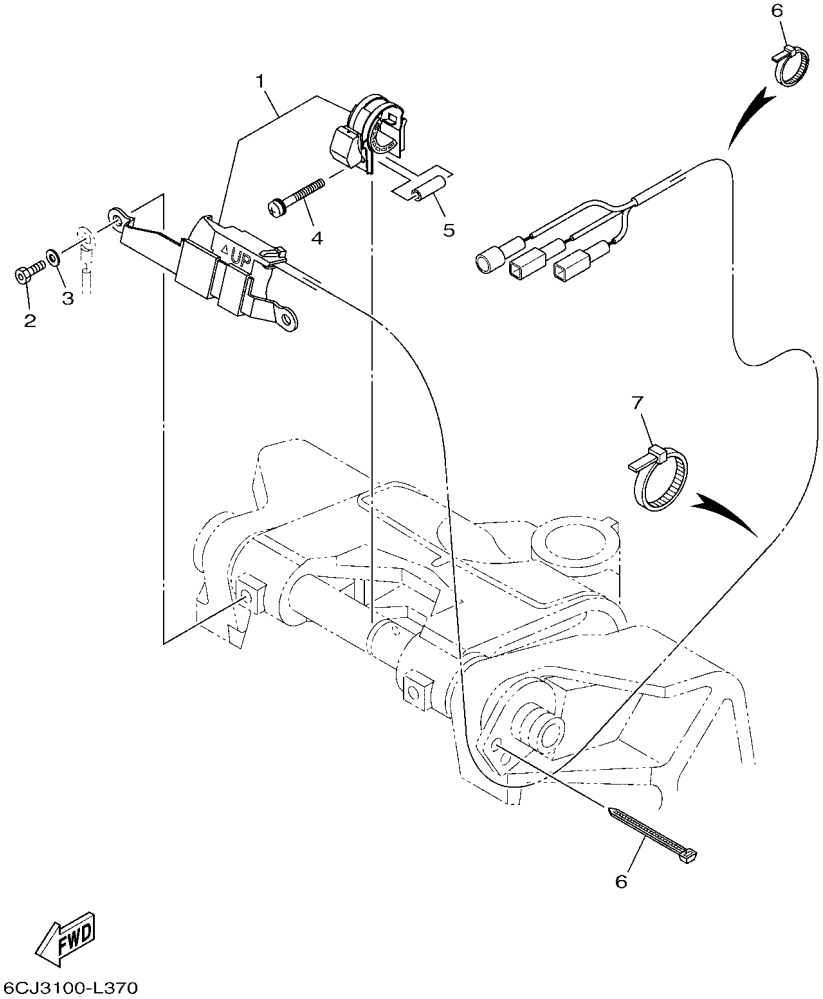


| REF. NO. | PART NO. N° PIECES | DESCRIPTION DESCRIPTION | 6C8P | | | | | REMARKS REMARQUES |
|---|---|---|---|---|---|---|---|---|
| 1 | 6C5–825E0–01 | TILT LIMIT SWITCH ASSY<br>COMMUTATEUR, LIMIT INCLINAISON | 1 | | | | | |
| 2 | 90109–06M88 | BOLT<br>BOULON | 2 | | | | | |
| 3 | 92990–06100 | WASHER, SPRING<br>RONDELLE, GROWER | 2 | | | | | |
| 4 | 90159–05059 | SCREW, WITH WASHER<br>VIS, AVEC RONDELLE | 1 | | | | | |
| 5 | 90387–05004 | COLLAR<br>COLLERETTE | 1 | | | | | |
| 6 | 90465–11M10 | CLAMP<br>BRIDE | 5 | | | | | |
| 7 | 90465–13M18 | CLAMP<br>BRIDE | 3 | | | | | |

## FIG. 35 REPAIR KIT 1 — KITS DE REPARATION 1

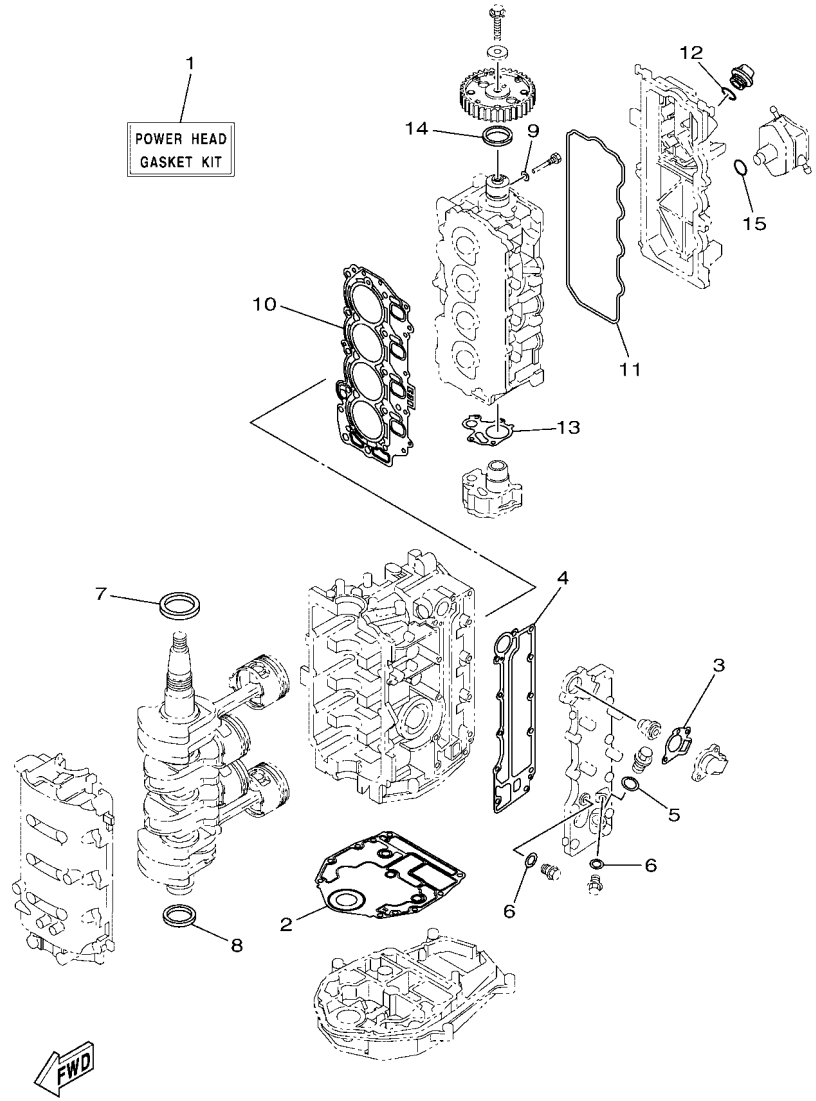


6C1J110-V340

| REF. NO. | PART NO. N° PIECES | DESCRIPTION DESCRIPTION | 6C8P | | | | | REMARKS REMARQUES |
|---|---|---|---|---|---|---|---|---|
| 1 | 6C5–W0001–05 | POWER HEAD GASKET KIT<br>POCHETTE DE JINTS TETE MOTRICE | 1 | | | | | |
| 2 | 6BG–11351–02 | .GASKET, CYLINDER<br>.JOINT, D'EMBASE | 1 | | | | | |
| 3 | 62Y–12414–01 | .GASKET, COVER<br>.JOINT, COUVERCLE | 1 | | | | | |
| 4 | 6C5–41114–10 | .GASKET, EXHAUST OUTER COVER<br>.JOINT, COUVERCLE D'ECHAPPEMENT | 1 | | | | | |
| 5 | 90201–186F1 | .WASHER, PLATE<br>.RONDELLE, PLATE | 1 | | | | | |
| 6 | 90430–14115 | .GASKET<br>.JOINT | 2 | | | | | |
| 7 | 93102–43M42 | .OIL SEAL<br>.JOINT SPY | 1 | | | | | |
| 8 | 93101–35002 | .OIL SEAL<br>.JOINT SPY | 1 | | | | | |
| 9 | 90430–06014 | .GASKET<br>.JOINT | 1 | | | | | |
| 10 | 6C5–11181–01 | .GASKET, CYLINDER HEAD 1<br>.JOINT, DE CULASSE 1 | 1 | | | | | |
| 11 | 62Y–11356–00 | .SEAL, CYLINDER 2<br>.JOINT, SPY CYLINDRE | 1 | | | | | |
| 12 | 93210–24M79 | .O-RING<br>.JOINT TORIQUE | 1 | | | | | |
| 13 | 6C5–13329–00 | .GASKET, PUMP COVER<br>.JOINT, COUVERCLE DE POMPE | 1 | | | | | |
| 14 | 93102–37M40 | .OIL SEAL<br>.JOINT SPY | 1 | | | | | |
| 15 | 93210–24M79 | .O-RING<br>.JOINT TORIQUE | 1 | | | | | |

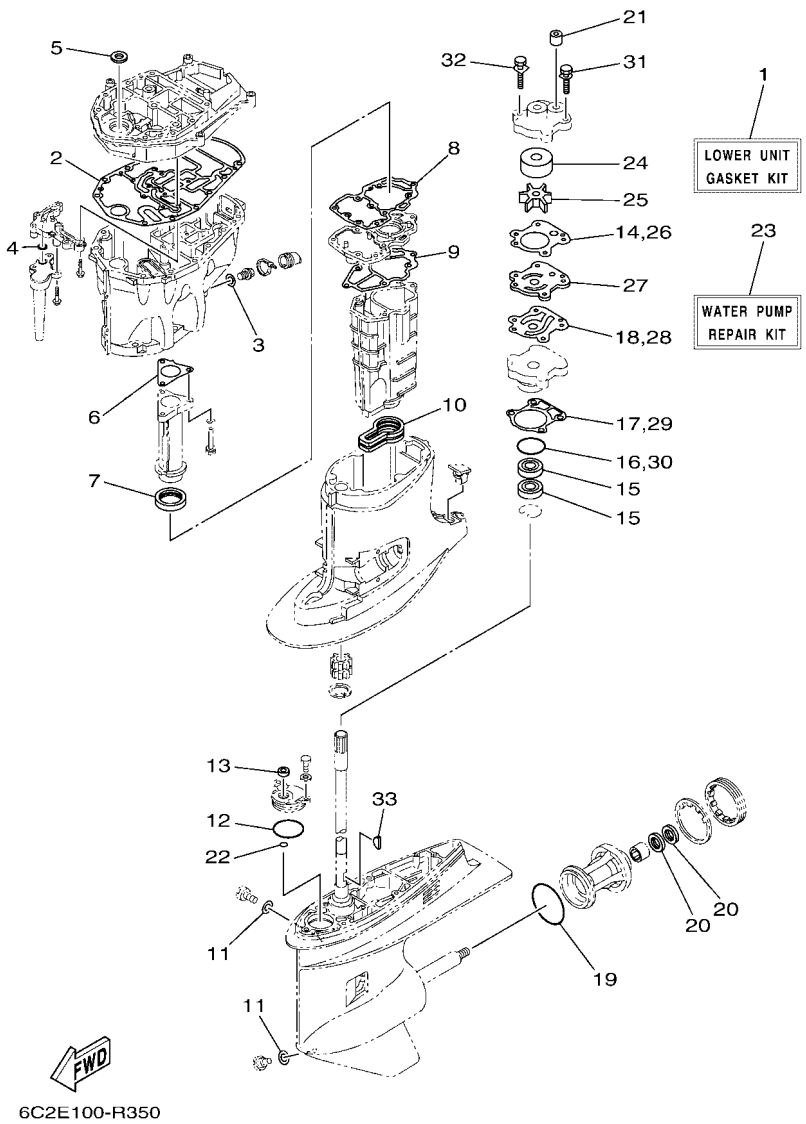


## FIG. 36 REPAIR KIT 2 — KITS DE REPARATION 2

| REF. NO. | PART NO. N° PIECES | DESCRIPTION DESCRIPTION | 6C8P | | | | | REMARKS REMARQUES |
|---|---|---|---|---|---|---|---|---|
| 1 | 6C6–W0001–22 | LOWER UNIT GASKET KIT<br>POCHETTE DE JOINTS EMBASE | 1 | | | | | |
| 2 | 6C5–15312–01 | .GASKET, OIL PAN<br>.JOINT DE VENTILATEUR D'HUILE | 1 | | | | | |
| 3 | 90430–14M09 | .GASKET<br>.JOINT | 1 | | | | | |
| 4 | 93210–12790 | .O-RING<br>.JOINT TORIQUE | 1 | | | | | |
| 5 | 93103–18011 | .OIL SEAL<br>.JOINT SPY | 1 | | | | | |
| 6 | 6C5–41133–00 | .GASKET, EXHAUST MANIFOLD 1<br>.JOINT, PIPE D'ECHAPPEMENT | 1 | | | | | |
| 7 | 6C5–46132–00 | .GASKET 1<br>.JOINT 1 | 1 | | | | | |
| 8 | 6C5–41134–00 | .GASKET, EXHAUST MANIFOLD 2<br>.JOINT, PIPE D'ECHAPPEMENT 2 | 1 | | | | | |
| 9 | 6C5–41135–00 | .GASKET, EXHAUST MANIFOLD<br>.JOINT, PIPE D'ECHAPPEMENT | 1 | | | | | |
| 10 | 6C5–45123–00 | .GASKET, MUFFLER<br>.JOINT, POT DE DETENTE | 1 | | | | | |
| 11 | 90430–08003 | .GASKET<br>.JOINT | 2 | | | | | |
| 12 | 93210–49046 | .O-RING<br>.JOINT TORIQUE | 1 | | | | | |
| 13 | 93106–09014 | .OIL SEAL<br>.JOINT SPY | 1 | | | | | |
| 14 | 6H3–44315–A0 | .GASKET, WATER PUMP<br>.JOINT, POMPE A EAU | 1 | | | | | |
| 15 | 93101–23070 | .OIL SEAL<br>.JOINT SPY | 2 | | | | | |
| 16 | 93210–46044 | .O-RING<br>.JOINT TORIQUE | 1 | | | | | |
| 17 | 688–44316–A0 | .GASKET, WATER PUMP<br>.JOINT, POMPE A EAU | 1 | | | | | |
| 18 | 6H3–44324–A0 | .GASKET, CARTRIDGE<br>.JOINT | 1 | | | | | |
| 19 | 93210–86M39 | .O-RING<br>.JOINT TORIQUE | 1 | | | | | |
| 20 | 93101–25M03 | .OIL SEAL<br>.JOINT SPY | 2 | | | | | |
| 21 | 663–44366–01 | .DAMPER, WATER SEAL 2<br>.JOINT, TUBE D'EAU 2 | 1 | | | | | |
| 22 | 93210–07003 | .O-RING<br>.JOINT TORIQUE | 1 | | | | | |
| 23 | 6H3–W0078–02 | WATER PUMP REPAIR KIT<br>KIT DE REPARATION DE LA POMPE | 1 | | | | | |
| 24 | 663–44322–00 | .INSERT, CARTRIDGE<br>.CUVETTE | 1 | | | | | |
| 25 | 6H3–44352–00 | .IMPELLER<br>.TURBINE | 1 | | | | | |
| 26 | 6H3–44315–A0 | .GASKET, WATER PUMP<br>.JOINT, POMPE A EAU | 1 | | | | | |
| 27 | 6H3–44323–00 | .OUTER PLATE, CARTRIDGE<br>.PLAQUE EXTERIEURE | 1 | | | | | |

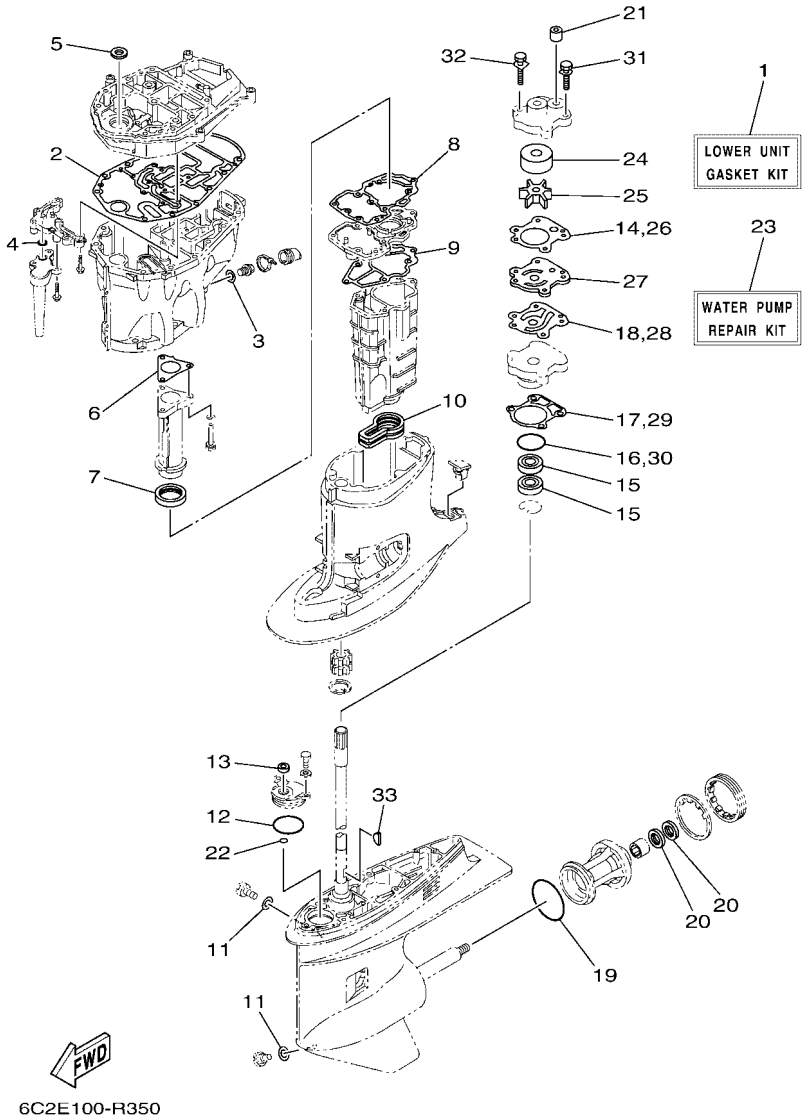


## FIG. 36 REPAIR KIT 2 — KITS DE REPARATION 2

| REF. NO. | PART NO. N° PIECES | DESCRIPTION DESCRIPTION | 6C8P | | | | | REMARKS REMARQUES |
|---|---|---|---|---|---|---|---|---|
| 28 | 6H3–44324–A0 | .GASKET, CARTRIDGE<br>.JOINT | 1 | | | | | |
| 29 | 688–44316–A0 | .GASKET, WATER PUMP<br>.JOINT, POMPE A EAU | 1 | | | | | |
| 30 | 93210–46044 | .O-RING<br>.JOINT TORIQUE | 1 | | | | | |
| 31 | 90119–08191 | .BOLT, WITH WASHER<br>.BOULON, AVEC RONDELLE | 2 | | | | | |
| 32 | 90119–08194 | .BOLT, WITH WASHER<br>.BOULON, AVEC RONDELLE | 2 | | | | | |
| 33 | 90280–03M03 | .KEY, WOODRUFF<br>.CLAVETTE, DEMI-LUNE | 1 | | | | | |

| PART NO. N° PIECES | REF. NO. |
|---|---|
| 6C5–11111–20–9S | 5 – 2 |
| 62Y–11119–00 | 5 – 28 |
| 6CJ–11119–00 | 5 – 20 |
| 62Y–11133–31 | 5 – 3 |
| 6C5–11168–00 | 5 – 16 |
| 6C5–11181–01 | 5 – 10 |
| | 35 – 10 |
| 6C5–11191–02–9S | 5 – 14 |
| 6G8–11197–B0 | 5 – 6 |
| 62Y–11325–00 | 1 – 3 |
| | 3 – 17 |
| 6G8–11325–00 | 1 – 5 |
| | 5 – 4 |
| 66M–11327–00–94 | 3 – 19 |
| 66M–11328–01 | 3 – 18 |
| 6BG–11351–02 | 3 – 7 |
| | 35 – 2 |
| 62Y–11356–00 | 5 – 18 |
| | 35 – 11 |
| 6CJ–11372–00 | 9 – 2 |
| 6C5–11411–11 | 4 – 1 |
| 6BG–11416–00 | 4 – 2 |
| 6BG–11416–10 | 4 – 2 |
| 6BG–11416–20 | 4 – 2 |
| 6BG–11416–30 | 4 – 2 |
| 6C5–11536–00 | 12 – 7 |
| 6C5–11537–10 | 12 – 2 |
| 6H4–11545–00 | 14 – 9 |
| 62Y–11557–00 | 12 – 8 |
| 67C–11603–01 | 4 – 7 |
| 67C–11604–01 | 4 – 7 |
| 67C–11605–01 | 4 – 7 |
| 69W–11631–01–97 | 4 – 6 |
| 62Y–11633–00 | 4 – 8 |
| 69W–11635–01 | 4 – 6 |
| 69W–11636–01 | 4 – 6 |
| 6C5–11650–11 | 4 – 3 |
| 6C5–11654–00 | 4 – 4 |
| 6CJ–11656–01 | 4 – 5 |
| 6CJ–11656–11 | 4 – 5 |
| 6CJ–11656–21 | 4 – 5 |
| 6CJ–11656–31 | 4 – 5 |
| 69W–12111–00 | 6 – 1 |
| 51Y–12114–00 | 6 – 4 |
| 62Y–12116–00 | 6 – 3 |
| 30X–12117–00 | 6 – 5 |
| 30X–12118–00 | 6 – 6 |
| 51Y–12119–00 | 6 – 7 |

| PART NO. N° PIECES | REF. NO. |
|---|---|
| 69W–12121–10 | 6 – 2 |
| 6C5–12146–00 | 6 – 8 |
| 6C5–12151–00 | 6 – 12 |
| 62Y–12151–01 | 6 – 9 |
| 62Y–12158–00 | 6 – 11 |
| 6C5–12158–00 | 6 – 14 |
| 64J–12159–00 | 6 – 10 |
| 6C5–12159–00 | 6 – 13 |
| 6C5–12171–00 | 12 – 1 |
| 6C5–12231–00 | 6 – 15 |
| 6C5–12233–00 | 6 – 16 |
| 6C5–12241–00 | 6 – 17 |
| 6C5–12243–00 | 6 – 18 |
| 6G8–12411–03 | 1 – 1 |
| | 3 – 11 |
| 688–12412–00 | 3 – 12 |
| 6C5–12413–00–9S | 3 – 13 |
| 62Y–12414–01 | 1 – 2 |
| | 3 – 14 |
| | 35 – 3 |
| 6BG–12481–00 | 21 – 14 |
| 62Y–12481–10 | 3 – 10 |
| 66M–12535–00 | 3 – 20 |
| 6AW–12572–00 | 21 – 6 |
| 6CJ–12576–00 | 9 – 6 |
| 6R3–12580–01 | 21 – 8 |
| 6C5–12858–A0 | 3 – 28 |
| 62Y–13131–00 | 13 – 28 |
| 6C5–13132–00 | 10 – 28 |
| 6C5–13161–00 | 7 – 10 |
| 6C5–13300–01 | 12 – 11 |
| 6C5–13329–00 | 12 – 12 |
| | 35 – 13 |
| 6CJ–13411–10 | 28 – 8 |
| 6C5–13428–01 | 8 – 16 |
| 6C5–13437–64 | 14 – 20 |
| 5GH–13440–90 | 1 – 4 |
| | 3 – 27 |
| 6C5–13542–00 | 11 – 3 |
| 6CJ–13543–10 | 9 – 4 |
| 6C5–13545–00 | 11 – 19 |
| 6C5–13546–00 | 11 – 2 |
| 6C5–13547–00 | 11 – 20 |
| 6C5–13548–00 | 11 – 24 |
| 6C5–13557–00 | 7 – 4 |
| 6C5–13577–00 | 11 – 11 |
| 6C5–13593–10 | 10 – 20 |
| 6CJ–13641–01 | 7 – 2 |

| PART NO. N° PIECES | REF. NO. |
|---|---|
| 6C5–13645–00 | 7 – 3 |
| 6C5–13713–02 | 9 – 1 |
| 6C5–13716–10 | 10 – 22 |
| 6C5–13739–00 | 11 – 1 |
| 6CJ–13750–01 | 7 – 5 |
| 6C5–13761–00 | 7 – 13 |
| 6C5–13781–00 | 10 – 21 |
| 6C5–13781–10 | 10 – 29 |
| 6C5–13906–02 | 10 – 9 |
| 6FP–13907–01 | 10 – 17 |
| 6C5–13907–10 | 10 – 16 |
| 6C5–13915–01 | 1 – 7 |
| | 10 – 19 |
| 6C5–13974–00 | 11 – 16 |
| 6C5–1410B–00 | 7 – 14 |
| 6C5–1410F–00 | 11 – 23 |
| 6C5–14127–10 | 10 – 18 |
| 6C5–14148–20 | 11 – 14 |
| 6BG–14149–00 | 11 – 9 |
| 6C5–14180–60 | 10 – 1 |
| 6C5–14182–20 | 10 – 2 |
| 6C5–14191–00 | 10 – 13 |
| 6CJ–14200–02 | 7 – 1 |
| 6C5–14225–00 | 10 – 25 |
| 6C5–14251–00 | 11 – 13 |
| 6C5–14386–00 | 10 – 5 |
| 6C5–14397–00 | 10 – 14 |
| 6C5–14440–10 | 8 – 4 |
| 6C5–14446–00 | 7 – 12 |
| 6C5–14453–02 | 8 – 5 |
| 62Y–14485–00 | 5 – 15 |
| 6C5–14496–00 | 7 – 9 |
| 6C5–14546–10 | 10 – 4 |
| 6C5–14567–00 | 10 – 15 |
| 6C5–14711–00–CA | 27 – 12 |
| 6C5–14960–20 | 10 – 12 |
| 6C5–14984–10 | 1 – 8 |
| | 10 – 23 |
| 6C5–14985–00 | 10 – 3 |
| 6CJ–14987–00 | 21 – 9 |
| 6C5–15100–12 | 3 – 2 |
| 6C5–15311–02 | 28 – 1 |
| 6C5–15312–01 | 28 – 2 |
| | 36 – 2 |
| 6CJ–15316–01 | 28 – 4 |
| 6C5–1531A–20 | 9 – 13 |
| 6CJ–15333–10 | 28 – 10 |
| 6C5–15362–00 | 28 – 12 |

| PART NO. N° PIECES | REF. NO. |
|---|---|
| 6G8–15363–00 | 5 – 22 |
| 6C5–15378–00 | 5 – 24 |
| 6C5–15378–11 | 5 – 26 |
| 6C5–21337–10 | 10 – 24 |
| 6CJ–2153A–00 | 2 – 18 |
| 6C5–21841–01 | 11 – 12 |
| 6C5–22435–00 | 25 – 20 |
| 6CJ–22471–10 | 25 – 13 |
| 6CJ–24135–00 | 21 – 20 |
| 6BG–24136–01 | 21 – 18 |
| 6YK–24201–44 | 31 – 1 |
| 6C5–24251–01 | 1 – 9 |
| | 11 – 21 |
| 6G1–24304–11 | 13 – 1 |
| 6YK–24306–64 | 31 – 3 |
| 6C5–24311–00 | 13 – 22 |
| 6C5–24313–20 | 13 – 3 |
| 6C5–24321–20 | 11 – 4 |
| 6C5–24322–20 | 11 – 5 |
| 6BG–24323–00 | 11 – 6 |
| 6CJ–24324–00 | 11 – 7 |
| 6CJ–24325–00 | 11 – 8 |
| 6BG–24329–01 | 20 – 25 |
| 62Y–24374–01 | 13 – 33 |
| 67F–24377–00 | 13 – 4 |
| 688–24378–00 | 21 – 10 |
| | 21 – 13 |
| 6C5–24379–00 | 11 – 18 |
| 6C5–24387–00 | 11 – 15 |
| 6C5–24410–01 | 13 – 24 |
| 62Y–24411–03 | 13 – 26 |
| 6C5–24415–00 | 13 – 25 |
| 6C5–2441R–10 | 10 – 6 |
| 6C5–2441T–10 | 10 – 7 |
| 62Y–24423–00 | 13 – 27 |
| 6C5–24444–00 | 11 – 10 |
| 62Y–24444–01 | 13 – 30 |
| 6C5–24453–00 | 10 – 8 |
| 62Y–24454–00 | 13 – 29 |
| 6D8–24469–00 | 13 – 14 |
| 6C5–24471–01 | 13 – 31 |
| 6D8–24519–00 | 13 – 15 |
| 6C5–2451B–20 | 11 – 22 |
| 6D8–24560–02 | 13 – 10 |
| 6D8–24563–00 | 1 – 10 |
| | 13 – 11 |
| 6D8–24564–00 | 1 – 11 |
| | 13 – 12 |

| PART NO. N° PIECES | REF. NO. |
|---|---|
| 6C5–24566–11 | 13 – 16 |
| 6C5–24592–00 | 10 – 10 |
| 6YL–24610–10 | 31 – 2 |
| 6C5–28100–01 | 13 – 37 |
| 67F–2812A–00 | 17 – 31 |
| 6C1–28199–7R–D0 | 13 – 38 |
| 6C1–28199–7R–E0 | 13 – 38 |
| 6C1–28199–7R–F0 | 13 – 38 |
| 6C1–28199–7R–G0 | 13 – 38 |
| 6C1–28199–7R–H0 | 13 – 38 |
| 6C1–28199–7R–S0 | 13 – 38 |
| 6C1–28199–8R–K0 | 13 – 39 |
| 6C1–28199–8R–L0 | 13 – 39 |
| 6C1–28199–8R–M0 | 13 – 39 |
| 6C1–28199–8R–N0 | 13 – 39 |
| 6C1–28199–8R–P0 | 13 – 39 |
| 6C1–28199–8R–R0 | 13 – 39 |
| 6C5–41113–11–9S | 3 – 8 |
| 6C5–41114–10 | 3 – 15 |
| | 35 – 4 |
| 6C5–41131–00–CA | 27 – 5 |
| 6C5–41133–00 | 27 – 4 |
| | 36 – 6 |
| 6C5–41134–00 | 27 – 8 |
| | 36 – 8 |
| 6C5–41135–00 | 27 – 11 |
| | 36 – 9 |
| 6C5–41137–03 | 27 – 1 |
| 688–41211–01 | 22 – 21 |
| 6H4–41237–00 | 22 – 22 |
| 62Y–42154–A0 | 22 – 24 |
| 6C5–42171–00 | 22 – 25 |
| 6C5–42335–00 | 22 – 30 |
| 6BG–42384–00 | 21 – 3 |
| 69W–42510–01–8D | 24 – 1 |
| 6CB–42545–00 | 2 – 5 |
| 6C6–42610–50–8D | 2 – 1 |
| 6CJ–42613–10–8D | 2 – 3 |
| 6CJ–42615–10 | 2 – 12 |
| 6CB–42617–00 | 14 – 19 |
| 6CJ–4261A–10–8D | 2 – 2 |
| 6BG–42649–00 | 2 – 15 |
| 6CJ–42651–00 | 2 – 6 |
| 6BG–42652–00 | 2 – 9 |
| 6BG–42662–01 | 2 – 13 |
| 6C6–42678–40 | 2 – 17 |
| 6DA–42697–00 | 2 – 16 |
| 6AH–42697–10 | 2 – 14 |

| PART NO. N° PIECES | REF. NO. |
|---|---|
| 6CJ–42710–03–8D | 20 – 1 |
| 62Y–42715–01 | 22 – 8 |
| 62Y–42716–01 | 20 – 6 |
| 61A–42717–00 | 20 – 8 |
| 65W–42717–00 | 20 – 7 |
| 6BG–42724–01 | 21 – 2 |
| 6CJ–42725–01 | 20 – 10 |
| 6CJ–42726–10 | 20 – 11 |
| 6H1–42726–31 | 21 – 1 |
| 68U–42727–01 | 20 – 24 |
| 6BG–42727–01 | 20 – 12 |
| 6BG–42741–10–8D | 20 – 26 |
| 6BG–42748–01 | 20 – 4 |
| 6H4–42748–01 | 20 – 2 |
| 63P–42756–00 | 17 – 28 |
| 6BG–42761–00 | 20 – 9 |
| 6EE–42794–41 | 20 – 39 |
| 6EE–42794–51 | 20 – 40 |
| 6BG–42811–01 | 17 – 25 |
| 6BG–42815–00–8D | 20 – 14 |
| 6BG–42816–00 | 20 – 19 |
| 6BG–42851–00 | 2 – 8 |
| 6C5–43111–10–8D | 23 – 1 |
| 6C5–43112–01–8D | 23 – 3 |
| 6E5–43126–02 | 23 – 27 |
| 6C5–43131–00 | 23 – 12 |
| 66T–43144–00 | 20 – 21 |
| 6G5–43144–00 | 23 – 24 |
| 6E5–43145–01 | 32 – 9 |
| 6G5–43148–00 | 23 – 20 |
| 6C5–43181–00 | 23 – 15 |
| 6C5–43185–00 | 23 – 16 |
| 6C5–43311–01–8D | 23 – 10 |
| 6C5–43800–13 | 25 – 1 |
| 6CJ–43801–10 | 25 – 3 |
| 6CJ–43804–11 | 26 – 3 |
| 6CJ–43805–11 | 26 – 2 |
| 6EK–4380F–00 | 26 – 6 |
| 6C5–4380G–00 | 25 – 26 |
| 6C5–4380K–12 | 25 – 22 |
| 6CJ–4380R–10 | 25 – 8 |
| 6CJ–43810–10 | 25 – 2 |
| 6C5–43816–00 | 25 – 25 |
| 6C5–43817–10 | 25 – 23 |
| 6CJ–43818–00 | 23 – 35 |
| 6CJ–4381B–10 | 25 – 17 |
| 6CJ–43821–10 | 25 – 5 |
| 62Y–43822–00 | 25 – 4 |

NUMERICAL INDEX
INDEX NUMERIQUE

| PART NO. N° PIECES | REF. NO. |
|---|---|
| 6CJ–43829–20 | 25 – 61 |
| 6EK–4382E–00 | 25 – 35 |
| 6D8–4382L–00 | 25 – 50 |
| 6C5–43830–10 | 25 – 28 |
| 6C5–43831–00 | 25 – 62 |
| 6C5–43833–00 | 23 – 36 |
| 6C5–43834–00 | 23 – 37 |
| 6CJ–4383A–00 | 21 – 11 |
| 6D8–43841–00 | 25 – 29 |
| 6D8–43843–00 | 25 – 45 |
| 6D8–43844–00 | 25 – 44 |
| 6H1–43844–10 | 25 – 48 |
| 6CJ–43845–10 | 25 – 59 |
| 69A–4384F–00 | 25 – 33 |
| 6H1–4384G–11 | 25 – 47 |
| 62X–4384H–00 | 25 – 19 |
| 6D8–4384M–00 | 25 – 32 |
| 6D8–43851–00 | 25 – 40 |
| 6C6–43853–00 | 25 – 37 |
| 6C5–43854–00 | 25 – 52 |
| 6C5–43855–10 | 25 – 42 |
| 6C5–43856–10 | 25 – 49 |
| 6C5–43861–00 | 25 – 11 |
| | 25 – 15 |
| 6CJ–43861–10 | 25 – 60 |
| 6CJ–43862–11 | 26 – 12 |
| 6CJ–43863–00 | 25 – 7 |
| | 25 – 9 |
| 6D8–43863–00 | 25 – 57 |
| 62X–4386K–00 | 26 – 7 |
| 6C5–43871–00 | 25 – 12 |
| 6C5–43875–00 | 25 – 16 |
| 6H1–43875–00 | 25 – 58 |
| 6CJ–43879–10 | 26 – 8 |
| 6C6–4387G–00 | 25 – 36 |
| 6CJ–43880–13 | 26 – 1 |
| 6CJ–43881–10 | 26 – 10 |
| 6EK–43882–00 | 26 – 11 |
| 6H1–43883–00 | 25 – 30 |
| 6C5–43885–01 | 24 – 18 |
| 6EK–43892–00 | 26 – 4 |
| 69J–43894–00 | 25 – 31 |
| 6C5–43895–00 | 25 – 51 |
| 6C5–43899–00 | 25 – 18 |
| 69J–4389J–00 | 25 – 24 |
| | 25 – 39 |
| 62Y–44117–01 | 22 – 2 |
| 62Y–44118–00–94 | 22 – 9 |

| PART NO. N° PIECES | REF. NO. |
|---|---|
| 6C5–44120–03 | 22 – 5 |
| 6C5–44120–13 | 22 – 5 |
| 69W–44121–00 | 22 – 1 |
| 688–44122–00 | 22 – 17 |
| 6C5–44122–00 | 22 – 6 |
| 62Y–44135–00 | 22 – 27 |
| 64J–44150–01 | 29 – 64 |
| 6C5–44194–00 | 24 – 14 |
| 6H3–44311–00 | 29 – 20 |
| 6H3–44315–A0 | 29 – 22 |
| | 36 – 14 |
| | 36 – 26 |
| 688–44316–A0 | 29 – 30 |
| | 36 – 17 |
| | 36 – 29 |
| 663–44322–00 | 29 – 21 |
| | 36 – 24 |
| 6H3–44323–00 | 29 – 31 |
| | 36 – 27 |
| 6H3–44324–A0 | 29 – 32 |
| | 36 – 18 |
| | 36 – 28 |
| 6H3–44341–01–CA | 29 – 26 |
| 6H3–44352–00 | 29 – 24 |
| | 36 – 25 |
| 6C5–44361–00 | 30 – 1 |
| 6C5–44361–10 | 30 – 1 |
| 663–44366–01 | 29 – 23 |
| | 30 – 3 |
| | 36 – 21 |
| 663–44367–01 | 30 – 2 |
| 6CJ–44385–00 | 24 – 34 |
| 6BL–44391–00 | 21 – 5 |
| 64J–44514–00 | 24 – 10 |
| 69W–44526–01 | 24 – 12 |
| 69W–44551–00–8D | 24 – 16 |
| 6C5–44552–00–8D | 24 – 19 |
| 67C–44553–00–8D | 24 – 29 |
| 69W–44555–00 | 24 – 20 |
| 6C5–44575–00 | 24 – 22 |
| 6C5–45111–00–8D | 27 – 22 |
| 6C5–45123–00 | 27 – 14 |
| | 36 – 10 |
| 6C5–45135–10 | 28 – 13 |
| 6C5–45136–10 | 28 – 14 |
| 6C5–45155–02 | 27 – 17 |
| 6C5–45181–00–CA | 27 – 9 |
| 6C5–45211–00–8D | 27 – 23 |

| PART NO. N° PIECES | REF. NO. |
|---|---|
| 6C5–45213–01 | 27 – 24 |
| 6H1–45214–00 | 30 – 9 |
| 6H1–45215–00 | 30 – 10 |
| 65W–45251–00 | 1 – 12 |
| | 1 – 13 |
| | 23 – 6 |
| | 23 – 8 |
| | 23 – 25 |
| 68S–45300–34–8D | 29 – 1 |
| 68S–45300–44–8D | 29 – 1 |
| 67F–45301–00–8D | 29 – 2 |
| 69W–45318–00 | 27 – 18 |
| 688–45321–00 | 29 – 12 |
| 67F–45331–00–CA | 29 – 55 |
| 688–45341–10 | 29 – 10 |
| 67F–45371–00 | 1 – 16 |
| | 30 – 13 |
| 688–45375–00 | 30 – 8 |
| 663–45376–00 | 30 – 7 |
| 6E5–45378–00 | 29 – 16 |
| 688–45383–02 | 29 – 62 |
| 688–45384–02 | 29 – 63 |
| 64J–45501–30 | 29 – 36 |
| 64J–45501–40 | 29 – 36 |
| 688–45536–01 | 29 – 4 |
| 6K5–45551–00 | 29 – 37 |
| 68S–45560–00 | 29 – 39 |
| 688–45567–01 | 29 – 7 |
| 688–45567–10 | 29 – 7 |
| 688–45567–20 | 29 – 7 |
| 688–45567–30 | 29 – 7 |
| 688–45567–40 | 29 – 7 |
| 688–45567–50 | 29 – 7 |
| 688–45567–60 | 29 – 7 |
| 68S–45571–00 | 29 – 54 |
| 67F–45576–00 | 29 – 57 |
| 688–45587–01 | 29 – 5 |
| 688–45587–10 | 29 – 5 |
| 688–45587–20 | 29 – 5 |
| 688–45587–30 | 29 – 5 |
| 688–45587–40 | 29 – 5 |
| 688–45587–50 | 29 – 5 |
| 688–45587–60 | 29 – 5 |
| 67F–45611–01 | 29 – 41 |
| 6D8–45631–00 | 29 – 42 |
| 688–45633–00 | 29 – 51 |
| 67F–45634–00 | 29 – 43 |
| 6H1–45635–00 | 29 – 45 |

| PART NO. N° PIECES | REF. NO. |
|---|---|
| 6H1–45668–00 | 29 – 44 |
| 6N7–45930–00 | 30 – 21 |
| 6L6–45930–01 | 30 – 20 |
| 688–45930–02 | 30 – 20 |
| 6N7–45932–00 | 30 – 21 |
| 688–45932–60 | 30 – 20 |
| 68S–45941–00 | 30 – 20 |
| 6E5–45941–00 | 30 – 20 |
| 6EK–45941–00 | 30 – 21 |
| 6FP–45941–00 | 30 – 21 |
| 6E5–45943–00 | 30 – 20 |
| 6EK–45943–00 | 30 – 21 |
| 6FP–45943–00 | 30 – 21 |
| 6EK–45945–00 | 30 – 21 |
| 6FP–45945–00 | 30 – 21 |
| 6E5–45945–01 | 30 – 20 |
| 6E5–45947–00 | 30 – 20 |
| 6EK–45947–00 | 30 – 21 |
| 6FP–45947–00 | 30 – 21 |
| 6E5–45949–00 | 30 – 20 |
| 6EK–45949–00 | 30 – 21 |
| 6FP–45949–00 | 30 – 21 |
| 6E5–45952–00 | 30 – 20 |
| 6E5–45954–00 | 30 – 20 |
| 6E5–45956–00 | 30 – 20 |
| 6E5–45958–00 | 30 – 20 |
| 6H1–45970–00 | 30 – 21 |
| 6L6–45970–00 | 30 – 20 |
| 6N4–45970–00 | 30 – 21 |
| 6N7–45970–00 | 30 – 21 |
| 688–45970–03 | 30 – 20 |
| 62A–45970–10 | 30 – 20 |
| 6H1–45972–00 | 30 – 21 |
| 6L6–45972–00 | 30 – 20 |
| 6N4–45972–00 | 30 – 21 |
| 6N7–45972–00 | 30 – 21 |
| 688–45972–02 | 30 – 20 |
| 62A–45972–10 | 30 – 20 |
| 6H1–45974–00 | 30 – 21 |
| 6N4–45974–00 | 30 – 21 |
| 6N7–45974–00 | 30 – 21 |
| 688–45974–02 | 30 – 20 |
| 62A–45974–10 | 30 – 20 |
| 62A–45976–00 | 30 – 20 |
| 6H1–45976–00 | 30 – 21 |
| 6N7–45976–00 | 30 – 21 |
| 688–45976–01 | 30 – 20 |
| 6H1–45978–00 | 30 – 21 |

| PART NO. N° PIECES | REF. NO. |
|---|---|
| 6N4–45978–00 | 30 – 21 |
| 6N7–45978–00 | 30 – 21 |
| 688–45978–60 | 30 – 20 |
| 6EK–45982–00 | 30 – 22 |
| | 30 – 25 |
| 688–45987–01 | 30 – 15 |
| 67F–45997–00 | 30 – 16 |
| 6N6–45B70–00 | 30 – 24 |
| 6N6–45B72–00 | 30 – 24 |
| 6N6–45B74–00 | 30 – 24 |
| 6EK–45C82–09 | 30 – 23 |
| | 30 – 26 |
| 6C5–46132–00 | 27 – 6 |
| | 36 – 7 |
| 6C5–46241–00 | 12 – 6 |
| 6Y8–48277–00 | 33 – 16 |
| 69W–48344–00 | 22 – 20 |
| | 22 – 34 |
| 65W–48511–01 | 24 – 38 |
| 6BG–48538–00 | 20 – 37 |
| 65W–61350–00 | 32 – 1 |
| 65W–61351–00 | 32 – 2 |
| 6C5–81145–00 | 7 – 7 |
| 6C5–81146–10 | 7 – 15 |
| 68V–81315–01 | 17 – 9 |
| 6C5–81336–01 | 16 – 2 |
| 6C5–81337–11 | 14 – 1 |
| 6C5–81410–02 | 14 – 8 |
| 6C5–81450–01 | 14 – 7 |
| 6CJ–81800–01 | 19 – 1 |
| 69J–81801–11 | 19 – 5 |
| 67F–81807–00 | 19 – 10 |
| 67F–81808–00 | 19 – 8 |
| 67F–81809–00 | 19 – 19 |
| 67F–81810–00 | 19 – 3 |
| 67F–81813–00 | 19 – 6 |
| 6C5–81815–00 | 16 – 13 |
| 68F–81820–00 | 19 – 7 |
| 67F–81821–00 | 19 – 13 |
| 6C5–81822–00 | 18 – 1 |
| 6K7–81826–11 | 19 – 24 |
| 69J–81828–00 | 19 – 25 |
| 6C5–8182L–00 | 7 – 8 |
| 67F–81830–00 | 19 – 17 |
| 67F–81832–00 | 19 – 11 |
| 67F–81836–00 | 19 – 12 |
| 6C5–81839–00 | 19 – 21 |
| 67F–8183R–00 | 19 – 15 |

| PART NO. N° PIECES | REF. NO. |
|---|---|
| 60V–8183T–00 | 19 – 18 |
| 6P2–8183X–00 | 16 – 22 |
| 69J–81840–11 | 19 – 4 |
| 67F–81841–00 | 19 – 14 |
| 60X–81842–00 | 19 – 20 |
| 67F–81846–00 | 19 – 26 |
| 67F–81850–00 | 19 – 2 |
| 67F–81857–00 | 19 – 9 |
| 6C5–81869–00 | 19 – 23 |
| 67F–81891–00 | 19 – 16 |
| 6C5–81919–10 | 14 – 24 |
| 60V–81925–00 | 16 – 10 |
| 6C5–81941–00 | 19 – 22 |
| 6C5–81942–10 | 17 – 20 |
| 6C5–81948–00 | 16 – 15 |
| 68V–8194A–00 | 16 – 25 |
| 60E–81950–00 | 16 – 1 |
| 6C5–81953–00 | 16 – 28 |
| 68V–81960–10 | 15 – 16 |
| 6EE–81994–41 | 14 – 25 |
| 6EE–81994–51 | 14 – 26 |
| 6EE–81995–41 | 14 – 21 |
| 6EE–81995–51 | 14 – 22 |
| 6AG–81996–01 | 14 – 27 |
| 6C5–82105–U2 | 18 – 9 |
| 6G5–82119–00 | 16 – 27 |
| 67C–82127–10 | 24 – 32 |
| 6E5–82148–00 | 23 – 4 |
| 67F–82151–00 | 17 – 2 |
| 67F–82151–10 | 17 – 3 |
| 67F–8215B–10 | 17 – 4 |
| 67F–8215B–20 | 17 – 5 |
| 6C5–82171–00 | 15 – 18 |
| 6CJ–82181–10 | 26 – 5 |
| 63P–82310–01 | 15 – 4 |
| 6C5–82316–01 | 15 – 13 |
| 6C5–82316–11 | 15 – 14 |
| 6A0–82317–01 | 8 – 7 |
| | 16 – 20 |
| 6C5–82317–01 | 15 – 21 |
| 6C5–82340–10 | 15 – 5 |
| 6C5–82340–20 | 15 – 6 |
| 6C5–82340–30 | 15 – 7 |
| 6C5–82340–40 | 15 – 8 |
| 6C5–82388–10 | 17 – 12 |
| 64J–82504–00 | 17 – 19 |
| 6Y8–82509–10 | 33 – 8 |
| 6Y8–82521–11 | 33 – 15 |

NUMERICAL INDEX
INDEX NUMERIQUE


| PART NO. N° PIECES | REF. NO. |
|---|---|
| 6CJ–82554–00 | 17 – 15 |
| 69J–82563–01 | 16 – 32 |
| 6C5–82572–00 | 9 – 11 |
| 6C5–82573–00 | 9 – 12 |
| 6C5–8257V–00 | 16 – 4 |
| 68F–82582–00 | 16 – 12 |
| 6DA–82582–00 | 17 – 6 |
| 6DA–82582–10 | 17 – 7 |
| 69J–82587–01 | 16 – 36 |
| 6C5–82588–00 | 9 – 9 |
| 61A–82588–01 | 17 – 16 |
| 6C5–82590–H0 | 17 – 1 |
| 60V–8259F–01 | 17 – 14 |
| 6C5–825E0–01 | 34 – 1 |
| 6X4–83383–00 | 33 – 5 |
| 6X4–83386–00 | 33 – 6 |
| 6E5–83558–00 | 24 – 36 |
| 6E5–83558–10 | 29 – 18 |
| 6CJ–83559–00 | 17 – 21 |
| 6BG–83614–00 | 16 – 33 |
| 62Y–83626–00 | 14 – 23 |
| 63D–83672–12 | 23 – 31 |
| 68F–83688–00 | 7 – 16 |
| 6Y8–8454G–00 | 33 – 11 |
| 6C5–85525–00 | 15 – 1 |
| 6C5–85525–10 | 16 – 6 |
| 6C5–85548–01 | 16 – 16 |
| 6C5–85561–01 | 14 – 13 |
| 62Y–85580–00 | 14 – 16 |
| 6CJ–85790–00 | 17 – 10 |
| 6C5–85885–00 | 7 – 6 |
| 6C5–8591A–60 | 15 – 20 |
| 6BG–86112–10 | 8 – 13 |
| 6C5–86120–00 | 8 – 11 |
| 6Y8–86260–03 | 33 – 2 |
| 6AA–86261–01 | 33 – 3 |
| 6Y8–86267–00 | 33 – 1 |
| 6C5–87226–10 | 10 – 11 |
| 6C5–W0001–05 | 35 – 1 |
| 6C6–W0001–22 | 36 – 1 |
| 6H3–W0078–02 | 1 – 17 |
| | 36 – 23 |
| 6C5–W009A–14–9S | 5 – 1 |
| 6C5–W009B–0B–9S | 3 – 1 |
| 63P–W8195–00 | 16 – 21 |
| 6D8–WS24B–01 | 13 – 13 |
| 90101–06020 | 23 – 7 |
| | 23 – 9 |

| PART NO. N° PIECES | REF. NO. |
|---|---|
| 90101–06020 | 23 – 26 |
| 90101–06063 | 22 – 10 |
| 90101–09M01 | 32 – 7 |
| 90101–12063 | 23 – 41 |
| 90105–08060 | 6 – 20 |
| 90105–09009 | 5 – 12 |
| 90105–10M67 | 30 – 14 |
| 90109–06047 | 2 – 10 |
| 90109–06316 | 16 – 35 |
| | 17 – 27 |
| | 17 – 30 |
| | 20 – 13 |
| | 20 – 22 |
| | 20 – 33 |
| | 20 – 36 |
| | 20 – 38 |
| | 21 – 17 |
| | 21 – 19 |
| | 21 – 22 |
| 90109–06M65 | 5 – 8 |
| 90109–06M80 | 20 – 29 |
| 90109–06M88 | 34 – 2 |
| 90109–08229 | 24 – 11 |
| 90109–12MA3 | 24 – 23 |
| 90116–10063 | 24 – 7 |
| 90116–10M53 | 27 – 27 |
| 90119–06025 | 12 – 13 |
| 90119–06261 | 27 – 7 |
| 90119–06289 | 15 – 23 |
| | 16 – 19 |
| 90119–06291 | 8 – 10 |
| | 20 – 3 |
| 90119–06297 | 8 – 9 |
| | 22 – 29 |
| 90119–06304 | 8 – 3 |
| 90119–06MA3 | 5 – 13 |
| 90119–06MA5 | 3 – 16 |
| 90119–08094 | 24 – 21 |
| 90119–08148 | 13 – 20 |
| 90119–08154 | 3 – 4 |
| 90119–08182 | 27 – 15 |
| 90119–08190 | 8 – 2 |
| 90119–08191 | 29 – 35 |
| | 36 – 31 |
| 90119–08194 | 29 – 34 |
| | 36 – 32 |
| 90119–08195 | 30 – 6 |
| 90119–08202 | 27 – 16 |

| PART NO. N° PIECES | REF. NO. |
|---|---|
| 90119–08M00 | 27 – 28 |
| 90119–10054 | 23 – 38 |
| 90119–10068 | 30 – 5 |
| 90151–05M00 | 30 – 11 |
| 90159–04005 | 16 – 14 |
| 90159–05059 | 34 – 4 |
| 90159–06M03 | 17 – 23 |
| 90167–05009 | 17 – 22 |
| 90167–06M00 | 33 – 12 |
| 90170–09M03 | 32 – 5 |
| 90170–16M01 | 29 – 38 |
| 90170–20137 | 14 – 10 |
| 90171–16011 | 30 – 18 |
| 90179–06M28 | 2 – 4 |
| 90179–08003 | 16 – 11 |
| 90179–35001 | 12 – 9 |
| 90183–02M03 | 29 – 49 |
| 90185–05002 | 30 – 12 |
| 90185–06M05 | 2 – 11 |
| 90185–08018 | 24 – 13 |
| 90185–09M01 | 32 – 4 |
| 90185–10027 | 24 – 8 |
| 90185–22M11 | 23 – 14 |
| 90201–03313 | 29 – 47 |
| 90201–06M30 | 33 – 13 |
| 90201–10049 | 24 – 39 |
| 90201–10060 | 23 – 39 |
| 90201–10081 | 32 – 8 |
| 90201–10144 | 12 – 5 |
| 90201–10M20 | 22 – 14 |
| | 32 – 3 |
| 90201–12062 | 23 – 42 |
| 90201–12426 | 23 – 43 |
| 90201–12M07 | 20 – 18 |
| 90201–12M16 | 24 – 17 |
| 90201–13M19 | 24 – 26 |
| 90201–16014 | 6 – 19 |
| 90201–186F1 | 3 – 24 |
| | 35 – 5 |
| 90201–21M18 | 14 – 11 |
| 90201–22M05 | 24 – 27 |
| 90201–25M05 | 29 – 65 |
| 90201–30M00 | 24 – 2 |
| 90202–07M07 | 22 – 18 |
| 90202–21100 | 24 – 25 |
| 90206–10M04 | 22 – 32 |
| 90206–12052 | 20 – 17 |
| 90249–06M19 | 23 – 21 |

| PART NO. N° PIECES | REF. NO. |
|---|---|
| 90250–07M02 | 29 – 50 |
| 90280–03017 | 12 – 10 |
| 90280–03M03 | 29 – 25 |
| | 36 – 33 |
| 90282–04010 | 29 – 61 |
| 90340–08002 | 29 – 9 |
| 90340–14M06 | 3 – 25 |
| | 28 – 6 |
| 90340–18M09 | 3 – 23 |
| 90344–51003 | 3 – 6 |
| 90386–10025 | 23 – 18 |
| 90386–10M16 | 23 – 17 |
| 90386–12M37 | 20 – 15 |
| 90386–12MA2 | 20 – 16 |
| 90386–18M35 | 23 – 29 |
| 90386–18M92 | 23 – 28 |
| 90386–22MA4 | 23 – 13 |
| 90386–30M60 | 24 – 6 |
| 90386–30M77 | 24 – 4 |
| 90386–30M78 | 24 – 3 |
| 90386–90M90 | 22 – 13 |
| 90387–04001 | 17 – 17 |
| 90387–05004 | 34 – 5 |
| 90387–06119 | 8 – 8 |
| | 15 – 22 |
| | 16 – 18 |
| 90387–06285 | 14 – 3 |
| 90387–06M43 | 20 – 31 |
| 90387–06M45 | 22 – 28 |
| 90387–06M69 | 10 – 26 |
| | 20 – 5 |
| 90387–06M82 | 22 – 33 |
| 90387–08095 | 13 – 19 |
| 90387–10M42 | 32 – 6 |
| 90387–12057 | 24 – 28 |
| 90389–25M00 | 30 – 17 |
| 90430–06014 | 5 – 9 |
| | 35 – 9 |
| 90430–08003 | 1 – 15 |
| | 29 – 11 |
| | 36 – 11 |
| 90430–14115 | 3 – 26 |
| | 17 – 11 |
| | 35 – 6 |
| 90430–14M09 | 1 – 14 |
| | 28 – 7 |
| | 36 – 3 |
| 90445–07M31 | 29 – 17 |

| PART NO. N° PIECES | REF. NO. |
|---|---|
| 90445–07ME8 | 29 – 17 |
| 90445–09082 | 21 – 12 |
| 90445–13020 | 13 – 5 |
| 90446–13M11 | 13 – 7 |
| 90447–19009 | 23 – 40 |
| 90450–50001 | 8 – 6 |
| 90462–08067 | 21 – 16 |
| 90462–20005 | 20 – 32 |
| 90464–06001 | 15 – 15 |
| 90464–07019 | 15 – 9 |
| 90464–07020 | 15 – 10 |
| 90464–07M56 | 7 – 11 |
| 90464–09130 | 21 – 21 |
| 90464–09M49 | 20 – 34 |
| 90464–10006 | 24 – 35 |
| 90464–12006 | 9 – 8 |
| 90464–12183 | 16 – 9 |
| | 17 – 29 |
| 90464–13013 | 15 – 11 |
| 90464–13227 | 13 – 8 |
| 90464–15008 | 9 – 7 |
| 90464–18205 | 17 – 26 |
| 90464–18246 | 15 – 3 |
| 90464–99004 | 23 – 33 |
| 90465–08M89 | 16 – 34 |
| 90465–11M10 | 8 – 15 |
| | 9 – 5 |
| | 11 – 17 |
| | 13 – 6 |
| | 16 – 29 |
| | 20 – 35 |
| | 21 – 4 |
| | 21 – 15 |
| | 21 – 24 |
| | 23 – 34 |
| | 24 – 31 |
| | 24 – 37 |
| | 29 – 19 |
| | 33 – 10 |
| | 34 – 6 |
| 90465–11M59 | 28 – 5 |
| 90465–13M11 | 17 – 8 |
| 90465–13M18 | 8 – 18 |
| | 18 – 14 |
| | 34 – 7 |
| 90465–13M24 | 17 – 24 |
| 90465–13M97 | 14 – 18 |
| | 16 – 31 |

| PART NO. N° PIECES | REF. NO. |
|---|---|
| 90465–13M97 | 16 – 37 |
| 90467–08M18 | 21 – 23 |
| 90467–09M17 | 13 – 9 |
| 90467–10M04 | 13 – 23 |
| | 13 – 36 |
| 90468–18008 | 22 – 16 |
| | 22 – 19 |
| | 22 – 35 |
| 90480–06M19 | 14 – 5 |
| 90480–09M12 | 10 – 27 |
| 90480–10M58 | 13 – 18 |
| 90480–12072 | 18 – 10 |
| 90480–12314 | 14 – 6 |
| 90480–13M24 | 20 – 30 |
| 90480–15M31 | 14 – 4 |
| 90480–16013 | 13 – 17 |
| 90480–24003 | 18 – 7 |
| 90501–12082 | 22 – 11 |
| 90501–12M48 | 29 – 46 |
| 90506–14M24 | 23 – 22 |
| 90506–18023 | 20 – 23 |
| 91318–03005 | 25 – 56 |
| 91318–03025 | 25 – 55 |
| 91318–05030 | 25 – 54 |
| 91318–05045 | 25 – 27 |
| 91380–05020 | 25 – 64 |
| 91490–16010 | 22 – 26 |
| 91490–20015 | 22 – 15 |
| 91490–30025 | 30 – 19 |
| 91690–30020 | 23 – 19 |
| 92903–08100 | 18 – 13 |
| 92990–06100 | 34 – 3 |
| 92990–08200 | 6 – 21 |
| 92990–10100 | 27 – 30 |
| 92995–10600 | 27 – 31 |
| 93101–23070 | 29 – 28 |
| | 36 – 15 |
| 93101–25M03 | 29 – 60 |
| | 36 – 20 |
| 93101–35002 | 4 – 11 |
| | 35 – 8 |
| 93102–37M40 | 12 – 14 |
| | 35 – 14 |
| 93102–43M42 | 4 – 10 |
| | 35 – 7 |
| 93103–18011 | 27 – 2 |
| | 36 – 5 |
| 93106–09014 | 29 – 14 |

NUMERICAL INDEX
INDEX NUMERIQUE

| PART NO. N° PIECES | REF. NO. |
|---|---|
| 93106–09014 | 36 – 13 |
| 93210–04279 | 33 – 9 |
| 93210–04N51 | 25 – 46 |
| 93210–064A5 | 25 – 41 |
| 93210–07003 | 29 – 52 |
| | 36 – 22 |
| 93210–12790 | 28 – 9 |
| | 36 – 4 |
| 93210–13M63 | 5 – 7 |
| 93210–16275 | 32 – 10 |
| 93210–24M79 | 5 – 23 |
| | 13 – 34 |
| | 35 – 12 |
| | 35 – 15 |
| 93210–29M94 | 24 – 5 |
| 93210–33003 | 9 – 3 |
| 93210–44006 | 25 – 10 |
| 93210–46044 | 29 – 29 |
| | 36 – 16 |
| | 36 – 30 |
| 93210–49001 | 25 – 6 |
| 93210–49046 | 29 – 13 |
| | 36 – 12 |
| 93210–64488 | 25 – 63 |
| 93210–86M39 | 29 – 58 |
| | 36 – 19 |
| 93306–207U0 | 29 – 56 |
| 93315–52563 | 29 – 3 |
| 93317–322V0 | 29 – 40 |
| 93317–325U0 | 29 – 59 |
| 93332–00095 | 29 – 8 |
| 93332–000U3 | 29 – 6 |
| 93410–18M05 | 23 – 30 |
| 93410–28M06 | 24 – 9 |
| 93420–36M01 | 27 – 19 |
| 93450–17129 | 4 – 9 |
| 93450–40165 | 29 – 27 |
| 93501–04M02 | 22 – 12 |
| 93501–08001 | 25 – 43 |
| 93503–16003 | 25 – 14 |
| | 29 – 48 |
| 93505–32038 | 25 – 38 |
| 93604–10M03 | 3 – 9 |
| | 27 – 10 |
| | 29 – 33 |
| 93604–26256 | 25 – 53 |
| 93605–17002 | 12 – 3 |
| 93606–12019 | 3 – 3 |

| PART NO. N° PIECES | REF. NO. |
|---|---|
| 93606–12019 | 27 – 21 |
| | 27 – 26 |
| | 28 – 3 |
| | 30 – 4 |
| 93606–19002 | 23 – 2 |
| 93608–12M05 | 8 – 1 |
| | 27 – 3 |
| 93700–06002 | 23 – 11 |
| 94702–00418 | 1 – 6 |
| | 5 – 30 |
| 95023–06030 | 14 – 12 |
| | 14 – 14 |
| 95333–08600 | 18 – 12 |
| 95380–05600 | 13 – 32 |
| 95380–05700 | 22 – 23 |
| 95380–05800 | 2 – 7 |
| 95380–06600 | 8 – 12 |
| | 20 – 27 |
| 95380–08600 | 13 – 21 |
| | 18 – 4 |
| 95380–10600 | 27 – 29 |
| 95380–12600 | 23 – 44 |
| 95380–12700 | 24 – 24 |
| 95680–08330 | 18 – 3 |
| 95780–06300 | 33 – 14 |
| 95812–06025 | 28 – 11 |
| 95817–10035 | 12 – 4 |
| 95D95–06020 | 14 – 2 |
| 95D95–06035 | 22 – 31 |
| 97513–06535 | 3 – 5 |
| 97513–08545 | 18 – 8 |
| 97595–05512 | 3 – 21 |
| | 14 – 17 |
| 97595–05514 | 22 – 7 |
| 97602–04316 | 26 – 9 |
| 97607–04210 | 5 – 17 |
| 97780–60520 | 21 – 7 |
| 97780–60620 | 16 – 3 |
| | 16 – 17 |
| | 16 – 30 |
| | 33 – 7 |
| 97880–06035 | 33 – 12 |
| 97885–06008 | 23 – 5 |
| | 24 – 33 |
| 97980–06216 | 33 – 4 |
| 97980–06325 | 20 – 28 |
| 97985–04116 | 17 – 18 |
| 97985–06216 | 23 – 32 |

| PART NO. N° PIECES | REF. NO. |
|---|---|
| 97D95–06014 | 20 – 20 |
| 97E75–06520 | 27 – 25 |
| 97E75–06525 | 27 – 13 |
| 97E75–08530 | 24 – 15 |
| 97E75–10545 | 27 – 20 |
| 97E95–06512 | 23 – 23 |
| 97E95–06514 | 5 – 25 |
| | 5 – 27 |
| | 15 – 2 |
| | 15 – 19 |
| | 16 – 5 |
| | 17 – 13 |
| 97E95–06516 | 8 – 14 |
| | 8 – 17 |
| | 9 – 10 |
| | 29 – 15 |
| 97E95–06520 | 3 – 22 |
| | 5 – 19 |
| | 5 – 21 |
| | 5 – 29 |
| | 16 – 24 |
| | 22 – 3 |
| 97E95–06525 | 13 – 2 |
| | 15 – 12 |
| | 15 – 17 |
| | 22 – 4 |
| 97E95–06530 | 13 – 35 |
| 97E95–06610 | 16 – 23 |
| | 16 – 26 |
| 97E95–06620 | 16 – 7 |
| | 16 – 8 |
| | 18 – 11 |
| 97E95–08520 | 24 – 30 |
| 97E95–08525 | 18 – 6 |
| 97E95–08535 | 18 – 5 |
| 98980–05025 | 5 – 5 |
| 99001–08600 | 29 – 53 |
| 99002–03600 | 25 – 34 |
| 99009–32500 | 25 – 21 |
| 99530–08012 | 5 – 11 |
| | 14 – 15 |
| 99530–10114 | 18 – 2 |

| PART NO. N° PIECES | REF. NO. |
|---|---|

| PART NO. N° PIECES | REF. NO. |
|---|---|

| PART NO. N° PIECES | REF. NO. |
|---|---|