YAMAHA

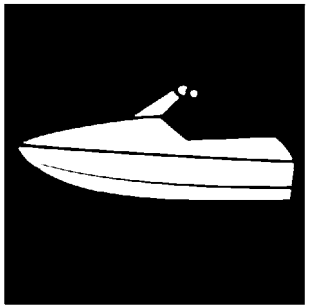

PARTS CATALOGUE

SuperJet 700

SJ700B-D (F1NA/64VP/64V2)

SJ700B-D (F1NB/64VR/64V2)

MJ-SJ700 ’05 (F1NC/64VS/64V2)

1DF1N-100E1

(2DF1N-100E1)

YAMAHA GENUINE Parts & Accessories

2009/2/27

NEWS NO.	DATE	COMMENT
PE0-WV-030010	Dec.,01,2003	FIG.14 ENGINE HATCH LIST/ILLUSTRATION CORRECTION
PE0-WV-040001	Jul.,13,2004	FIG.14 ENGINE HATCH ILLUSTRATION CORRECTION
PE0-WV-080005	May,16,2008	FIG.17 FUEL TANK LIST CORRECTION
PE0-WV-090003	Feb.,18,2009	IMPORTANT LABELS LIST CORRECTION
PE0-WV-090005	Feb.,18,2009	IMPORTANT LABELS LIST CORRECTION

SJ700B-D/MJ-SJ700
PARTS CATALOGUE
©2004 by Yamaha Motor Co., Ltd.
1st edition, June 2004
All rights reserved.
Any reprinting or unauthorized use
without the written permission of
Yamaha Motor Co., Ltd.
is expressly prohibited.
Printed in Japan.

A3

A4

FOREWORD

This Parts Catalogue is related to the parts for the model(s) on the cover page. When you are ordering replacement parts, please refer to this Parts Catalogue and quote both part numbers and part names correctly.

1. Modifications or additions which have been made after the issue of the Parts Catalogue will be announced in the Parts News.
   It is advisable that you make the necessary corrections to the Parts Catalogue according to the Parts News.

2. Abbreviations
   The following abbreviations are used in this Parts Catalogue.

   "UR" Use specified parts number.
   "UN" Use as many as needed.
   "AP" Alternate Parts
   "LM" Locally Made (Parts need to be ordered locally)
   "F#" Frame No. (Applicable machine No.)
   "O/S" Over Size

3. The number of components for assembly
   - Parts, which are to be supplied in an assembly, are listed with a dot (.) in front of the part name as shown below.
   - The numeral appearing to the right of each component part indicates the quantity of parts for each assembly unit.

PART NO.	DESCRIPTION	Q'TY	REMARKS
2F5–83310–60	FRONT FLASHER LIGHT ASSY	2	
115–83311–60	.BULB (6V–18W)	1	

4. Applicable colours of graphics are represented in the "REMARKS" as shown below.

PART NO.	DESCRIPTION	Q'TY	REMARKS
2N4–24110–00–X5	FUEL TANK COMP.	2	MXR
3J1–24240–10	.GRAPHIC, FUEL TANK	1	FOR MXR

5. Note that the illustrations for reference in finding parts numbers are not to be used for assembling. When assembling, please use the applicable service manual.

6. The asterisk (*) before a reference number indicates modified items after the first edition.

7. Applicable Serial No.

Engine Serial No.

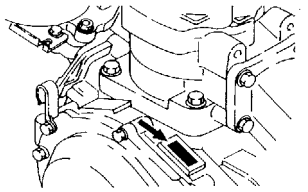

IDE-WV-F1N7

Hull Serial No.

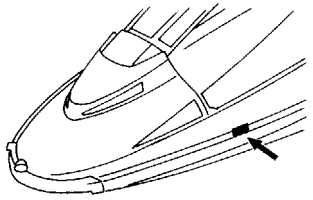

IDB-WV-F1N7

8. Applicable Colour Code (The (*) mark shows Model colour.)

Abbreviation	Colour Name	Colour Code
NMC(*)	GRAY METALLIC C	008S
SC1(*)	BLACK COAT 1	GA5W
SS4	BLACK SOLID 4	008P
PURW	PURE WHITE	0240
YB	YAMAHA BLACK	0033

9. Quantity Column Information

Column No.	Name Of Q'ty Column	Destination
1	USA	U.S.A.
2	GENE	EXCEPT USA, JPN
3	JPN	JAPAN

10. Applicable Starting Serial No.

Engine Serial No.

Serial No.	Name Of Q'ty Column	Model Code
64V-1006695	USA	64VP
64V-1006695	GENE	64VR
64V-1006695	JPN	64VS

Hull Serial No.

Serial No.	Name Of Q'ty Column	Model Code
F1N-504520	USA	F1NA
F1N-504520	GENE	F1NB
	JPN	F1NC

CONTENTS

CYLINDER & CRANKCASE B2
CRANKSHAFT & PISTON B4
INTAKE B6
CARBURETOR B8
CARBURETOR 2 ..... B10
EXHAUST 1 ..... B12
FUEL B15
JET UNIT 1 ..... C3
JET UNIT 2 ..... C5
GENERATOR C6
STARTING MOTOR C7
ELECTRICAL 1 ..... C8
ELECTRICAL 2 ..... C11
ENGINE HATCH C12
HULL & DECK C14
GUNWALE & MAT C15
FUEL TANK D2
EXHAUST 2 ..... D4
CONTROL CABLE D5
STEERING 1 ..... D6
STEERING 2 ..... D8
GRAPHICS D10
IMPORTANT LABELS D11
IMPORTANT LABELS 2 ..... D12
IMPORTANT LABELS 3 ..... D13
REPAIR KIT 1 ..... D14
REPAIR KIT 2 ..... D15

INDEX

NUMERICAL INDEX M1

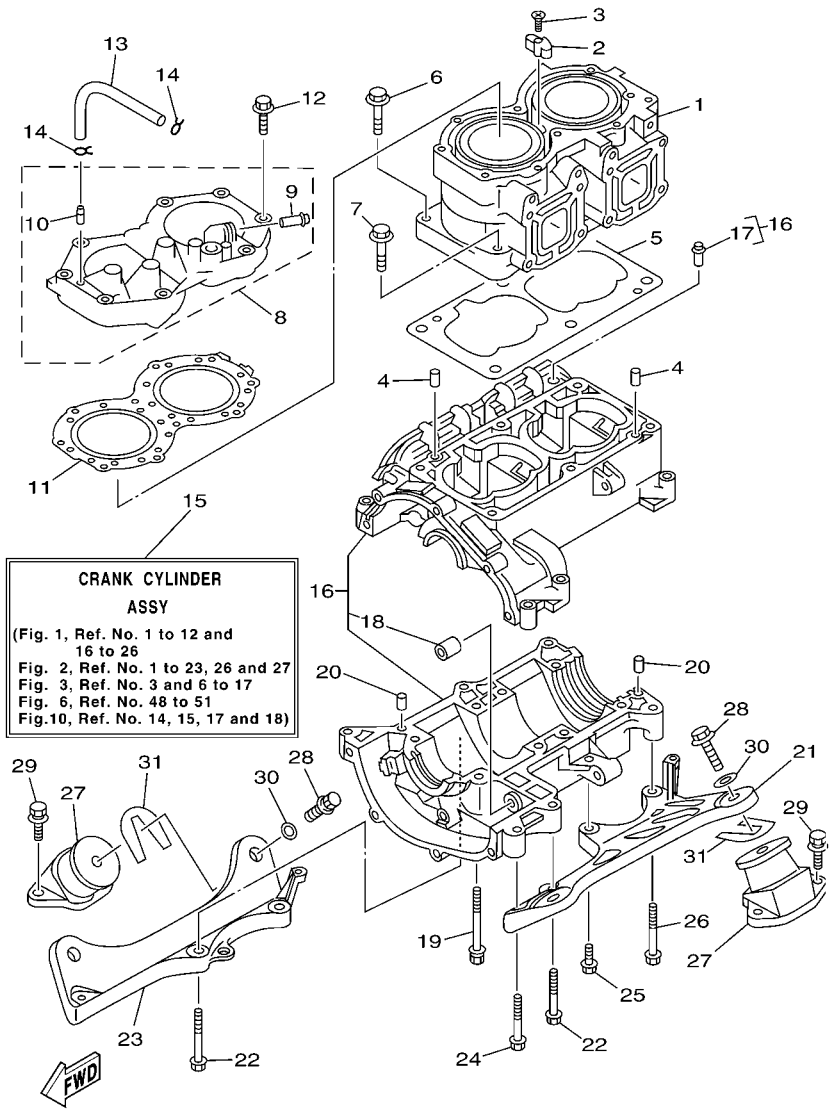

FIG. 1 CYLINDER & CRANKCASE

REF. NO.	PART NO.	DESCRIPTION	USA	GENE	JPN			REMARKS
1	61X–11311–01–8S	CYLINDER 1	1	1	1			
2	6E5–11325–00	ANODE	1	1	1			
3	98780–04015	SCREW, FLAT HEAD	1	1	1			
4	93606–12019	PIN, DOWEL	2	2	2			
5	6M6–11351–A2	GASKET, CYLINDER	1	1	1			
6	90119–10M56	BOLT, WITH WASHER	4	4	4			
7	90119–10M07	BOLT, WITH WASHER	2	2	2			
8	64U–11111–00–8S	HEAD, CYLINDER 1	1	1	1			
9	6K8–51129–00	.NIPPLE	1	1	1			
10	6R7–14485–00	.PIPE, JOINT	1	1	1			
11	62T–11181–00	GASKET, CYLINDER HEAD 1	1	1	1			
12	90119–08M96	BOLT, WITH WASHER	10	10	10			
13	90445–07M19	HOSE (L200)	1	1	1			
14	90467–06016	CLIP	2	2	2			
15	64V–W0090–02–8S	CRANK CYLINDER ASSY	1	1	1			
16	62T–15100–00–8S	CRANKCASE ASSY	1	1	1			
17	62T–14251–10	.NIPPLE	1	1	1			
18	90380–12M29	.BUSH, SOLID	1	1	1			
19	90119–08M55	BOLT, WITH WASHER	8	8	8			
20	93606–12019	PIN, DOWEL	2	2	2			
21	6R7–21415–01–94	BRACKET, FRONT UPPER 1	1	1	1			
22	90119–10M02	BOLT, WITH WASHER	4	4	4			
23	6R7–21425–01–94	BRACKET, REAR UPPER 1	1	1	1			
24	90119–10M01	BOLT, WITH WASHER	1	1	1			
25	90119–10M00	BOLT, WITH WASHER	1	1	1			
26	90119–10M03	BOLT, WITH WASHER	1	1	1			
27	6R7–44517–00–8S	MOUNT RUBBER	4	4	4			

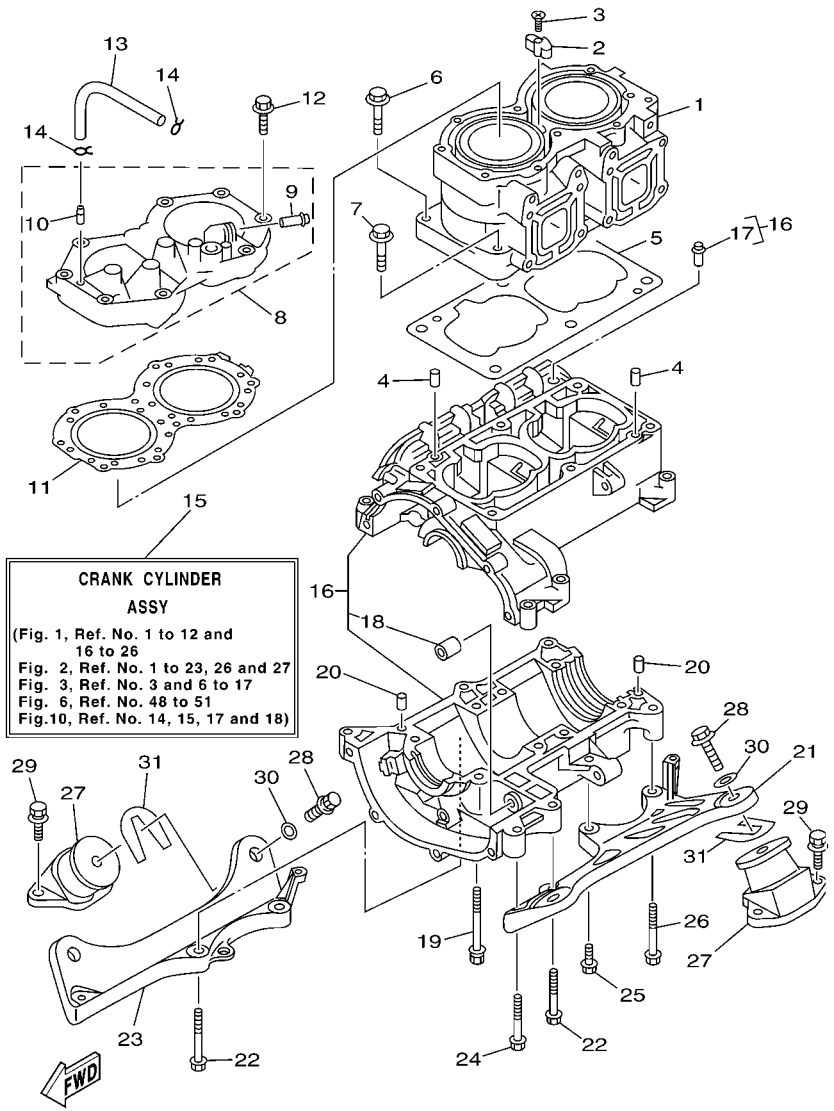

F1N4100-B011

FIG. 1 CYLINDER & CRANKCASE

REF. NO.	PART NO.	DESCRIPTION	USA	GENE	JPN			REMARKS
28	90119–08904	BOLT, WITH WASHER	4	4	4			
29	90119–08038	BOLT, WITH WASHER	8	8	8			
30	EU0–67324–00	PLATE	4	4	4			
31	EU0–67354–00–01	SHIM (T=0.1)	10	10	10			UR
	EU0–67354–00–03	SHIM (T=0.3)	10	10	10			UR
	EU0–67354–00–05	SHIM (T=0.5)	10	10	10			UR
	EU0–67354–00–10	SHIM (T=1.0)	10	10	10			UR
	EU0–67354–00–20	SHIM (T=2.0)	10	10	10			UR

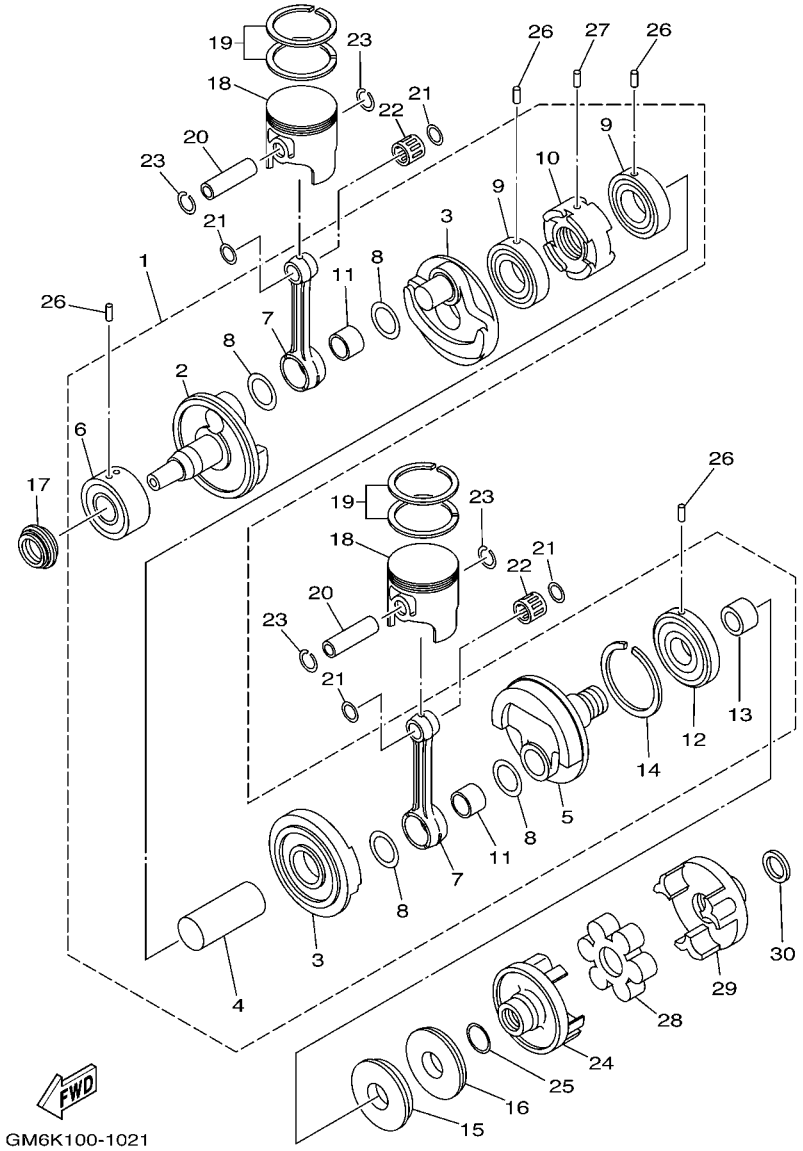

FIG. 2 CRANKSHAFT & PISTON

REF. NO.	PART NO.	DESCRIPTION	USA	GENE	JPN			REMARKS
1	61X–11400–03	CRANKSHAFT ASSY	1	1	1			
2	6M6–11412–00	.CRANK 1	1	1	1			
3	6M6–11422–00	.CRANK 2	2	2	2			
4	6M6–11431–00	.CRANK 3	1	1	1			
5	6M6–11442–01	.CRANK 4	1	1	1			
6	93305–30601	.BEARING	1	1	1			
7	62T–11651–00	.ROD, CONNECTING	2	2	2			
8	82M–11685–00	.WASHER, CRANK PIN	4	4	4			
9	93306–207U2	.BEARING	2	2	2			
10	82M–11515–00	.SEAL, LABYRINTH 1	1	1	1			
11	93310–525U0	.BEARING	2	2	2			
12	93306–307U3	.BEARING	1	1	1			
13	62T–45526–00	.COLLAR, DRIVE SHAFT	1	1	1			
14	93440–80023	.CIRCLIP	1	1	1			
15	93102–36M33	OIL SEAL	1	1	1			
16	93101–36M46	OIL SEAL	1	1	1			
17	93103–32M01	OIL SEAL	1	1	1			
18	61X–11631–02–93	PISTON (STD)	2	2	2			
	61X–11635–02	PISTON (0.25MM O/S)	2	2	2			AP
	61X–11636–02	PISTON (0.50MM O/S)	2	2	2			AP
19	61X–11603–01	PISTON RING SET (STD)	2	2	2			
	61X–11604–01	PISTON RING SET (0.25MM O/S)	2	2	2			AP
	61X–11605–01	PISTON RING SET (0.50MM O/S)	2	2	2			AP
20	61X–11633–00	PIN, PISTON	2	2	2			
21	90201–20M04	WASHER, PLATE	4	4	4			
22	93310–320U2	BEARING	2	2	2			
23	93450–21053	CIRCLIP	4	4	4			

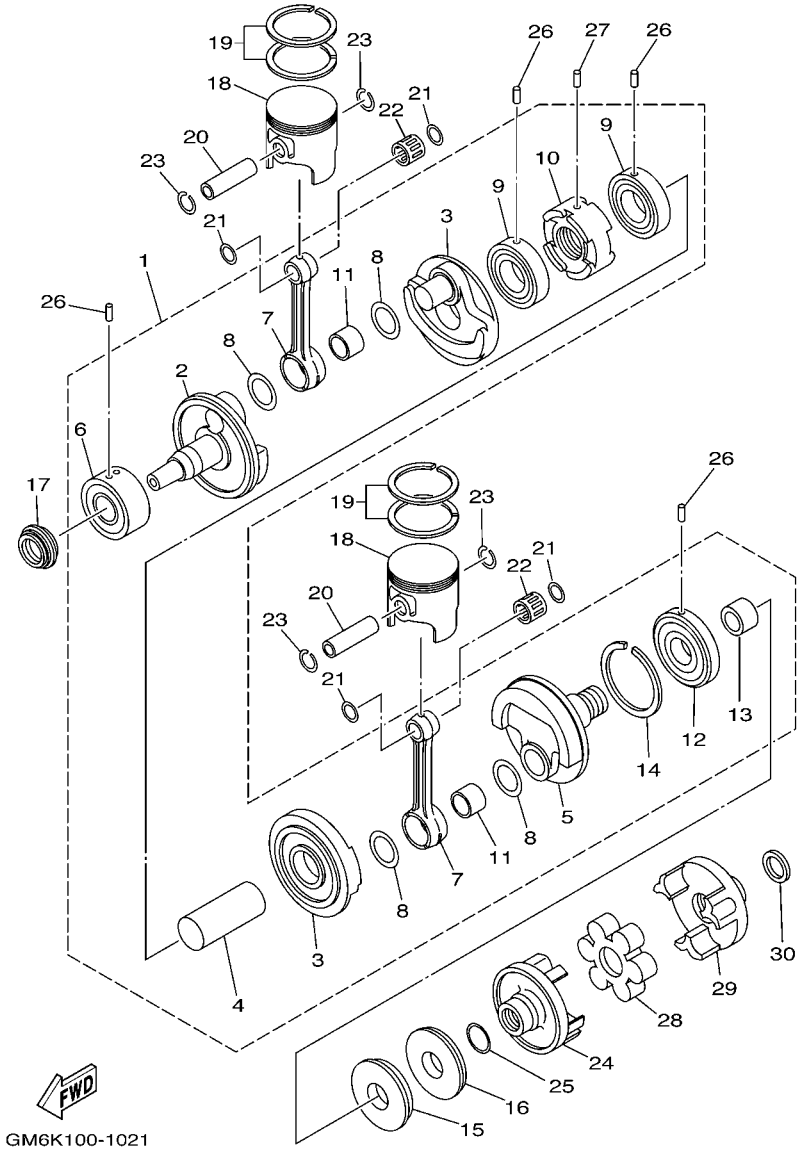

FIG. 2 CRANKSHAFT & PISTON

REF. NO.	PART NO.	DESCRIPTION	USA	GENE	JPN			REMARKS
24	6M6–45813–32–8P	FLANGE, COUPLING	1	1	1			
25	62T–45127–00	SEAL	1	1	1			
26	93603–10049	PIN, DOWEL	4	4	4			
27	93604–07141	PIN, DOWEL	1	1	1			
28	61X–4581J–00	RUBBER SHAFT COUPLING	1	1	1			
29	6M6–45813–22–8P	FLANGE, COUPLING	1	1	1			
30	90201–24M02	WASHER, PLATE	1	1	1			

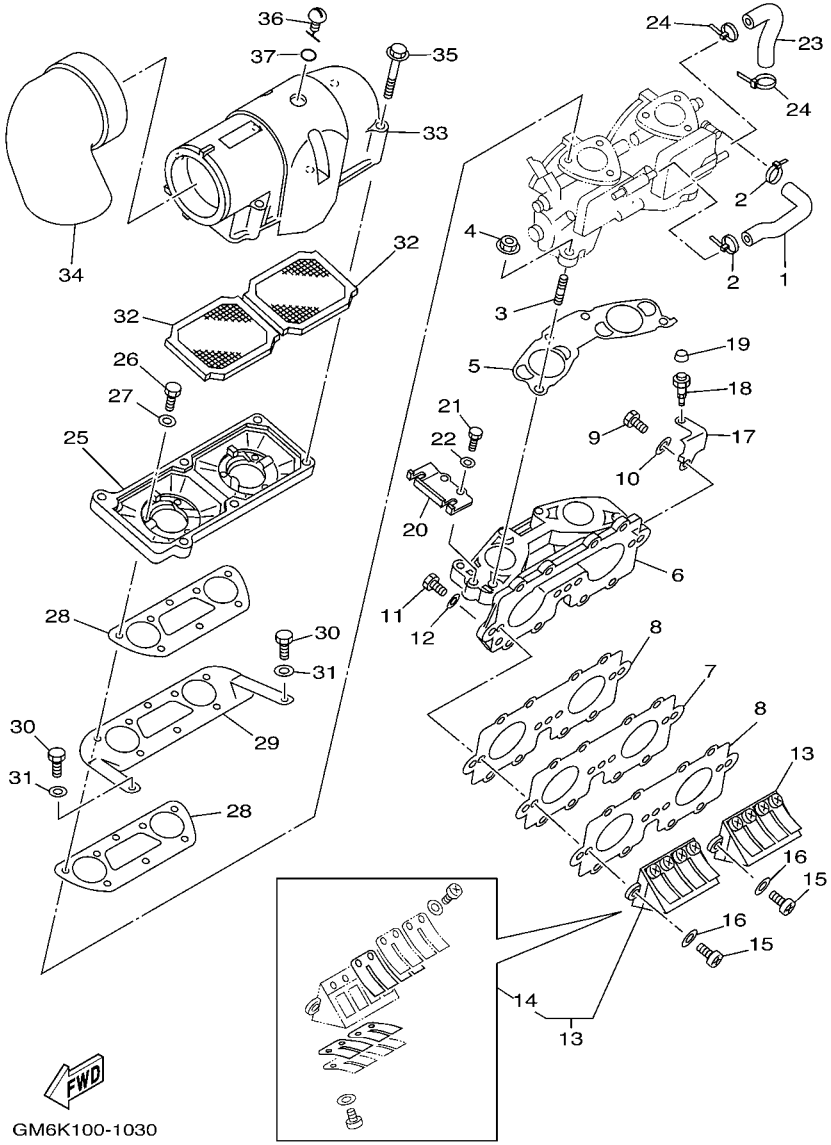

FIG. 3 INTAKE

REF. NO.	PART NO.	DESCRIPTION	USA	GENE	JPN			REMARKS
1	62T–24313–01	PIPE 3	1	1	1			
2	90465–11M10	CLAMP	2	2	2			
3	90116–08M60	BOLT, STUD	4	4	4			
4	90179–08M15	NUT	4	4	4			
5	62T–13556–00	GASKET, MANIFOLD	1	1	1			
6	62T–13555–00–94	MANIFOLD, INTAKE	1	1	1			
7	62T–13624–00	PLATE,REED VALVE	1	1	1			
8	62T–13566–00	GASKET	2	2	2			
9	97013–06035	BOLT	3	3	3			
10	92903–06600	WASHER, PLATE	3	3	3			
11	97013–06025	BOLT	8	8	8			
12	92903–06600	WASHER, PLATE	8	8	8			
13	62T–13610–00	REED VALVE ASSY	2	2	2			
14	62T–W0004–00	.REED SET	1	1	1			
15	97880–05016	SCREW, PAN HEAD	4	4	4			
16	92990–05600	WASHER, PLATE	4	4	4			
17	62T–14243–01	PLATE	1	1	1			
18	61L–5169A–00	NIPPLE, GREASE	1	1	1			
19	663–45119–00	CAP, GREASE NIPPLE	1	1	1			
20	62T–14527–02	PLATE	1	1	1			
21	97013–06016	BOLT	2	2	2			
22	92903–06600	WASHER, PLATE	2	2	2			
23	62T–24314–01	PIPE 4	1	1	1			
24	90465–11M10	CLAMP	2	2	2			
25	62T–14284–10–8S	COVER, CARBURETOR 2	1	1	1			
26	97013–06020	BOLT	6	6	6			
27	92903–06600	WASHER, PLATE	6	6	6			

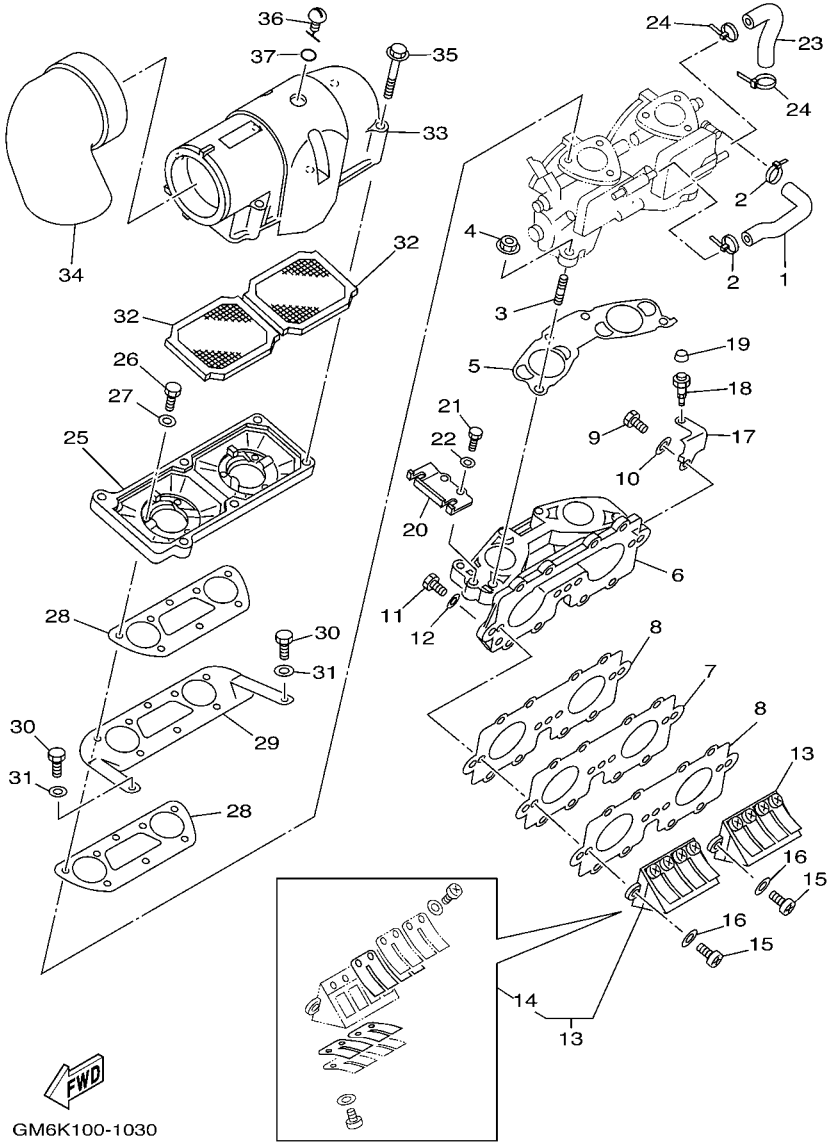

FIG. 3 INTAKE

REF. NO.	PART NO.	DESCRIPTION	USA	GENE	JPN			REMARKS
28	62T–13674–00	GASKET, AIR COOLER COVER 1	2	2	2			
29	62T–14255–00	PLATE	1	1	1			
30	97013–06012	BOLT	2	2	2			
31	92903–06600	WASHER, PLATE	2	2	2			
32	62T–14451–00	ELEMENT, AIR CLEANER	2	2	2			
33	62T–14283–00	COVER, CARBURETOR 1	1	1	1			
34	62T–14419–00	PIPE	1	1	1			
35	90119–05M02	BOLT, WITH WASHER	6	6	6			
36	62T–14435–00	GROMMET	1	1	1			
37	93210–13M63	O-RING	1	1	1			

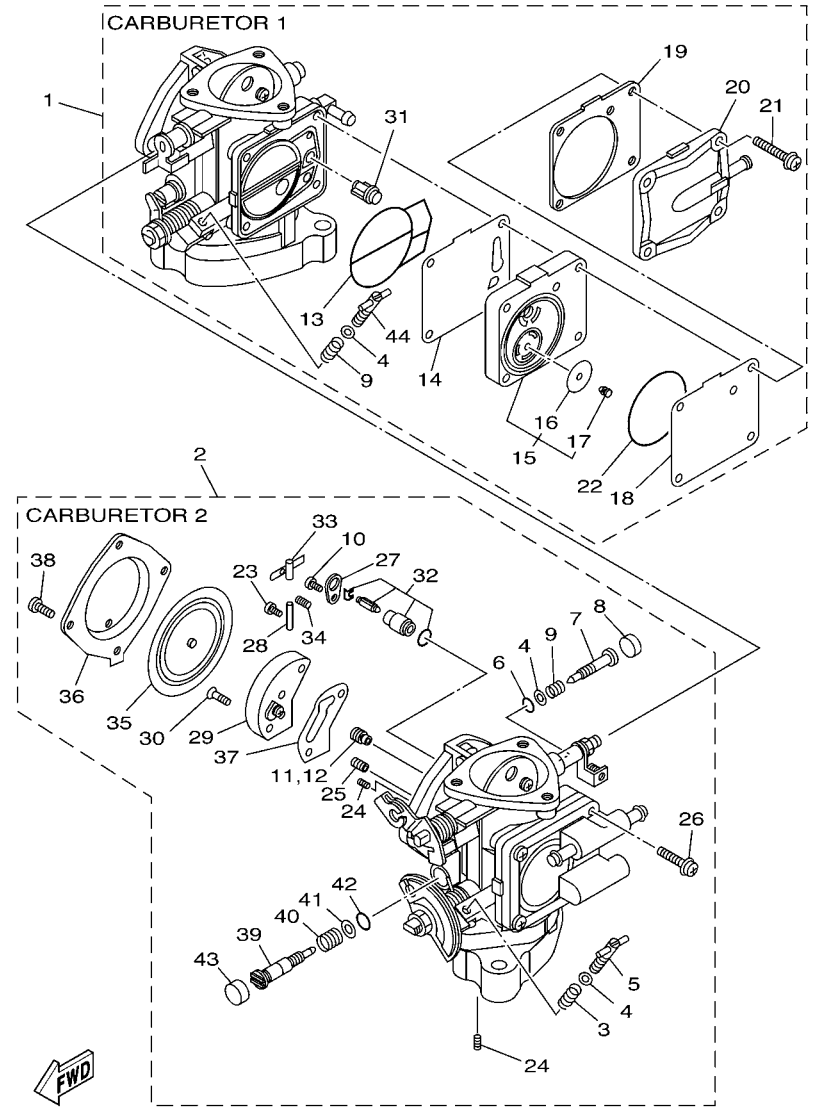

F1N7100-C040

FIG. 4 CARBURETOR

REF. NO.	PART NO.	DESCRIPTION	USA	GENE	JPN			REMARKS
1	64U–14301–10	CARBURETOR ASSY 1	1					
2	64U–14302–10	CARBURETOR ASSY 2	1					
3	47X–14133–00	.SPRING, THROTTLE STOP	1					CARBURETOR 2
4	812–14235–00	.WASHER, NEEDLE	4					
5	6M6–14521–01	.SCREW, ADJUST	1					CARBURETOR 2
6	812–14147–00	.O-RING	2					
7	64U–14946–00	.PLATE, NEEDLE FITTING	2					
8	64U–1432A–00	.PLUG	2					
9	3KW–14932–00	.SPRING, THROTTLE 2	3					
10	6M6–14503–00	.SCREW	2					
11	3G2–14231–26	.JET, MAIN (#130)	1					CARBURETOR 1
12	3G2–14231–26	.JET, MAIN (#130)	1					CARBURETOR 2
13	6K8–14564–00	.O-RING	2					
14	6K8–24411–20	.DIAPHRAGM	1					CARBURETOR 1
15	6M6–24413–02	.BODY 2	1					CARBURETOR 1
16	65U–24421–00	..VALVE, CHECK	2					CARBURETOR 1
17	65U–24492–00	..BUSH, FULEL PUMP	2					CARBURETOR 1
18	6K8–24421–10	.VALVE, CHECK	1					CARBURETOR 1
19	6K8–24431–20	.GASKET, FUEL PUMP 1	1					CARBURETOR 1
20	6K8–24452–10	.COVER	1					CARBURETOR 1
21	97980–05330	.SCREW, WITH WASHER	4					CARBURETOR 1
22	6K8–14563–00	.O-RING	1					CARBURETOR 1
23	6K8–14503–02	.SCREW	2					
24	6K8–14521–10	.SCREW	4					
25	830–14231–14	.JET, MAIN (# 70)	2					
26	98580–05018	.SCREW, PAN HEAD	4					CARBURETOR 2
27	6K8–14527–11	.PLATE	2					

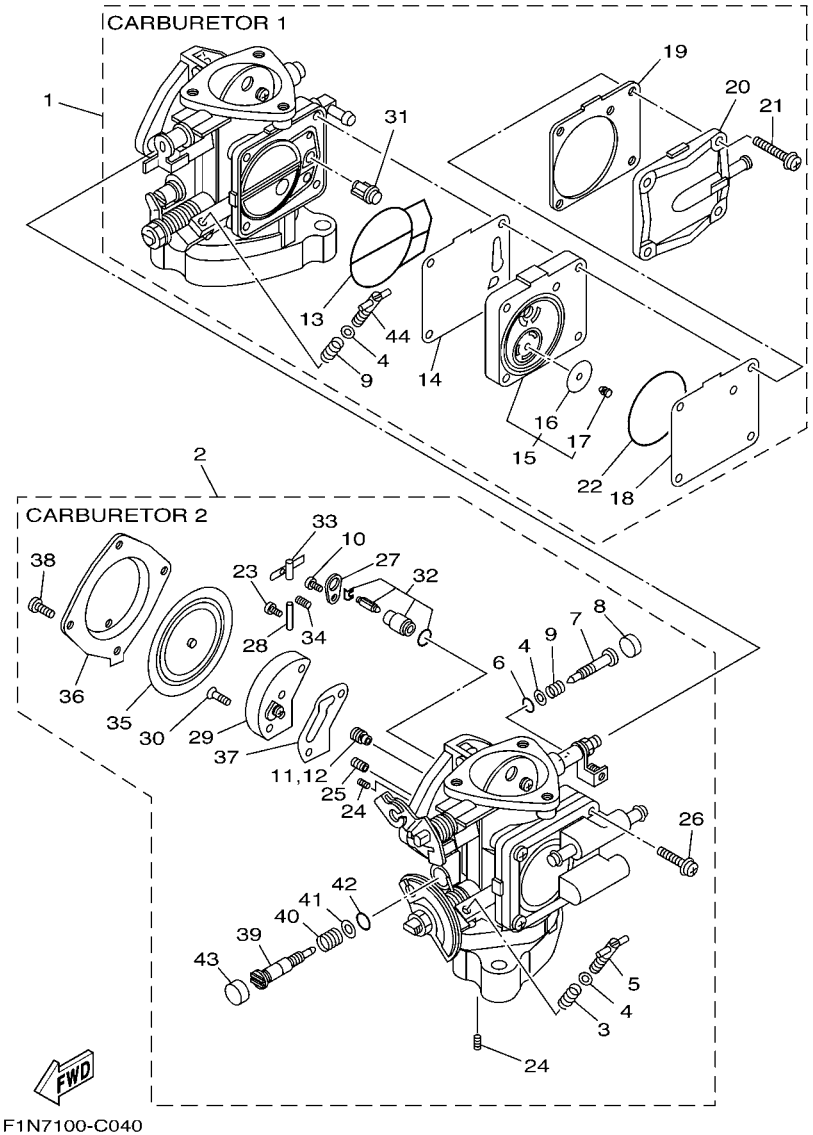

FIG. 4 CARBURETOR

REF. NO.	PART NO.	DESCRIPTION	USA	GENE	JPN			REMARKS
28	439–14186–00	.PIN, FLOAT	2					
29	6R7–24412–02	.BODY 1	2					
30	6K8–14523–11	.SCREW, STOP	4					
31	6R7–14569–00	.STRAINER	2					
32	61X–14916–16	.NEEDLE	2					
33	6K8–14547–01	.ARM, FLOAT	2					
34	6R7–14253–00	.SPRING	2					
35	6R7–14541–00	.DIAPHRAGM, PUMP	2					
36	6R7–14542–00	.BODY, PUMP 1	2					
37	6K8–14536–11	.GASKET	2					
38	97880–05012	.SCREW, PAN HEAD	8					
39	64U–14923–10	.SCREW, PILOT	2					
40	6K8–14589–00	.SPRING	2					
41	822–14235–00	.WASHER, NEEDLE	2					
42	583–14561–00	.O-RING	2					
43	64U–1432A–10	.PLUG	2					
44	6K8–14521–01	.SCREW, ADJUST	1					CARBURETOR 1

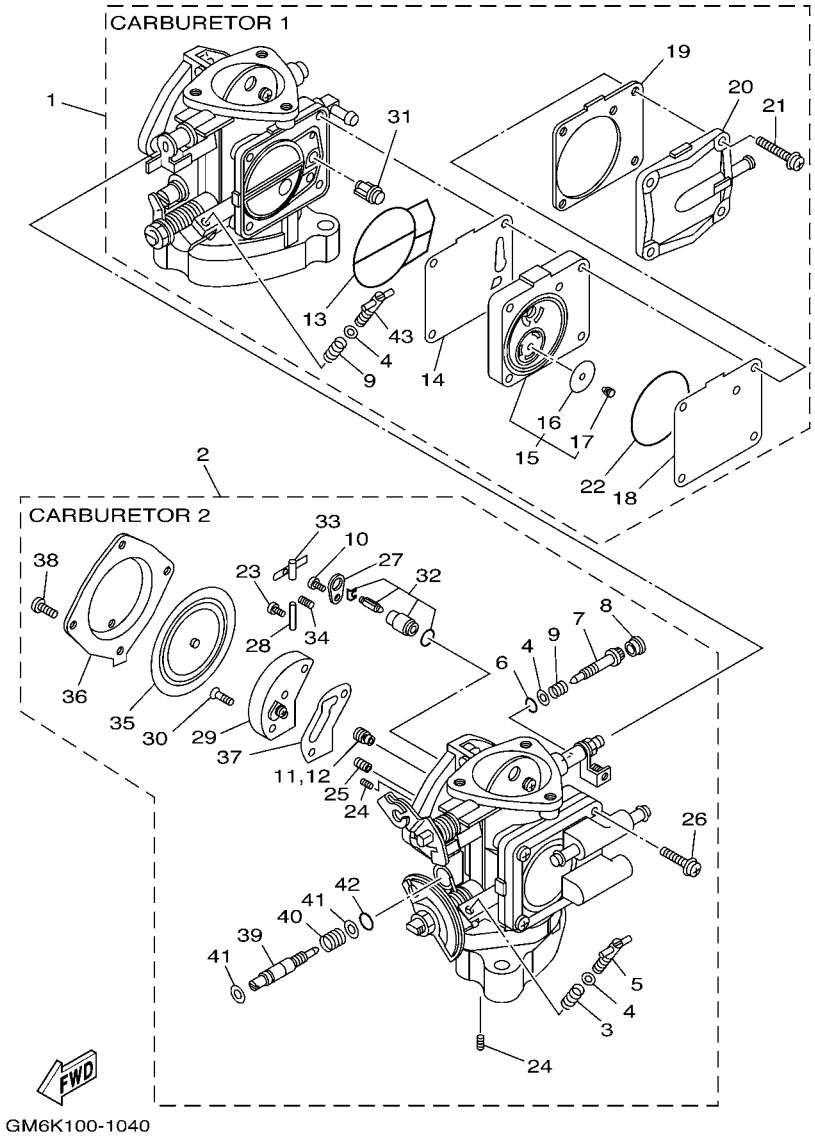

FIG. 5 CARBURETOR 2

REF. NO.	PART NO.	DESCRIPTION	USA	GENE	JPN			REMARKS
1	64U–14301–03	CARBURETOR ASSY 1		1	1			
2	64U–14302–03	CARBURETOR ASSY 2		1	1			
3	47X–14133–00	.SPRING, THROTTLE STOP		1	1			CARBURETOR 2
4	812–14235–00	.WASHER, NEEDLE		4	4			
5	6M6–14521–01	.SCREW, ADJUST		1	1			CARBURETOR 2
6	812–14147–00	.O-RING		2	2			
7	63M–14946–00	.PLATE, NEEDLE FITTING		2	2			
8	6K8–14471–10	.CAP, CARBURETOR		2	2			
9	3KW–14932–00	.SPRING, THROTTLE 2		3	3			
10	6M6–14503–00	.SCREW		2	2			
11	3G2–14231–26	.JET, MAIN (#130)		1	1			CARBURETOR 1
12	3G2–14231–26	.JET, MAIN (#130)		1	1			CARBURETOR 2
13	6K8–14564–00	.O-RING		2	2			
14	6K8–24411–20	.DIAPHRAGM		1	1			CARBURETOR 1
15	6M6–24413–01	.BODY 2		1	1			CARBURETOR 1
16	65U–24421–00	..VALVE, CHECK		2	2			CARBURETOR 1
17	65U–24492–00	..BUSH, FULEL PUMP		2	2			CARBURETOR 1
18	6K8–24421–10	.VALVE, CHECK		1	1			CARBURETOR 1
19	6K8–24431–20	.GASKET, FUEL PUMP 1		1	1			CARBURETOR 1
20	6K8–24452–10	.COVER		1	1			CARBURETOR 1
21	97980–05330	.SCREW, WITH WASHER		4	4			CARBURETOR 1
22	6K8–14563–00	.O-RING		1	1			CARBURETOR 1
23	6K8–14503–02	.SCREW		2	2			
24	6K8–14521–10	.SCREW		4	4			
25	830–14231–14	.JET, MAIN (# 70)		2	2			
26	98580–05018	.SCREW, PAN HEAD		4	4			CARBURETOR 2
27	6K8–14527–11	.PLATE		2	2			

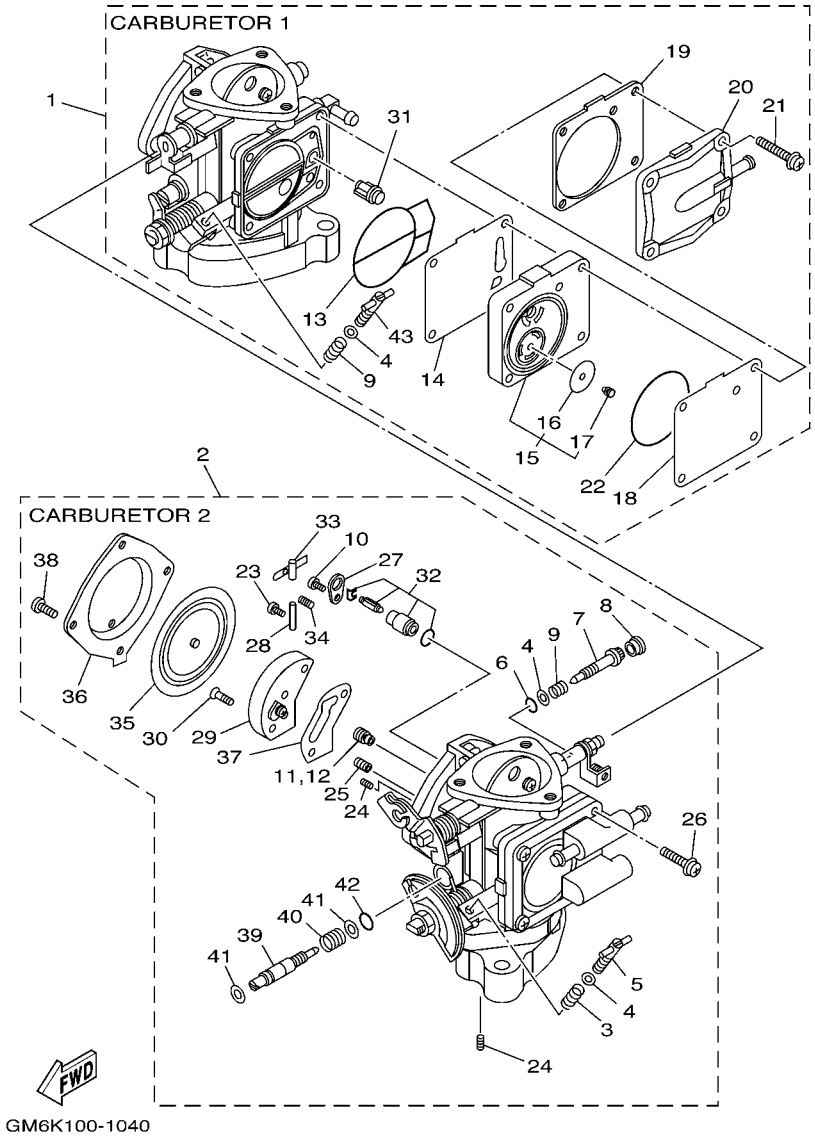

FIG. 5 CARBURETOR 2

REF. NO.	PART NO.	DESCRIPTION	USA	GENE	JPN			REMARKS
28	439–14186–00	.PIN, FLOAT		2	2			
29	6R7–24412–01	.BODY 1		2	2			
30	6K8–14523–11	.SCREW, STOP		4	4			
31	6R7–14569–00	.STRAINER		2	2			
32	61X–14916–16	.NEEDLE		2	2			
33	6K8–14547–01	.ARM, FLOAT		2	2			
34	6R7–14253–00	.SPRING		2	2			
35	6R7–14541–00	.DIAPHRAGM, PUMP		2	2			
36	6R7–14542–00	.BODY, PUMP 1		2	2			
37	6K8–14536–11	.GASKET		2	2			
38	97880–05012	.SCREW, PAN HEAD		8	8			
39	64U–14923–00	.SCREW, PILOT		2	2			
40	6K8–14589–00	.SPRING		2	2			
41	822–14235–00	.WASHER, NEEDLE		4	4			
42	583–14561–00	.O-RING		2	2			
43	6K8–14521–01	.SCREW, ADJUST		1	1			CARBURETOR 1

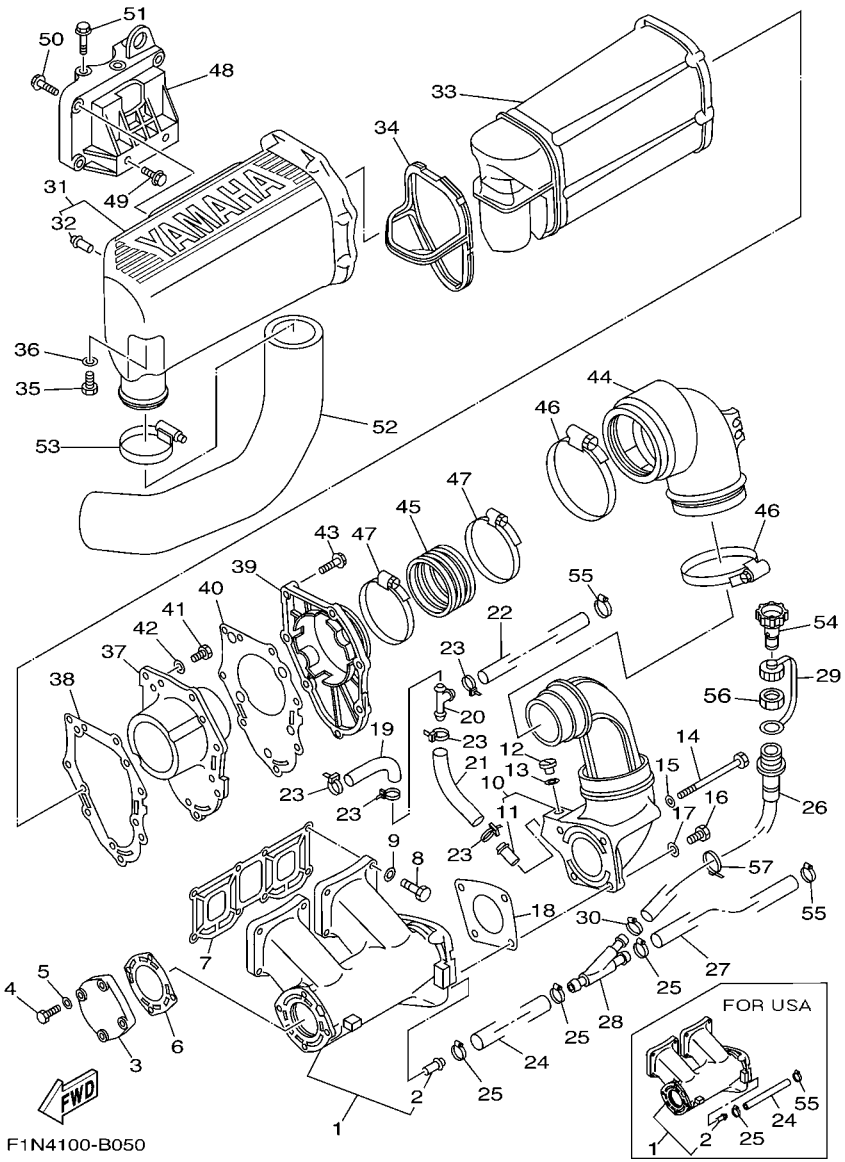

FIG. 6 EXHAUST 1

REF. NO.	PART NO.	DESCRIPTION	USA	GENE	JPN			REMARKS
1	61X–14711–01–94	MUFFLER 1	1	1	1			
2	6K8–51129–00	.NIPPLE	1	1	1			
3	6M6–14718–01–8S	PROTECTOR, MUFFLER 1	1	1	1			
4	97013–06025	BOLT	4	4	4			
5	92903–06600	WASHER, PLATE	4	4	4			
6	6M6–14739–A1	GASKET, MUFFLER DAMPER 1	1	1	1			
7	61X–14613–A0	GASKET, EXHAUST PIPE	1	1	1			
8	97013–08035	BOLT	8	8	8			
9	92903–08600	WASHER, PLATE	8	8	8			
10	61L–14712–00–94	RING, JOINT	1	1	1			
11	6K8–51129–00	.NIPPLE	1	1	1			
12	90340–08M04	PLUG, STRAIGHT SCREW	1	1	1			
13	90430–08020	GASKET	1	1	1			
14	97013–08090	BOLT	2	2	2			
15	92903–08600	WASHER, PLATE	2	2	2			
16	97013–08025	BOLT	2	2	2			
17	92903–08600	WASHER, PLATE	2	2	2			
18	6R7–14749–A0	GASKET, MUFFLER DAMPER 2	1	1	1			
19	90445–14M29	HOSE (L125)	1	1	1			
20	6E5–24378–00	PIPE, JOINT 3	1	1	1			
21	90445–14M29	HOSE (L125)	1	1	1			
22	90445–14M33	HOSE (L1150)	1	1	1			
23	90465–11M10	CLAMP	5	5	5			
24	90445–14M06	HOSE (L630)	1					FOR USA
	90445–14M14	HOSE (L330)		1	1			FOR GENE,JPN
25	90450–14M05	HOSE CLAMP ASSY	1	3	3			
26	63M–12580–00	JOINT ASSY		1	1			FOR GENE,JPN

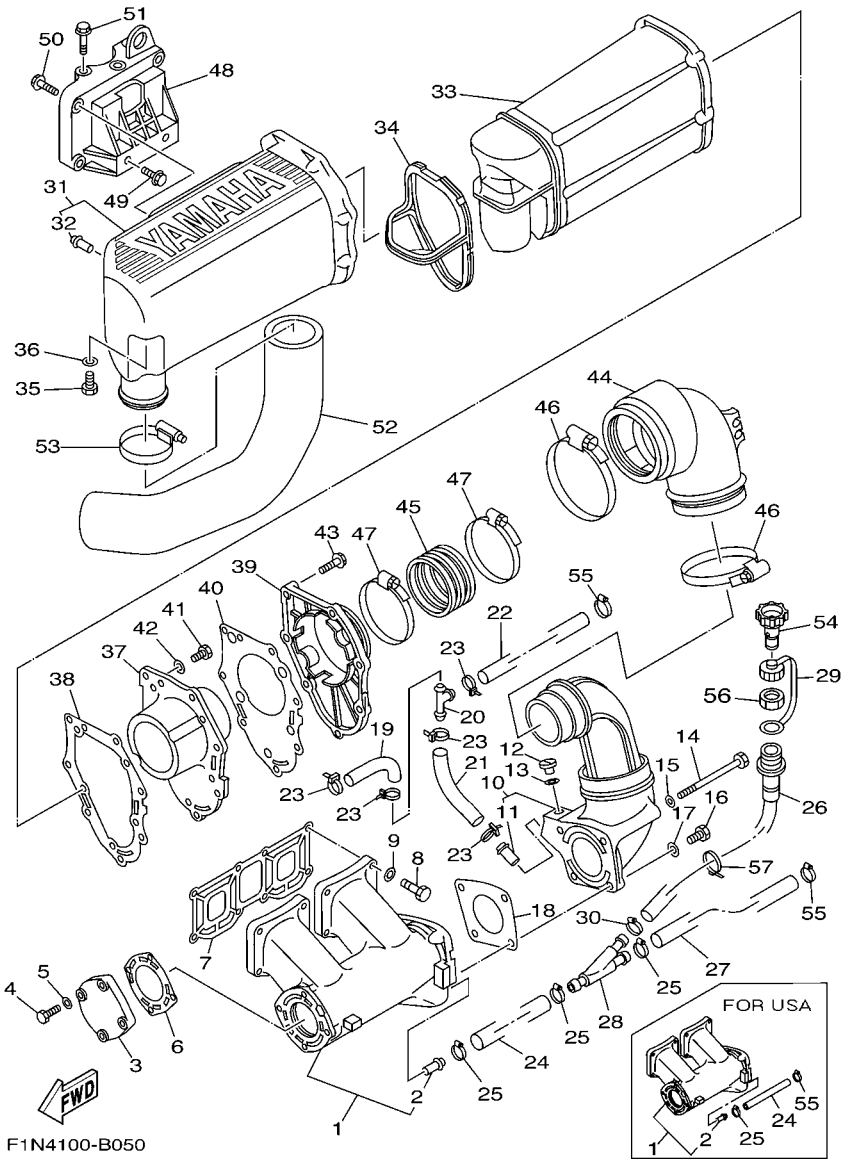

FIG. 6 EXHAUST 1

REF. NO.	PART NO.	DESCRIPTION	USA	GENE	JPN			REMARKS
27	90445–14M05	HOSE (L240)		1	1			FOR GENE,JPN
28	64X–12581–00	JOINT, HOSE 1		1	1			FOR GENE,JPN
29	682–84385–01	CAP,1		1	1			FOR GENE,JPN
30	90450–18M09	HOSE CLAMP ASSY		1	1			FOR GENE,JPN
31	6R7–14721–00–8S	MUFFLER 2	1	1	1			
32	6R7–14485–00	.PIPE, JOINT	1	1	1			
33	6R7–14753–00–9M	SILENCER, EXHAUST	1	1	1			
34	6R7–15761–00	SEAL, RUBBER 1	1	1	1			
35	97013–06020	BOLT	1	1	1			
36	92903–06600	WASHER, PLATE	1	1	1			
37	6R7–14785–00–8S	DIFFUSER	1	1	1			
38	6R7–14755–A0	GASKET, SILENCER	1	1	1			
39	6R7–41113–00–8S	OUTER COVER, EXHAUST	1	1	1			
40	6R7–41114–A0	GASKET, EXHAUST OUTER COVER	1	1	1			
41	97095–06016	BOLT	5	5	5			
42	92995–06600	WASHER	5	5	5			
43	90119–06MA1	BOLT, WITH WASHER	7	7	7			
44	61L–14615–A0	JOINT, EXHAUST 1	1	1	1			
45	61L–14625–A0	JOINT, EXHAUST 2	1	1	1			
46	90460–90M11	CLAMP, HOSE	2	2	2			
47	90460–70M16	CLAMP, HOSE	2	2	2			
48	6M6–14771–00–94	STAY, MUFFLER 1	1	1	1			
49	90105–10M49	BOLT, FLANGE	2	2	2			
50	90105–10M88	BOLT, FLANGE	3	3	3			
51	90119–10M17	BOLT, WITH WASHER	3	3	3			
52	64V–14752–00	PIPE, OUTLET	1	1	1			
53	90460–64M15	CLAMP, HOSE	1	1	1			

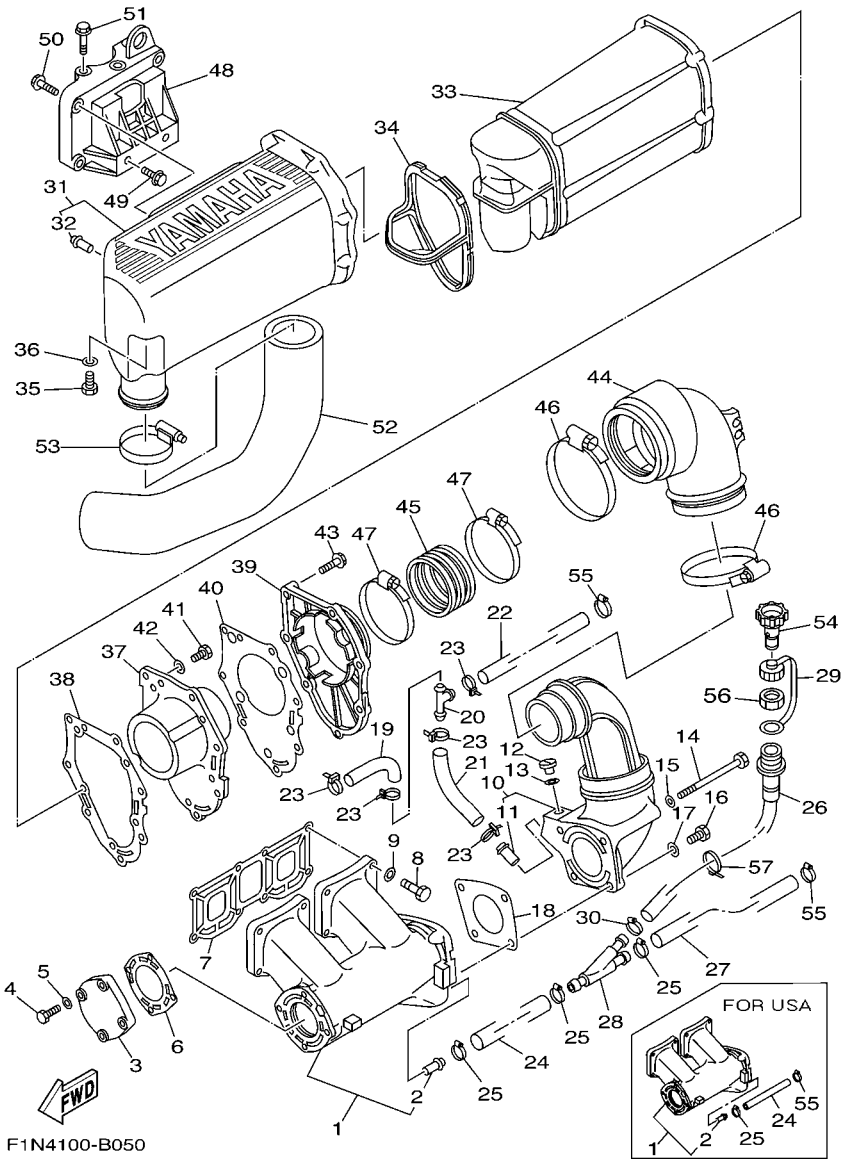

FIG. 6 EXHAUST 1

REF. NO.	PART NO.	DESCRIPTION	USA	GENE	JPN			REMARKS
54	67X–12590–20	CONDUCTION ASSY		1				FOR GENE
	67X–12590–10	CONDUCTION ASSY			1			FOR JPN
55	90450–14M05	HOSE CLAMP ASSY	2	2	2			
56	EU0–61652–00	NUT		1	1			FOR GENE,JPN
57	90601–20024	BAND		1	1			FOR GENE,JPN

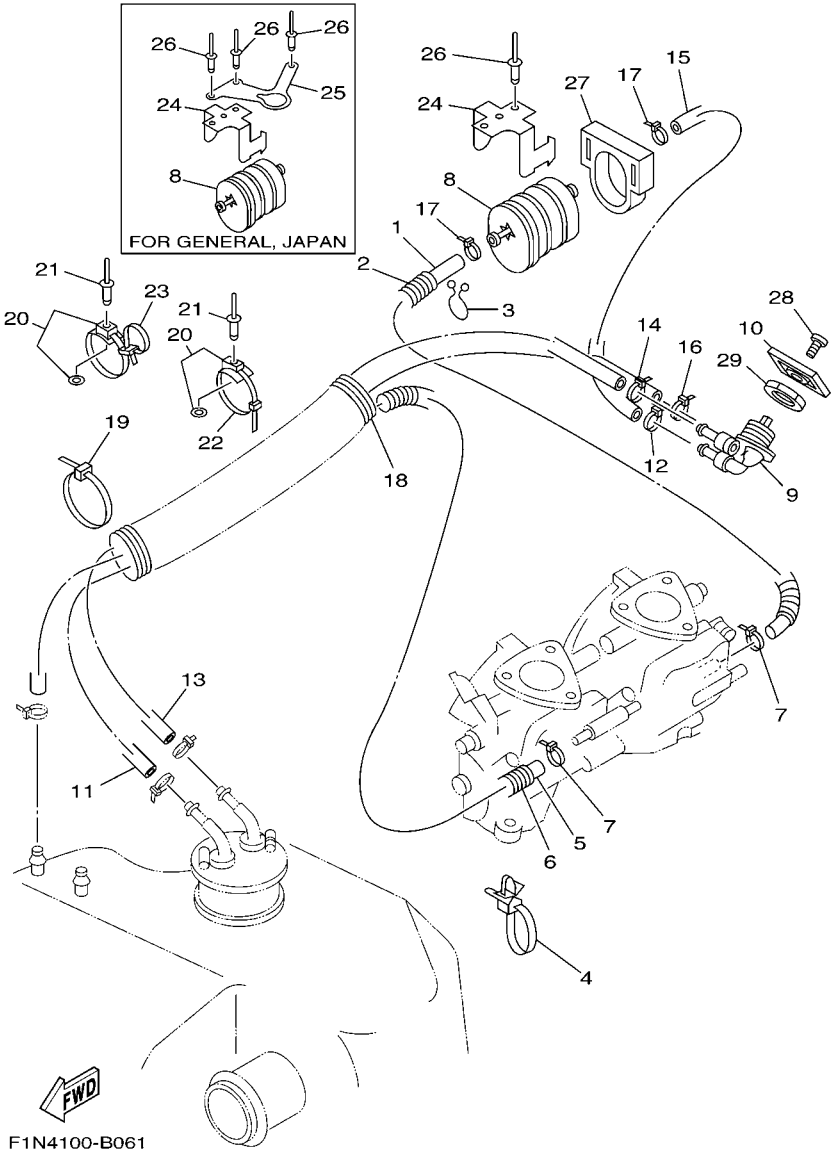

FIG. 7 FUEL

REF. NO.	PART NO.	DESCRIPTION	USA	GENE	JPN			REMARKS
1	90445–10ME8	HOSE (L230)	1	1	1			
2	90446–14M23	HOSE	1	1	1			
3	90464–08M07	CLAMP	1	1	1			
4	90465–12M56	CLAMP	1	1	1			
5	90445–10MF1	HOSE (L1220)	1	1	1			
6	90446–14M64	HOSE	1	1	1			
7	90465–11M10	CLAMP	2	2	2			
8	6K8–24560–10	FILTER ASSY	1	1	1			
9	6K8–24500–02	FUEL COCK ASSY 1	1	1	1			
10	6R7–24524–00	LEVER, COCK	1	1	1			
11	90445–10ME3	HOSE (L1010)	1	1	1			
12	90465–11M10	CLAMP	1	1	1			
13	90445–10M98	HOSE (L1010)	1	1	1			
14	90465–11M10	CLAMP	1	1	1			
15	90445–10ME4	HOSE (L140)	1	1	1			
16	90465–11M10	CLAMP	1	1	1			
17	90465–11M10	CLAMP	2	2	2			
18	GM6–6773E–00	TUBE,2	1	1	1			
19	90601–20006	BAND	1	1	1			
20	90600–91736	CLAMP COMP.	7	7	7			
21	90267–48925	RIVET, BLIND	7	7	7			
22	90601–20006	BAND	6	6	6			
23	90601–20016	BAND	2	2	2			
24	EU0–67816–30	BRACKET, FUEL FILTER	1	1	1			
25	F1N–65938–00	STAY 1		1	1			FOR GENE,JPN
26	90267–48925	RIVET, BLIND	2					FOR USA
	90267–48940	RIVET, BLIND		3	3			FOR GENE,JPN

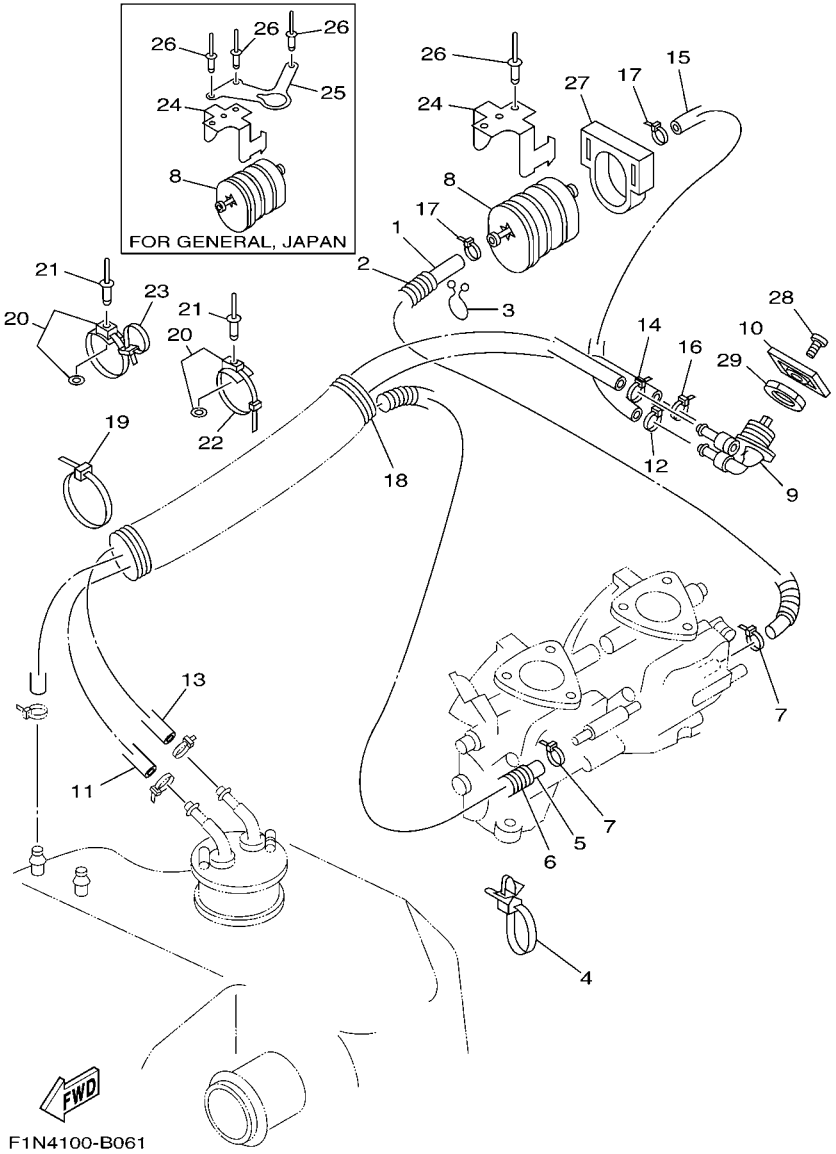

FIG. 7 FUEL

REF. NO.	PART NO.	DESCRIPTION	USA	GENE	JPN			REMARKS
27	EU0–67817–00	HOLDER	1	1	1			
28	98980–04008	SCREW, BIND	1	1	1			
29	90170–22187	NUT	1	1	1			

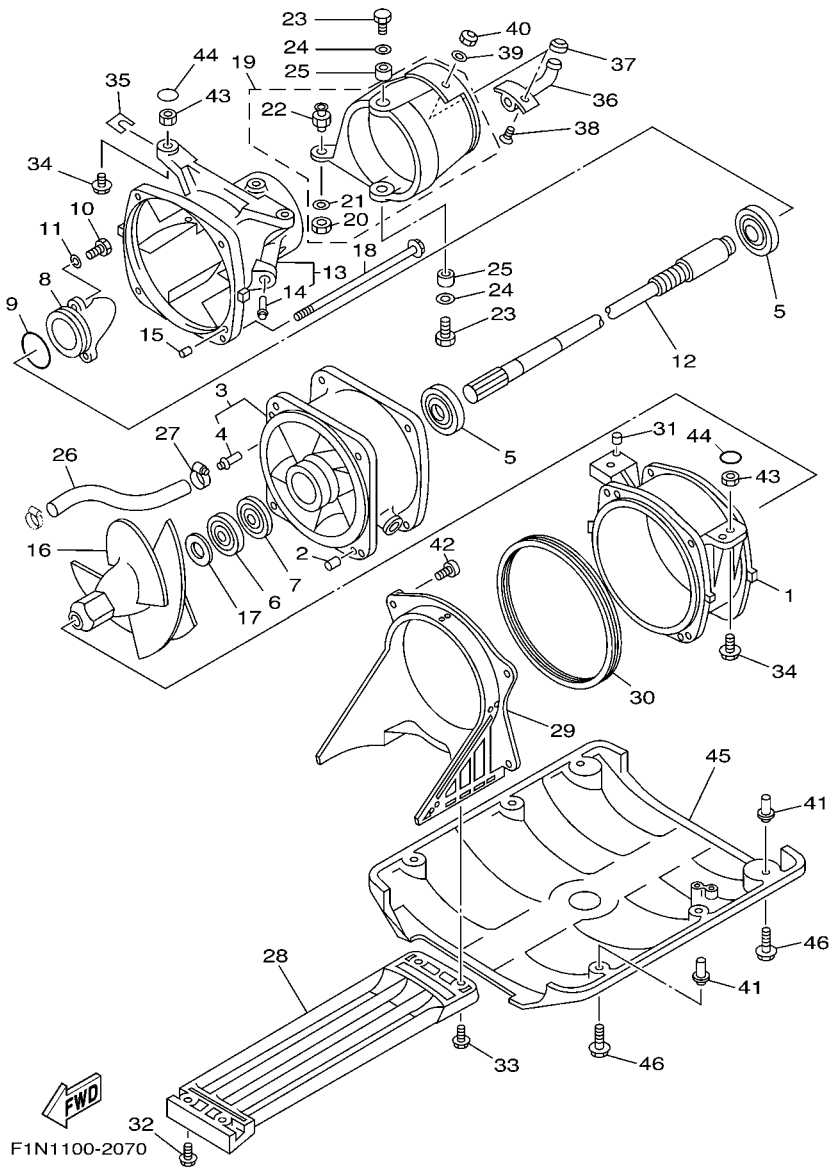

FIG. 8 JET UNIT 1

REF. NO.	PART NO.	DESCRIPTION	USA	GENE	JPN			REMARKS
1	6R7–51312–03–94	HOUSING, IMPELLER	1	1	1			
2	93606–12019	PIN, DOWEL	2	2	2			
3	62T–51315–01–94	DUCT, IMPELLER	1	1	1			
4	6K8–51129–00	.NIPPLE	1	1	1			
5	93306–205U0	BEARING	2	2	2			
6	93102–25M34	OIL SEAL	1	1	1			
7	93101–25M50	OIL SEAL	1	1	1			
8	62T–51326–00	CAP	1	1	1			
9	93210–46M16	O-RING	1	1	1			
10	97095–06020	BOLT	3	3	3			
11	92995–06600	WASHER	3	3	3			
12	6R7–45511–01	SHAFT, DRIVE	1	1	1			
13	6R7–51318–05–94	NOZZLE	1	1	1			
14	6K8–51129–00	.NIPPLE	1	1	1			
15	93606–12019	PIN, DOWEL	1	1	1			
16	6R7–51321–00–8S	IMPELLER	1	1	1			
17	62T–51348–00	SPACER	1	1	1			
18	90119–06M70	BOLT, WITH WASHER	4	4	4			
19	61L–51313–00	NOZZLE,DEFLECTOR	1	1	1			
20	95380–06700	.NUT	1	1	1			
21	90201–06M02	.WASHER, PLATE	1	1	1			
22	6R7–42316–00	.BOLT, JOINT	1	1	1			
23	97095–08018	BOLT	2	2	2			
24	92995–08600	WASHER	2	2	2			
25	90387–08M06	COLLAR	2	2	2			
26	90445–14M12	HOSE (L110)	1	1	1			
27	90450–14M05	HOSE CLAMP ASSY	1	1	1			

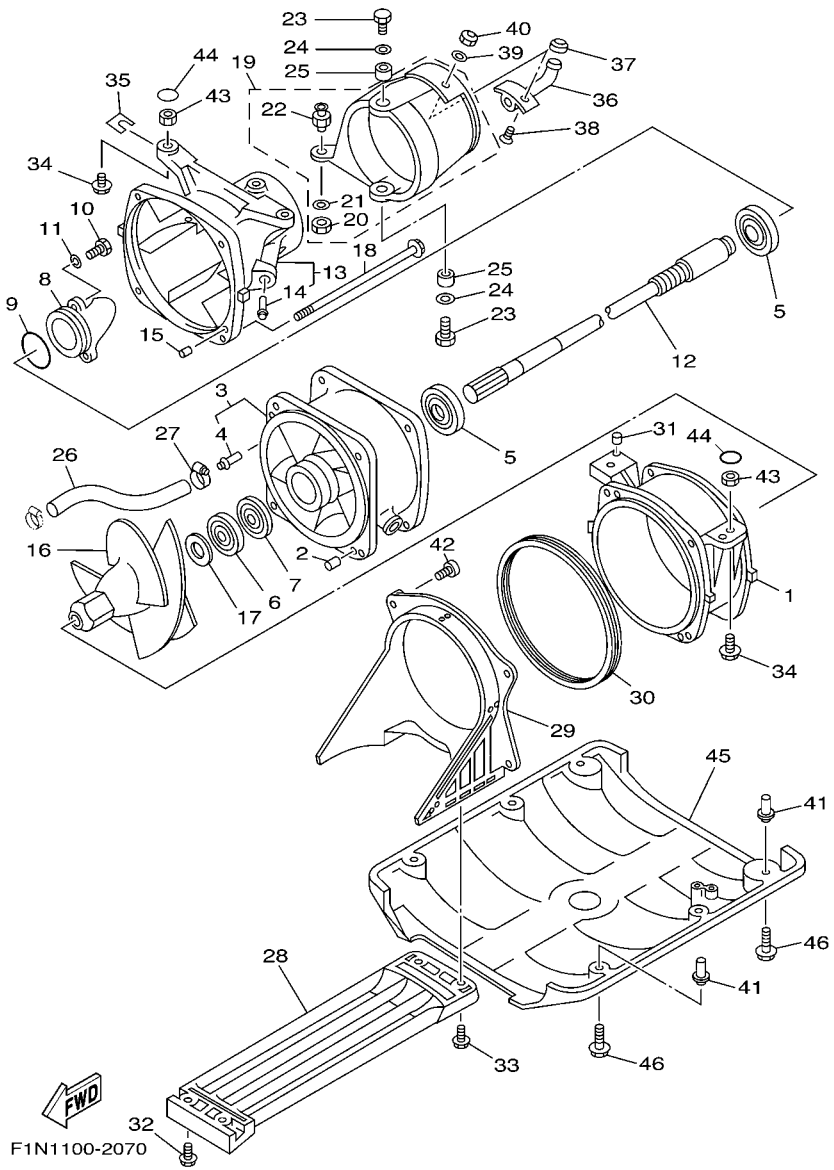

FIG. 8 JET UNIT 1

REF. NO.	PART NO.	DESCRIPTION	USA	GENE	JPN			REMARKS
28	6R7–51333–00	SCREEN, INTAKE	1	1	1			
29	6R7–51311–00	DUCT, INTAKE	1	1	1			
30	6R7–51117–01	PACKING	1	1	1			
31	93606–07M17	PIN, DOWEL	2	2	2			
32	90119–06915	BOLT, WITH WASHER	2	2	2			
33	90119–06908	BOLT, WITH WASHER	2	2	2			
34	90119–10948	BOLT, WITH WASHER	4	4	4			
35	EW2–67354–00–01	SHIM (T=0.1)	10	10	10			UR
	EW2–67354–00–03	SHIM (T=0.3)	10	10	10			UR
	EW2–67354–00–05	SHIM (T=0.5)	10	10	10			UR
	EW2–67354–00–10	SHIM (T=1.0)	10	10	10			UR
36	EU0–62693–02	SPOUT	1	1	1			
37	EU0–62695–00	CAP, SPOUT	1	1	1			
38	98780–05016	SCREW, FLAT HEAD	2	2	2			
39	92990–05200	WASHER, PLAIN	2	2	2			
40	95720–05300	NUT, FLANGE	2	2	2			
41	90179–08962	NUT	4	4	4			
42	97780–60120	SCREW, TAPPING	4	4	4			
43	90179–10925	NUT	4	4	4			
44	EW2–62723–30	SEAL	4	4	4			
45	F1N–6273B–00	PLATE 2	1	1	1			
46	90119–08943	BOLT, WITH WASHER	4	4	4			

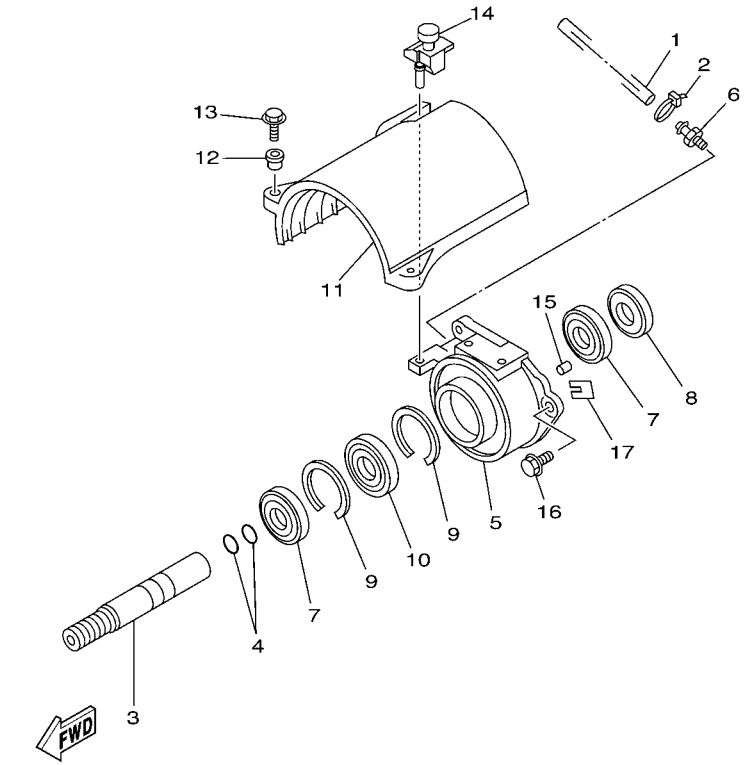

GM6H100-0080

FIG. 9 JET UNIT 2

REF. NO.	PART NO.	DESCRIPTION	USA	GENE	JPN			REMARKS
1	90445–09M17	HOSE (L320)	1	1	1			
2	90465–11M10	CLAMP	1	1	1			
3	6R7–51323–02	SHAFT, COUPLOR	1	1	1			
4	93210–17MA4	O-RING	2	2	2			
5	61X–45332–03–94	HOUSING, BEARING	1	1	1			
6	61L–45378–00	NIPPLE, HOSE	1	1	1			
7	93101–25M55	OIL SEAL	2	2	2			
8	93101–25M56	OIL SEAL	1	1	1			
9	93430–47M04	CIRCLIP	2	2	2			
10	93306–205U6	BEARING	1	1	1			
11	61X–51381–00	COVER	1	1	1			
12	90387–06M60	COLLAR	2	2	2			
13	97595–06525	BOLT, WITH WASHER	2	2	2			
14	90480–06M69	GROMMET	1	1	1			
15	93606–12019	PIN, DOWEL	2	2	2			
16	90119–08907	BOLT, WITH WASHER	3	3	3			
17	GD0–67249–00–05	SHIM (T=0.5)	1	1	1			UR
	GD0–67249–00–10	SHIM (T=1.0)	1	1	1			UR

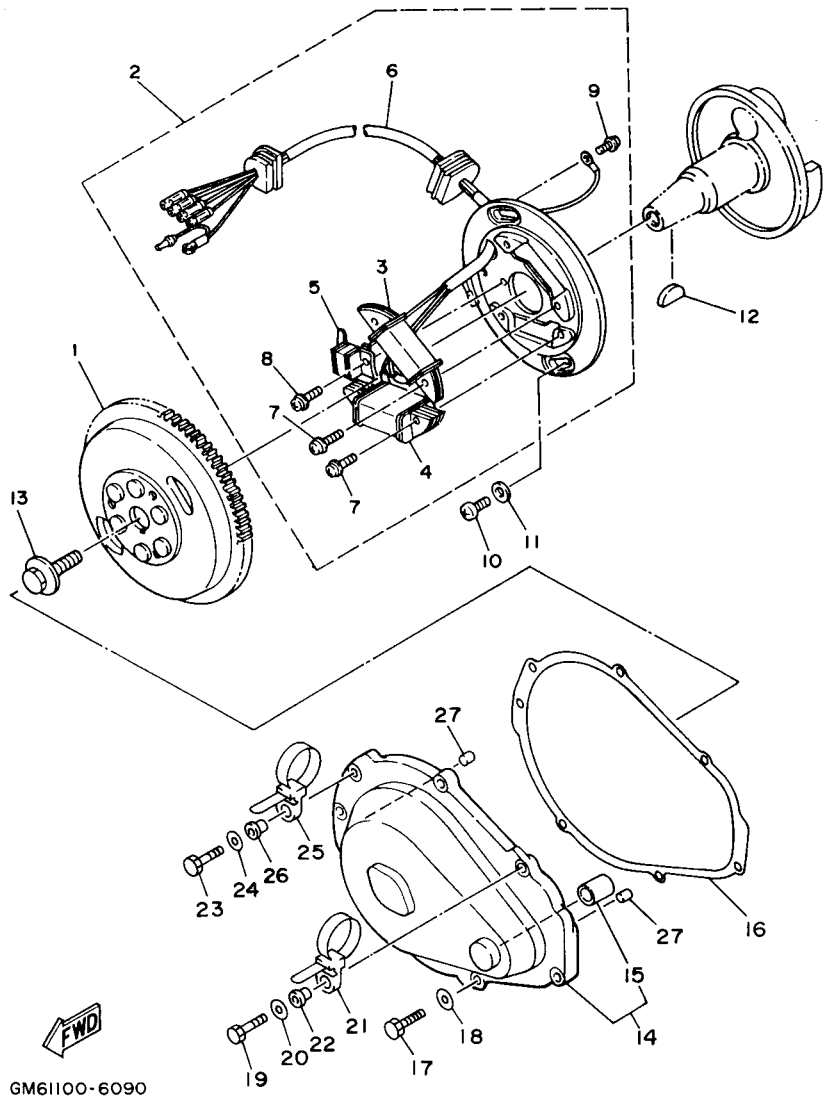

FIG. 10 GENERATOR

REF. NO.	PART NO.	DESCRIPTION	USA	GENE	JPN			REMARKS
1	62T–85550–00	ROTOR ASSY	1	1	1			
2	62T–85560–00	BASE ASSY	1	1	1			
3	62T–85520–00	.COIL, CHARGE	1	1	1			
4	62T–85533–00	.COIL, LIGHTING	1	1	1			
5	6M6–85580–00	.COIL, PULSER	1	1	1			
6	62T–85515–00	.LEAD WIRE ASSY	1	1	1			
7	97902–05125	.SCREW, WITH WASHER	4	4	4			
8	97902–04122	.SCREW, WITH WASHER	2	2	2			
9	97802–04008	.SCREW, PAN HEAD	1	1	1			
10	97880–06016	SCREW, PAN HEAD	2	2	2			
11	92990–06600	WASHER, PLATE	2	2	2			
12	90280–05013	KEY, WOODRUFF	1	1	1			
13	90109–10M44	BOLT	1	1	1			
14	6M6–81337–00–8S	COVER, FLYWHEEL	1	1	1			
15	90380–12M29	.BUSH, SOLID	1	1	1			
16	6M6–81365–A0	GASKET, HOLE COVER	1	1	1			
17	97095–06025	BOLT	5	5	5			
18	92995–06600	WASHER	5	5	5			
19	97095–06035	BOLT	1	1	1			
20	92995–06600	WASHER	1	1	1			
21	90465–12M53	CLAMP	1	1	1			
22	90387–06M05	COLLAR	1	1	1			
23	97095–06035	BOLT	1	1	1			
24	92995–06600	WASHER	1	1	1			
25	90465–12M53	CLAMP	1	1	1			
26	90387–06M05	COLLAR	1	1	1			
27	93606–12019	PIN, DOWEL	2	2	2			

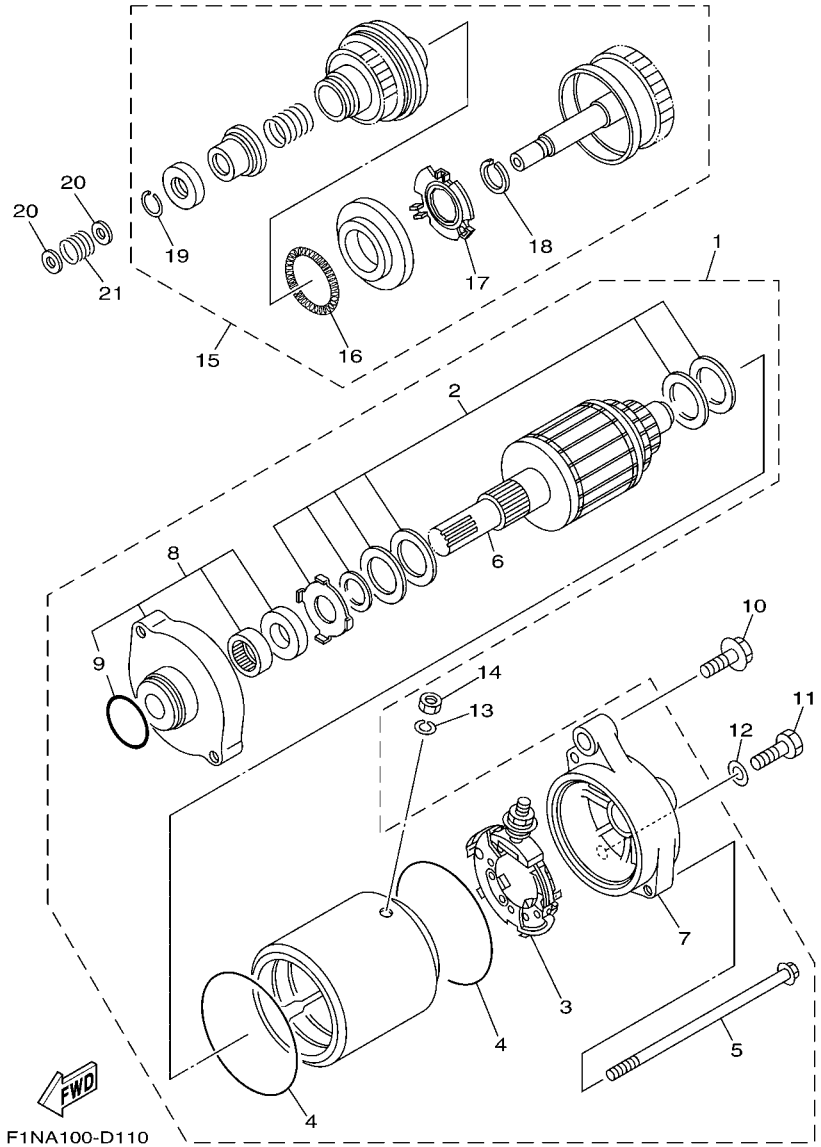

FIG. 11 STARTING MOTOR

REF. NO.	PART NO.	DESCRIPTION	USA	GENE	JPN			REMARKS
1	6M6–81800–10	STARTING MOTOR ASSY	1	1	1			
2	3AJ–81809–00	.WASHER KIT	1	1	1			
3	6M6–81840–10	.BRUSH HOLDER ASSY	1	1	1			
4	11H–81844–00	.GASKET	2	2	2			
5	6M6–81826–00	.BOLT	2	2	2			
6	6M6–81850–00	.ARMATURE ASSY	1	1	1			
7	6M6–81820–00	.REAR BRACKET ASSY	1	1	1			
8	6M6–81830–00	.FRONT BRACKET ASSY	1	1	1			
9	26H–81847–00	..O-RING	1	1	1			
10	97513–08540	BOLT, WITH WASHER	1	1	1			
11	97013–08035	BOLT	1	1	1			
12	92903–08600	WASHER, PLATE	1	1	1			
13	92990–06100	WASHER, SPRING	1	1	1			
14	95380–06700	NUT	1	1	1			
15	6M6–8183E–01	IDLE GEAR COMP.	1	1	1			
16	6M6–81866–00	.WEIGHT SPRING	1	1	1			
17	6M6–81865–00	.WEIGHT HOLDER	1	1	1			
18	93440–25M08	.CIRCLIP	1	1	1			
19	93450–18M06	.CIRCLIP	1	1	1			
20	92903–06600	WASHER, PLATE	2	2	2			
21	90501–14M73	SPRING, COMPRESSION	1	1	1			

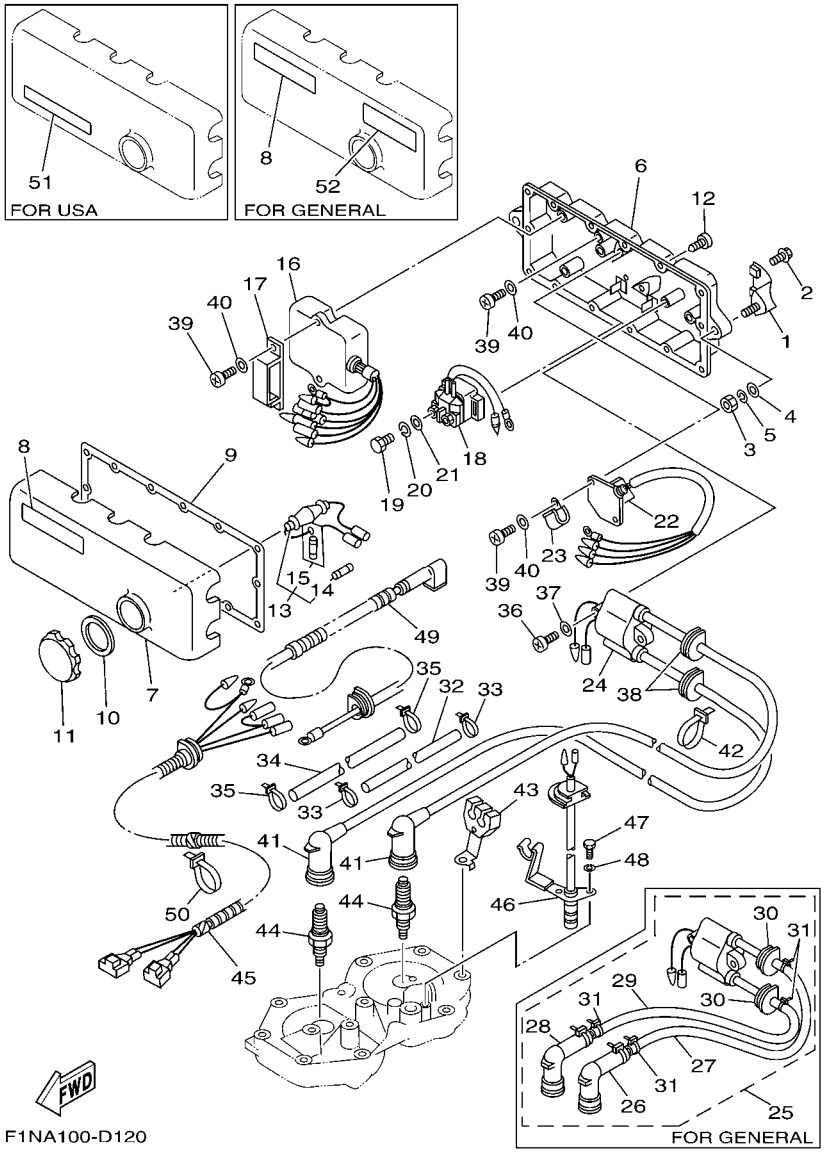

FIG. 12 ELECTRICAL 1

REF. NO.	PART NO.	DESCRIPTION	USA	GENE	JPN			REMARKS
1	EW2–68156–00	BRACKET, ELECTRIC BOX	2	2	2			
2	90119–06908	BOLT, WITH WASHER	4	4	4			
3	95380–08600	NUT	2	2	2			
4	92990–08200	WASHER, PLAIN	2	2	2			
5	92990–08100	WASHER, SPRING	2	2	2			
6	6M6–8552A–01–8P	HOUSING	1	1	1			
7	6M6–8552E–01	COVER, CASE	1	1	1			
8	6R7–83623–40	MARK 3	1	1				FOR USA,GENE
	63N–83623–00	MARK 3			1			FOR JPN
9	6M6–81921–00	GASKET, TERMINAL	1	1	1			
10	6M6–81844–00	GASKET	1	1	1			
11	6M6–8132W–00	CAP	1	1	1			
12	97780–60525	SCREW, TAPPING	14	14	14			
13	6K8–82150–01	FUSE HOLDER ASSY	1	1	1			
14	6G1–82151–00	.FUSE (10A)	1	1	1			
15	6K8–82159–00	.FUSE SPEAR (10A)	1	1	1			
16	62T–85540–01	C.D.I. UNIT ASSY	1	1	1			
17	90464–06M29	CLAMP	1	1	1			
18	68N–81940–00	STARTER RELAY ASSY	1	1	1			
19	97095–06010	BOLT	2	2	2			
20	92995–06100	WASHER, SPRING	2	2	2			
21	92995–06600	WASHER	2	2	2			
22	6M6–81960–A0	RECTIFIER & REGULATOR ASSY	1	1	1			
23	90465–06M86	CLAMP	1	1	1			
24	62E–85570–00	IGNITION COIL ASSY	1		1			FOR USA,JPN
25	62E–85570–11	IGNITION COIL ASSY		1				FOR GENE
26	62E–82371–11	.CAP, PLUG		1				FOR GENE

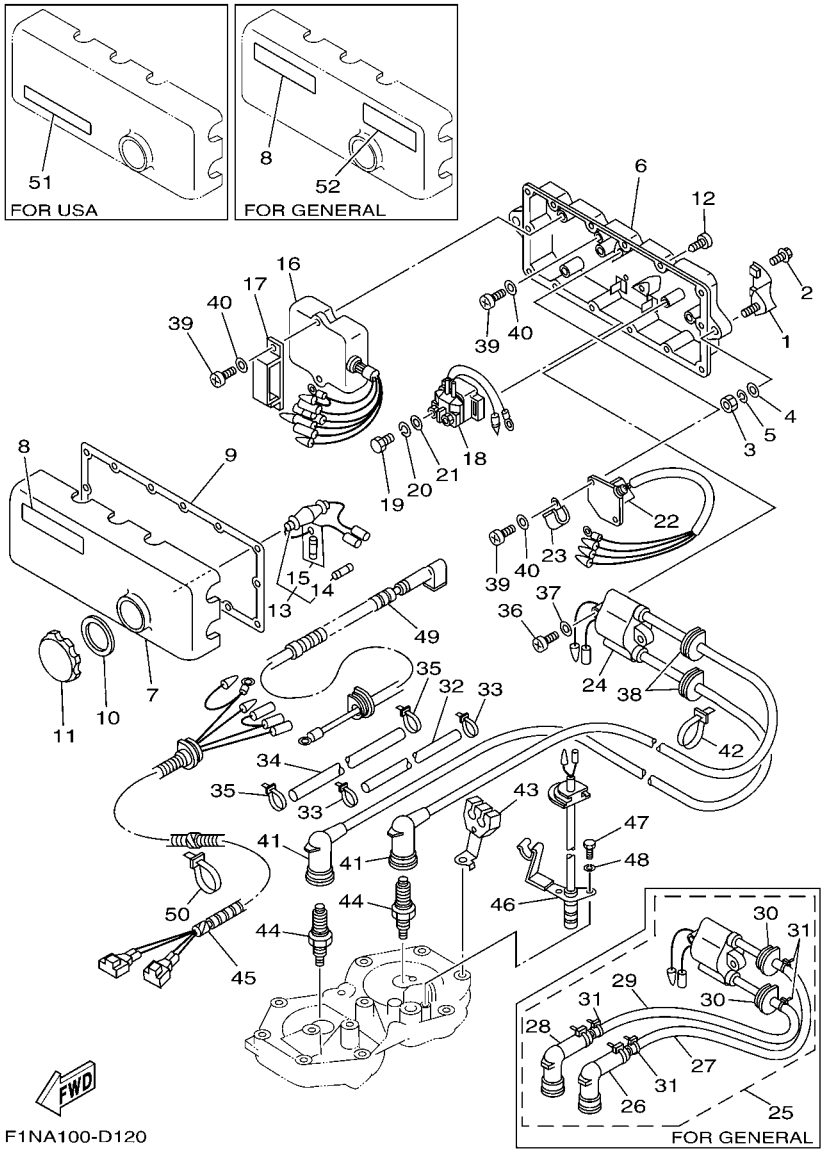

FIG. 12 ELECTRICAL 1

REF. NO.	PART NO.	DESCRIPTION	USA	GENE	JPN			REMARKS
27	62E–82351–01	.TUBE, CORD		1				FOR GENE
28	62E–82371–11	.CAP, PLUG		1				FOR GENE
29	62E–82352–01	.TUBE, CORD 2		1				FOR GENE
30	90480–06M43	.GROMMET		2				FOR GENE
31	90465–11M10	.CLAMP		4				FOR GENE
32	6R7–82351–00	TUBE, CORD	1		1			FOR USA,JPN
33	90465–11M10	CLAMP	2		2			FOR USA,JPN
34	6R7–82352–00	TUBE, CORD 2	1		1			FOR USA,JPN
35	90465–11M10	CLAMP	2		2			FOR USA,JPN
36	97880–06030	SCREW, PAN HEAD	2	2	2			
37	92990–06600	WASHER, PLATE	2	2	2			
38	90480–06M43	GROMMET	2		2			FOR USA,JPN
39	97880–06016	SCREW, PAN HEAD	6	6	6			
40	92990–06600	WASHER, PLATE	6	6	6			
41	66T–82370–00	PLUG CAP ASSY	2		2			FOR USA,JPN
42	90465–11M10	CLAMP	2		2			FOR USA,JPN
43	6R7–82361–01	CLAMP, CORD	1	1	1			
44	94702–00040	PLUG, SPARK (NGK B7HS)	2					FOR USA
	94702–00272	PLUG, SPARK (NGK BR7HS)		2				FOR GENE
	94709–00040	PLUG, SPARK (NGK B7HS)			2			FOR JPN
45	6R7–82553–01	EXTENSION, WIRE LEAD	1	1	1			
46	6R7–82560–10	THERMO SWITCH ASSY	1	1	1			
47	97095–06016	BOLT	2	2	2			
48	92995–06100	WASHER, SPRING	2	2	2			
49	62E–82117–20	WIRE, LEAD	1	1	1			
50	90465–13M11	CLAMP	1	1	1			
51	60E–83627–00	LABEL, CAUTION 7	1					FOR USA

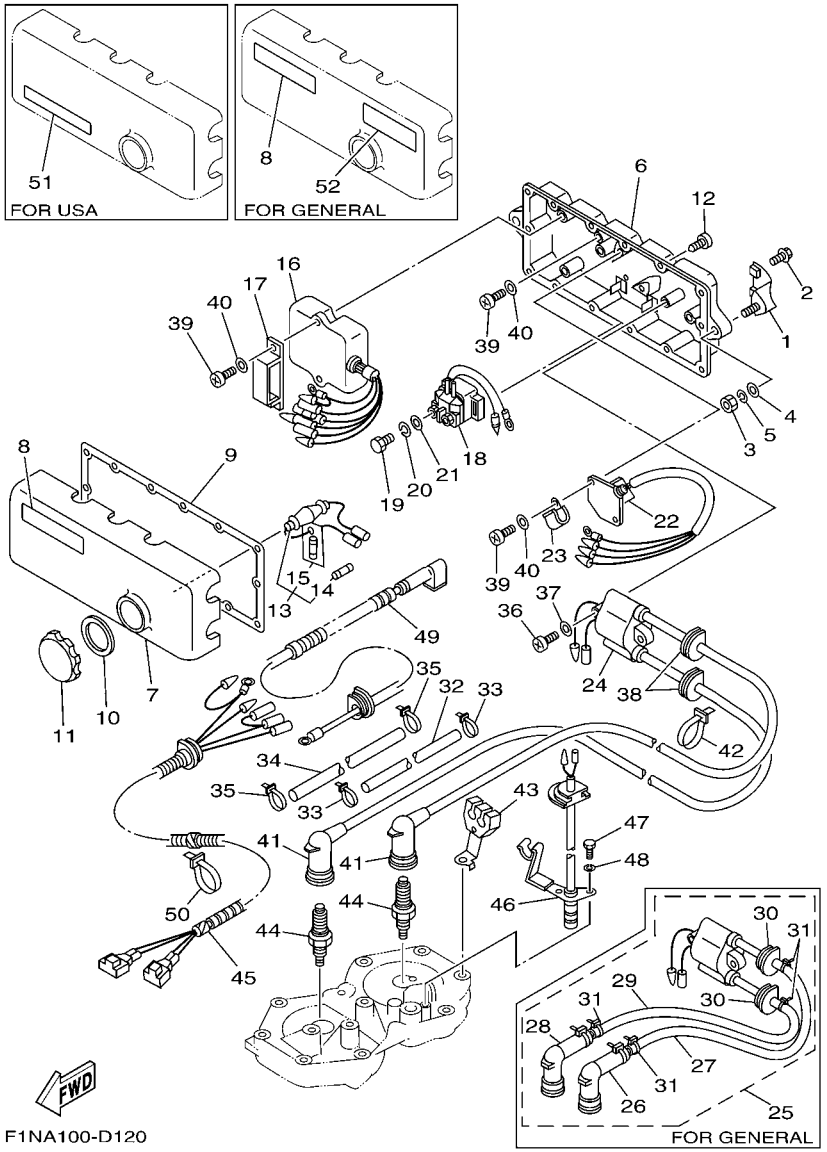

F1NA100-D120

FIG. 12 ELECTRICAL 1

REF. NO.	PART NO.	DESCRIPTION	USA	GENE	JPN			REMARKS
52	6R7–83623–50	MARK 3		1				FOR GENE

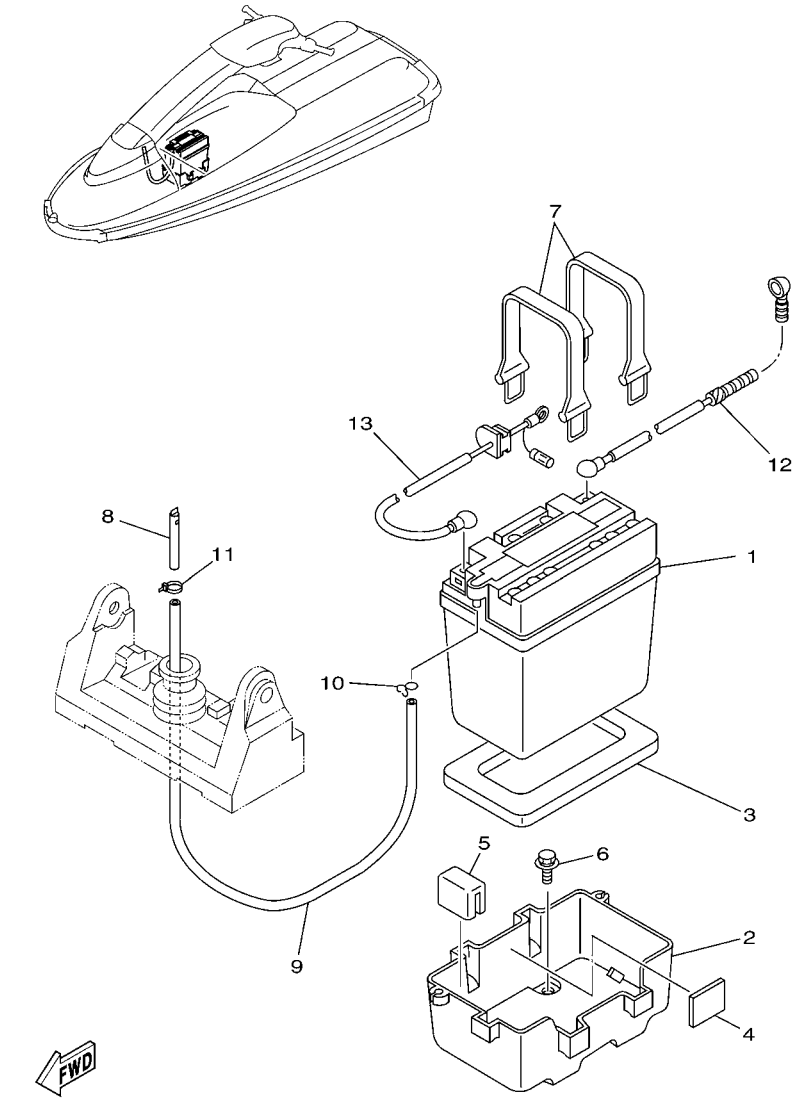

F1NA100-D130

FIG. 13 ELECTRICAL 2

REF. NO.	PART NO.	DESCRIPTION	USA	GENE	JPN			REMARKS
1	EU0–82110–09	BATTERY ASSY (YB16CL-B)	1	1	1			YUASA
2	EW2–68211–00	CASE, BATTERY	1	1	1			
3	EU0–68221–00	PAD, BATTERY 1	1	1	1			
4	EU0–68221–30	PAD, BATTERY 2	3	3	3			
5	EW2–68221–00	PAD, BATTERY	1	1	1			
6	90119–06920	BOLT, WITH WASHER	4	4	4			
7	EU0–68218–04	BAND, BATTERY	2	2	2			
8	EW2–62149–00	PIPE, VENTILATION 1	1	1	1			
9	EU0–67856–40	HOSE,AIRVENT 3	1	1	1			
10	90467–08M10	CLIP	1	1	1			
11	90465–11M10	CLAMP	1	1	1			
12	64V–82117–00	WIRE, LEAD	1	1	1			
13	6R7–82117–11	WIRE, LEAD	1	1	1			

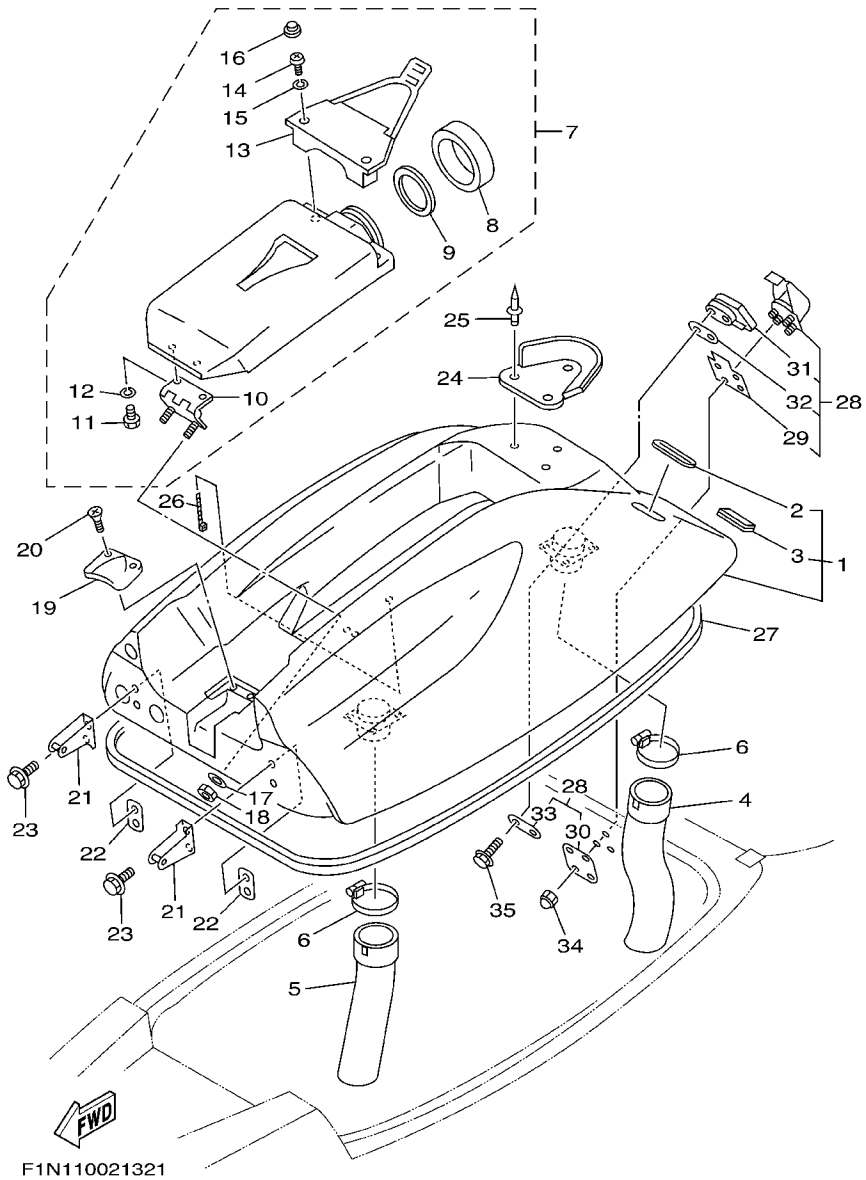

FIG. 14 ENGINE HATCH

REF. NO.	PART NO.	DESCRIPTION	USA	GENE	JPN			REMARKS
1	GM6–6516A–10–33	ENGINE HATCH COMP.	1	1	1			YB
2	FX1–65116–10	.TRIM,HATCH 2	2	2	2			
3	GM6–6516C–00	.TRIM 1	1	1	1			
4	GM6–6213F–00	HOSE,VENTILATOR 1	1	1	1			
5	EW2–62137–00	HOSE, VENTILATOR 2	1	1	1			
6	90601–16875	BAND, HOSE 68	2	2	2			
7	FX1–6591A–10	CASE,ASSY 1	1	1	1			
8	EW2–65912–00	.CAP, CASE	1	1	1			
9	EW2–65913–00	.PACKING, CASE	1	1	1			
10	FX1–6517D–00	.HINGE, LID	1	1	1			
11	97090–06014	.BOLT	2	2	2			
12	92990–06100	.WASHER, SPRING	2	2	2			
13	FX1–6591K–00	.BAND,CASE	1	1	1			
14	92580–06016	.SCREW	2	2	2			
15	92990–06100	.WASHER, SPRING	2	2	2			
16	FX1–6514F–00	.CAP	2	2	2			
17	92990–06200	WASHER, PLAIN	2	2	2			
18	95720–06300	NUT, SELF-LOCKING	2	2	2			
19	A00–62858–02	PLATE, HATCH (FL1)	1	1	1			
20	97780–50316	SCREW, TAPPING	2	2	2			
21	GM6–65136–00	STOPPER HATCH 2	2	2	2			
22	EW2–65137–00	PLATE, STOPPER HATCH 2	2	2	2			
23	90119–06900	BOLT, WITH WASHER	4	4	4			
24	FX1–6514B–00	DAMPER, POLE	1	1	1			
25	90267–48938	RIVET, BLIND	3	3	3			
26	90464–20258	CLAMP	2	2	2			
27	GM6–62664–00	PACKING	1	1	1			

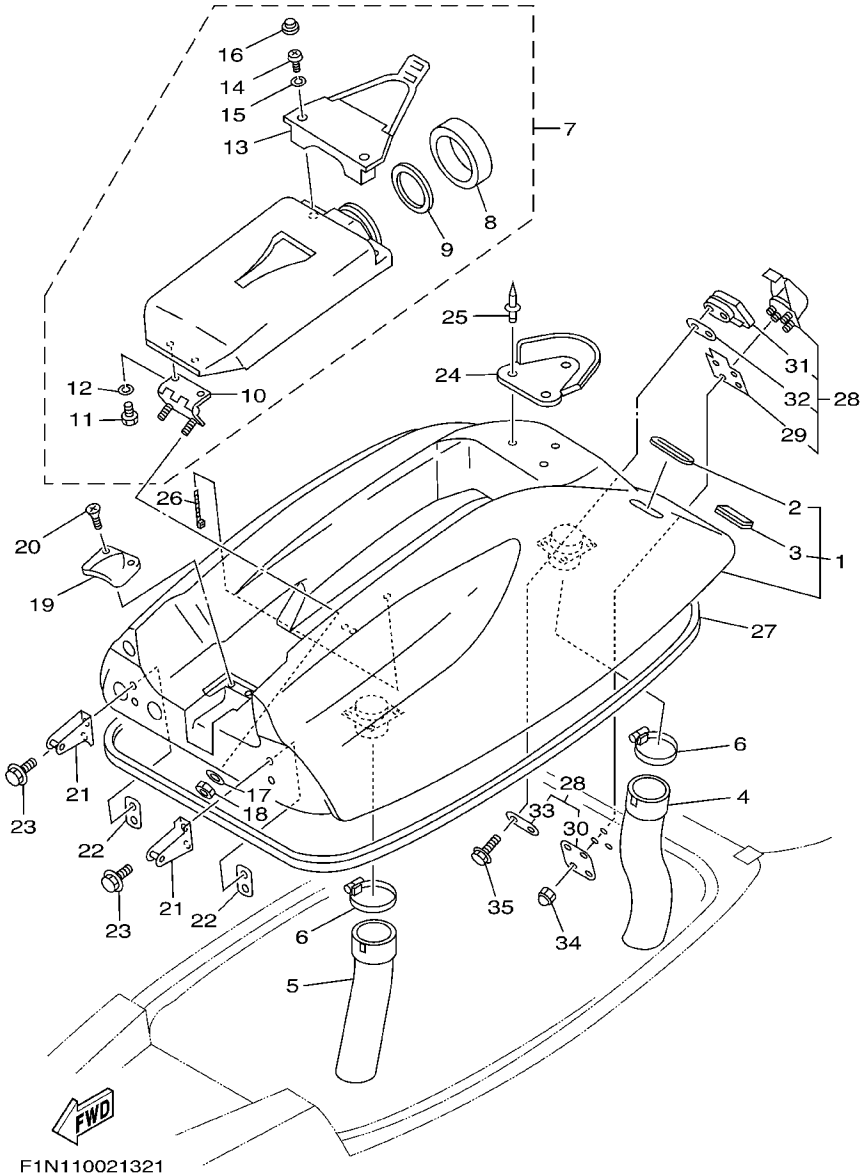

FIG. 14 ENGINE HATCH

REF. NO.	PART NO.	DESCRIPTION	USA	GENE	JPN			REMARKS
28	EW2–62840–10	HATCH LOCK ASSY	1	1	1			
29	EW2–62845–10	.PACKING, HATCH LOCK	1	1	1			
30	EW2–62846–00	.PLATE, HATCH LOCK	1	1	1			
31	EW2–62843–00	.HOOK, HATCH LOCK	1	1	1			
32	EW2–62847–00	.PACKING, HOOK	1	1	1			
33	EW2–62848–00	.PLATE, HOOK	1	1	1			
34	95720–05300	NUT, FLANGE	4	4	4			
35	90119–05923	BOLT, WITH WASHER	2	2	2			

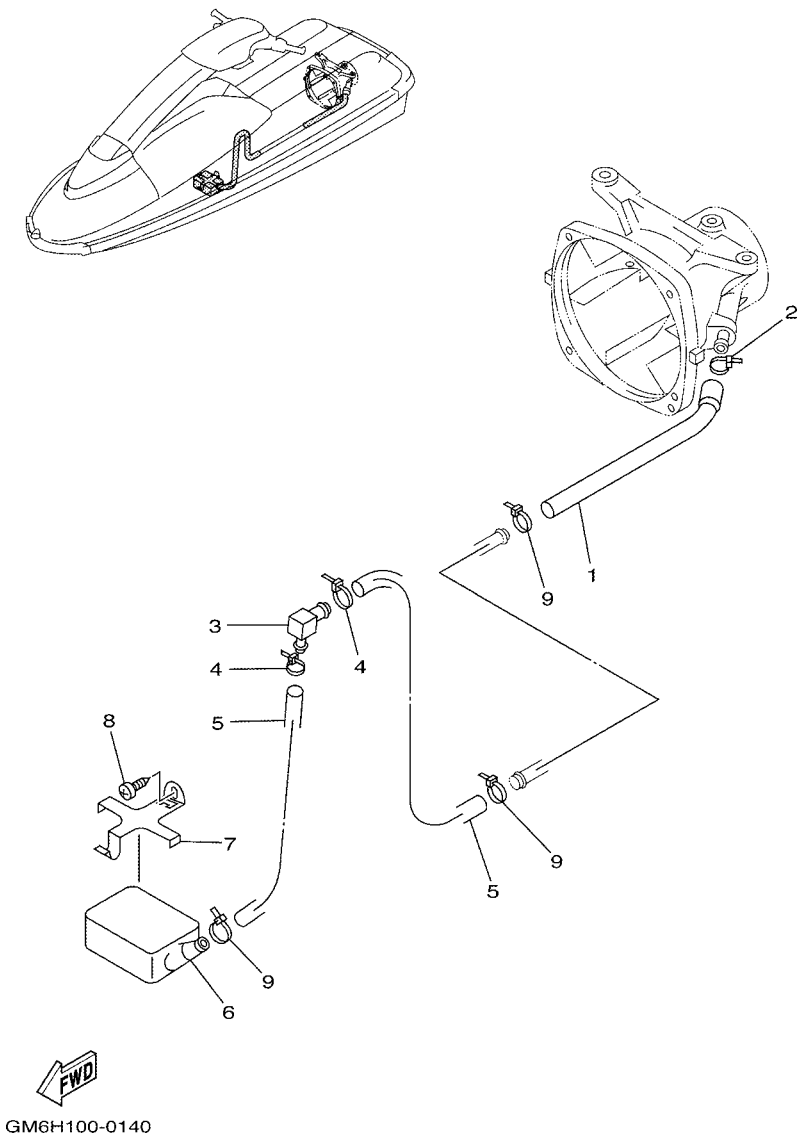

FIG. 15 HULL & DECK

REF. NO.	PART NO.	DESCRIPTION	USA	GENE	JPN			REMARKS
1	90445–14M19	HOSE (L202)	1	1	1			
2	90465–11M10	CLAMP	1	1	1			
3	6K8–51162–00	JOINT, HOSE	1	1	1			
4	90465–13M11	CLAMP	2	2	2			
5	90445–14M04	HOSE (L450)	2	2	2			
6	EU0–67613–00	STRAINER	1	1	1			
7	EW2–67618–00	BASE, STRAINER BLIGE	1	1	1			
8	97780–50114	SCREW, PAN HEAD TAPPING	1	1	1			
9	90465–13M11	CLAMP	3	3	3			

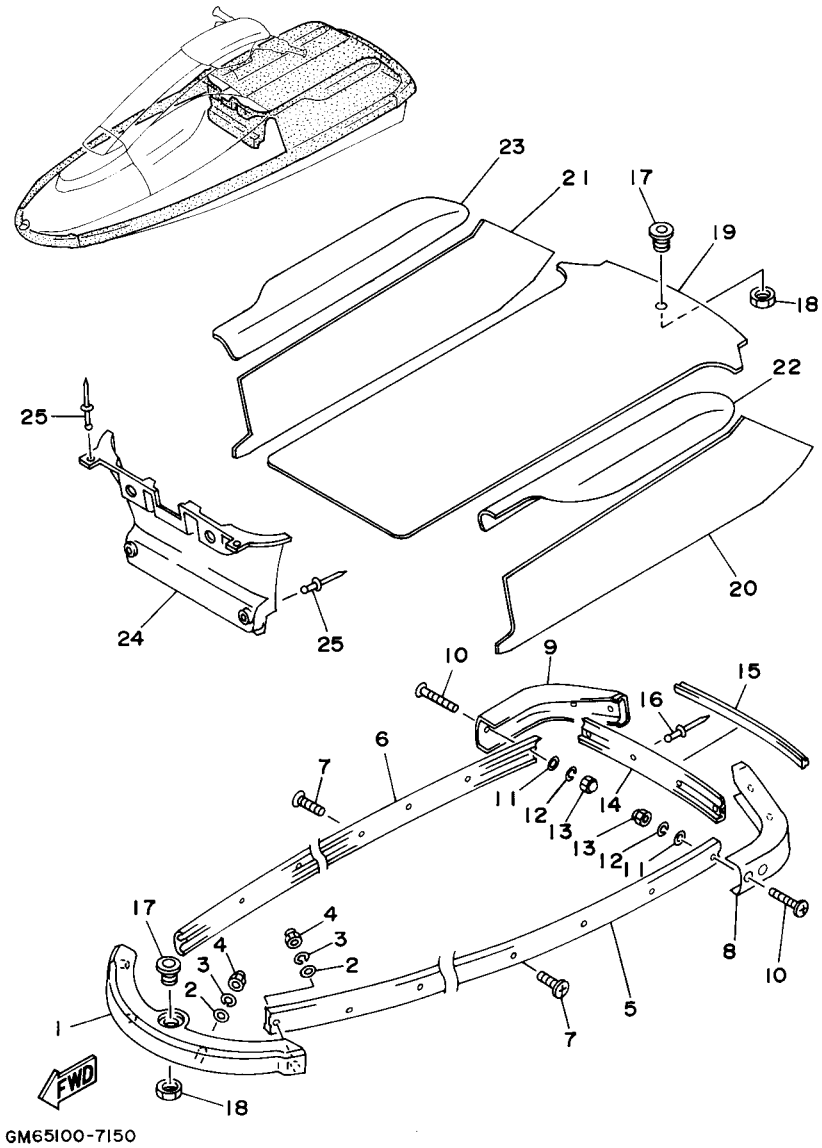

FIG. 16 GUNWALE & MAT

REF. NO.	PART NO.	DESCRIPTION	USA	GENE	JPN			REMARKS
1	GM6–62501–10	BOW GUNWALE COMP.	1	1	1			BL
2	92990–06200	WASHER, PLAIN	4	4	4			
3	92990–06100	WASHER, SPRING	4	4	4			
4	95380–06800	NUT	4	4	4			
5	GM6–62552–10	GUNWALE,SIDE 1	1	1	1			BL
6	GM6–62553–10	GUNWALE, SIDE 2	1	1	1			BL
7	90149–05962	SCREW	22	22	22			
8	GM6–6251D–10	GUNWALE, STERN 1	1	1	1			YB
9	GM6–6251E–10	GUNWALE, STERN 2	1	1	1			YB
10	90149–05960	SCREW	8	8	8			
11	92990–05200	WASHER, PLAIN	8	8	8			
12	92990–05100	WASHER, SPRING	8	8	8			
13	90179–05964	NUT	8	8	8			
14	GM6–6252C–10	COVER, GUNWALE 1	1	1	1			BL
15	GM6–6252D–10	COVER, GUNWALE 2	1	1	1			BL
16	90267–48932	RIVET, BLIND	4	4	4			
17	FN8–61651–01	ROPE HOLE	2	2	2			
18	EU0–61652–00	NUT	2	2	2			
19	GM6–6351B–00	MAT,LOWER	1	1	1			BL
20	GM6–6351C–00	MAT, SIDE 1	1	1	1			BL
21	GM6–6351D–00	MAT,SIDE 2	1	1	1			BL
22	GM6–6521C–10	PAD,1	1	1	1			BL
23	GM6–6521D–10	PAD,2	1	1	1			BL
24	GM6–6351E–10	MAT,BOW	1	1	1			YB
25	90267–48963	RIVET, BLIND	4	4	4			

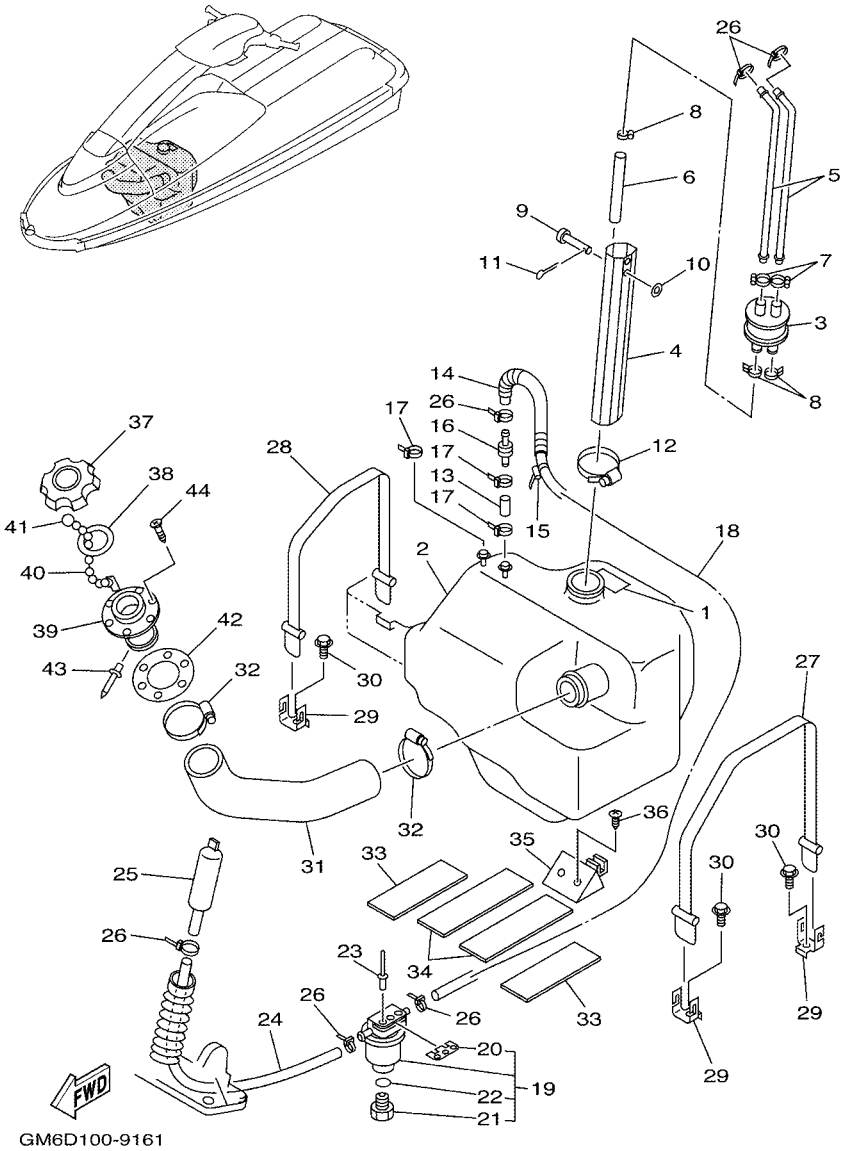

FIG. 17 FUEL TANK

REF. NO.	PART NO.	DESCRIPTION	USA	GENE	JPN			REMARKS
1	GM6–6418D–00	LABEL,FUEL TANK	1	1				FOR USA,GENE
2	EW2–67711–01	TANK, FUEL	1	1	1			
3	FJ0–67713–00	PIPE, JOINT	1	1	1			
4	EW2–67716–01	PIPE, FILLER	1	1	1			
5	EW2–67714–02	PIPE, SUCTION 3	2	2	2			
6	90445–11903	HOSE (L105)	1	1	1			
7	90601–11062	BAND, HOSE 11	2	2	2			
8	90467–11032	CLIP	3	3	3			
9	91790–05040	PIN, CLEVIS	1	1	1			
10	92990–05600	WASHER, PLATE	1	1	1			
11	91490–16010	PIN, COTTER	1	1	1			
12	90601–16274	BAND, HOSE 62	1	1	1			
13	90699–50003	HOSE	1	1	1			
14	90446–14M30	TUBE	1	1	1			
15	90465–13M11	CLAMP	1	1	1			
16	EU0–67767–31	CHECK VALVE	1	1	1			
17	90465–11M10	CLAMP	3	3	3			
18	90699–50120	HOSE	1	1	1			
19	EW2–62140–00	FILTER, VENT ASSY	1	1	1			
20	EW2–62142–00	.PLATE, FILTER	1	1	1			
21	70R–24543–00	.PLUG, DRAIN	1	1	1			
22	70R–24489–00	.O-RING	1	1	1			
23	90267–48925	RIVET, BLIND	2	2	2			
24	90699–50045	HOSE	1	1	1			
25	EW2–62150–00	PIPE,VENTILATION 3	1	1	1			
26	90465–11M10	CLAMP	6	6	6			
27	EW2–67821–30	BAND, FUEL TANK	1	1	1			

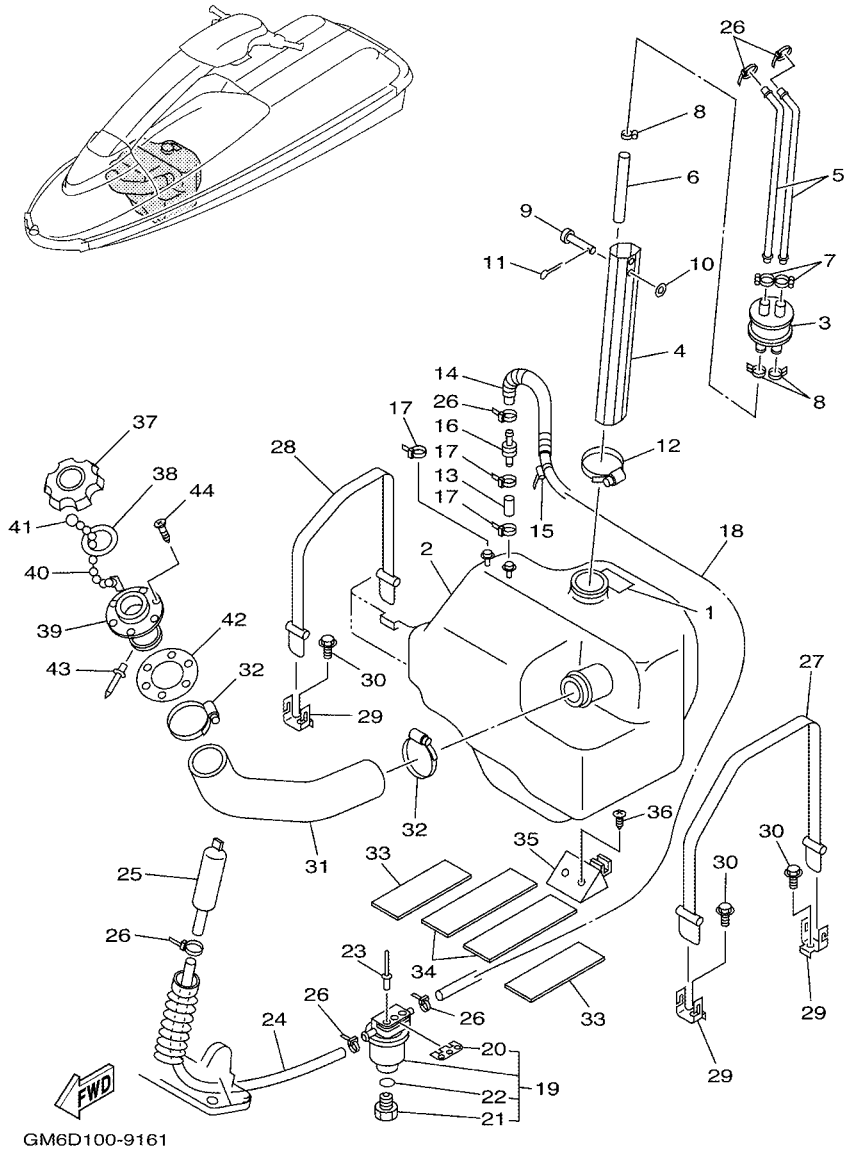

FIG. 17 FUEL TANK

REF. NO.	PART NO.	DESCRIPTION	USA	GENE	JPN			REMARKS
28	EW2–67821–00	BAND, FUEL TANK	1	1	1			
29	EW2–65772–00	HOOK A	3	3	3			
30	90105–06900	BOLT, FLANGE	3	3	3			
31	GM6–67844–10	HOSE	1	1	1			
32	90601–15573	BAND, HOSE 55	2	2	2			
33	GM6–67593–00	MAT	2	2	2			
34	GM6–67594–00	MAT	2	2	2			
35	EW2–67822–01	DAMPER FUEL TANK	1	1	1			
36	97780–50114	SCREW, PAN HEAD TAPPING	2	2	2			
37	FN8–67831–01	CAP, FUEL FILLER	1	1	1			YB
38	EU0–67832–00	PACKING 1	1	1	1			
39	FN8–67833–00	SOCKET	1	1	1			
40	EU0–67835–00	CHAIN BALL	1	1	1			
41	EU0–67839–00	COUPLING	1	1	1			
42	EU0–67834–00	PACKING, FUEL FILLER	1	1	1			
43	90267–40935	RIVET, BLIND	1	1	1			
44	EU0–67869–00	SCREW, FLAT HEAD	6	6	6			

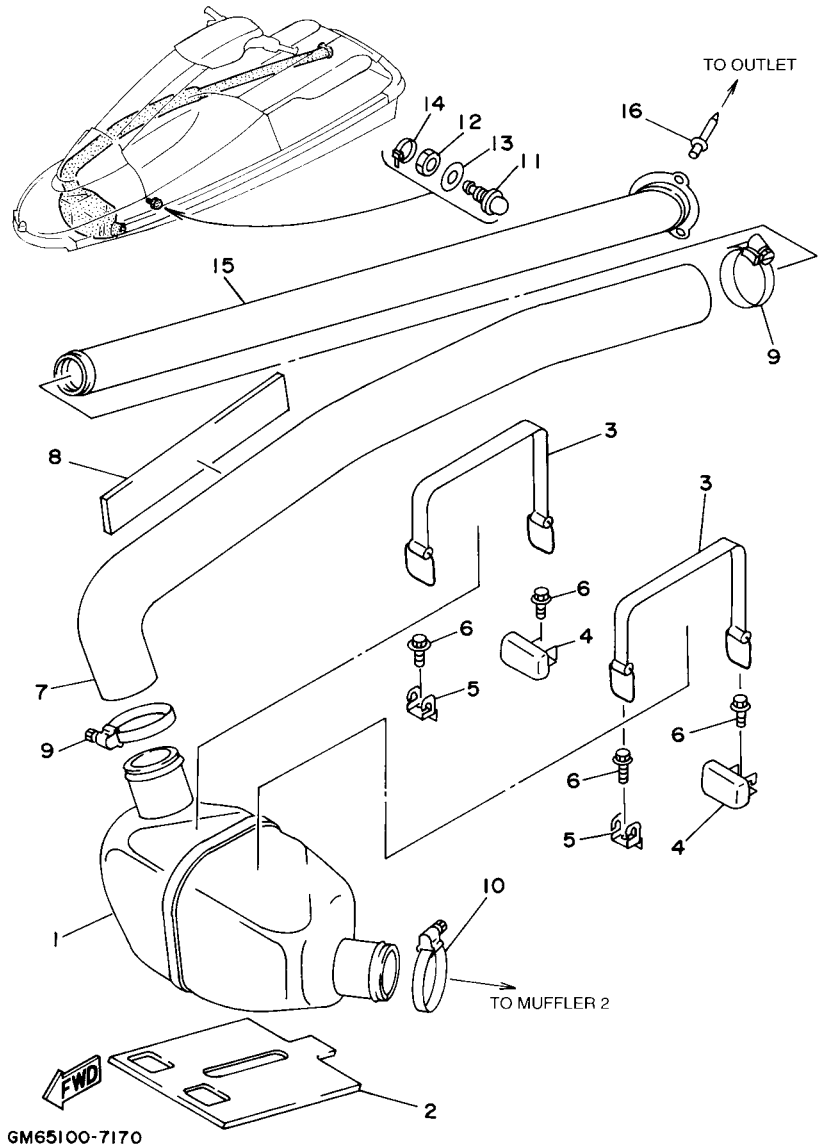

FIG. 18 EXHAUST 2

REF. NO.	PART NO.	DESCRIPTION	USA	GENE	JPN			REMARKS
1	GM6–67550–00	WATER LOCK	1	1	1			
2	GM6–6755J–00	MAT,WATER LOCK	1	1	1			
3	EU0–68218–04	BAND, BATTERY	2	2	2			
4	FX1–65760–00	HOOK B ASSY	2	2	2			
5	EW2–65772–00	HOOK A	2	2	2			
6	90105–06900	BOLT, FLANGE	4	4	4			
7	GM6–67555–00	HOSE	1	1	1			
8	GM6–63844–00	MAT	1	1	1			
9	90601–16875	BAND, HOSE 68	2	2	2			
10	90601–16875	BAND, HOSE 68	1	1	1			
11	GH7–6753B–00	PILOT,WATER	1	1	1			
12	GP7–61652–00	NUT	1	1	1			
13	92990–14200	WASHER, PLAIN	1	1	1			
14	90465–11M10	CLAMP	1	1	1			
15	GM6–67565–00	THRU-HULL,EXHAUST	1	1	1			
16	90267–48930	RIVET, SEALD	3	3	3			

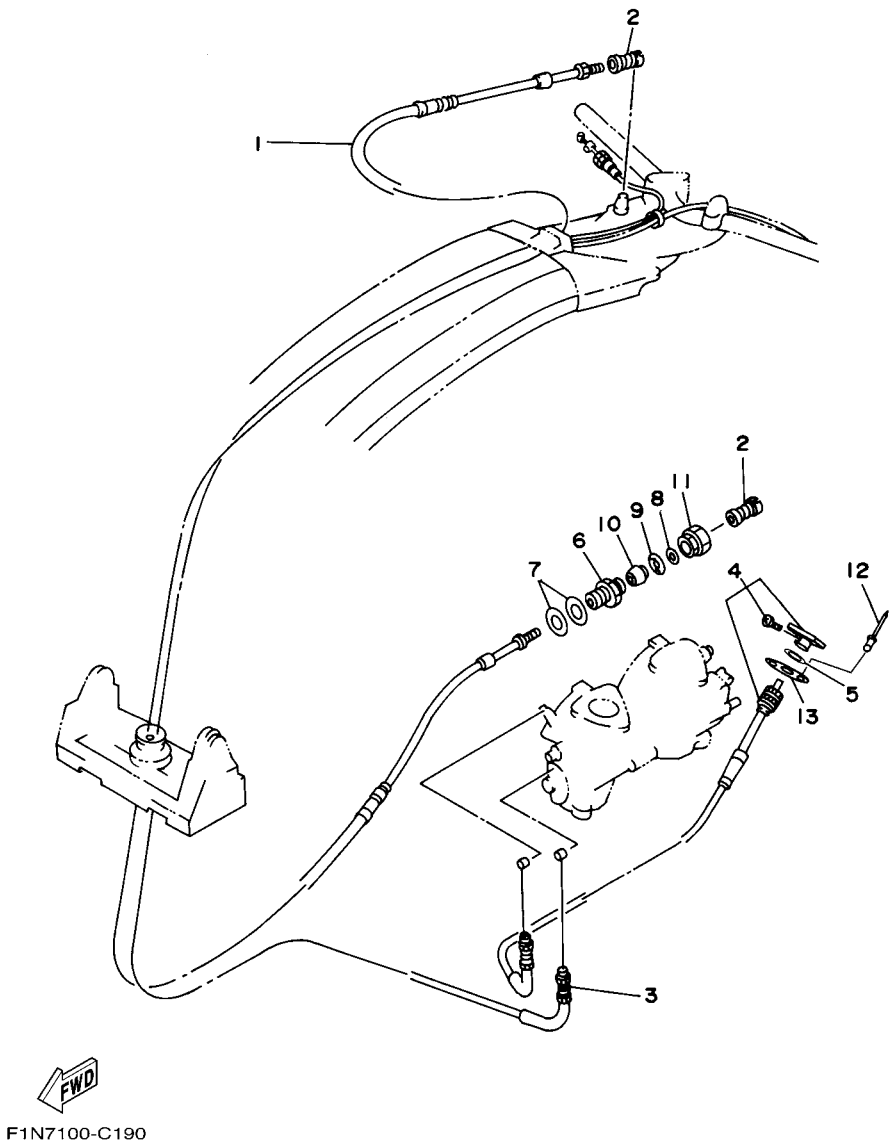

FIG. 19 CONTROL CABLE

REF. NO.	PART NO.	DESCRIPTION	USA	GENE	JPN			REMARKS
1	GM6–61481–00	CABLE, STEERING	1	1	1			
2	EU0–61461–30	SHAFT, JOINT BALL	2	2	2			
3	GM6–67252–00	CABLE, THROTTLE	1	1	1			
4	GM6–67242–00	CABLE, CHOKE	1	1	1			
5	90201–11008	WASHER, PLATE	1	1	1			
6	EU0–61436–00	BODY,CABLE CONNECTOR	1	1	1			
7	EU0–61438–00	PACKING (C)	2	2	2			
8	EU0–61446–00	WASHER 30	1	1	1			
9	EU0–61486–00	STOPPER	1	1	1			
10	EU0–61435–00	SEAL, PIPE 30	1	1	1			
11	EU0–62694–00	CAP	1	1	1			
12	90267–40945	RIVET, BLIND	2	2	2			
13	90209–12920	WASHER	1	1	1			

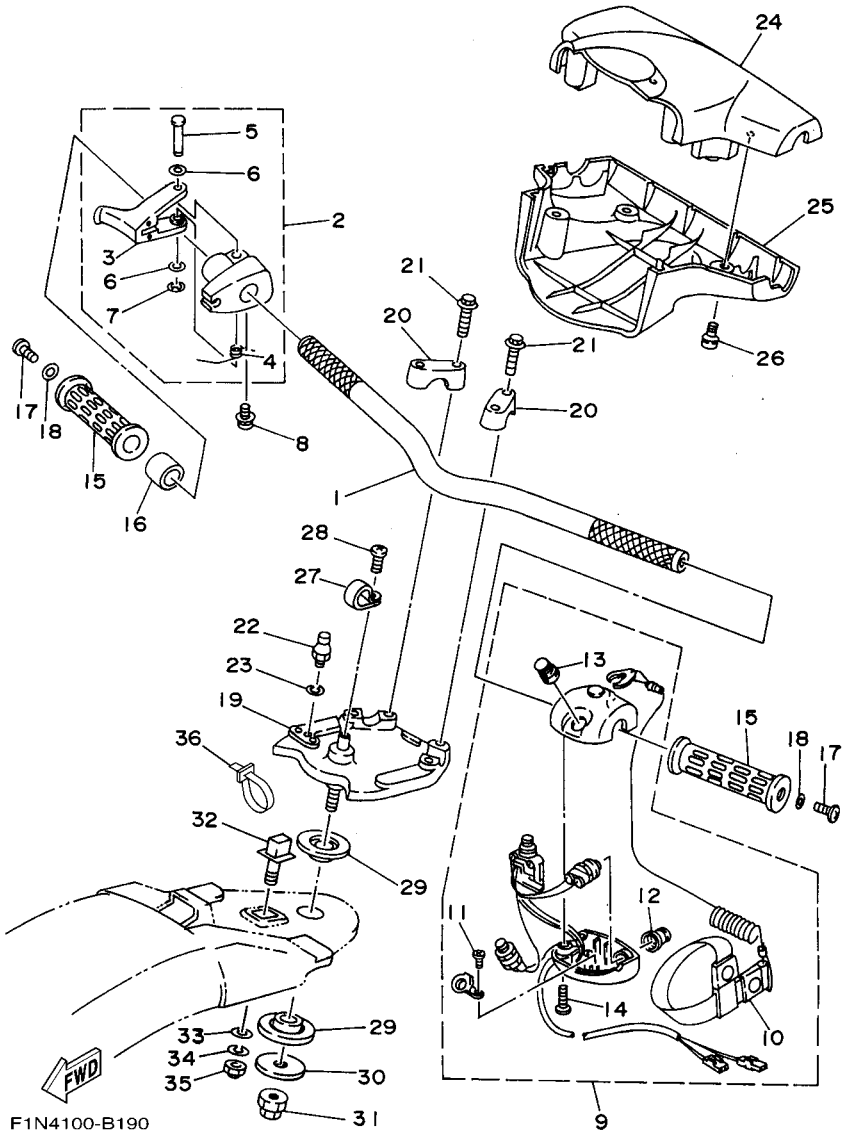

FIG. 20 STEERING 1

REF. NO.	PART NO.	DESCRIPTION	USA	GENE	JPN			REMARKS
1	FX1–61552–00	HANDLE	1	1	1			
2	EW2–67250–02	THROTTLE LEVER ASSY	1	1	1			
3	EW2–67255–00	.LEVER, THROTTLE	1	1	1			
4	EW2–67256–00	.SPRING	1	1	1			
5	EW2–67257–01	.SHAFT	1	1	1			
6	EW2–67258–01	.WASHER	2	2	2			
7	EW2–67259–01	.E-RING	1	1	1			
8	90159–05900	SCREW, WITH WASHER	1	1	1			
9	EW2–68310–04	SWITCH BOX ASSY	1	1	1			
10	EW2–68348–00	.LANYARD, STOP SWITCH	1	1	1			
11	97880–03008	.SCREW, PAN HEAD	2	2	2			
12	FK7–68312–02	.STOP BUTTON COMP	1	1	1			
13	FK7–68313–02	.START BUTTON COMP.	1	1	1			
14	97880–05025	.SCREW, PAN HEAD	1	1	1			
15	EW2–61553–00	GRIP, HANDLE 1	2	2	2			
16	90560–22281	SPACER	1	1	1			
17	90149–05959	SCREW	2	2	2			
18	90201–05928	WASHER, PLATE	2	2	2			
19	EW2–61540–11	BRAKE, ASSY.	1	1	1			
20	EU0–23814–01	HOLDER, HANDLE LOWER	2	2	2			
21	90105–08902	BOLT, FLANGE	4	4	4			
22	EU0–61461–02	STUD, JOINT BALL	1	1	1			
23	92990–06100	WASHER, SPRING	1	1	1			
24	FX1–6143D–20	PAD, STEERING 1	1	1	1			YB
25	FX1–6143E–20	PAD, STEERING 2	1	1	1			YB
26	90149–05937	SCREW	4	4	4			
27	90600–91728	CLIP, NYLON 17	1	1	1			

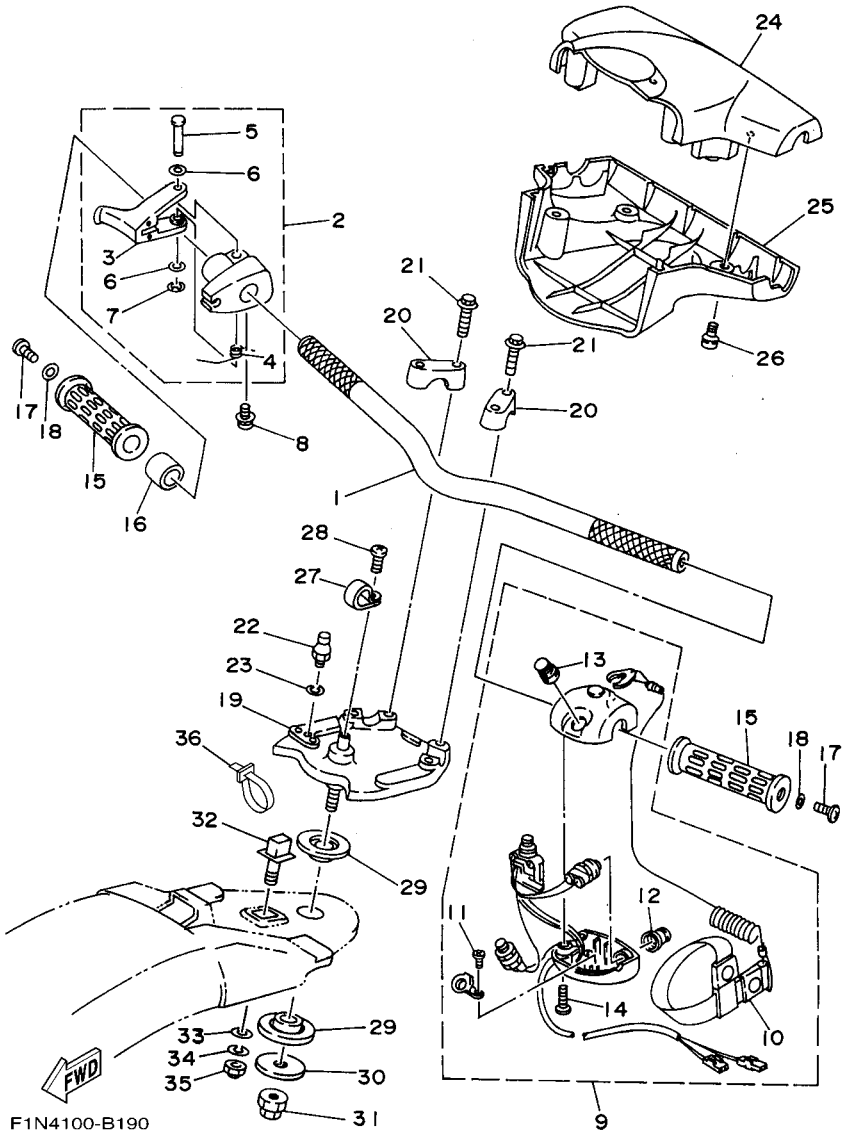

FIG. 20 STEERING 1

REF. NO.	PART NO.	DESCRIPTION	USA	GENE	JPN			REMARKS
28	98980–04010	SCREW, BIND	1	1	1			
29	EW2–61417–00	BEARING, COLUMN	2	2	2			
30	EW2–61419–00	WASHER, STEERING	1	1	1			
31	90179–12933	NUT	1	1	1			
32	EW2–61314–00	PIN, STOPPER 1	1	1	1			
33	92990–10200	WASHER, PLAIN	1	1	1			
34	92990–10100	WASHER, SPRING	1	1	1			
35	90176–10915	NUT, CROWN	1	1	1			
36	90465–13M11	CLAMP	1	1	1			

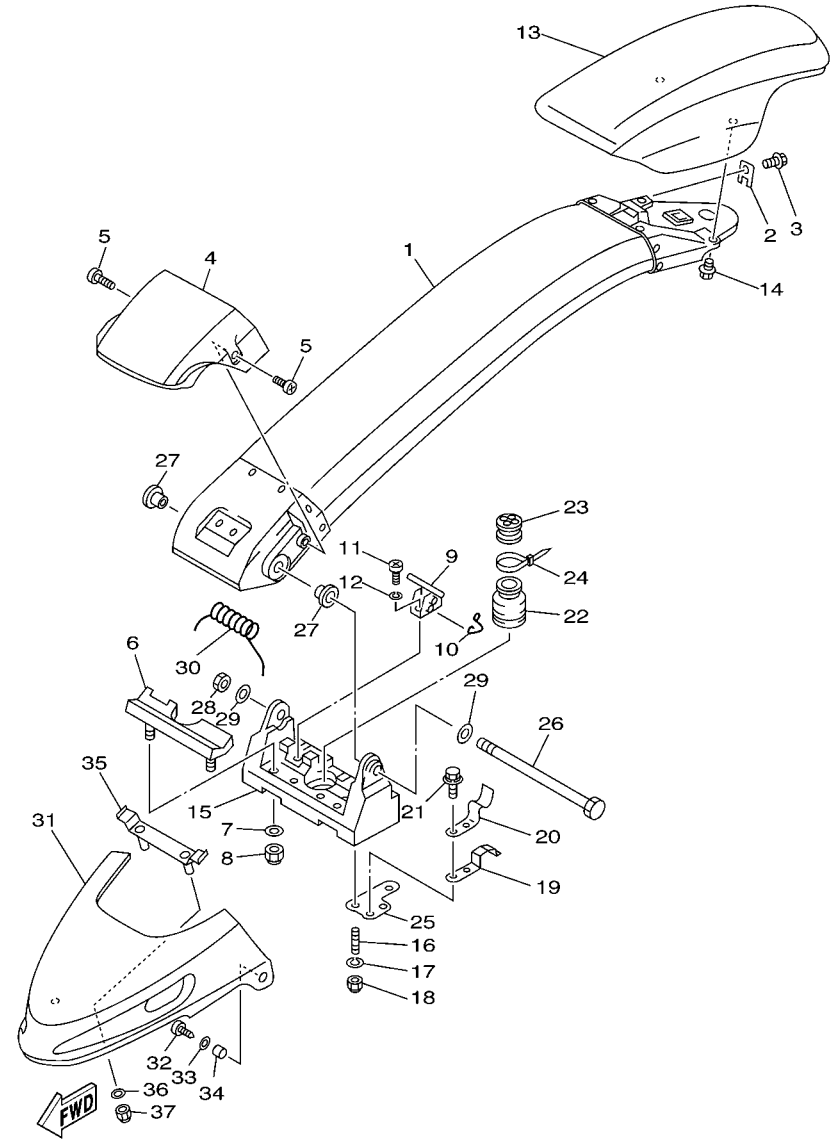

FIG. 21 STEERING 2

REF. NO.	PART NO.	DESCRIPTION	USA	GENE	JPN			REMARKS
1	GM6–6491A–02–P2	STEERING POLE COMP.	1	1	1			SC1
2	FX1–61468–00	STOPPER, CABLE	1	1	1			
3	90119–06913	BOLT, WITH WASHER	1	1	1			
4	FX1–6492E–10	COVER,POLE	1	1	1			BL
5	90149–06997	SCREW	2	2	2			
6	FX1–61337–00	STOPPER, POLE	1	1	1			
7	92990–06200	WASHER, PLAIN	2	2	2			
8	95720–06300	NUT, SELF-LOCKING	2	2	2			
9	FX1–61105–00	STOPPER PIN ASSY	1	1	1			
10	EW2–61395–30	SPRING, TORSION	1	1	1			
11	97880–05012	SCREW, PAN HEAD	2	2	2			
12	92990–05100	WASHER, SPRING	2	2	2			
13	GM6–6142A–30	STEERING PAD COMP	1	1	1			LNS6
14	90119–06918	BOLT, WITH WASHER	2	2	2			
15	FX1–6133C–12	BRACKET,PIVOT	1	1	1			
16	95680–08630	BOLT, STUD	4	4	4			
17	92990–08100	WASHER, SPRING	4	4	4			
18	95720–08300	NUT, SELF-LOCKING	4	4	4			
19	GM6–6215G–00	PLATE,GUIDE	2	2	2			
20	GM6–65135–00	STOPPER, HATCH 1	2	2	2			
21	90119–06900	BOLT, WITH WASHER	4	4	4			
22	FX1–61338–00	GROMMET	1	1	1			
23	EW2–61465–00	PACKING, CABLE	1	1	1			
24	90601–20006	BAND	1	1	1			
25	GM6–6133B–00	PLATE, BRACKET	2	2	2			
26	FX1–6134L–00	SHAFT,PIVOT	1	1	1			
27	EW2–61344–01	BUSH	2	2	2			

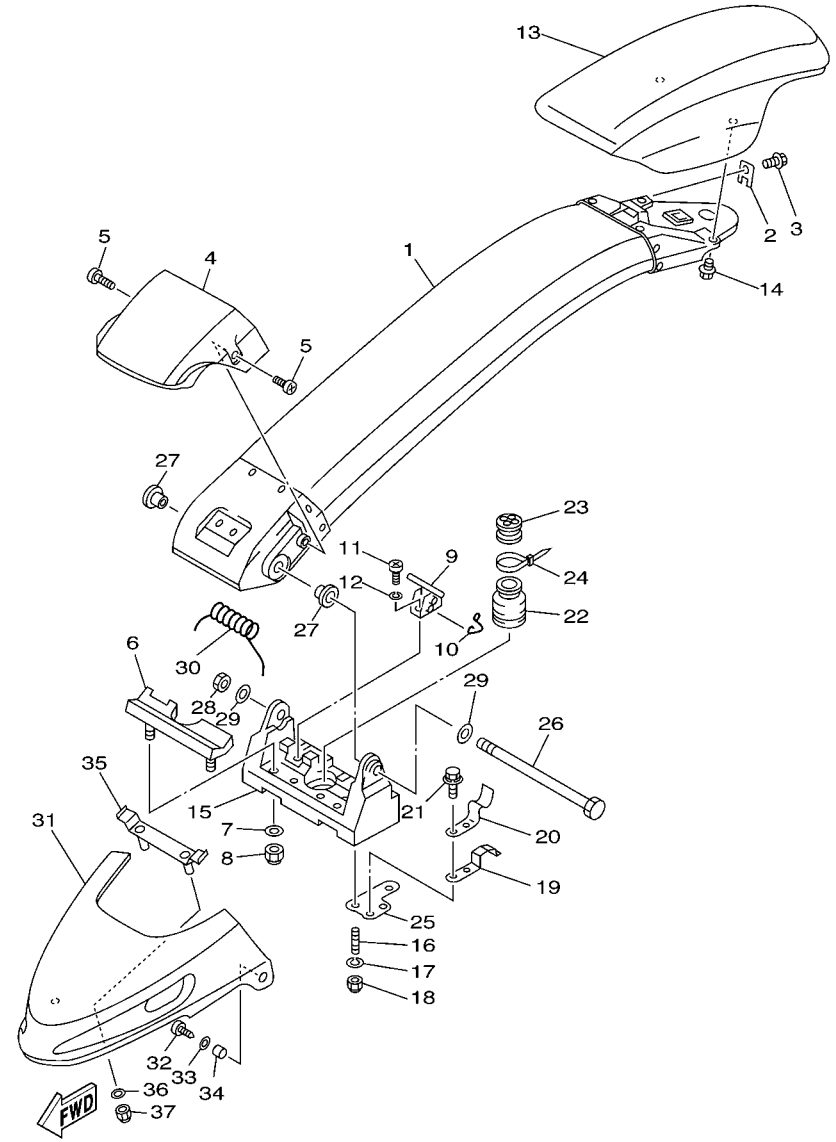

GM69100-8200

FIG. 21 STEERING 2

REF. NO.	PART NO.	DESCRIPTION	USA	GENE	JPN			REMARKS
28	90170–14913	NUT	1	1	1			
29	92990–14200	WASHER, PLAIN	2	2	2			
30	FX1–61391–00	SPRING, PIVOT	1	1	1			
31	GM6–6492J–30	COVER,PIVOT 1	1	1	1			YB
32	97780–60520	SCREW, TAPPING	2	2	2			
33	92990–06200	WASHER, PLAIN	1	1	1			
34	90387–06916	COLLAR	2	2	2			
35	GM6–64949–00	BRACKET	1	1	1			
36	92990–06200	WASHER, PLAIN	2	2	2			
37	95720–06300	NUT, SELF-LOCKING	2	2	2			

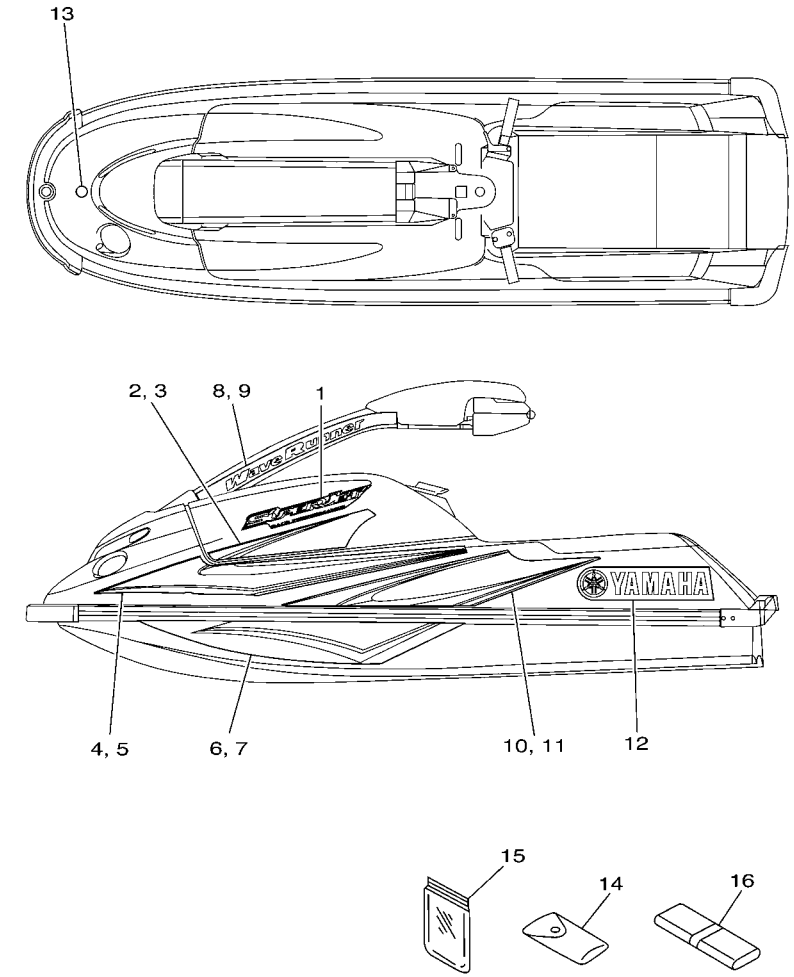

F1N7100-C220

FIG. 22 GRAPHICS

REF. NO.	PART NO.	DESCRIPTION	USA	GENE	JPN			REMARKS
1	F1N–6417B–10	GRAPHIC 1	2	2	2			
2	F1N–6417C–30	GRAPHIC 2	1	1	1			LH
3	F1N–6417C–40	GRAPHIC 2	1	1	1			RH
4	F1N–6417D–30	GRAPHIC 3	1	1	1			LH
5	F1N–6417D–40	GRAPHIC 3	1	1	1			RH
6	F1N–6417E–30	GRAPHIC 4	1	1	1			LH
7	F1N–6417E–40	GRAPHIC 4	1	1	1			RH
8	F1N–6417F–30	GRAPHIC 5	1	1	1			LH
9	F1N–6417F–40	GRAPHIC 5	1	1	1			RH
10	F1N–6417G–30	GRAPHIC 6	1	1	1			LH
11	F1N–6417G–40	GRAPHIC 6	1	1	1			RH
12	F1N–64114–00	MARK, YAMAHA A	2	2	2			
13	GM6–6411H–00	EMBLEM, TUNING FORK	1	1	1			
14	EU0–65986–00	TOOL SET	1	1				FOR USA,GENE
	EU0–65986–10	TOOL SET			1			FOR JPN
15	EU0–65901–01	TOOL BAG	1	1	1			
16	GM6–65987–00	BAG	1	1	1			

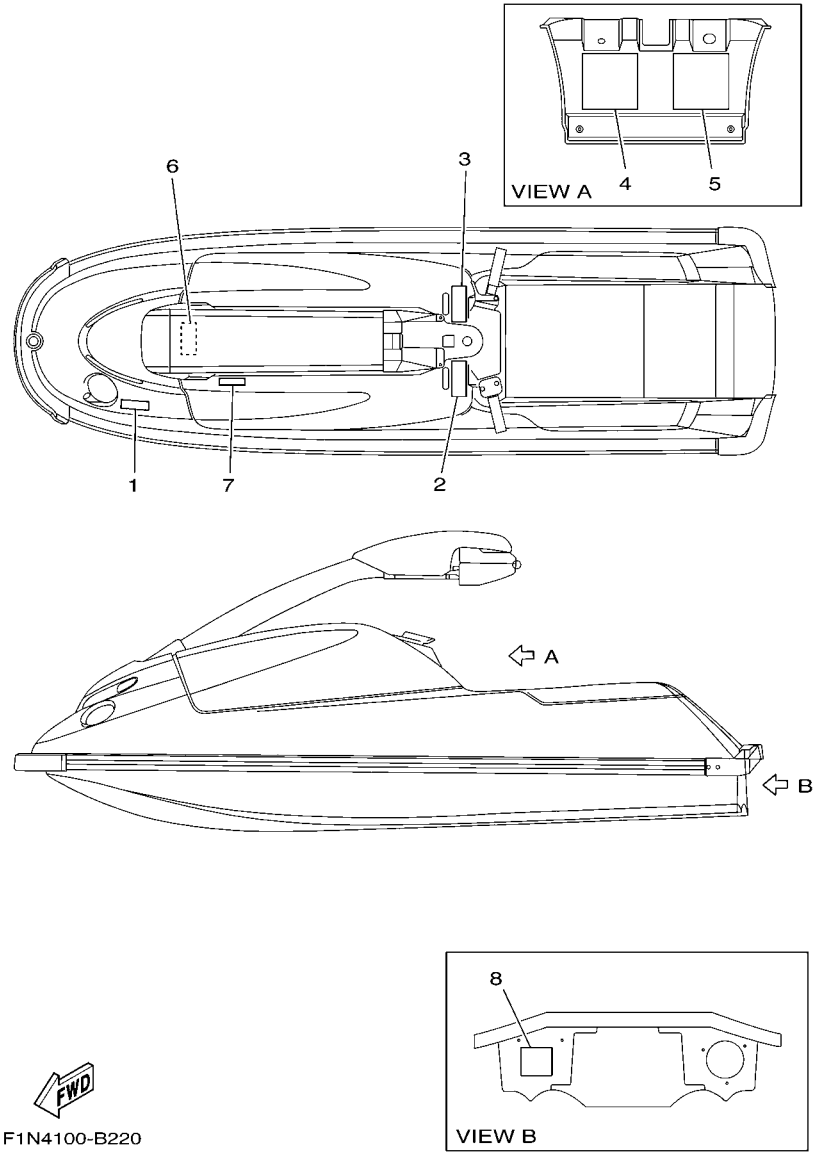

FIG. 23 IMPORTANT LABELS

REF. NO.	PART NO.	DESCRIPTION	USA	GENE	JPN			REMARKS
1	F1N–6415B–00	LABEL, WARNING(FUEL)	1					
2	GM6–641B1–01	LABEL, WARNING UNIFORM 1	1					
3	GM6–641B1–10	LABEL, WARNING UNIFORM 1	1					
4	GM6–641B2–00	LABEL, WARNING UNIFORM 2	1					
5	GM6–641B2–10	LABEL, WARNING UNIFORM 2	1					
6	F1N–641DB–00	LABEL, WARNING BATTERY	1					
7	GK5–6411B–00	PLATE,ASSY	1					
8	EU0–64188–00	LABEL, RIGHTING	1					

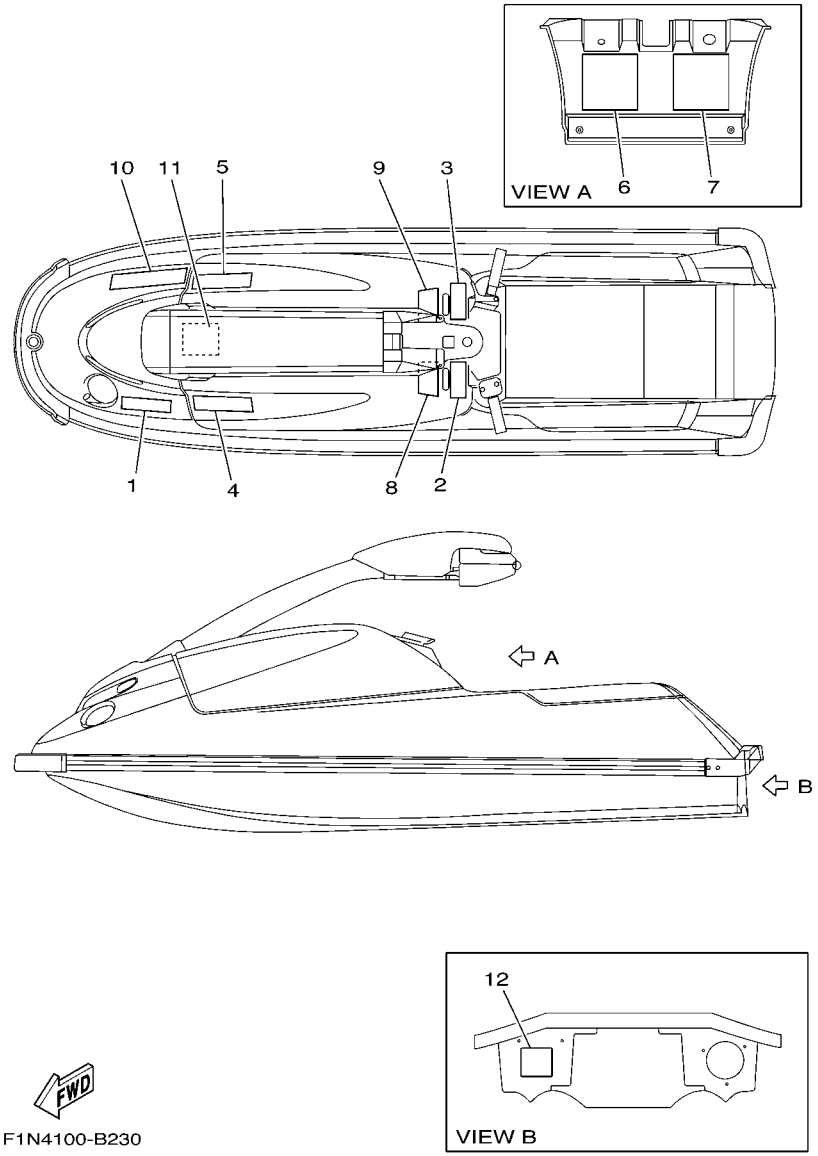

FIG. 24 IMPORTANT LABELS 2

REF. NO.	PART NO.	DESCRIPTION	USA	GENE	JPN			REMARKS
1	F1N–6415B–10	LABEL, WARNING(FUEL)		1				
2	GM6–641B1–21	LABEL, WARNING UNIFORM 1		1				
3	GM6–641B1–10	LABEL, WARNING UNIFORM 1		1				
4	GM6–641B1–41	LABEL, WARNING UNIFORM 1		1				
5	GM6–641B1–50	LABEL, WARNING UNIFORM 1		1				
6	GM6–641B2–00	LABEL, WARNING UNIFORM 2		1				
7	GM6–641B2–10	LABEL, WARNING UNIFORM 2		1				
8	GM6–641B2–40	LABEL, WARNING UNIFORM 2		1				
9	GM6–641B2–50	LABEL, WARNING UNIFORM 2		1				
10	GA7–6416H–20	LABEL,WARNING(FRANCE)		1				
11	F1N–641DB–10	LABEL, WARNING BATTERY		1				
12	EU0–64188–00	LABEL, RIGHTING		1				

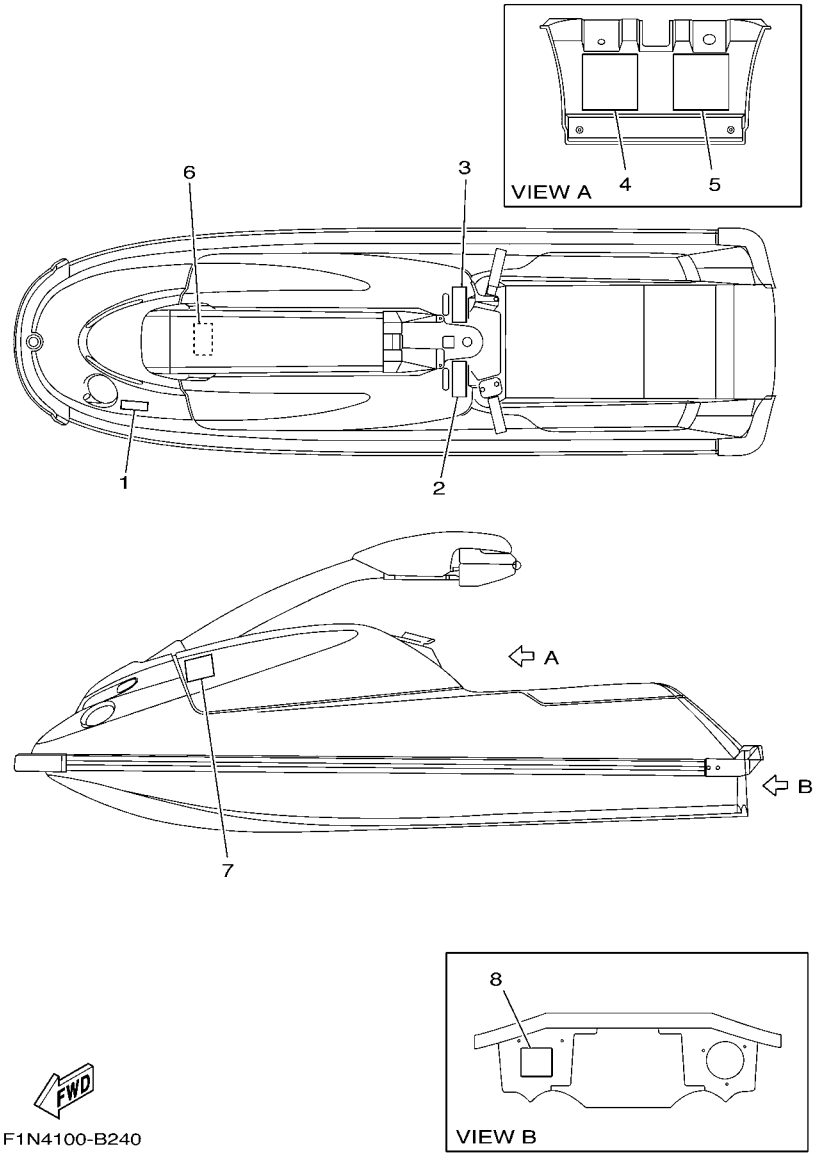

FIG. 25 IMPORTANT LABELS 3

REF. NO.	PART NO.	DESCRIPTION	USA	GENE	JPN			REMARKS
1	F1N–6415B–20	LABEL, WARNING(FUEL)			1			
2	GM6–641B1–60	LABEL, WARNING UNIFORM 1			1			
3	GM6–641B1–70	LABEL, WARNING UNIFORM 1			1			
4	GM6–641B2–60	LABEL, WARNING UNIFORM 2			1			
5	GM6–641B2–70	LABEL, WARNING UNIFORM 2			1			
6	F1N–641DB–20	LABEL, WARNING BATTERY			1			
7	EW3–64197–00	PLATE CAPACITY			1			
8	EU0–64188–00	LABEL, RIGHTING			1			

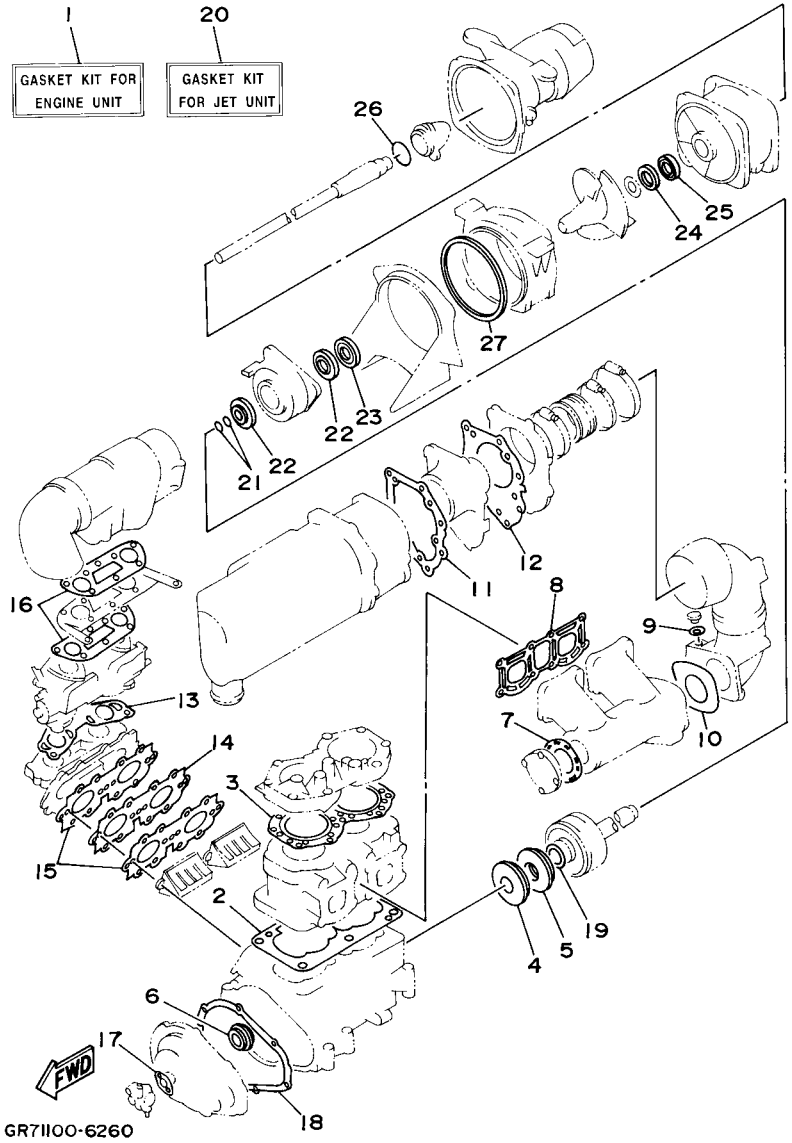

FIG. 26 REPAIR KIT 1

REF. NO.	PART NO.	DESCRIPTION	USA	GENE	JPN			REMARKS
1	64U–W0001–00	GASKET KIT FOR ENGINE UNIT	1	1	1			
2	6M6–11351–A2	.GASKET, CYLINDER	1	1	1			
3	62T–11181–00	.GASKET, CYLINDER HEAD 1	1	1	1			
4	93102–36M33	.OIL SEAL	1	1	1			
5	93101–36M46	.OIL SEAL	1	1	1			
6	93103–32M01	.OIL SEAL	1	1	1			
7	6M6–14739–A1	.GASKET, MUFFLER DAMPER 1	1	1	1			
8	61X–14613–A0	.GASKET, EXHAUST PIPE	1	1	1			
9	90430–08020	.GASKET	1	1	1			
10	6R7–14749–A0	.GASKET, MUFFLER DAMPER 2	1	1	1			
11	6R7–14755–A0	.GASKET, SILENCER	1	1	1			
12	6R7–41114–A0	.GASKET, EXHAUST OUTER COVER	1	1	1			
13	62T–13556–00	.GASKET, MANIFOLD	1	1	1			
14	62T–13624–00	.PLATE,REED VALVE	1	1	1			
15	62T–13566–00	.GASKET	2	2	2			
16	62T–13674–00	.GASKET, AIR COOLER COVER 1	2	2	2			
17	6R8–13116–A0	.GASKET, PUMP CASE	1	1	1			
18	6M6–81365–A0	.GASKET, HOLE COVER	1	1	1			
19	62T–45127–00	.SEAL	1	1	1			
20	61X–W0001–22	GASKETKIT FOR JET UNIT	1	1	1			
21	93210–17MA4	.O-RING	2	2	2			
22	93101–25M55	.OIL SEAL	2	2	2			
23	93101–25M56	.OIL SEAL	1	1	1			
24	93102–25M34	.OIL SEAL	1	1	1			
25	93101–25M50	.OIL SEAL	1	1	1			
26	93210–46M16	.O-RING	1	1	1			
27	6R7–51117–01	.PACKING	1	1	1			

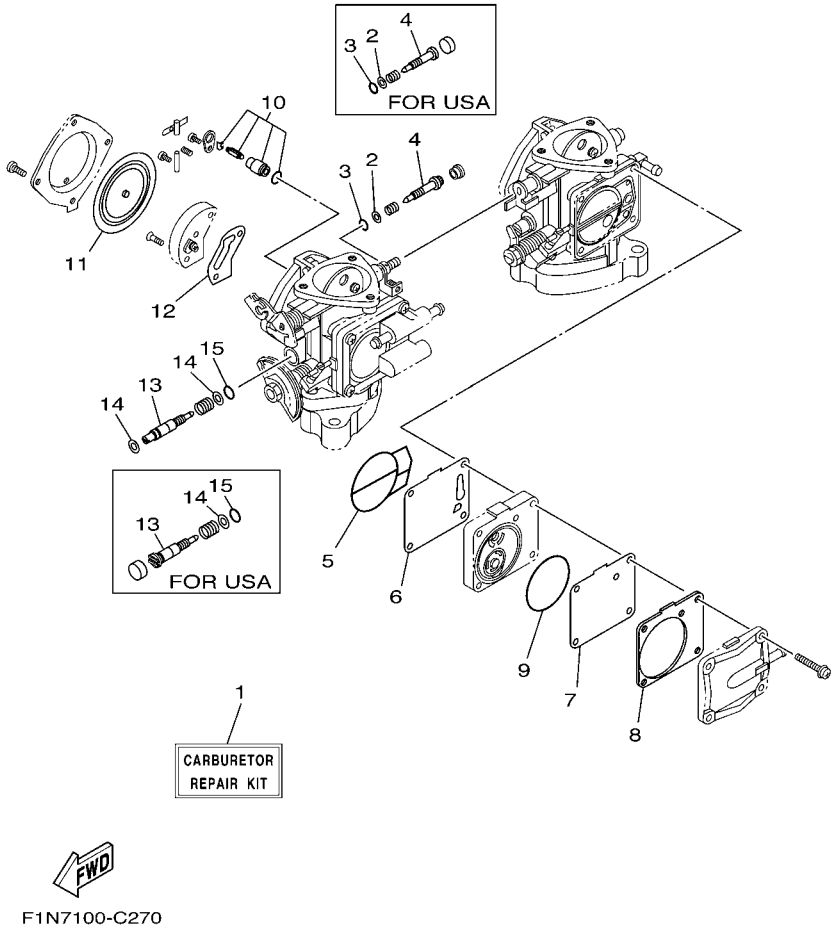

FIG. 27 REPAIR KIT 2

REF. NO.	PART NO.	DESCRIPTION	USA	GENE	JPN			REMARKS
1	64U–W0093–10	CARBURETOR REPAIR KIT	1					FOR USA
	64U–W0093–02	CARBURETOR REPAIR KIT		1	1			FOR GENE,JPN
2	812–14235–00	.WASHER, NEEDLE	4	4	4			
3	812–14147–00	.O-RING	2	2	2			
4	64U–14946–00	.PLATE, NEEDLE FITTING	2					FOR USA
	63M–14946–00	.PLATE, NEEDLE FITTING		2	2			FOR GENE,JPN
5	6K8–14564–00	.O-RING	2	2	2			
6	6K8–24411–20	.DIAPHRAGM	1	1	1			
7	6K8–24421–10	.VALVE, CHECK	1	1	1			
8	6K8–24431–20	.GASKET, FUEL PUMP 1	1	1	1			
9	6K8–14563–00	.O-RING	1	1	1			
10	61X–14916–16	.NEEDLE	2	2	2			
11	6R7–14541–00	.DIAPHRAGM, PUMP	2	2	2			
12	6K8–14536–11	.GASKET	2	2	2			
13	64U–14923–10	.SCREW, PILOT	2					FOR USA
	64U–14923–00	.SCREW, PILOT		2	2			FOR GENE,JPN
14	822–14235–00	.WASHER, NEEDLE	2					FOR USA
	822–14235–00	.WASHER, NEEDLE		4	4			FOR GENE,JPN
15	583–14561–00	.O-RING	2	2	2			

PART NO.	GRID NO.
64U–11111–00–8S	B – 2
62T–11181–00	B – 2
	D – 14
61X–11311–01–8S	B – 2
6E5–11325–00	B – 2
6M6–11351–A2	B – 2
	D – 14
61X–11400–03	B – 4
6M6–11412–00	B – 4
6M6–11422–00	B – 4
6M6–11431–00	B – 4
6M6–11442–01	B – 4
82M–11515–00	B – 4
61X–11603–01	B – 4
61X–11604–01	B – 4
61X–11605–01	B – 4
61X–11631–02–93	B – 4
61X–11633–00	B – 4
61X–11635–02	B – 4
61X–11636–02	B – 4
62T–11651–00	B – 4
82M–11685–00	B – 4
63M–12580–00	B – 12
64X–12581–00	B – 13
67X–12590–10	B – 14
67X–12590–20	B – 14
6R8–13116–A0	D – 14
62T–13555–00–94	B – 6
62T–13556–00	B – 6
	D – 14
62T–13566–00	B – 6
	D – 14
62T–13610–00	B – 6
62T–13624–00	B – 6
	D – 14
62T–13674–00	B – 7
	D – 14
47X–14133–00	B – 8
	B – 10
812–14147–00	B – 8
	B – 10
	D – 15
439–14186–00	B – 9
	B – 11
830–14231–14	B – 8
	B – 10
3G2–14231–26	B – 8
	B – 10

PART NO.	GRID NO.
812–14235–00	B – 8
	B – 10
	D – 15
822–14235–00	B – 9
	B – 11
	D – 15
62T–14243–01	B – 6
62T–14251–10	B – 2
6R7–14253–00	B – 9
	B – 11
62T–14255–00	B – 7
62T–14283–00	B – 7
62T–14284–10–8S	B – 6
64U–14301–03	B – 10
64U–14301–10	B – 8
64U–14302–03	B – 10
64U–14302–10	B – 8
64U–1432A–00	B – 8
64U–1432A–10	B – 9
62T–14419–00	B – 7
62T–14435–00	B – 7
62T–14451–00	B – 7
6K8–14471–10	B – 10
6R7–14485–00	B – 2
	B – 13
6M6–14503–00	B – 8
	B – 10
6K8–14503–02	B – 8
	B – 10
6K8–14521–01	B – 9
	B – 11
6M6–14521–01	B – 8
	B – 10
6K8–14521–10	B – 8
	B – 10
6K8–14523–11	B – 9
	B – 11
62T–14527–02	B – 6
6K8–14527–11	B – 8
	B – 10
6K8–14536–11	B – 9
	B – 11
	D – 15
6R7–14541–00	B – 9
	B – 11
	D – 15
6R7–14542–00	B – 9
	B – 11

PART NO.	GRID NO.
6K8–14547–01	B – 9
	B – 11
583–14561–00	B – 9
	B – 11
	D – 15
6K8–14563–00	B – 8
	B – 10
	D – 15
6K8–14564–00	B – 8
	B – 10
	D – 15
6R7–14569–00	B – 9
	B – 11
6K8–14589–00	B – 9
	B – 11
61X–14613–A0	B – 12
	D – 14
61L–14615–A0	B – 13
61L–14625–A0	B – 13
61X–14711–01–94	B – 12
61L–14712–00–94	B – 12
6M6–14718–01–8S	B – 12
6R7–14721–00–8S	B – 13
6M6–14739–A1	B – 12
	D – 14
6R7–14749–A0	B – 12
	D – 14
64V–14752–00	B – 13
6R7–14753–00–9M	B – 13
6R7–14755–A0	B – 13
	D – 14
6M6–14771–00–94	B – 13
6R7–14785–00–8S	B – 13
61X–14916–16	B – 9
	B – 11
	D – 15
64U–14923–00	B – 11
	D – 15
64U–14923–10	B – 9
	D – 15
3KW–14932–00	B – 8
	B – 10
63M–14946–00	B – 10
	D – 15
64U–14946–00	B – 8
	D – 15
62T–15100–00–8S	B – 2
6R7–15761–00	B – 13

PART NO.	GRID NO.
6R7–21415–01–94	B – 2
6R7–21425–01–94	B – 2
EU0–23814–01	D – 6
62T–24313–01	B – 6
62T–24314–01	B – 6
6E5–24378–00	B – 12
6K8–24411–20	B – 8
	B – 10
	D – 15
6R7–24412–01	B – 11
6R7–24412–02	B – 9
6M6–24413–01	B – 10
6M6–24413–02	B – 8
65U–24421–00	B – 8
	B – 10
6K8–24421–10	B – 8
	B – 10
	D – 15
6K8–24431–20	B – 8
	B – 10
	D – 15
6K8–24452–10	B – 8
	B – 10
70R–24489–00	D – 2
65U–24492–00	B – 8
	B – 10
6K8–24500–02	B – 15
6R7–24524–00	B – 15
70R–24543–00	D – 2
6K8–24560–10	B – 15
6R7–41113–00–8S	B – 13
6R7–41114–A0	B – 13
	D – 14
6R7–42316–00	C – 3
6R7–44517–00–8S	B – 2
663–45119–00	B – 6
62T–45127–00	B – 5
	D – 14
61X–45332–03–94	C – 5
61L–45378–00	C – 5
6R7–45511–01	C – 3
62T–45526–00	B – 4
6M6–45813–22–8P	B – 5
6M6–45813–32–8P	B – 5
61X–4581J–00	B – 5
6R7–51117–01	C – 4
	D – 14
6K8–51129–00	B – 2

PART NO.	GRID NO.
6K8–51129–00	B – 12
	C – 3
6K8–51162–00	C – 14
6R7–51311–00	C – 4
6R7–51312–03–94	C – 3
61L–51313–00	C – 3
62T–51315–01–94	C – 3
6R7–51318–05–94	C – 3
6R7–51321–00–8S	C – 3
6R7–51323–02	C – 5
62T–51326–00	C – 3
6R7–51333–00	C – 4
62T–51348–00	C – 3
61X–51381–00	C – 5
61L–5169A–00	B – 6
FX1–61105–00	D – 8
EW2–61314–00	D – 7
FX1–61337–00	D – 8
FX1–61338–00	D – 8
GM6–6133B–00	D – 8
FX1–6133C–12	D – 8
EW2–61344–01	D – 8
FX1–6134L–00	D – 8
FX1–61391–00	D – 9
EW2–61395–30	D – 8
EW2–61417–00	D – 7
EW2–61419–00	D – 7
GM6–6142A–30	D – 8
EU0–61435–00	D – 5
EU0–61436–00	D – 5
EU0–61438–00	D – 5
FX1–6143D–20	D – 6
FX1–6143E–20	D – 6
EU0–61446–00	D – 5
EU0–61461–02	D – 6
EU0–61461–30	D – 5
EW2–61465–00	D – 8
FX1–61468–00	D – 8
GM6–61481–00	D – 5
EU0–61486–00	D – 5
EW2–61540–11	D – 6
FX1–61552–00	D – 6
EW2–61553–00	D – 6
FN8–61651–01	C – 15
EU0–61652–00	B – 14
	C – 15
GP7–61652–00	D – 4
EW2–62137–00	C – 12

PART NO.	GRID NO.
GM6–6213F–00	C – 12
EW2–62140–00	D – 2
EW2–62142–00	D – 2
EW2–62149–00	C – 11
EW2–62150–00	D – 2
GM6–6215G–00	D – 8
GM6–62501–10	C – 15
GM6–6251D–10	C – 15
GM6–6251E–10	C – 15
GM6–6252C–10	C – 15
GM6–6252D–10	C – 15
GM6–62552–10	C – 15
GM6–62553–10	C – 15
GM6–62664–00	C – 12
EU0–62693–02	C – 4
EU0–62694–00	D – 5
EU0–62695–00	C – 4
EW2–62723–30	C – 4
F1N–6273B–00	C – 4
EW2–62840–10	C – 13
EW2–62843–00	C – 13
EW2–62845–10	C – 13
EW2–62846–00	C – 13
EW2–62847–00	C – 13
EW2–62848–00	C – 13
A00–62858–02	C – 12
GM6–6351B–00	C – 15
GM6–6351C–00	C – 15
GM6–6351D–00	C – 15
GM6–6351E–10	C – 15
GM6–63844–00	D – 4
F1N–64114–00	D – 10
GK5–6411B–00	D – 11
GM6–6411H–00	D – 10
F1N–6415B–00	D – 11
F1N–6415B–10	D – 12
F1N–6415B–20	D – 13
GA7–6416H–20	D – 12
F1N–6417B–10	D – 10
F1N–6417C–30	D – 10
F1N–6417C–40	D – 10
F1N–6417D–30	D – 10
F1N–6417D–40	D – 10
F1N–6417E–30	D – 10
F1N–6417E–40	D – 10
F1N–6417F–30	D – 10
F1N–6417F–40	D – 10
F1N–6417G–30	D – 10

PART NO.	GRID NO.
F1N–6417G–40	D – 10
EU0–64188–00	D – 11
	D – 12
	D – 13
GM6–6418D–00	D – 2
EW3–64197–00	D – 13
GM6–641B1–01	D – 11
GM6–641B1–10	D – 11
	D – 12
GM6–641B1–21	D – 12
GM6–641B1–41	D – 12
GM6–641B1–50	D – 12
GM6–641B1–60	D – 13
GM6–641B1–70	D – 13
GM6–641B2–00	D – 11
	D – 12
GM6–641B2–10	D – 11
	D – 12
GM6–641B2–40	D – 12
GM6–641B2–50	D – 12
GM6–641B2–60	D – 13
GM6–641B2–70	D – 13
F1N–641DB–00	D – 11
F1N–641DB–10	D – 12
F1N–641DB–20	D – 13
GM6–6491A–02–P2	D – 8
FX1–6492E–10	D – 8
GM6–6492J–30	D – 9
GM6–64949–00	D – 9
FX1–65116–10	C – 12
GM6–65135–00	D – 8
GM6–65136–00	C – 12
EW2–65137–00	C – 12
FX1–6514B–00	C – 12
FX1–6514F–00	C – 12
GM6–6516A–10–33	C – 12
GM6–6516C–00	C – 12
FX1–6517D–00	C – 12
GM6–6521C–10	C – 15
GM6–6521D–10	C – 15
FX1–65760–00	D – 4
EW2–65772–00	D – 3
	D – 4
EU0–65901–01	D – 10
EW2–65912–00	C – 12
EW2–65913–00	C – 12
FX1–6591A–10	C – 12
FX1–6591K–00	C – 12

PART NO.	GRID NO.
F1N–65938–00	B – 15
EU0–65986–00	D – 10
EU0–65986–10	D – 10
GM6–65987–00	D – 10
GM6–67242–00	D – 5
GD0–67249–00–05	C – 5
GD0–67249–00–10	C – 5
EW2–67250–02	D – 6
GM6–67252–00	D – 5
EW2–67255–00	D – 6
EW2–67256–00	D – 6
EW2–67257–01	D – 6
EW2–67258–01	D – 6
EW2–67259–01	D – 6
EU0–67324–00	B – 3
EU0–67354–00–01	B – 3
EW2–67354–00–01	C – 4
EU0–67354–00–03	B – 3
EW2–67354–00–03	C – 4
EU0–67354–00–05	B – 3
EW2–67354–00–05	C – 4
EU0–67354–00–10	B – 3
EW2–67354–00–10	C – 4
EU0–67354–00–20	B – 3
GH7–6753B–00	D – 4
GM6–67550–00	D – 4
GM6–67555–00	D – 4
GM6–6755J–00	D – 4
GM6–67565–00	D – 4
GM6–67593–00	D – 3
GM6–67594–00	D – 3
EU0–67613–00	C – 14
EW2–67618–00	C – 14
EW2–67711–01	D – 2
FJ0–67713–00	D – 2
EW2–67714–02	D – 2
EW2–67716–01	D – 2
GM6–6773E–00	B – 15
EU0–67767–31	D – 2
EU0–67816–30	B – 15
EU0–67817–00	C – 2
EW2–67821–00	D – 2
EW2–67821–30	D – 3
EW2–67822–01	D – 3
FN8–67831–01	D – 3
EU0–67832–00	D – 3
FN8–67833–00	D – 3
EU0–67834–00	D – 3

PART NO.	GRID NO.
EU0–67835–00	D – 3
EU0–67839–00	D – 3
GM6–67844–10	D – 3
EU0–67856–40	C – 11
EU0–67869–00	D – 3
EW2–68156–00	C – 8
EW2–68211–00	C – 11
EU0–68218–04	C – 11
	D – 4
EU0–68221–00	C – 11
EW2–68221–00	C – 11
EU0–68221–30	C – 11
EW2–68310–04	D – 6
FK7–68312–02	D – 6
FK7–68313–02	D – 6
EW2–68348–00	D – 6
6M6–8132W–00	C – 8
6M6–81337–00–8S	C – 6
6M6–81365–A0	C – 6
	D – 14
6M6–81800–10	C – 7
3AJ–81809–00	C – 7
6M6–81820–00	C – 7
6M6–81826–00	C – 7
6M6–81830–00	C – 7
6M6–8183E–01	C – 7
6M6–81840–10	C – 7
11H–81844–00	C – 7
6M6–81844–00	C – 8
26H–81847–00	C – 7
6M6–81850–00	C – 7
6M6–81865–00	C – 7
6M6–81866–00	C – 7
6M6–81921–00	C – 8
68N–81940–00	C – 8
6M6–81960–A0	C – 8
EU0–82110–09	C – 11
64V–82117–00	C – 11
6R7–82117–11	C – 11
62E–82117–20	C – 9
6K8–82150–01	C – 8
6G1–82151–00	C – 8
6K8–82159–00	C – 8
6R7–82351–00	C – 9
62E–82351–01	C – 9
6R7–82352–00	C – 9
62E–82352–01	C – 9
6R7–82361–01	C – 9

PART NO.	GRID NO.
66T–82370–00	C – 9
62E–82371–11	C – 8
6R7–82553–01	C – 9
6R7–82560–10	C – 9
63N–83623–00	C – 8
6R7–83623–40	C – 8
6R7–83623–50	C – 10
60E–83627–00	C – 9
682–84385–01	B – 13
62T–85515–00	C – 6
62T–85520–00	C – 6
6M6–8552A–01–8P	C – 8
6M6–8552E–01	C – 8
62T–85533–00	C – 6
62T–85540–01	C – 8
62T–85550–00	C – 6
62T–85560–00	C – 6
62E–85570–00	C – 8
62E–85570–11	C – 8
6M6–85580–00	C – 6
64U–W0001–00	D – 14
61X–W0001–22	D – 14
62T–W0004–00	B – 6
64V–W0090–02–8S	B – 2
64U–W0093–02	D – 15
64U–W0093–10	D – 15
90105–06900	D – 3
	D – 4
90105–08902	D – 6
90105–10M49	B – 13
90105–10M88	B – 13
90109–10M44	C – 6
90116–08M60	B – 6
90119–05923	C – 13
90119–05M02	B – 7
90119–06900	C – 12
	D – 8
90119–06908	C – 4
	C – 8
90119–06913	D – 8
90119–06915	C – 4
90119–06918	D – 8
90119–06920	C – 11
90119–06M70	C – 3
90119–06MA1	B – 13
90119–08038	B – 3
90119–08904	B – 3
90119–08907	C – 5

PART NO.	GRID NO.
90119–08943	C – 4
90119–08M55	B – 2
90119–08M96	B – 2
90119–10948	C – 4
90119–10M00	B – 2
90119–10M01	B – 2
90119–10M02	B – 2
90119–10M03	B – 2
90119–10M07	B – 2
90119–10M17	B – 13
90119–10M56	B – 2
90149–05937	D – 6
90149–05959	D – 6
90149–05960	C – 15
90149–05962	C – 15
90149–06997	D – 8
90159–05900	D – 6
90170–14913	D – 9
90170–22187	C – 2
90176–10915	D – 7
90179–05964	C – 15
90179–08962	C – 4
90179–08M15	B – 6
90179–10925	C – 4
90179–12933	D – 7
90201–05928	D – 6
90201–06M02	C – 3
90201–11008	D – 5
90201–20M04	B – 4
90201–24M02	B – 5
90209–12920	D – 5
90267–40935	D – 3
90267–40945	D – 5
90267–48925	B – 15
	D – 2
90267–48930	D – 4
90267–48932	C – 15
90267–48938	C – 12
90267–48940	B – 15
90267–48963	C – 15
90280–05013	C – 6
90340–08M04	B – 12
90380–12M29	B – 2
	C – 6
90387–06916	D – 9
90387–06M05	C – 6
90387–06M60	C – 5
90387–08M06	C – 3

PART NO.	GRID NO.
90430–08020	B – 12
	D – 14
90445–07M19	B – 2
90445–09M17	C – 5
90445–10M98	B – 15
90445–10ME3	B – 15
90445–10ME4	B – 15
90445–10ME8	B – 15
90445–10MF1	B – 15
90445–11903	D – 2
90445–14M04	C – 14
90445–14M05	B – 13
90445–14M06	B – 12
90445–14M12	C – 3
90445–14M14	B – 12
90445–14M19	C – 14
90445–14M29	B – 12
90445–14M33	B – 12
90446–14M23	B – 15
90446–14M30	D – 2
90446–14M64	B – 15
90450–14M05	B – 12
	C – 3
90450–18M09	B – 13
90460–64M15	B – 13
90460–70M16	B – 13
90460–90M11	B – 13
90464–06M29	C – 8
90464–08M07	B – 15
90464–20258	C – 12
90465–06M86	C – 8
90465–11M10	B – 6
	B – 12
	B – 15
	C – 5
	C – 9
	C – 11
	C – 14
	D – 2
	D – 4
90465–12M53	C – 6
90465–12M56	B – 15
90465–13M11	C – 9
	C – 14
	D – 2
	D – 7
90467–06016	B – 2
90467–08M10	C – 11

PART NO.	GRID NO.
90467–11032	D – 2
90480–06M43	C – 9
90480–06M69	C – 5
90501–14M73	C – 7
90560–22281	D – 6
90600–91728	D – 6
90600–91736	B – 15
90601–11062	D – 2
90601–15573	D – 3
90601–16274	D – 2
90601–16875	C – 12
	D – 4
90601–20006	B – 15
	D – 8
90601–20016	B – 15
90601–20024	B – 14
90699–50003	D – 2
90699–50045	D – 2
90699–50120	D – 2
91490–16010	D – 2
91790–05040	D – 2
92580–06016	C – 12
92903–06600	B – 6
	B – 12
	C – 7
92903–08600	B – 12
	C – 7
92990–05100	C – 15
	D – 8
92990–05200	C – 4
	C – 15
92990–05600	B – 6
	D – 2
92990–06100	C – 7
	C – 12
	C – 15
	D – 6
92990–06200	C – 12
	C – 15
	D – 8
92990–06600	C – 6
	C – 9
92990–08100	C – 8
	D – 8
92990–08200	C – 8
92990–10100	D – 7
92990–10200	D – 7
92990–14200	D – 4

PART NO.	GRID NO.
92990–14200	D – 9
92995–06100	C – 8
92995–06600	B – 13
	C – 3
	C – 6
	C – 8
92995–08600	C – 3
93101–25M50	C – 3
	D – 14
93101–25M55	C – 5
	D – 14
93101–25M56	C – 5
	D – 14
93101–36M46	B – 4
	D – 14
93102–25M34	C – 3
	D – 14
93102–36M33	B – 4
	D – 14
93103–32M01	B – 4
	D – 14
93210–13M63	B – 7
93210–17MA4	C – 5
	D – 14
93210–46M16	C – 3
	D – 14
93305–30601	B – 4
93306–205U0	C – 3
93306–205U6	C – 5
93306–207U2	B – 4
93306–307U3	B – 4
93310–320U2	B – 4
93310–525U0	B – 4
93430–47M04	C – 5
93440–25M08	C – 7
93440–80023	B – 4
93450–18M06	C – 7
93450–21053	B – 4
93603–10049	B – 5
93604–07141	B – 5
93606–07M17	C – 4
93606–12019	B – 2
	C – 3
	C – 5
	C – 6
94702–00040	C – 9
94702–00272	C – 9
94709–00040	C – 9

PART NO.	GRID NO.
95380–06700	C – 3
	C – 7
95380–06800	C – 15
95380–08600	C – 8
95680–08630	D – 8
95720–05300	C – 4
	C – 13
95720–06300	C – 12
	D – 8
95720–08300	D – 8
97013–06012	B – 7
97013–06016	B – 6
97013–06020	B – 6
	B – 13
97013–06025	B – 6
	B – 12
97013–06035	B – 6
97013–08025	B – 12
97013–08035	B – 12
	C – 7
97013–08090	B – 12
97090–06014	C – 12
97095–06010	C – 8
97095–06016	B – 13
	C – 9
97095–06020	C – 3
97095–06025	C – 6
97095–06035	C – 6
97095–08018	C – 3
97513–08540	C – 7
97595–06525	C – 5
97780–50114	C – 14
	D – 3
97780–50316	C – 12
97780–60120	C – 4
97780–60520	D – 9
97780–60525	C – 8
97802–04008	C – 6
97880–03008	D – 6
97880–05012	B – 9
	B – 11
	D – 8
97880–05016	B – 6
97880–05025	D – 6
97880–06016	C – 6
	C – 9
97880–06030	C – 9
97902–04122	C – 6

PART NO.	GRID NO.
97902–05125	C – 6
97980–05330	B – 8
	B – 10
98580–05018	B – 8
	B – 10
98780–04015	B – 2
98780–05016	C – 4
98980–04008	C – 2
98980–04010	D – 7

PART NO.	GRID NO.

PART NO.	GRID NO.