YAMAHA

PARTS CATALOGUE

WaveRunner XLT1200

XA1200A-D (F0VC/68NJ/68N1)

XA1200A-D (F0VD/69EE/68N1)

MJ-XA1200 ’05 (F0VE/68NK/68N1)

1DF0V-100E1

(2DF0V-100E1)

YAMAHA GENUINE Parts & Accessories

2009/2/27

NEWS NO.	DATE	COMMENT
PE0-WV-090003	Feb.,18,2009	IMPORTANT LABELS LIST CORRECTION
PE0-WV-090004	Feb.,18,2009	IMPORTANT LABELS LIST CORRECTION
PE0-WV-090006	Feb.,18,2009	IMPORTANT LABELS LIST CORRECTION

XA1200A-D/MJ-XA1200 '05
PARTS CATALOGUE
©2004 by Yamaha Motor Co., Ltd.
1st edition, July 2004
All rights reserved.
Any reprinting or unauthorized use
without the written permission of
Yamaha Motor Co., Ltd.
is expressly prohibited.
Printed in Japan.

A3

FOREWORD

This Parts Catalogue is related to the parts for the model(s) on the cover page. When you are ordering replacement parts, please refer to this Parts Catalogue and quote both part numbers and part names correctly.

1. Modifications or additions which have been made after the issue of the Parts Catalogue will be announced in the Parts News.
   It is advisable that you make the necessary corrections to the Parts Catalogue according to the Parts News.

2. Abbreviations
   The following abbreviations are used in this Parts Catalogue.

   "UR" Use specified parts number.
   "UN" Use as many as needed.
   "AP" Alternate Parts
   "LM" Locally Made (Parts need to be ordered locally)
   "F#" Frame No. (Applicable machine No.)
   "O/S" Over Size

3. The number of components for assembly
   - Parts, which are to be supplied in an assembly, are listed with a dot (.) in front of the part name as shown below.
   - The numeral appearing to the right of each component part indicates the quantity of parts for each assembly unit.

PART NO.	DESCRIPTION	Q'TY	REMARKS
2F5–83310–60	FRONT FLASHER LIGHT ASSY	2	
115–83311–60	.BULB (6V–18W)	1	

4. Applicable colours of graphics are represented in the "REMARKS" as shown below.

PART NO.	DESCRIPTION	Q'TY	REMARKS
2N4–24110–00–X5	FUEL TANK COMP.	2	MXR
3J1–24240–10	.GRAPHIC, FUEL TANK	1	FOR MXR

5. Note that the illustrations for reference in finding parts numbers are not to be used for assembling. When assembling, please use the applicable service manual.

6. The asterisk (*) before a reference number indicates modified items after the first edition.

7. A part with "YMUS" in the remarks column can be obtained from YMUS (USA) and not from YAMAHA MOTOR CO.,LTD (JAPAN).

PART NO.	DESCRIPTION	Q'TY	REMARKS
EW2–U5160–00	ENGINE HATCH COMP	2	YMUS
90601–168U7	BAND,HOSE	1	YMUS

ADDRESS:

YAMAHA MOTOR CORPORATION U.S.A.
PARTS & ACCESSORY DIV.
6555 KATELLA AVENUE
CYPRESS, CALIFORNIA 90630 U.S.A.

8. Applicable Serial No.

Engine Serial No.

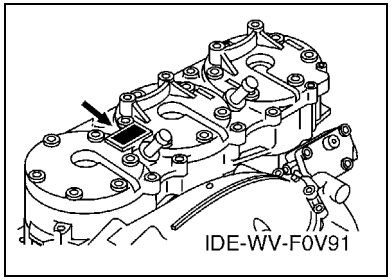

Hull Serial No.

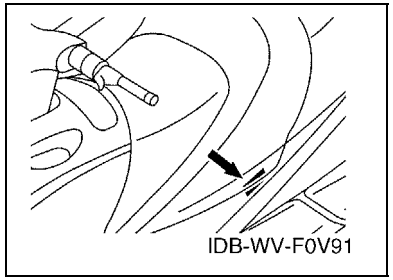

9. Applicable Colour Code (The (*) mark shows Model colour.)

Abbreviation	Colour Name	Colour Code
DPBMP	DARK PURPLISH BLUE METALLIC P	0927
NMC(*)	GRAY METALLIC C	008S
PURW(*)	PURE WHITE	0240
SS4(*)	BLACK SOLID 4	008P
YB	YAMAHA BACK	0033

10. Quantity Column Information

Column No.	Name Of Q'ty Column	Destination
1	U49	U49
2	GENE	EXCEPT U49, JPN
3	JPN	JAPAN

11. Applicable Starting Serial No.

Engine Serial No.

Serial No.	Name Of Q'ty Column	Model Code
68N-1006901	U49	68N1
69E-1001301	GENE	68N1
	JPN	68N1

Serial No.	Name Of Q'ty Column	Model Code
F0V-822013	U49	F0VC
F0V-822413	GENE	F0VD
	JPN	F0VE

CONTENTS

CYLINDER & CRANKCASE 1 ..... B2
CYLINDER & CRANKCASE 2 ..... B4
CRANKSHAFT & PISTON B5
INTAKE B7
CARBURETOR B9
CARBURETOR 2 ..... B13
OIL PUMP C2
EXHAUST 1 ..... C4
EXHAUST 2 ..... C7
FUEL C9
JET UNIT 1 ..... C10
JET UNIT 2 ..... C13
JET UNIT 3 ..... C14
GENERATOR C15
STARTING MOTOR D2
ELECTRICAL 1 ..... D3
ELECTRICAL 2 ..... D6
ENGINE HATCH 1 ..... D7
ENGINE HATCH 2 ..... D8
HULL & DECK D10
GUNWALE & MAT D11
VENTILATION D12
SEAT & UNDER LOCKER D13
OIL TANK D15
FUEL TANK E2
EXHAUST 3 ..... E4
CONTROL CABLE E5
STEERING 1 ..... E8
STEERING 2 ..... E10
GRAPHICS E11
IMPORTANT LABELS E12
IMPORTANT LABELS 2 ..... E13
IMPORTANT LABELS 3 ..... E14
REPAIR KIT 1 ..... E15
REPAIR KIT 2 ..... F3

INDEX

NUMERICAL INDEX M1

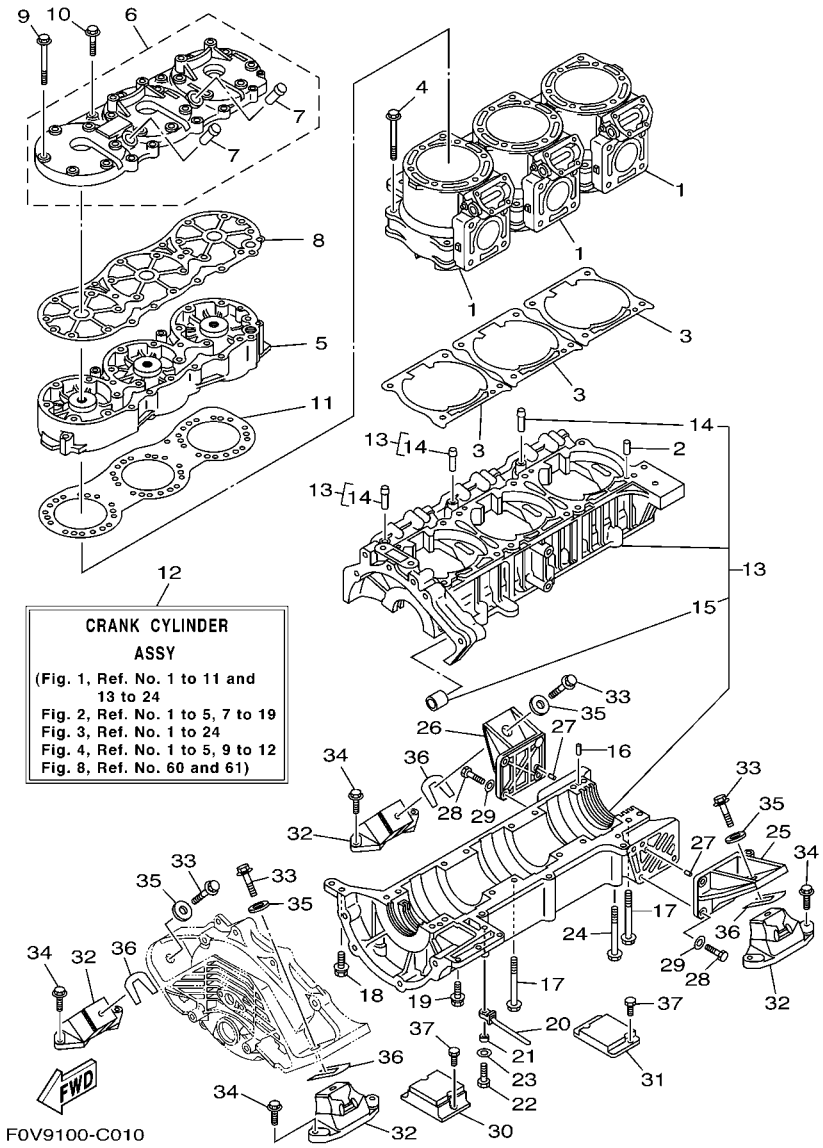

FIG. 1 CYLINDER & CRANKCASE 1

REF. NO.	PART NO.	DESCRIPTION	U49	GENE	JPN			REMARKS
1	66V–11311–00–94	CYLINDER 1	3	3	3			
2	93606–12019	PIN, DOWEL	6	6	6			
3	66E–11351–01	GASKET, CYLINDER	3	3	3			
4	90119–10M07	BOLT, WITH WASHER	12	12	12			
5	67X–11111–00–8S	HEAD, CYLINDER 1	1	1	1			
6	66V–11191–01–8S	COVER, CYLINDER HEAD 1	1	1	1			
7	66E–51129–00	.NIPPLE	2	2	2			
8	66V–11193–00	GASKET, HEAD COVER 1	1	1	1			
9	90119–08M67	BOLT, WITH WASHER	18	18	18			
10	90119–08MA0	BOLT, WITH WASHER	6	6	6			
11	66V–11181–00	GASKET, CYLINDER HEAD 1	1	1	1			
12	68N–W0090–12–8S	CRANK CYLINDER ASSY	1	1	1			
13	68N–15100–00–8S	CRANKCASE ASSY	1	1	1			
14	66V–14251–00	.NIPPLE	3	3	3			
15	90380–12M29	.BUSH, SOLID	1	1	1			
16	93606–12019	PIN, DOWEL	2	2	2			
17	90119–08M63	BOLT, WITH WASHER	16	16	16			
18	90119–08M18	BOLT, WITH WASHER	1	1	1			
19	90119–06M13	BOLT, WITH WASHER	3	3	3			
20	90465–12M53	CLAMP	1	1	1			
21	90387–06M05	COLLAR	1	1	1			
22	97013–06040	BOLT	1	1	1			
23	92903–06600	WASHER, PLATE	1	1	1			
24	90119–06M84	BOLT, WITH WASHER	6	6	6			
25	68N–21425–00–94	BRACKET, REAR UPPER 1	1	1	1			
26	68N–21426–00–94	BRACKET, REAR UPPER 2	1	1	1			
27	93606–12019	PIN, DOWEL	4	4	4			

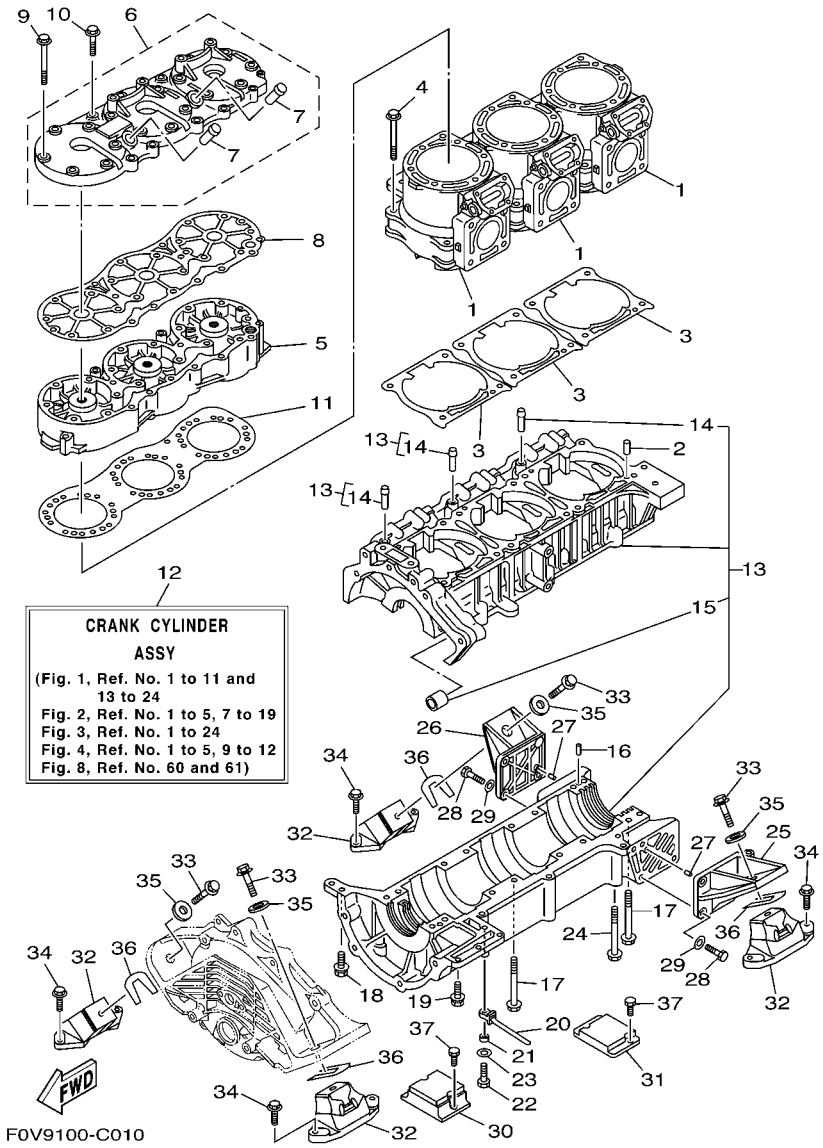

FIG. 1 CYLINDER & CRANKCASE 1

REF. NO.	PART NO.	DESCRIPTION	U49	GENE	JPN			REMARKS
28	97013–08025	BOLT	6	6	6			
29	92903–08600	WASHER, PLATE	6	6	6			
30	66V–44532–00–94	STOPPER, UPPER MOUNT	1	1	1			
31	66V–44574–00–94	STOPPER LWR MOUNT RUBBER	1	1	1			
32	68N–44517–00–94	MOUNT RUBBER	4	4	4			
33	90119–08827	BOLT, WITH WASHER	4	4	4			YMUS
34	90119–08823	BOLT, WITH WASHER	8	8	8			YMUS
35	90201–099U3	WASHER, PLATE	4	4	4			YMUS
36	EU0–U7354–00–01	SHIM (T=0.1)	10	10	10			UR, YMUS
	EU0–U7354–00–03	SHIM (T=0.3)	10	10	10			UR, YMUS
	EU0–U7354–00–05	SHIM (T=0.5)	10	10	10			UR, YMUS
	EU0–U7354–00–10	SHIM (T=1.0)	10	10	10			UR, YMUS
	EU0–U7354–00–20	SHIM (T=2.0)	10	10	10			UR, YMUS
37	90101–06917	BOLT	4	4	4			

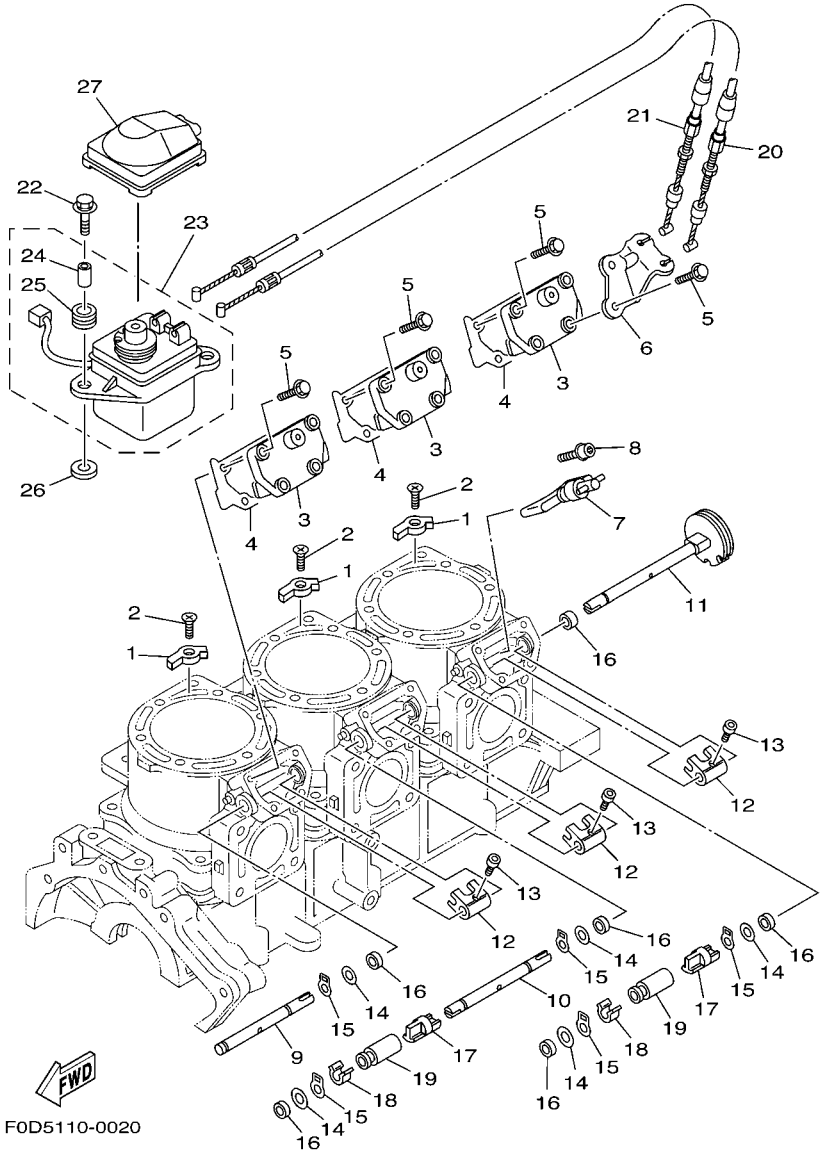

FIG. 2 CYLINDER & CRANKCASE 2

REF. NO.	PART NO.	DESCRIPTION	U49	GENE	JPN			REMARKS
1	66E–11325–00	ANODE	3	3	3			
2	98780–05020	SCREW, FLAT HEAD	3	3	3			
3	66E–1131M–01–94	COVER	3	3	3			
4	66E–1131B–01	GASKET, COVER	3	3	3			
5	97513–06525	BOLT, WITH WASHER	12	12	12			
6	66E–11998–00	BRACKET 1	1	1	1			
7	66E–1131S–10	VALVE ASSY.	3	3	3			
8	90110–05008	BOLT, HEXAGON SOCKET HEAD	3	3	3			
9	66E–1131V–00	SHAFT 1	1	1	1			
10	66V–11333–00	SHAFT 3	1	1	1			
11	66E–1132C–00	PULLEY, SHAFT	1	1	1			
12	60T–11832–00	LEVER, LINK	3	3	3			
13	90110–04M03	BOLT, HEXAGON SOCKET HEAD	3	3	3			
14	90201–08M09	WASHER, PLATE	5	5	5			
15	93410–08M12	CIRCLIP	5	5	5			
16	93109–08M07	OIL SEAL	6	6	6			
17	66E–1131H–00	JOINT 1	2	2	2			
18	66E–1131J–10	JOINT 2	2	2	2			
19	66E–1131C–10	COVER, JOINT	2	2	2			
20	66V–1133E–00	CABLE, PULLEY 1	1	1	1			
21	66V–1133F–00	CABLE, PULLEY 2	1	1	1			
22	90119–069UX	BOLT, WITH WASHER	2	2	2			YMUS
23	66V–85820–10	SERVO MOTOR ASSY	1	1	1			
24	90387–07598	.COLLAR	2	2	2			
25	90480–14023	.GROMMET	2	2	2			
26	90201–06M04	WASHER, PLATE	2	2	2			
27	66E–85825–00	COVER, WIRE	1	1	1			

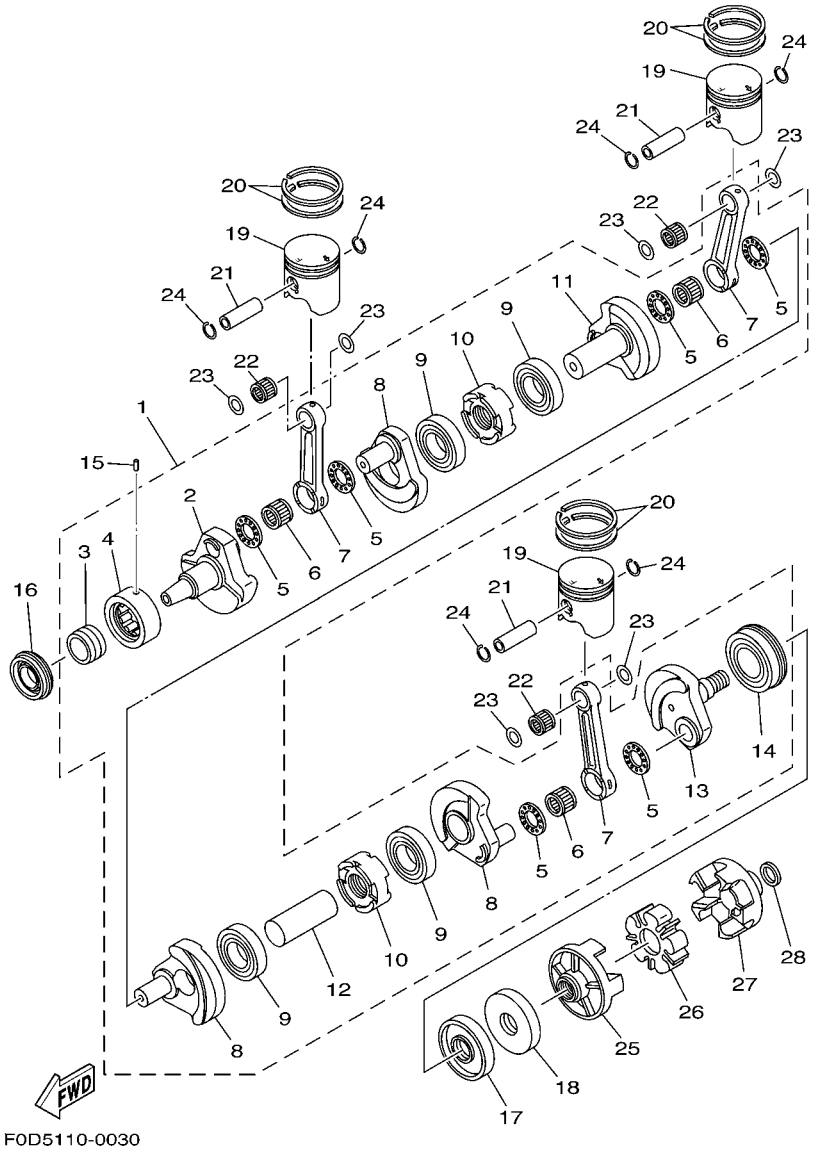

FIG. 3 CRANKSHAFT & PISTON

REF. NO.	PART NO.	DESCRIPTION	U49	GENE	JPN			REMARKS
1	66V–11400–00	CRANKSHAFT ASSY	1	1	1			
2	66E–11412–00	.CRANK 1	1	1	1			
3	90387–35M01	.COLLAR	1	1	1			
4	93390–000U6	.BEARING	1	1	1			
5	66E–11685–00	.WASHER, CRANK PIN	6	6	6			
6	93310–627U6	.BEARING	3	3	3			
7	66E–11651–00	.ROD, CONNECTING	3	3	3			
8	66E–11422–00	.CRANK 2	3	3	3			
9	93306–208U1	.BEARING	4	4	4			
10	66E–11515–00	.SEAL, LABYRINTH 1	2	2	2			
11	66V–11452–00	.CRANK 5	1	1	1			
12	66E–11431–00	.CRANK 3	1	1	1			
13	66E–11442–00	.CRANK 4	1	1	1			
14	93306–308U1	.BEARING	1	1	1			
15	93603–10049	PIN, DOWEL	1	1	1			
16	93103–35011	OIL SEAL	1	1	1			
17	93101–34001	OIL SEAL	1	1	1			
18	93101–34002	OIL SEAL	1	1	1			
19	66V–11631–00–A0	PISTON (STD)	3	3	3			UR RED
	66V–11631–00–B0	PISTON (STD)	3	3	3			UR ORANGE
	66V–11631–00–C0	PISTON (STD)	3	3	3			UR GREEN
	66V–11631–00–D0	PISTON (STD)	3	3	3			UR PURPLE
20	66V–11603–00	PISTON RING SET (STD)	3	3	3			
21	60T–11633–00	PIN, PISTON	2	2	2			
22	93310–422U2	BEARING	3	3	3			
23	90201–22M04	WASHER, PLATE	6	6	6			
24	66E–11634–00	CLIP, PISTON PIN	6	6	6			

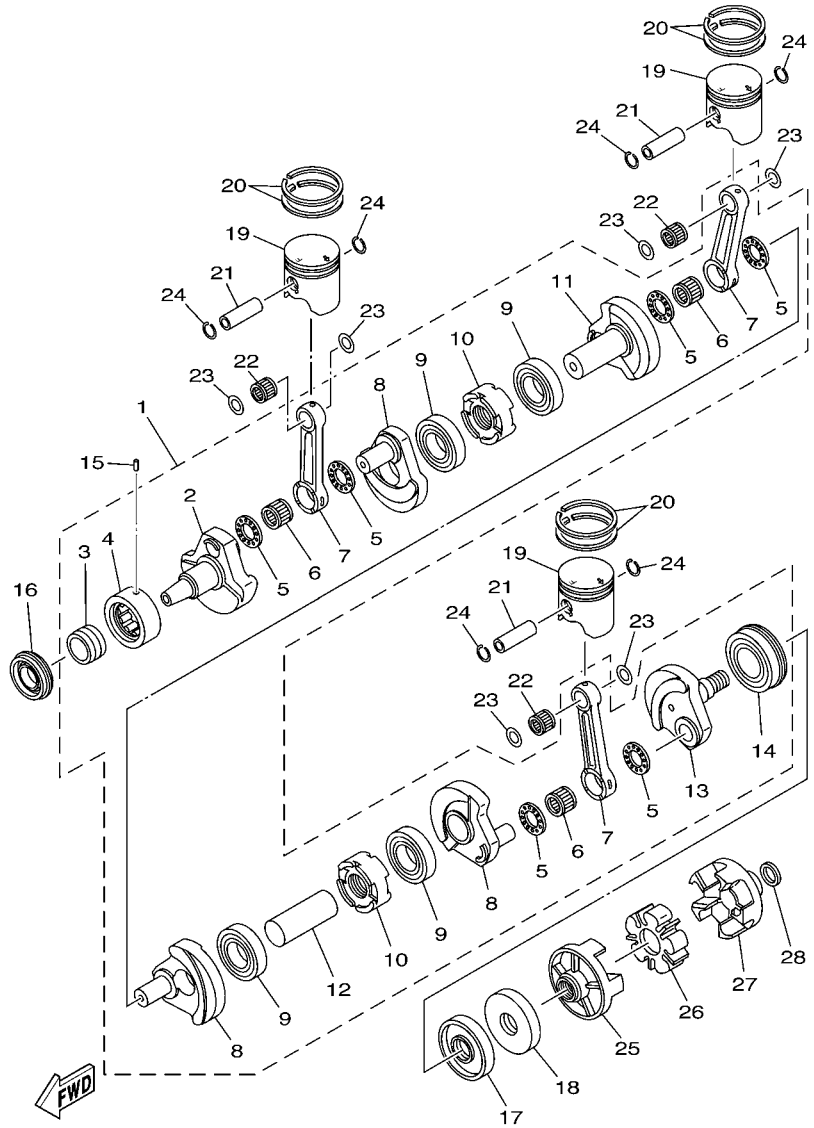

F0D5110-0030

FIG. 3 CRANKSHAFT & PISTON

REF. NO.	PART NO.	DESCRIPTION	U49	GENE	JPN			REMARKS
25	66E–45813–10–94	FLANGE, COUPLING	1	1	1			
26	66E–4581J–00	RUBBER SHAFT COUPLING	1	1	1			
27	68N–45593–00–94	FLANGE, COUPLING 1	1	1	1			
28	90201–248M5	WASHER, PLATE	1	1	1			YMUS

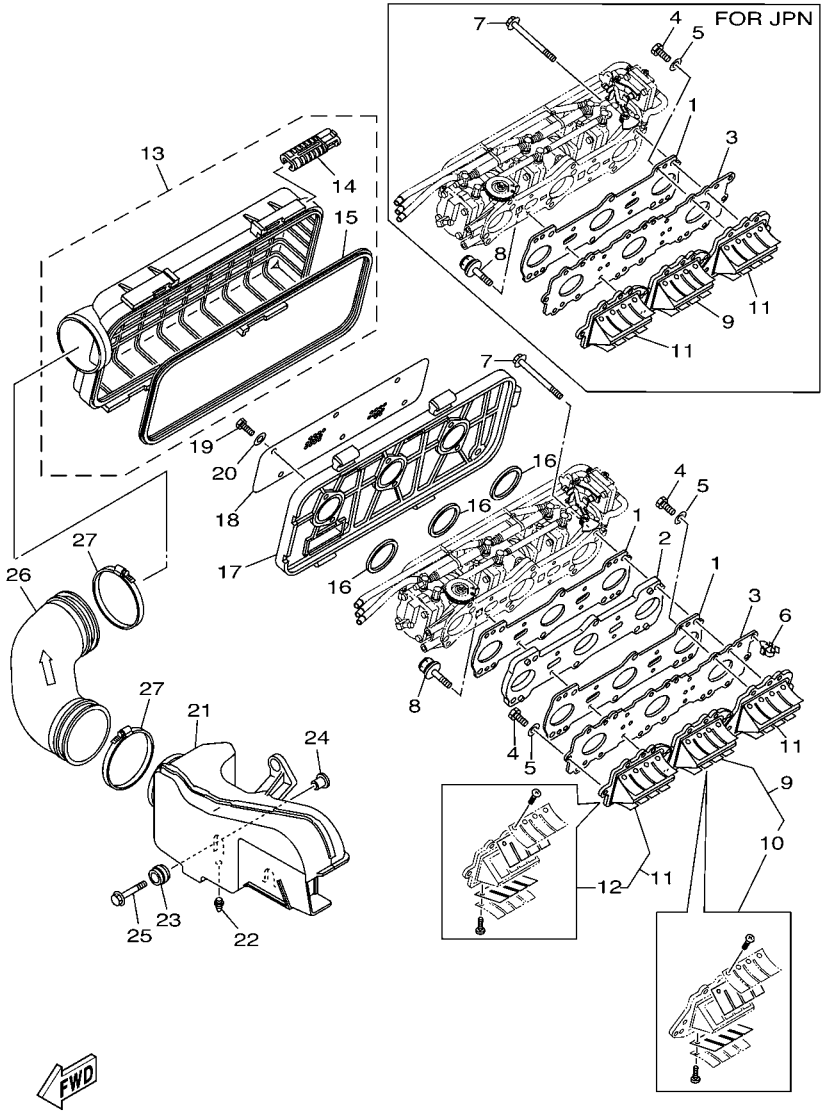

FIG. 4 INTAKE

REF. NO.	PART NO.	DESCRIPTION	U49	GENE	JPN			REMARKS
1	68N–13556–00	GASKET, MANIFOLD	2	2				FOR U49, GENE
	68N–13556–00	GASKET, MANIFOLD			1			FOR JPN
2	68N–14271–00	INSULATOR	1	1				FOR U49, GENE
3	66V–13624–00–94	PLATE,REED VALVE	1	1	1			
4	97013–06025	BOLT	18	18	18			
5	92903–06600	WASHER, PLATE	18	18	18			
6	90464–14M55	CLAMP	1	1	1			
7	90105–08041	BOLT, FLANGE	6	6	6			
8	90110–06068	BOLT, HEXAGON SOCKET HEAD	4	4	4			
9	66V–13610–00	REED VALVE ASSY	1	1	1			
10	66V–W0004–00	.REED SET	1	1	1			
11	66V–13620–00	REED VALVE ASSY	2	2	2			
12	66V–W0004–00	.REED SET	1	1	1			
13	66V–14480–01	COVER SUB ASSY	1	1	1			
14	66V–13898–00	.HOLDER	5	5	5			
15	66V–14457–00	.SEAL	1	1	1			
16	66E–13473–00	O-RING	3	3	3			
17	66V–14284–00	COVER, CARBURETOR 2	1	1	1			
18	66V–14451–00	ELEMENT, AIR CLEANER	1	1	1			
19	97013–06045	BOLT	6	6	6			
20	92903–06600	WASHER, PLATE	6	6	6			
21	66V–14440–00	SILENCER ASSY, INTAKE	1	1	1			
22	66E–42717–00	RUBBER, SEAL 2	1	1	1			
23	90480–22M15	GROMMET	3	3	3			
24	90387–08M37	COLLAR	3	3	3			
25	90119–08M22	BOLT, WITH WASHER	3	3	3			
26	66V–14419–00	PIPE	1	1	1			

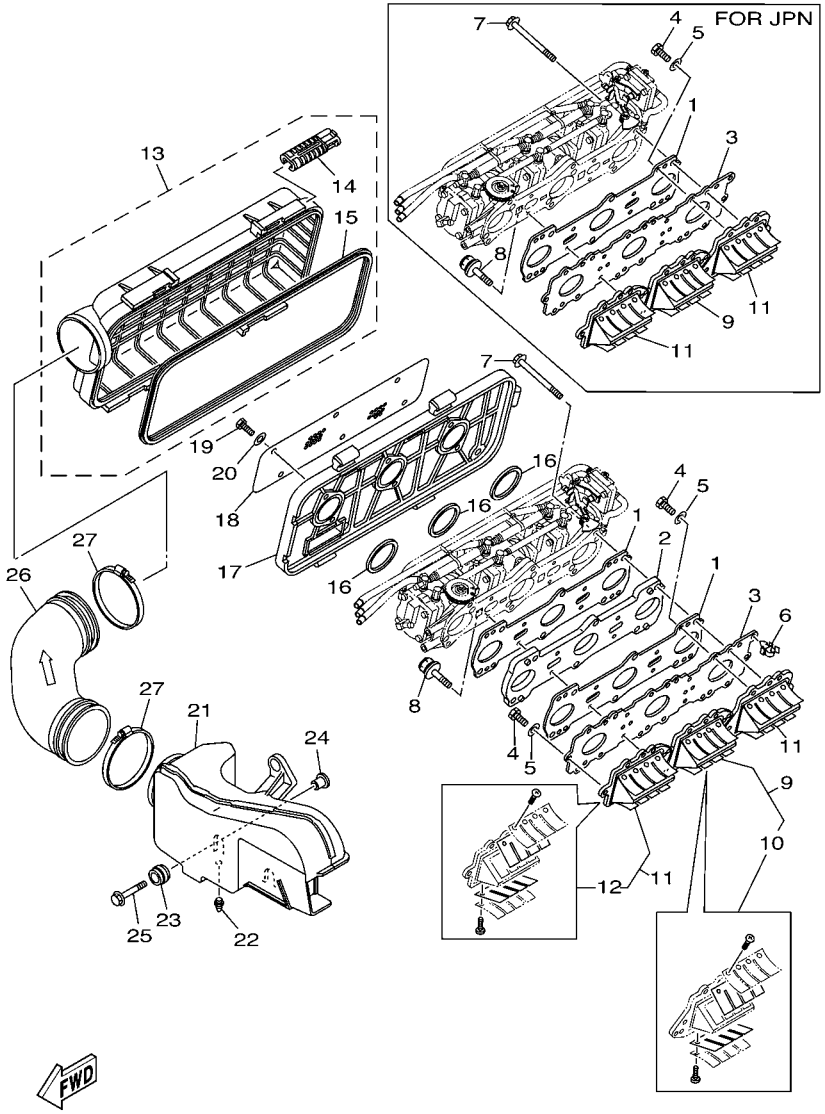

FIG. 4 INTAKE

REF. NO.	PART NO.	DESCRIPTION	U49	GENE	JPN			REMARKS
27	90460–99M23	CLAMP, HOSE	2	2	2			

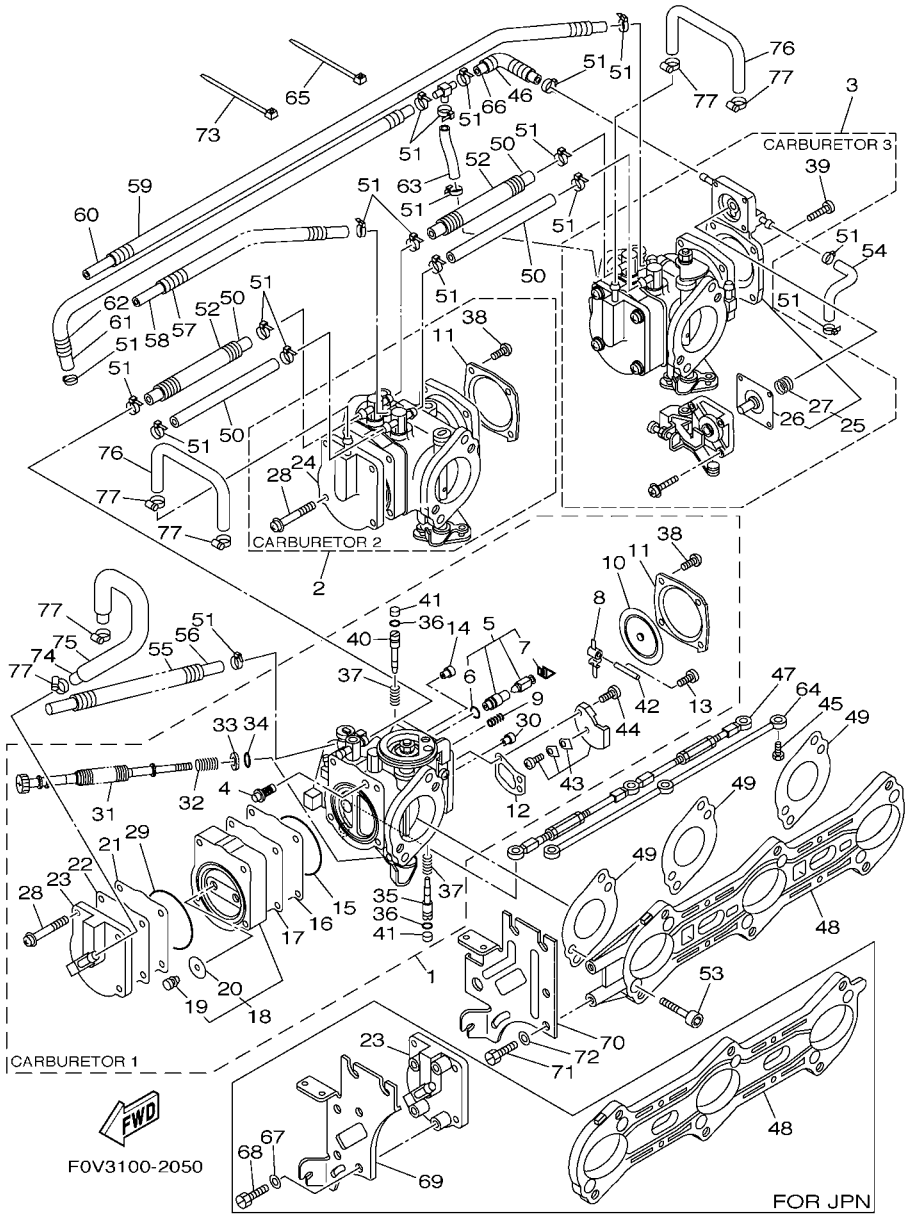

FIG. 5 CARBURETOR

REF. NO.	PART NO.	DESCRIPTION	U49	GENE	JPN			REMARKS
1	68N–14301–02	CARBURETOR ASSY 1	1					FOR U49
	68N–14301–10	CARBURETOR ASSY 1			1			FOR JPN
2	68N–14302–02	CARBURETOR ASSY 2	1					FOR U49
	68N–14302–10	CARBURETOR ASSY 2			1			FOR JPN
3	68N–14303–02	CARBURETOR ASSY 3	1					FOR U49
	68N–14303–10	CARBURETOR ASSY 3			1			FOR JPN
4	6R7–14569–00	.STRAINER	3		3			
5	64T–14916–01	.NEEDLE	3		3			
6	8F2–14147–00	..O-RING	1		1			
7	7EG–14159–00	..CLIP	1		1			
8	6K8–14547–01	.ARM, FLOAT	3		3			
9	6R7–14253–00	.SPRING	3		3			
10	6R7–14541–00	.DIAPHRAGM, PUMP	3		3			
11	6R7–14542–00	.BODY, PUMP 1	2		2			CARBURETOR 1, 2
12	6K8–14536–11	.GASKET	3		3			
13	6K8–14503–02	.SCREW	3		3			
14	3G2–1423A–74	.JET, MAIN (#117.5)	3		3			
15	66E–14563–01	.O-RING	3		3			
16	66E–24471–00	.DIAPHRAGM	3		3			
17	66E–24411–00	.DIAPHRAGM	3		3			
18	66E–24413–01	.BODY 2	3		3			
19	65U–24492–00	..BUSH, FULEL PUMP	2		2			
20	66E–24362–00	..VALVE, CHECK 1	2		2			
21	66E–24421–00	.VALVE, CHECK	3		3			
22	66E–24431–00	.GASKET, FUEL PUMP 1	3		3			
23	66V–24452–00	.COVER	1					CARBURETOR 1
	66V–24452–20	.COVER			1			CARBURETOR 1

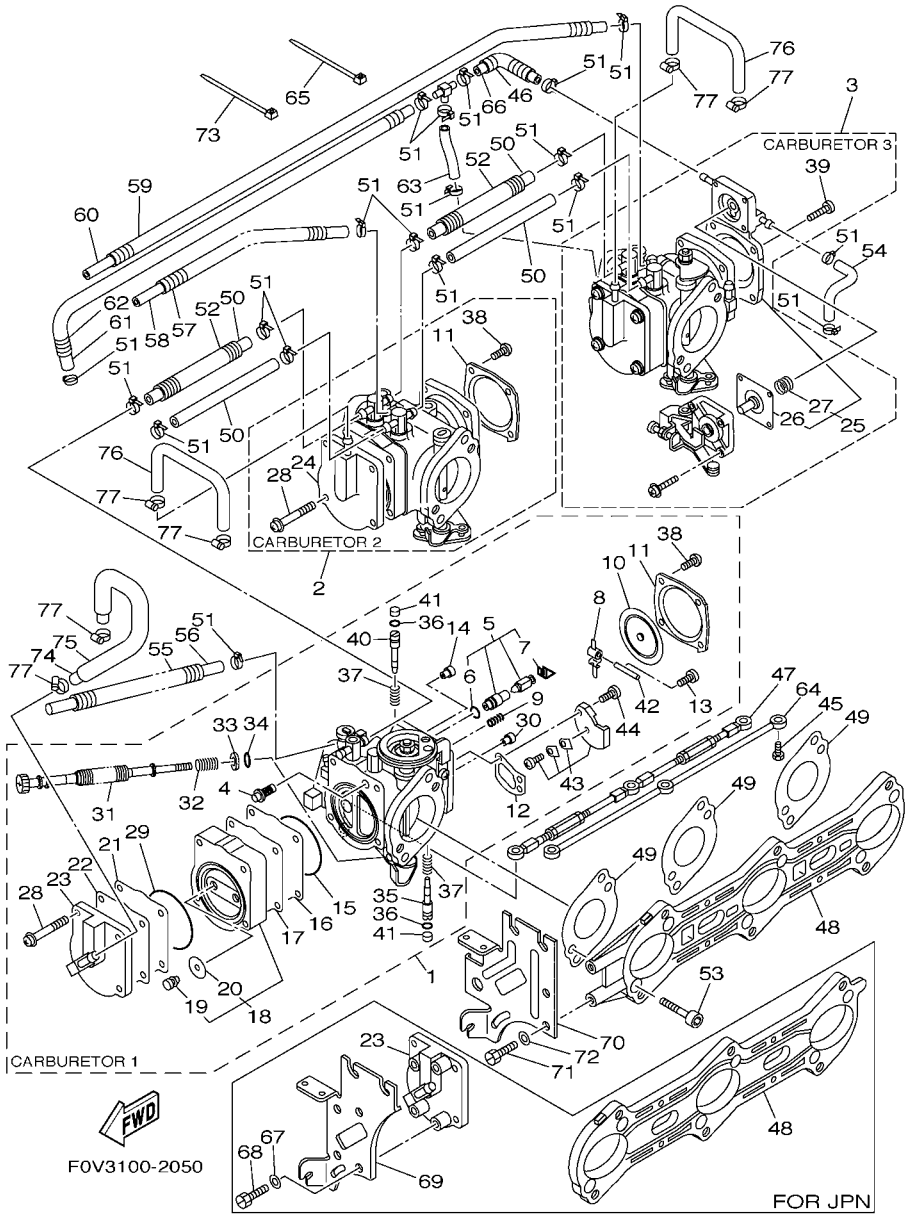

FIG. 5 CARBURETOR

REF. NO.	PART NO.	DESCRIPTION	U49	GENE	JPN			REMARKS
24	66V–24452–10	.COVER	2		2			CARBURETOR 2, 3
25	66E–14280–00	.COVER, CARBURETOR	1		1			CARBURETOR 3
26	66E–14170–00	..DIAPHRAGM ASSY	1		1			CARBURETOR 3
27	66E–14286–00	..SPRING	1		1			CARBURETOR 3
28	90157–05M17	.SCREW, PAN HEAD	12		12			
29	66E–14564–01	.O-RING	3		3			
30	1HX–1423A–68	.JET, MAIN (# 87.5)	3		3			
31	66V–14124–00	.SCREW, CABLE ADJUSTING	1		1			CARBURETOR 1
32	3KW–14932–00	.SPRING, THROTTLE 2	1		1			CARBURETOR 1
33	812–14235–00	.WASHER, NEEDLE	1		1			CARBURETOR 1
34	812–14147–00	.O-RING	1		1			CARBURETOR 1
35	66V–14211–00	.SCREW, PILOT ADJUSTING	3		3			
36	93210–03119	.O-RING	6		6			
37	66V–14160–00	.COIL, SPRING	6		6			
38	97880–05010	.SCREW, PAN HEAD	8		8			CARBURETOR 1, 2
39	98580–05014	.SCREW, PAN HEAD	4		4			CARBURETOR 3
40	66V–14946–00	.PLATE, NEEDLE FITTING	3		3			
41	66V–1432A–00	.PLUG	6		6			
42	439–14186–00	.PIN, FLOAT	3		3			
43	66E–24412–01	.BODY 1	3		3			
44	6K8–14523–11	.SCREW, STOP	6		6			
45	68N–14486–00	SCREW, ROD	3		3			
46	90447–07003	HOSE, WITH SPRING	1		1			
47	66V–41217–00	ROD, ACCEL. LEVER	1		1			
48	66V–14146–00	PLATE	1					FOR U49
	68N–14146–00	PLATE			1			FOR JPN
49	66E–14398–00	GASKET	3		3			

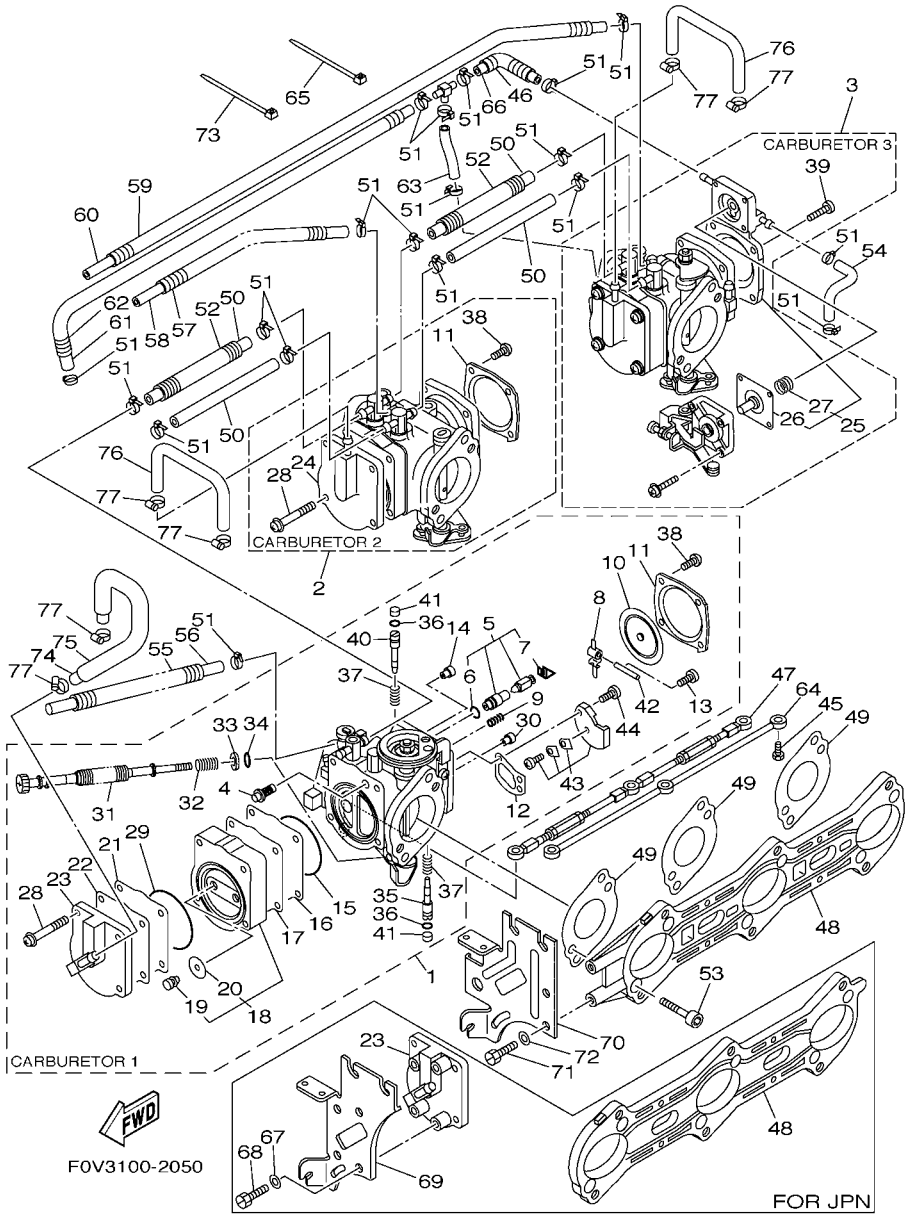

FIG. 5 CARBURETOR

REF. NO.	PART NO.	DESCRIPTION	U49	GENE	JPN			REMARKS
50	90445–11M73	HOSE	4		4			
51	35H–14139–00	CLIP, PIPE	19		19			
52	90446–17MG6	HOSE	2		2			
53	66E–14162–01	BOLT, HOLDING	6					FOR U49
	68N–14162–00	BOLT, HOLDING			6			FOR JPN
54	90445–07004	HOSE	1		1			
55	90446–10MG0	HOSE	1		1			
56	90446–07MG1	HOSE	1		1			
57	90446–10MG2	HOSE	1		1			
58	90446–07MG3	HOSE	1		1			
59	90446–10MG4	HOSE	1		1			
60	90446–07MG5	HOSE	1		1			
61	90445–07005	HOSE	1		1			
62	90447–07004	HOSE, WITH SPRING	1		1			
63	90445–07003	HOSE	1		1			
64	68N–14585–00	ROD, CHOKE	1		1			
65	4KM–14137–00	CLIP	2		2			
66	66V–14294–00	HOSE	1		1			
67	4XY–14951–00	WASHER			6			FOR JPN
68	68N–14162–10	BOLT, HOLDING			4			FOR JPN
69	68N–14527–00	PLATE			1			FOR JPN
70	66V–14527–00	PLATE	1					FOR U49
71	97095–06012	BOLT	3					FOR U49
72	92995–06600	WASHER	3					FOR U49
73	90465–13M60	CLAMP	3		3			
74	66V–24312–00	PIPE 2	1		1			
75	90446–14MA9	HOSE	1		1			

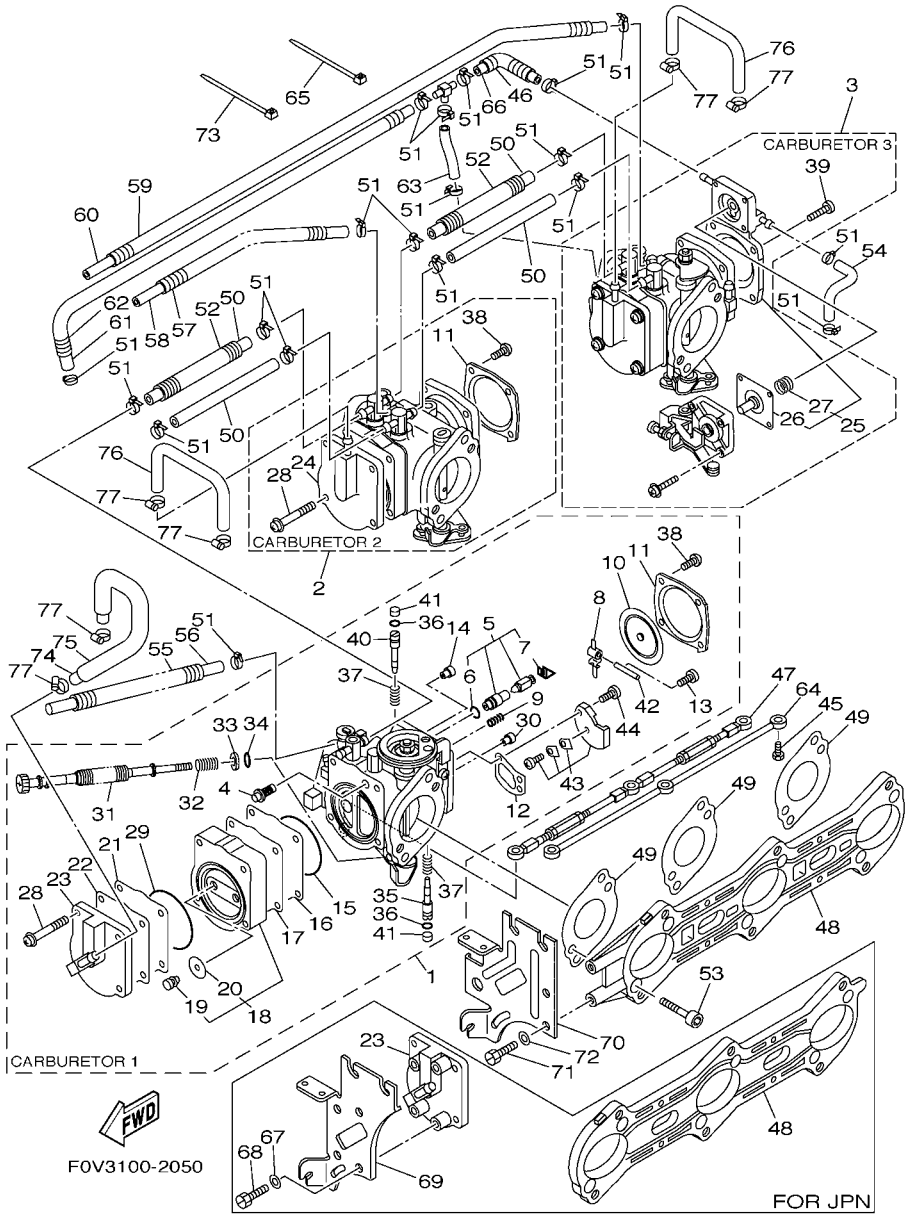

FIG. 5 CARBURETOR

REF. NO.	PART NO.	DESCRIPTION	U49	GENE	JPN			REMARKS
76	66V–24313–01	PIPE 3	2		2			
77	90460–11M17	CLAMP, HOSE	6		6			

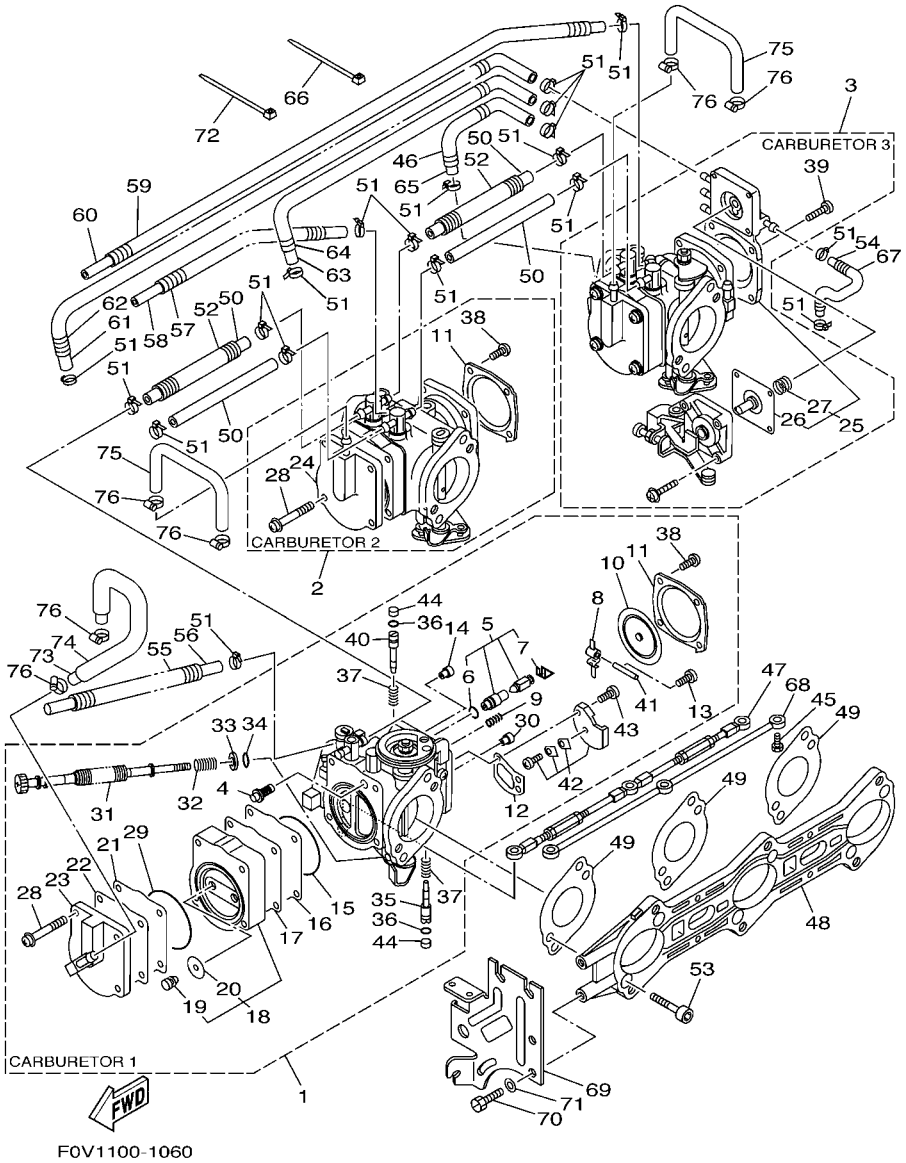

FIG. 6 CARBURETOR 2

REF. NO.	PART NO.	DESCRIPTION	U49	GENE	JPN			REMARKS
1	69E–14301–02	CARBURETOR ASSY 1		1				
2	69E–14302–02	CARBURETOR ASSY 2		1				
3	69E–14303–02	CARBURETOR ASSY 3		1				
4	6R7–14569–00	.STRAINER		3				
5	64T–14916–01	.NEEDLE		3				
6	8F2–14147–00	..O-RING		1				
7	7EG–14159–00	..CLIP		1				
8	6K8–14547–01	.ARM, FLOAT		3				
9	6R7–14253–00	.SPRING		3				
10	6R7–14541–00	.DIAPHRAGM, PUMP		3				
11	6R7–14542–00	.BODY, PUMP 1		2				CARBURETOR 1, 2
12	6K8–14536–11	.GASKET		3				
13	6K8–14503–02	.SCREW		3				
14	3G2–14231–27	.JET, MAIN (#135)		3				
15	66E–14563–01	.O-RING		3				
16	66E–24471–00	.DIAPHRAGM		3				
17	66E–24411–00	.DIAPHRAGM		3				
18	66E–24413–01	.BODY 2		3				
19	65U–24492–00	..BUSH, FULEL PUMP		2				
20	66E–24362–00	..VALVE, CHECK 1		2				
21	66E–24421–00	.VALVE, CHECK		3				
22	66E–24431–00	.GASKET, FUEL PUMP 1		3				
23	66V–24452–00	.COVER		1				CARBURETOR 1
24	66V–24452–10	.COVER		1				CARBURETOR 2, 3
25	67B–13784–00	.COVER, PUMP		1				CARBURETOR 3
26	67B–14170–00	..DIAPHRAGM ASSY		1				CARBURETOR 3
27	67B–14286–00	..SPRING		1				CARBURETOR 3

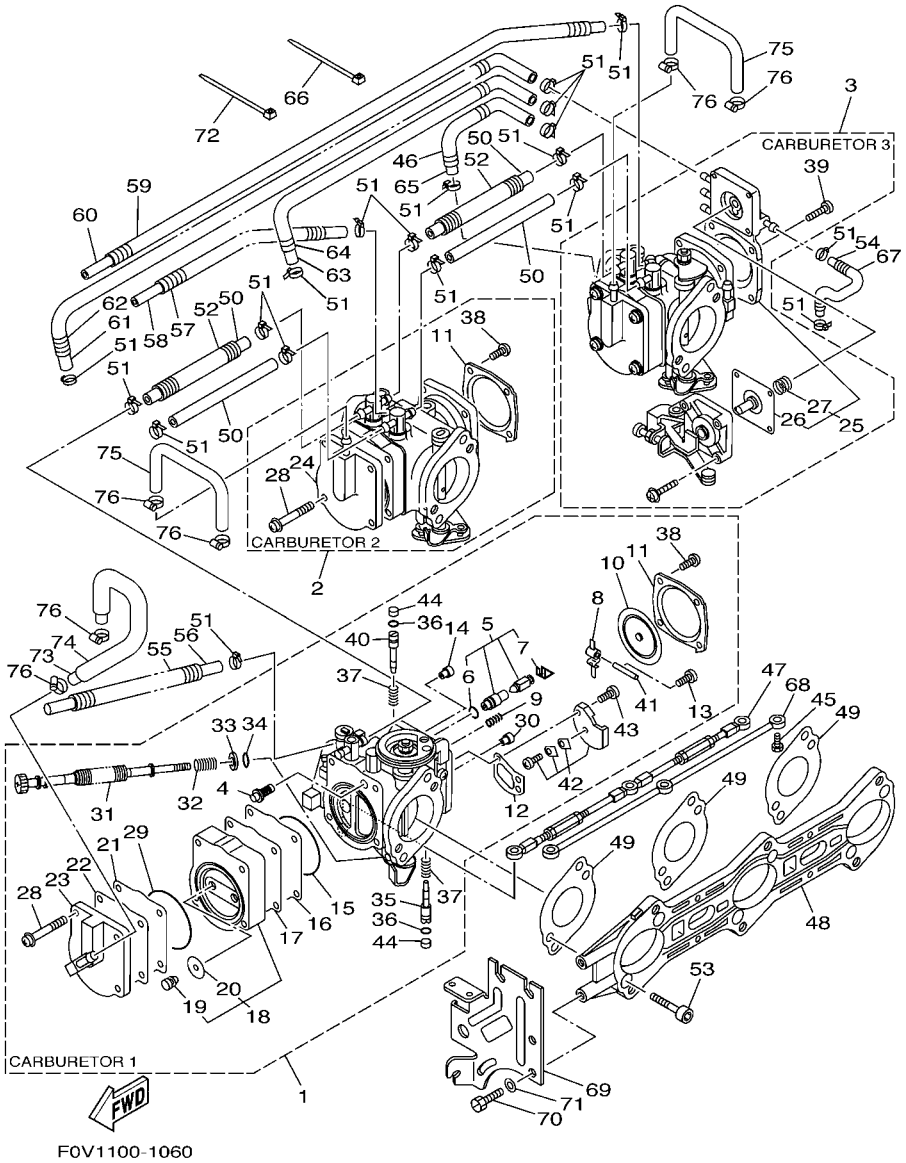

FIG. 6 CARBURETOR 2

REF. NO.	PART NO.	DESCRIPTION	U49	GENE	JPN			REMARKS
28	90157–05M17	.SCREW, PAN HEAD		12				
29	66E–14564–01	.O-RING		3				
30	1HX–1423A–69	.JET, MAIN (# 92.5)		3				
31	66V–14124–00	.SCREW, CABLE ADJUSTING		1				
32	3KW–14932–00	.SPRING, THROTTLE 2		1				
33	812–14235–00	.WASHER, NEEDLE		1				
34	812–14147–00	.O-RING		1				
35	66V–14211–00	.SCREW, PILOT ADJUSTING		3				
36	93210–03119	.O-RING		6				
37	66V–14160–00	.COIL, SPRING		6				
38	97880–05010	.SCREW, PAN HEAD		8				CARBURETOR 1, 2
39	98580–05014	.SCREW, PAN HEAD		4				CARBURETOR 3
40	66V–14946–00	.PLATE, NEEDLE FITTING		3				
41	439–14186–00	.PIN, FLOAT		3				
42	66E–24412–01	.BODY 1		3				
43	6K8–14523–11	.SCREW, STOP		6				
44	67B–14118–00	.CAP		6				
45	68N–14486–00	SCREW, ROD		3				
46	90446–10MG9	HOSE		1				
47	66V–41217–00	ROD, ACCEL. LEVER		1				
48	66V–14146–00	PLATE		1				
49	66E–14398–00	GASKET		3				
50	90445–11M73	HOSE		4				
51	35H–14139–00	CLIP, PIPE		19				
52	90446–17MG6	HOSE		2				
53	66E–14162–01	BOLT, HOLDING		6				
54	90445–07M60	HOSE		1				

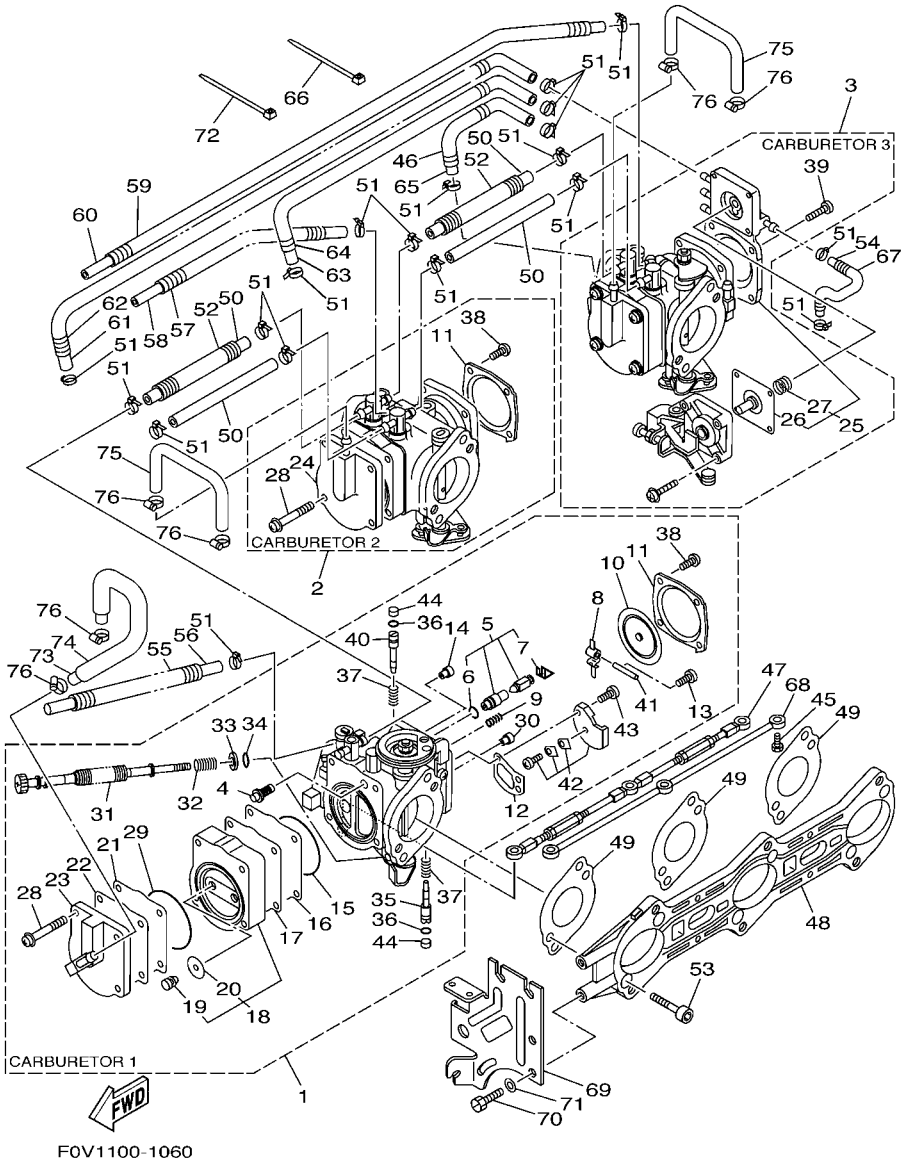

FIG. 6 CARBURETOR 2

REF. NO.	PART NO.	DESCRIPTION	U49	GENE	JPN			REMARKS
55	90446–10MG0	HOSE		1				
56	90446–07MG1	HOSE		1				
57	90446–10MG2	HOSE		1				
58	90446–07MG3	HOSE		1				
59	90446–10MG4	HOSE		1				
60	90446–07MG5	HOSE		1				
61	90445–07M61	HOSE		1				
62	90446–10MG7	HOSE		1				
63	90445–07M62	HOSE		1				
64	90446–10MG8	HOSE		1				
65	90445–07M63	HOSE		1				
66	4KM–14137–00	CLIP		2				
67	67B–13976–00	PIPE, FUEL 6		1				
68	68N–14585–00	ROD, CHOKE		1				
69	66V–14527–00	PLATE		1				
70	97095–06012	BOLT		3				
71	92995–06600	WASHER		3				
72	90465–13M60	CLAMP		3				
73	66V–24312–00	PIPE 2		1				
74	90446–14MA9	HOSE		1				
75	66V–24313–01	PIPE 3		2				
76	90460–11M17	CLAMP, HOSE		6				

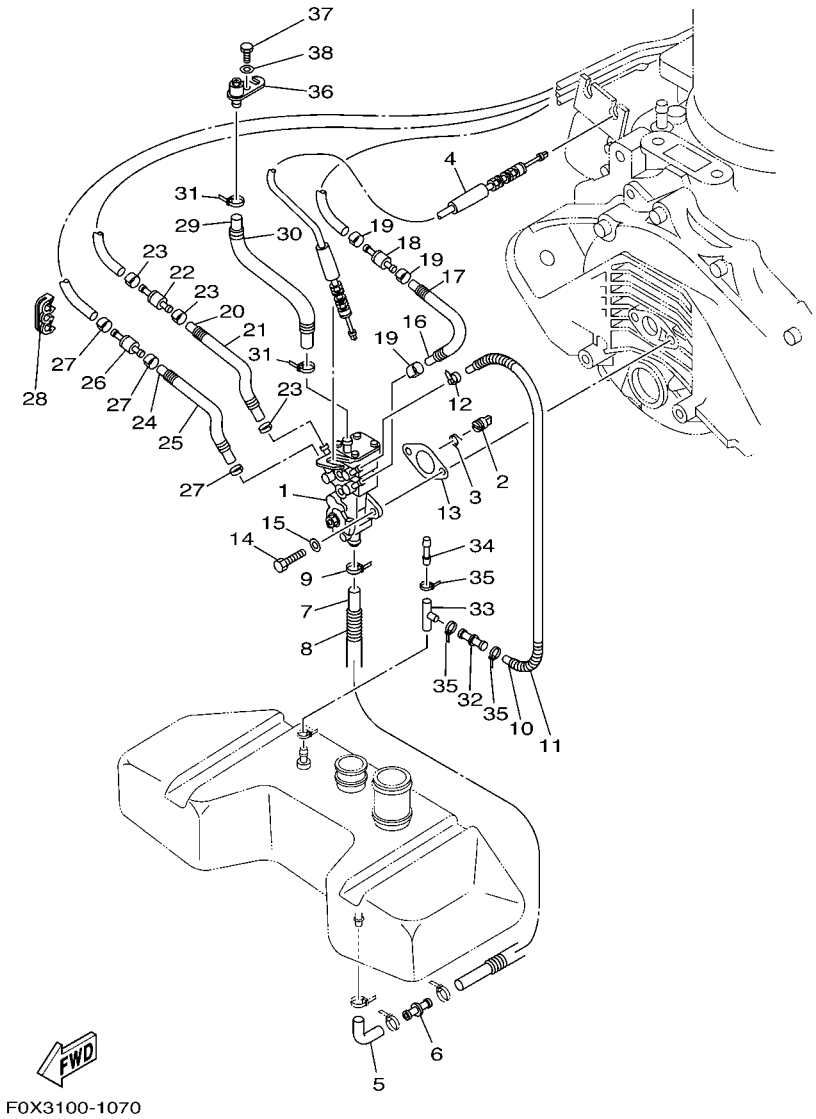

FIG. 7 OIL PUMP

REF. NO.	PART NO.	DESCRIPTION	U49	GENE	JPN			REMARKS
1	66V–13200–00	OIL INJECTION PUMP ASSY	1	1	1			
2	65U–13132–00	JOINT	1	1	1			
3	66E–13469–00	SPRING	1	1	1			
4	66V–26320–00	PUMP CABLE ASSY	1	1	1			
5	66V–13416–01	PIPE, OIL 1	1	1	1			
6	66V–51142–00	CONNECTION	1	1	1			
7	90445–11M33	HOSE (L440)	1	1	1			
8	90446–17ME2	HOSE (L350)	1	1	1			
9	90465–11M10	CLAMP	1	1	1			
10	90445–07M09	HOSE (L380)	1	1	1			
11	90446–10ME3	HOSE (L330)	1	1	1			
12	90468–02001	CLIP	1	1	1			
13	63M–13116–00	GASKET, PUMP CASE	1	1	1			
14	97095–06020	BOLT	2	2	2			
15	92995–06600	WASHER	2	2	2			
16	90445–07007	HOSE (L110)	1	1	1			
17	90446–10M82	HOSE (L90)	1	1	1			
18	67X–13183–00	VALVE, CHECK	1	1	1			
19	90468–02001	CLIP	3	3	3			
20	90445–07007	HOSE (L110)	1	1	1			
21	90446–10M82	HOSE (L90)	1	1	1			
22	67X–13183–00	VALVE, CHECK	1	1	1			
23	90468–02001	CLIP	3	3	3			
24	90445–07007	HOSE (L110)	1	1	1			
25	90446–10M82	HOSE (L90)	1	1	1			
26	67X–13183–00	VALVE, CHECK	1	1	1			
27	90468–02001	CLIP	3	3	3			

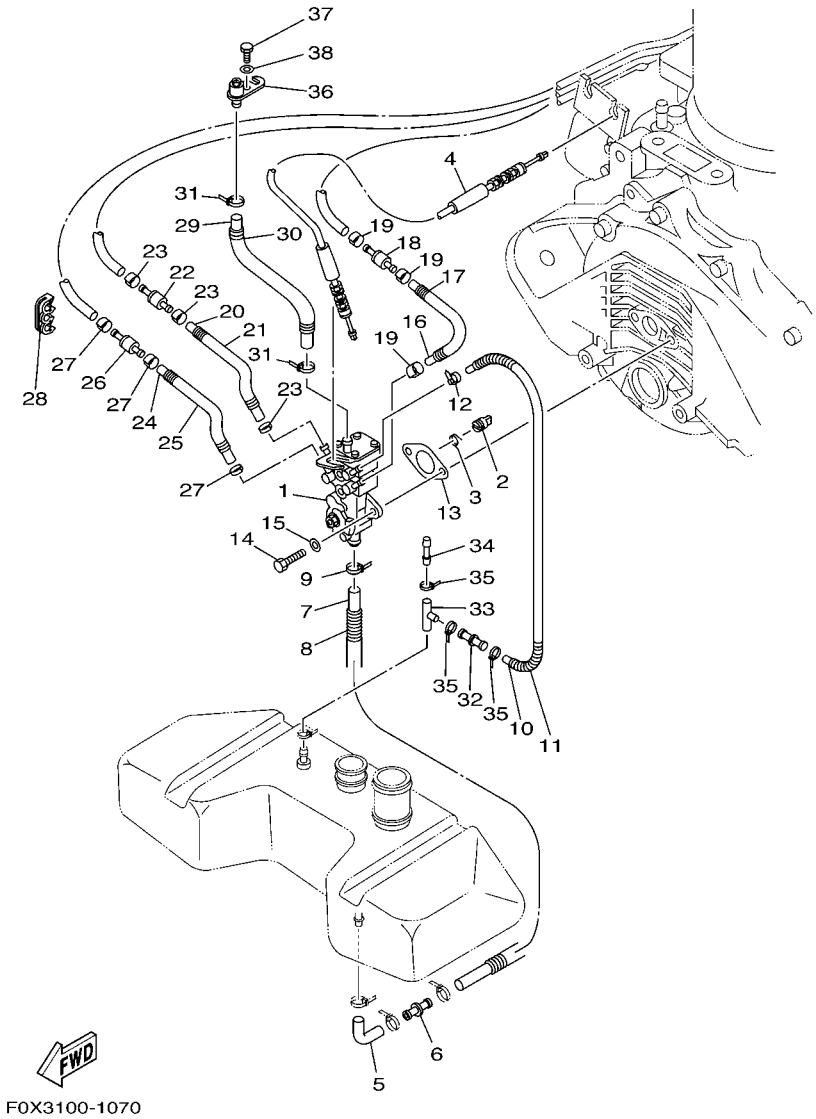

FIG. 7 OIL PUMP

REF. NO.	PART NO.	DESCRIPTION	U49	GENE	JPN			REMARKS
28	90464–07M05	CLAMP	1	1	1			
29	66V–24314–00	PIPE 4	1	1	1			
30	90446–17ME8	HOSE (L120)	1	1	1			
31	90465–11M10	CLAMP	2	2	2			
32	63M–13132–00	JOINT	1	1	1			
33	63M–24378–00	PIPE, JOINT 4	1	1	1			
34	6G8–24376–00	PIPE, JOINT 1	1	1	1			
35	90465–11829	CLAMP	3	3	3			YMUS
36	66V–13185–00	BOLT, BREATHER	1	1	1			
37	97095–06012	BOLT	1	1	1			
38	92995–06600	WASHER	1	1	1			

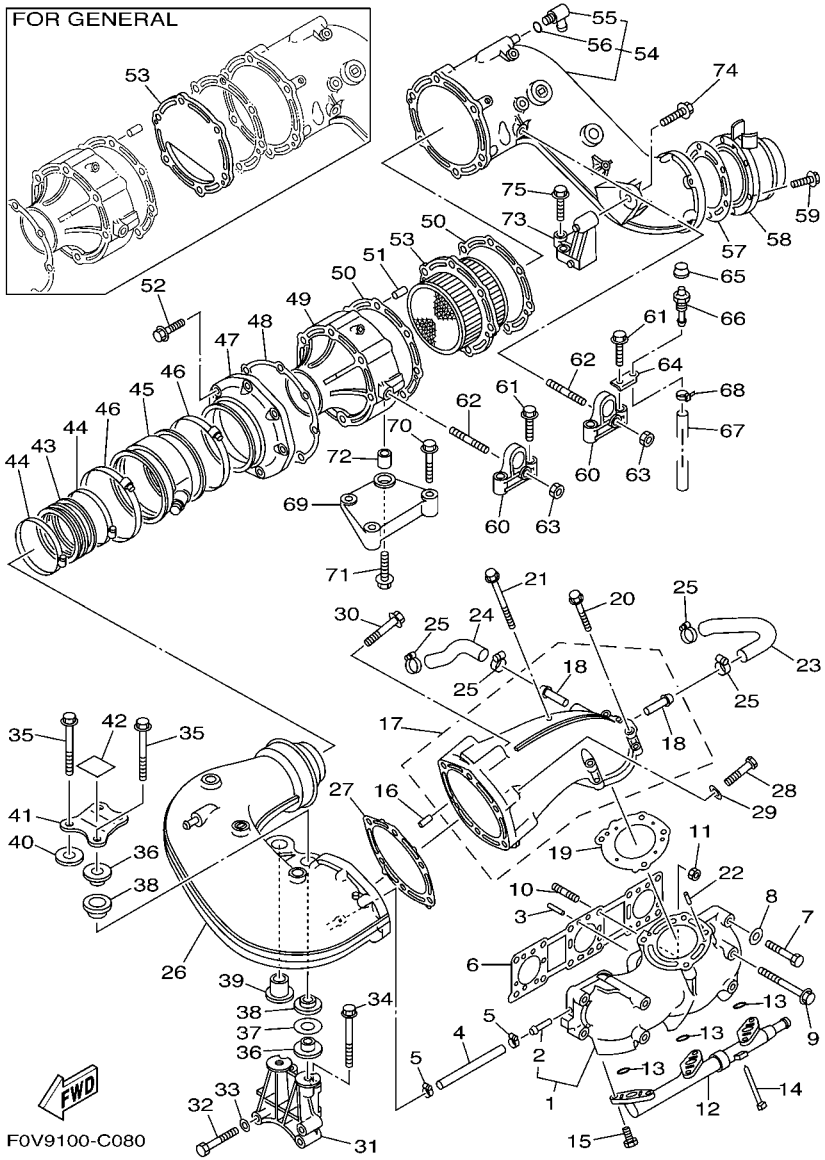

FIG. 8 EXHAUST 1

REF. NO.	PART NO.	DESCRIPTION	U49	GENE	JPN			REMARKS
1	66V–14711–00–94	MUFFLER 1	1	1	1			
2	65U–14251–00	.NIPPLE	1	1	1			
3	93606–12019	PIN, DOWEL	2	2	2			
4	90445–12M10	HOSE (L125)	1	1	1			
5	90460–11M17	CLAMP, HOSE	2	2	2			
6	66V–14613–00	GASKET, EXHAUST PIPE	1	1	1			
7	97013–10055	BOLT	6	6	6			
8	92903–10600	WASHER, PLATE	6	6	6			
9	90119–10M11	BOLT, WITH WASHER	4	4	4			
10	90116–10M68	BOLT, STUD	2	2	2			
11	90179–10M36	NUT	2	2	2			
12	66V–24377–00	PIPE, JOINT 3	1	1	1			
13	93210–17MA4	O-RING	3	3	3			
14	90465–13M36	CLAMP	1	1	1			
15	90109–06M99	BOLT	6	6	6			FOR U49, JPN
16	93606–12019	PIN, DOWEL	2	2	2			
17	60T–14712–00–94	RING, JOINT	1	1	1			
18	66E–51129–00	.NIPPLE	2	2	2			
19	66V–14739–00	GASKET, MUFFLER DAMPER 1	1	1	1			
20	90119–10M20	BOLT, WITH WASHER	3	3	3			
21	90119–10M19	BOLT, WITH WASHER	1	1	1			
22	93606–12019	PIN, DOWEL	2	2	2			
23	66V–12576–00	HOSE 1	1	1	1			
24	66V–12577–00	HOSE 2	1	1	1			
25	90450–22M14	HOSE CLAMP ASSY	4	4	4			
26	66V–14721–01–94	MUFFLER 2	1	1	1			
27	66V–14749–00	GASKET, MUFFLER DAMPER 2	1	1	1			

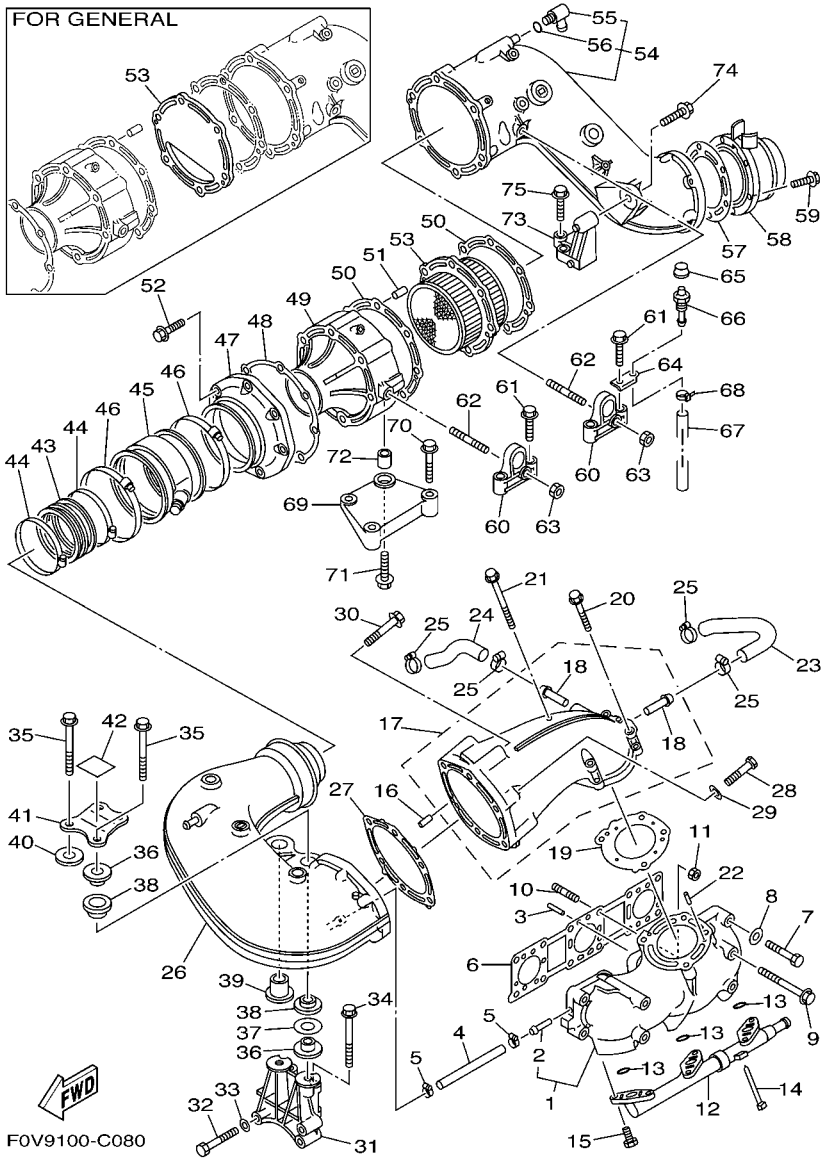

FIG. 8 EXHAUST 1

REF. NO.	PART NO.	DESCRIPTION	U49	GENE	JPN			REMARKS
28	97013–10065	BOLT	1	1	1			
29	92903–10600	WASHER, PLATE	1	1	1			
30	97513–10585	BOLT, WITH WASHER	5	5	5			
31	66V–14771–01–94	STAY, MUFFLER 1	1	1	1			
32	97013–10060	BOLT	2	2	2			
33	92903–10600	WASHER, PLATE	2	2	2			
34	97513–10590	BOLT, WITH WASHER	2	2	2			
35	90119–10M23	BOLT, WITH WASHER	2	2	2			
36	90387–12M05	COLLAR	2	2	2			
37	90201–28008	WASHER, PLATE	1	1	1			
38	90480–30M78	GROMMET	2	2	2			
39	66V–14779–00	COLLAR	1	1	1			
40	66V–1477L–00	PLATE 2	1	1	1			
41	66V–11152–00	BRACKET, CYLINDER HEAD COVER	1	1	1			
42	66V–14488–00	LABEL, CAUTION	1	1	1			
43	66V–14625–00	JOINT, EXHAUST 2	1	1	1			
44	90460–90M19	CLAMP, HOSE	2	2	2			
45	66V–14615–02	JOINT, EXHAUST 1	1	1	1			
46	90460–99M20	CLAMP, HOSE	2	2	2			
47	68N–41113–00–94	OUTER COVER, EXHAUST	1	1	1			
48	66V–41114–00	GASKET, EXHAUST OUTER COVER	1	1	1			
49	68N–41111–00–94	INNER COVER, EXHAUST	1	1	1			
50	66V–41124–00	GASKET, EXHAUST OUTER COVER	2	2	2			
51	93606–14081	PIN, DOWEL	2	2	2			
52	90119–08M63	BOLT, WITH WASHER	6	6	6			
53	66V–14740–02	CATALYST ASSY.	1		1			FOR U49, JPN
	67B–1465A–00	FLANGE 1		1				FOR GENE

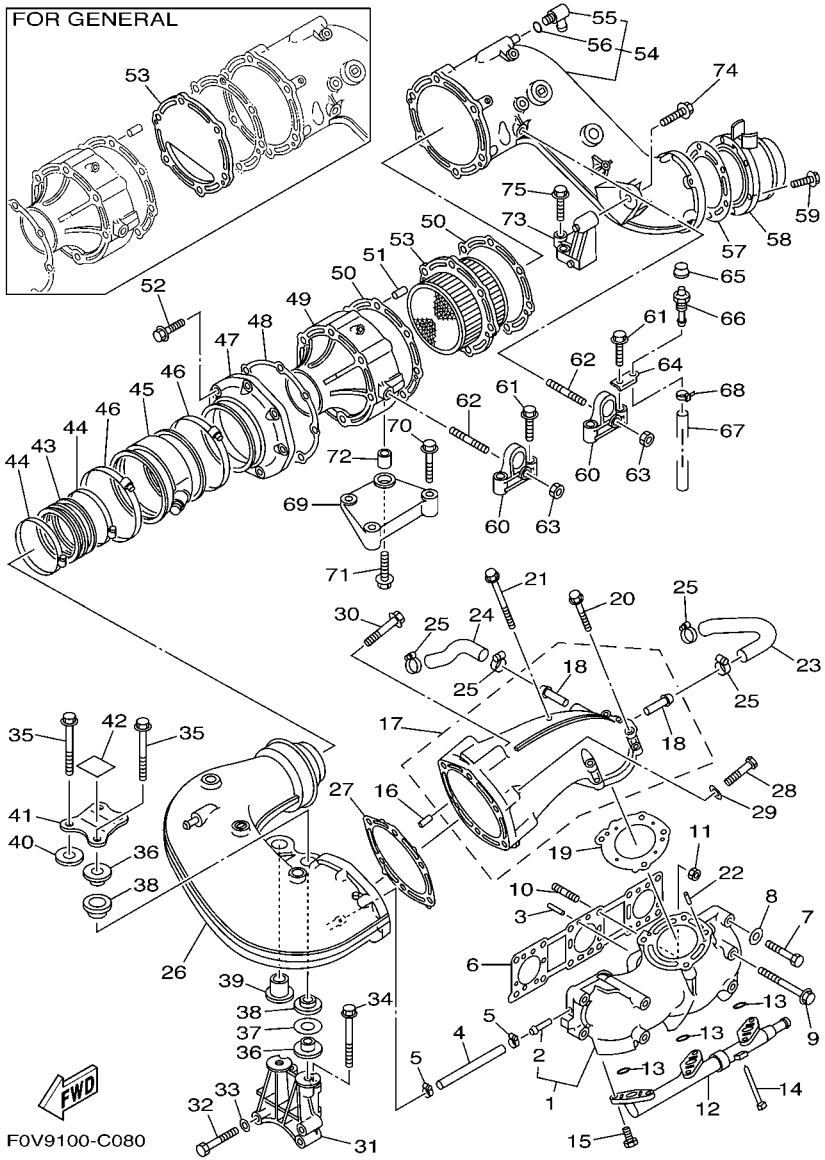

FIG. 8 EXHAUST 1

REF. NO.	PART NO.	DESCRIPTION	U49	GENE	JPN			REMARKS
54	68N–41123–00–94	OUTER COVER, EXHAUST	1		1			FOR U49, JPN
	68B–41123–00–94	OUTER COVER, EXHAUST		1				FOR GENE
55	67X–12481–00	.PIPE 1	1	1	1			
56	93210–17001	.O-RING	1	1	1			
57	68N–14623–00	GASKET, EXHAUST PIPE	1	1	1			
58	68N–14784–00–94	PIPE, TAIL	1	1	1			
59	90105–08M22	BOLT, FLANGE	6	6	6			
60	66E–14771–01–94	STAY, MUFFLER 1	2	2	2			
61	90119–10M18	BOLT, WITH WASHER	4	4	4			
62	90116–10M66	BOLT, STUD	2	2	2			
63	90179–10M35	NUT	2	2	2			
64	66V–1477K–00	PLATE 1	1	1	1			
65	663–45119–00	CAP, GREASE NIPPLE	1	1	1			
66	61L–5169A–00	NIPPLE, GREASE	1	1	1			
67	90445–09M33	HOSE (L580)	1	1	1			
68	90465–11M10	CLAMP	1	1	1			
69	66V–14782–00–94	STAY 5	1	1	1			
70	90105–10M87	BOLT, FLANGE	2	2	2			
71	97513–10545	BOLT, WITH WASHER	2	2	2			
72	99590–14016	PIN, DOWEL	1	1	1			
73	68N–14791–00–94	STAY, MUFFLER	1	1	1			
74	90119–10M00	BOLT, WITH WASHER	2	2	2			
75	90119–10M13	BOLT, WITH WASHER	1	1	1			

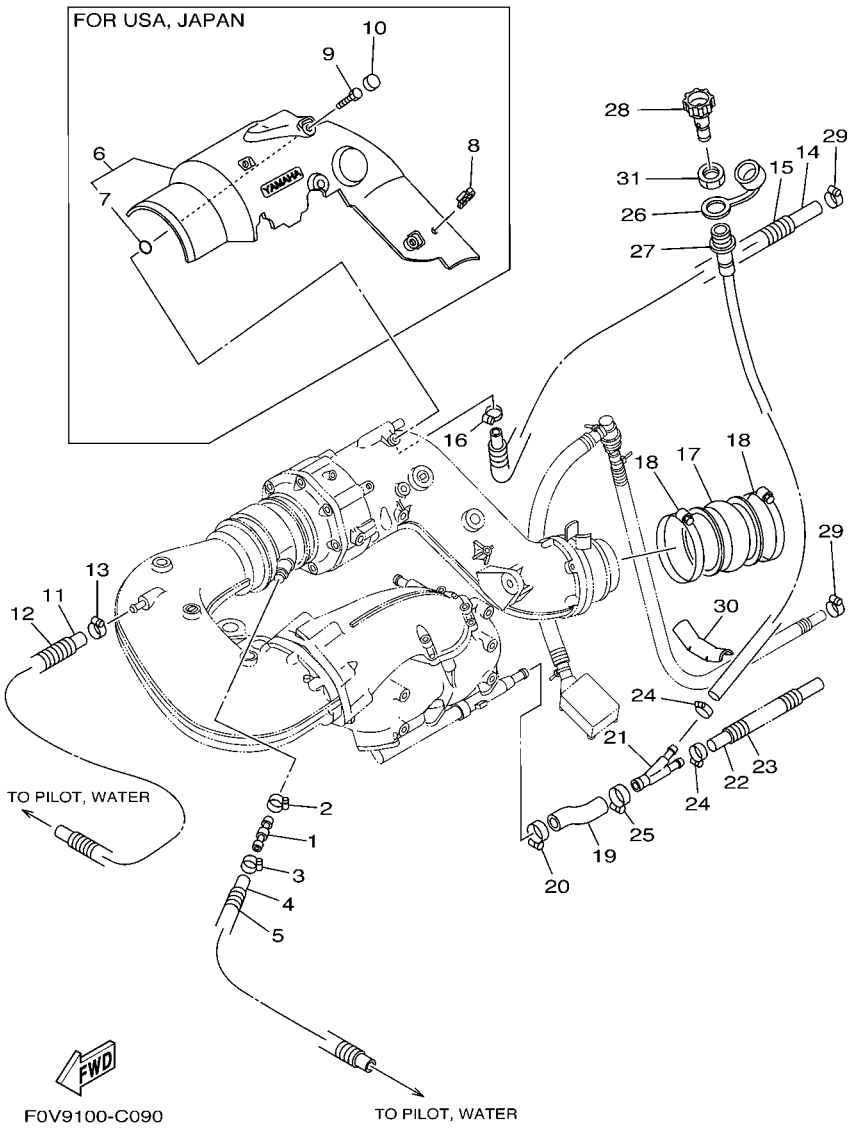

FIG. 9 EXHAUST 2

REF. NO.	PART NO.	DESCRIPTION	U49	GENE	JPN			REMARKS
1	60E–12594–00	JOINT, HOSE 4	1	1	1			
2	90450–18M09	HOSE CLAMP ASSY	1	1	1			
3	90450–14M05	HOSE CLAMP ASSY	1	1	1			
4	90445–14M33	HOSE (L1150)	1	1	1			
5	90446–20ME4	HOSE (L700)	1	1	1			
6	66V–14718–00	PROTECTOR, MUFFLER 1	1		1			FOR U49, JPN
7	90430–09M10	.GASKET	3		3			FOR U49, JPN
8	90464–07M56	CLAMP	1		1			FOR U49, JPN
9	90109–06M99	BOLT	3		3			FOR U49, JPN
10	66V–15779–00	COVER	3		3			FOR U49, JPN
11	90445–14M09	HOSE (L1020)	1	1	1			
12	90446–20M70	HOSE (L800)	1	1	1			
13	90450–18M09	HOSE CLAMP ASSY	1	1	1			
14	90445–21002	HOSE (L900)	1	1	1			
15	90446–27M95	HOSE (L800)	1	1	1			
16	90450–22M14	HOSE CLAMP ASSY	1	1	1			
17	66V–14752–00	PIPE, OUTLET	1	1	1			
18	90450–99M02	HOSE CLAMP ASSY	2	2	2			
19	66V–12579–00	HOSE 4	1	1	1			
20	90450–22M14	HOSE CLAMP ASSY	1	1	1			
21	66V–12581–00	JOINT, HOSE 1	1	1	1			
22	90445–18006	HOSE (L660)	1	1	1			
23	90446–24M52	HOSE (L540)	1	1	1			
24	90450–18M09	HOSE CLAMP ASSY	2	2	2			
25	90450–22M14	HOSE CLAMP ASSY	1	1	1			
26	682–84385–01	CAP,1	1	1	1			
27	64T–12580–00	JOINT ASSY	1	1	1			

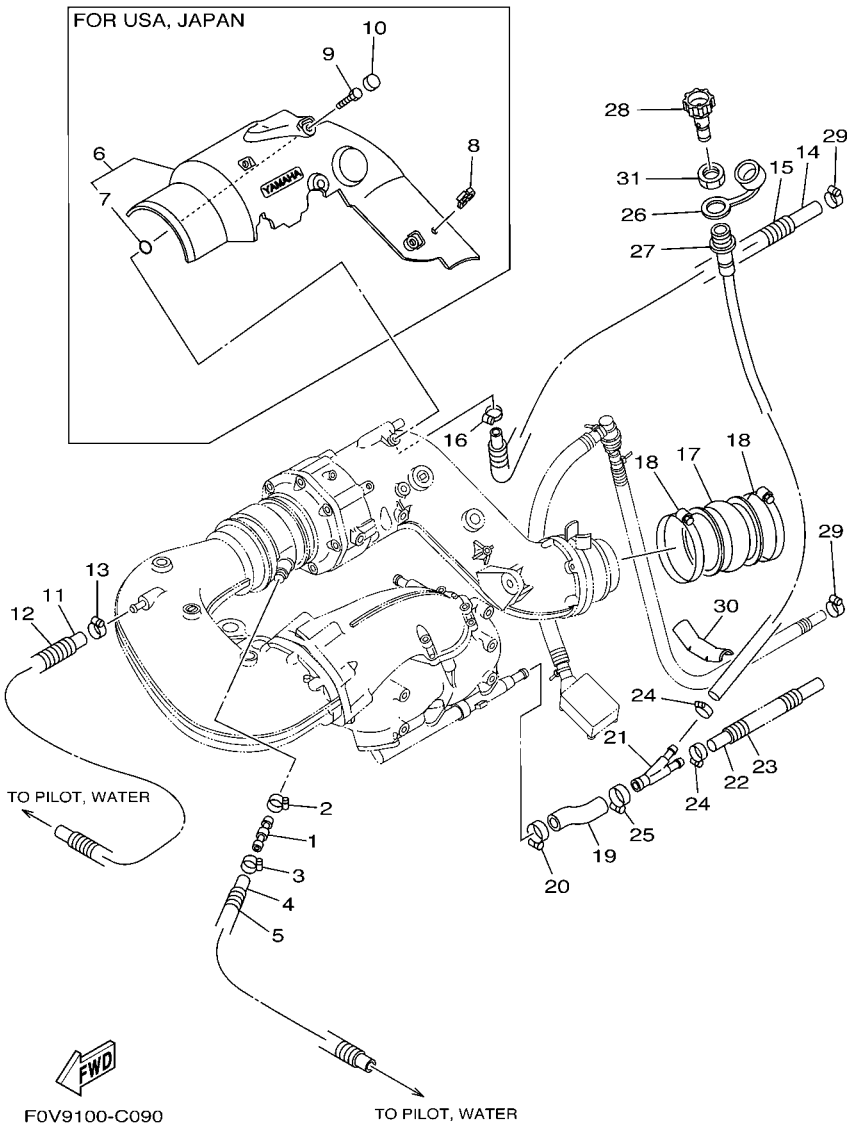

FIG. 9 EXHAUST 2

REF. NO.	PART NO.	DESCRIPTION	U49	GENE	JPN			REMARKS
28	67X–12590–00	CONDUCTION ASSY	1					FOR U49
	67X–12590–20	CONDUCTION ASSY		1				FOR GENE
	67X–12590–10	CONDUCTION ASSY			1			FOR JPN
29	90601–118UF	BAND, HOSE 18	2	2	2			YMUS
30	GJ1–U7578–21	PACKING, HOSE 2	1	1	1			YMUS
31	EU0–61652–00	NUT	1	1	1			

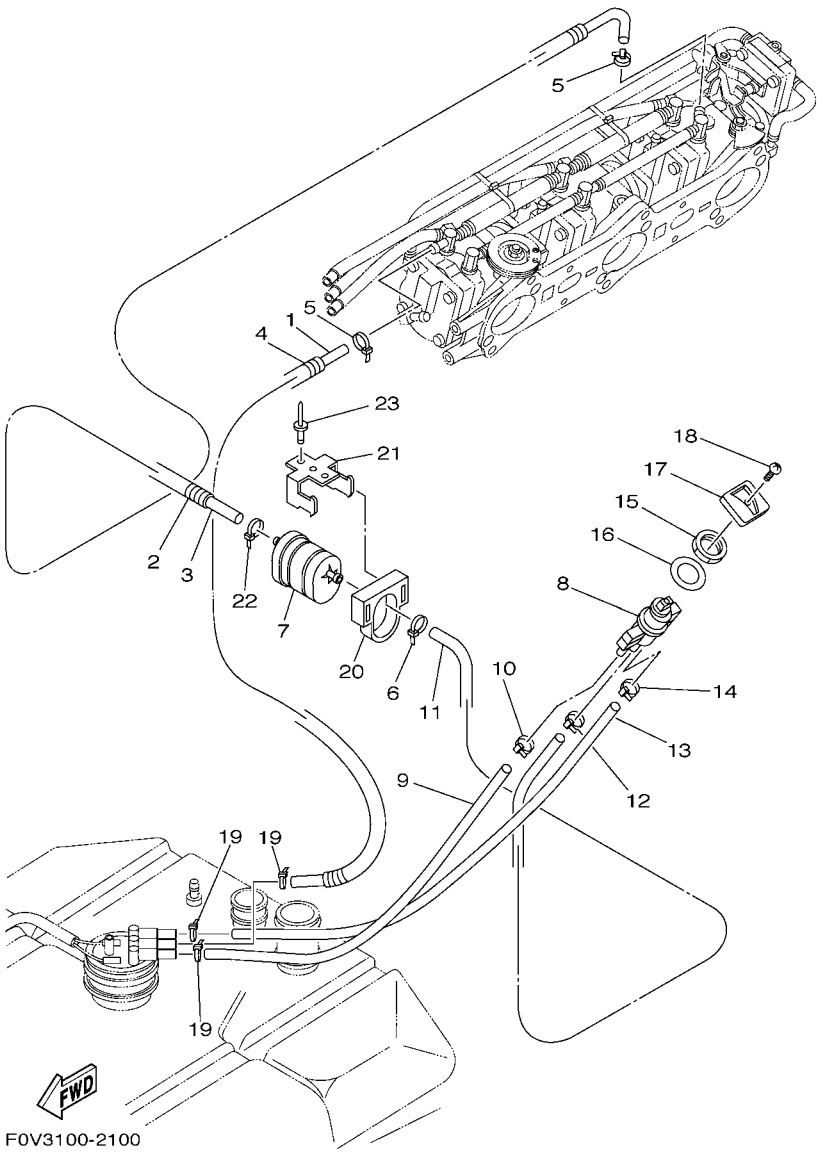

FIG. 10 FUEL

REF. NO.	PART NO.	DESCRIPTION	U49	GENE	JPN			REMARKS
1	90445–11M70	HOSE (L1000)	1	1	1			
2	90446–17MA5	HOSE (L900)	1	1	1			
3	90445–11019	HOSE (L1250)	1	1	1			
4	90447–13005	HOSE, WITH SPRING	1	1	1			
5	90465–11M10	CLAMP	2	2	2			
6	90465–11829	CLAMP	1	1	1			YMUS
7	66V–24560–00	FILTER ASSY	1	1	1			
8	66V–24500–02	FUEL COCK ASSY 1	1	1	1			
9	90445–11M67	HOSE (L450)	1	1	1			
10	90465–11M10	CLAMP	1	1	1			
11	90445–11M68	HOSE (L450)	1	1	1			
12	90465–11M10	CLAMP	1	1	1			
13	90445–11M69	HOSE (L450)	1	1	1			
14	90465–11M10	CLAMP	1	1	1			
15	90170–22187	NUT	1	1	1			
16	90202–229U1	WASHER, PLATE	1	1	1			YMUS
17	F0D–6777C–00	LEVER, COCK	1	1	1			
18	98980–04008	SCREW, BIND	1	1	1			
19	90465–11829	CLAMP	3	3	3			YMUS
20	EU0–U7817–00	HOLDER, FILTER	1	1	1			YMUS
21	FN8–67816–00	BRACKET, FUEL FILTER	1	1	1			
22	90465–11829	CLAMP	1	1	1			YMUS
23	90267–489U1	RIVET,BLIND	2	2	2			YMUS

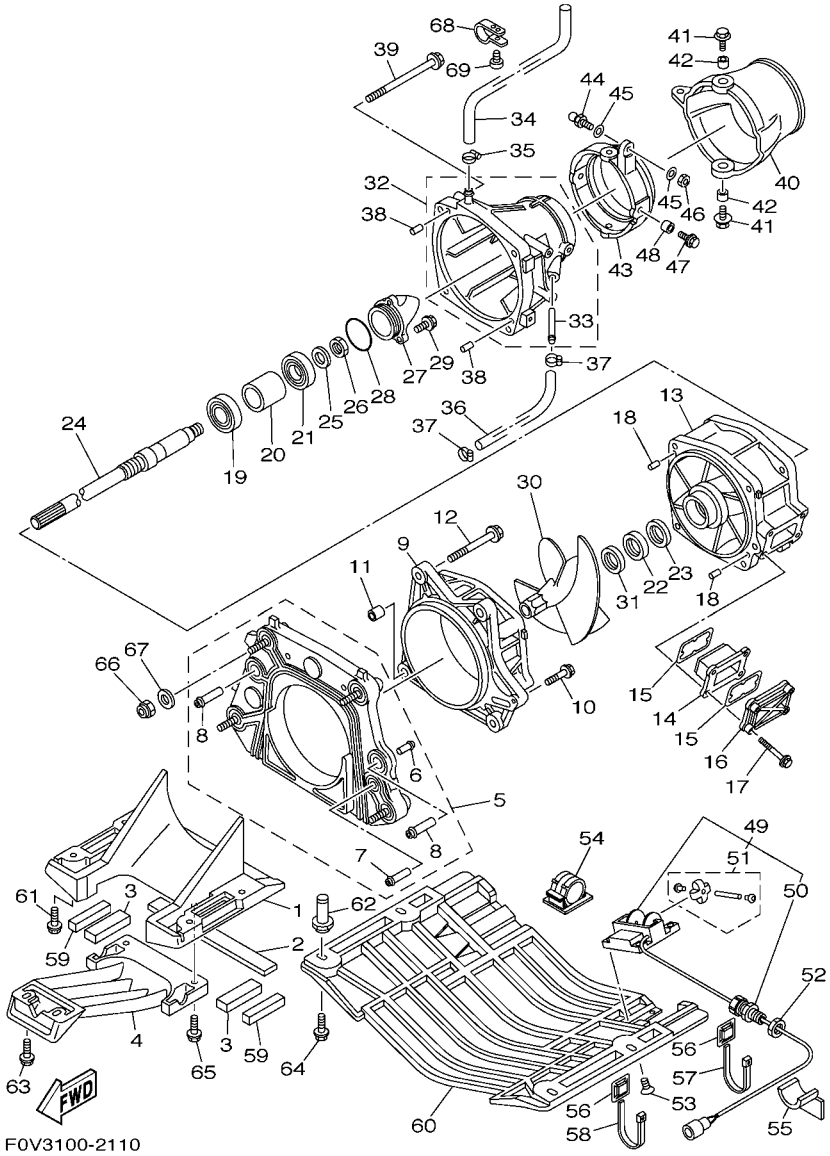

FIG. 11 JET UNIT 1

REF. NO.	PART NO.	DESCRIPTION	U49	GENE	JPN			REMARKS
1	66V–51311–00–94	DUCT, INTAKE	1	1	1			
2	66V–R1367–00	FELT, PACKING	1	1	1			YMUS
3	66V–R1368–00	FELT, PACKING	1	1	1			YMUS
4	66V–51333–00–94	SCREEN, INTAKE	1	1	1			
5	66V–G5831–02	PLATE, TRANSOM	1	1	1			YMUS
6	65A–R1129–00	.NIPPLE	1	1	1			YMUS
7	66V–51129–01	.NIPPLE	1	1	1			
8	66V–51129–10	.NIPPLE	2	2	2			
9	66V–51312–01–94	HOUSING, IMPELLER	1	1	1			
10	90119–06835	BOLT, WITH WASHER	1	1	1			YMUS
11	99590–14016	PIN, DOWEL	2	2	2			
12	90119–10836	BOLT, WITH WASHER	4	4	4			YMUS
13	66V–51315–00–94	DUCT, IMPELLER	1	1	1			
14	66V–46882–00	FILTER	1	1	1			
15	66V–42414–00	O-RING	2	2	2			
16	66V–45214–00–94	COVER, WATER INLET	1	1	1			
17	90119–06800	BOLT, WITH WASHER	4	4	4			YMUS
18	93606–12019	PIN, DOWEL	2	2	2			
19	93306–205U0	BEARING	1	1	1			
20	65V–45538–00	SPACER 1	1	1	1			
21	93306–304U1	BEARING	1	1	1			
22	93101–28M66	OIL SEAL	1	1	1			
23	93101–28M65	OIL SEAL	1	1	1			
24	68Y–45511–00	SHAFT, DRIVE	1	1	1			
25	9299R–16600	WASHER	1	1	1			YMUS
26	9531P–16700	NUT	1	1	1			YMUS
27	65A–R1326–10	CAP	1	1	1			YMUS

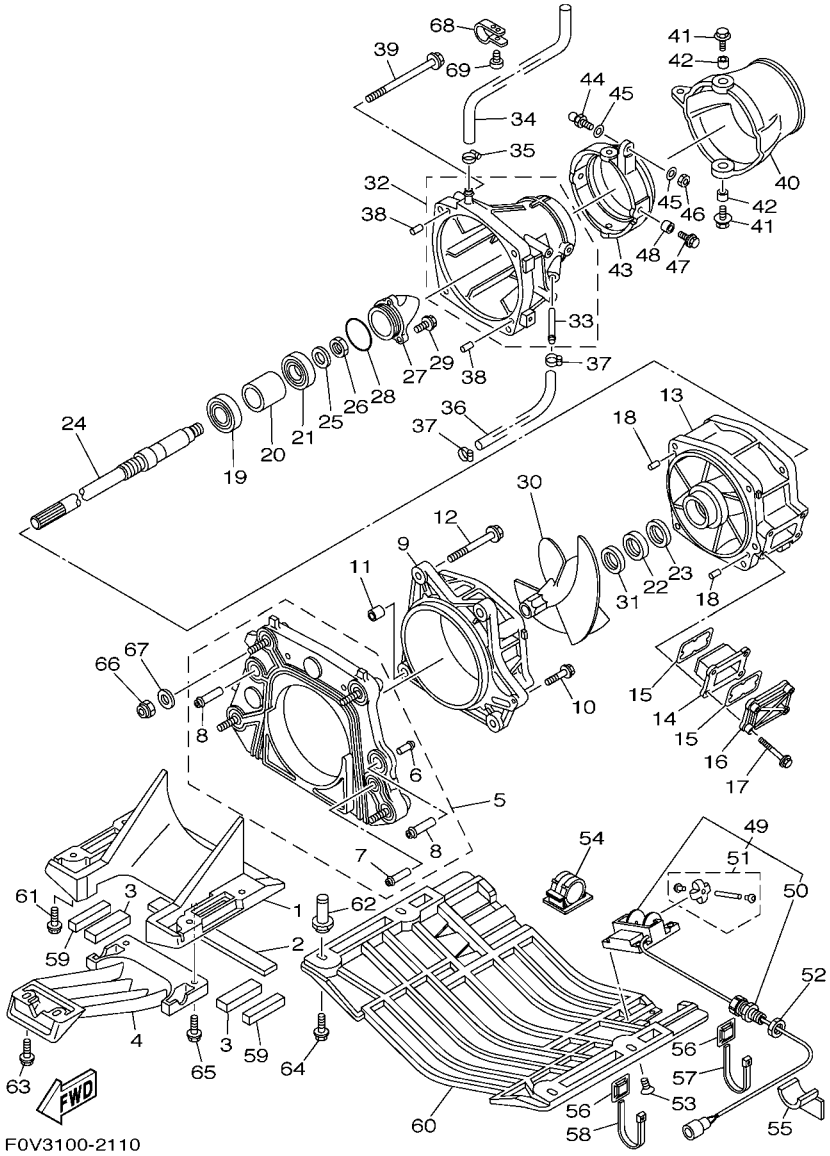

FIG. 11 JET UNIT 1

REF. NO.	PART NO.	DESCRIPTION	U49	GENE	JPN			REMARKS
28	93210–464A3	O-RING	1	1	1			
29	90119–069UB	BOLT, WITH WASHER	3	3	3			YMUS
30	68N–R1321–00	IMPELLER	1	1	1			YMUS
31	66V–R1348–10	SPACER	1	1	1			YMUS
32	66V–51318–00–94	NOZZLE	1	1	1			
33	63M–51334–00	.NIPPLE,HOSE	1	1	1			
34	90445–16M09	HOSE (L310)	1	1	1			
35	90601–118UF	BAND, HOSE 18	1	1	1			YMUS
36	90445–14898	HOSE (L270)	1	1	1			YMUS
37	90465–11829	CLAMP	2	2	2			YMUS
38	93606–12019	PIN, DOWEL	2	2	2			
39	90119–10837	BOLT, WITH WASHER	4	4	4			YMUS
40	66V–R1313–01	NOZZLE,DEFLECTOR	1	1	1			YMUS
41	90119–089UE	BOLT, WITH WASHER	2	2	2			YMUS
42	90387–08M06	COLLAR	2	2	2			
43	66G–51190–00–94	RING,TRIM	1	1	1			
44	GH3–U146E–00	STUD, JOINT BALL	1	1	1			YMUS
45	90201–068M4	WASHER, PLATE	2	2	2			YMUS
46	9538R–06700	NUT	1	1	1			YMUS
47	90119–089UE	BOLT, WITH WASHER	2	2	2			YMUS
48	90387–08M06	COLLAR	2	2	2			
49	F0V–U8K31–00	SENSOR SPEED	1	1	1			YMUS
50	EU0–67267–20	.CONNECTOR, CABLE	1	1	1			
51	GJ1–U835D–00	.SERVICE KIT (SPEED SENSOR)	1	1	1			YMUS
52	EU0–62241–30	NUT, DRAIN 1	1	1	1			
53	9878R–05512	SCREW, FLAT HEAD	4	4	4			YMUS
54	90600–925U9	CLAMP	2	2	2			YMUS

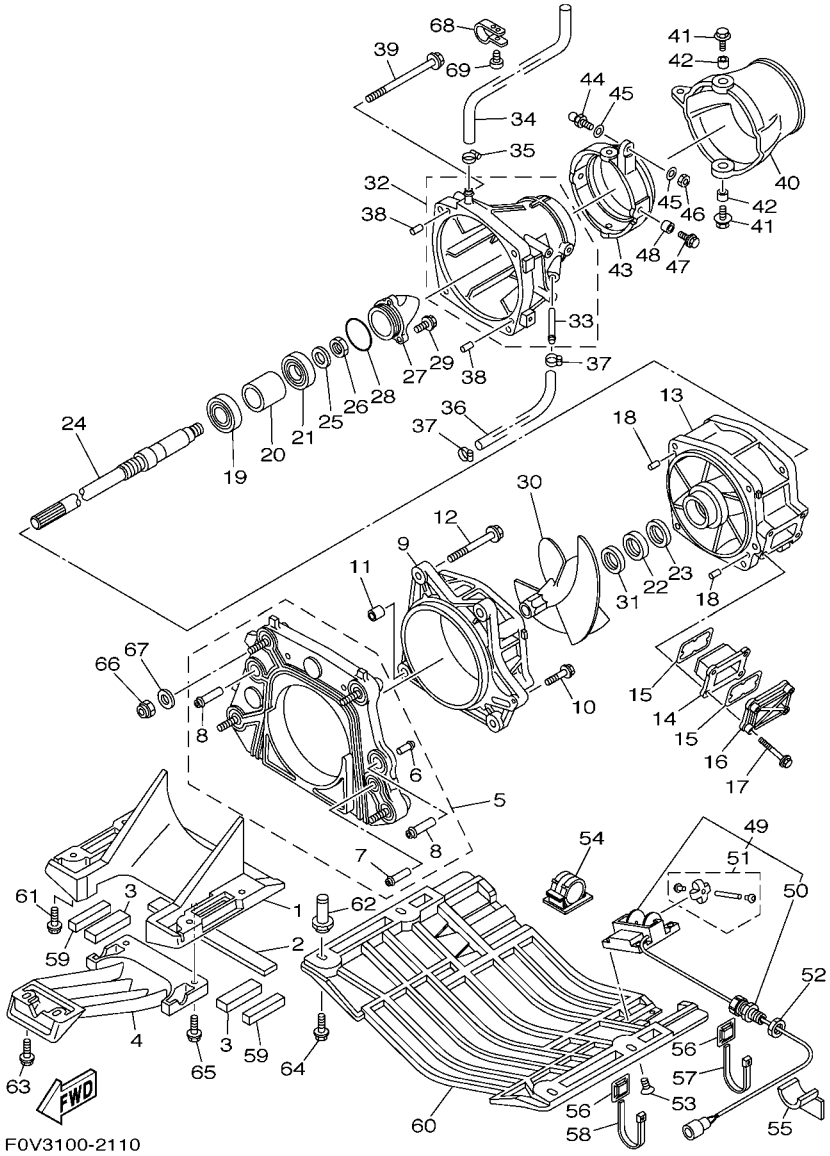

FIG. 11 JET UNIT 1

REF. NO.	PART NO.	DESCRIPTION	U49	GENE	JPN			REMARKS
55	GJ1–U7578–11	PACKING, HOSE 2	1	1	1			YMUS
56	90600–900U6	BASE, CLAMP	8	8	8			YMUS
57	90464–40825	CLAMP	7	7	7			YMUS
58	90464–99801	CLAMP	1	1	1			YMUS
59	F0V–U7525–01	PACKING	1	1	1			YMUS
60	F0V–U273B–00	PLATE 2	1	1	1			YMUS
61	90119–08823	BOLT, WITH WASHER	4	4	4			YMUS
62	90179–06814	NUT	4	4	4			YMUS
63	90119–069UK	BOLT, WITH WASHER	2	2	2			YMUS
64	90119–08823	BOLT, WITH WASHER	4	4	4			YMUS
65	90119–069UB	BOLT, WITH WASHER	2	2	2			YMUS
66	9572R–10300	NUT, FLANGE	4	4	4			YMUS
67	90201–10801	WASHER, PLATE	4	4	4			YMUS
68	90600–921U1	CLIP, NYLON 21	1	1	1			YMUS
69	97780–50514	SCREW, TAPPING	1	1	1			

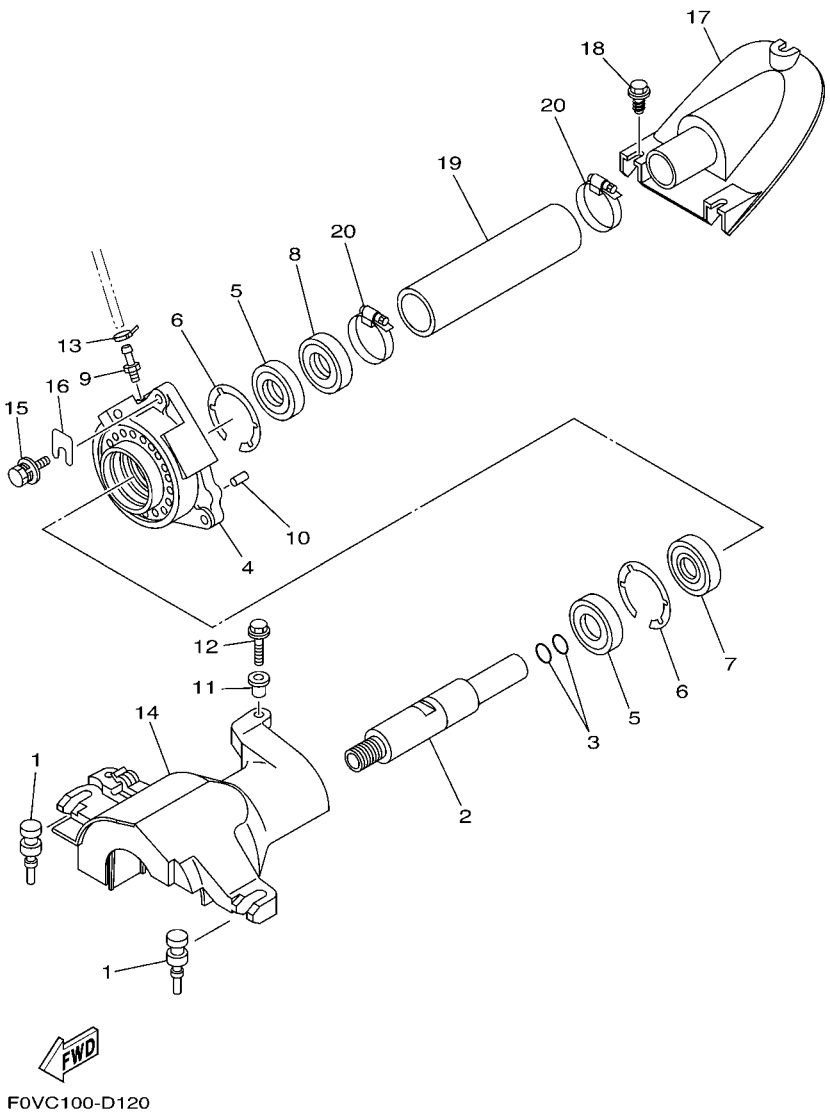

FIG. 12 JET UNIT 2

REF. NO.	PART NO.	DESCRIPTION	U49	GENE	JPN			REMARKS
1	90480–06M46	GROMMET	2	2	2			
2	68N–51323–00	SHAFT, COUPLOR	1	1	1			
3	93210–19MJ4	O-RING	2	2	2			
4	61X–45332–03–94	HOUSING, BEARING	1	1	1			
5	93101–25M55	OIL SEAL	2	2	2			
6	93430–47M04	CIRCLIP	2	2	2			
7	93306–205U6	BEARING	1	1	1			
8	93101–25M56	OIL SEAL	1	1	1			
9	61L–45378–00	NIPPLE, HOSE	1	1	1			
10	93606–12019	PIN, DOWEL	2	2	2			
11	90387–06M60	COLLAR	1	1	1			
12	90119–069UD	BOLT, WITH WASHER	1	1	1			YMUS
13	90465–11829	CLAMP	1	1	1			YMUS
14	66V–R1381–01	COVER	1	1	1			YMUS
15	90119–089UL	BOLT, WITH WASHER	3	3	3			YMUS
16	GD0–U7249–00–05	SHIM (T=0.5)	1	1	1			UR, YMUS
	GD0–U7249–00–10	SHIM (T=1.0)	1	1	1			UR, YMUS
17	F0D–U883E–00	JOINT, PIPE	1	1	1			YMUS
18	90149–069UA	SCREW	3	3	3			YMUS
19	F0D–U883B–01	PIPE, 1	1	1	1			YMUS
20	90601–152U3	BAND, HOSE 52	2	2	2			YMUS

FIG. 13 JET UNIT 3

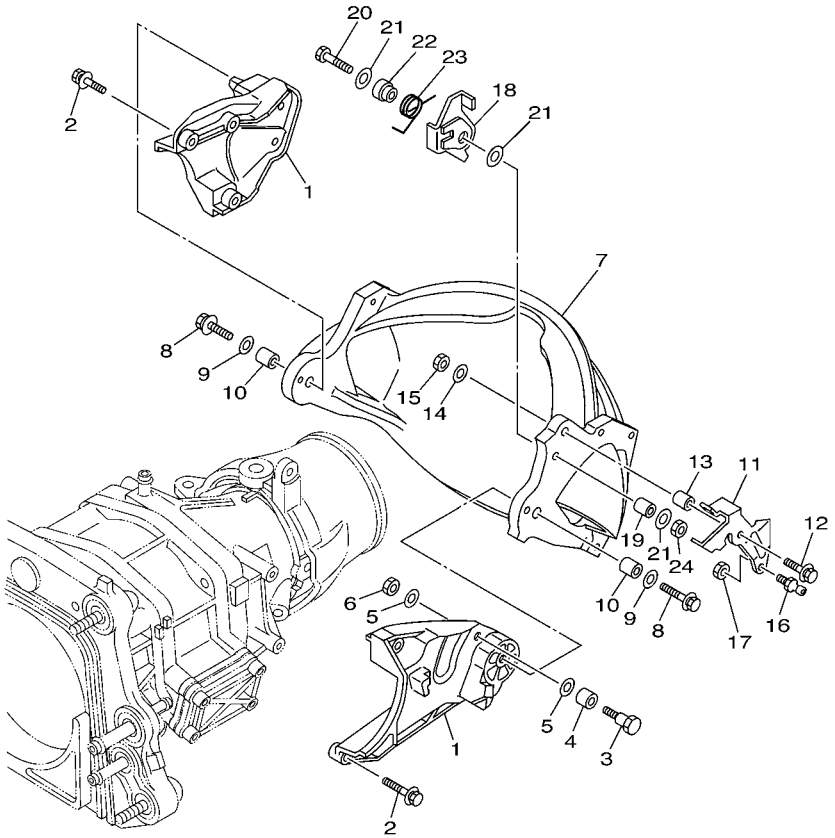

F1F4100-B110

REF. NO.	PART NO.	DESCRIPTION	U49	GENE	JPN			REMARKS
1	66V–51341–00–94	BRACKET 1	2	2	2			
2	90119–069UD	BOLT, WITH WASHER	6	6	6			YMUS
3	90109–08879	BOLT	1	1	1			YMUS
4	90387–10M09	COLLAR	1	1	1			
5	9299R–08600	WASHER	2	2	2			YMUS
6	9538R–08600	NUT	1	1	1			YMUS
7	66V–51314–11	GATE, REVERSE	1	1	1			
8	90119–089UF	BOLT, WITH WASHER	2	2	2			YMUS
9	90201–088T2	WASHER, PLATE	2	2	2			
10	90387–08M30	COLLAR	2	2	2			
11	66V–44121–00	LEVER, SHIFT ROD	1	1	1			
12	90119–069UB	BOLT, WITH WASHER	1	1	1			YMUS
13	90387–06M74	COLLAR	1	1	1			
14	90201–068T1	WASHER, PLATE	1	1	1			YMUS
15	9538R–06600	NUT	1	1	1			YMUS
16	66V–U146E–00	STUD, JOINT BALL	1	1	1			YMUS
17	9538R–06600	NUT	1	1	1			YMUS
18	66V–44125–00	LEVER, SHIFT ROD	1	1	1			
19	90387–06M74	COLLAR	1	1	1			
20	90101–06806	BOLT	1	1	1			YMUS
21	90201–068T1	WASHER, PLATE	3	3	3			YMUS
22	90387–06M84	COLLAR	1	1	1			
23	90508–14M43	SPRING, TORSION	1	1	1			
24	9538R–06600	NUT	1	1	1			YMUS

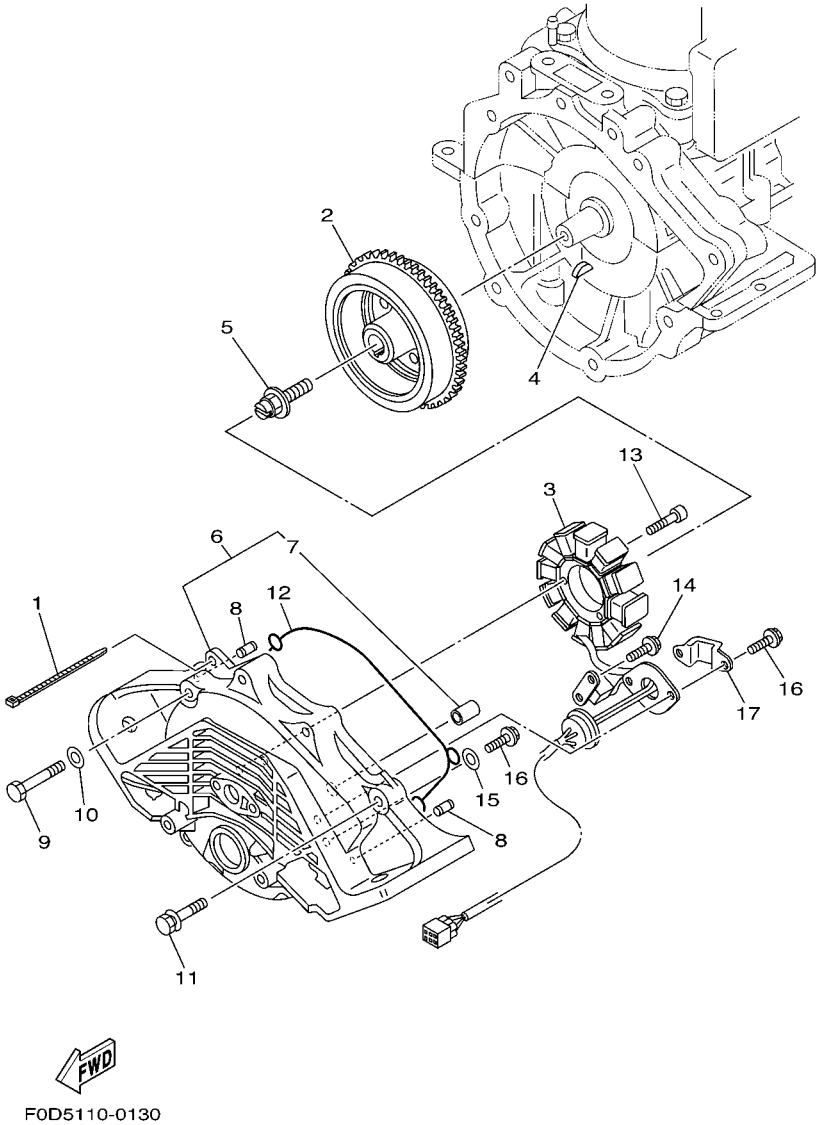

FIG. 14 GENERATOR

REF. NO.	PART NO.	DESCRIPTION	U49	GENE	JPN			REMARKS
1	90465–11M10	CLAMP	1	1	1			
2	66V–85550–00	ROTOR ASSY	1	1	1			
3	66V–85510–00	STATOR ASSY	1	1	1			
4	90280–05013	KEY, WOODRUFF	1	1	1			
5	90109–10M72	BOLT	1	1	1			
6	68N–81337–00–94	COVER, FLYWHEEL	1	1	1			
7	90380–12M29	.BUSH, SOLID	1	1	1			
8	93608–16M16	PIN, DOWEL	2	2	2			
9	97013–10055	BOLT	7	7	7			
10	92903–10600	WASHER, PLATE	7	7	7			
11	97513–10545	BOLT, WITH WASHER	1	1	1			
12	66V–81168–10	O-RING	1	1	1			
13	91317–06030	BOLT	3	3	3			
14	97513–05514	BOLT, WITH WASHER	2	2	2			
15	90201–06068	WASHER, PLATE	1	1	1			
16	91318–06014	BOLT	3	3	3			
17	66V–81328–00	CLAMP	1	1	1			

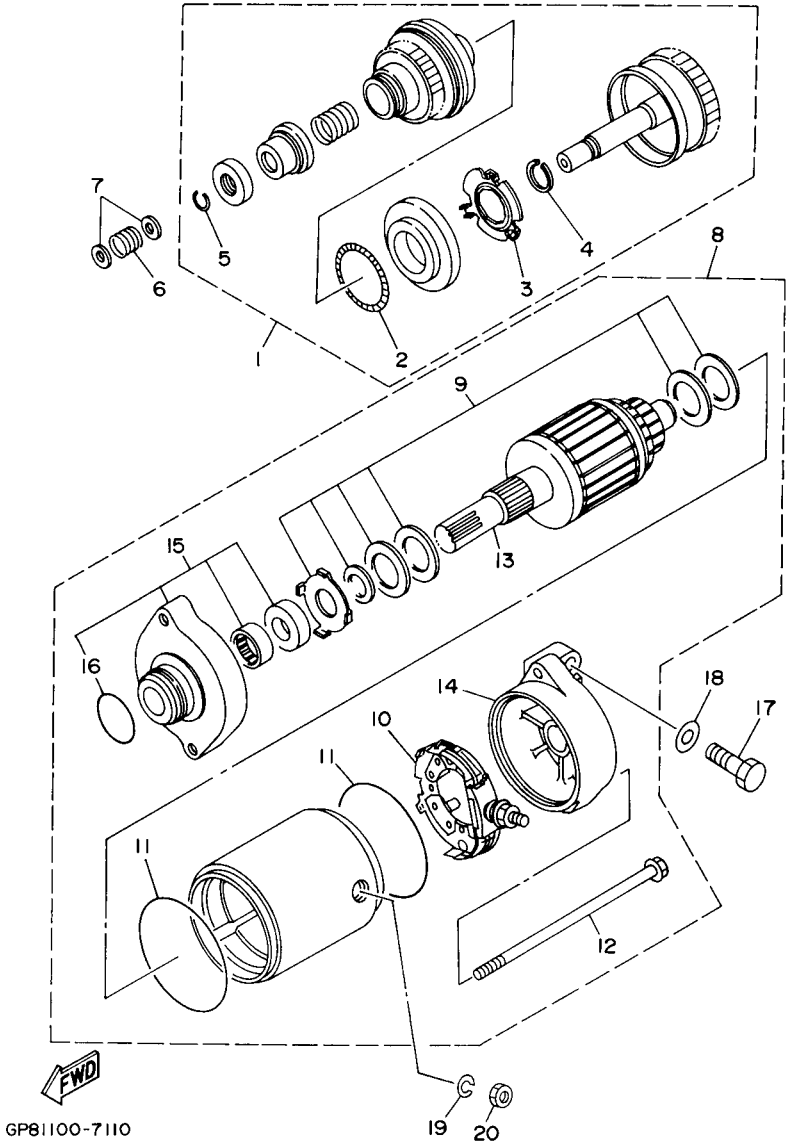

FIG. 15 STARTING MOTOR

REF. NO.	PART NO.	DESCRIPTION	U49	GENE	JPN			REMARKS
1	6M6–8183E–01	IDLE GEAR COMP.	1	1	1			
2	6M6–81866–00	.WEIGHT SPRING	1	1	1			
3	6M6–81865–00	.WEIGHT HOLDER	1	1	1			
4	93440–25M08	.CIRCLIP	1	1	1			
5	93450–18M06	.CIRCLIP	1	1	1			
6	90501–14M73	SPRING, COMPRESSION	1	1	1			
7	92903–06600	WASHER, PLATE	2	2	2			
8	63M–81800–00	STARTING MOTOR ASSY	1	1	1			
9	3AJ–81809–00	.WASHER KIT	1	1	1			
10	6M6–81840–10	.BRUSH HOLDER ASSY	1	1	1			
11	11H–81844–00	.GASKET	2	2	2			
12	6M6–81826–00	.BOLT	2	2	2			
13	6M6–81850–00	.ARMATURE ASSY	1	1	1			
14	63M–81830–00	.REAR BRACKET ASSY	1	1	1			
15	6M6–81830–00	.FRONT BRACKET ASSY	1	1	1			
16	1FK–81847–00	..O-RING	1	1	1			
17	97013–08025	BOLT	2	2	2			
18	92903–08600	WASHER, PLATE	2	2	2			
19	92990–06100	WASHER, SPRING	1	1	1			
20	95380–06700	NUT	1	1	1			

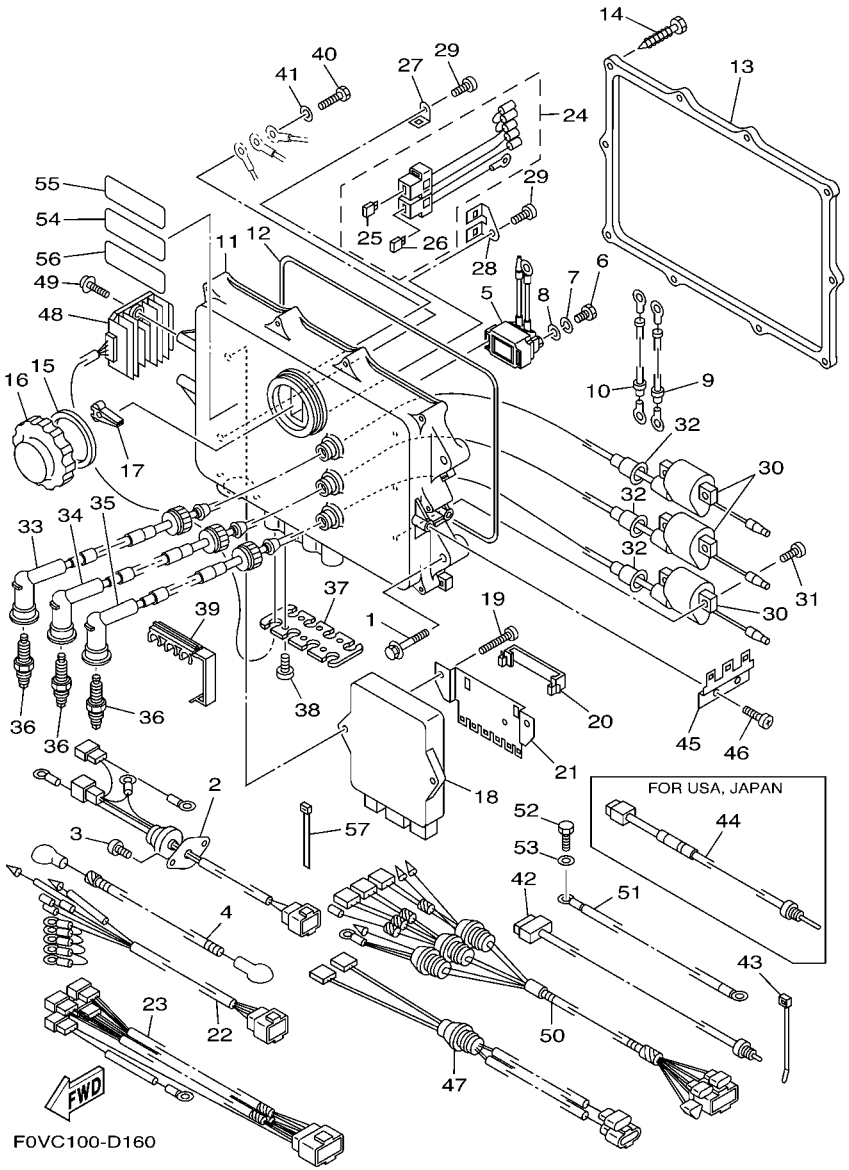

FIG. 16 ELECTRICAL 1

REF. NO.	PART NO.	DESCRIPTION	U49	GENE	JPN			REMARKS
1	90119–089UR	BOLT, WITH WASHER	4	4	4			YMUS
2	66V–81315–00	LEAD WIRE ASSY	1	1	1			
3	97780–60425	SCREW, TAPPING	2	2	2			
4	66V–82117–00	WIRE, LEAD	1	1	1			
5	68N–81940–00	STARTER RELAY ASSY	1	1	1			
6	97095–06010	BOLT	2	2	2			
7	92995–06100	WASHER, SPRING	2	2	2			
8	92995–06600	WASHER	2	2	2			
9	66V–82117–10	WIRE, LEAD	1	1	1			
10	66V–82117–20	WIRE, LEAD	1	1	1			
11	66V–8552A–00	HOUSING	1	1	1			
12	66V–81921–00	GASKET, TERMINAL	1	1	1			
13	66V–8552E–00	COVER, CASE	1	1	1			
14	97780–60430	SCREW, TAPPING	10	10	10			
15	66V–81844–00	GASKET	1	1	1			
16	66V–8132W–00	CAP	1	1	1			
17	67F–2812A–00	PULLER, FUSE	1	1	1			
18	66V–85540–00	C.D.I. UNIT ASSY	1		1			FOR U49, JPN
	67B–85540–00	C.D.I. UNIT ASSY		1				FOR GENE
19	97780–60530	SCREW, TAPPING	2	2	2			
20	66V–83919–00	CLAMP, HARNESS	1	1	1			
21	66V–83955–00	BRACKET 1	1	1	1			
22	66V–85515–00	LEAD WIRE ASSY	1	1	1			
23	66V–83553–00	WIRE, LEAD	1		1			FOR U49, JPN
	67B–83553–00	WIRE, LEAD		1				FOR GENE
24	66V–82150–00	FUSE HOLDER ASSY	1	1	1			
25	67F–82151–00	.FUSE (20A)	1	1	1			

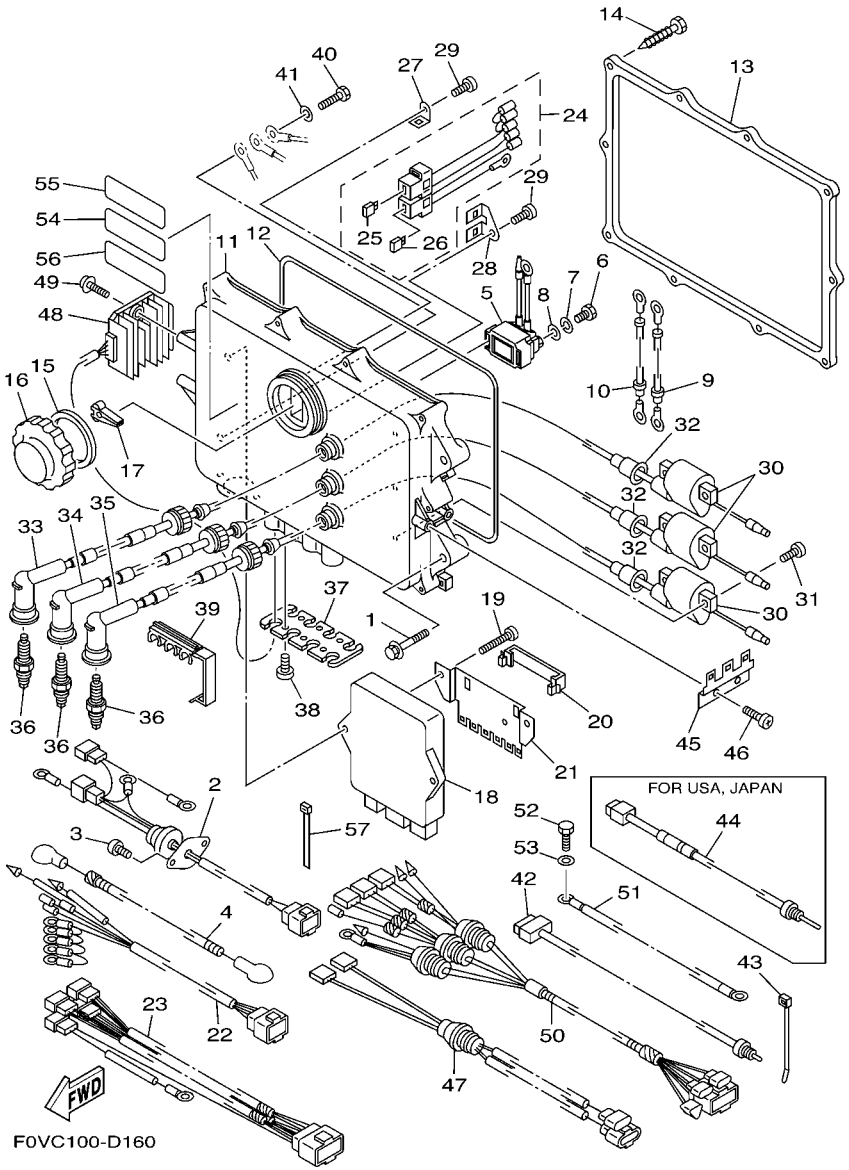

FIG. 16 ELECTRICAL 1

REF. NO.	PART NO.	DESCRIPTION	U49	GENE	JPN			REMARKS
26	66V–82151–00	.FUSE (10A-BL)	1	1	1			
27	66V–82171–00	STAY, FUSE BOX	1	1	1			
28	66V–82153–00	STAY, FUSE HOLDER	1	1	1			
29	97780–60516	SCREW, TAPPING	2	2	2			
30	66V–85570–00	IGNITION COIL ASSY	3	3	3			
31	97780–60525	SCREW, TAPPING	6	6	6			
32	66V–82355–00	GROMMET	3	3	3			
33	66V–82340–01	HIGH TENSION CORD ASSY 1	1	1	1			
34	66V–82340–11	HIGH TENSION CORD ASSY 1	1	1	1			
35	66V–82340–21	HIGH TENSION CORD ASSY 1	1	1	1			
36	94702–00396	PLUG, SPARK (NGK BR8ES-11)	3	3				FOR U49, GENE
	94709–00396	PLUG, SPARK (NGK BR8ES-11)			3			FOR JPN
37	66V–85525–00	COVER	1	1	1			
38	97780–60425	SCREW, TAPPING	6	6	6			
39	65U–81317–10	CLAMP, CORD	2	2	2			
40	97095–06012	BOLT	3	3	3			
41	92995–06600	WASHER	3	3	3			
42	66V–85790–10	THERMOSENSOR ASSY	1	1	1			
43	90465–11M10	CLAMP	1	1	1			
44	66V–85881–00	SENSOR, EXT, TEMP.	1		1			FOR U49, JPN
45	66V–85542–00	BRACKET	1	1	1			
46	97780–60516	SCREW, TAPPING	2	2	2			
47	66V–82509–00	WIRE, SUB LEAD	1		1			FOR U49, JPN
	67B–82509–00	WIRE, SUB LEAD		1				FOR GENE
48	66V–81960–00	RECTIFIER & REGULATOR ASSY	1	1	1			
49	97780–60425	SCREW, TAPPING	2	2	2			
50	66V–82553–10	EXTENSION, WIRE LEAD	1	1	1			

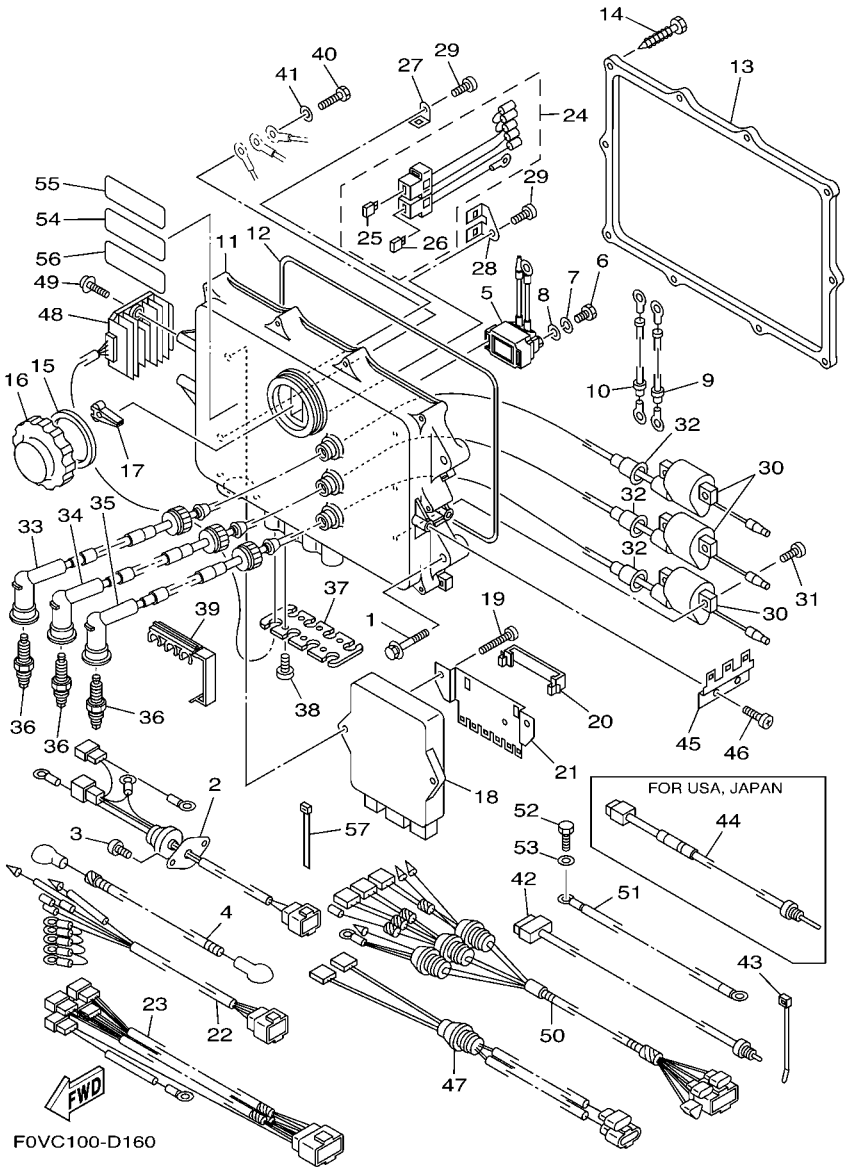

FIG. 16 ELECTRICAL 1

REF. NO.	PART NO.	DESCRIPTION	U49	GENE	JPN			REMARKS
51	66V–82127–00	WIRE, LEAD 2	1	1	1			
52	97013–06016	BOLT	1	1	1			
53	92903–06600	WASHER, PLATE	1	1	1			
54	63N–83623–00	MARK 3			1			FOR JPN
	6R7–83623–40	MARK 3	1	1				FOR U49, GENE
55	6R7–83623–50	MARK 3		1				FOR GENE
56	60E–83627–00	LABEL, CAUTION 7	1					FOR U49
57	90465–13M36	CLAMP	5	5	5			

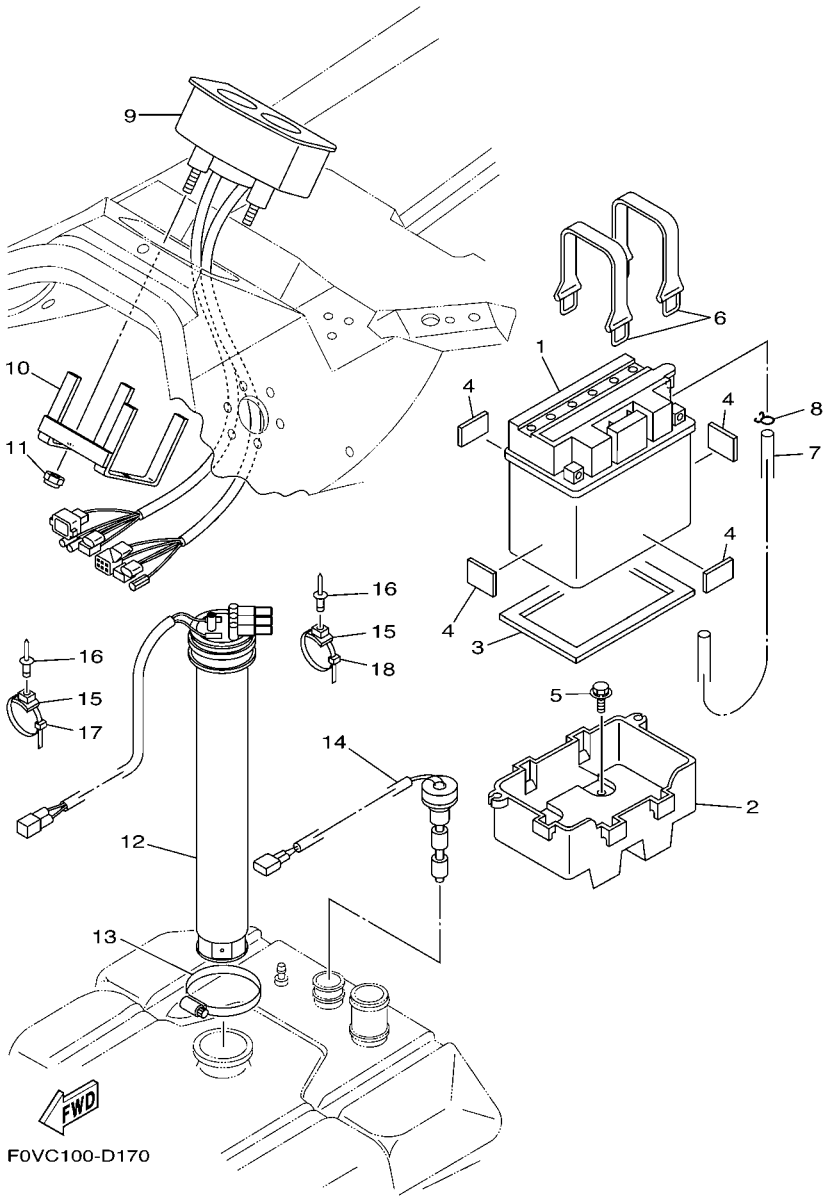

FIG. 17 ELECTRICAL 2

REF. NO.	PART NO.	DESCRIPTION	U49	GENE	JPN			REMARKS
1	EU0–82110–09	BATTERY ASSY (YB16CL-B)	1	1	1			YUASA
2	GP7–U8211–00	CASE, BATTERY	1	1	1			YMUS
3	F0X–U8221–00	PAD, BATTERY	1	1	1			YMUS
4	EU0–U8221–30	PAD, BATTERY 2	4	4	4			YMUS
5	90119–069US	BOLT, WITH WASHER	4	4	4			YMUS
6	EU0–U821D–00	BAND,BATTERY 1	2	2	2			YMUS
7	F0D–U785G–10	HOSE, AIR VENT	1	1	1			YMUS
8	90467–089U1	CLIP	1	1	1			YMUS
9	F0D–6820A–01	METER ASSY	1					FOR U49
	F0D–6820A–11	METER ASSY		1				FOR GENE
	F0D–6820A–21	METER ASSY			1			FOR JPN
10	F0D–68238–10	BRACKET, METER	1	1	1			
11	9572R–05300	NUT, FLANGE	2	2	2			YMUS
12	F0V–U824B–03	SENDER, FUEL	1	1	1			YMUS
13	90601–162U5	BAND, HOSE 62	1	1	1			YMUS
14	F0D–U824C–20	SENDER, OIL	1	1	1			YMUS
15	90600–917U4	CLAMP COMP.	8	8	8			YMUS
16	90267–48802	RIVET, BLIND	7	7	7			YMUS
17	90464–32801	CLAMP	5	5	5			YMUS
18	90601–20009	BAND	1	1	1			TAITON

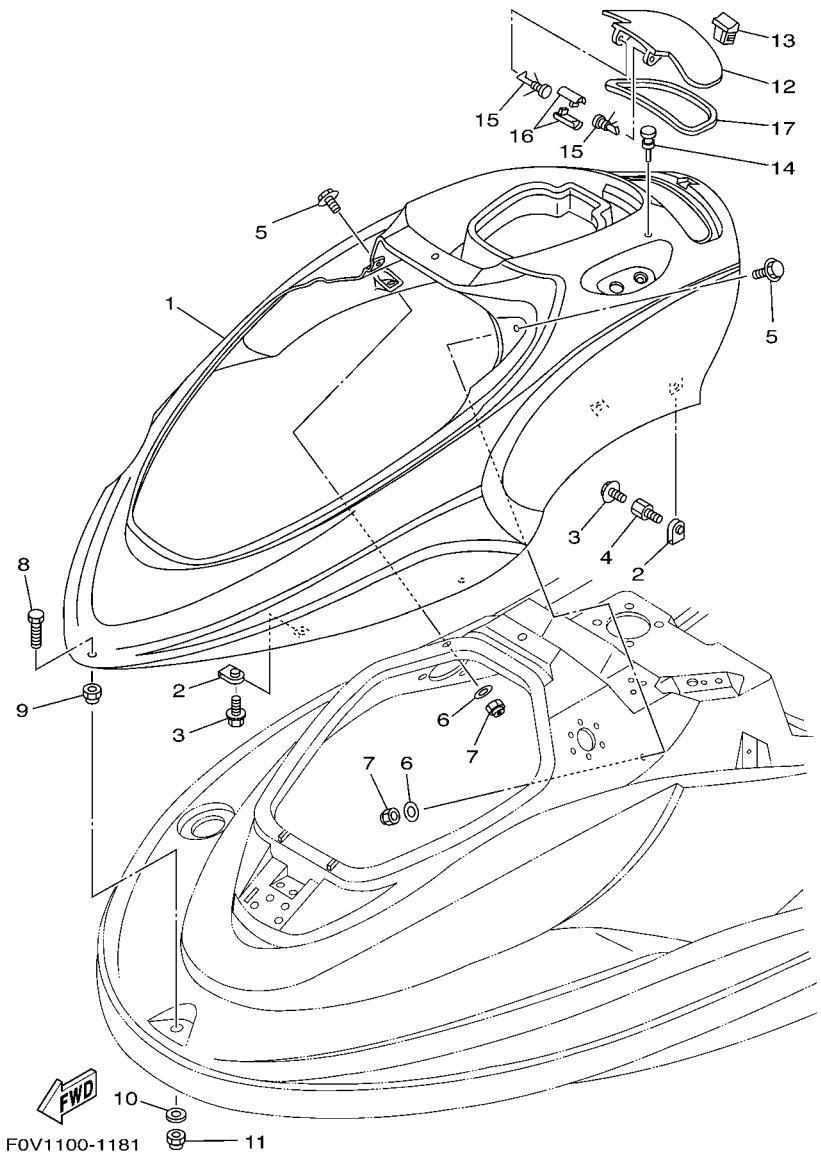

FIG. 18 ENGINE HATCH 1

REF. NO.	PART NO.	DESCRIPTION	U49	GENE	JPN			REMARKS
1	F0V–U516N–10–P0	COVER, ENGINE HATCH	1	1	1			DPBMP, YMUS
2	90183–06902	NUT, SPRING	8	8	8			
3	90119–06858	BOLT, WITH WASHER	8	8	8			YMUS
4	F0V–U7772–00	NUT, JOINT	2	2	2			YMUS
5	90119–06803	BOLT, WITH WASHER	2	2	2			YMUS
6	9299R–06200	WASHER	2	2	2			YMUS
7	9572R–06300	NUT, NYLON	2	2	2			YMUS
8	9708R–06030	BOLT	1	1	1			YMUS
9	9538R–06700	NUT	1	1	1			YMUS
10	9299R–06200	WASHER	1	1	1			YMUS
11	9572R–06300	NUT, NYLON	1	1	1			YMUS
12	F0V–U517H–20	LID HATCH	1	1	1			YB, YMUS
13	F0D–62875–00	LOCK	1	1	1			
14	90605–502U2	PLUG	1	1	1			YMUS
15	F0D–6517R–00	PIN, HINGE	2	2	2			
16	F0D–6517T–00	JOINT, HINGE	2	2	2			
17	F0D–U519D–01	PACKING CASE	1	1	1			YMUS

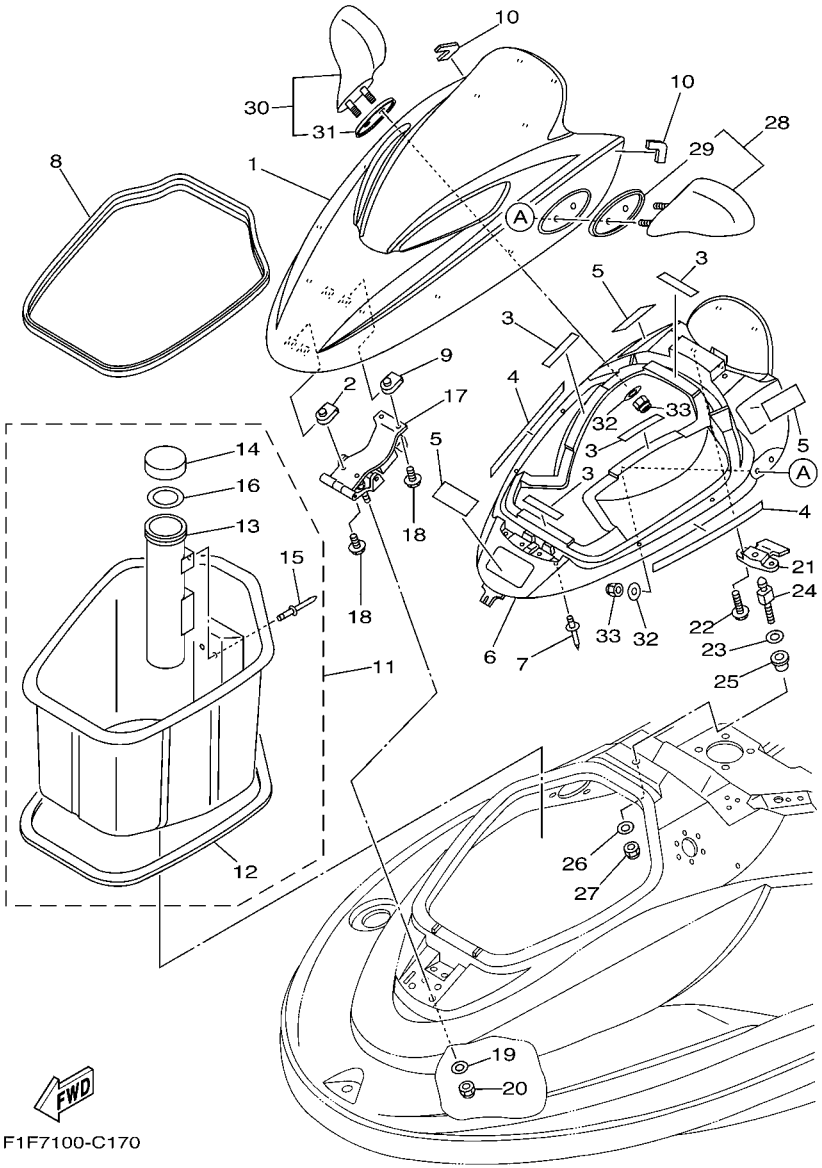

FIG. 19 ENGINE HATCH 2

REF. NO.	PART NO.	DESCRIPTION	U49	GENE	JPN			REMARKS
1	F0V–U517B–B0–P0	LID, ENGINE ROOM	1	1	1			DPBMP, YMUS
2	90183–06902	NUT, SPRING	2	2	2			
3	F0V–U3635–00	TAPE, FITTING	4	4	4			YMUS
4	F0V–U3635–10	TAPE, FITTING	2	2	2			YMUS
5	F0V–U3635–20	TAPE, FITTING	3	3	3			YMUS
6	F0V–U2103–11	VENTILATOR COVER COMP., 2	1	1	1			
7	90267–48809	RIVET, BLIND	10	10	10			YMUS
8	F0V–U266B–00	PACKING 3	1	1	1			YMUS
9	90183–06902	NUT, SPRING	2	2	2			
10	F0V–U517M–00	PAD,HATCH 1	2	2	2			YMUS
11	F0D–U475A–00	BOWLOCKER ASSY	1	1	1			YMUS
12	GJ3–U266C–31	.PACKING 4	1	1	1			YMUS
13	GP7–U5983–00	.BOX, FIRE EXTINGUISHER	1	1	1			YMUS
14	EW2–U5912–01	.CAP, CASE	1	1	1			YMUS
15	90267–489UP	.RIVET, BLIND	3	3	3			YMUS
16	EW2–U5913–01	.PACKING, CASE	1	1	1			YMUS
17	F0V–6515A–01	HINGE ASSY.	1	1	1			
18	90119–069UB	BOLT, WITH WASHER	4	4	4			YMUS
19	90201–06802	WASHER, PLATE	4	4	4			YMUS
20	9572R–06300	NUT, NYLON	4	4	4			YMUS
21	F0D–6517C–04	LOCK, LID	1	1	1			
22	90119–069UH	BOLT, WITH WASHER	2	2	2			YMUS
23	F0V–U515E–00	DAMPER 2	1	1	1			YMUS
24	F0D–63774–01	PIN	1	1	1			
25	90387–08802	COLLAR	1	1	1			YMUS
26	9299R–08200	WASHER	1	1	1			YMUS
27	9572R–08300	NUT, FLANGE	1	1	1			YMUS

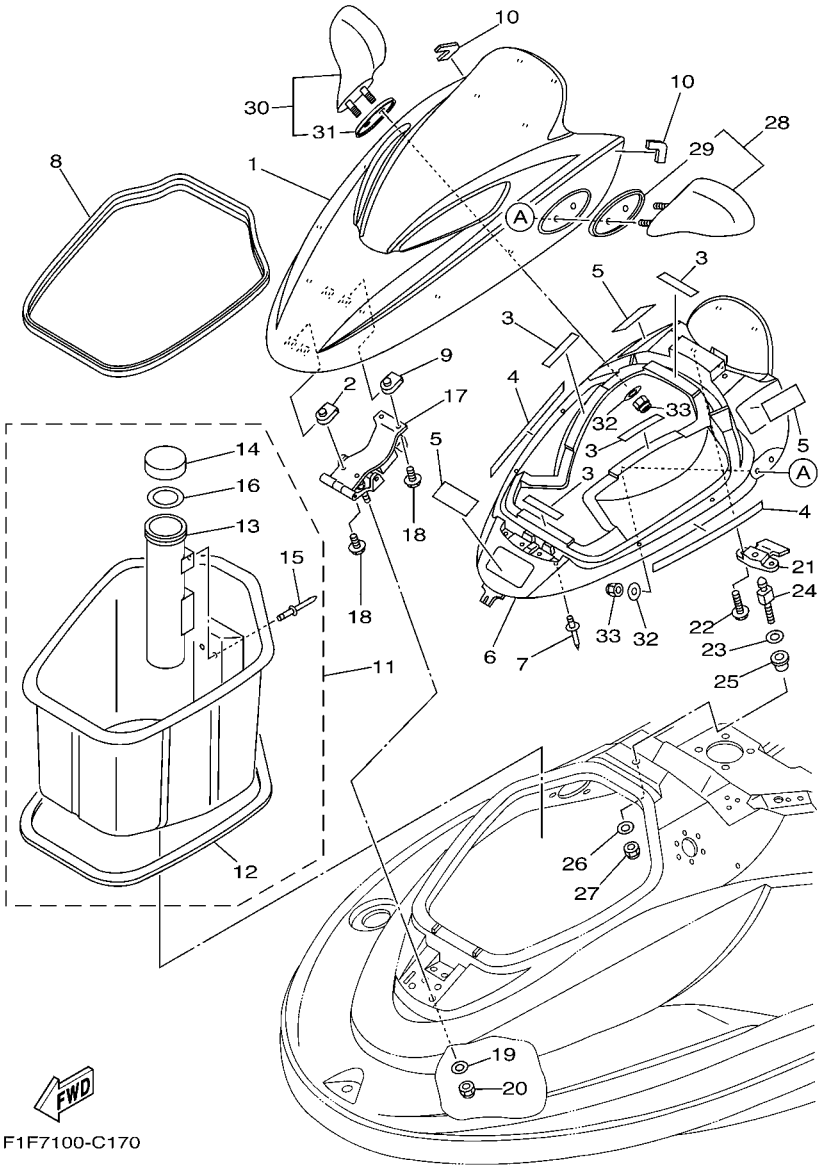

FIG. 19 ENGINE HATCH 2

REF. NO.	PART NO.	DESCRIPTION	U49	GENE	JPN			REMARKS
28	F0V–U596B–04	MIRROR LH	1	1	1			YB, YMUS
29	F0V–U471E–00	.SPACER 1	1	1	1			YMUS
30	F0V–U596C–04	MIRROR RH	1	1	1			YB, YMUS
31	F0V–U471F–00	.SPACER 2	1	1	1			YMUS
32	9299R–08200	WASHER	4	4	4			YMUS
33	9572R–08300	NUT, FLANGE	4	4	4			YMUS

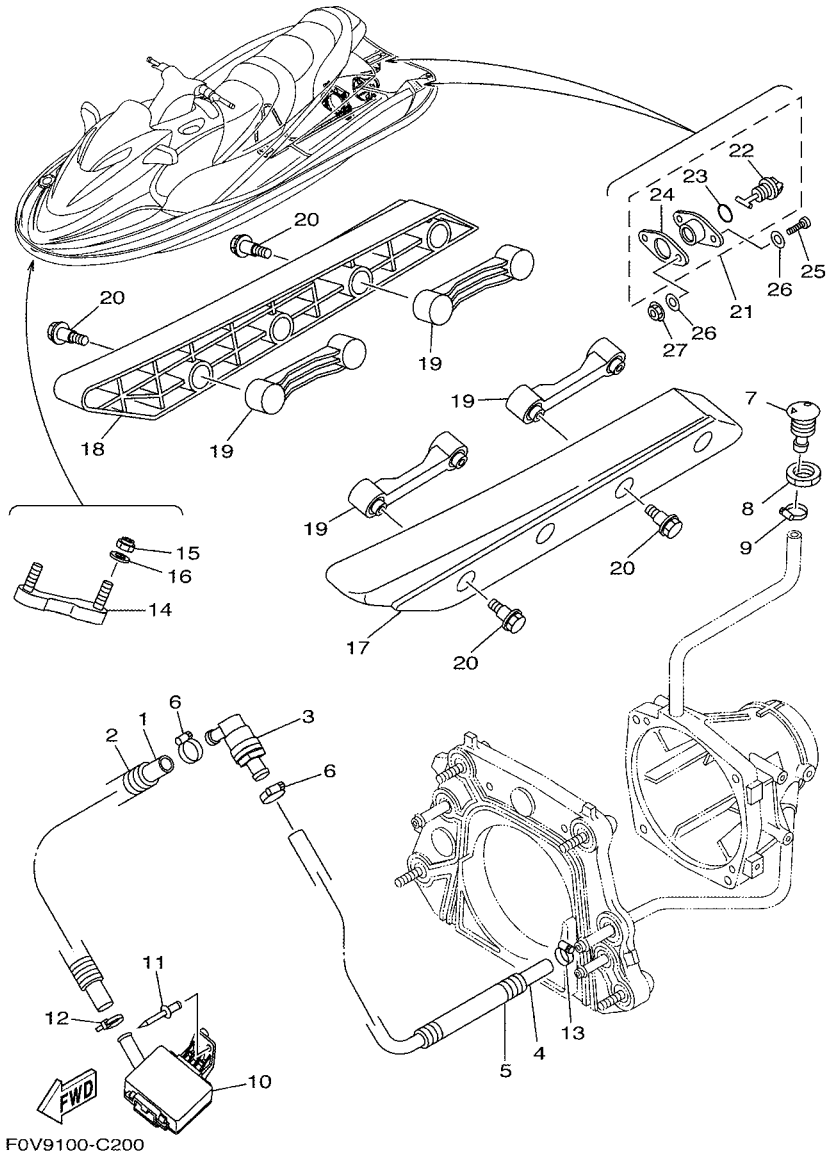

FIG. 20 HULL & DECK

REF. NO.	PART NO.	DESCRIPTION	U49	GENE	JPN			REMARKS
1	90445–198C0	HOSE (L1000)	1	1	1			YMUS
2	90446–27M73	HOSE (L700)	1	1	1			
3	68N–5112T–00	JOINT, HOSE	1	1	1			
4	90445–198B9	HOSE (L650)	1	1	1			YMUS
5	90446–27M55	TUBE (L400)	1	1	1			
6	90601–118UF	BAND, HOSE 18	2	2	2			YMUS
7	FN8–6269B–00	SPOUT	1	1	1			
8	EU0–61652–00	NUT	1	1	1			
9	90601–118UF	BAND, HOSE 18	1	1	1			YMUS
10	F1B–U761D–02	STRAINER, BILGE	1	1	1			YMUS
11	90267–489U8	RIVET, BLIND	1	1	1			YMUS
12	90465–11829	CLAMP	1	1	1			YMUS
13	90601–118UF	BAND, HOSE 18	1	1	1			YMUS
14	F0D–61624–01	BOWEYE 1	1	1	1			
15	9572R–08300	NUT, FLANGE	2	2	2			YMUS
16	9299R–08200	WASHER	2	2	2			YMUS
17	F0D–U883N–20	STABILIZER LH	1	1	1			YB, YMUS
18	F0D–U883P–20	STABILIZER RH	1	1	1			YB, YMUS
19	F1F–U883T–01	BRACKET,STABILIZER	4	4	4			YMUS
20	F0V–U2624–10	BOLT	8	8	8			YMUS
21	EU0–62280–00	DRAIN PLUG ASSY	2	2	2			
22	EU0–62282–00	.PLUG, DRAIN	1	1	1			
23	EU0–62283–00	.O-RING	1	1	1			
24	EU0–62285–01	.PACKING DRAIN (EU0)	1	1	1			
25	9788R–05025	SCREW, PAN HEAD	4	4	4			YMUS
26	9299R–05200	WASHER	8	8	8			YMUS
27	9572R–05300	NUT, FLANGE	4	4	4			YMUS

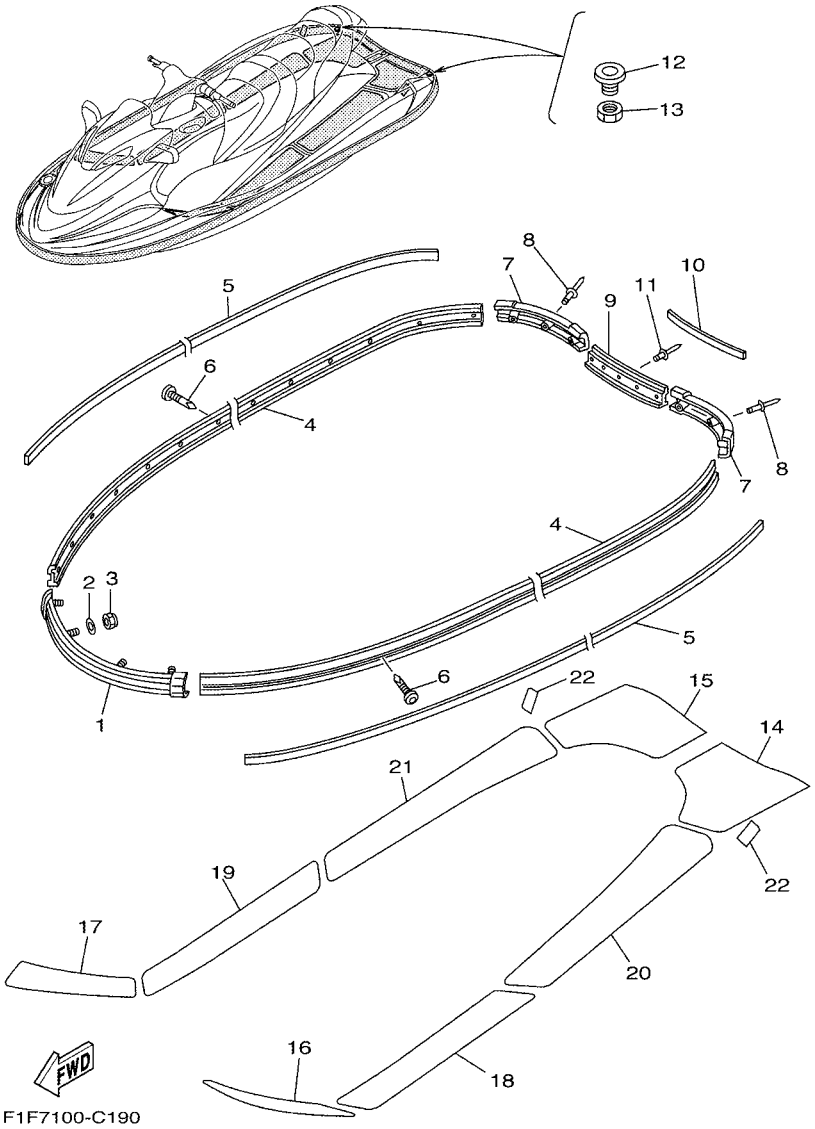

FIG. 21 GUNWALE & MAT

REF. NO.	PART NO.	DESCRIPTION	U49	GENE	JPN			REMARKS
1	GP7–U2501–20	BOW GUNWALE COMP.	1	1	1			YB, YMUS
2	9299R–06200	WASHER	4	4	4			YMUS
3	9572R–06300	NUT, NYLON	4	4	4			YMUS
4	F0D–U2512–00	GUNWALE, SIDE	2	2	2			YB, YMUS
5	F1F–U2519–01	INNER,GUNWALE	2	2	2			BL, YMUS
6	90169–059U1	SCREW,TAPPING	32	32	32			YMUS
7	F0D–U251D–00	GUNWALE, STERN 1	2	2	2			YB, YMUS
8	90267–47801	RIVET, BLIND	6	6	6			YMUS
9	F0D–U252C–00	COVER, GUNWALE 1	1	1	1			YB, YMUS
10	F0V–U252D–00	COVER, GUNWALE 2	1	1	1			YB, YMUS
11	90267–489US	RIVET, BLIND	4	4	4			YMUS
12	GH1–61651–01	ROPE HOLE	2	2	2			
13	EU0–61652–00	NUT	2	2	2			
14	F0V–U358F–03	MAT, UPPER LH	1	1	1			BL, YMUS
15	F0V–U358G–03	MAT, UPPER RH	1	1	1			BL, YMUS
16	F0P–U351H–00	MAT, STEP 1	1	1	1			BL, YMUS
17	F0P–U351J–00	MAT, STEP 2	1	1	1			BL, YMUS
18	F0V–U351K–00	MAT, STEP 3	1	1	1			BL, YMUS
19	F0V–U351M–00	MAT, STEP 4	1	1	1			BL, YMUS
20	F0V–U351N–00	MAT, STEP 5	1	1	1			BL, YMUS
21	F0V–U351P–00	MAT, STEP 6	1	1	1			BL, YMUS
22	F0D–U351R–00	MAT, STEP 7	2	2	2			BL, YMUS

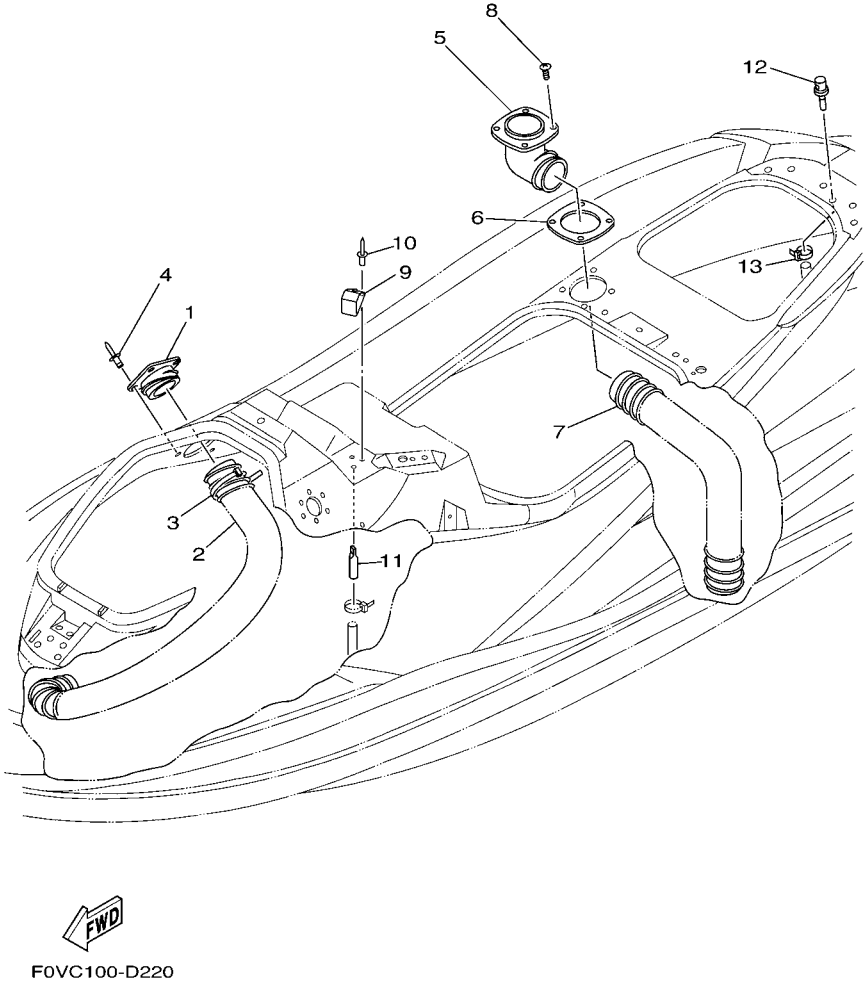

FIG. 22 VENTILATION

REF. NO.	PART NO.	DESCRIPTION	U49	GENE	JPN			REMARKS
1	F0D–62127–00	BASE, AIR INTAKE	1	1	1			
2	F0D–U213F–05	HOSE, VENTILATOR 1	1	1	1			YMUS
3	90464–99804	CLAMP	1	1	1			YMUS
4	90267–489UE	RIVET, BLIND	4	4	4			YMUS
5	F0D–62139–00	VENTILATOR, OUTLET	1	1	1			
6	F0V–U2118–00	SEAL, AIRINTAKE 2	1	1	1			YMUS
7	F0D–U213G–04	HOSE, VENTILATOR 2	1	1	1			YMUS
8	90149–05962	SCREW	4	4	4			
9	GP7–62159–01	SOCKET, VENTILATION	1	1	1			
10	90267–48802	RIVET, BLIND	2	2	2			YMUS
11	EW2–62149–00	PIPE, VENTILATION 1	1	1	1			
12	GJ3–6215F–00	NIPPLE	1	1	1			
13	90465–11829	CLAMP	1	1	1			YMUS

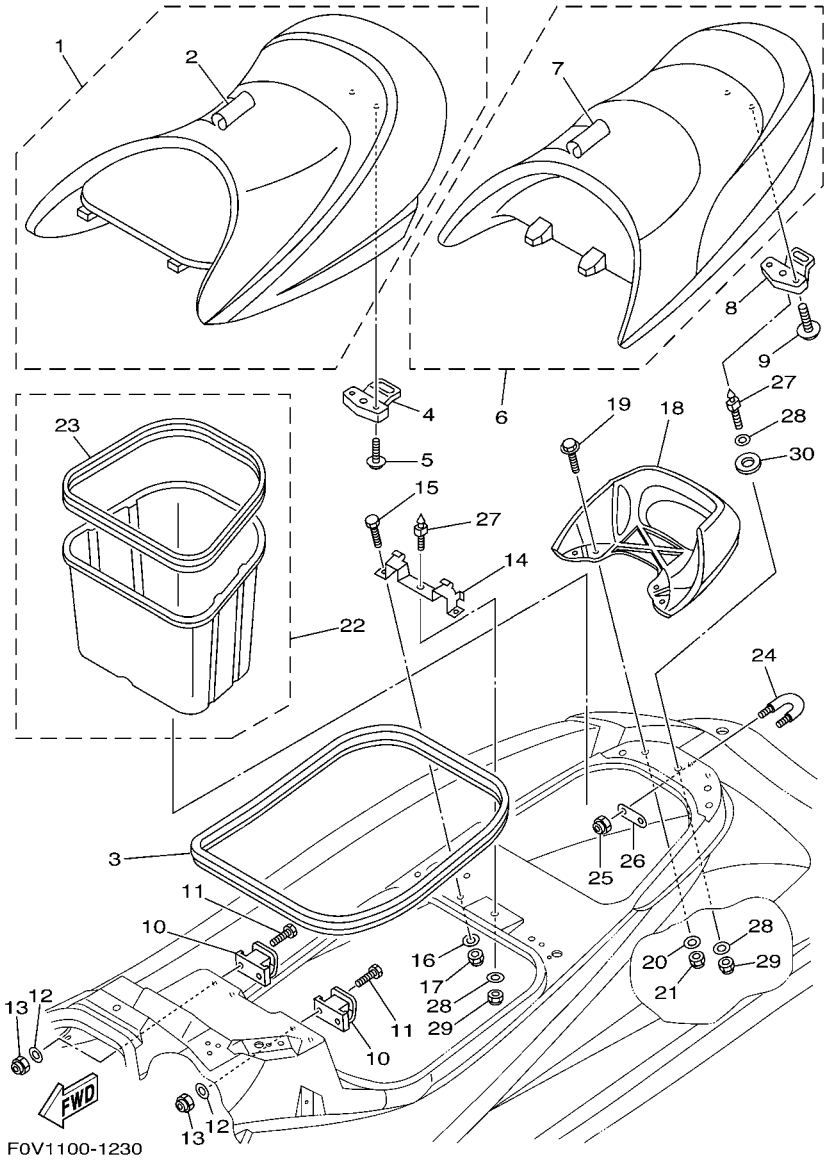

FIG. 23 SEAT & UNDER LOCKER

REF. NO.	PART NO.	DESCRIPTION	U49	GENE	JPN			REMARKS
1	F0V–U371A–60	DOUBLE SEAT ASSY	1	1	1			YMUS
2	F0V–U371B–60	.COVER, SEAT 1	1	1	1			YMUS
3	F0D–U266C–00	PACKING 4	1	1	1			YMUS
4	F0D–63850–01	SEAT LOCK ASSY	1	1	1			
5	90119–069UP	BOLT, WITH WASHER	2	2	2			YMUS
6	F0V–U372A–60	SINGLE SEAT ASSY	1	1	1			YMUS
7	F0V–U372B–60	.COVER, SEAT	1	1	1			YMUS
8	F0D–63850–01	SEAT LOCK ASSY	1	1	1			
9	90119–069UP	BOLT, WITH WASHER	2	2	2			YMUS
10	F0V–U378C–00	STAY, SEAT 1	2	2	2			YMUS
11	90101–069U0	BOLT	4	4	4			YMUS
12	9299R–06200	WASHER	4	4	4			YMUS
13	9572R–06300	NUT, NYLON	4	4	4			YMUS
14	F0D–6378D–01	STAY,SEAT 2	1	1	1			
15	97080–10025	BOLT	2	2	2			
16	9299R–10200	WASHER	2	2	2			YMUS
17	9572R–10300	NUT, FLANGE	2	2	2			YMUS
18	F0D–U271B–00	GRIP, HAND	1	1	1			YB, YMUS
19	90119–06820	BOLT, WITH WASHER	4	4	4			YMUS
20	9299R–06200	WASHER	4	4	4			YMUS
21	9572R–06300	NUT, NYLON	4	4	4			YMUS
22	F0D–U474A–00	UNDER LOCKER ASSY	1	1	1			YMUS
23	F0D–U266D–00	.PACKING 5	1	1	1			YMUS
24	GP7–61628–00	STERN EYE	1	1	1			
25	9572R–08300	NUT, FLANGE	2	2	2			YMUS
26	GP7–U4953–00	PLATE A	1	1	1			YMUS
27	GH1–U3774–00	PIN	2	2	2			YMUS

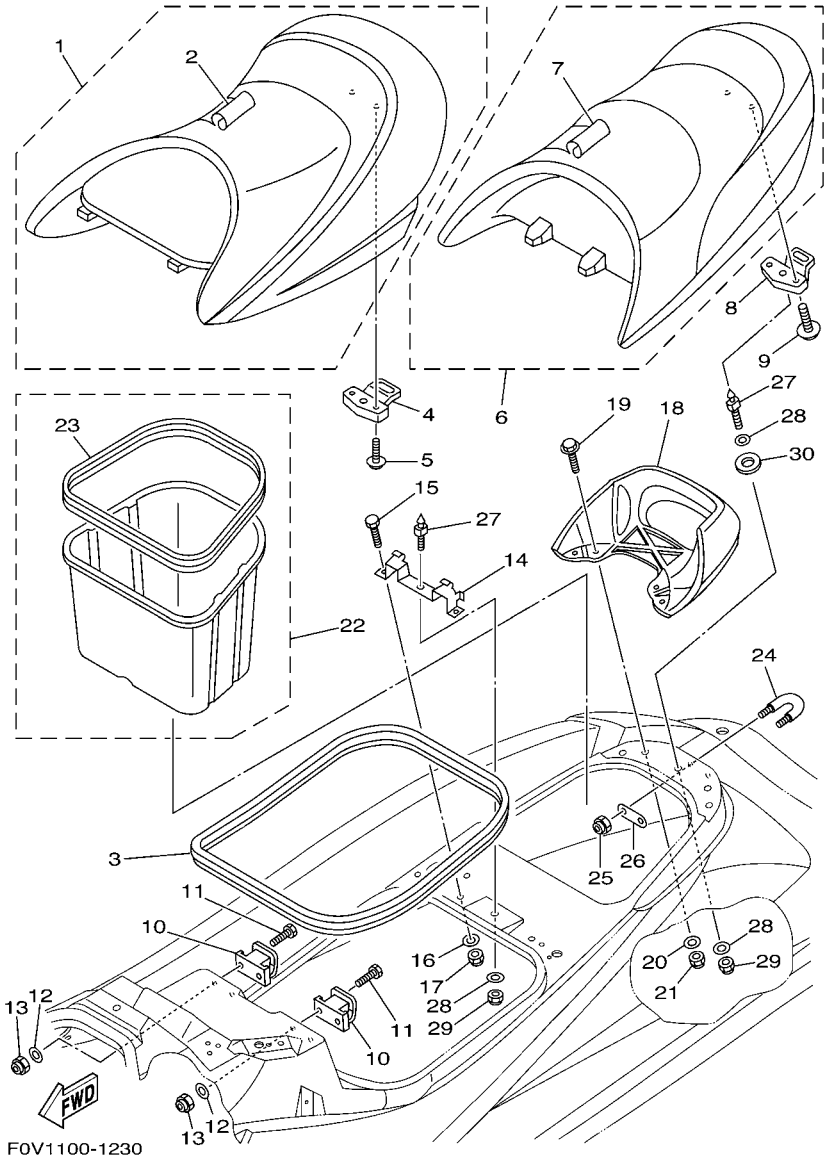

FIG. 23 SEAT & UNDER LOCKER

REF. NO.	PART NO.	DESCRIPTION	U49	GENE	JPN			REMARKS
28	9299R–10200	WASHER	3	3	3			YMUS
29	9572R–10300	NUT, FLANGE	2	2	2			YMUS
30	F0D–6376D–00	PLATE, DAMPER	1	1	1			

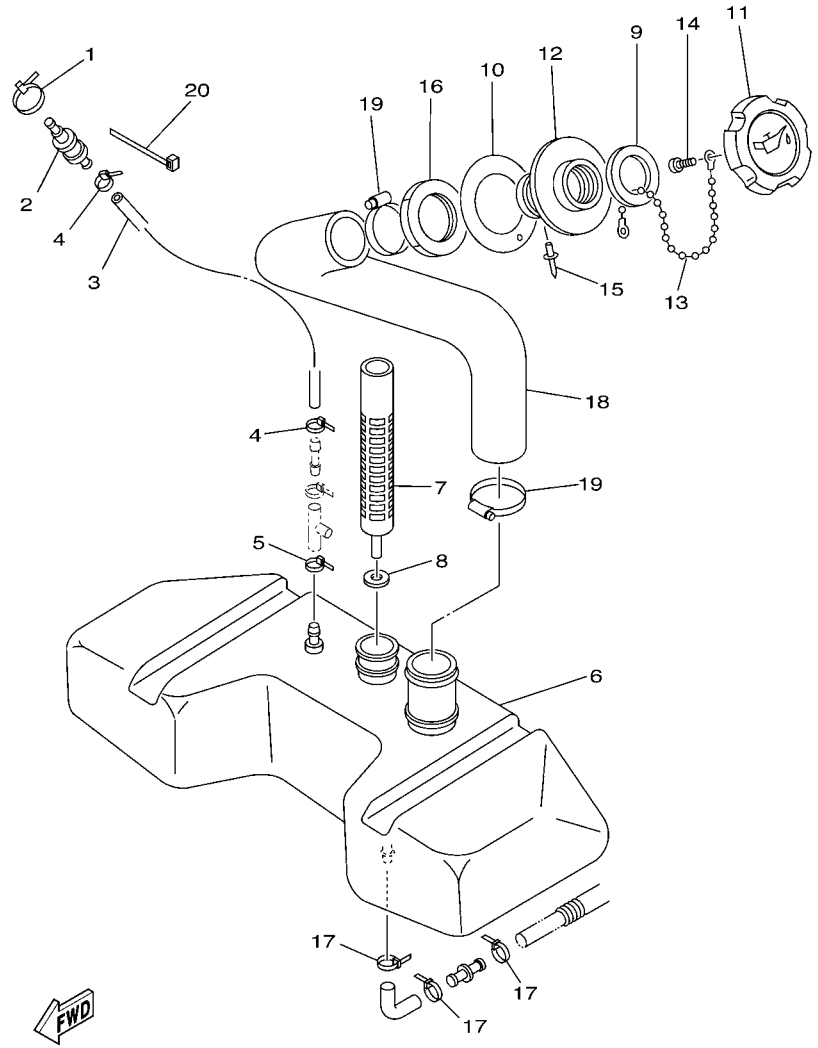

F0V1100-1240

FIG. 24 OIL TANK

REF. NO.	PART NO.	DESCRIPTION	U49	GENE	JPN			REMARKS
1	90464–32801	CLAMP	2	2	2			YMUS
2	FJ0–67766–00	ROLL OVER VALVE	1	1	1			
3	GJ3–U7856–20	HOSE, AIR VENT 3	1	1	1			YMUS
4	90465–11829	CLAMP	2	2	2			YMUS
5	90465–11829	CLAMP	1	1	1			YMUS
6	F0D–U775B–02	TANK, OIL	1	1	1			YMUS
7	F0D–6775C–01	FILTER	1	1	1			
8	F0D–6775E–01	PACKING	1	1	1			
9	GJ3–U778C–00	PACKING,OIL CAP	1	1	1			YMUS
10	F0X–U778E–00	PACKING,OIL FILLER	1	1	1			YMUS
11	GJ3–U778B–00	CAP,OIL FILLER	1	1	1			YMUS
12	F0X–U778D–00	SOCKET,OIL FILLER	1	1	1			YMUS
13	EU0–U7835–00	CHAIN BALL	1	1	1			YMUS
14	97780–04110	SCREW, TAPPING	1	1	1			
15	90267–40935	RIVET, BLIND	1	1	1			
16	F0X–U778H–00	NUT, OIL FILLER	1	1	1			YMUS
17	90465–11829	CLAMP	3	3	3			YMUS
18	F0D–U776C–10	HOSE,OIL FILLER	1	1	1			YMUS
19	90601–142U6	BAND, HOSE 42	2	2	2			YMUS
20	90464–32801	CLAMP	1	1	1			YMUS

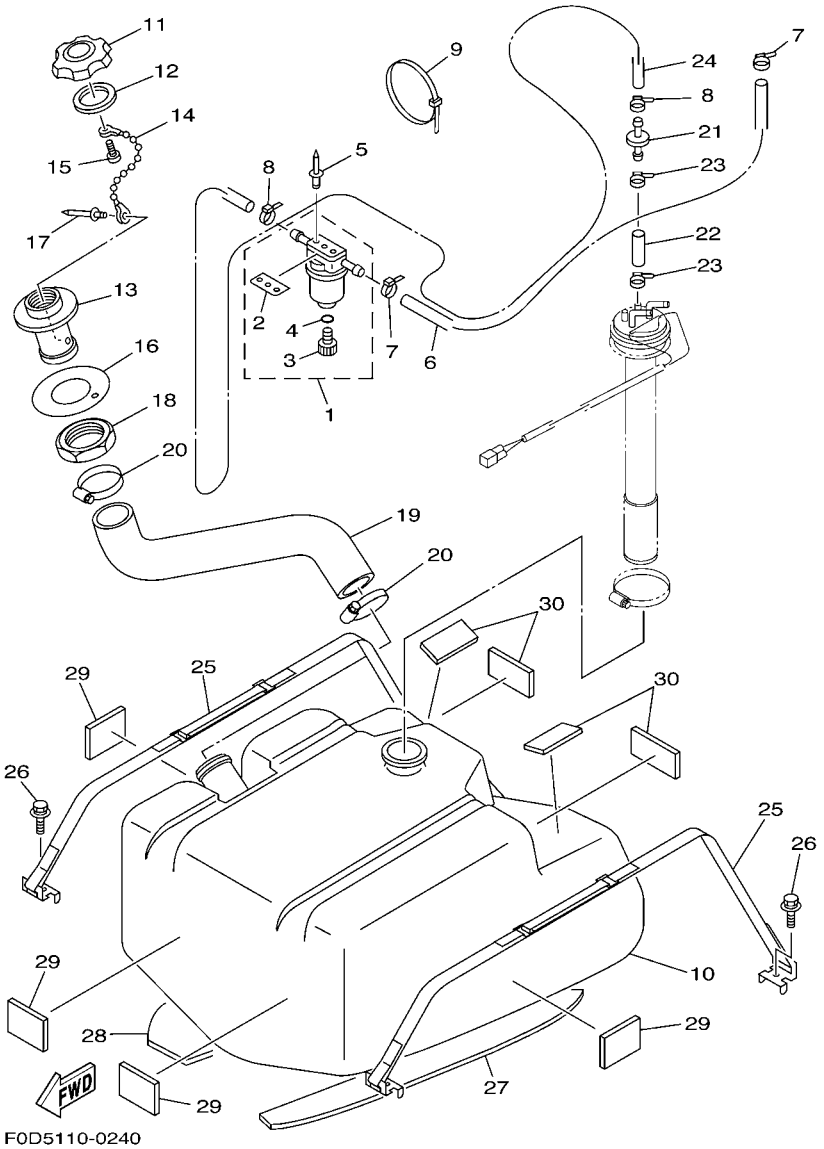

FIG. 25 FUEL TANK

REF. NO.	PART NO.	DESCRIPTION	U49	GENE	JPN			REMARKS
1	EW2–62140–00	FILTER, VENT ASSY	1	1	1			
2	EW2–62142–00	.PLATE, FILTER	1	1	1			
3	70R–24543–00	.PLUG, DRAIN	1	1	1			
4	70R–24489–00	.O-RING	1	1	1			
5	90267–489U2	RIVET, BLIND	2	2	2			YMUS
6	F0D–U785G–10	HOSE, AIR VENT	1	1	1			YMUS
7	90465–11829	CLAMP	2	2	2			YMUS
8	90465–11829	CLAMP	2	2	2			YMUS
9	90464–99804	CLAMP	1	1	1			YMUS
10	F0D–U7711–00	TANK, FUEL	1	1	1			YMUS
11	GP7–U7831–01	CAP, FUEL FILLER	1	1	1			PURW, YMUS
12	GP7–U7832–01	PACKING	1	1	1			YMUS
13	GP7–U7833–00	SOCKET	1	1	1			YMUS
14	GP7–U7835–00	CHAIN BALL	1	1	1			YMUS
15	90169–049U1	TAPPING SCREW	1	1	1			YMUS
16	GP7–U7834–00	PACKING FUEL FILLER	1	1	1			YMUS
17	90267–329UR	RIVET, BLIND	1	1	1			YMUS
18	GP7–U783F–00	NUT, FUEL FILLER	1	1	1			YMUS
19	F0D–U7844–10	HOSE	1	1	1			YMUS
20	90601–155U4	BAND, HOSE 55	2	2	2			YMUS
21	EU0–67767–31	CHECK VALVE	1	1	1			
22	GP7–U785H–00	HOSE, AIR VENT 3	1	1	1			YMUS
23	90465–11829	CLAMP	2	2	2			YMUS
24	F0D–U7856–10	HOSE, AIR VENT 3	1	1	1			YMUS
25	GH3–67743–01	BELT, TANK 1	2	2	2			
26	90119–089U7	BOLT, WITH WASHER	4	4	4			YMUS
27	F0D–U759B–00	MAT 1	1	1	1			YMUS

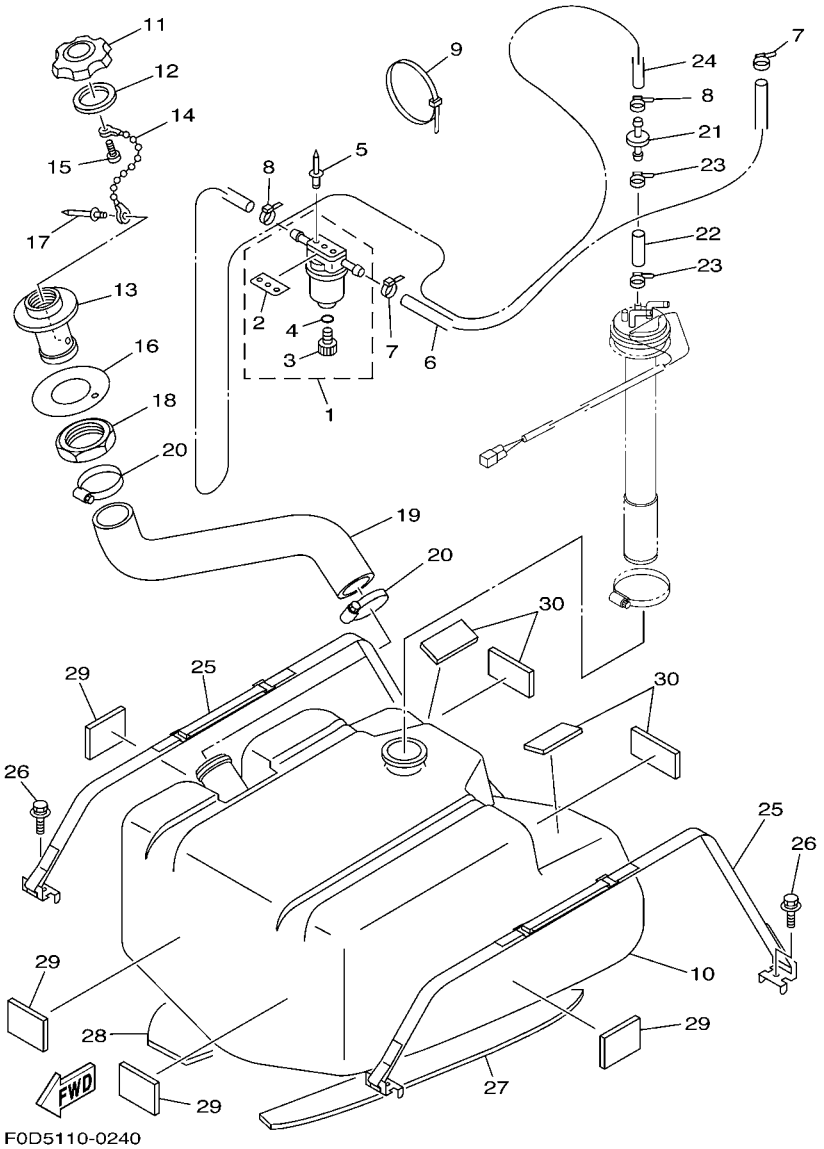

FIG. 25 FUEL TANK

REF. NO.	PART NO.	DESCRIPTION	U49	GENE	JPN			REMARKS
28	F0D–U759B–10	MAT 1	1	1	1			YMUS
29	F0D–U759C–00	MAT 2	4	4	4			YMUS
30	GJ1–U759C–00	MAT 2	4	4	4			YMUS

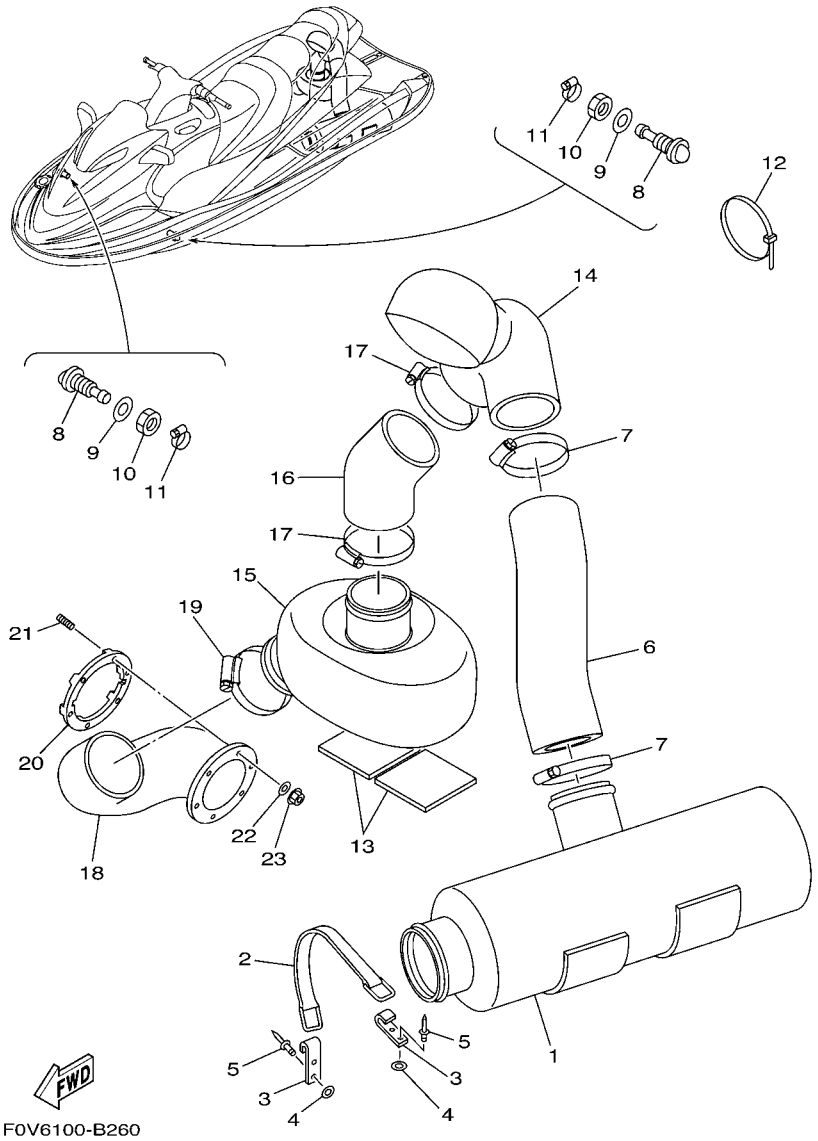

FIG. 26 EXHAUST 3

REF. NO.	PART NO.	DESCRIPTION	U49	GENE	JPN			REMARKS
1	F0D–67550–03	WATER LOCK COMP.	1	1	1			
2	GA7–6756E–00	BAND,WATER LOCK	1	1	1			
3	GA7–65772–00	HOOK A	2	2	2			
4	9299R–05200	WASHER	4	4	4			YMUS
5	90267–489U7	RIVET, BLIND	4	4	4			YMUS
6	F0D–6758B–00	HOSE,EXHAUST 1	1	1	1			
7	90601–195UD	BAND, HOSE 95	2	2	2			YMUS
8	F1B–6753B–00	PILOT, WATER	2	2	2			
9	F1B–67564–00	GASKET	2	2	2			
10	F0X–62733–00	NUT	2	2	2			
11	90601–118UF	BAND, HOSE 18	2	2	2			YMUS
12	90464–32801	CLAMP	1	1	1			YMUS
13	F0D–U7578–00	PACKING, HOSE 2	2	2	2			YMUS
14	F0D–6753D–01	RESONATOR, 2	1	1	1			
15	F0D–64261–02	TANK, WATER	1	1	1			
16	F0D–6758C–01	HOSE,EXHAUST2	1	1	1			
17	90601–195UD	BAND, HOSE 95	2	2	2			YMUS
18	F0V–U758D–00	HOSE,EXHAUST 3	1	1	1			YMUS
19	90601–195UD	BAND, HOSE 95	1	1	1			YMUS
20	F0V–U757B–00	PLATE	1	1	1			YMUS
21	90116–06802	BOLT, STUD	6	6	6			YMUS
22	9299R–06200	WASHER	6	6	6			YMUS
23	9572R–06300	NUT, NYLON	6	6	6			YMUS

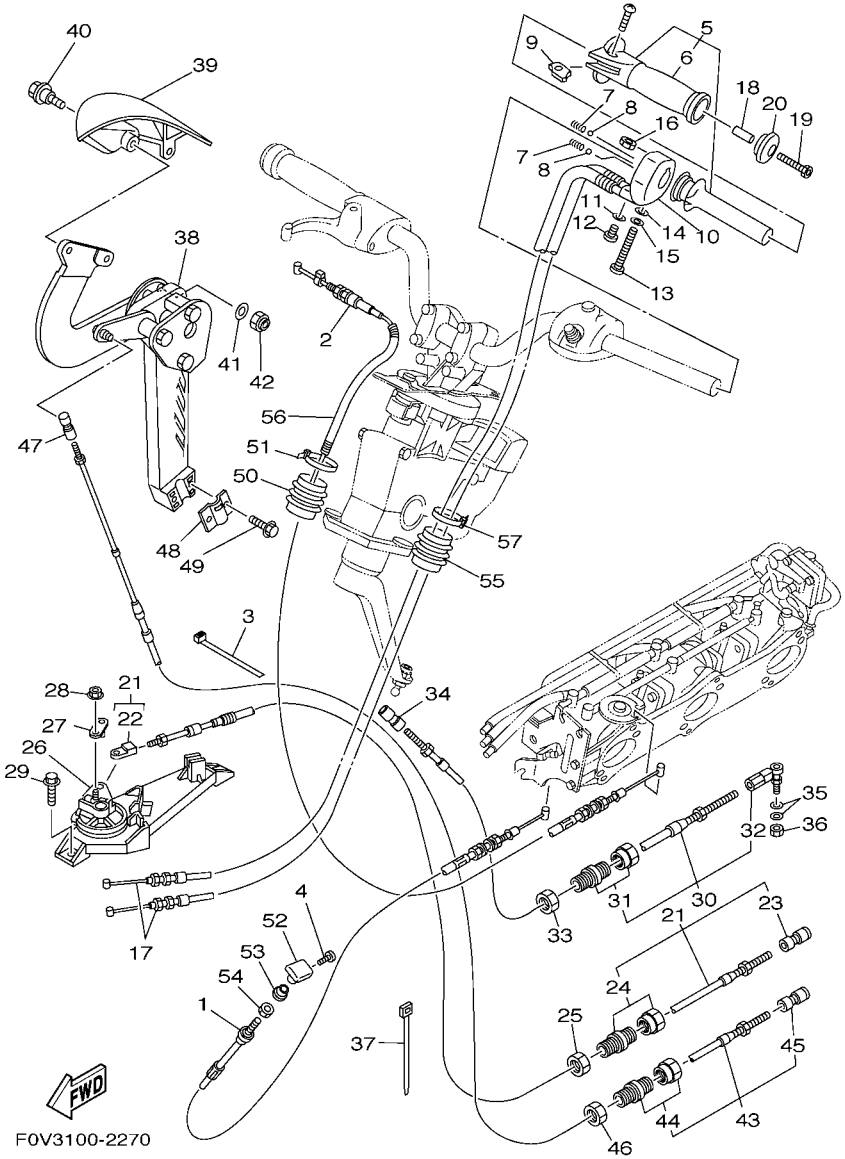

FIG. 27 CONTROL CABLE

REF. NO.	PART NO.	DESCRIPTION	U49	GENE	JPN			REMARKS
1	66V–67242–01	CABLE, CHOKE	1	1	1			
2	66V–67252–00	CABLE, THROTTLE	1	1	1			
3	90465–11M10	CLAMP	1	1	1			
4	90149–03M15	SCREW	1	1	1			
5	GP7–U157A–00	GRIP HANDLE ASSY.	1	1	1			YMUS
6	GP7–U155C–00	.GRIP,HANDLE	1	1	1			YMUS
7	GP7–U152P–00	SPRING	2	2	2			YMUS
8	GP7–U152R–00	BALL	2	2	2			YMUS
9	GP7–U151M–00	LEVER ASSY	1	1	1			YMUS
10	GP7–U152M–00	HOUSING ASSY	1	1	1			YMUS
11	92990–04600	WASHER, PLATE	1	1	1			
12	98980–04010	SCREW, BIND	1	1	1			
13	97880–06065	SCREW, PAN HEAD	1	1	1			
14	92990–06600	WASHER, PLATE	1	1	1			
15	9299R–06100	WASHER	1	1	1			YMUS
16	GH1–U143B–00	NUT,SPECIAL	1	1	1			YMUS
17	F0D–U153D–01	CABLE,NOZZLE CONTROL 2	2	2	2			YMUS
18	90387–05800	COLLAR	1	1	1			YMUS
19	90110–05908	BOLT, HEXAGON SOCKET HEAD	1	1	1			
20	GP7–U155F–00	GRIP, END	1	1	1			YMUS
21	F0D–U153E–10	CABLE,NOZZLE CONTROL 3	1	1	1			YMUS
22	GH1–U046C–00	.END,CABLE	1	1	1			YMUS
23	EU0–U1461–30	.SHAFT, JOINT BALL	1	1	1			YMUS
24	EU0–67267–10	.CONNECTOR, CABLE	1	1	1			
25	EU0–62241–30	NUT, DRAIN 1	1	1	1			
26	F0D–U153J–10	REMOCON,NOZZLE 2	1	1	1			YMUS
27	F0D–U152C–10	PIN	1	1	1			YMUS

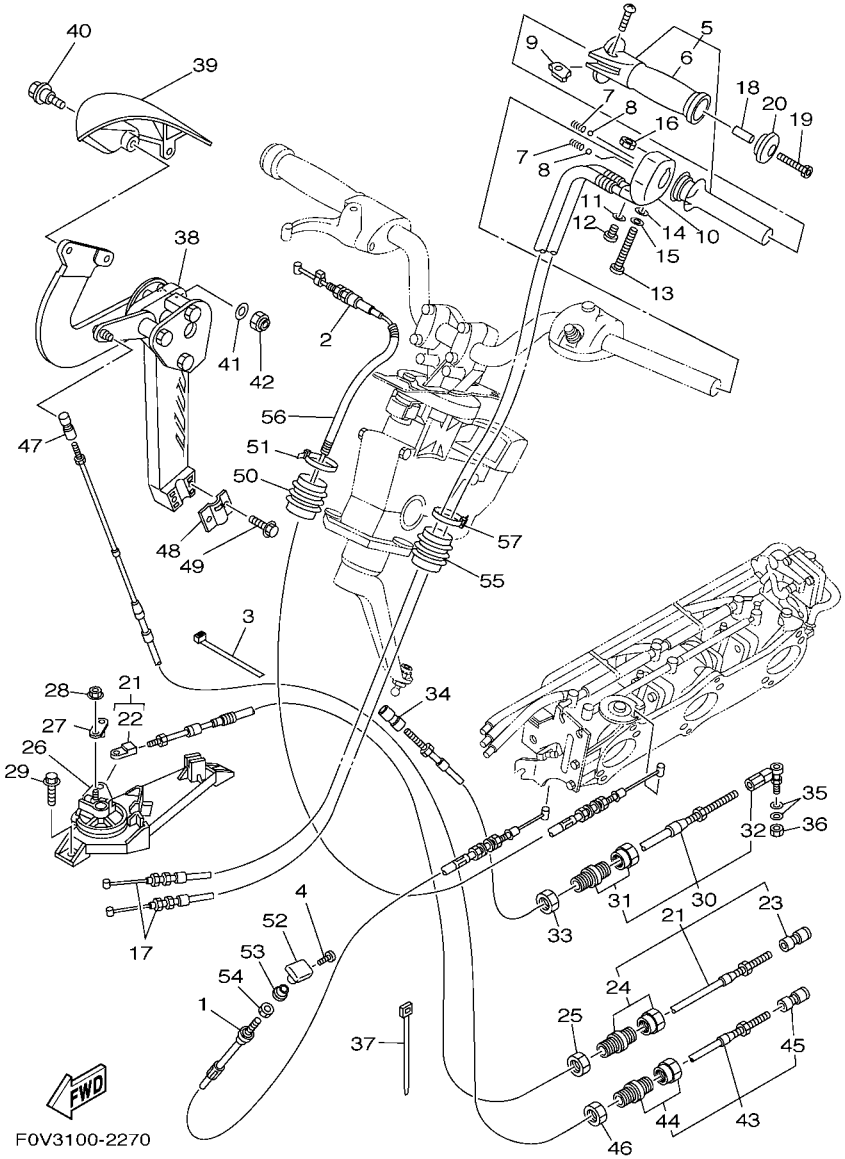

FIG. 27 CONTROL CABLE

REF. NO.	PART NO.	DESCRIPTION	U49	GENE	JPN			REMARKS
28	9572R–06300	NUT, NYLON	1	1	1			YMUS
29	90119–069UJ	BOLT, WITH WASHER	2	2	2			YMUS
30	F0D–U1481–10	CABLE, STEERING	1	1	1			YMUS
31	GK5–67267–10	.CONNECTOR, CABLE	1	1	1			
32	GP8–U1461–T0	.STUD, JOINT BALL	1	1	1			YMUS
33	EU0–62241–30	NUT, DRAIN 1	1	1	1			
34	GK5–U146F–00	SHAFT,JOINT BALL	1	1	1			YMUS
35	90201–06906	WASHER, PLATE	2	2	2			
36	9538R–06700	NUT	1	1	1			YMUS
37	90601–200U1	BAND	1	1	1			YMUS
38	F0V–6134A–00	REMOCON. LEVER ASSY.	1	1	1			
39	F0V–U2714–00	GRIP	1	1	1			YMUS
40	90109–06803	BOLT	2	2	2			YMUS
41	9299R–06200	WASHER	3	3	3			YMUS
42	9572R–06300	NUT, NYLON	3	3	3			YMUS
43	F0V–U149C–00	CABLE,REVERSE	1	1	1			YMUS
44	F0V–U7267–00	.CONNECTOR, CABLE	1	1	1			YMUS
45	F0V–U1461–00	.STUD, JOINT BALL	1	1	1			YMUS
46	EU0–62241–30	NUT, DRAIN 1	1	1	1			
47	EU0–U1461–30	SHAFT, JOINT BALL	1	1	1			YMUS
48	GH1–61468–01	STOPPER, CABLE	1	1	1			
49	90119–069UJ	BOLT, WITH WASHER	2	2	2			YMUS
50	F0D–6822E–00	GROMMET	1	1	1			
51	90601–200U1	BAND	1	1	1			YMUS
52	EW2–67243–00	KNOB	1	1	1			
53	F0N–6724E–00	NUT, COMPRESSION	1	1	1			
54	F0P–6724F–00	NUT	1	1	1			

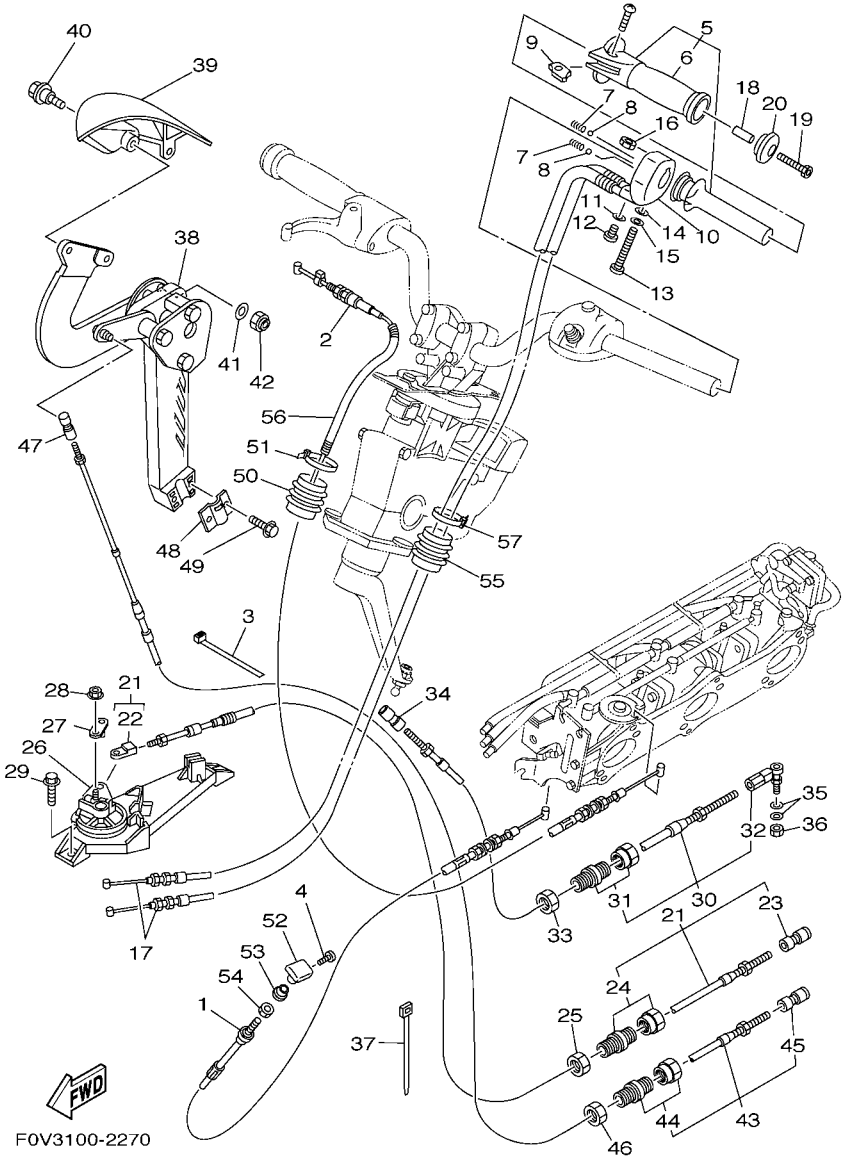

FIG. 27 CONTROL CABLE

REF. NO.	PART NO.	DESCRIPTION	U49	GENE	JPN			REMARKS
55	F0D–6822E–00	GROMMET	1	1	1			
56	F0D–6773E–00	TUBE,2	1	1	1			
57	90601–200U1	BAND	1	1	1			YMUS

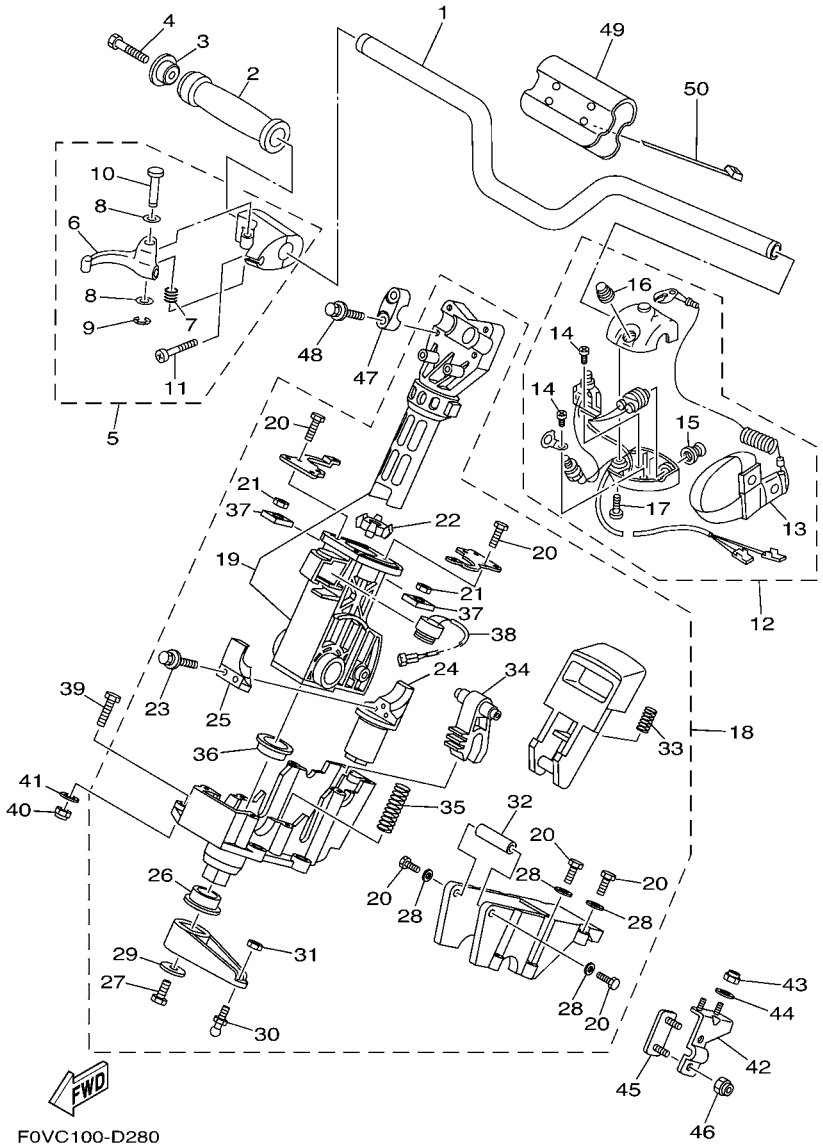

FIG. 28 STEERING 1

REF. NO.	PART NO.	DESCRIPTION	U49	GENE	JPN			REMARKS
1	F0D–U1552–00	HANDLE	1	1	1			YMUS
2	GP7–U155D–00	GRIP, HANDLE	1	1	1			YMUS
3	GP7–U155F–00	GRIP, END	1	1	1			YMUS
4	90110–05908	BOLT, HEXAGON SOCKET HEAD	1	1	1			
5	F0D–67250–03	THROTTLE LEVER ASSY	1	1	1			
6	F0D–67255–01	.LEVER, THROTTLE	1	1	1			
7	EW2–67256–00	.SPRING	1	1	1			
8	EW2–67258–01	.WASHER	2	2	2			
9	EW2–67259–01	.E-RING	1	1	1			
10	F0D–67257–00	.SHAFT	1	1	1			
11	98580–05025	.SCREW, PAN HEAD	2	2	2			
12	F0D–68310–01	SWITCH BOX ASSY	1	1	1			
13	EW2–68348–00	.LANYARD, STOP SWITCH	1	1	1			
14	97880–03008	.SCREW, PAN HEAD	2	2	2			
15	FK7–68312–02	.STOP BUTTON COMP	1	1	1			
16	FK7–68313–02	.START BUTTON COMP.	1	1	1			
17	97880–05025	.SCREW, PAN HEAD	2	2	2			
18	F0D–61400–11	STEERING MASTER ASSY	1	1	1			
19	F0D–67410–01	.SHAFT ASSY	1	1	1			
20	F0D–61355–00	.BOLT	12	12	12			
21	F0D–6151S–00	.NUT	4	4	4			
22	F0D–6152R–00	.BALL	1	1	1			
23	F0D–62624–00	.BOLT	2	2	2			
24	F0D–6152D–00	.SHAFT	1	1	1			
25	F0D–52543–00	.JOINT, UNIVERSAL	1	1	1			
26	F0D–6134M–00	.BUSH	1	1	1			
27	F0D–6491K–00	.BOLT, SPECIAL	1	1	1			

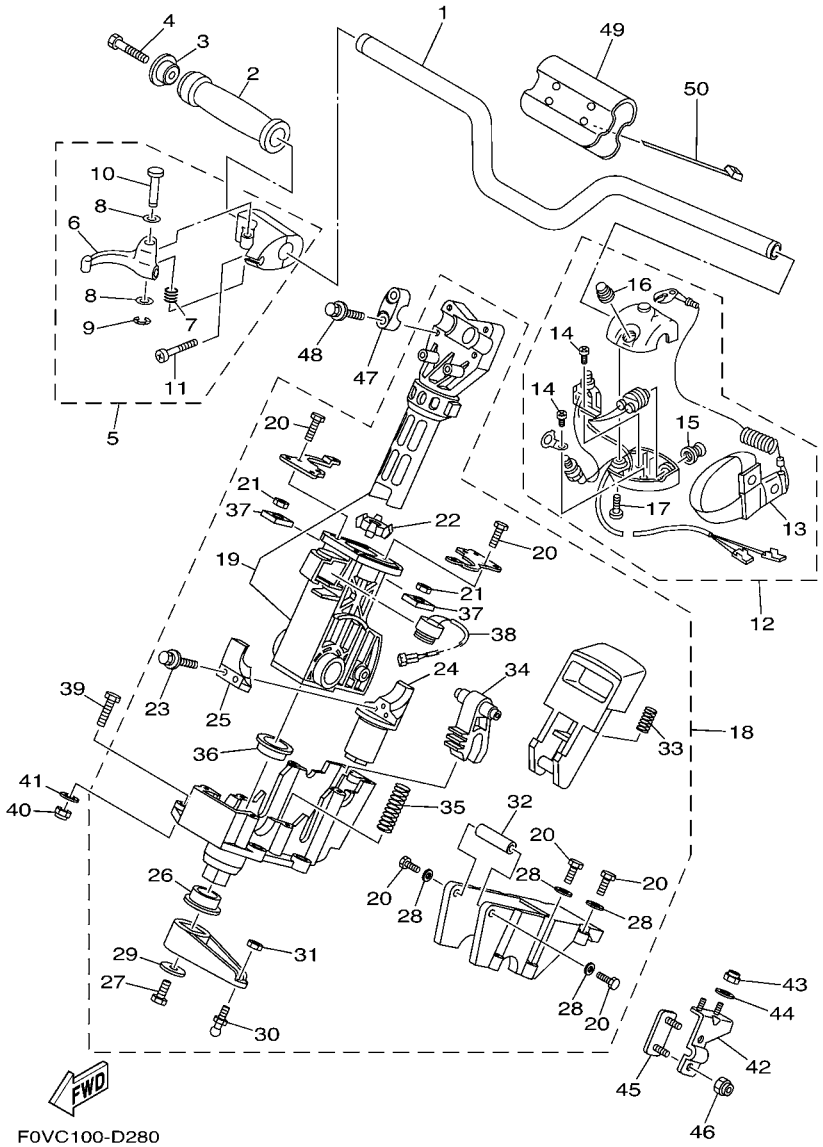

FIG. 28 STEERING 1

REF. NO.	PART NO.	DESCRIPTION	U49	GENE	JPN			REMARKS
28	F0D–6134E–00	.WASHER	8	8	8			
29	F0D–6135D–00	.WASHER	1	1	1			
30	EU0–61461–02	.STUD, JOINT BALL	1	1	1			
31	95720–06300	.NUT, SELF-LOCKING	1	1	1			
32	F0D–61574–00	.CONNECTOR	1	1	1			
33	F0D–61349–00	.SPRING	1	1	1			
34	F0D–61782–00	.LOCK 1	1	1	1			
35	F0D–6134K–00	.SPRING	1	1	1			
36	F0D–62814–00	.BUSH	1	1	1			
37	F0D–6724H–00	.HOLDER	4	4	4			
38	F1B–68341–00	.BUZZER	1	1	1			
39	97080–08030	BOLT	4	4	4			
40	9572R–08300	NUT, FLANGE	4	4	4			YMUS
41	90201–099U3	WASHER, PLATE	4	4	4			YMUS
42	F0D–61467–00	BRACKET,STOPPER CABLE	1	1	1			
43	9572R–06300	NUT, NYLON	3	3	3			YMUS
44	9299R–06200	WASHER	3	3	3			YMUS
45	GH3–61468–00	STOPPER, CABLE	1	1	1			
46	9572R–06300	NUT, NYLON	2	2	2			YMUS
47	EU0–23814–30	HOLDER, HANDLE UPPER	2	2	2			
48	90119–089UU	BOLT, WITH WASHER	4	4	4			YMUS
49	F0D–U156E–00	PAD 1	1	1	1			YMUS
50	90601–200U2	BAND	2	2	2			YMUS

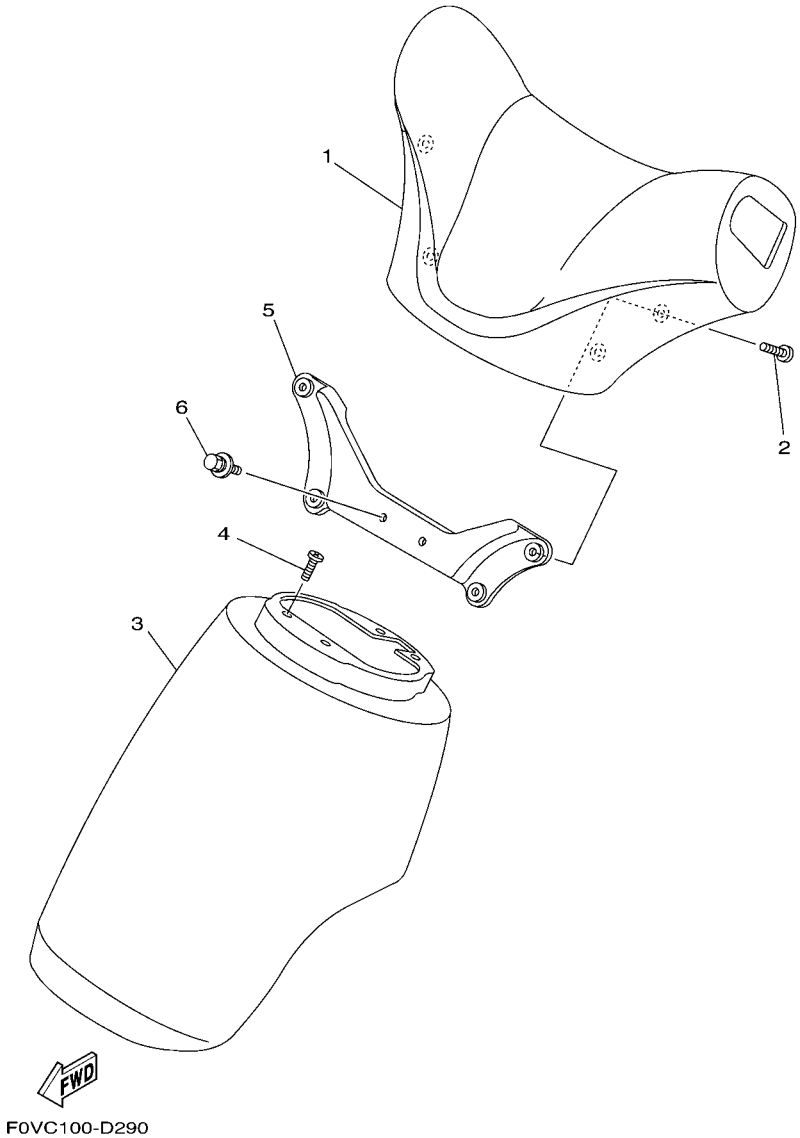

FIG. 29 STEERING 2

REF. NO.	PART NO.	DESCRIPTION	U49	GENE	JPN			REMARKS
1	F0D–U143D–00	PAD, STEERING 1	1	1	1			BL, YMUS
2	90149–06910	SCREW	4	4	4			
3	F0D–U143E–01	PAD, STEERING 2	1	1	1			BL, YMUS
4	90149–06906	SCREW	4	4	4			
5	F0D–U142K–00	FIX, STEERING PAD	1	1	1			YMUS
6	90119–069US	BOLT, WITH WASHER	2	2	2			YMUS

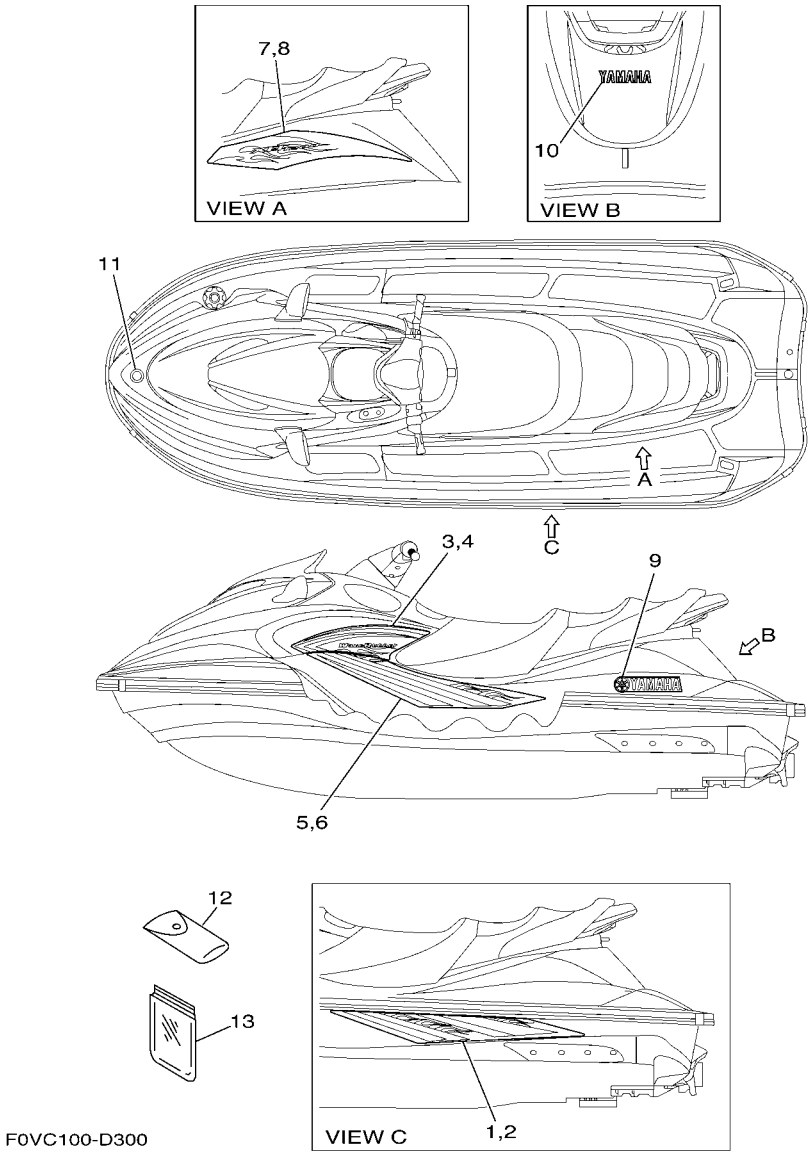

FIG. 30 GRAPHICS

REF. NO.	PART NO.	DESCRIPTION	U49	GENE	JPN			REMARKS
1	F0V–U417B–60	GRAPHIC 1	1	1	1			LH, YMUS
2	F0V–U417C–60	GRAPHIC 2	1	1	1			RH, YMUS
3	F0V–U417F–60	GRAPHIC 5	1	1	1			LH, YMUS
4	F0V–U417G–60	GRAPHIC 6	1	1	1			RH, YMUS
5	F0V–U417H–60	GRAPHIC 7	1	1	1			LH, YMUS
6	F0V–U417J–60	GRAPHIC 8	1	1	1			RH, YMUS
7	F0V–U417K–60	GRAPHIC 9	1	1	1			LH, YMUS
8	F0V–U417L–60	GRAPHIC B	1	1	1			RH, YMUS
9	F0V–U411C–10	EMBLEM, YAMAHA	2	2	2			YMUS
10	GJ3–U4114–52	MARK, YAMAHA A	1	1	1			YMUS
11	F1B–U411H–10	EMBLEM, TUNING FORK	1	1	1			YMUS
12	EU0–65986–00	TOOL SET	1	1	1			
13	EU0–65901–01	TOOL BAG	1	1	1			

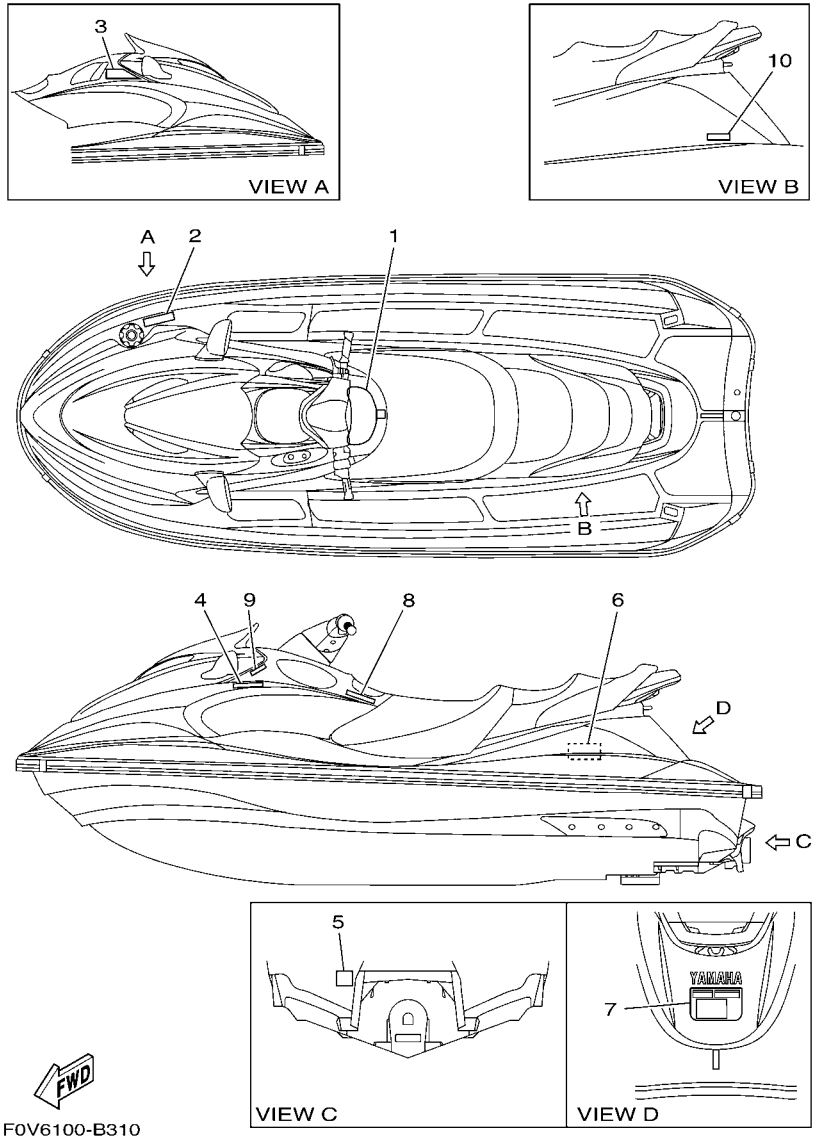

FIG. 31 IMPORTANT LABELS

REF. NO.	PART NO.	DESCRIPTION	U49	GENE	JPN			REMARKS
1	F0V–U41B1–41	LABEL, WARNING UNIFORM 1	1					YMUS
2	F0V–U415B–10	LABEL, WARNING(FUEL)	1					YMUS
3	F0V–U41D5–20	LABEL, WARNING SHIFT LEVER	1					YMUS
4	F0V–U41FB–00	LABEL, OIL	1					YMUS
5	GA9–U418F–00	LABEL, RIGHTING	1					YMUS
6	F0V–U41DB–01	LABEL, WARNING BATTERY	1					YMUS
7	F0V–U41E1–30	LABEL, SET 1	1					YMUS
8	F0V–U418W–00	LABEL, WARNING OVERHEAT	1					YMUS
9	F0V–U41F5–00	LABEL, FIRE EXTINGUISHER 1	1					YMUS
10	F0P–U41G1–00	LABEL, CAPACITY	1					YMUS

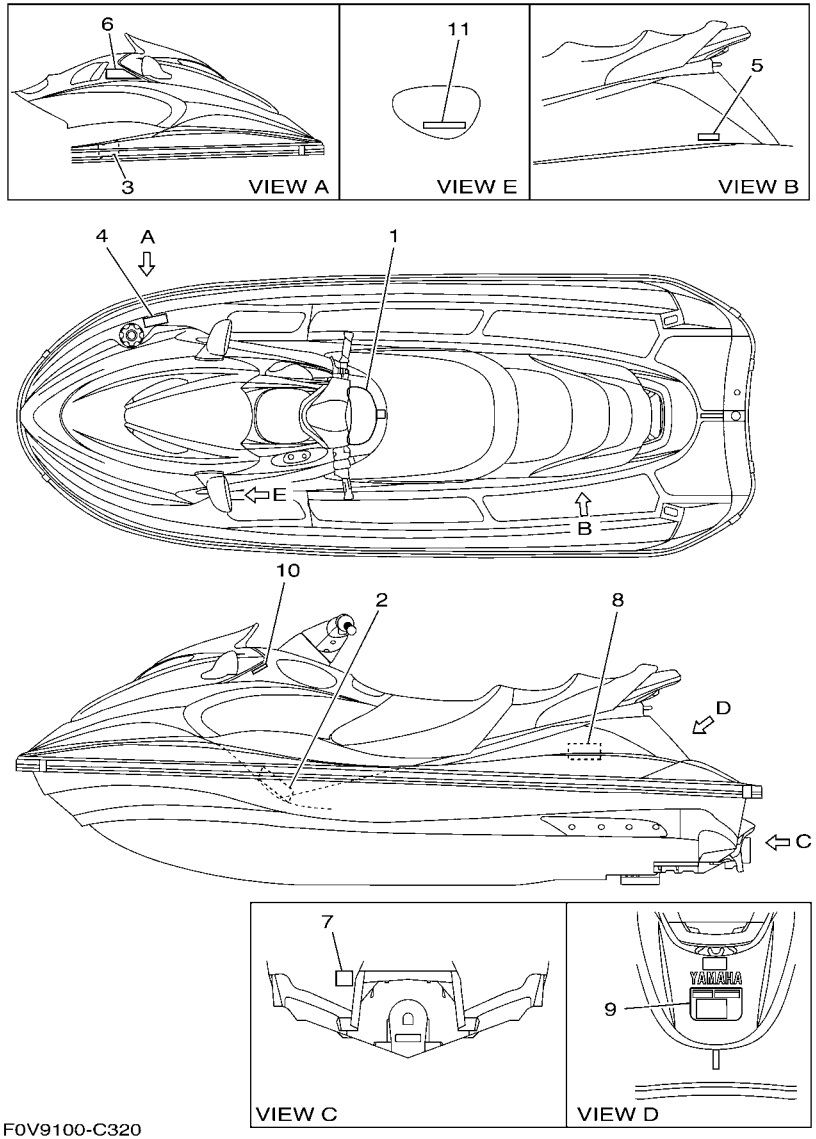

F0V9100-C320

FIG. 32 IMPORTANT LABELS 2

REF. NO.	PART NO.	DESCRIPTION	U49	GENE	JPN			REMARKS
1	F0V–U41B1–51	LABEL, WARNING UNIFORM 1		1				YMUS
2	F0V–U41B1–60	LABEL, WARNING UNIFORM 1		1				YMUS
3	F0M–U41B2–10	LABEL, WARNING UNIFORM 2		1				YMUS
4	F0V–U415B–00	LABEL, WARNING(FUEL)		1				YMUS
5	GJ3–U416H–00	LABEL,WARNING(FRANCE)		1				YMUS
6	F0V–U41D5–30	LABEL, WARNING SHIFT LEVER		1				YMUS
7	GA9–U418F–00	LABEL, RIGHTING		1				YMUS
8	F0V–U41DB–11	LABEL, WARNING BATTERY		1				YMUS
9	F0V–U41E1–40	LABEL, SET 1		1				YMUS
10	F1B–U41F5–20	LABEL, FIRE EXTINGUISHER 1		1				YMUS
11	GJ1–U419F–21	LABEL,5		2				YMUS

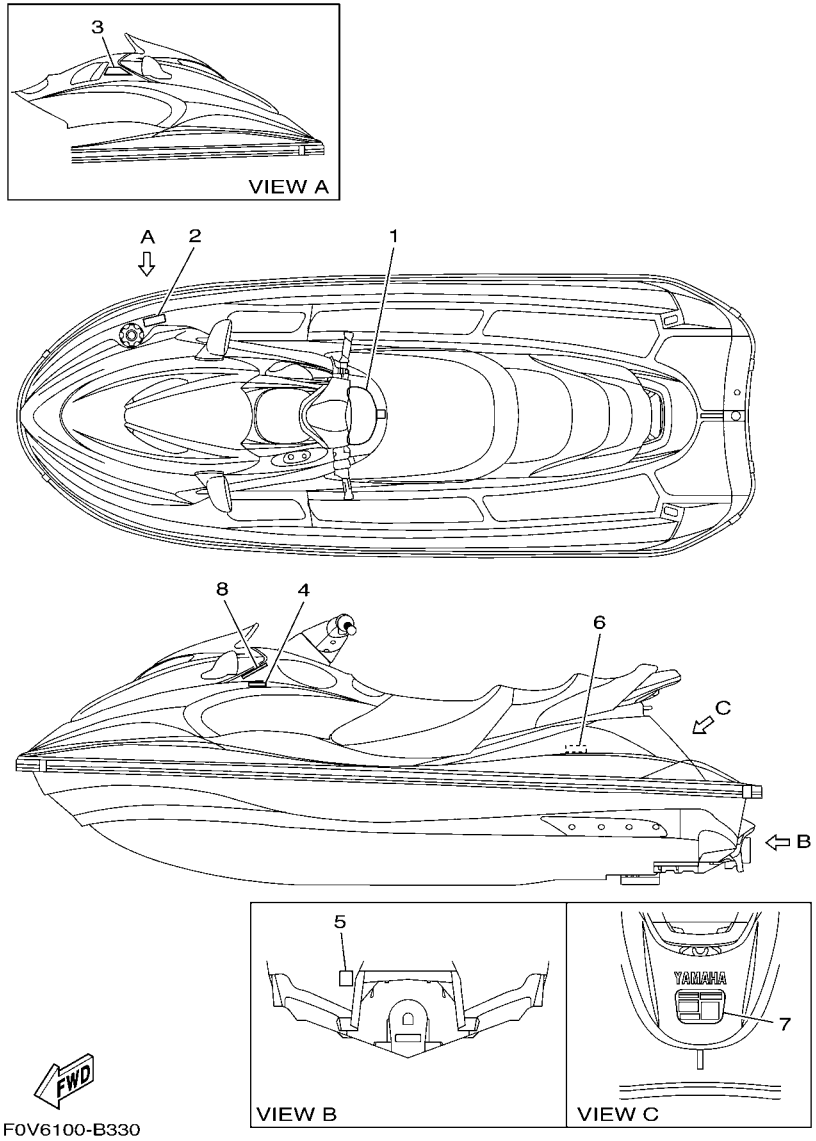

FIG. 33 IMPORTANT LABELS 3

REF. NO.	PART NO.	DESCRIPTION	U49	GENE	JPN			REMARKS
1	F0V–641B1–70	LABEL, WARNING UNIFORM 1			1			
2	F0V–6415B–20	LABEL, WARNING(FUEL)			1			
3	F0V–641D5–40	LABEL, WARNING SHIFT LEVER			1			
4	F0V–641FB–20	LABEL, OIL			1			
5	GA9–U418F–00	LABEL, RIGHTING			1			YMUS
6	F0V–641DB–20	LABEL, WARNING BATTERY			1			RH INSIDE
7	F0V–641E2–20	LABEL, SET 2			1			
8	GA9–U411B–00	PLATE,ASSY			1			YMUS

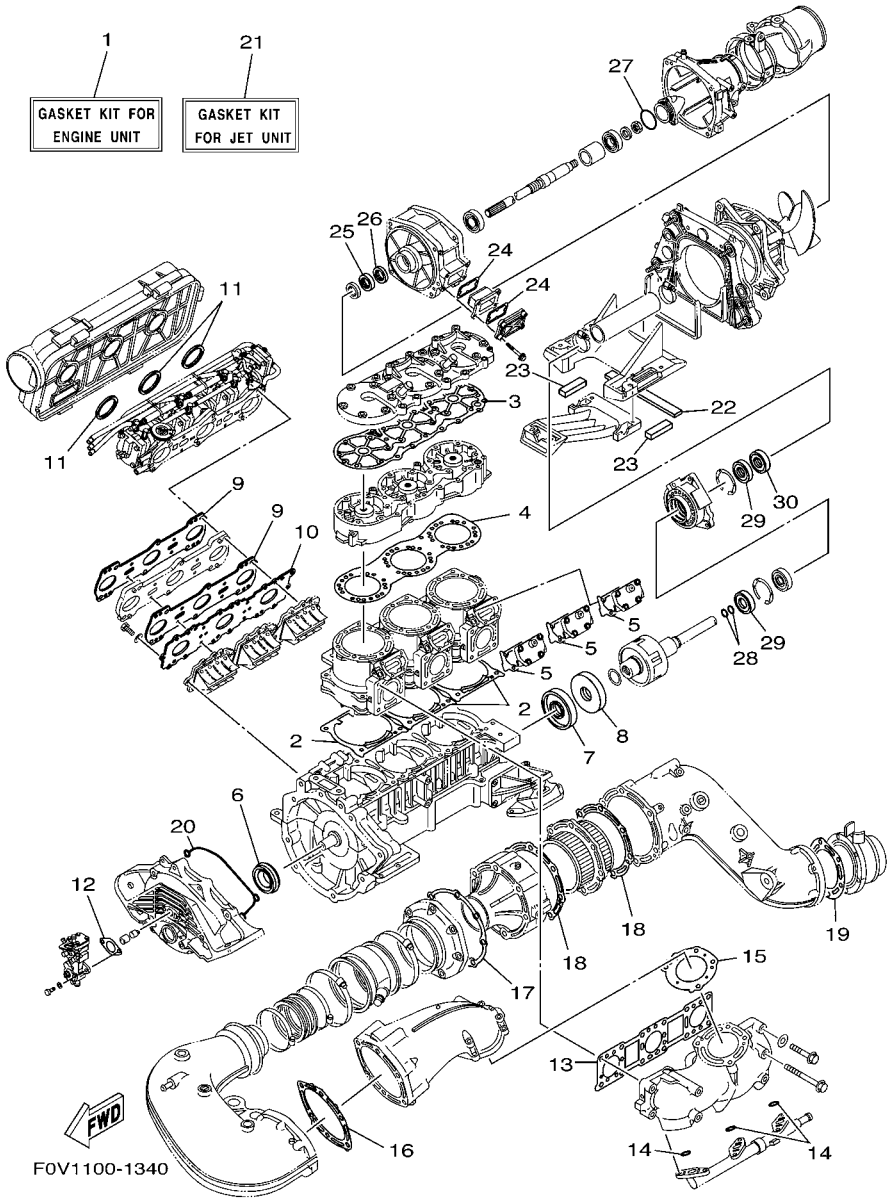

FIG. 34 REPAIR KIT 1

REF. NO.	PART NO.	DESCRIPTION	U49	GENE	JPN			REMARKS
1	68N–W0001–10	GASKET KIT FOR ENGINE UNIT	1	1	1			
2	66E–11351–01	.GASKET, CYLINDER	3	3	3			
3	66V–11193–00	.GASKET, HEAD COVER 1	1	1	1			
4	66V–11181–00	.GASKET, CYLINDER HEAD 1	1	1	1			
5	66E–1131B–01	.GASKET, COVER	3	3	3			
6	93102–35M57	.OIL SEAL	1	1	1			
7	93101–36M62	.OIL SEAL	1	1	1			
8	93101–36M61	.OIL SEAL	1	1	1			
9	68N–13556–00	.GASKET, MANIFOLD	2	2	2			
10	66V–13624–00	.PLATE,REED VALVE	1	1	1			
11	66E–13473–00	.O-RING	3	3	3			
12	63M–13116–00	.GASKET, PUMP CASE	1	1	1			
13	66V–14613–00	.GASKET, EXHAUST PIPE	1	1	1			
14	93210–17MA4	.O-RING	3	3	3			
15	66V–14739–00	.GASKET, MUFFLER DAMPER 1	1	1	1			
16	66V–14749–00	.GASKET, MUFFLER DAMPER 2	1	1	1			
17	66V–41114–00	.GASKET, EXHAUST OUTER COVER	1	1	1			
18	66V–41124–00	.GASKET, EXHAUST OUTER COVER	2	2	2			
19	68N–14623–00	.GASKET, EXHAUST PIPE	1	1	1			
20	66V–81168–10	.O-RING	1	1	1			
21	66V–W0001–20	GASKET KIT FOR JET UNIT	1	1	1			
22	66V–51367–00	.FELT, PACKING	1	1	1			
23	66V–51368–00	.FELT, PACKING	1	1	1			
24	66V–42414–00	.O-RING	2	2	2			
25	93101–28M66	.OIL SEAL	1	1	1			
26	93101–28M65	.OIL SEAL	1	1	1			
27	93210–46M16	.O-RING	1	1	1			

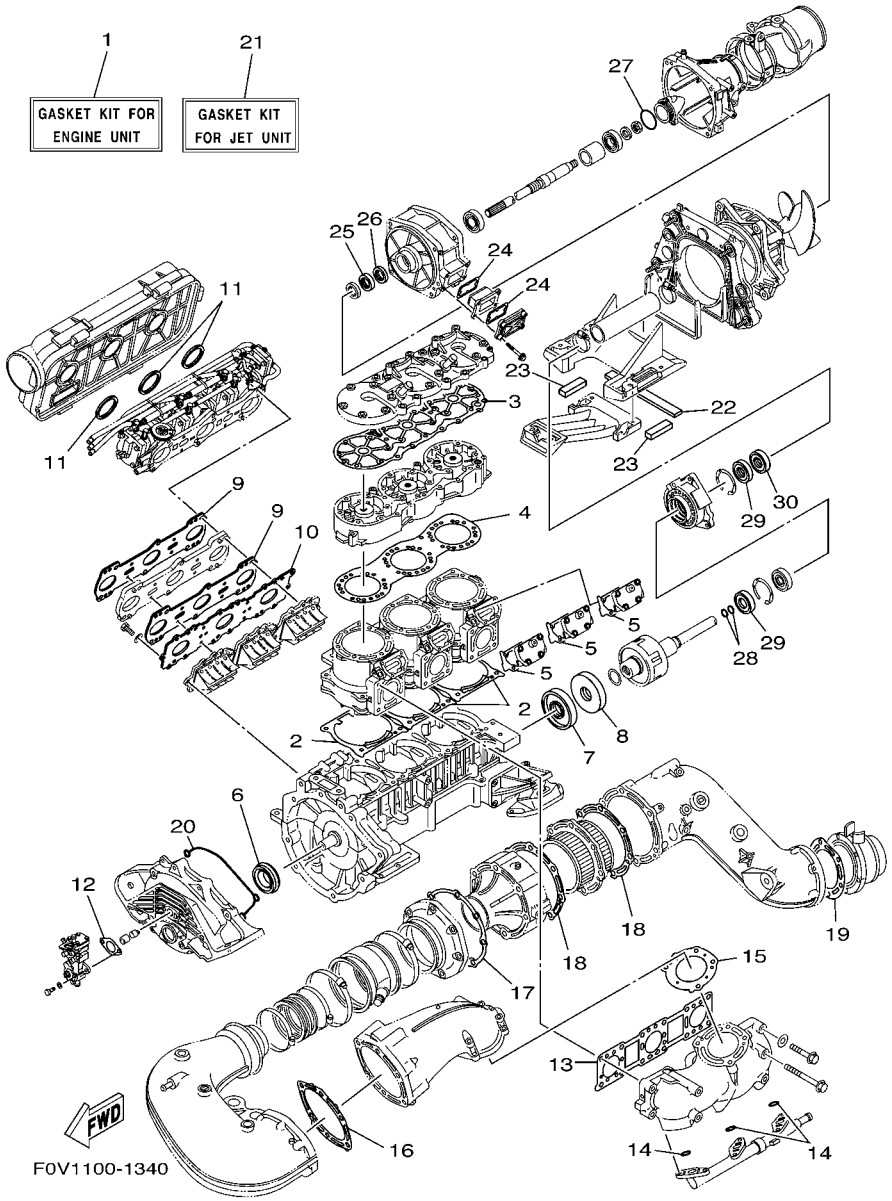

FIG. 34 REPAIR KIT 1

REF. NO.	PART NO.	DESCRIPTION	U49	GENE	JPN			REMARKS
28	93210–19MJ4	.O-RING	2	2	2			
29	93101–25M55	.OIL SEAL	2	2	2			
30	93101–25M56	.OIL SEAL	1	1	1			

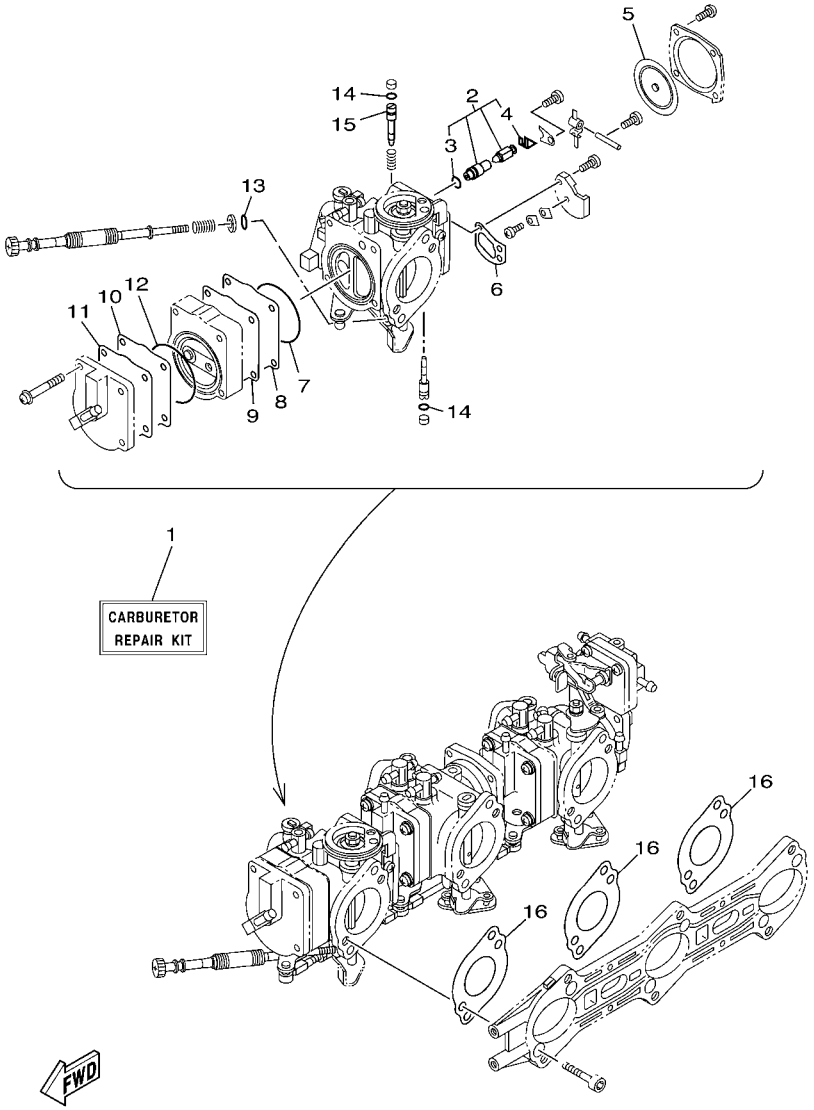

F0D5110-0320

FIG. 35 REPAIR KIT 2

REF. NO.	PART NO.	DESCRIPTION	U49	GENE	JPN			REMARKS
1	66V–W0093–01	CARBURETOR REPAIR KIT	1	1	1			
2	64T–14916–00	.NEEDLE	3	3	3			
3	8F2–14147–00	..O-RING	1	1	1			
4	7EG–14159–00	..CLIP	1	1	1			
5	6R7–14541–00	.DIAPHRAGM, PUMP	3	3	3			
6	6K8–14536–11	.GASKET	3	3	3			
7	66E–14563–01	.O-RING	3	3	3			
8	66E–24471–00	.DIAPHRAGM	3	3	3			
9	66E–24411–00	.DIAPHRAGM	3	3	3			
10	66E–24421–00	.VALVE, CHECK	3	3	3			
11	66E–24431–00	.GASKET, FUEL PUMP 1	3	3	3			
12	66E–14564–01	.O-RING	3	3	3			
13	812–14147–00	.O-RING	1	1	1			
14	93210–03119	.O-RING	6	6	6			
15	66V–14946–00	.PLATE, NEEDLE FITTING	3	3	3			
16	66E–14398–00	.GASKET	3	3	3			

NUMERICAL INDEX

PART NO.	GRID NO.
67X–11111–00–8S	B – 2
66V–11152–00	C – 5
66V–11181–00	B – 2
	E – 15
66V–11191–01–8S	B – 2
66V–11193–00	B – 2
	E – 15
66V–11311–00–94	B – 2
66E–1131B–01	B – 4
	E – 15
66E–1131C–10	B – 4
66E–1131H–00	B – 4
66E–1131J–10	B – 4
66E–1131M–01–94	B – 4
66E–1131S–10	B – 4
66E–1131V–00	B – 4
66E–11325–00	B – 4
66E–1132C–00	B – 4
66V–11333–00	B – 4
66V–1133E–00	B – 4
66V–1133F–00	B – 4
66E–11351–01	B – 2
	E – 15
66V–11400–00	B – 5
66E–11412–00	B – 5
66E–11422–00	B – 5
66E–11431–00	B – 5
66E–11442–00	B – 5
66V–11452–00	B – 5
66E–11515–00	B – 5
66V–11603–00	B – 5
66V–11631–00–A0	B – 5
66V–11631–00–B0	B – 5
66V–11631–00–C0	B – 5
66V–11631–00–D0	B – 5
60T–11633–00	B – 5
66E–11634–00	B – 5
66E–11651–00	B – 5
66E–11685–00	B – 5
60T–11832–00	B – 4
66E–11998–00	B – 4
67X–12481–00	C – 6
66V–12576–00	C – 4
66V–12577–00	C – 4
66V–12579–00	C – 7
64T–12580–00	C – 7
66V–12581–00	C – 7
67X–12590–00	C – 8

PART NO.	GRID NO.
67X–12590–10	C – 8
67X–12590–20	C – 8
60E–12594–00	C – 7
63M–13116–00	C – 2
	E – 15
63M–13132–00	C – 3
65U–13132–00	C – 2
67X–13183–00	C – 2
66V–13185–00	C – 3
66V–13200–00	C – 2
66V–13416–01	C – 2
66E–13469–00	C – 2
66E–13473–00	B – 7
	E – 15
68N–13556–00	B – 7
	E – 15
66V–13610–00	B – 7
66V–13620–00	B – 7
66V–13624–00	E – 15
66V–13624–00–94	B – 7
67B–13784–00	B – 13
66V–13898–00	B – 7
67B–13976–00	B – 15
67B–14118–00	B – 14
66V–14124–00	B – 10
	B – 14
4KM–14137–00	B – 11
	B – 15
35H–14139–00	B – 11
	B – 14
66V–14146–00	B – 10
	B – 14
68N–14146–00	B – 10
812–14147–00	B – 10
	B – 14
	F – 3
8F2–14147–00	B – 9
	B – 13
	F – 3
7EG–14159–00	B – 9
	B – 13
	F – 3
66V–14160–00	B – 10
	B – 14
68N–14162–00	B – 11
66E–14162–01	B – 11
	B – 14
68N–14162–10	B – 11

PART NO.	GRID NO.
66E–14170–00	B – 10
67B–14170–00	B – 13
439–14186–00	B – 10
	B – 14
66V–14211–00	B – 10
	B – 14
3G2–14231–27	B – 13
812–14235–00	B – 10
	B – 14
1HX–1423A–68	B – 10
1HX–1423A–69	B – 14
3G2–1423A–74	B – 9
65U–14251–00	C – 4
66V–14251–00	B – 2
6R7–14253–00	B – 9
	B – 13
68N–14271–00	B – 7
66E–14280–00	B – 10
66V–14284–00	B – 7
66E–14286–00	B – 10
67B–14286–00	B – 13
66V–14294–00	B – 11
68N–14301–02	B – 9
69E–14301–02	B – 13
68N–14301–10	B – 9
68N–14302–02	B – 9
69E–14302–02	B – 13
68N–14302–10	B – 9
68N–14303–02	B – 9
69E–14303–02	B – 13
68N–14303–10	B – 9
66V–1432A–00	B – 10
66E–14398–00	B – 10
	B – 14
	F – 3
66V–14419–00	B – 7
66V–14440–00	B – 7
66V–14451–00	B – 7
66V–14457–00	B – 7
66V–14480–01	B – 7
68N–14486–00	B – 10
	B – 14
66V–14488–00	C – 5
6K8–14503–02	B – 9
	B – 13
6K8–14523–11	B – 10
	B – 14
66V–14527–00	B – 11

PART NO.	GRID NO.
66V–14527–00	B – 15
68N–14527–00	B – 11
6K8–14536–11	B – 9
	B – 13
	F – 3
6R7–14541–00	B – 9
	B – 13
	F – 3
6R7–14542–00	B – 9
	B – 13
6K8–14547–01	B – 9
	B – 13
66E–14563–01	B – 9
	B – 13
	F – 3
66E–14564–01	B – 10
	B – 14
	F – 3
6R7–14569–00	B – 9
	B – 13
68N–14585–00	B – 11
	B – 15
66V–14613–00	C – 4
	E – 15
66V–14615–02	C – 5
68N–14623–00	C – 6
	E – 15
66V–14625–00	C – 5
67B–1465A–00	C – 5
66V–14711–00–94	C – 4
60T–14712–00–94	C – 4
66V–14718–00	C – 7
66V–14721–01–94	C – 4
66V–14739–00	C – 4
	E – 15
66V–14740–02	C – 5
66V–14749–00	C – 4
	E – 15
66V–14752–00	C – 7
66E–14771–01–94	C – 6
66V–14771–01–94	C – 5
66V–14779–00	C – 5
66V–1477K–00	C – 6
66V–1477L–00	C – 5
66V–14782–00–94	C – 6
68N–14784–00–94	C – 6
68N–14791–00–94	C – 6
64T–14916–00	F – 3

PART NO.	GRID NO.
64T–14916–01	B – 9
	B – 13
3KW–14932–00	B – 10
	B – 14
66V–14946–00	B – 10
	B – 14
	F – 3
4XY–14951–00	B – 11
68N–15100–00–8S	B – 2
66V–15779–00	C – 7
68N–21425–00–94	B – 2
68N–21426–00–94	B – 2
EU0–23814–30	E – 9
66V–24312–00	B – 11
	B – 15
66V–24313–01	B – 12
	B – 15
66V–24314–00	C – 3
66E–24362–00	B – 9
	B – 13
6G8–24376–00	C – 3
66V–24377–00	C – 4
63M–24378–00	C – 3
66E–24411–00	B – 9
	B – 13
	F – 3
66E–24412–01	B – 10
	B – 14
66E–24413–01	B – 9
	B – 13
66E–24421–00	B – 9
	B – 13
	F – 3
66E–24431–00	B – 9
	B – 13
	F – 3
66V–24452–00	B – 9
	B – 13
66V–24452–10	B – 10
	B – 13
66V–24452–20	B – 9
66E–24471–00	B – 9
	B – 13
	F – 3
70R–24489–00	E – 2
65U–24492–00	B – 9
	B – 13
66V–24500–02	C – 9

PART NO.	GRID NO.
70R–24543–00	E – 2
66V–24560–00	C – 9
66V–26320–00	C – 2
67F–2812A–00	D – 3
68N–41111–00–94	C – 5
68N–41113–00–94	C – 5
66V–41114–00	C – 5
	E – 15
68B–41123–00–94	C – 6
68N–41123–00–94	C – 6
66V–41124–00	C – 5
	E – 15
66V–41217–00	B – 10
	B – 14
66V–42414–00	C – 10
	E – 15
66E–42717–00	B – 7
66V–44121–00	C – 14
66V–44125–00	C – 14
68N–44517–00–94	B – 3
66V–44532–00–94	B – 3
66V–44574–00–94	B – 3
663–45119–00	C – 6
66V–45214–00–94	C – 10
61X–45332–03–94	C – 13
61L–45378–00	C – 13
68Y–45511–00	C – 10
65V–45538–00	C – 10
68N–45593–00–94	B – 6
66E–45813–10–94	B – 6
66E–4581J–00	B – 6
66V–46882–00	C – 10
66E–51129–00	B – 2
	C – 4
66V–51129–01	C – 10
66V–51129–10	C – 10
68N–5112T–00	D – 10
66V–51142–00	C – 2
66G–51190–00–94	C – 11
66V–51311–00–94	C – 10
66V–51312–01–94	C – 10
66V–51314–11	C – 14
66V–51315–00–94	C – 10
66V–51318–00–94	C – 11
68N–51323–00	C – 13
66V–51333–00–94	C – 10
63M–51334–00	C – 11
66V–51341–00–94	C – 14

NUMERICAL INDEX

PART NO.	GRID NO.
66V–51367–00	E – 15
66V–51368–00	E – 15
61L–5169A–00	C – 6
F0D–52543–00	E – 8
F0D–61349–00	E – 9
F0V–6134A–00	E – 6
F0D–6134E–00	E – 9
F0D–6134K–00	E – 9
F0D–6134M–00	E – 8
F0D–61355–00	E – 8
F0D–6135D–00	E – 9
F0D–61400–11	E – 8
EU0–61461–02	E – 9
F0D–61467–00	E – 9
GH3–61468–00	E – 9
GH1–61468–01	E – 6
F0D–6151S–00	E – 8
F0D–6152D–00	E – 8
F0D–6152R–00	E – 8
F0D–61574–00	E – 9
F0D–61624–01	D – 10
GP7–61628–00	D – 13
GH1–61651–01	D – 11
EU0–61652–00	C – 8
	D – 10
	D – 11
F0D–61782–00	E – 9
F0D–62127–00	D – 12
F0D–62139–00	D – 12
EW2–62140–00	E – 2
EW2–62142–00	E – 2
EW2–62149–00	D – 12
GP7–62159–01	D – 12
GJ3–6215F–00	D – 12
EU0–62241–30	C – 11
	E – 5
EU0–62280–00	D – 10
EU0–62282–00	D – 10
EU0–62283–00	D – 10
EU0–62285–01	D – 10
F0D–62624–00	E – 8
FN8–6269B–00	D – 10
F0X–62733–00	E – 4
F0D–62814–00	E – 9
F0D–62875–00	D – 7
F0D–6376D–00	D – 14
F0D–63774–01	D – 8
F0D–6378D–01	D – 13

PART NO.	GRID NO.
F0D–63850–01	D – 13
F0V–6415B–20	E – 14
F0V–641B1–70	E – 14
F0V–641D5–40	E – 14
F0V–641DB–20	E – 14
F0V–641E2–20	E – 14
F0V–641FB–20	E – 14
F0D–64261–02	E – 4
F0D–6491K–00	E – 8
F0V–6515A–01	D – 8
F0D–6517C–04	D – 8
F0D–6517R–00	D – 7
F0D–6517T–00	D – 7
GA7–65772–00	E – 4
EU0–65901–01	E – 11
EU0–65986–00	E – 11
66V–67242–01	E – 5
EW2–67243–00	E – 6
F0N–6724E–00	E – 6
F0P–6724F–00	E – 6
F0D–6724H–00	E – 9
F0D–67250–03	E – 8
66V–67252–00	E – 5
F0D–67255–01	E – 8
EW2–67256–00	E – 8
F0D–67257–00	E – 8
EW2–67258–01	E – 8
EW2–67259–01	E – 8
EU0–67267–10	E – 5
GK5–67267–10	E – 6
EU0–67267–20	C – 11
F0D–67410–01	E – 8
F1B–6753B–00	E – 4
F0D–6753D–01	E – 4
F0D–67550–03	E – 4
F1B–67564–00	E – 4
GA7–6756E–00	E – 4
F0D–6758B–00	E – 4
F0D–6758C–01	E – 4
F0D–6773E–00	E – 7
GH3–67743–01	E – 2
F0D–6775C–01	D – 15
F0D–6775E–01	D – 15
FJ0–67766–00	D – 15
EU0–67767–31	E – 2
F0D–6777C–00	C – 9
FN8–67816–00	C – 9
F0D–6820A–01	D – 6

PART NO.	GRID NO.
F0D–6820A–11	D – 6
F0D–6820A–21	D – 6
F0D–6822E–00	E – 6
F0D–68238–10	D – 6
F0D–68310–01	E – 8
FK7–68312–02	E – 8
FK7–68313–02	E – 8
F1B–68341–00	E – 9
EW2–68348–00	E – 8
66V–81168–10	C – 15
	E – 15
66V–81315–00	D – 3
65U–81317–10	D – 4
66V–81328–00	C – 15
66V–8132W–00	D – 3
68N–81337–00–94	C – 15
63M–81800–00	D – 2
3AJ–81809–00	D – 2
6M6–81826–00	D – 2
63M–81830–00	D – 2
6M6–81830–00	D – 2
6M6–8183E–01	D – 2
6M6–81840–10	D – 2
11H–81844–00	D – 2
66V–81844–00	D – 3
1FK–81847–00	D – 2
6M6–81850–00	D – 2
6M6–81865–00	D – 2
6M6–81866–00	D – 2
66V–81921–00	D – 3
68N–81940–00	D – 3
66V–81960–00	D – 4
EU0–82110–09	D – 6
66V–82117–00	D – 3
66V–82117–10	D – 3
66V–82117–20	D – 3
66V–82127–00	D – 5
66V–82150–00	D – 3
66V–82151–00	D – 4
67F–82151–00	D – 3
66V–82153–00	D – 4
66V–82171–00	D – 4
66V–82340–01	D – 4
66V–82340–11	D – 4
66V–82340–21	D – 4
66V–82355–00	D – 4
66V–82509–00	D – 4
67B–82509–00	D – 4

PART NO.	GRID NO.
66V–82553–10	D – 4
66V–83553–00	D – 3
67B–83553–00	D – 3
63N–83623–00	D – 5
6R7–83623–40	D – 5
6R7–83623–50	D – 5
60E–83627–00	D – 5
66V–83919–00	D – 3
66V–83955–00	D – 3
682–84385–01	C – 7
66V–85510–00	C – 15
66V–85515–00	D – 3
66V–85525–00	D – 4
66V–8552A–00	D – 3
66V–8552E–00	D – 3
66V–85540–00	D – 3
67B–85540–00	D – 3
66V–85542–00	D – 4
66V–85550–00	C – 15
66V–85570–00	D – 4
66V–85790–10	D – 4
66V–85820–10	B – 4
66E–85825–00	B – 4
66V–85881–00	D – 4
66V–G5831–02	C – 10
65A–R1129–00	C – 10
66V–R1313–01	C – 11
68N–R1321–00	C – 11
65A–R1326–10	C – 10
66V–R1348–10	C – 11
66V–R1367–00	C – 10
66V–R1368–00	C – 10
66V–R1381–01	C – 13
GH1–U046C–00	E – 5
F0D–U142K–00	E – 10
GH1–U143B–00	E – 5
F0D–U143D–00	E – 10
F0D–U143E–01	E – 10
F0V–U1461–00	E – 6
EU0–U1461–30	E – 5
GP8–U1461–T0	E – 6
66V–U146E–00	C – 14
GH3–U146E–00	C – 11
GK5–U146F–00	E – 6
F0D–U1481–10	E – 6
F0V–U149C–00	E – 6
GP7–U151M–00	E – 5
F0D–U152C–10	E – 5

PART NO.	GRID NO.
GP7–U152M–00	E – 5
GP7–U152P–00	E – 5
GP7–U152R–00	E – 5
F0D–U153D–01	E – 5
F0D–U153E–10	E – 5
F0D–U153J–10	E – 5
F0D–U1552–00	E – 8
GP7–U155C–00	E – 5
GP7–U155D–00	E – 8
GP7–U155F–00	E – 5
	E – 8
F0D–U156E–00	E – 9
GP7–U157A–00	E – 5
F0V–U2103–11	D – 8
F0V–U2118–00	D – 12
F0D–U213F–05	D – 12
F0D–U213G–04	D – 12
GP7–U2501–20	D – 11
F0D–U2512–00	D – 11
F1F–U2519–01	D – 11
F0D–U251D–00	D – 11
F0D–U252C–00	D – 11
F0V–U252D–00	D – 11
F0V–U2624–10	D – 10
F0V–U266B–00	D – 8
F0D–U266C–00	D – 13
GJ3–U266C–31	D – 8
F0D–U266D–00	D – 13
F0V–U2714–00	E – 6
F0D–U271B–00	D – 13
F0V–U273B–00	C – 12
F0P–U351H–00	D – 11
F0P–U351J–00	D – 11
F0V–U351K–00	D – 11
F0V–U351M–00	D – 11
F0V–U351N–00	D – 11
F0V–U351P–00	D – 11
F0D–U351R–00	D – 11
F0V–U358F–03	D – 11
F0V–U358G–03	D – 11
F0V–U3635–00	D – 8
F0V–U3635–10	D – 8
F0V–U3635–20	D – 8
F0V–U371A–60	D – 13
F0V–U371B–60	D – 13
F0V–U372A–60	D – 13
F0V–U372B–60	D – 13
GH1–U3774–00	D – 13

PART NO.	GRID NO.
F0V–U378C–00	D – 13
GJ3–U4114–52	E – 11
GA9–U411B–00	E – 14
F0V–U411C–10	E – 11
F1B–U411H–10	E – 11
F0V–U415B–00	E – 13
F0V–U415B–10	E – 12
GJ3–U416H–00	E – 13
F0V–U417B–60	E – 11
F0V–U417C–60	E – 11
F0V–U417F–60	E – 11
F0V–U417G–60	E – 11
F0V–U417H–60	E – 11
F0V–U417J–60	E – 11
F0V–U417K–60	E – 11
F0V–U417L–60	E – 11
GA9–U418F–00	E – 12
	E – 13
	E – 14
F0V–U418W–00	E – 12
GJ1–U419F–21	E – 13
F0V–U41B1–41	E – 12
F0V–U41B1–51	E – 13
F0V–U41B1–60	E – 13
F0M–U41B2–10	E – 13
F0V–U41D5–20	E – 12
F0V–U41D5–30	E – 13
F0V–U41DB–01	E – 12
F0V–U41DB–11	E – 13
F0V–U41E1–30	E – 12
F0V–U41E1–40	E – 13
F0V–U41F5–00	E – 12
F1B–U41F5–20	E – 13
F0V–U41FB–00	E – 12
F0P–U41G1–00	E – 12
F0V–U471E–00	D – 9
F0V–U471F–00	D – 9
F0D–U474A–00	D – 13
F0D–U475A–00	D – 8
GP7–U4953–00	D – 13
F0V–U515E–00	D – 8
F0V–U516N–10–P0	D – 7
F0V–U517B–B0–P0	D – 8
F0V–U517H–20	D – 7
F0V–U517M–00	D – 8
F0D–U519D–01	D – 7
EW2–U5912–01	D – 8
EW2–U5913–01	D – 8

NUMERICAL INDEX

PART NO.	GRID NO.
F0V–U596B–04	D – 9
F0V–U596C–04	D – 9
GP7–U5983–00	D – 8
GD0–U7249–00–05	C – 13
GD0–U7249–00–10	C – 13
F0V–U7267–00	E – 6
EU0–U7354–00–01	B – 3
EU0–U7354–00–03	B – 3
EU0–U7354–00–05	B – 3
EU0–U7354–00–10	B – 3
EU0–U7354–00–20	B – 3
F0V–U7525–01	C – 12
F0D–U7578–00	E – 4
GJ1–U7578–11	C – 12
GJ1–U7578–21	C – 8
F0V–U757B–00	E – 4
F0V–U758D–00	E – 4
F0D–U759B–00	E – 2
F0D–U759B–10	E – 3
F0D–U759C–00	E – 3
GJ1–U759C–00	E – 3
F1B–U761D–02	D – 10
F0D–U7711–00	E – 2
F0D–U775B–02	D – 15
F0D–U776C–10	D – 15
F0V–U7772–00	D – 7
GJ3–U778B–00	D – 15
GJ3–U778C–00	D – 15
F0X–U778D–00	D – 15
F0X–U778E–00	D – 15
F0X–U778H–00	D – 15
EU0–U7817–00	C – 9
GP7–U7831–01	E – 2
GP7–U7832–01	E – 2
GP7–U7833–00	E – 2
GP7–U7834–00	E – 2
EU0–U7835–00	D – 15
GP7–U7835–00	E – 2
GP7–U783F–00	E – 2
F0D–U7844–10	E – 2
F0D–U7856–10	E – 2
GJ3–U7856–20	D – 15
F0D–U785G–10	D – 6
	E – 2
GP7–U785H–00	E – 2
GP7–U8211–00	D – 6
EU0–U821D–00	D – 6
F0X–U8221–00	D – 6

PART NO.	GRID NO.
EU0–U8221–30	D – 6
F0V–U824B–03	D – 6
F0D–U824C–20	D – 6
GJ1–U835D–00	C – 11
F0D–U883B–01	C – 13
F0D–U883E–00	C – 13
F0D–U883N–20	D – 10
F0D–U883P–20	D – 10
F1F–U883T–01	D – 10
F0V–U8K31–00	C – 11
68N–W0001–10	E – 15
66V–W0001–20	E – 15
66V–W0004–00	B – 7
68N–W0090–12–8S	B – 2
66V–W0093–01	F – 3
90101–06806	C – 14
90101–06917	B – 3
90101–069U0	D – 13
90105–08041	B – 7
90105–08M22	C – 6
90105–10M87	C – 6
90109–06803	E – 6
90109–06M99	C – 4
	C – 7
90109–08879	C – 14
90109–10M72	C – 15
90110–04M03	B – 4
90110–05008	B – 4
90110–05908	E – 5
	E – 8
90110–06068	B – 7
90116–06802	E – 4
90116–10M66	C – 6
90116–10M68	C – 4
90119–06800	C – 10
90119–06803	D – 7
90119–06820	D – 13
90119–06835	C – 10
90119–06858	D – 7
90119–069UB	C – 11
	C – 14
	D – 8
90119–069UD	C – 13
	C – 14
90119–069UH	D – 8
90119–069UJ	E – 6
90119–069UK	C – 12
90119–069UP	D – 13

PART NO.	GRID NO.
90119–069US	D – 6
	E – 10
90119–069UX	B – 4
90119–06M13	B – 2
90119–06M84	B – 2
90119–08823	B – 3
	C – 12
90119–08827	B – 3
90119–089U7	E – 2
90119–089UE	C – 11
90119–089UF	C – 14
90119–089UL	C – 13
90119–089UR	D – 3
90119–089UU	E – 9
90119–08M18	B – 2
90119–08M22	B – 7
90119–08M63	B – 2
	C – 5
90119–08M67	B – 2
90119–08MA0	B – 2
90119–10836	C – 10
90119–10837	C – 11
90119–10M00	C – 6
90119–10M07	B – 2
90119–10M11	C – 4
90119–10M13	C – 6
90119–10M18	C – 6
90119–10M19	C – 4
90119–10M20	C – 4
90119–10M23	C – 5
90149–03M15	E – 5
90149–05962	D – 12
90149–06906	E – 10
90149–06910	E – 10
90149–069UA	C – 13
90157–05M17	B – 10
	B – 14
90169–049U1	E – 2
90169–059U1	D – 11
90170–22187	C – 9
90179–06814	C – 12
90179–10M35	C – 6
90179–10M36	C – 4
90183–06902	D – 7
	D – 8
90201–06068	C – 15
90201–06802	D – 8
90201–068M4	C – 11

PART NO.	GRID NO.
90201–068T1	C – 14
90201–06906	E – 6
90201–06M04	B – 4
90201–088T2	C – 14
90201–08M09	B – 4
90201–099U3	B – 3
	E – 9
90201–10801	C – 12
90201–22M04	B – 5
90201–248M5	B – 6
90201–28008	C – 5
90202–229U1	C – 9
90267–329UR	E – 2
90267–40935	D – 15
90267–47801	D – 11
90267–48802	D – 6
	D – 12
90267–48809	D – 8
90267–489U1	C – 9
90267–489U2	E – 2
90267–489U7	E – 4
90267–489U8	D – 10
90267–489UE	D – 12
90267–489UP	D – 8
90267–489US	D – 11
90280–05013	C – 15
90380–12M29	B – 2
	C – 15
90387–05800	E – 5
90387–06M05	B – 2
90387–06M60	C – 13
90387–06M74	C – 14
90387–06M84	C – 14
90387–07598	B – 4
90387–08802	D – 8
90387–08M06	C – 11
90387–08M30	C – 14
90387–08M37	B – 7
90387–10M09	C – 14
90387–12M05	C – 5
90387–35M01	B – 5
90430–09M10	C – 7
90445–07003	B – 11
90445–07004	B – 11
90445–07005	B – 11
90445–07007	C – 2
90445–07M09	C – 2
90445–07M60	B – 14

PART NO.	GRID NO.
90445–07M61	B – 15
90445–07M62	B – 15
90445–07M63	B – 15
90445–09M33	C – 6
90445–11019	C – 9
90445–11M33	C – 2
90445–11M67	C – 9
90445–11M68	C – 9
90445–11M69	C – 9
90445–11M70	C – 9
90445–11M73	B – 11
	B – 14
90445–12M10	C – 4
90445–14898	C – 11
90445–14M09	C – 7
90445–14M33	C – 7
90445–16M09	C – 11
90445–18006	C – 7
90445–198B9	D – 10
90445–198C0	D – 10
90445–21002	C – 7
90446–07MG1	B – 11
	B – 15
90446–07MG3	B – 11
	B – 15
90446–07MG5	B – 11
	B – 15
90446–10M82	C – 2
90446–10ME3	C – 2
90446–10MG0	B – 11
	B – 15
90446–10MG2	B – 11
	B – 15
90446–10MG4	B – 11
	B – 15
90446–10MG7	B – 15
90446–10MG8	B – 15
90446–10MG9	B – 14
90446–14MA9	B – 11
	B – 15
90446–17MA5	C – 9
90446–17ME2	C – 2
90446–17ME8	C – 3
90446–17MG6	B – 11
	B – 14
90446–20M70	C – 7
90446–20ME4	C – 7
90446–24M52	C – 7

PART NO.	GRID NO.
90446–27M55	D – 10
90446–27M73	D – 10
90446–27M95	C – 7
90447–07003	B – 10
90447–07004	B – 11
90447–13005	C – 9
90450–14M05	C – 7
90450–18M09	C – 7
90450–22M14	C – 4
	C – 7
90450–99M02	C – 7
90460–11M17	B – 12
	B – 15
	C – 4
90460–90M19	C – 5
90460–99M20	C – 5
90460–99M23	B – 8
90464–07M05	C – 3
90464–07M56	C – 7
90464–14M55	B – 7
90464–32801	D – 6
	D – 15
	E – 4
90464–40825	C – 12
90464–99801	C – 12
90464–99804	D – 12
	E – 2
90465–11829	C – 3
	C – 9
	C – 11
	C – 13
	D – 10
	D – 12
	D – 15
	E – 2
90465–11M10	C – 2
	C – 6
	C – 9
	C – 15
	D – 4
	E – 5
90465–12M53	B – 2
90465–13M36	C – 4
	D – 5
90465–13M60	B – 11
	B – 15
90467–089U1	D – 6
90468–02001	C – 2

PART NO.	GRID NO.
90480–06M46	C – 13
90480–14023	B – 4
90480–22M15	B – 7
90480–30M78	C – 5
90501–14M73	D – 2
90508–14M43	C – 14
90600–900U6	C – 12
90600–917U4	D – 6
90600–921U1	C – 12
90600–925U9	C – 11
90601–118UF	C – 8
	C – 11
	D – 10
	E – 4
90601–142U6	D – 15
90601–152U3	C – 13
90601–155U4	E – 2
90601–162U5	D – 6
90601–195UD	E – 4
90601–20009	D – 6
90601–200U1	E – 6
90601–200U2	E – 9
90605–502U2	D – 7
91317–06030	C – 15
91318–06014	C – 15
92903–06600	B – 2
	B – 7
	D – 2
	D – 5
92903–08600	B – 3
	D – 2
92903–10600	C – 4
	C – 15
92990–04600	E – 5
92990–06100	D – 2
92990–06600	E – 5
92995–06100	D – 3
92995–06600	B – 11
	B – 15
	C – 2
	D – 3
9299R–05200	D – 10
	E – 4
9299R–06100	E – 5
9299R–06200	D – 7
	D – 11
	D – 13
	E – 4

PART NO.	GRID NO.
9299R–06200	E – 6
	E – 9
9299R–08200	D – 8
	D – 10
9299R–08600	C – 14
9299R–10200	D – 13
9299R–16600	C – 10
93101–25M55	C – 13
	F – 2
93101–25M56	C – 13
	F – 2
93101–28M65	C – 10
	E – 15
93101–28M66	C – 10
	E – 15
93101–34001	B – 5
93101–34002	B – 5
93101–36M61	E – 15
93101–36M62	E – 15
93102–35M57	E – 15
93103–35011	B – 5
93109–08M07	B – 4
93210–03119	B – 10
	B – 14
	F – 3
93210–17001	C – 6
93210–17MA4	C – 4
	E – 15
93210–19MJ4	C – 13
	F – 2
93210–464A3	C – 11
93210–46M16	E – 15
93306–205U0	C – 10
93306–205U6	C – 13
93306–208U1	B – 5
93306–304U1	C – 10
93306–308U1	B – 5
93310–422U2	B – 5
93310–627U6	B – 5
93390–000U6	B – 5
93410–08M12	B – 4
93430–47M04	C – 13
93440–25M08	D – 2
93450–18M06	D – 2
93603–10049	B – 5
93606–12019	B – 2
	C – 4
	C – 10

PART NO.	GRID NO.
93606–12019	C – 13
93606–14081	C – 5
93608–16M16	C – 15
94702–00396	D – 4
94709–00396	D – 4
9531P–16700	C – 10
95380–06700	D – 2
9538R–06600	C – 14
9538R–06700	C – 11
	D – 7
	E – 6
9538R–08600	C – 14
95720–06300	E – 9
9572R–05300	D – 6
	D – 10
9572R–06300	D – 7
	D – 8
	D – 11
	D – 13
	E – 4
	E – 6
	E – 9
9572R–08300	D – 8
	D – 10
	D – 13
	E – 9
9572R–10300	C – 12
	D – 13
97013–06016	D – 5
97013–06025	B – 7
97013–06040	B – 2
97013–06045	B – 7
97013–08025	B – 3
	D – 2
97013–10055	C – 4
	C – 15
97013–10060	C – 5
97013–10065	C – 5
97080–08030	E – 9
97080–10025	D – 13
9708R–06030	D – 7
97095–06010	D – 3
97095–06012	B – 11
	B – 15
	C – 3
	D – 4
97095–06020	C – 2
97513–05514	C – 15

PART NO.	GRID NO.
97513–06525	B – 4
97513–10545	C – 6
	C – 15
97513–10585	C – 5
97513–10590	C – 5
97780–04110	D – 15
97780–50514	C – 12
97780–60425	D – 3
97780–60430	D – 3
97780–60516	D – 4
97780–60525	D – 4
97780–60530	D – 3
97880–03008	E – 8
97880–05010	B – 10
	B – 14
97880–05025	E – 8
97880–06065	E – 5
9788R–05025	D – 10
98580–05014	B – 10
	B – 14
98580–05025	E – 8
98780–05020	B – 4
9878R–05512	C – 11
98980–04008	C – 9
98980–04010	E – 5
99590–14016	C – 6
	C – 10

PART NO.	GRID NO.

PART NO.	GRID NO.