YAMAHA

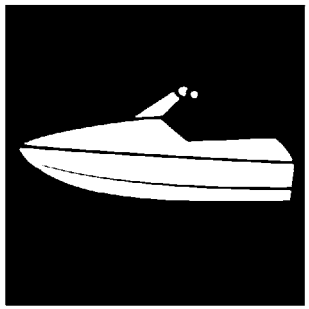

PARTS CATALOGUE

WaveRunner VX110 Deluxe/Sport

VX1100A-E (F1K8/6D3F/6D32)

VX1100-E (F1KB/6D3G/6D31)

1EF1K-300E1

(2EF1K-300E1)

YAMAHA GENUINE Parts & Accessories

2014/2/25

NEWS NO.	DATE	COMMENT
PE0-WV-060007	Aug.,28,2006	PARTS CATALOGUE LIST/ILLUSTRATION CORRECTION
PE0-WV-080004	Mar.,17,2008	FIG.15 STARTING MOTOR LIST/ILLUST REVISION
PE0-WV-090004	Feb.,18,2009	IMPORTANT LABELS LIST CORRECTION
PE0-WV-090006	Feb.,18,2009	IMPORTANT LABELS LIST CORRECTION
PE0-WV-090011	July,28,2009	MOD: ELECTRICAL 1 RECTIFIER & REGULATOR ASSY LIST REVISION
PE0-WV-140001	Feb.,6,2014	COR:FIG.11 JET UNIT 1 ILLUST. CORRECTUION

VX1100A-E/VX1100-E
PARTS CATALOGUE
©2005 by Yamaha Motor Co., Ltd.
1st edition, December 2005
All rights reserved.
Any reprinting or unauthorized use
without the written permission of
Yamaha Motor Co., Ltd.
is expressly prohibited.

A2

VX-1100 Sport

VX-1100A Deluxe (RED)

VX-1100A Deluxe (BLUE)

FOREWORD

This Parts Catalogue is related to the parts for the model(s) on the cover page. When you are ordering replacement parts, please refer to this Parts Catalogue and quote both part numbers and part names correctly.

1. Modifications or additions which have been made after the issue of the Parts Catalogue will be announced in the Parts News.
   It is advisable that you make the necessary corrections to the Parts Catalogue according to the Parts News.

2. Abbreviations
   The following abbreviations are used in this Parts Catalogue.

   "UR" Use specified parts number.
   "UN" Use as many as needed.
   "AP" Alternate Parts
   "LM" Locally Made (Parts need to be ordered locally)
   "F#" Frame No. (Applicable machine No.)
   "O/S" Over Size

3. The number of components for assembly
   - Parts, which are to be supplied in an assembly, are listed with a dot (.) in front of the part name as shown below.
   - The numeral appearing to the right of each component part indicates the quantity of parts for each assembly unit.

PART NO.	DESCRIPTION	Q'TY	REMARKS
2F5–83310–60	FRONT FLASHER LIGHT ASSY	2	
115–83311–60	.BULB (6V–18W)	1	

4. Applicable colours of graphics are represented in the "REMARKS" as shown below.

PART NO.	DESCRIPTION	Q'TY	REMARKS
2N4–24110–00–X5	FUEL TANK COMP.	2	MXR
3J1–24240–10	.GRAPHIC, FUEL TANK	1	FOR MXR

5. Note that the illustrations for reference in finding parts numbers are not to be used for assembling. When assembling, please use the applicable service manual.

6. The asterisk (*) before a reference number indicates modified items after the first edition.

7. Applicable Serial No.

Engine Serial No.

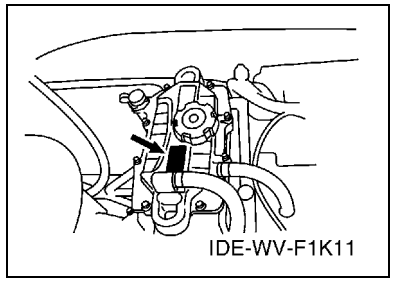

Hull Serial No.

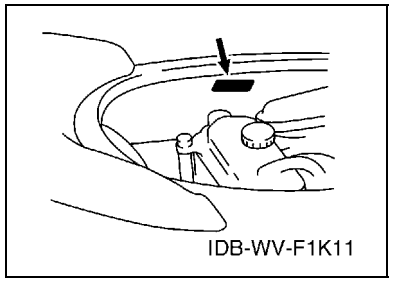

8. Applicable Colour Code (The (*) mark shows Model colour.)

Abbreviation	Colour Name	Colour Code
PURW(*)	PURE WHITE	0240
SS4(*)	BLACK SOLID 4	008P
SSA(*)	BLACK SOLID A	1000
VPBM6	VIVID PURPLISH BLUE METALLIC 6	1002
RM4	RED METALLIC 4	0923
DPBMT	DEEP PURPLISH BLUE METALLIC T	0978

9. Quantity Column Information

Column No.	Name Of Q'ty Column	Destination
1	GENE	GENERAL

10. Applicable Starting Serial No.

Engine Serial No.

Serial No.	Name Of Q'ty Column	Model Code
6D3-1013501	GENE	6D3F
6D3-1013501	GENE	6D3G

Hull Serial No.

Serial No.	Name Of Q'ty Column	Model Code
F1K-819601	GENE	F1KB
F1K-819701	GENE	F1K8

CONTENTS

SHEET1/2
CYLINDER A7
CRANKCASE B2
CRANKSHAFT & PISTON B4
VALVE B6
INTAKE C1
INTAKE 2 ..... C2
OIL PUMP C3
OIL COOLER C5
EXHAUST 1 ..... C7
EXHAUST 2 ..... D2
JET UNIT 1 ..... D4
JET UNIT 2 ..... D6
JET UNIT 3 ..... D7
GENERATOR E1
STARTING MOTOR E2
ELECTRICAL 1 ..... E3
ELECTRICAL 2 ..... E5
ELECTRICAL 3 ..... E6
ENGINE HATCH 1 ..... F1
ENGINE HATCH 2 ..... F2
HULL & DECK F3
GUNWALE & MAT F5
VENTILATION F6
SEAT & UNDER LOCKER F7

INDEX

NUMERICAL INDEX G1

SHEET2/2
FUEL TANK A7*
EXHAUST 3 ..... B2*
CONTROL CABLE B3*
STEERING 1 ..... B5*
STEERING 2 ..... B7*
GRAPHICS C1*
IMPORTANT LABELS C3*
REPAIR KIT 1 ..... C4*

INDEX

NUMERICAL INDEX G1*

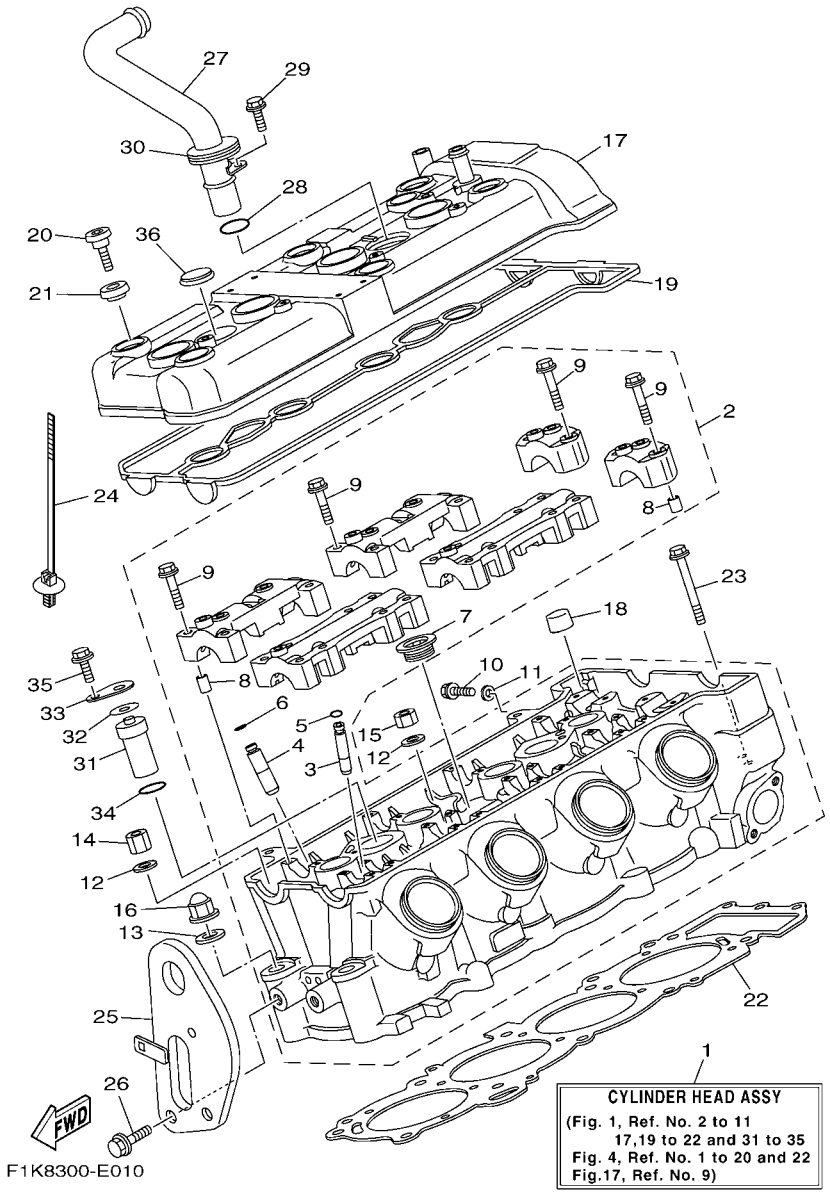

FIG. 1 CYLINDER

REF. NO.	PART NO.	DESCRIPTION	GENE					REMARKS
1	6D3–W009A–10–94	CYLINDER HEAD ASSY	1					
2	6D3–11102–00–94	CYLINDER HEAD ASSY	1					
3	3TJ–11133–10	.GUIDE, VALVE	12					
4	1WG–11133–11	.GUIDE, VALVE	8					
5	93440–07149	.CIRCLIP	12					
6	93440–10153	.CIRCLIP	8					
7	90340–27001	.PLUG, STRAIGHT SCREW	1					
8	91808–16023	.PIN, DOWEL	12					
9	90105–06026	.BOLT, FLANGE	28					
10	95023–06012	BOLT	1					
11	90430–06014	GASKET	1					
12	90201–10013	WASHER, PLATE	8					
13	90201–10019	WASHER, PLATE	2					
14	90179–10006	NUT	3					
15	90179–10414	NUT	5					
16	90176–10001	NUT, CROWN	2					
17	6D3–11191–00–94	COVER, CYLINDER HEAD 1	1					
18	6D3–1118A–00	COVER	1					
19	60E–11193–01	GASKET, HEAD COVER 1	1					
20	90109–066F0	BOLT	6					
21	4KG–1111G–00	RUBBER, MOUNT 1	6					
22	6D3–11181–00	GASKET, CYLINDER HEAD 1	1					
23	97513–06555	BOLT, WITH WASHER	3					
24	90464–31001	CLAMP	1					
25	6D3–85132–00	BRACKET, REFLECTOR 1	1					
26	97513–08520	BOLT, WITH WASHER	2					
27	6D3–12482–00	PIPE 2	1					

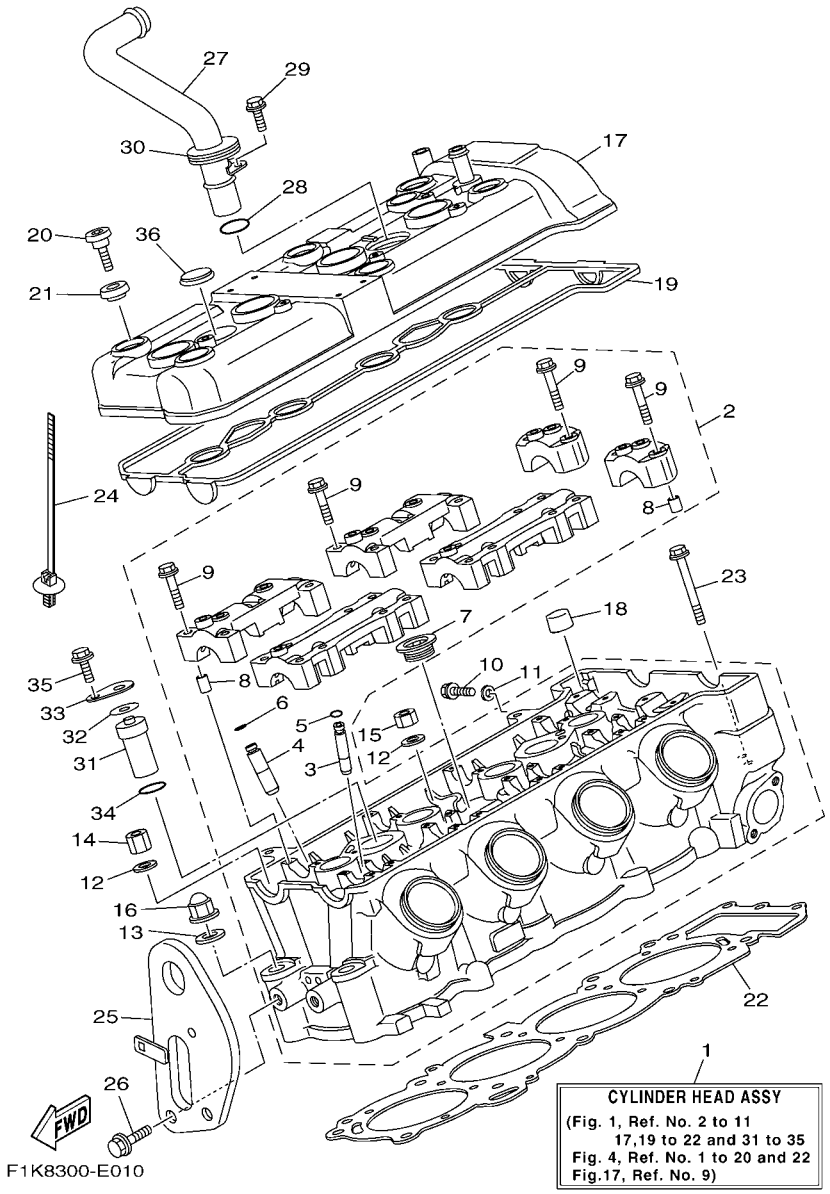

FIG. 1 CYLINDER

REF. NO.	PART NO.	DESCRIPTION	GENE					REMARKS
28	93210–18417	O-RING	1					
29	91317–06016	BOLT	1					
30	60E–12494–00	SEAL, PIPE 1	1					
31	60E–12483–10	PIPE 3	1					
32	60E–12474–00	GASKET 1	1					
33	60E–12537–00	PLATE 2	1					
34	93210–18417	O-RING	1					
35	91317–06016	BOLT	1					
36	60E–12495–00	SEAL, PIPE 2	1					

FIG. 2 CRANKCASE

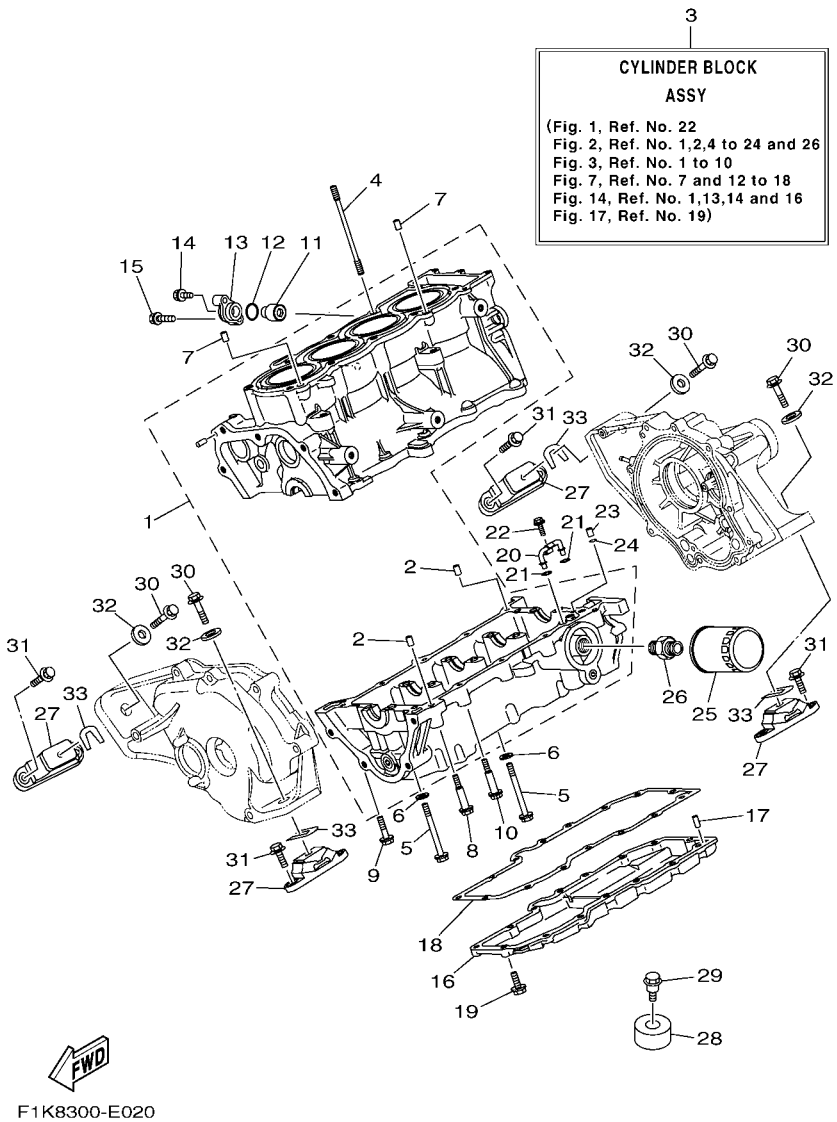

REF. NO.	PART NO.	DESCRIPTION	GENE					REMARKS
1	6D3–15100–00–94	CRANKCASE ASSY	1					
2	99530–10014	.PIN, DOWEL	2					
3	6D3–W009B–00–94	CYLINDER BLOCK ASSY	1					
4	90116–10619	BOLT, STUD	10					
5	90105–093A5	BOLT, FLANGE	10					
6	90201–096J9	WASHER, PLATE	10					
7	99530–10014	PIN, DOWEL	2					
8	90109–06051	BOLT	2					
9	90105–06033	BOLT, FLANGE	1					
10	90105–06M17	BOLT, FLANGE	7					
11	68V–11325–02	ANODE	1					
12	67F–11328–00	GROMMET, ANODE	1					
13	69J–11327–01–94	COVER, ANODE	1					
14	97595–06520	BOLT, WITH WASHER	1					
15	97595–08540	BOLT, WITH WASHER	1					
16	6B6–1310A–00–94	PAN, OIL	1					
17	93603–14M15	PIN, DOWEL	2					
18	6B6–13557–01	GASKET	1					
19	97513–06520	BOLT, WITH WASHER	15					
20	60E–13161–00	PIPE, DELIVERY 1	1					
21	93210–06667	O-RING	2					
22	95027–06010	BOLT, FLANGE	1					
23	99530–08012	PIN, DOWEL	1					
24	93210–08001	O-RING	1					
25	5GH–13440–00	ELEMENT ASSY, OIL CLEANER	1					
26	90401–20145	BOLT, UNION	1					
27	67X–44517–10–94	MOUNT RUBBER	4					

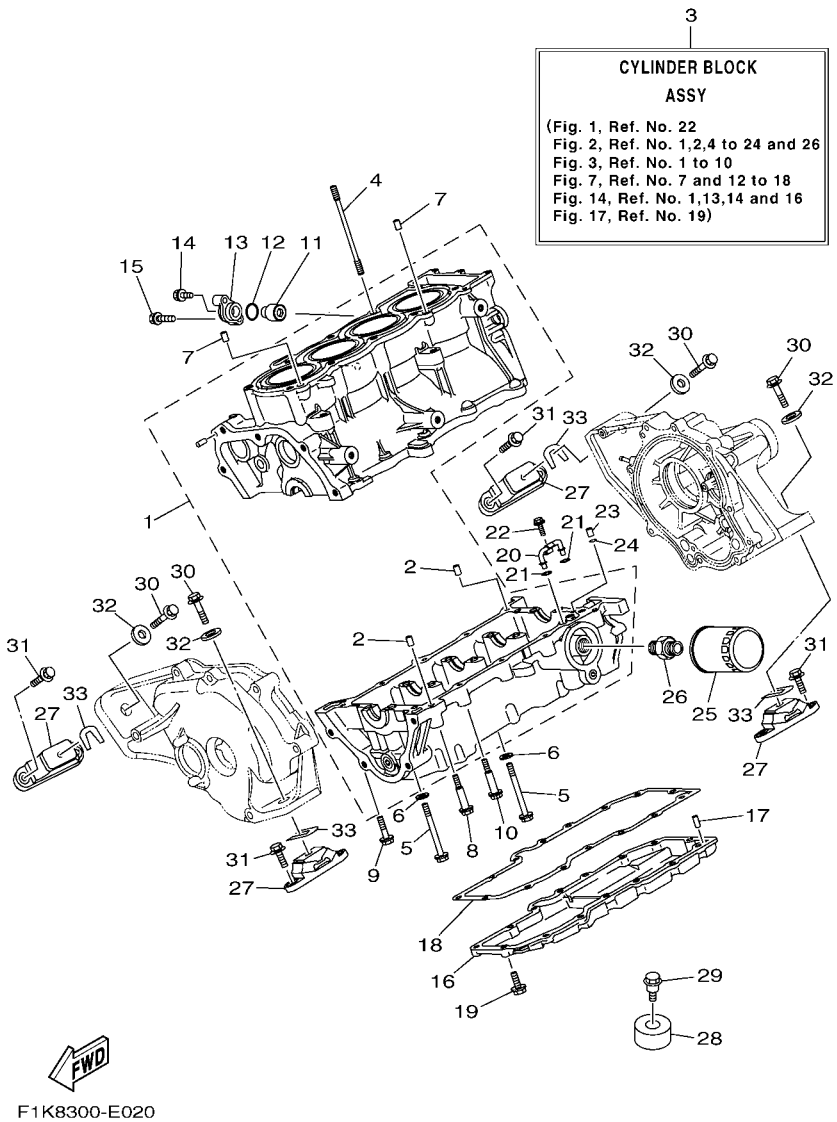

FIG. 2 CRANKCASE

REF. NO.	PART NO.	DESCRIPTION	GENE					REMARKS
28	6D3–44574–00	STOPPER LWR MOUNT RUBBER	2					
29	90109–06M92	BOLT	2					
30	90119–089UR	BOLT, WITH WASHER	4					
31	90119–08823	BOLT, WITH WASHER	8					
32	90201–099U3	WASHER, PLATE	4					
33	EU0–U7354–00–01	SHIM (T=0.1)	4					UR
	EU0–U7354–00–03	SHIM (T=0.3)	4					UR
	EU0–U7354–00–05	SHIM (T=0.5)	4					UR
	EU0–U7354–00–10	SHIM (T=1.0)	4					UR
	EU0–U7354–00–20	SHIM (T=2.0)	4					UR

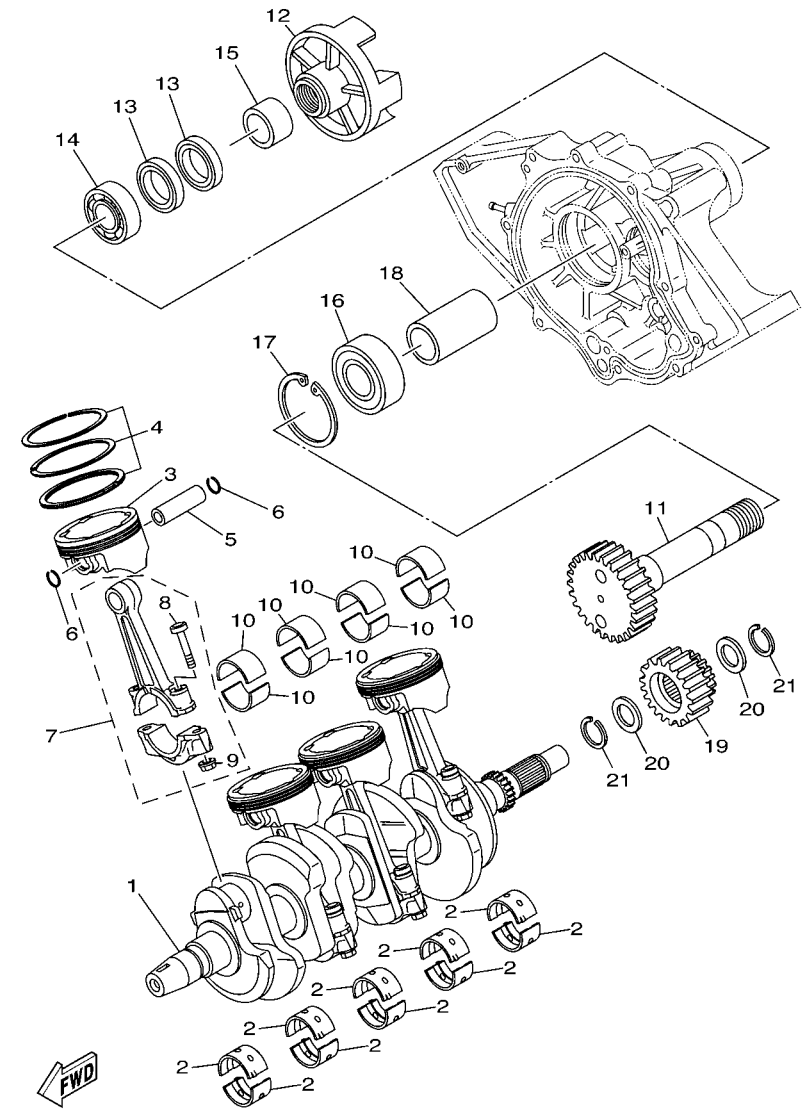

F1K1100-D030

FIG. 3 CRANKSHAFT & PISTON

REF. NO.	PART NO.	DESCRIPTION	GENE					REMARKS
1	60E–11411–11	CRANKSHAFT	1					
2	6D3–11416–A0	PLANE BEARING, CRANKSHAFT 1	10					UR RED
	6D3–11416–00	PLANE BEARING, CRANKSHAFT 1	10					UR BROWN
	6D3–11416–10	PLANE BEARING, CRANKSHAFT 1	10					UR BLACK
	6D3–11416–20	PLANE BEARING, CRANKSHAFT 1	10					UR BLUE
	6D3–11416–30	PLANE BEARING, CRANKSHAFT 1	10					UR GREEN
3	6D3–11631–00–B0	PISTON (STD)	4					
4	6D3–11603–00	PISTON RING SET (STD)	4					
5	6D3–11633–00	PIN, PISTON	4					
6	90468–12069	CLIP	8					
7	6D3–11650–00	CONNECTING ROD ASSY	4					
8	5JW–11654–00	.BOLT, CONNECTING ROD	2					
9	90179–08327	.NUT	2					
10	60E–11656–00	PLANE BEARING, CONNECTING ROD	8					UR BROWN
	60E–11656–10	PLANE BEARING, CONNECTING ROD	8					UR BLACK
	60E–11656–20	PLANE BEARING, CONNECTING ROD	8					UR BLUE
	60E–11656–30	PLANE BEARING, CONNECTING ROD	8					UR GREEN
11	6D3–17572–00	SHAFT, TRANSFER	1					
12	6D3–45813–00–94	FLANGE, COUPLING	1					
13	93101–35004	OIL SEAL	2					
14	93306–07801	BEARING	1					
15	6B6–11478–00	COLLAR	1					
16	93306–30610	BEARING	1					
17	99009–72500	CIRCLIP	1					
18	6B6–17585–00	COLLAR, GEAR	1					
19	6B6–17586–00	GEAR, TRANSFER DRIVE	1					
20	90209–25008	WASHER	2					

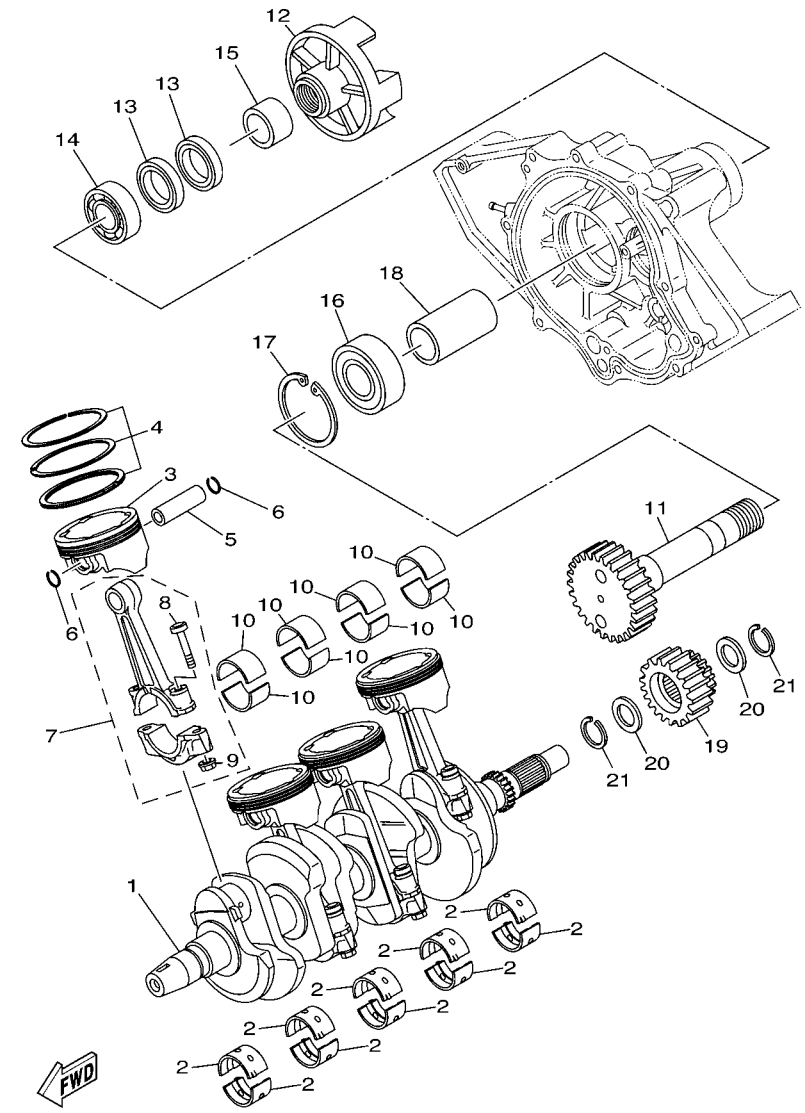

F1K1100-D030

FIG. 3 CRANKSHAFT & PISTON

REF. NO.	PART NO.	DESCRIPTION	GENE					REMARKS
21	93440–28062	CIRCLIP	2					

FIG. 4 VALVE

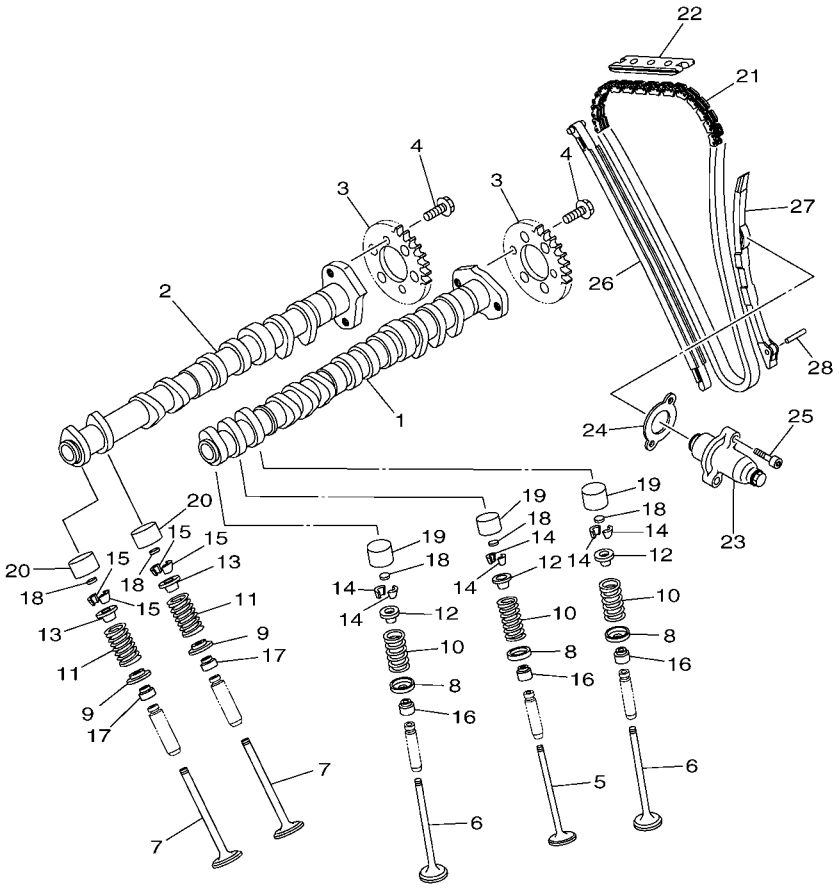

REF. NO.	PART NO.	DESCRIPTION	GENE					REMARKS
1	6D3–12171–10	CAMSHAFT 1	1					
2	6D3–12181–00	CAMSHAFT 2	1					
3	6D3–12176–00	SPROCKET, CAM CHAIN	2					
4	90105–07004	BOLT, FLANGE	4					
5	4XV–12111–00	VALVE, INTAKE	4					
6	4XV–12112–00	VALVE, INTAKE 2	8					
7	5LV–12121–00	VALVE, EXHAUST	8					
8	1HX–12116–01	SEAT, VALVE SPRING	12					
9	3GM–12126–00	SEAT, VALVE SPRING 2	8					
10	4XV–12113–00	SPRING, VALVE INNER	12					
11	4XV–12114–00	SPRING, VALVE OUTER	8					
12	1HX–12117–00	RETAINER, VALVE SPRING	12					
13	1WG–12117–00	RETAINER, VALVE SPRING	8					
14	1HX–12118–00	COTTER, VALVE	24					
15	1WG–12118–00	COTTER, VALVE	16					
16	4TV–12119–00	SEAL, VALVE STEM	12					
17	4SV–12119–00	SEAL, VALVE STEM	8					
18	1HX–12168–00	PAD, ADJUSTING 2 (1.20)	20					UR
	1HX–12168–20	PAD, ADJUSTING 2 (1.25)	20					UR
	1HX–12168–40	PAD, ADJUSTING 2 (1.30)	20					UR
	1HX–12168–60	PAD, ADJUSTING 2 (1.35)	20					UR
	1HX–12168–80	PAD, ADJUSTING 2 (1.40)	20					UR
	1HX–12168–A0	PAD, ADJUSTING 2 (1.45)	20					UR
	1HX–12168–F0	PAD, ADJUSTING 2 (1.50)	20					UR
	1HX–12168–H1	PAD, ADJUSTING 2 (1.55)	20					UR
	1HX–12168–K1	PAD, ADJUSTING 2 (1.60)	20					UR
	1HX–12168–M1	PAD, ADJUSTING 2 (1.65)	20					UR

FIG. 4 VALVE

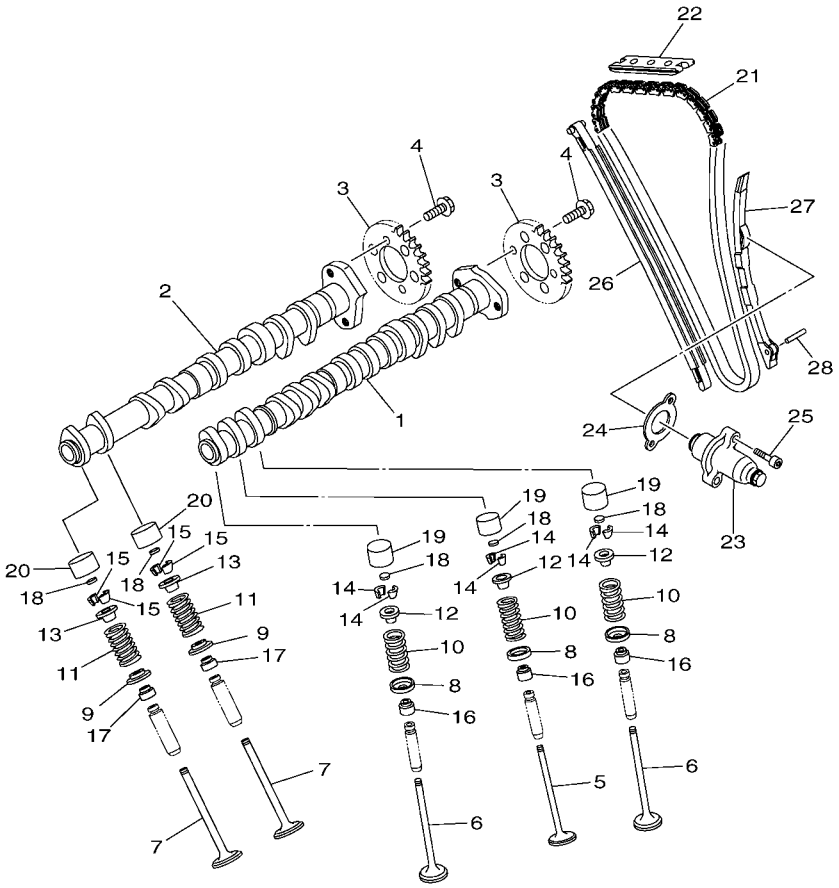

REF. NO.	PART NO.	DESCRIPTION	GENE					REMARKS
18	1HX–12168–R1	PAD, ADJUSTING 2 (1.70)	20					UR
	1HX–12168–U1	PAD, ADJUSTING 2 (1.75)	20					UR
	1HX–12168–W1	PAD, ADJUSTING 2 (1.80)	20					UR
	1HX–12168–Y1	PAD, ADJUSTING 2 (1.85)	20					UR
	1HX–12169–11	PAD, ADJUSTING 2 (1.90)	20					UR
	1HX–12169–31	PAD, ADJUSTING 2 (1.95)	20					UR
	1HX–12169–50	PAD, ADJUSTING 2 (2.00)	20					UR
	1HX–12169–70	PAD, ADJUSTING 2 (2.05)	20					UR
	1HX–12169–90	PAD, ADJUSTING 2 (2.10)	20					UR
	1HX–12169–E0	PAD, ADJUSTING 2 (2.15)	20					UR
	1HX–12169–G0	PAD, ADJUSTING 2 (2.20)	20					UR
	1HX–12169–J0	PAD, ADJUSTING 2 (2.25)	20					UR
	1HX–12169–L0	PAD, ADJUSTING 2 (2.30)	20					UR
	1HX–12169–N0	PAD, ADJUSTING 2 (2.35)	20					UR
	1HX–12169–T0	PAD, ADJUSTING 2 (2.40)	20					UR
19	3LN–12153–10	LIFTER, VALVE	12					YELLOW
20	3FV–12153–10	LIFTER, VALVE	8					YELLOW
21	94591–49130	CHAIN	1					
22	5BE–12241–00	GUIDE, STOPPER 2	1					
23	6D3–12210–00	TENSIONER ASSY, CAM CHAIN	1					
24	4FM–12213–00	GASKET, TENSIONER CASE	1					
25	91380–06025	BOLT	2					
26	6D3–12251–00	DAMPER, CHAIN 1	1					
27	4XV–12252–00	DAMPER, CHAIN 2	1					
28	93607–54002	PIN, DOWEL	1					

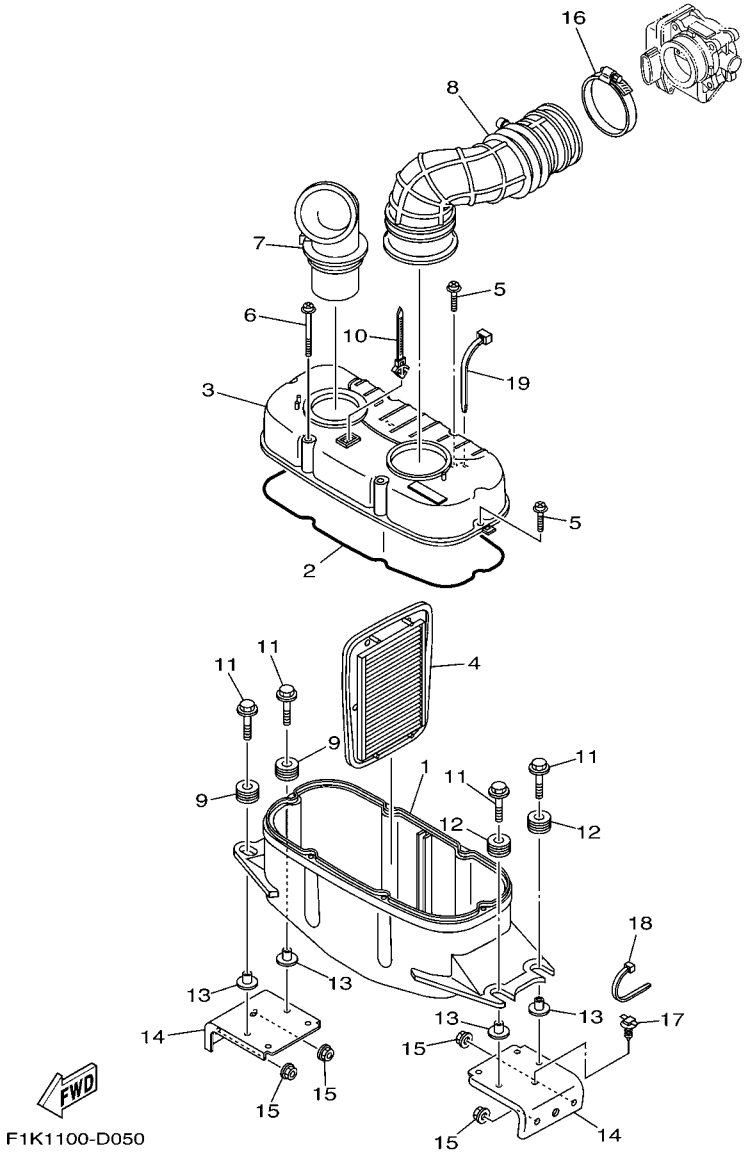

FIG. 5 INTAKE

REF. NO.	PART NO.	DESCRIPTION	GENE					REMARKS
1	6D3–14411–00	CASE, AIR CLEANER 1	1					
2	4XV–14452–00	SEAL	1					
3	6D3–14421–00	CASE, AIR CLEANER 2	1					
4	6D3–14451–00	ELEMENT, AIR CLEANER	1					
5	90159–05013	SCREW, WITH WASHER	4					
6	90159–05014	SCREW, WITH WASHER	2					
7	6D3–14437–00	DUCT	1					
8	6D3–14419–00	PIPE	1					
9	90480–22M15	GROMMET	2					
10	90464–12089	CLAMP	1					
11	90119–08M22	BOLT, WITH WASHER	4					
12	90480–22M15	GROMMET	2					
13	6D3–14495–00	COLLAR	4					
14	F1K–U8572–02	BRACKET 2	2					
15	9572R–08300	NUT, FLANGE	4					
16	90601–175UR	BAND, HOSE 75	1					
17	F1K–U043H–00	CLAMP,CABLE	1					
18	90464–40825	CLAMP	1					
19	90464–40825	CLAMP	2					

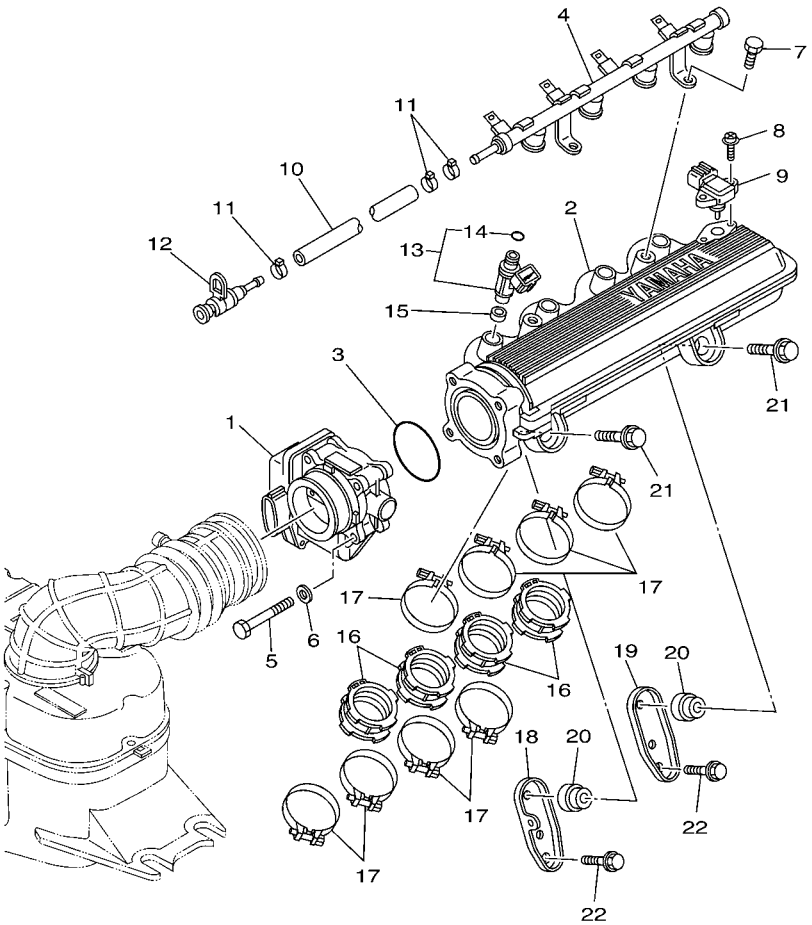

F1K1100-D060

FIG. 6 INTAKE 2

REF. NO.	PART NO.	DESCRIPTION	GENE					REMARKS
1	6D3–13750–00	THROTTLE BODY ASSY	1					
2	6D3–13641–00	MANIFOLD 1	1					
3	6D3–14457–00	SEAL	1					
4	6D3–12880–00	DELIVERY PIPE	1					
5	68V–13573–00	BOLT 1	4					
6	68V–14475–00	WASHER	4					
7	63P–14446–00	BOLT	2					
8	68V–81147–00	SCREW 3	2					
9	68F–83688–00	SENSOR ASSY	1					
10	6D3–14294–00	HOSE (L600)	1					
11	90450–17M17	HOSE CLAMP ASSY	3					
12	60E–24300–01	FUEL PIPE JOINT	1					
13	60E–13761–10	INJECTOR ASSY	4					
14	60E–14147–00	.O-RING	1					
15	90430–09002	GASKET	4					
16	6D3–13795–01	JOINT, THROTTLE BODY 1	4					Go to P/N : PE0-WV-060007
17	90450–57006	HOSE CLAMP ASSY	8					
18	6D3–14413–00	STAY	1					
19	6D3–14414–00	STAY 2	1					
20	60E–14449–00	COLLAR	2					
21	90119–08050	BOLT, WITH WASHER	2					
22	90119–08074	BOLT, WITH WASHER	2					

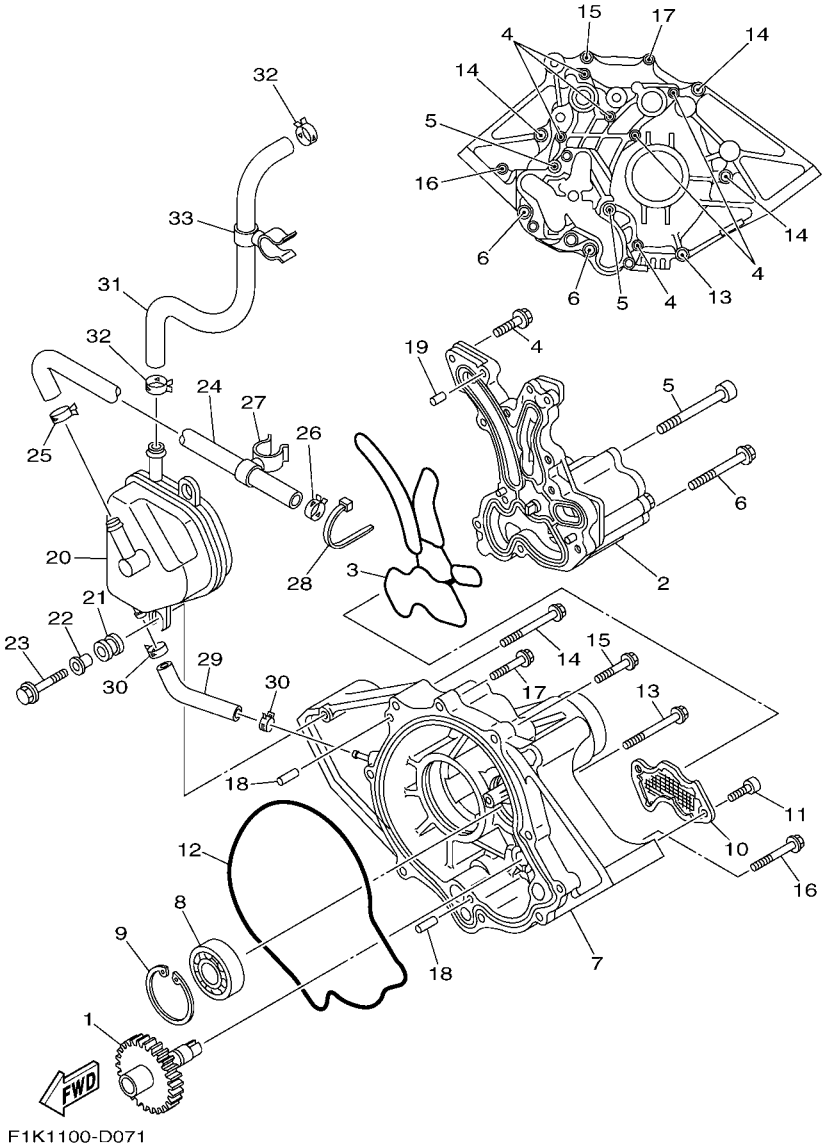

FIG. 7 OIL PUMP

REF. NO.	PART NO.	DESCRIPTION	GENE					REMARKS
1	6B6–13360–00	DRIVEN GEAR ASSY	1					
2	6D3–13300–01	OIL PUMP ASSY	1					
3	6D3–13563–00	GASKET	1					
4	97513–06525	BOLT, WITH WASHER	6					
5	90110–08041	BOLT, HEXAGON SOCKET HEAD	2					
6	90119–08085	BOLT, WITH WASHER	2					
7	6B6–13327–01–94	COVER, PUMP GEAR	1					
8	93306–30441	BEARING	1					
9	99009–52500	CIRCLIP	1					
10	6B6–13411–00	STRAINER, OIL	1					
11	91317–06016	BOLT	2					
12	6B6–13475–00	GASKET	1					
13	90119–08045	BOLT, WITH WASHER	1					
14	90119–08034	BOLT, WITH WASHER	3					
15	90119–08043	BOLT, WITH WASHER	1					
16	97513–06555	BOLT, WITH WASHER	1					
17	97513–06535	BOLT, WITH WASHER	1					
18	93608–16M16	PIN, DOWEL	2					
19	93606–25M00	PIN, DOWEL	2					
20	6D3–11164–00	SEPERATOR, OIL	1					
21	6A0–82317–00	DAMPER, IGNITION COIL	2					
22	90387–06119	COLLAR	2					
23	90119–06M65	BOLT, WITH WASHER	2					
24	6D3–11126–00	PIPE, BREATHER 3	1					
25	90467–170A0	CLIP	1					
26	90467–170A0	CLIP	1					
27	90464–21001	CLAMP	1					

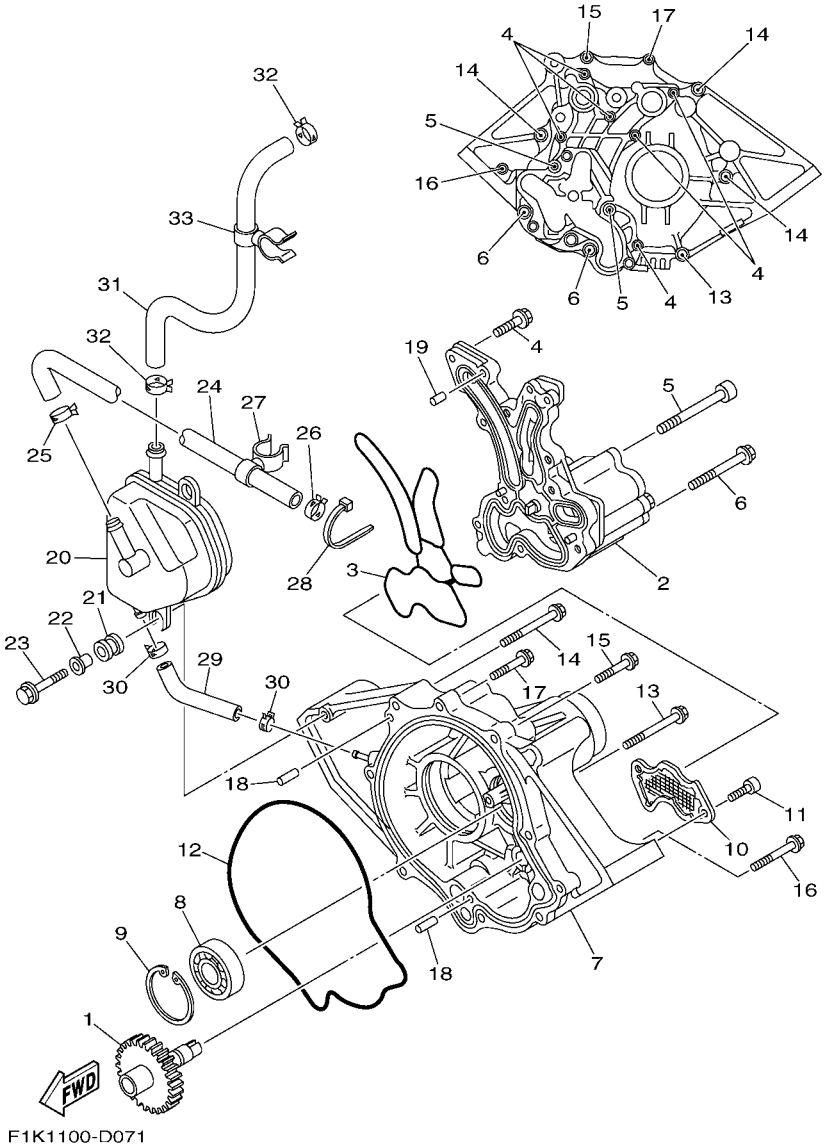

FIG. 7 OIL PUMP

REF. NO.	PART NO.	DESCRIPTION	GENE					REMARKS
28	90464–18006	CLAMP	1					
29	6D3–11125–00	PIPE, BREATHER 4	1					
30	90467–110A1	CLIP	2					
31	6D3–11166–00	PIPE, BREATHER 1	1					
32	90467–170A0	CLIP	2					
33	90464–21001	CLAMP	1					

FIG. 8 OIL COOLER

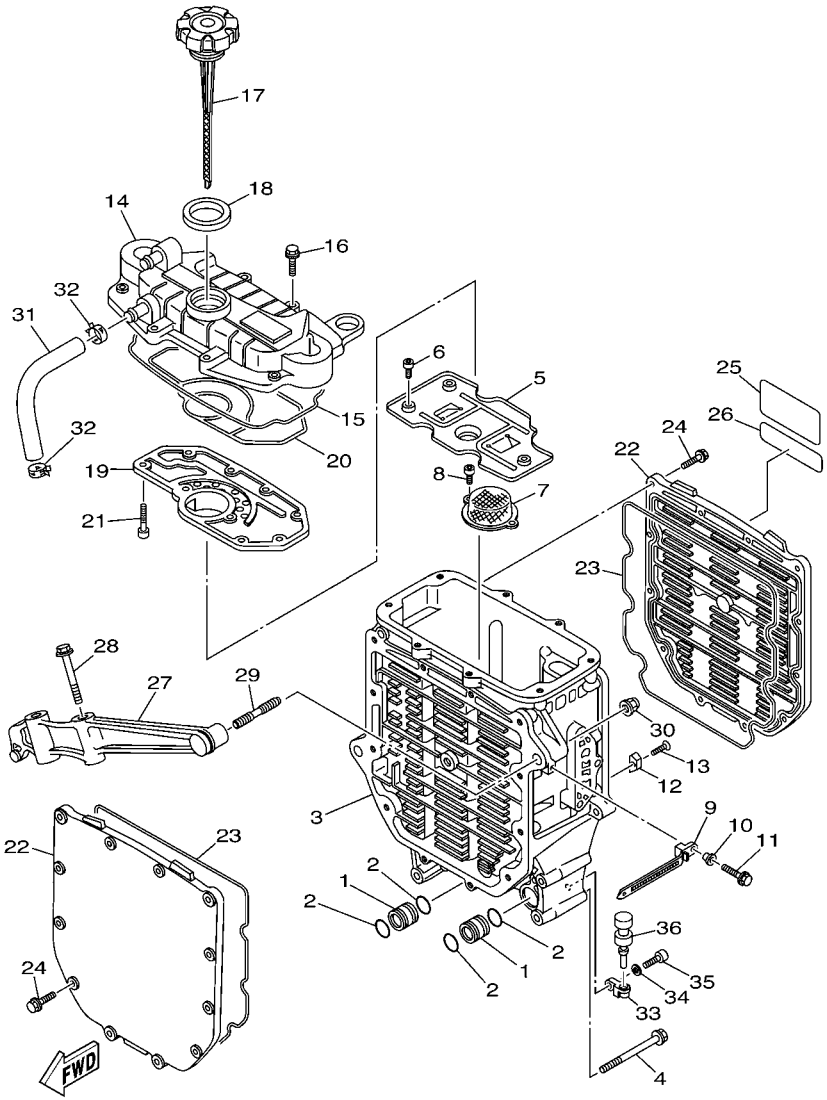

F1K1100-D080

REF. NO.	PART NO.	DESCRIPTION	GENE					REMARKS
1	60E–13446–00	CONNECTOR	2					
2	93210–18322	O-RING	4					
3	6D3–13462–00–94	CASE, OIL COOLER	1					
4	90119–10020	BOLT, WITH WASHER	5					
5	6B6–13317–00	PLATE, BAFFLE	1					
6	91317–05014	BOLT	3					
7	60E–13421–00	STRAINER 2	1					
8	91317–06014	BOLT	2					
9	90465–12M53	CLAMP	1					
10	90387–06M05	COLLAR	1					
11	97595–06520	BOLT, WITH WASHER	1					
12	6E5–11325–00	ANODE	1					
13	98780–04015	SCREW, FLAT HEAD	1					
14	6D3–13463–00–94	COVER, OIL COOLER	1					
15	60E–13475–00	GASKET	1					
16	90105–06036	BOLT, FLANGE	8					
17	60E–15362–00	PLUG, OIL LEVEL	1					
18	60E–13473–00	O-RING	1					
19	6D3–11165–00	PLATE, BREATHER	1					
20	6D3–13477–00	GASKET	1					
21	91317–05016	BOLT	9					
22	6D3–13443–00–94	COVER, OIL COOLER	2					
23	60E–13476–10	GASKET	2					
24	90105–06M07	BOLT, FLANGE	24					
25	6B6–83623–00	MARK 3	1					
26	60E–83627–00	LABEL, CAUTION 7	1					
27	6B6–13151–00–94	STAY	1					

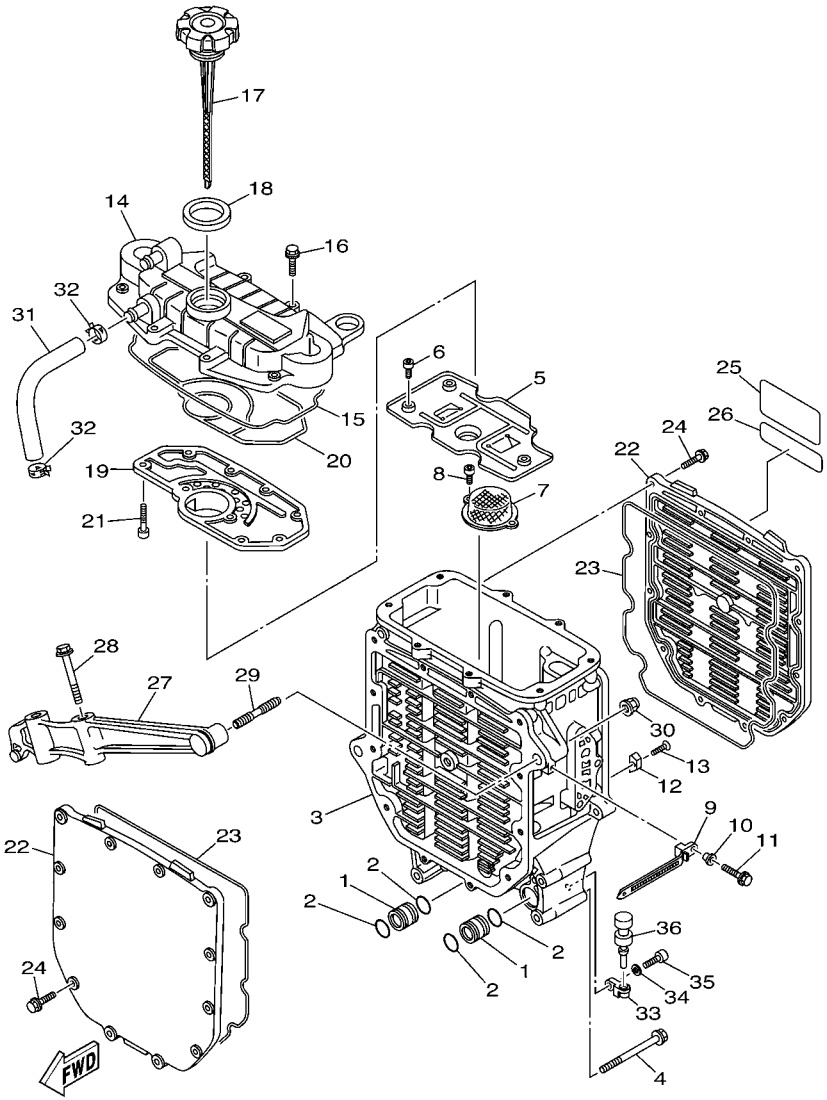

FIG. 8 OIL COOLER

REF. NO.	PART NO.	DESCRIPTION	GENE					REMARKS
28	90119–10M02	BOLT, WITH WASHER	2					
29	90116–10016	BOLT, STUD	2					
30	90176–10001	NUT, CROWN	2					
31	6D3–11167–00	PIPE, BREATHER 2	1					
32	90467–170A0	CLIP	2					
33	60E–51341–00–94	BRACKET 1	2					
34	92995–06600	WASHER	2					
35	91380–06020	BOLT	2					
36	90480–06M46	GROMMET	2					

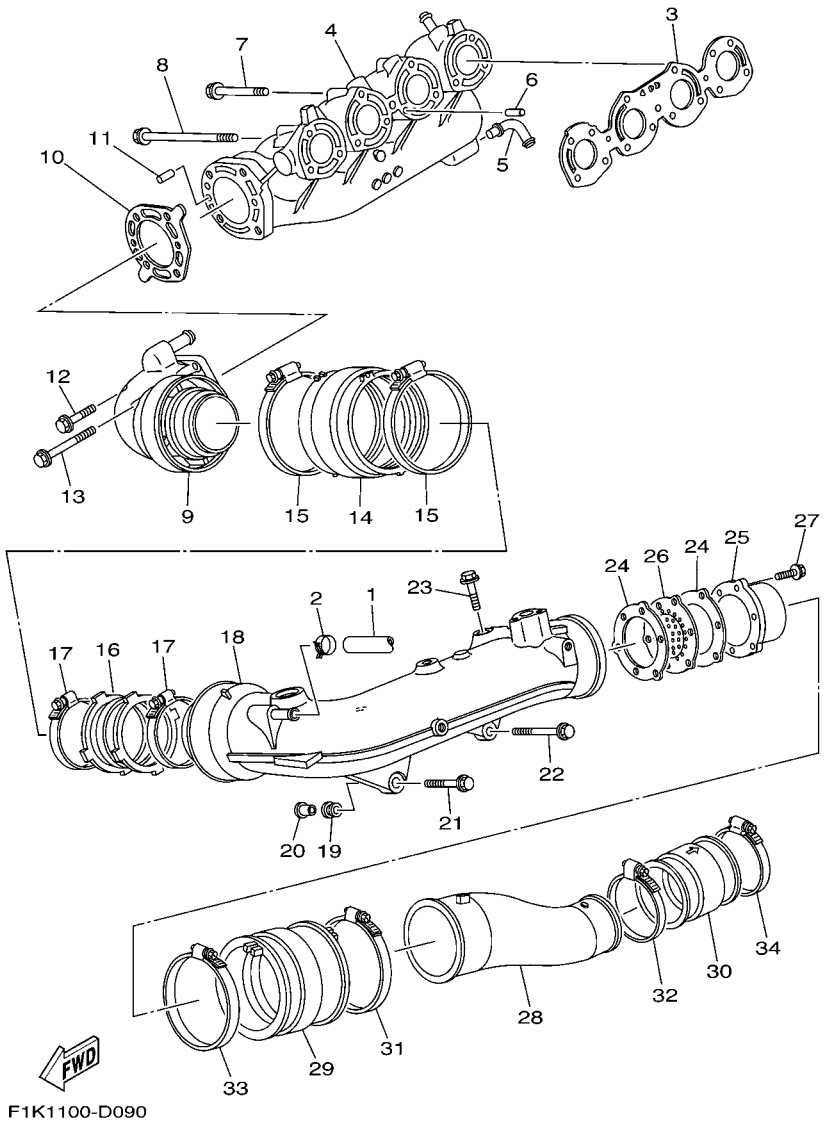

FIG. 9 EXHAUST 1

REF. NO.	PART NO.	DESCRIPTION	GENE					REMARKS
1	90445–16005	HOSE (L870)	1					
2	90467–160A0	CLIP	1					
3	6D3–14613–00	GASKET, EXHAUST PIPE	1					
4	6D3–14711–00–94	MUFFLER 1	1					
5	60E–11372–10	NIPPLE, HOSE	1					
6	93608–16M16	PIN, DOWEL	2					
7	90119–08036	BOLT, WITH WASHER	5					
8	90119–08075	BOLT, WITH WASHER	6					
9	6D3–14712–00–94	RING, JOINT	1					
10	6D3–14739–00	GASKET, MUFFLER DAMPER 1	1					
11	93606–12019	PIN, DOWEL	2					
12	90119–08036	BOLT, WITH WASHER	2					
13	90119–08031	BOLT, WITH WASHER	2					
14	6D3–14615–00	JOINT, EXHAUST 1	1					
15	90450–99005	HOSE CLAMP ASSY	2					
16	6D3–14625–00	JOINT, EXHAUST 2	1					
17	90450–88M15	HOSE CLAMP ASSY	2					
18	6D3–14721–00–94	MUFFLER 2	1					
19	90480–21M63	GROMMET	1					
20	90387–11002	COLLAR	1					
21	90119–10011	BOLT, WITH WASHER	1					
22	90119–10017	BOLT, WITH WASHER	1					
23	90119–10013	BOLT, WITH WASHER	2					
24	60E–14623–00	GASKET, EXHAUST PIPE	2					
25	60E–14784–00–94	PIPE, TAIL	1					
26	6D3–1469W–00	PLATE, SILENCER 6	1					
27	90105–06790	BOLT, FLANGE	3					

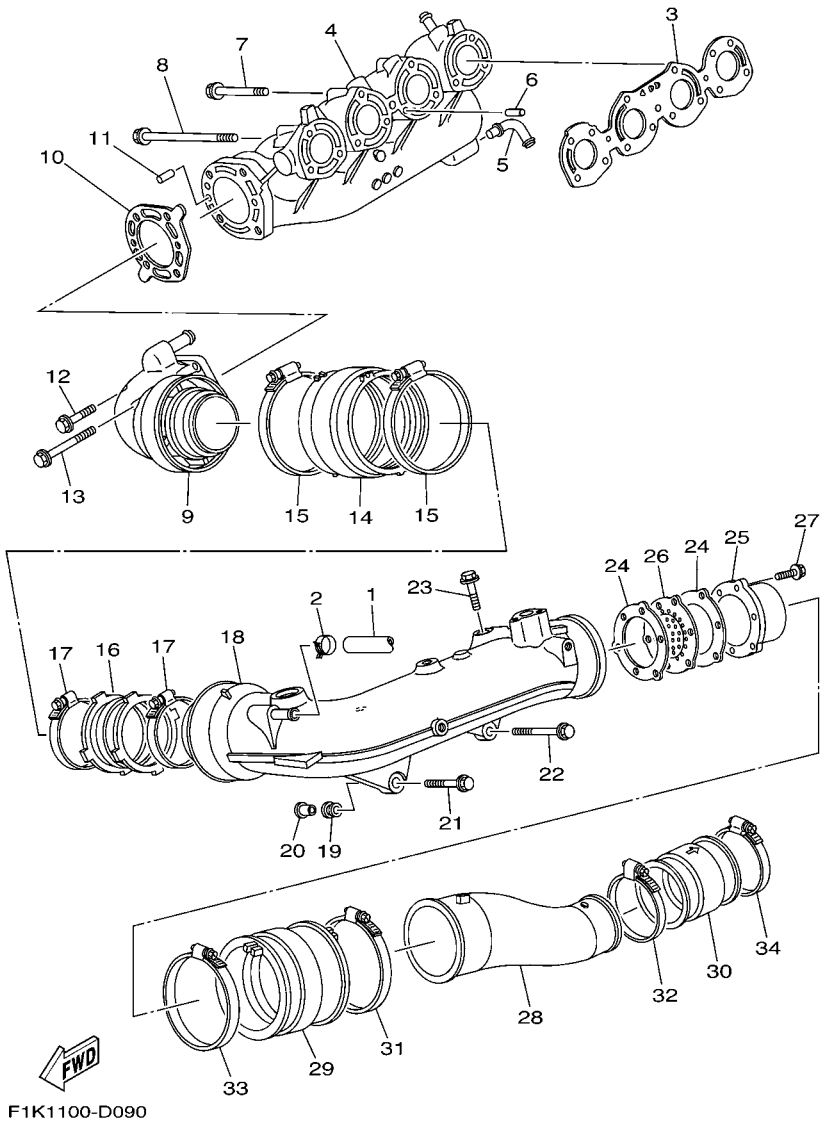

FIG. 9 EXHAUST 1

REF. NO.	PART NO.	DESCRIPTION	GENE					REMARKS
28	6D3–14752–00–94	PIPE, OUTLET	1					
29	6B6–1475E–00	PIPE 2	1					
30	6D3–1475F–00	PIPE 3	1					
31	90450–99004	HOSE CLAMP ASSY	1					
32	90450–94001	HOSE CLAMP ASSY	1					
33	90450–99004	HOSE CLAMP ASSY	1					
34	90450–94001	HOSE CLAMP ASSY	1					

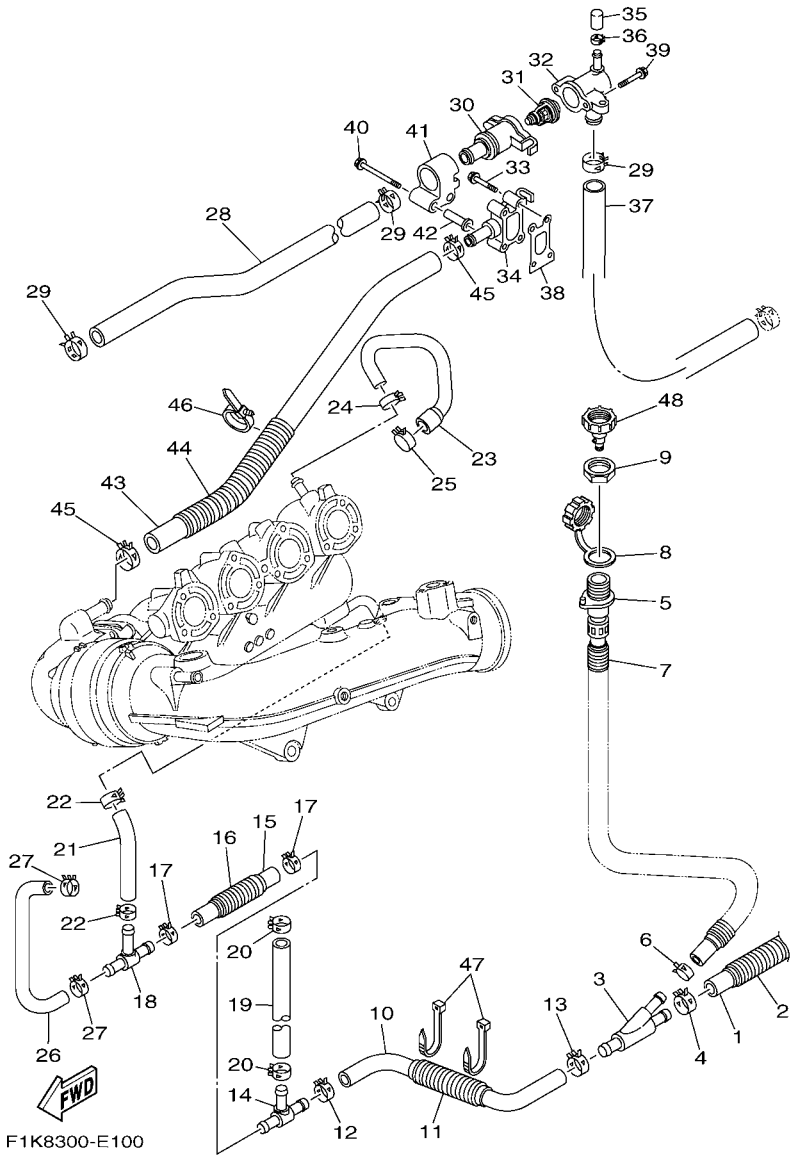

FIG. 10 EXHAUST 2

REF. NO.	PART NO.	DESCRIPTION	GENE					REMARKS
1	90445–21805	HOSE (L300)	1					
2	90447–22004	HOSE, WITH SPRING (L200)	1					
3	60E–12581–00	JOINT, HOSE 1	1					
4	90467–200A0	CLIP	1					
5	63M–12580–00	JOINT ASSY	1					
6	90467–150A0	CLIP	1					
7	90446–24M79	HOSE (L230)	1					
8	682–84385–01	CAP,1	1					
9	EU0–61652–00	NUT	1					
10	6D3–1243A–00	HOSE 1	1					
11	90447–22004	HOSE, WITH SPRING (L200)	1					
12	90467–200A0	CLIP	1					
13	90467–200A0	CLIP	1					
14	60E–12584–00	JOINT, HOSE 3	1					
15	90445–21007	HOSE (L130)	1					
16	90447–22001	HOSE, WITH SPRING (L100)	1					
17	90467–200A0	CLIP	2					
18	6D3–12584–00	JOINT, HOSE 3	1					
19	90445–18007	HOSE (L180)	1					
20	90467–160A0	CLIP	2					
21	90445–18M03	HOSE (L108)	1					
22	90467–160A0	CLIP	2					
23	6D3–12577–00	HOSE 2	1					
24	90467–160A0	CLIP	1					
25	90467–200A0	CLIP	1					
26	6D3–1244G–00	HOSE, 4	1					
27	90467–160A0	CLIP	2					

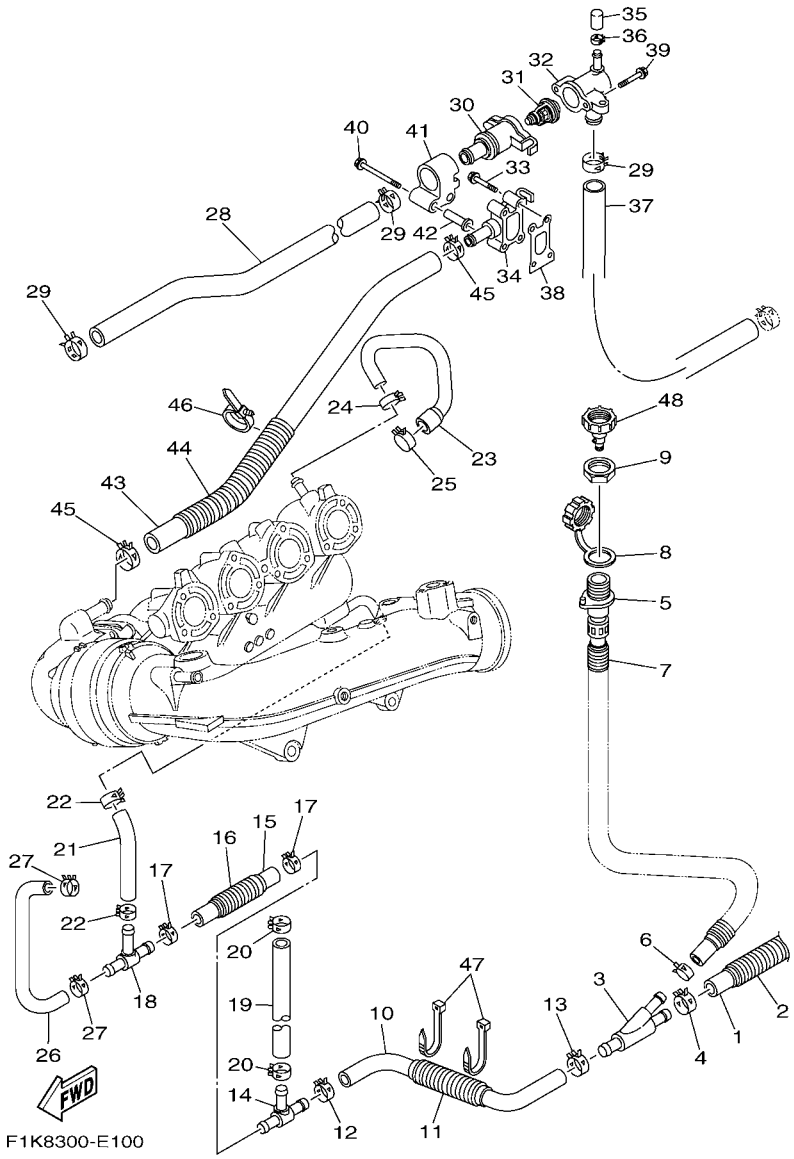

FIG. 10 EXHAUST 2

REF. NO.	PART NO.	DESCRIPTION	GENE					REMARKS
28	90445–26004	HOSE (L375)	1					
29	90467–240A0	CLIP	3					
30	60E–12417–10–94	HOUSING, THERMOSTAT	1					
31	6D3–12411–00	THERMOSTAT	1					
32	60E–12413–10–94	COVER, THERMOSTAT	1					
33	90105–06035	BOLT, FLANGE	2					
34	6D3–12446–00	JOINT	1					
35	6D3–12494–00	SEAL, PIPE 1	1					
36	90467–120A0	CLIP	1					
37	90445–25004	HOSE (L670)	1					
38	60E–12435–00	GASKET	1					
39	90105–06035	BOLT, FLANGE	2					
40	90105–06054	BOLT, FLANGE	2					
41	6B6–12499–00	JOINT	1					
42	90387–06083	COLLAR	2					
43	90445–21004	HOSE (L530)	1					
44	90447–22005	HOSE, WITH SPRING (L200)	1					
45	90467–200A0	CLIP	2					
46	90464–31001	CLAMP	1					
47	90464–35132	CLAMP	2					
48	67X–E2590–10	CONDUCTION ASSY	1					

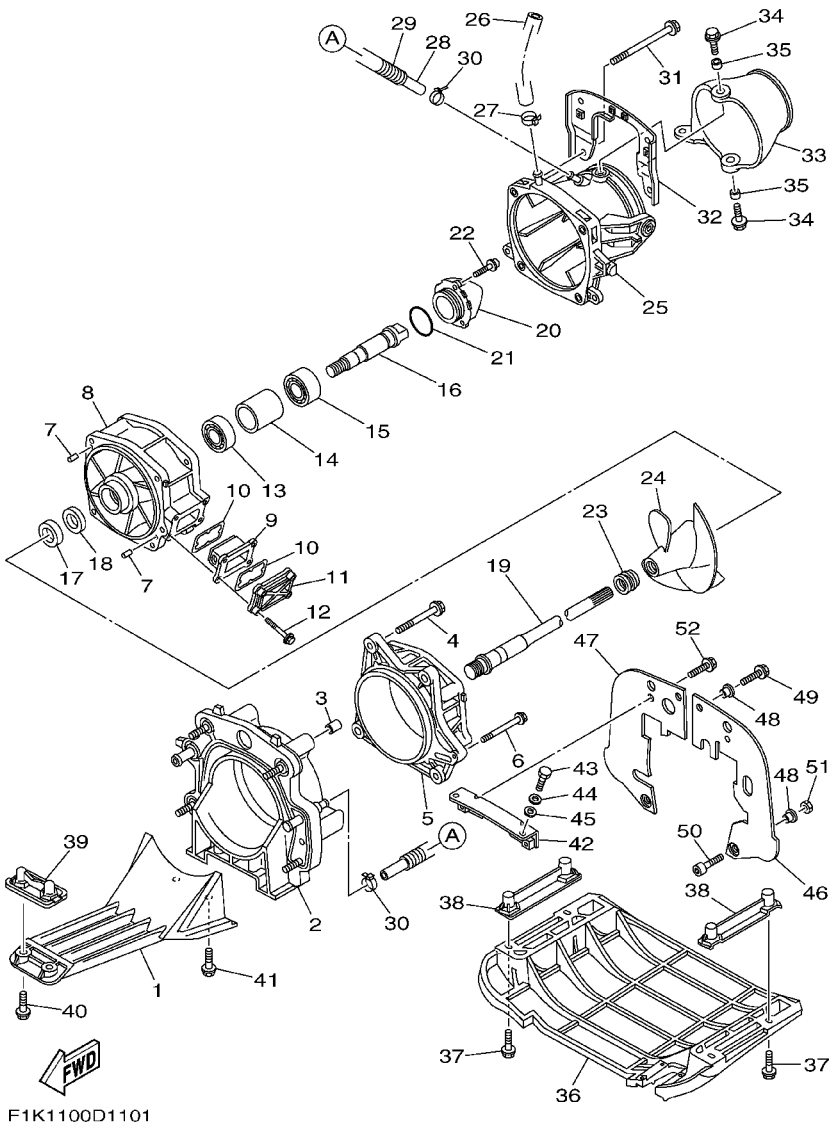

FIG. 11 JET UNIT 1

REF. NO.	PART NO.	DESCRIPTION	GENE					REMARKS
1	6D3–R1333–00–94	SCREEN, INTAKE	1					
2	6D3–G5831–00	PLATE, TRANSOM	1					
3	99590–14016	PIN, DOWEL	2					
4	90119–10836	BOLT, WITH WASHER	4					
5	66V–51312–01–94	HOUSING, IMPELLER	1					
6	90119–06835	BOLT, WITH WASHER	1					
7	93606–12019	PIN, DOWEL	2					
8	6B6–51315–01–94	DUCT, IMPELLER	1					
9	66V–46882–00	FILTER	1					
10	66V–42414–00	O-RING	2					
11	66V–45214–00–94	COVER, WATER INLET 1	1					
12	90119–06800	BOLT, WITH WASHER	4					
13	93306–27211	BEARING	1					
14	65V–45538–00	SPACER 1	1					
15	93306–205U0	BEARING	1					
16	6D3–45514–00	SHAFT, DRIVE 4	1					
17	93101–21001	OIL SEAL	1					
18	93101–21002	OIL SEAL	1					
19	6D3–45511–00	SHAFT, DRIVE	1					
20	6B6–51326–10	CAP	1					
21	93210–464A3	O-RING	1					
22	90110–06822	BOLT, HEXAGON SOCKET HEAD	3					
23	6D3–R1319–00	CAP, IMPELLER	1					
24	6D3–R1321–02	IMPELLER	1					
25	6D3–R1318–00	NOZZLE	1					
26	90445–16006	HOSE (L260)	1					
27	90601–118UF	BAND, HOSE 18	1					

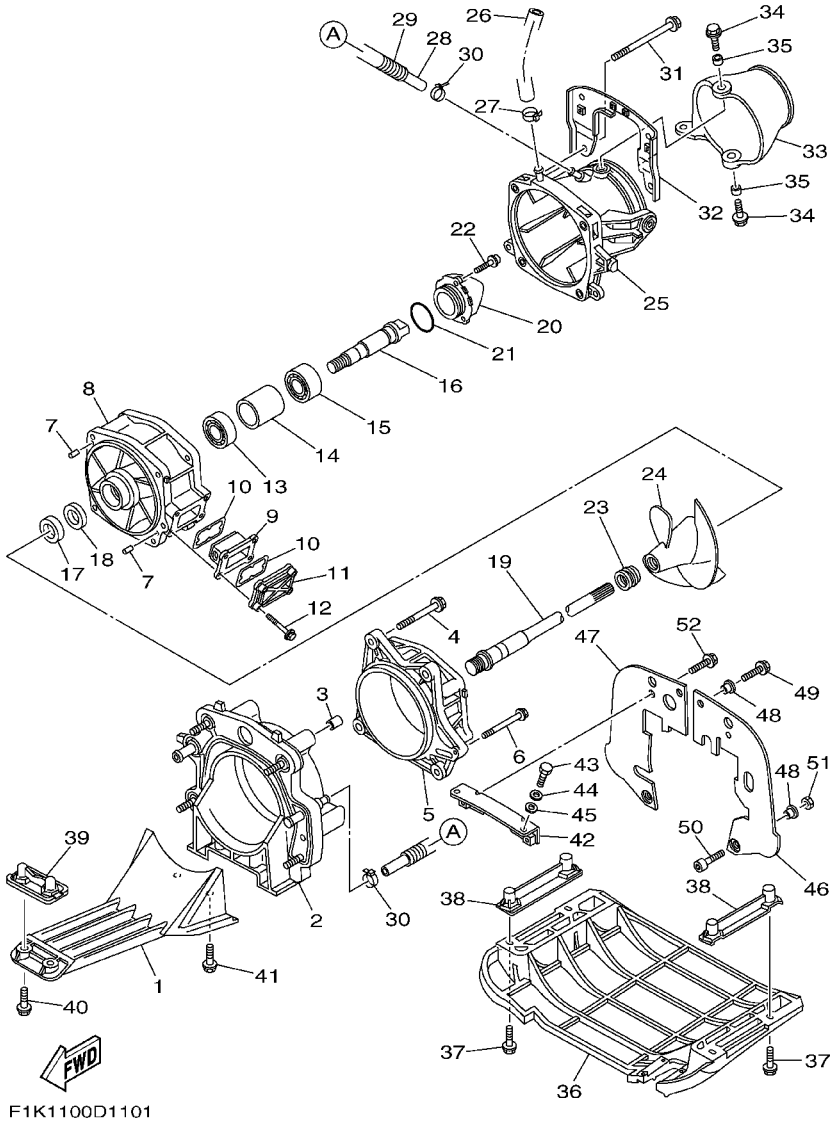

FIG. 11 JET UNIT 1

REF. NO.	PART NO.	DESCRIPTION	GENE					REMARKS
28	90445–14008	HOSE (L355)	1					
29	90446–20MF5	HOSE (L320)	1					
30	90465–11829	CLAMP	2					
31	90119–10837	BOLT, WITH WASHER	4					
32	6D3–R1341–00	BRACKET 1	1					
33	6D3–R1313–00	NOZZLE, DEFLECTOR	1					
34	90119–08840	BOLT, WITH WASHER	2					
35	90387–08M06	COLLAR	2					
36	F1K–U273B–03	PLATE 2	1					
37	90119–08823	BOLT, WITH WASHER	4					
38	F1G–U8572–00	BRACKET 2	2					
39	F1K–U8577–00	BRACKET, 3	1					
40	90119–069UK	BOLT, WITH WASHER	2					
41	90119–10805	BOLT, WITH WASHER	2					
42	F1K–U7557–00	BRACKET	1					
43	90109–08041	BOLT	2					
44	92990–12200	WASHER, PLAIN	2					
45	90430–12002	GASKET	2					
46	F1K–U757E–00	PLATE, RUBBER 1	1					
47	F1K–U757F–00	PLATE, RUBBER 2	1					
48	90387–06080	COLLAR	6					
49	90119–06827	BOLT, WITH WASHER	4					
50	90101–069U0	BOLT	2					
51	9572R–06300	NUT, NYLON	2					
52	90119–089U7	BOLT, WITH WASHER	2					

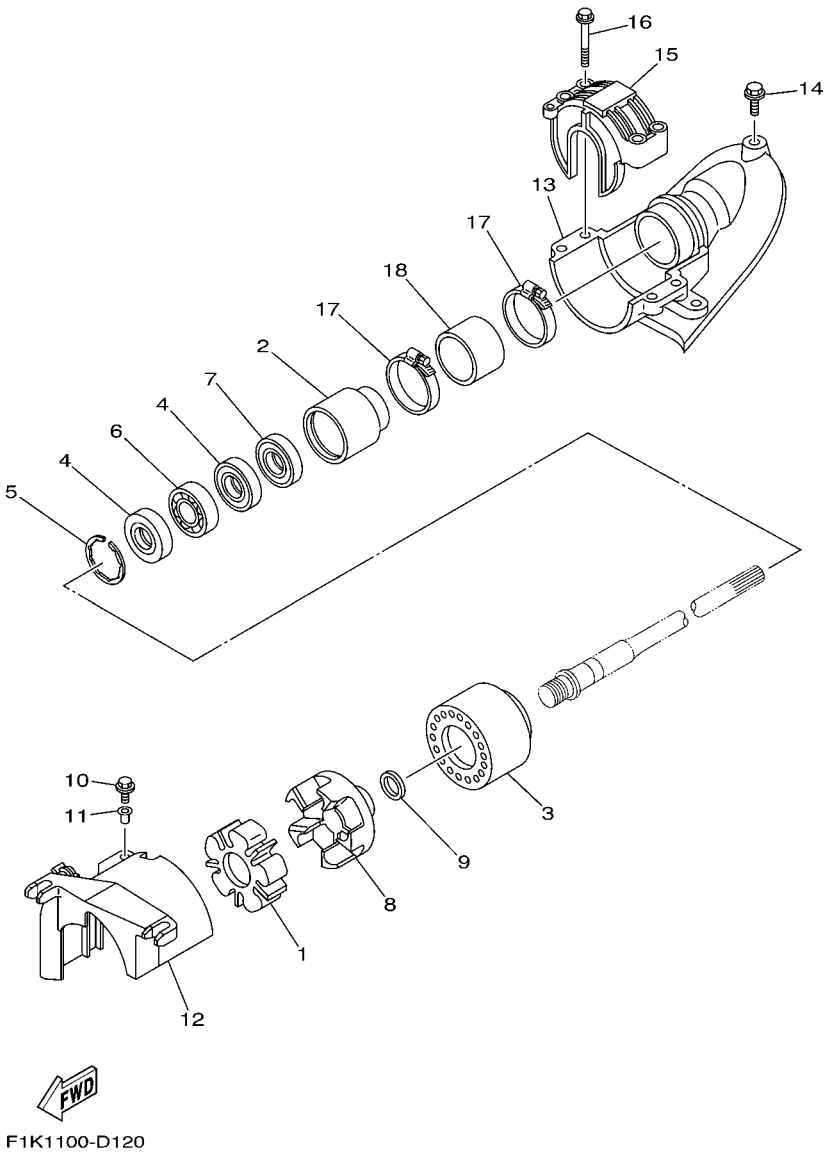

FIG. 12 JET UNIT 2

REF. NO.	PART NO.	DESCRIPTION	GENE					REMARKS
1	6D3–4581J–00	RUBBER SHAFT COUPLING	1					
2	6D3–45332–00–94	HOUSING, BEARING	1					
3	6D3–45235–00	DAMPER	1					
4	93101–25M55	OIL SEAL	2					
5	93430–47M04	CIRCLIP	1					
6	93306–205A3	BEARING	1					
7	93101–25M56	OIL SEAL	1					
8	6D3–45593–00–94	FLANGE, COUPLING 1	1					
9	90201–248M5	WASHER, PLATE	1					
10	90119–069UD	BOLT, WITH WASHER	1					
11	90387–06M60	COLLAR	1					
12	60E–R1381–01	COVER	1					
13	F1K–U883E–00	JOINT, PIPE	1					
14	90109–06832	BOLT	3					
15	F1K–U2155–00	CAP	1					
16	90119–089UU	BOLT, WITH WASHER	4					
17	90601–162U5	BAND, HOSE 62	2					
18	F1K–U883B–00	PIPE, 1	1					

FIG. 13 JET UNIT 3

FOR DELUXE

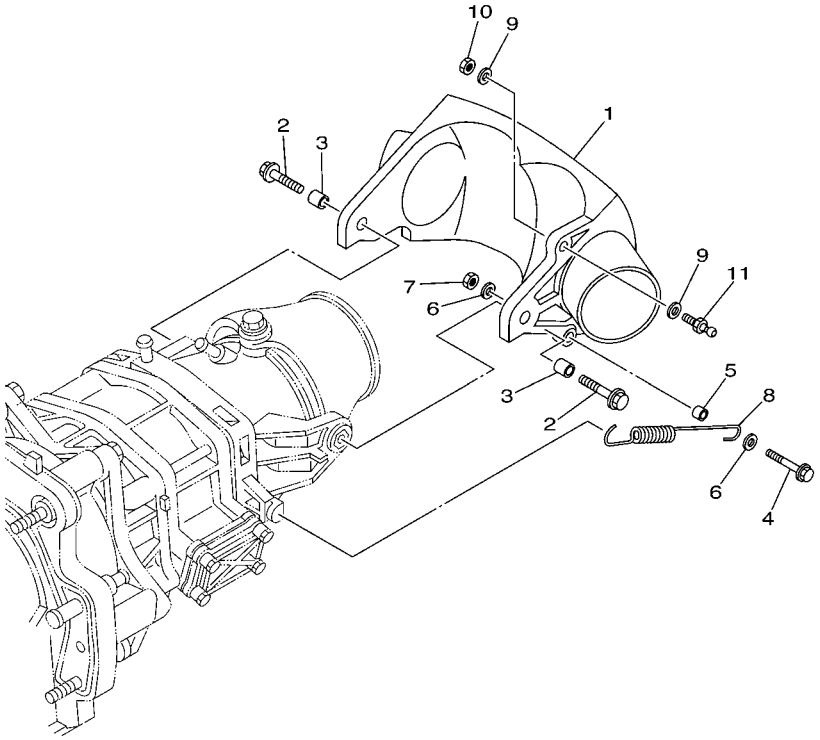

F1K1100-D130

REF. NO.	PART NO.	DESCRIPTION	GENE					REMARKS
1	6D3–R1314–00	GATE, REVERSE	1					
2	90119–08840	BOLT, WITH WASHER	2					
3	90387–08M30	COLLAR	2					
4	90119–069UX	BOLT, WITH WASHER	1					
5	90387–06M30	COLLAR	1					
6	90201–06801	WASHER, PLATE	2					
7	9538R–06600	NUT	1					
8	6D3–52358–00	SPRING, RETAINER	1					
9	90201–06801	WASHER, PLATE	2					
10	9538R–06600	NUT	1					
11	EU0–U1461–02	STUD, JOINT BALL	1					

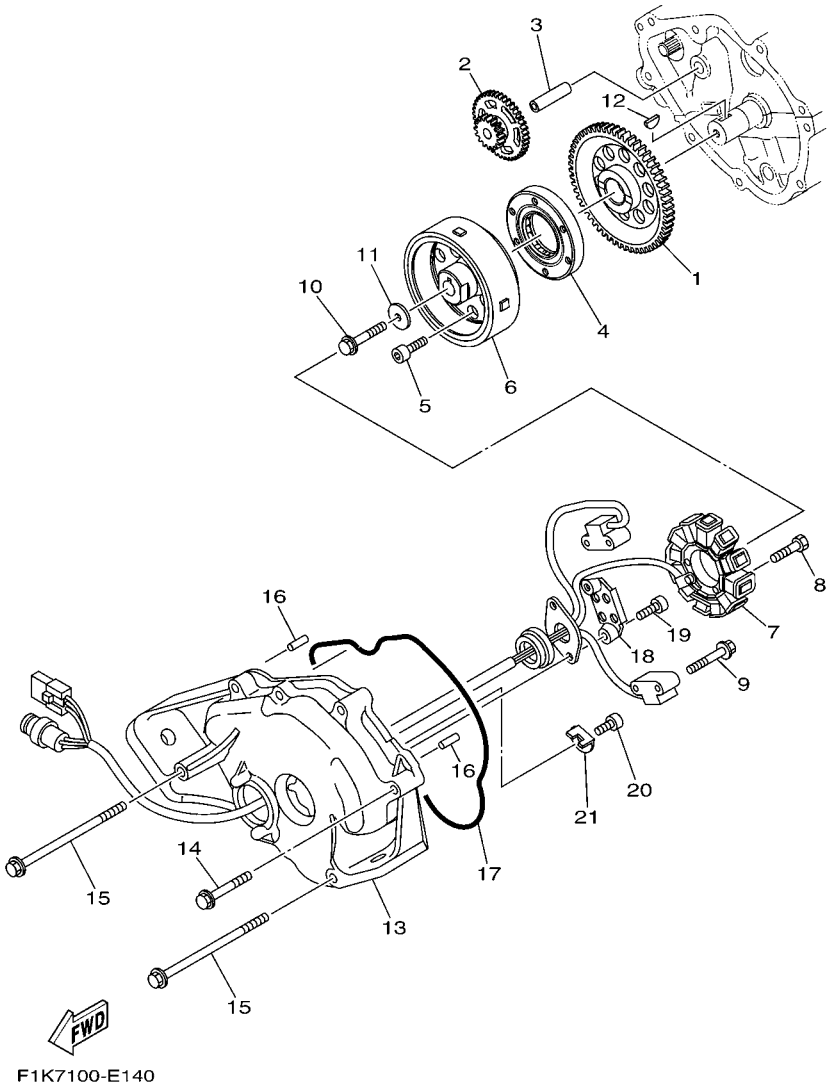

FIG. 14 GENERATOR

REF. NO.	PART NO.	DESCRIPTION	GENE					REMARKS
1	6D3–15515–00	GEAR 3	1					
2	60E–15517–00	GEAR, IDLER 2	1					
3	60E–15521–00	SHAFT 1	1					
4	4WM–15590–00	STARTER ONE-WAY ASSY	1					
5	90110–08212	BOLT, HEXAGON SOCKET HEAD	6					
6	6D3–81450–00	ROTOR ASSY	1					
7	6D3–81410–00	STATOR ASSY	1					
8	91317–06035	BOLT	3					
9	97513–05514	BOLT, WITH WASHER	2					
10	90105–105A6	BOLT, FLANGE	1					
11	90201–103U7	WASHER, PLATE	1					
12	90280–03047	KEY, WOODRUFF	1					
13	6D3–81337–00–94	COVER, FLYWHEEL	1					
14	90119–10016	BOLT, WITH WASHER	6					
15	90119–10M19	BOLT, WITH WASHER	2					
16	93608–16M16	PIN, DOWEL	2					
17	93212–04001	O-RING	1					
18	60E–81328–00	CLAMP	1					
19	91317–06014	BOLT	2					
20	91317–05010	BOLT	1					
21	6D3–81845–00	PLATE	1					

FIG. 15 STARTING MOTOR

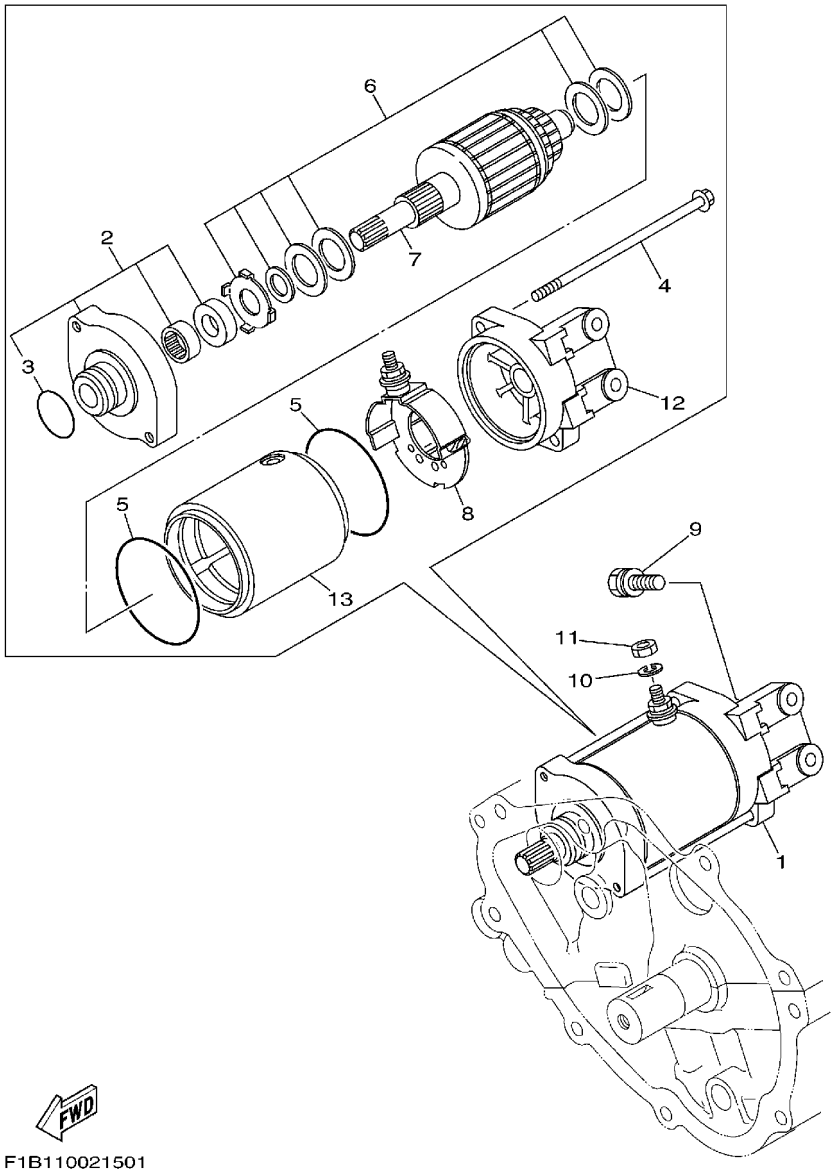

REF. NO.	PART NO.	DESCRIPTION	GENE					REMARKS
1	6D3–81800–00	STARTING MOTOR ASSY	1					
2	6M6–81830–00	.FRONT BRACKET ASSY	1					
3	1FK–81847–00	..O-RING	1					
4	6M6–81826–00	.BOLT	2					
5	11H–81844–00	.GASKET	2					
6	3AJ–81809–00	.WASHER KIT	1					
7	6M6–81850–00	.ARMATURE ASSY	1					
8	6M6–81840–10	.BRUSH HOLDER ASSY	1					
9	97513–08530	BOLT, WITH WASHER	2					
10	92990–06100	WASHER, SPRING	1					
11	95380–06700	NUT	1					
12	6D3-81820-00	.REAR BRACKET ASSY	1					
13	60E-81810-00	.STATOR ASSY	1					

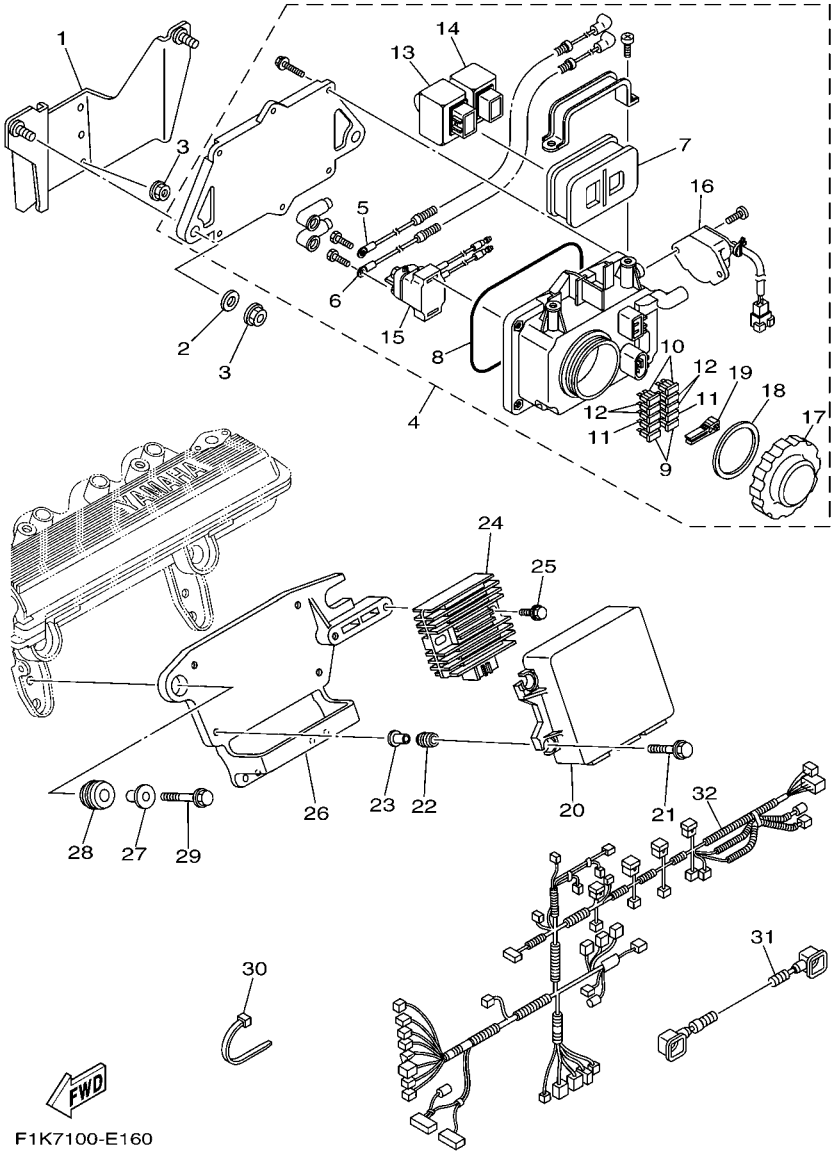

FIG. 16 ELECTRICAL 1

REF. NO.	PART NO.	DESCRIPTION	GENE					REMARKS
1	F1K–U815D–00	BRACKET, ELECTRIC BOX	1					
2	90201–099U3	WASHER, PLATE	2					
3	9572R–08300	NUT, FLANGE	6					
4	6D3–82170–00	FUSE BOX ASSY	1					
5	6D3–82115–00	.WIRE, PLUS LEAD	1					
6	6D3–82117–00	.WIRE, LEAD	1					
7	6D3–82157–00	.DAMPER	1					
8	6D3–81921–00	.GASKET, TERMINAL	1					
9	67F–82151–00	.FUSE (20A)	2					
10	67F–82151–10	.FUSE (30A)	2					
11	67F–82151–30	.FUSE (3A)	2					
12	67F–82151–40	.FUSE (10A)	4					
13	60E–81950–00	.RELAY ASSY	1					
14	68V–81950–00	.RELAY ASSY	1					
15	6B6–81940–00	.STARTER RELAY ASSY	1					
16	60E–8259E–00	.SWITCH ASSY	1					
17	66V–8132W–00	.CAP	1					
18	66V–81844–00	.GASKET	1					
19	67F–2812A–00	.PULLER, FUSE	1					
20	6D3–8591A–B0	ENGINE CONTROL UNIT ASSY	1					DELUXE
	6D3–8591A–10	ENGINE CONTROL UNIT ASSY	1					SPORT
21	90119–06M35	BOLT, WITH WASHER	4					
22	6A0–82317–00	DAMPER, IGNITION COIL	4					
23	90387–06119	COLLAR	4					
24	6S8–81960–00	RECTIFIER & REGULATOR ASSY	1					
25	90119–06M35	BOLT, WITH WASHER	2					
26	6D3–85991–01	BRACKET, UNIT	1					

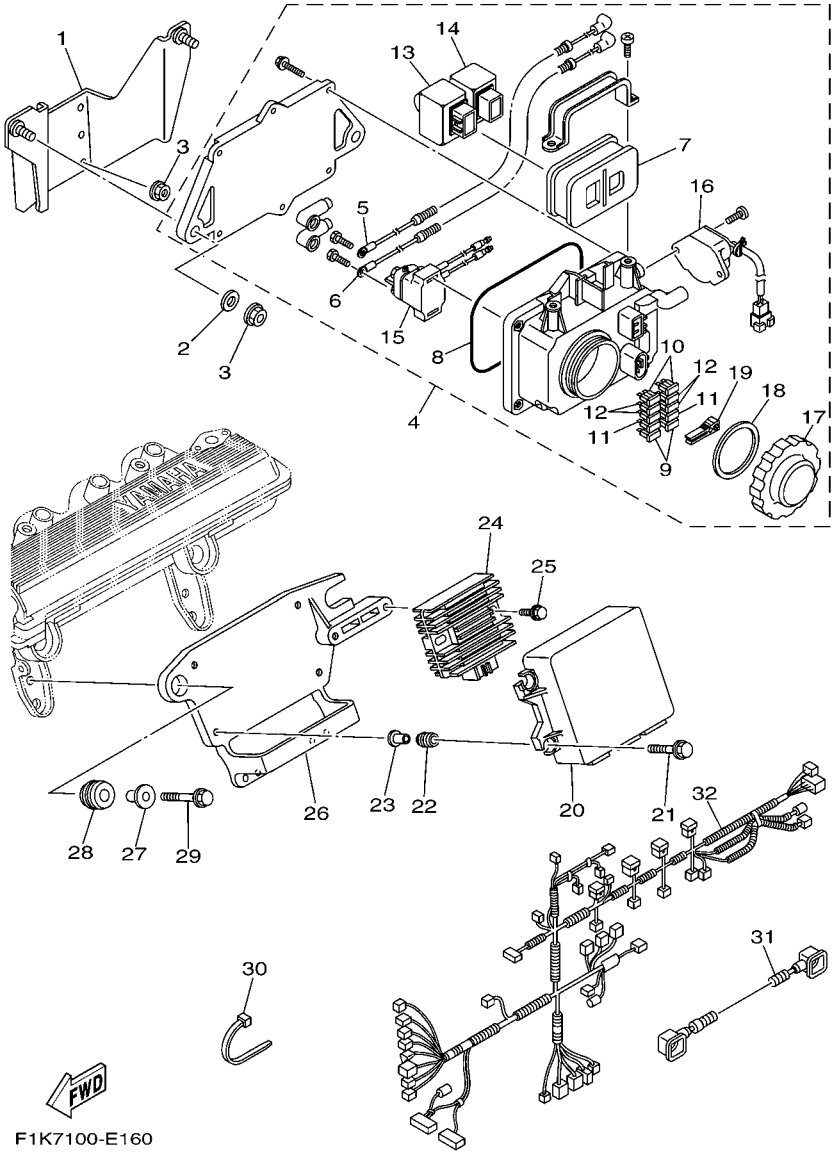

FIG. 16 ELECTRICAL 1

REF. NO.	PART NO.	DESCRIPTION	GENE					REMARKS
27	90387–08M37	COLLAR	2					
28	90480–22M15	GROMMET	2					
29	90119–08M22	BOLT, WITH WASHER	2					
30	90464–35132	CLAMP	2					
31	6D3–82116–00	WIRE, MINUS LEAD	1					
32	6D3–8259L–A1	WIRE HARNESS ASSY 1	1					DELUXE
	6D3–8259L–01	WIRE HARNESS ASSY 1	1					SPORT

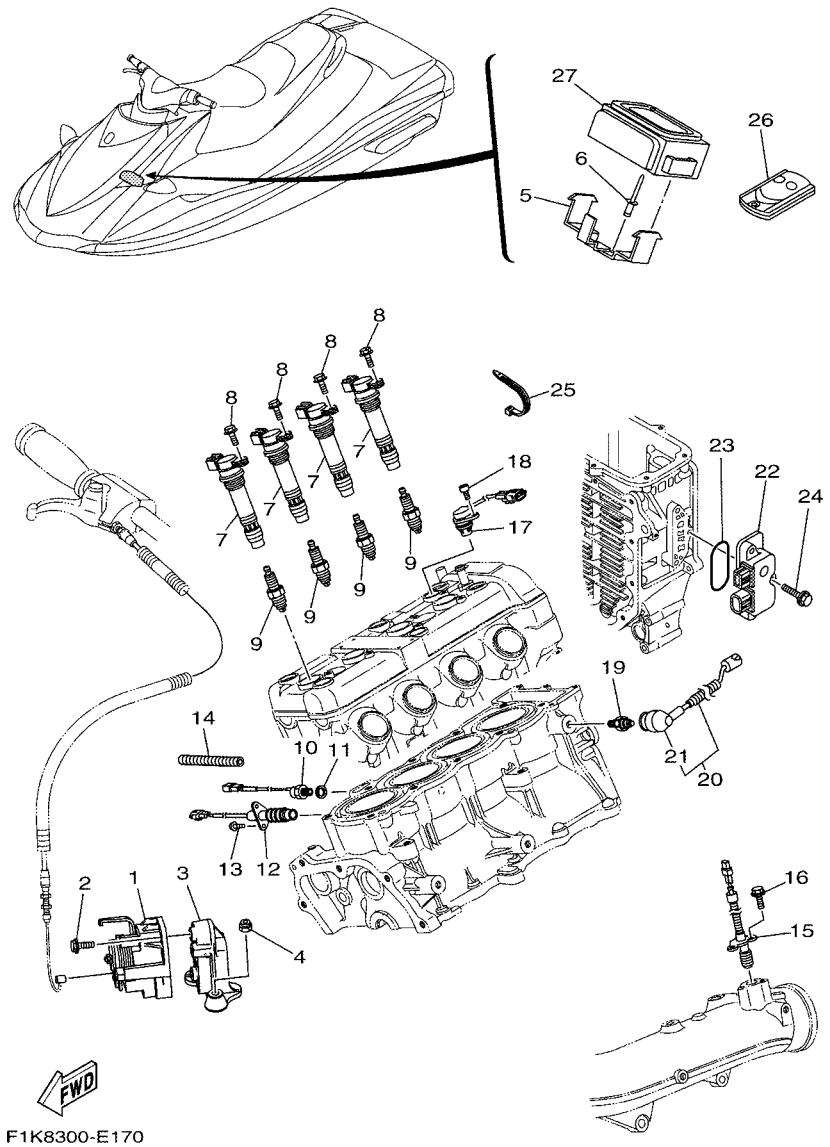

FIG. 17 ELECTRICAL 2

REF. NO.	PART NO.	DESCRIPTION	GENE					REMARKS
1	6D3–14305–10	ACCEL. POSITON SENSOR ASSY	1					
2	90119–08MA3	BOLT, WITH WASHER	3					
3	6D3–14493–00–8P	STAY 1	1					
4	95780–08300	NUT, FLANGE	2					
5	F1S–U826C–00	BRACKET	1					
6	90267–489U9	RIVET, BLIND	2					
7	6B6–82310–00	IGNITION COIL ASSY	4					
8	95880–06016	BOLT, FLANGE	4					
9	94702–00409	PLUG, SPARK (NGK CR9EB)	4					
10	61A–85790–00	THERMOSENSOR ASSY	1					
11	92990–10600	WASHER, PLATE	1					
12	60E–82560–A1	THERMO SWITCH ASSY	1					
13	97595–06416	BOLT, WITH WASHER	2					
14	90446–14M23	HOSE	1					
15	6D3–82560–01	THERMO SWITCH ASSY	1					
16	97595–06416	BOLT, WITH WASHER	2					
17	6D3–85896–00	SENSOR, CAM POSITION	1					
18	91380–06016	BOLT	1					
19	68V–82504–00	OIL PRESSURE SWITCH ASSY	1					
20	60E–81315–00	LEAD WIRE ASSY	1					
21	60E–82532–00	.CAP	1					
22	6D3–8273J–00	EARTH PLATE COMP.	1					
23	93210–60ME8	O-RING	1					
24	90119–06048	BOLT, WITH WASHER	3					
25	90465–13M18	CLAMP	2					
26	6B6–86261–10	TRANSMITTER COMP	2					
27	6B6–86265–10	RECIVER COMP	1					

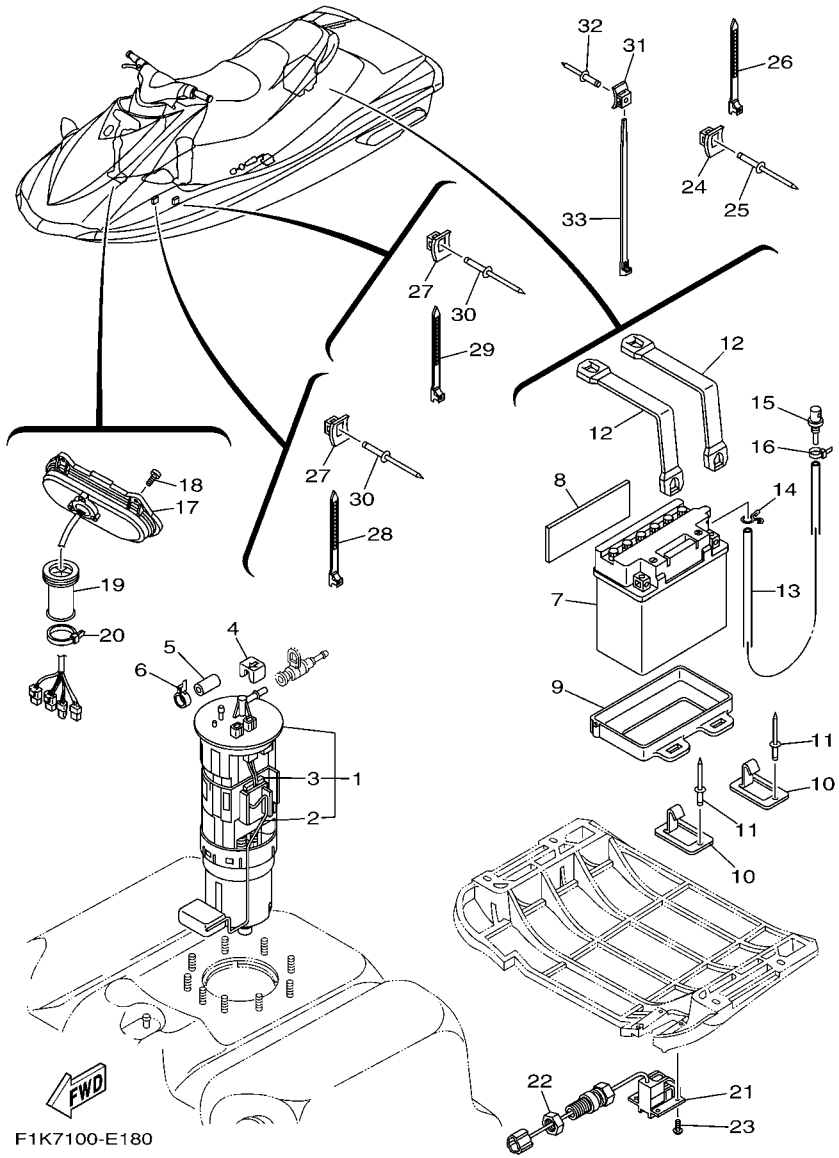

FIG. 18 ELECTRICAL 3

REF. NO.	PART NO.	DESCRIPTION	GENE					REMARKS
1	60E–13907–01	FUEL PUMP COMP.	1					
2	60E–682E0–00	.FUEL SENDER ASSY	1					
3	60E–82556–00	.DAMPER, STOPPER	1					
4	60E–24474–00	COVER	1					
5	6D3–24481–00	PLUG	1					
6	6D3–24387–00	CLIP	1					
7	EU0–82110–09	BATTERY ASSY (YB16CL-B)	1					YUASA
8	F1K–U8221–00	PAD, BATTERY	1					
9	F1K–U8211–01	CASE, BATTERY	1					
10	F1K–U5772–02	HOOK A	4					
11	90267–489U1	RIVET,BLIND	4					
12	F1K–U821D–00	BAND, BATTERY 1	2					
13	F0D–U785G–10	HOSE, AIR VENT	1					
14	90467–089U1	CLIP	1					
15	GJ3–6215F–00	NIPPLE	1					
16	90465–11829	CLAMP	1					
17	F1K–6820A–01	METER ASSY	1					DELUXE
	F1K–6820A–11	METER ASSY	1					SPORT
18	90111–05008	BOLT,HEX. SOCKET BUTTON	4					
19	GU2–6822E–01	GROMMET	1					
20	90464–32801	CLAMP	1					
21	F1S–U8K31–02	SENSOR SPEED	1					
22	EU0–62241–30	NUT, DRAIN 1	1					
23	90150–05807	SCREW, ROUND HEAD	4					
24	90600–917U4	CLAMP COMP.	7					DELUXE
	90600–917U4	CLAMP COMP.	6					SPORT
25	90267–489U6	RIVET, BLIND	7					DELUXE

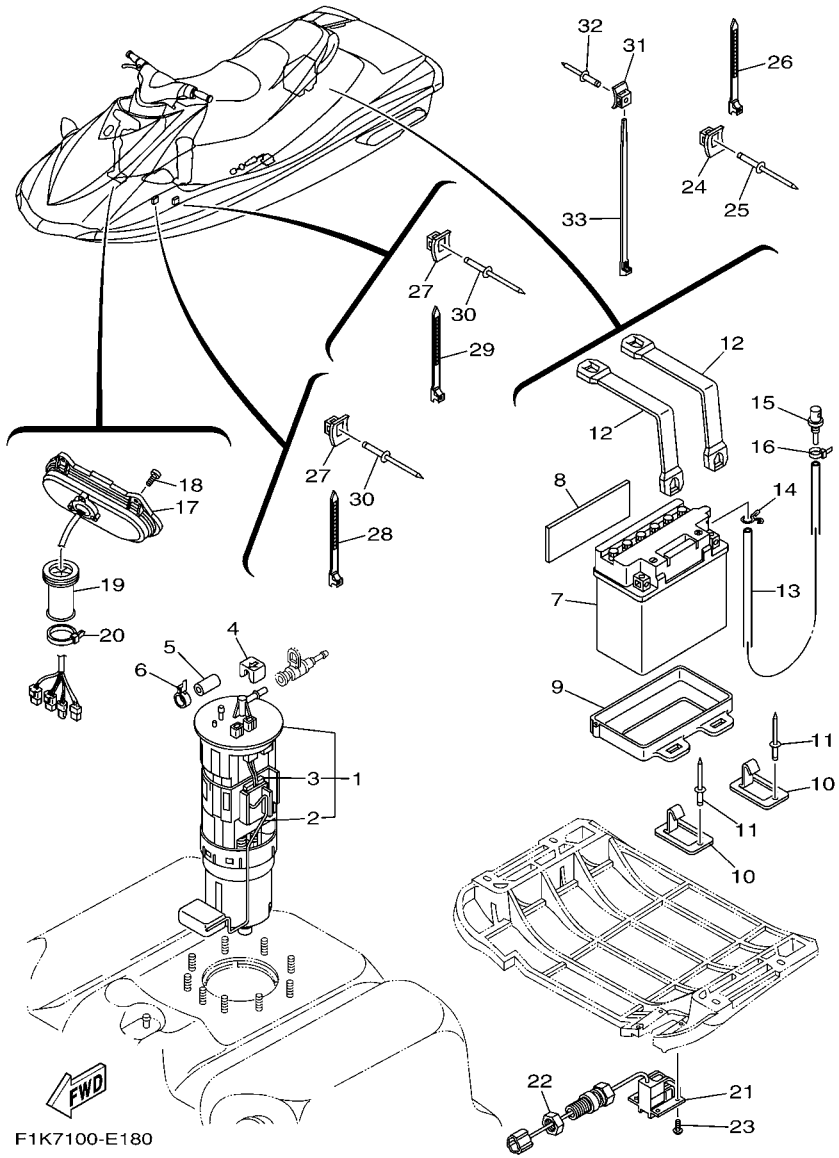

FIG. 18 ELECTRICAL 3

REF. NO.	PART NO.	DESCRIPTION	GENE					REMARKS
25	90267–489U6	RIVET, BLIND	6					SPORT
26	90464–32801	CLAMP	7					DELUXE
	90464–32801	CLAMP	6					SPORT
27	90600–917U4	CLAMP COMP.	2					
28	90464–32801	CLAMP	1					
29	90601–200U2	BAND	1					
30	90267–489U6	RIVET, BLIND	2					
31	90600–917U4	CLAMP COMP.	1					
32	90267–489U6	RIVET, BLIND	1					
33	90464–32801	CLAMP	1					

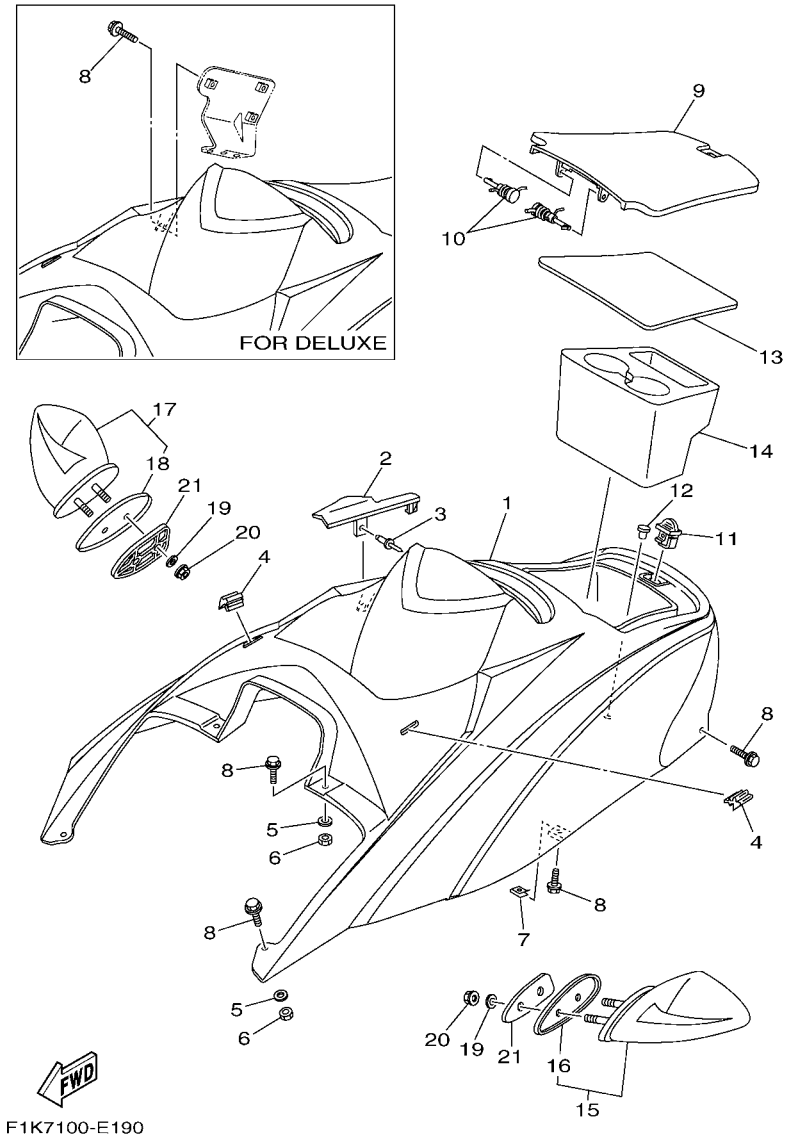

FIG. 19 ENGINE HATCH 1

REF. NO.	PART NO.	DESCRIPTION	GENE					REMARKS
1	F1K–U516N–02–P0	COVER, ENGINE HATCH	1					UR DELUXE RED
	F1K–U516N–10–P0	COVER, ENGINE HATCH	1					UR DELUXE BLUE
	F1K–U516N–20–P0	COVER, ENGINE HATCH	1					UR SPORT BLUE
2	F1K–U2723–00	SEAL	1					SPORT
3	90269–09805	RIVET	1					SPORT
4	F1K–U266C–00	PACKING 4	2					
5	9299R–06200	WASHER	4					
6	9572R–06300	NUT, NYLON	4					
7	90183–06902	NUT, SPRING	2					
8	90119–06858	BOLT, WITH WASHER	9					DELUXE
	90119–06858	BOLT, WITH WASHER	8					SPORT
9	F1K–U517H–01	LID HATCH	1					
10	F0X–6517R–01	PIN, HINGE	2					
11	GU2–62875–01	LOCK	1					
12	90605–502U1	PLUG, BLIND	1					
13	F1K–U519D–00	PACKING CASE	1					
14	F1K–U5633–02	HOLDER, DRINK	1					
15	F1S–U596B–10	MIRROR LH	1					DELUXE
16	F0V–U471E–00	.SPACER 1	1					DELUXE
17	F1S–U596C–10	MIRROR RH	1					DELUXE
18	F0V–U471F–00	.SPACER 2	1					DELUXE
19	9299R–08200	WASHER	4					DELUXE
20	9572R–08300	NUT, FLANGE	4					DELUXE
21	F1B–U5646–00	PLATE	2					DELUXE

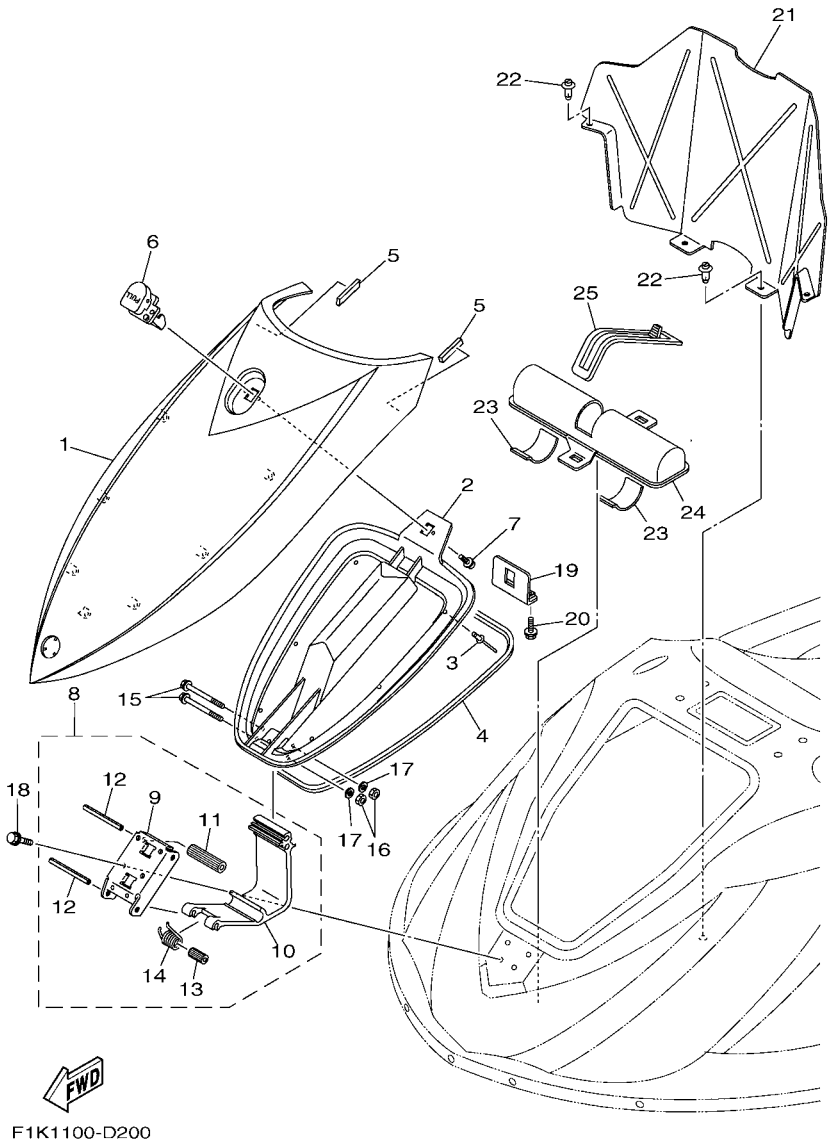

FIG. 20 ENGINE HATCH 2

REF. NO.	PART NO.	DESCRIPTION	GENE					REMARKS
1	F1K–U517B–00–P0	LID, ENGINE ROOM	1					UR DELUXE RED
	F1K–U517B–10–P0	LID, ENGINE ROOM	1					UR DELUXE BLUE
	F1K–U517B–20–P0	LID, ENGINE ROOM	1					UR SPORT BLUE
2	F1K–U2103–00	VENTILATOR COVER COMP., 2	1					
3	90267–48809	RIVET, BLIND	7					
4	F1K–U2663–00	PACKING 1	1					
5	F1K–U266B–00	PACKING 3	2					
6	F1K–6517C–00	LOCK, LID	1					
7	90159–059U2	SCREW, WITH WASHER	2					
8	F1K–U515A–00	HINGE ASSY.	1					
9	F1K–U518E–03	.PRATE, HINGE LID	1					
10	F1K–U517D–05	.HINGE, LID	1					
11	F1K–U135C–00	.ROLLER, DETENT	1					
12	F1K–U517R–00	.PIN, HINGE	2					
13	F1K–U471E–02	.SPACER 1	1					
14	F1K–U283B–02	.SPRING, TORSION	1					
15	90105–06826	BOLT, FLANGE	2					
16	9572R–06300	NUT, NYLON	2					
17	9299R–06200	WASHER	2					
18	90119–069UH	BOLT, WITH WASHER	4					
19	F1K–U517F–01	HOOK,LID LOCK	1					
20	90119–069UH	BOLT, WITH WASHER	2					
21	F1K–U475F–01	PLATE, LOKER BOW	1					
22	90269–08801	RIVET	4					
23	F1K–U759C–00	MAT 2	2					
24	F1K–U5983–01	BOX, FIRE EXTINGUISHER	1					
25	F1K–U828K–00	BAND, 1	1					

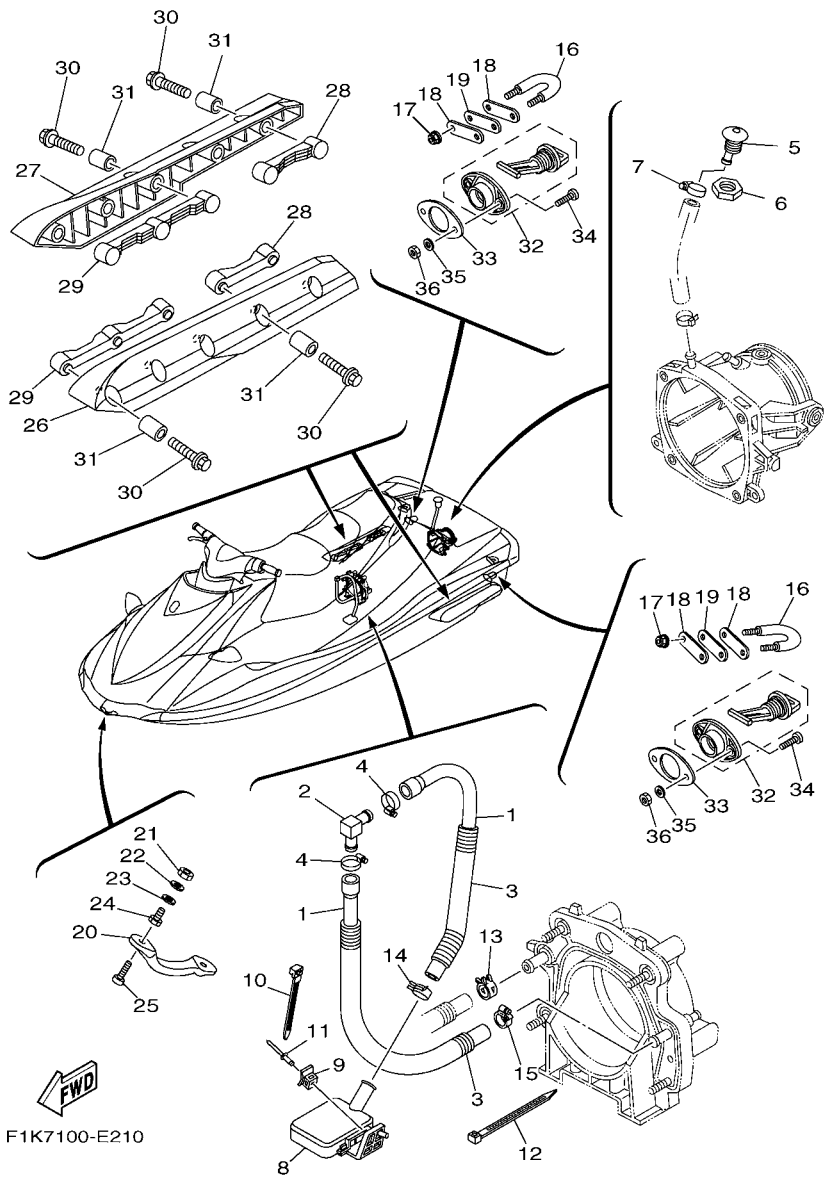

FIG. 21 HULL & DECK

REF. NO.	PART NO.	DESCRIPTION	GENE					REMARKS
1	90445–20805	HOSE (L710)	2					
2	61X–51162–00	JOINT, HOSE	1					
3	90446–27M55	TUBE (L400)	2					
4	90601–118UF	BAND, HOSE 18	2					
5	FN8–6269B–00	SPOUT	1					
6	EU0–61652–00	NUT	1					
7	90601–118UF	BAND, HOSE 18	1					
8	F1B–U761D–02	STRAINER, BILGE	1					
9	90600–917U4	CLAMP COMP.	1					
10	90464–32801	CLAMP	1					
11	90267–489U8	RIVET, BLIND	1					
12	90601–200U1	BAND	1					
13	90601–118UF	BAND, HOSE 18	1					
14	90467–200A0	CLIP	1					
15	90467–250A0	CLIP	1					
16	F1K–61628–00	STERN EYE	2					DELUXE
	GP7–61628–00	STERN EYE	2					SPORT
17	9572R–08300	NUT, FLANGE	4					
18	GP7–U4953–10	PLATE A	4					
19	F1B–U1653–01	PACKING	2					
20	F1K–61624–00	BOWEYE 1	1					DELUXE
	F0X–61624–00	BOWEYE 1	1					SPORT
21	99780–12600	NUT.HEX.(COARS)	2					
22	92990–12200	WASHER, PLAIN	2					
23	F0X–61637–00	WASHER	2					
24	F0X–61652–00	NUT (BOLT/NUT)	2					
25	90110–06040	BOLT, HEXAGON SOCKET HEAD	2					

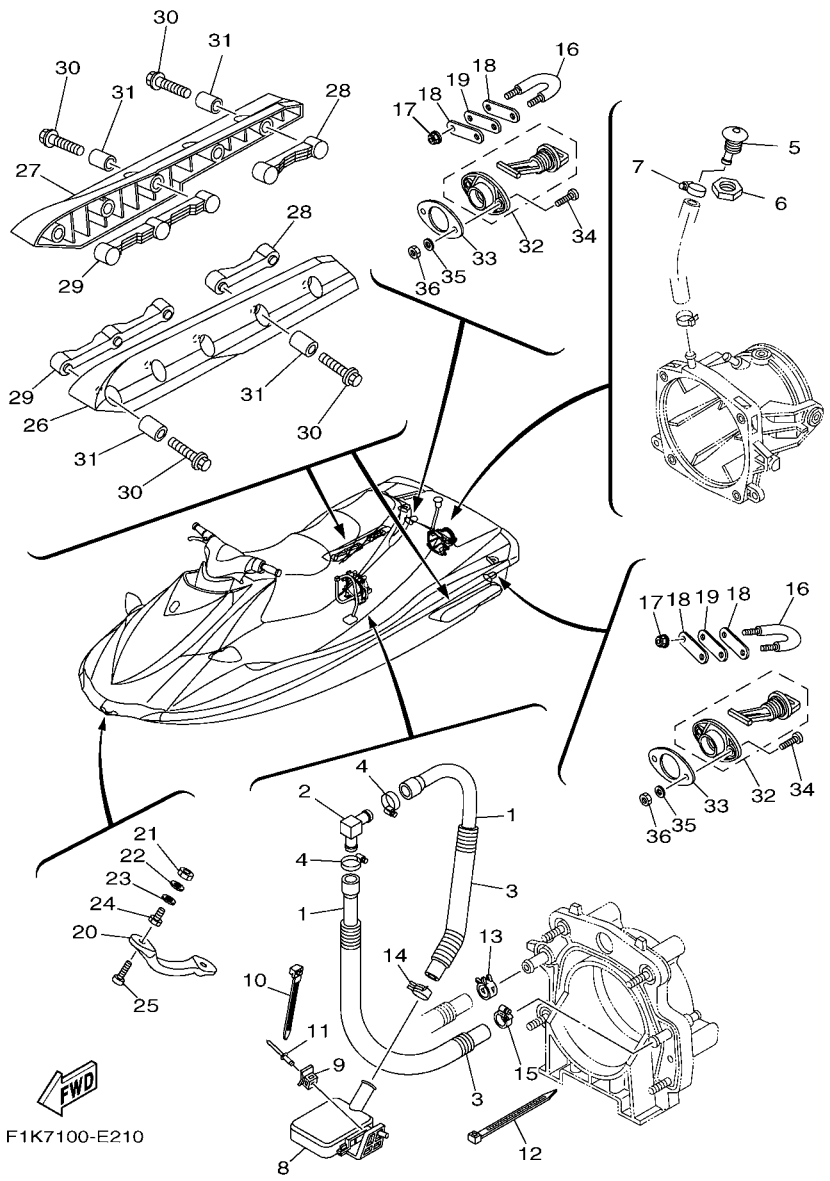

FIG. 21 HULL & DECK

REF. NO.	PART NO.	DESCRIPTION	GENE					REMARKS
26	F1S–U883N–01	STABILIZER LH	1					BL
27	F1S–U883P–01	STABILIZER RH	1					BL
28	F1F–U883T–02	BRACKET,STABILIZER	2					
29	F1B–U883T–02	BRACKET,STABILIZER	2					
30	90105–08860	BOLT, FLANGE	10					
31	F1K–U8169–00	SPACER	10					
32	F1S–U2280–00	DRAIN PLUG ASSY.	2					
33	F1S–U2285–00	PACKING, DRAIN	2					
34	9788R–05025	SCREW, PAN HEAD	4					
35	9299R–05200	WASHER	4					
36	9572R–05300	NUT, FLANGE	4					

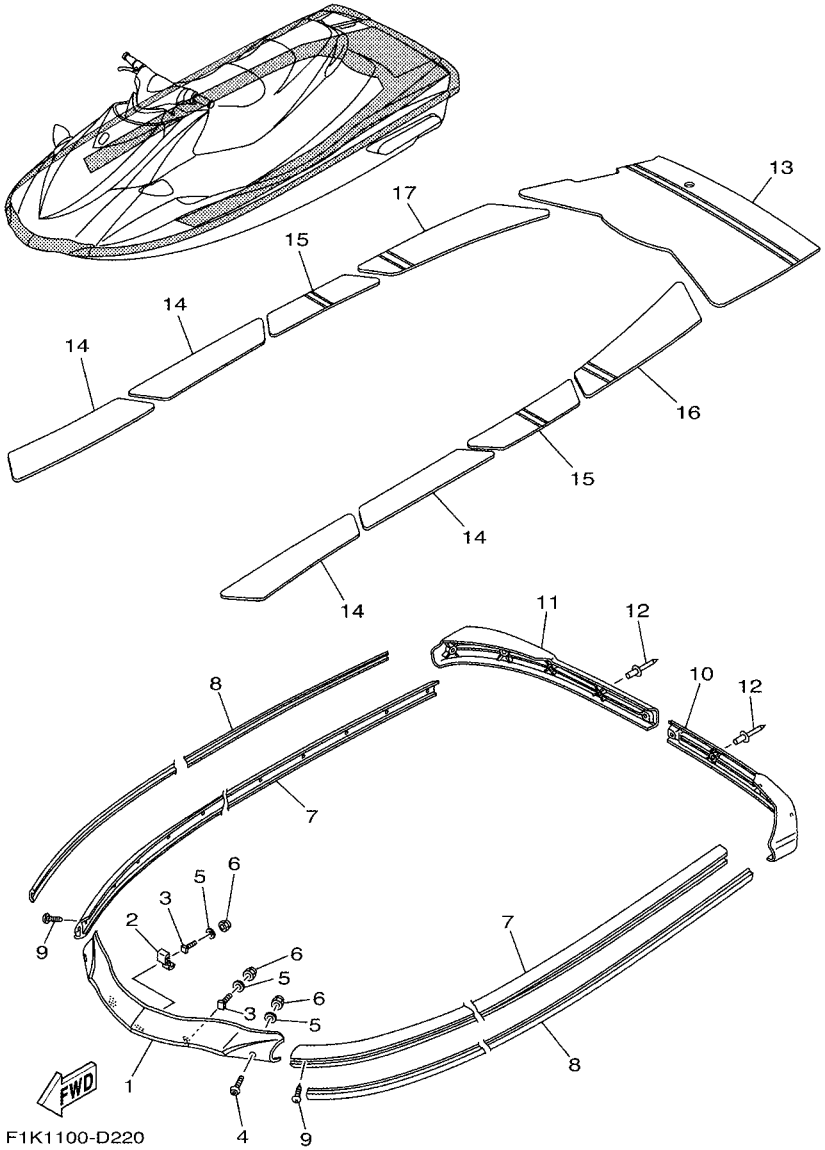

FIG. 22 GUNWALE & MAT

REF. NO.	PART NO.	DESCRIPTION	GENE					REMARKS
1	F1K–U2501–01	BOW GUNWALE COMP.	1					GRAY
2	F1K–U2521–02	PLATE	1					
3	F1K–U491K–00	BOLT, SPECIAL	3					
4	90111–06803	BOLT,HEX. SOCKET BUTTON	2					
5	9299R–06200	WASHER	5					
6	9572R–06300	NUT, NYLON	5					
7	F1K–U2512–03	GUNWALE, SIDE	2					GRAY
8	F1K–U2519–01	INNER,GUNWALE	2					DELUXE FOR GRAY
	F1K–U2519–10	INNER,GUNWALE	2					SPORT FOR BLUE
9	90169–059U1	SCREW,TAPPING	30					
10	F1K–U251D–01	GUNWALE, STERN 1	1					GRAY
11	F1K–U251E–01	GUNWALE, STERN 2	1					GRAY
12	90267–47801	RIVET, BLIND	9					
13	F1K–U3581–10	MAT, UPPER	1					GRAY
14	F1K–U351H–10	MAT, STEP 1	4					GRAY
15	F1K–U351J–10	MAT, STEP 2	2					GRAY
16	F1K–U351K–10	MAT, STEP 3	1					GRAY
17	F1K–U351M–10	MAT, STEP 4	1					GRAY

FIG. 23 VENTILATION

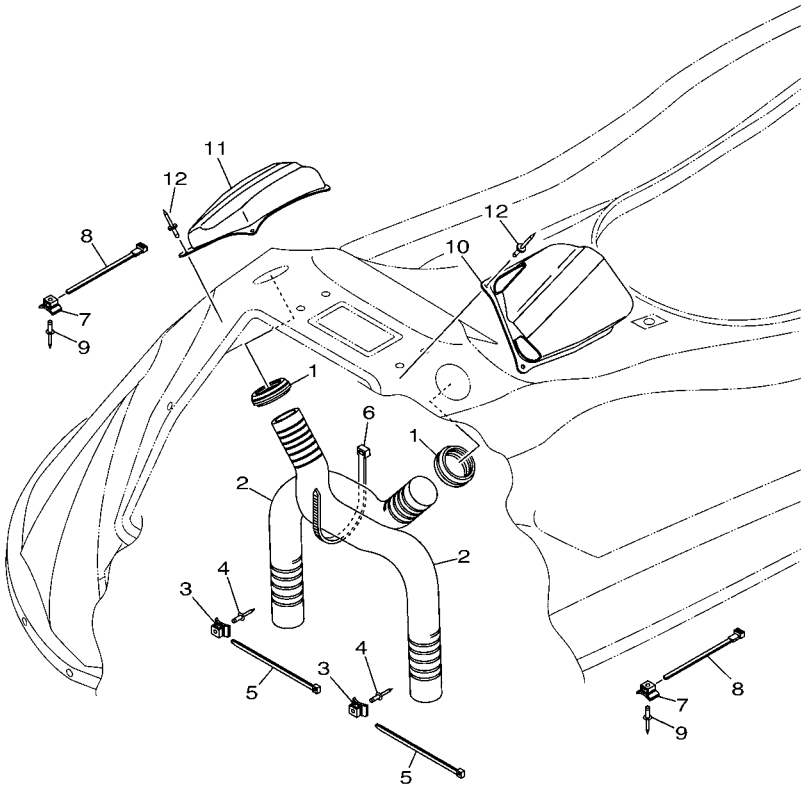

F1K1100-D230

REF. NO.	PART NO.	DESCRIPTION	GENE					REMARKS
1	F1K–U2127–00	BASE, AIR INTAKE	2					
2	F1K–U213G–00	HOSE, VENTILATOR 2	2					
3	90600–917U4	CLAMP COMP.	2					
4	90267–489U6	RIVET, BLIND	2					
5	90464–99804	CLAMP	2					
6	90601–200U7	BAND	1					
7	90600–917U4	CLAMP COMP.	2					
8	90464–32801	CLAMP	2					
9	90267–489U6	RIVET, BLIND	2					
10	F1K–U2187–00	BOX, INDUCTION 1	1					
11	F1K–U2188–00	BOX, INDUCTION 2	1					
12	90267–48806	RIVET, BLIND	8					

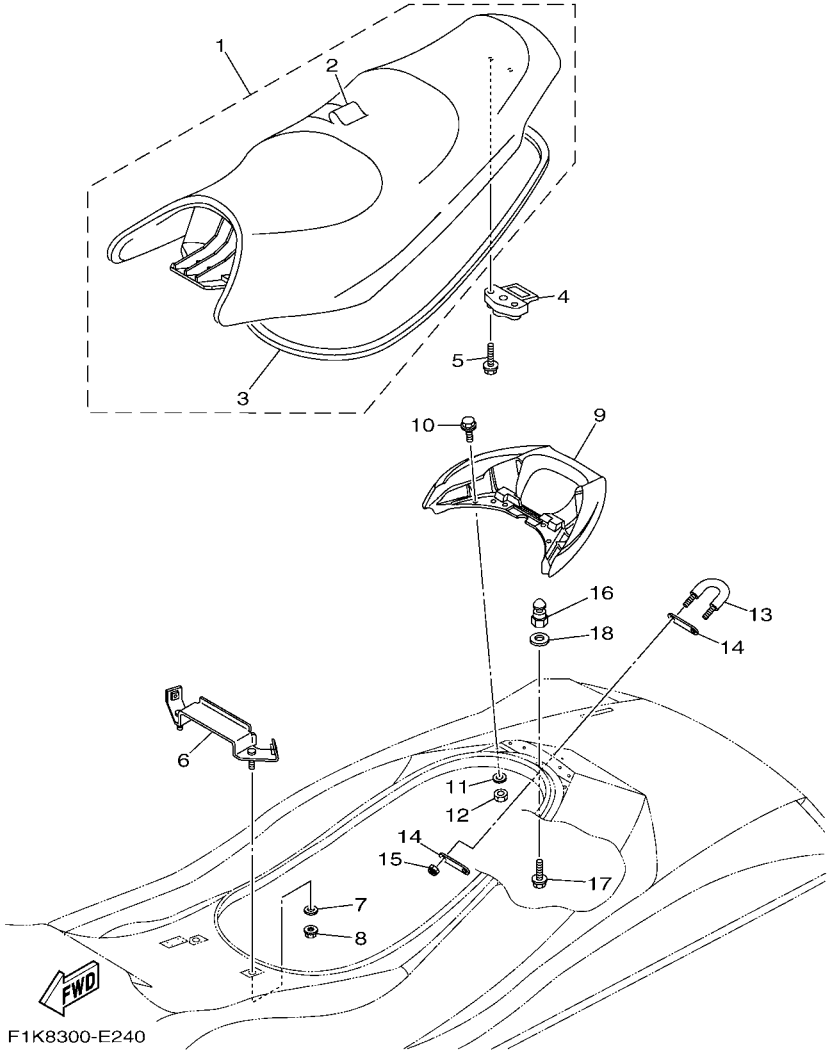

FIG. 24 SEAT & UNDER LOCKER

REF. NO.	PART NO.	DESCRIPTION	GENE					REMARKS
1	F1K–U371A–11	DOUBLE SEAT ASSY	1					DELUXE
	F1K–U371A–21	DOUBLE SEAT ASSY	1					SPORT
2	F1K–U371B–10	.COVER, SEAT 1	1					DELUXE
	F1K–U371B–20	.COVER, SEAT 1	1					SPORT
3	F1K–U2664–01	.PACKING	1					
4	GJ3–63850–03	SEAT LOCK ASSY	1					
5	90119–069UP	BOLT, WITH WASHER	2					
6	F1K–U378C–00	STAY, SEAT 1	1					
7	90201–099U3	WASHER, PLATE	2					
8	9572R–08300	NUT, FLANGE	2					
9	F1K–U271B–04	GRIP, HAND	1					
10	90119–06820	BOLT, WITH WASHER	4					
11	9299R–06200	WASHER	4					
12	9572R–06300	NUT, NYLON	4					
13	GP7–61628–00	STERN EYE	1					
14	GP7–U4953–10	PLATE A	2					
15	9572R–08300	NUT, FLANGE	2					
16	F1K–U3774–00	PIN	1					
17	90119–10804	BOLT, WITH WASHER	1					
18	9299R–10200	WASHER	1					

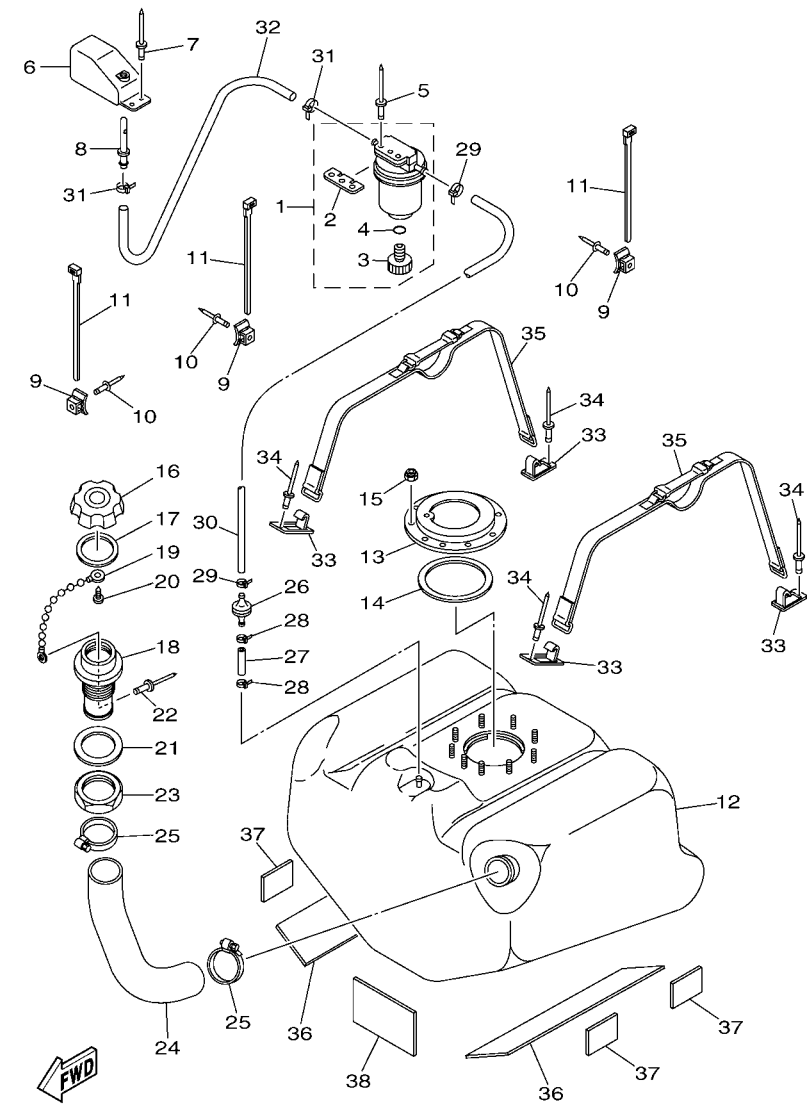

F1K7100-E250

FIG. 25 FUEL TANK

REF. NO.	PART NO.	DESCRIPTION	GENE					REMARKS
1	EW2–62140–00	FILTER, VENT ASSY	1					
2	EW2–62142–00	.PLATE, FILTER	1					
3	70R–24543–00	.PLUG, DRAIN	1					
4	70R–24489–00	.O-RING	1					
5	90267–489U2	RIVET, BLIND	2					
6	GP7–62159–02	SOCKET, VENTILATION	1					
7	90267–489U6	RIVET, BLIND	2					
8	F1G–62149–00	PIPE, VENTILATION	1					
9	90600–917U4	CLAMP COMP.	3					
10	90267–489U6	RIVET, BLIND	3					
11	90464–32801	CLAMP	3					
12	F1K–U7711–02	TANK, FUEL	1					
13	F1B–U7773–00	RING	1					
14	F1B–67747–00	PACKING, SEAL	1					
15	9572R–06300	NUT, NYLON	9					
16	GP7–U7831–11	CAP, FUEL FILLER	1					DELUXE BL
	GP7–U7831–01	CAP, FUEL FILLER	1					SPORT PURW
17	GP7–U7832–01	PACKING	1					
18	GP7–U7833–10	SOCKET	1					DELUXE BL
	GP7–U7833–00	SOCKET	1					SPORT PURW
19	GP7–U7835–00	CHAIN BALL	1					
20	90169–049U1	TAPPING SCREW	1					
21	GP7–U7834–00	PACKING FUEL FILLER	1					
22	90267–329UR	RIVET, BLIND	1					
23	GP7–U783F–00	NUT, FUEL FILLER	1					
24	F1K–U7844–01	HOSE	1					
25	90601–155U4	BAND, HOSE 55	2					

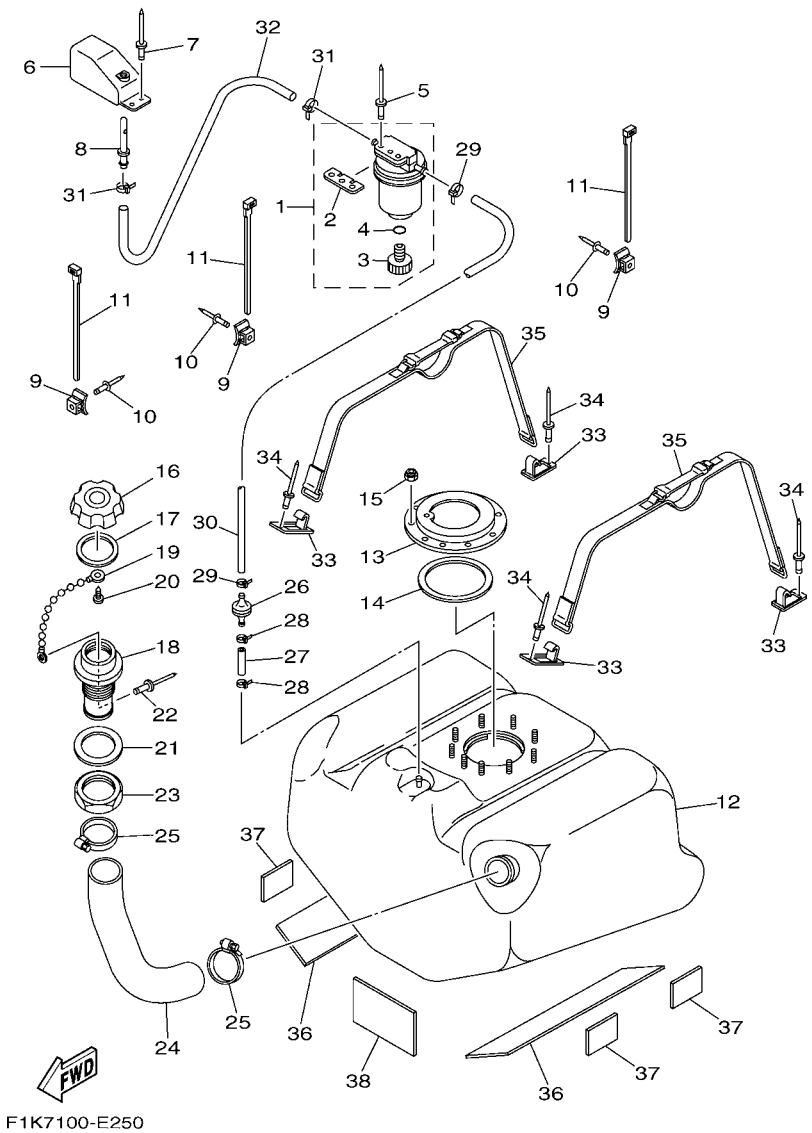

F1K7100-E250

FIG. 25 FUEL TANK

REF. NO.	PART NO.	DESCRIPTION	GENE					REMARKS
26	EU0–67767–31	CHECK VALVE	1					
27	GP7–U785H–00	HOSE, AIR VENT 3	1					
28	90465–11829	CLAMP	2					
29	90465–11829	CLAMP	2					
30	F1K–U785G–00	HOSE, AIR VENT	1					
31	90465–11829	CLAMP	2					
32	F0D–U7856–10	HOSE, AIR VENT 3	1					
33	F1K–U5772–02	HOOK A	4					
34	90267–489U1	RIVET,BLIND	4					
35	F1K–67743–00	BELT, TANK 1	2					
36	F1K–U759B–00	MAT 1	2					
37	F1B–U759C–00	MAT 2	4					
38	F1S–U8221–00	PAD, BATTERY	1					

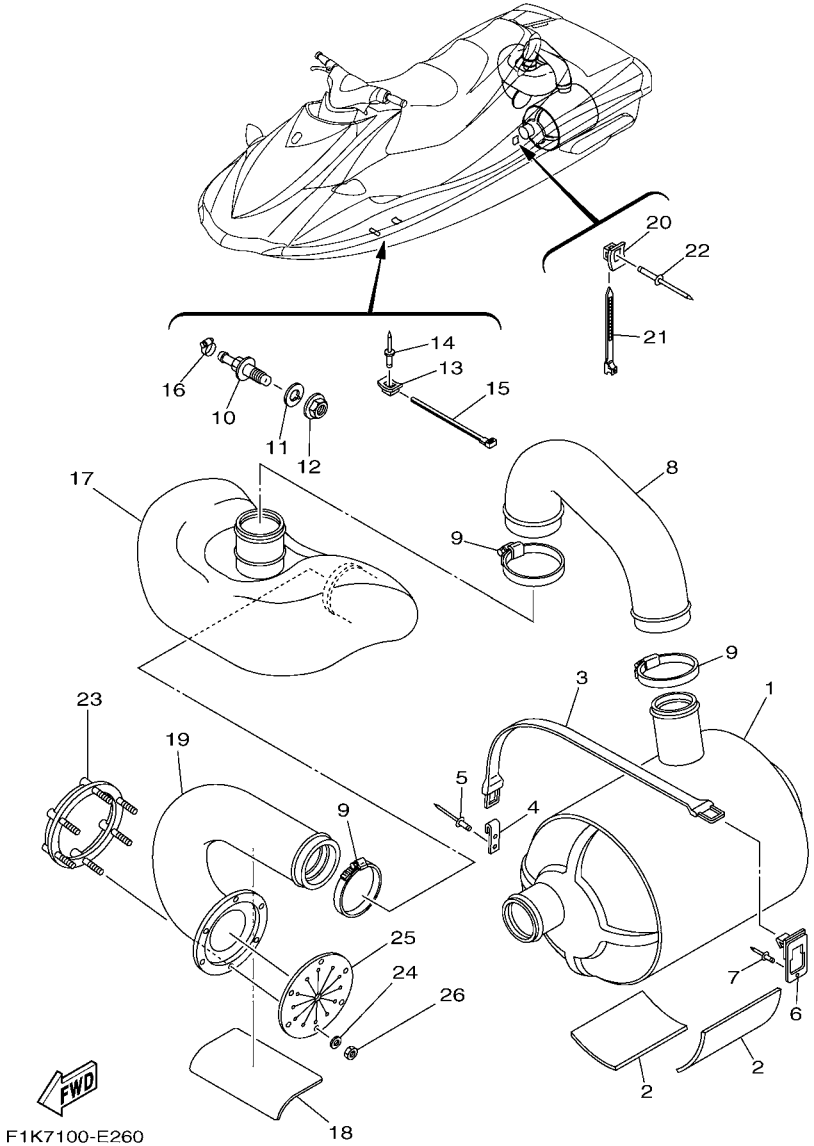

FIG. 26 EXHAUST 3

REF. NO.	PART NO.	DESCRIPTION	GENE					REMARKS
1	F1K–U7550–01	WATER LOCK COMP.	1					
2	F1S–U8221–00	PAD, BATTERY	2					
3	EW2–67821–00	BAND, FUEL TANK	1					
4	GA7–65772–00	HOOK A	1					
5	90267–489U1	RIVET,BLIND	2					
6	F1K–U5772–02	HOOK A	1					
7	90267–489U1	RIVET,BLIND	1					
8	F1K–U7555–00	HOSE, EXHAUST	1					
9	90601–175UR	BAND, HOSE 75	3					
10	F1K–6753B–00	PILOT, WATER	1					
11	F1B–67564–00	GASKET	1					
12	F0X–62733–00	NUT	1					
13	90600–917U4	CLAMP COMP.	1					
14	90267–489U6	RIVET, BLIND	1					
15	90464–32801	CLAMP	1					
16	90601–118UF	BAND, HOSE 18	1					
17	F1K–U4261–00	TANK, WATER	1					
18	F1S–U8221–00	PAD, BATTERY	1					
19	F1K–U758D–00	HOSE,EXHAUST 3	1					
20	90600–917U4	CLAMP COMP.	1					
21	90464–32801	CLAMP	1					
22	90267–489U6	RIVET, BLIND	1					
23	F1S–U757B–00	PLATE	1					
24	9299R–06200	WASHER	6					
25	F1B–U751G–00	VALVE, EXHAUST	1					
26	9572R–06300	NUT, NYLON	6					

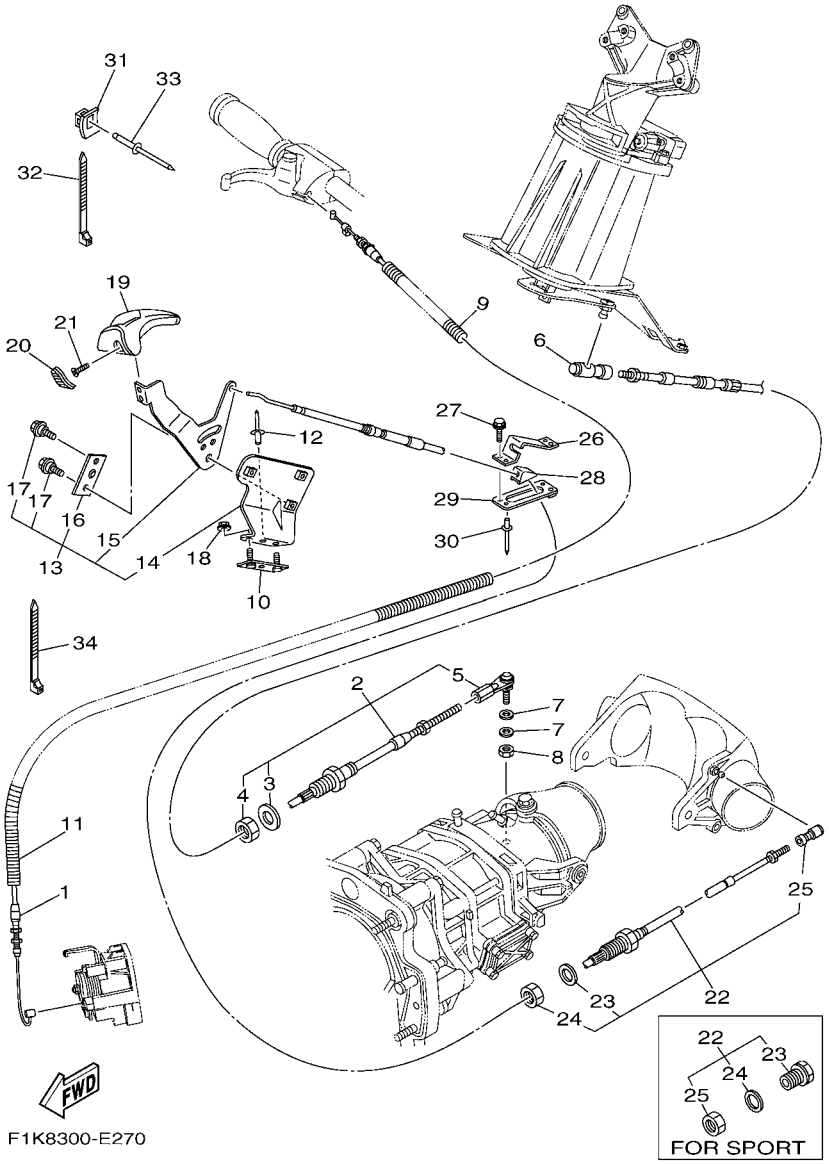

FIG. 27 CONTROL CABLE

REF. NO.	PART NO.	DESCRIPTION	GENE					REMARKS
1	6D3–26311–00	CABLE, THROTTLE 1	1					
2	F1K–61481–00	CABLE, STEERING	1					
3	F1B–61438–00	.PACKING	1					
4	F1B–6151S–00	.NUT	1					
5	F1B–61461–02	.STUD, JOINT BALL	1					
6	GK5–U146F–00	SHAFT,JOINT BALL	1					
7	90201–06906	WASHER, PLATE	2					
8	9538R–06700	NUT	1					
9	F0D–6773E–00	TUBE,2	1					
10	F1K–U826C–02	BRACKET	1					DELUXE
11	90447–06800	HOSE, WITH SPRING	1					
12	90267–489U6	RIVET, BLIND	1					DELUXE
13	F1K–U134A–00	REMOCON. LEVER ASSY.	1					DELUXE
14	F1K–U1794–02	.BRACKET	1					DELUXE
15	F1K–U151N–02	.LEVER	1					DELUXE
16	F1K–U152N–00	.DETENT PLATE	1					DELUXE
17	F1K–U1355–00	.BOLT	2					DELUXE
18	9572R–08300	NUT, FLANGE	2					DELUXE
19	F1K–U2714–02	GRIP	1					DELUXE
20	F1K–U1336–00	DAMPER, STOPPER	1					DELUXE
21	90151–05802	SCREW, COUNTERSUNK	2					DELUXE
22	F1K–6149C–00	CABLE,REVERSE	1					DELUXE
	F1K–67267–00	CONNECTOR, CABLE	1					SPORT
23	F1B–61438–00	.PACKING	1					DELUXE
	F1K–61436–00	.BODY	1					SPORT
24	F1B–6151S–00	.NUT	1					DELUXE
	F1B–61438–00	.PACKING	1					SPORT

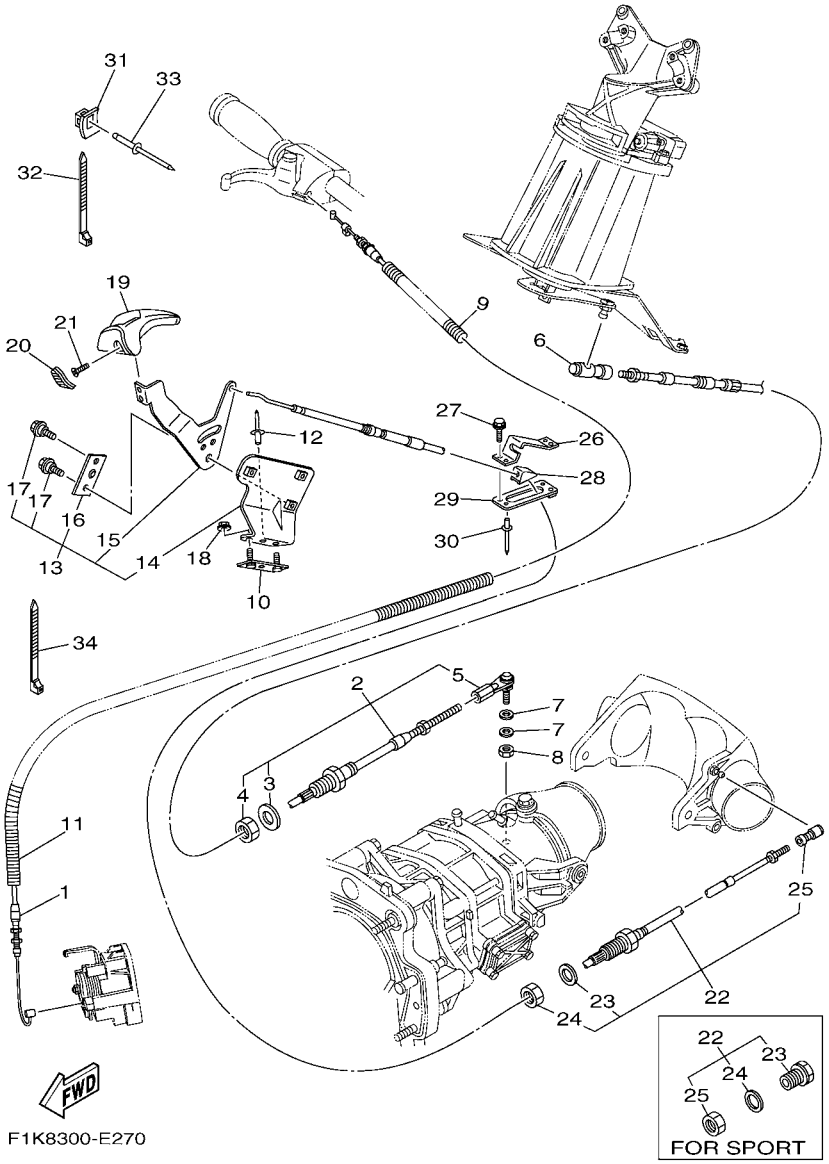

FIG. 27 CONTROL CABLE

REF. NO.	PART NO.	DESCRIPTION	GENE					REMARKS
25	F1B–61460–00	.BALL JOINT ASSY	1					DELUXE
	F1B–6151S–00	.NUT	1					SPORT
26	F1K–U1467–11	BRACKET,STOPPER CABLE	1					DELUXE
27	90119–06858	BOLT, WITH WASHER	2					DELUXE
28	F1K–U146G–00	PACKING, CABLE	1					DELUXE
29	F1K–U1316–01	PLATE, STOPPER	1					DELUXE
30	90267–489U6	RIVET, BLIND	2					DELUXE
31	90600–917U4	CLAMP COMP.	1					DELUXE
32	90464–32801	CLAMP	1					DELUXE
33	90267–489U6	RIVET, BLIND	1					DELUXE
34	90464–40825	CLAMP	1					DELUXE

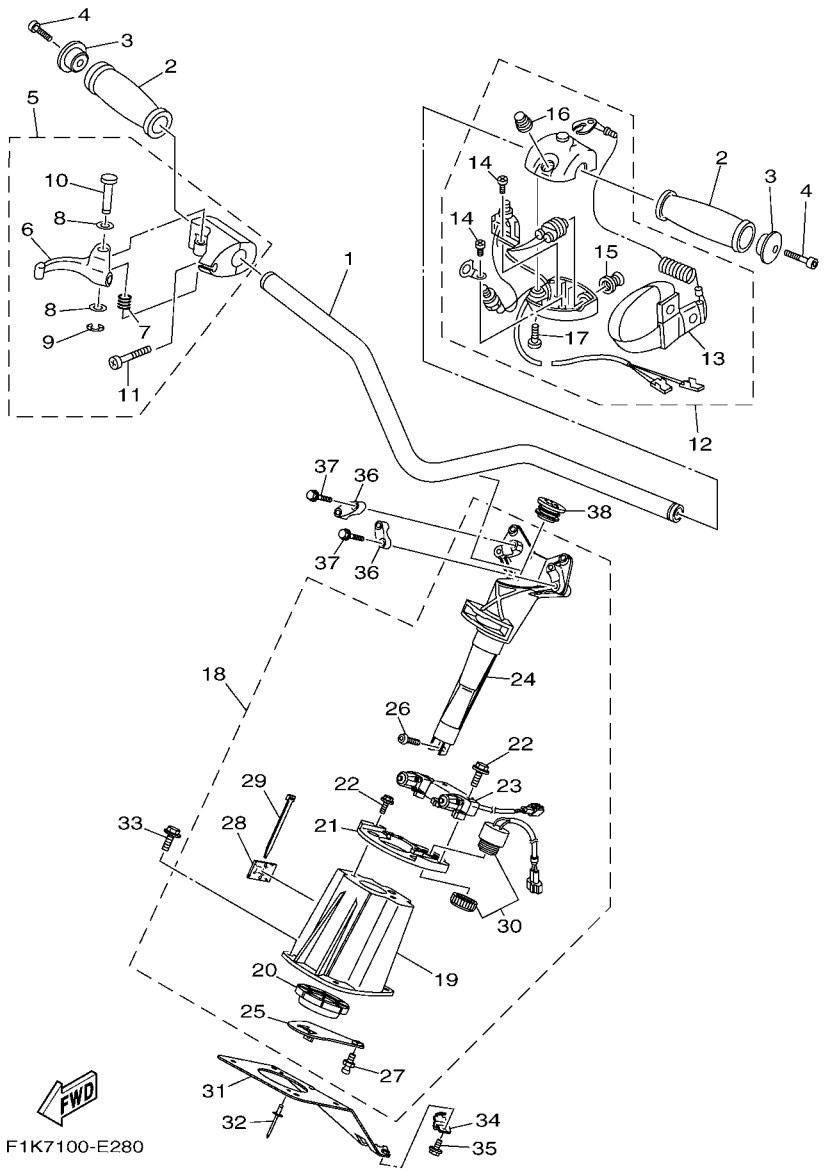

FIG. 28 STEERING 1

REF. NO.	PART NO.	DESCRIPTION	GENE					REMARKS
1	F1K–U1552–00	HANDLE	1					
2	GP7–U155D–00	GRIP, HANDLE	2					
3	GP7–U155F–00	GRIP, END	2					
4	90110–05908	BOLT, HEXAGON SOCKET HEAD	2					
5	F0D–67250–03	THROTTLE LEVER ASSY	1					
6	F0D–67255–01	.LEVER, THROTTLE	1					
7	EW2–67256–00	.SPRING	1					
8	EW2–67258–01	.WASHER	2					
9	EW2–67259–01	.E-RING	1					
10	F0D–67257–00	.SHAFT	1					
11	98580–05025	.SCREW, PAN HEAD	2					
12	FK7–68310–07	SWITCH BOX ASSY	1					
13	EW2–68348–00	.LANYARD, STOP SWITCH	1					
14	97880–03008	.SCREW, PAN HEAD	2					
15	FK7–68312–02	.STOP BUTTON COMP	1					
16	FK7–68313–02	.START BUTTON COMP.	1					
17	97880–05025	.SCREW, PAN HEAD	2					
18	F1K–U154A–04	STEERING COLUMN COMP.	1					
19	F1K–U152M–00	.HOUSING ASSY	1					
20	F1K–U143C–00	.SEAL, RUBBER	1					
21	F1K–U146H–01	.SPACER, BRKT.	1					
22	90119–08826	.BOLT, WITH WASHER	7					
23	F1B–68303–10	.SENSOR ASSY	1					
24	F1K–U1541–02	.COLUMN, STEERING	1					
25	F1K–U151B–02	.ARM, STEERING	1					
26	90111–08826	.BOLT	1					Go to P/N : PE0-WV-060007
27	GH3–U146E–00	.STUD, JOINT BALL	1					

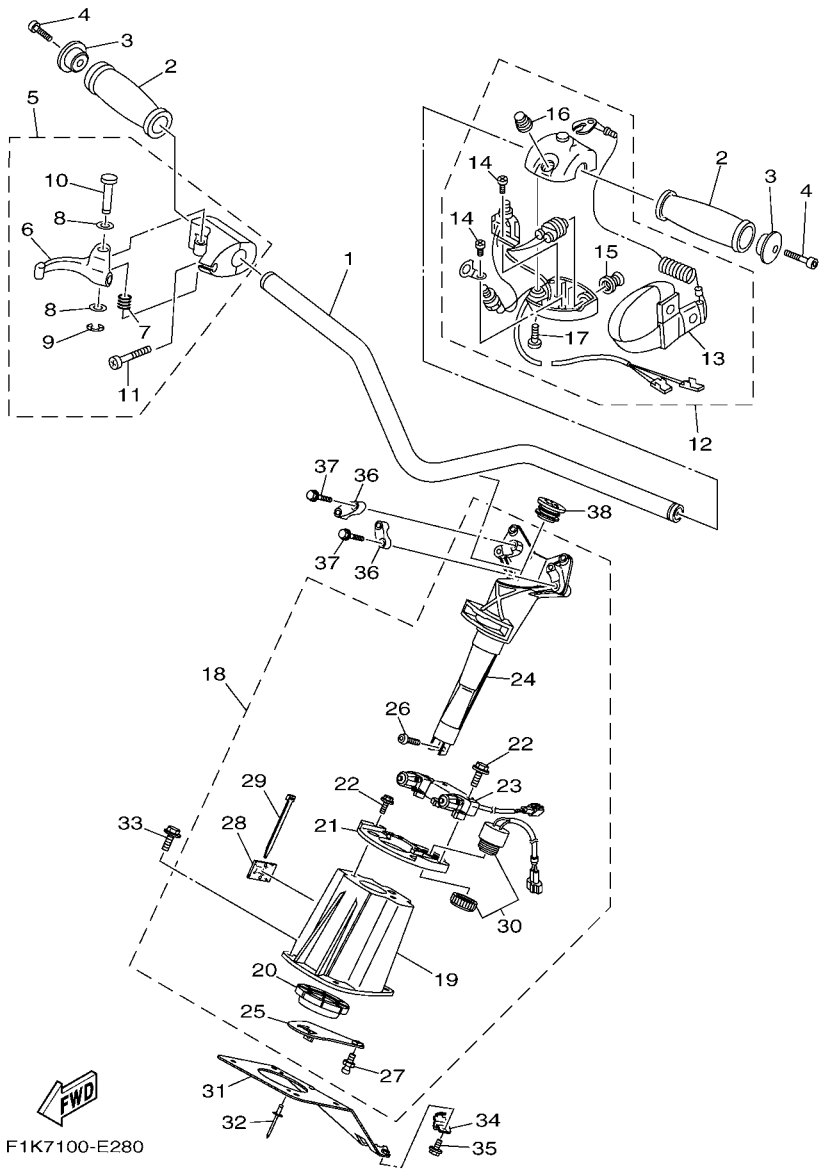

FIG. 28 STEERING 1

REF. NO.	PART NO.	DESCRIPTION	GENE					REMARKS
28	90600–900U6	.BASE, CLAMP	1					
29	90601–200U1	.BAND	1					
30	F1S–68341–00	.BUZZER	1					
31	F1K–U1467–00	BRACKET,STOPPER CABLE	1					
32	90267–48806	RIVET, BLIND	2					
33	90119–08836	BOLT, WITH WASHER	4					
34	F1K–U1468–03	STOPPER, CABLE	1					
35	90119–069UH	BOLT, WITH WASHER	1					
36	EU0–23814–30	HOLDER, HANDLE UPPER	2					
37	90119–089UU	BOLT, WITH WASHER	4					
38	F0M–61469–00	PACKING, STEERING COLUMN	1					

PARTS NEWS

YAMAHA
YAMAHA MOTOR CO., LTD.
2500 SHINGAI IWATA SHIZUOKA JAPAN

News No. PE0-WV-060007

Date: August 28, 2006

Signature: K . Otsuka

Model	VX1100(A)-E (F1K8/B)
Subject	PARTS CATALOGUE CORRECTIONS
CATALOGUE NO.	1EF1K-300E1

Revised parts catalogue will be issued by PDF and be uploaded to YPEC within one month.
(YPEC=Yamaha Parts Electrical Catalogue = Website parts catalogue)

1. PARTS CATALOGUE LIST

FIG.NO.	REF.NO.	OLD P/NO.	**NEW P/NO.**	PART NAME	QT'Y	REMARKS	***1**	NOTE
6	16	6D3-13795-00	**6D3-13795-01**	JOINT, THROTLE BODY 1	4		D	
28	26	90119-089U7	**90111-08826**	.BOLT	1			

* These changes are applied from initial production.

***1**: Interchangeability

A	Old Parts New Parts	Old Parts New Parts
B	Old Parts New Parts	Old Parts New Parts
C	Old Parts New Parts	Old Parts New Parts
D	Old Parts New Parts	Old Parts New Parts
	These parts are interchangeable with a set	

Thank you very much for your cooperation.

Parts Manager Check	Service Manager Check	Parts Manager File

YAMAHA MOTOR CO.,LTD
2500 Shingai Iwata Shizuoka 438-8501.Japan
Technical Publication Dept.

YAMAHA GENUINE Parts & Accessories

FIG. 29 STEERING 2

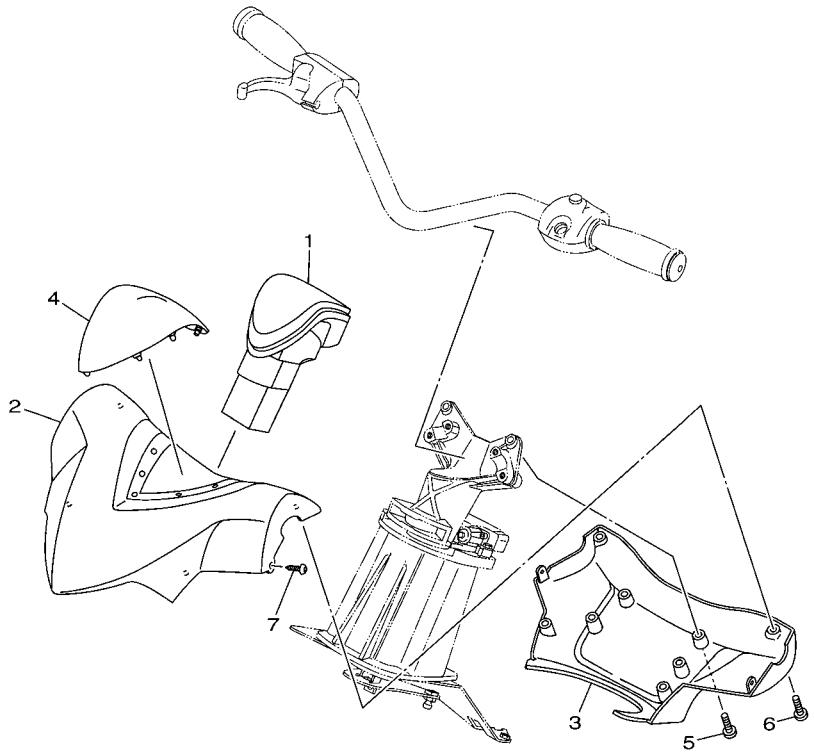

F1K1100-D290

REF. NO.	PART NO.	DESCRIPTION	GENE					REMARKS
1	F1K–U156E–00	PAD 1	1					
2	F1K–U143D–01	PAD, STEERING 1	1					
3	F1K–U143E–00	PAD, STEERING 2	1					
4	F1K–U142D–00	COVER, PAD	1					
5	90154–06017	SCREW, BINDING	4					
6	90149–05903	SCREW	4					
7	90167–04003	SCREW, TAPPING	2					

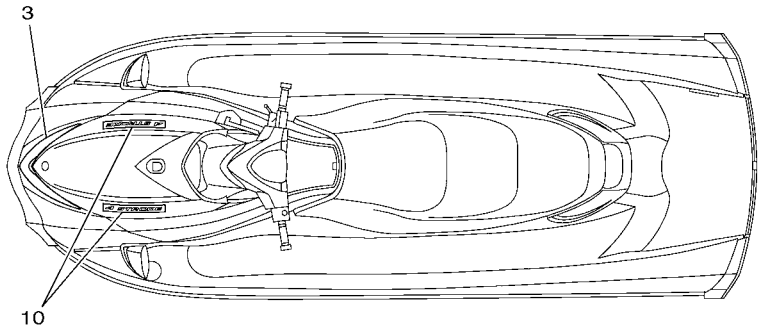

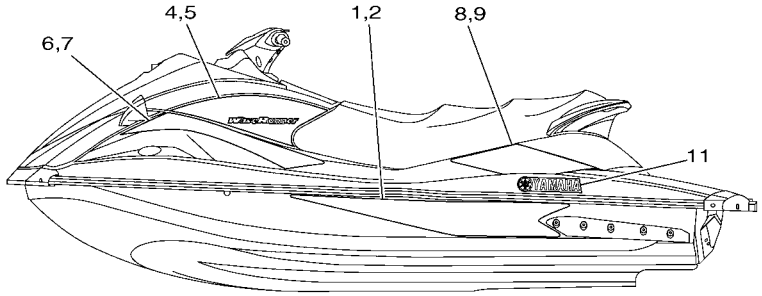

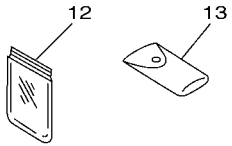

F1K7100-E300

FIG. 30 GRAPHICS

REF. NO.	PART NO.	DESCRIPTION	GENE					REMARKS
1	F1K–U417B–30	GRAPHIC 1 (LH)	1					DELUXE RED
	F1K–U417B–40	GRAPHIC 1 (LH)	1					DELUXE BLUE
	F1K–U417B–50	GRAPHIC 1 (LH)	1					SPORT BLUE
2	F1K–U417C–30	GRAPHIC 2 (RH)	1					DELUXE RED
	F1K–U417C–40	GRAPHIC 2 (RH)	1					DELUXE BLUE
	F1K–U417C–50	GRAPHIC 2 (RH)	1					SPORT BLUE
3	F1K–U417D–30	GRAPHIC 3	1					DELUXE RED
	F1K–U417D–40	GRAPHIC 3	1					DELUXE BLUE
	F1K–U417D–50	GRAPHIC 3	1					SPORT BLUE
4	F1K–U417F–30	GRAPHIC 5 (LH)	1					DELUXE RED
	F1K–U417F–40	GRAPHIC 5 (LH)	1					DELUXE BLUE
	F1K–U417F–50	GRAPHIC 5 (LH)	1					SPORT BLUE
5	F1K–U417G–30	GRAPHIC 6 (RH)	1					DELUXE RED
	F1K–U417G–40	GRAPHIC 6 (RH)	1					DELUXE BLUE
	F1K–U417G–50	GRAPHIC 6 (RH)	1					SPORT BLUE
6	F1K–U417H–30	GRAPHIC 7 (LH)	1					DELUXE RED
	F1K–U417H–40	GRAPHIC 7 (LH)	1					DELUXE BLUE
	F1K–U417H–50	GRAPHIC 7 (LH)	1					SPORT BLUE
7	F1K–U417J–30	GRAPHIC 8 (RH)	1					DELUXE RED
	F1K–U417J–40	GRAPHIC 8 (RH)	1					DELUXE BLUE
	F1K–U417J–50	GRAPHIC 8 (RH)	1					SPORT BLUE
8	F1K–U417K–30	GRAPHIC 9 (LH)	1					DELUXE RED
	F1K–U417K–40	GRAPHIC 9 (LH)	1					DELUXE BLUE
	F1K–U417K–50	GRAPHIC 9 (LH)	1					SPORT BLUE
9	F1K–U417L–30	GRAPHIC B (RH)	1					DELUXE RED
	F1K–U417L–40	GRAPHIC B (RH)	1					DELUXE BLUE
	F1K–U417L–50	GRAPHIC B (RH)	1					SPORT BLUE

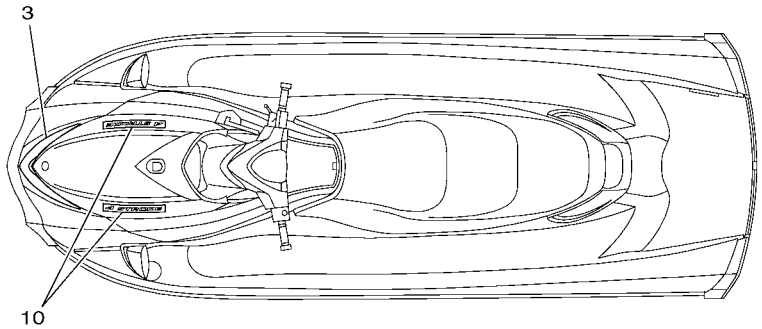

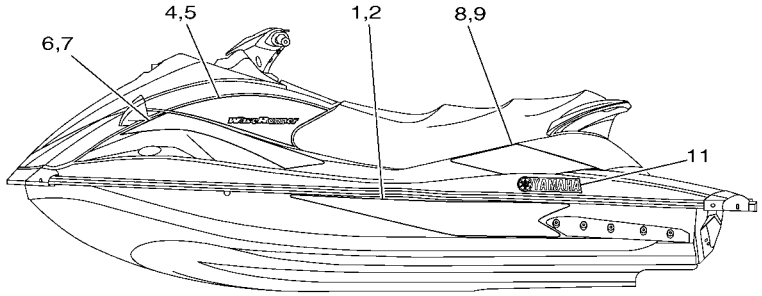

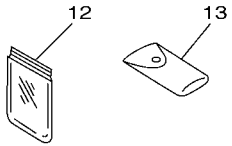

F1K7100-E300

FIG. 30 GRAPHICS

REF. NO.	PART NO.	DESCRIPTION	GENE					REMARKS
10	F1K–U417M–30	GRAPHIC C	2					DELUXE RED
	F1K–U417M–40	GRAPHIC C	2					DELUXE BLUE
	F1K–U417M–50	GRAPHIC C	2					SPORT BLUE
11	F1S–U411C–40	EMBLEM, YAMAHA	2					DELUXE RED
	F1S–U411C–10	EMBLEM, YAMAHA	2					DELUXE BLUE
	F1K–U411C–50	EMBLEM, YAMAHA	2					SPORT BLUE
12	F1B–65986–00	TOOL SET	1					
13	EU0–65901–01	TOOL BAG	1					

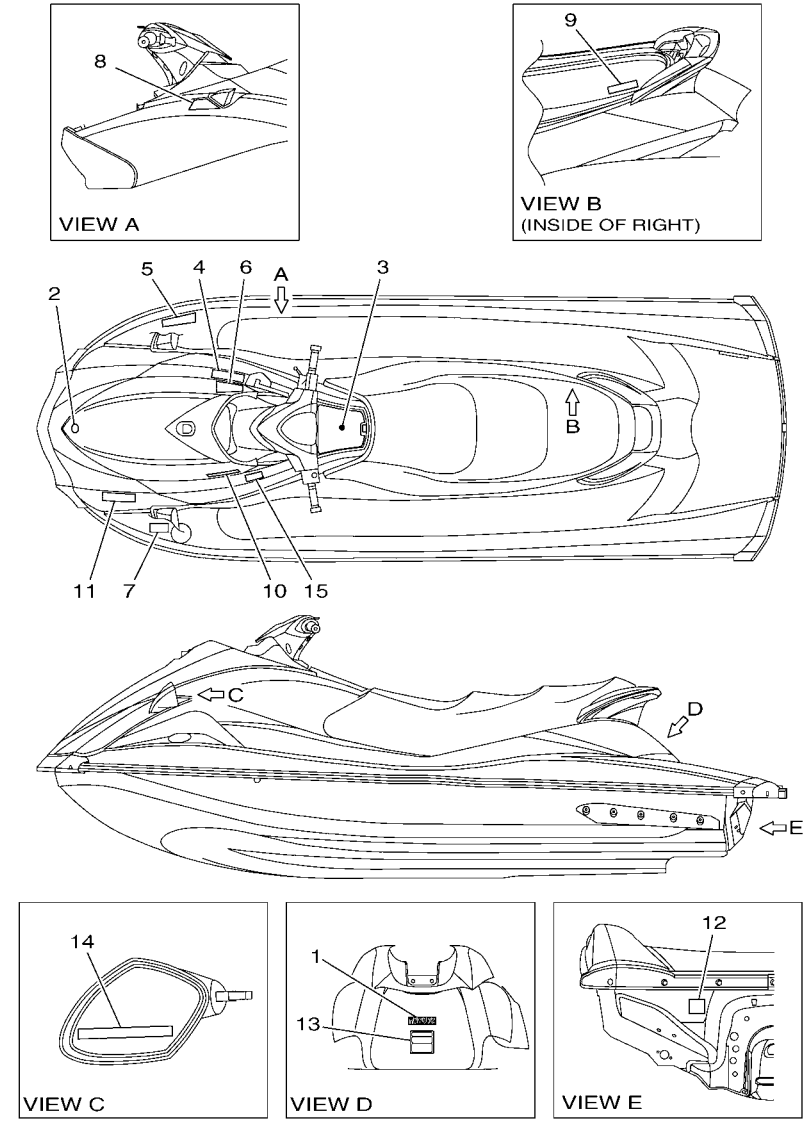

F1K8300-E310

FIG. 31 IMPORTANT LABELS

REF. NO.	PART NO.	DESCRIPTION	GENE					REMARKS
1	F1B–U411C–10	EMBLEM, YAMAHA	1					DELUXE RED
	F1S–U411C–00	EMBLEM, YAMAHA	1					DELUXE BLUE
	F1B–U411C–02	EMBLEM, YAMAHA	1					SPORT BLUE
2	F1K–U411H–00	EMBLEM, TUNING FORK	1					
3	F1K–U41B1–11	LABEL, WARNING UNIFORM 1	1					
4	F1B–U41B1–21	LABEL, WARNING UNIFORM 1	1					
5	F1B–U41B1–31	LABEL, WARNING UNIFORM 1	1					DELUXE
	F0V–U41B1–31	LABEL, WARNING UNIFORM 1	1					SPORT
6	F1B–U41B2–01	LABEL, WARNING UNIFORM 2	1					
7	F1S–U415B–11	LABEL, WARNING(FUEL)	1					DELUXE
	F1B–U415B–11	LABEL, WARNING(FUEL)	1					SPORT
8	F0V–U41D5–31	LABEL, WARNING SHIFT LEVER	1					
9	F0V–U41DB–12	LABEL, WARNING BATTERY	1					
10	F1B–U41F5–21	LABEL, FIRE EXTINGUISHER 1	1					
11	GP8–U416H–01	LABEL,WARNING(FRANCE)	1					DELUXE
	GJ3–U416H–01	LABEL,WARNING(FRANCE)	1					SPORT
12	F1G–U418F–00	LABEL, RIGHTING	1					DELUXE
	GA9–U418F–00	LABEL, RIGHTING	1					SPORT
13	F1S–U41E1–11	LABEL, SET 1	1					DELUXE
	F0V–U41E1–41	LABEL, SET 1	1					SPORT
14	GJ1–U419F–21	LABEL,5	2					
15	F1X–U413P–01	LABEL, BUILDERS PLATE	1					

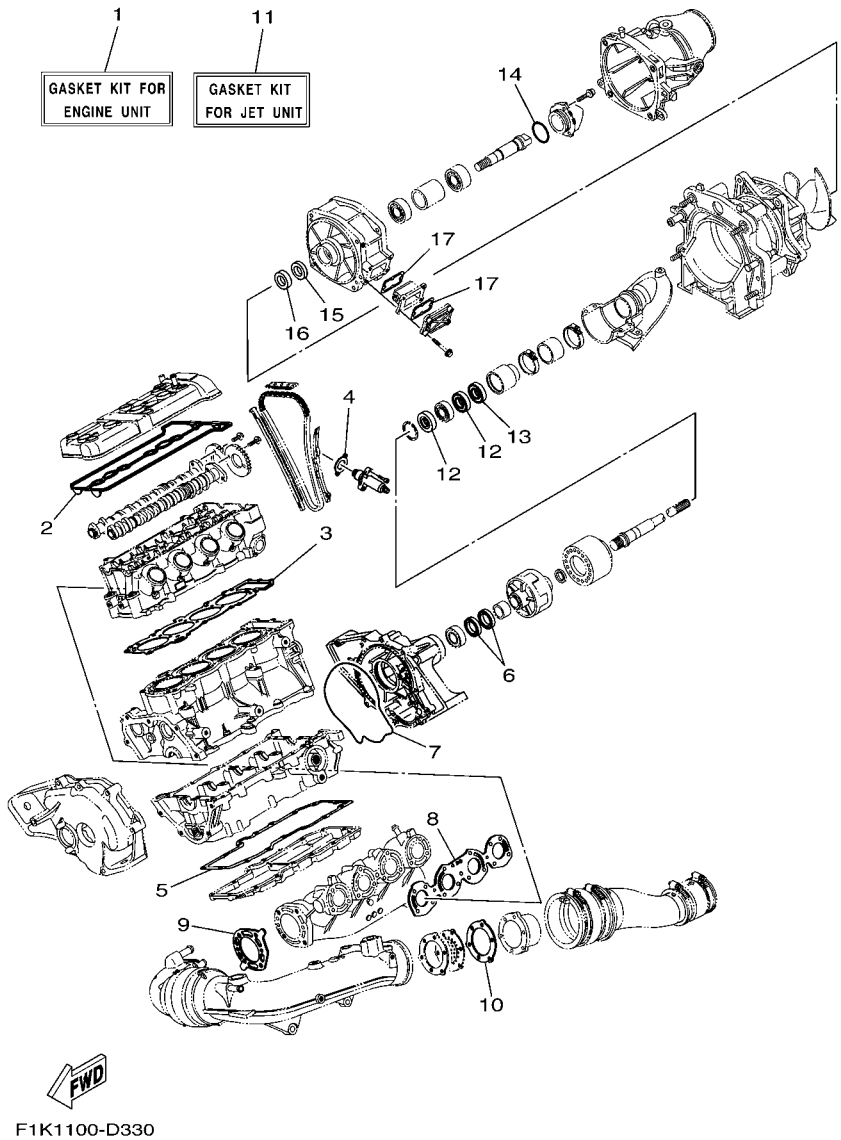

FIG. 32 REPAIR KIT 1

REF. NO.	PART NO.	DESCRIPTION	GENE					REMARKS
1	6D3–W0001–00	GASKET KIT FOR ENGINE UNIT	1					
2	60E–11193–01	.GASKET, HEAD COVER 1	1					
3	6D3–11181–00	.GASKET, CYLINDER HEAD 1	1					
4	4FM–12213–00	.GASKET, TENSIONER CASE	1					
5	6B6–13557–00	.GASKET	1					
6	93101–35004	.OIL SEAL	2					
7	6B6–13475–00	.GASKET	1					
8	6D3–14613–00	.GASKET, EXHAUST PIPE	1					
9	6D3–14739–00	.GASKET, MUFFLER DAMPER 1	1					
10	60E–14623–00	.GASKET, EXHAUST PIPE	2					
11	6D3–W0001–20	GASKET KIT FOR JET UNIT	1					
12	93101–25M55	.OIL SEAL	2					
13	93101–25M56	.OIL SEAL	1					
14	93210–464A3	.O-RING	1					
15	93101–21002	.OIL SEAL	1					
16	93101–21001	.OIL SEAL	1					
17	66V–42414–00	.O-RING	2					

PART NO.	REF. NO.
6D3–11102–00–94	1 – 2
4KG–1111G–00	1 – 21
6D3–11125–00	7 – 29
6D3–11126–00	7 – 24
3TJ–11133–10	1 – 3
1WG–11133–11	1 – 4
6D3–11164–00	7 – 20
6D3–11165–00	8 – 19
6D3–11166–00	7 – 31
6D3–11167–00	8 – 31
6D3–11181–00	1 – 22
	32 – 3
6D3–1118A–00	1 – 18
6D3–11191–00–94	1 – 17
60E–11193–01	1 – 19
	32 – 2
6E5–11325–00	8 – 12
68V–11325–02	2 – 11
69J–11327–01–94	2 – 13
67F–11328–00	2 – 12
60E–11372–10	9 – 5
60E–11411–11	3 – 1
6D3–11416–00	3 – 2
6D3–11416–10	3 – 2
6D3–11416–20	3 – 2
6D3–11416–30	3 – 2
6D3–11416–A0	3 – 2
6B6–11478–00	3 – 15
6D3–11603–00	3 – 4
6D3–11631–00–B0	3 – 3
6D3–11633–00	3 – 5
6D3–11650–00	3 – 7
5JW–11654–00	3 – 8
60E–11656–00	3 – 10
60E–11656–10	3 – 10
60E–11656–20	3 – 10
60E–11656–30	3 – 10
4XV–12111–00	4 – 5
4XV–12112–00	4 – 6
4XV–12113–00	4 – 10
4XV–12114–00	4 – 11
1HX–12116–01	4 – 8
1HX–12117–00	4 – 12
1WG–12117–00	4 – 13
1HX–12118–00	4 – 14
1WG–12118–00	4 – 15
4SV–12119–00	4 – 17
4TV–12119–00	4 – 16

PART NO.	REF. NO.
5LV–12121–00	4 – 7
3GM–12126–00	4 – 9
3FV–12153–10	4 – 20
3LN–12153–10	4 – 19
1HX–12168–00	4 – 18
1HX–12168–20	4 – 18
1HX–12168–40	4 – 18
1HX–12168–60	4 – 18
1HX–12168–80	4 – 18
1HX–12168–A0	4 – 18
1HX–12168–F0	4 – 18
1HX–12168–H1	4 – 18
1HX–12168–K1	4 – 18
1HX–12168–M1	4 – 18
1HX–12168–R1	4 – 18
1HX–12168–U1	4 – 18
1HX–12168–W1	4 – 18
1HX–12168–Y1	4 – 18
1HX–12169–11	4 – 18
1HX–12169–31	4 – 18
1HX–12169–50	4 – 18
1HX–12169–70	4 – 18
1HX–12169–90	4 – 18
1HX–12169–E0	4 – 18
1HX–12169–G0	4 – 18
1HX–12169–J0	4 – 18
1HX–12169–L0	4 – 18
1HX–12169–N0	4 – 18
1HX–12169–T0	4 – 18
6D3–12171–10	4 – 1
6D3–12176–00	4 – 3
6D3–12181–00	4 – 2
6D3–12210–00	4 – 23
4FM–12213–00	4 – 24
	32 – 4
5BE–12241–00	4 – 22
6D3–12251–00	4 – 26
4XV–12252–00	4 – 27
6D3–12411–00	10 – 31
60E–12413–10–94	10 – 32
60E–12417–10–94	10 – 30
60E–12435–00	10 – 38
6D3–1243A–00	10 – 10
6D3–12446–00	10 – 34
6D3–1244G–00	10 – 26
60E–12474–00	1 – 32
6D3–12482–00	1 – 27
60E–12483–10	1 – 31

PART NO.	REF. NO.
60E–12494–00	1 – 30
6D3–12494–00	10 – 35
60E–12495–00	1 – 36
6B6–12499–00	10 – 41
60E–12537–00	1 – 33
6D3–12577–00	10 – 23
63M–12580–00	10 – 5
60E–12581–00	10 – 3
60E–12584–00	10 – 14
6D3–12584–00	10 – 18
6D3–12880–00	6 – 4
6B6–1310A–00–94	2 – 16
6B6–13151–00–94	8 – 27
60E–13161–00	2 – 20
6D3–13300–01	7 – 2
6B6–13317–00	8 – 5
6B6–13327–01–94	7 – 7
6B6–13360–00	7 – 1
6B6–13411–00	7 – 10
60E–13421–00	8 – 7
5GH–13440–00	2 – 25
6D3–13443–00–94	8 – 22
60E–13446–00	8 – 1
6D3–13462–00–94	8 – 3
6D3–13463–00–94	8 – 14
60E–13473–00	8 – 18
60E–13475–00	8 – 15
6B6–13475–00	7 – 12
	32 – 7
60E–13476–10	8 – 23
6D3–13477–00	8 – 20
6B6–13557–00	32 – 5
6B6–13557–01	2 – 18
6D3–13563–00	7 – 3
68V–13573–00	6 – 5
6D3–13641–00	6 – 2
6D3–13750–00	6 – 1
60E–13761–10	6 – 13
6D3–13795–00	6 – 16
60E–13907–01	18 – 1
60E–14147–00	6 – 14
6D3–14294–00	6 – 10
6D3–14305–10	17 – 1
6D3–14411–00	5 – 1
6D3–14413–00	6 – 18
6D3–14414–00	6 – 19
6D3–14419–00	5 – 8
6D3–14421–00	5 – 3

PART NO.	REF. NO.
6D3–14437–00	5 – 7
63P–14446–00	6 – 7
60E–14449–00	6 – 20
6D3–14451–00	5 – 4
4XV–14452–00	5 – 2
6D3–14457–00	6 – 3
68V–14475–00	6 – 6
6D3–14493–00–8P	17 – 3
6D3–14495–00	5 – 13
6D3–14613–00	9 – 3
	32 – 8
6D3–14615–00	9 – 14
60E–14623–00	9 – 24
	32 – 10
6D3–14625–00	9 – 16
6D3–1469W–00	9 – 26
6D3–14711–00–94	9 – 4
6D3–14712–00–94	9 – 9
6D3–14721–00–94	9 – 18
6D3–14739–00	9 – 10
	32 – 9
6D3–14752–00–94	9 – 28
6B6–1475E–00	9 – 29
6D3–1475F–00	9 – 30
60E–14784–00–94	9 – 25
6D3–15100–00–94	2 – 1
60E–15362–00	8 – 17
6D3–15515–00	14 – 1
60E–15517–00	14 – 2
60E–15521–00	14 – 3
4WM–15590–00	14 – 4
6D3–17572–00	3 – 11
6B6–17585–00	3 – 18
6B6–17586–00	3 – 19
EU0–23814–30	28 – 36
60E–24300–01	6 – 12
6D3–24387–00	18 – 6
60E–24474–00	18 – 4
6D3–24481–00	18 – 5
70R–24489–00	25 – 4
70R–24543–00	25 – 3
6D3–26311–00	27 – 1
67F–2812A–00	16 – 19
66V–42414–00	11 – 10
	32 – 17
67X–44517–10–94	2 – 27
6D3–44574–00	2 – 28
66V–45214–00–94	11 – 11

PART NO.	REF. NO.
6D3–45235–00	12 – 3
6D3–45332–00–94	12 – 2
6D3–45511–00	11 – 19
6D3–45514–00	11 – 16
65V–45538–00	11 – 14
6D3–45593–00–94	12 – 8
6D3–45813–00–94	3 – 12
6D3–4581J–00	12 – 1
66V–46882–00	11 – 9
61X–51162–00	21 – 2
66V–51312–01–94	11 – 5
6B6–51315–01–94	11 – 8
6B6–51326–10	11 – 20
60E–51341–00–94	8 – 33
6D3–52358–00	13 – 8
F1K–61436–00	27 – 23
F1B–61438–00	27 – 3
F1B–61460–00	27 – 25
F1B–61461–02	27 – 5
F0M–61469–00	28 – 38
F1K–61481–00	27 – 2
F1K–6149C–00	27 – 22
F1B–6151S–00	27 – 4
F0X–61624–00	21 – 20
F1K–61624–00	21 – 20
F1K–61628–00	21 – 16
GP7–61628–00	21 – 16
	24 – 13
F0X–61637–00	21 – 23
EU0–61652–00	10 – 9
	21 – 6
F0X–61652–00	21 – 24
EW2–62140–00	25 – 1
EW2–62142–00	25 – 2
F1G–62149–00	25 – 8
GP7–62159–02	25 – 6
GJ3–6215F–00	18 – 15
EU0–62241–30	18 – 22
FN8–6269B–00	21 – 5
F0X–62733–00	26 – 12
GU2–62875–01	19 – 11
GJ3–63850–03	24 – 4
F1K–6517C–00	20 – 6
F0X–6517R–01	19 – 10
GA7–65772–00	26 – 4
EU0–65901–01	30 – 13
F1B–65986–00	30 – 12
F0D–67250–03	28 – 5

PART NO.	REF. NO.
F0D–67255–01	28 – 6
EW2–67256–00	28 – 7
F0D–67257–00	28 – 10
EW2–67258–01	28 – 8
EW2–67259–01	28 – 9
F1K–67267–00	27 – 22
F1K–6753B–00	26 – 10
F1B–67564–00	26 – 11
F0D–6773E–00	27 – 9
F1K–67743–00	25 – 35
F1B–67747–00	25 – 14
EU0–67767–31	25 – 26
EW2–67821–00	26 – 3
F1K–6820A–01	18 – 17
F1K–6820A–11	18 – 17
GU2–6822E–01	18 – 19
60E–682E0–00	18 – 2
F1B–68303–10	28 – 23
FK7–68310–07	28 – 12
FK7–68312–02	28 – 15
FK7–68313–02	28 – 16
F1S–68341–00	28 – 30
EW2–68348–00	28 – 13
68V–81147–00	6 – 8
60E–81315–00	17 – 20
60E–81328–00	14 – 18
66V–8132W–00	16 – 17
6D3–81337–00–94	14 – 13
6D3–81410–00	14 – 7
6D3–81450–00	14 – 6
6D3–81800–00	15 – 1
3AJ–81809–00	15 – 6
6M6–81826–00	15 – 4
6M6–81830–00	15 – 2
6M6–81840–10	15 – 8
11H–81844–00	15 – 5
66V–81844–00	16 – 18
6D3–81845–00	14 – 21
1FK–81847–00	15 – 3
6M6–81850–00	15 – 7
6D3–81921–00	16 – 8
6B6–81940–00	16 – 15
60E–81950–00	16 – 13
68V–81950–00	16 – 14
6D3–81960–00	16 – 24
EU0–82110–09	18 – 7
6D3–82115–00	16 – 5
6D3–82116–00	16 – 31

PART NO.	REF. NO.
6D3–82117–00	16 – 6
67F–82151–00	16 – 9
67F–82151–10	16 – 10
67F–82151–30	16 – 11
67F–82151–40	16 – 12
6D3–82157–00	16 – 7
6D3–82170–00	16 – 4
6B6–82310–00	17 – 7
6A0–82317–00	7 – 21
	16 – 22
68V–82504–00	17 – 19
60E–82532–00	17 – 21
60E–82556–00	18 – 3
6D3–82560–01	17 – 15
60E–82560–A1	17 – 12
60E–8259E–00	16 – 16
6D3–8259L–01	16 – 32
6D3–8259L–A1	16 – 32
6D3–8273J–00	17 – 22
6B6–83623–00	8 – 25
60E–83627–00	8 – 26
68F–83688–00	6 – 9
682–84385–01	10 – 8
6D3–85132–00	1 – 25
61A–85790–00	17 – 10
6D3–85896–00	17 – 17
6D3–8591A–10	16 – 20
6D3–8591A–B0	16 – 20
6D3–85991–01	16 – 26
6B6–86261–10	17 – 26
6B6–86265–10	17 – 27
67X–E2590–10	10 – 48
6D3–G5831–00	11 – 2
6D3–R1313–00	11 – 33
6D3–R1314–00	13 – 1
6D3–R1318–00	11 – 25
6D3–R1319–00	11 – 23
6D3–R1321–02	11 – 24
6D3–R1333–00–94	11 – 1
6D3–R1341–00	11 – 32
60E–R1381–01	12 – 12
F1K–U043H–00	5 – 17
F1K–U1316–01	27 – 29
F1K–U1336–00	27 – 20
F1K–U134A–00	27 – 13
F1K–U1355–00	27 – 17
F1K–U135C–00	20 – 11
F1K–U142D–00	29 – 4

PART NO.	REF. NO.
F1K–U143C–00	28 – 20
F1K–U143D–01	29 – 2
F1K–U143E–00	29 – 3
EU0–U1461–02	13 – 11
F1K–U1467–00	28 – 31
F1K–U1467–11	27 – 26
F1K–U1468–03	28 – 34
GH3–U146E–00	28 – 27
GK5–U146F–00	27 – 6
F1K–U146G–00	27 – 28
F1K–U146H–01	28 – 21
F1K–U151B–02	28 – 25
F1K–U151N–02	27 – 15
F1K–U152M–00	28 – 19
F1K–U152N–00	27 – 16
F1K–U1541–02	28 – 24
F1K–U154A–04	28 – 18
F1K–U1552–00	28 – 1
GP7–U155D–00	28 – 2
GP7–U155F–00	28 – 3
F1K–U156E–00	29 – 1
F1B–U1653–01	21 – 19
F1K–U1794–02	27 – 14
F1K–U2103–00	20 – 2
F1K–U2127–00	23 – 1
F1K–U213G–00	23 – 2
F1K–U2155–00	12 – 15
F1K–U2187–00	23 – 10
F1K–U2188–00	23 – 11
F1S–U2280–00	21 – 32
F1S–U2285–00	21 – 33
F1K–U2501–01	22 – 1
F1K–U2512–03	22 – 7
F1K–U2519–01	22 – 8
F1K–U2519–10	22 – 8
F1K–U251D–01	22 – 10
F1K–U251E–01	22 – 11
F1K–U2521–02	22 – 2
F1K–U2663–00	20 – 4
F1K–U2664–01	24 – 3
F1K–U266B–00	20 – 5
F1K–U266C–00	19 – 4
F1K–U2714–02	27 – 19
F1K–U271B–04	24 – 9
F1K–U2723–00	19 – 2
F1K–U273B–03	11 – 36
F1K–U283B–02	20 – 14
F1K–U351H–10	22 – 14

PART NO.	REF. NO.
F1K–U351J–10	22 – 15
F1K–U351K–10	22 – 16
F1K–U351M–10	22 – 17
F1K–U3581–10	22 – 13
F1K–U371A–11	24 – 1
F1K–U371A–21	24 – 1
F1K–U371B–10	24 – 2
F1K–U371B–20	24 – 2
F1K–U3774–00	24 – 16
F1K–U378C–00	24 – 6
F1S–U411C–00	31 – 1
F1B–U411C–02	31 – 1
F1B–U411C–10	31 – 1
F1S–U411C–10	30 – 11
F1S–U411C–40	30 – 11
F1K–U411C–50	30 – 11
F1K–U411H–00	31 – 2
F1X–U413P–01	31 – 15
F1B–U415B–11	31 – 7
F1S–U415B–11	31 – 7
GJ3–U416H–01	31 – 11
GP8–U416H–01	31 – 11
F1K–U417B–30	30 – 1
F1K–U417B–40	30 – 1
F1K–U417B–50	30 – 1
F1K–U417C–30	30 – 2
F1K–U417C–40	30 – 2
F1K–U417C–50	30 – 2
F1K–U417D–30	30 – 3
F1K–U417D–40	30 – 3
F1K–U417D–50	30 – 3
F1K–U417F–30	30 – 4
F1K–U417F–40	30 – 4
F1K–U417F–50	30 – 4
F1K–U417G–30	30 – 5
F1K–U417G–40	30 – 5
F1K–U417G–50	30 – 5
F1K–U417H–30	30 – 6
F1K–U417H–40	30 – 6
F1K–U417H–50	30 – 6
F1K–U417J–30	30 – 7
F1K–U417J–40	30 – 7
F1K–U417J–50	30 – 7
F1K–U417K–30	30 – 8
F1K–U417K–40	30 – 8
F1K–U417K–50	30 – 8
F1K–U417L–30	30 – 9
F1K–U417L–40	30 – 9

PART NO.	REF. NO.
F1K–U417L–50	30 – 9
F1K–U417M–30	30 – 10
F1K–U417M–40	30 – 10
F1K–U417M–50	30 – 10
F1G–U418F–00	31 – 12
GA9–U418F–00	31 – 12
GJ1–U419F–21	31 – 14
F1K–U41B1–11	31 – 3
F1B–U41B1–21	31 – 4
F0V–U41B1–31	31 – 5
F1B–U41B1–31	31 – 5
F1B–U41B2–01	31 – 6
F0V–U41D5–31	31 – 8
F0V–U41DB–12	31 – 9
F1S–U41E1–11	31 – 13
F0V–U41E1–41	31 – 13
F1B–U41F5–21	31 – 10
F1K–U4261–00	26 – 17
F0V–U471E–00	19 – 16
F1K–U471E–02	20 – 13
F0V–U471F–00	19 – 18
F1K–U475F–01	20 – 21
F1K–U491K–00	22 – 3
GP7–U4953–10	21 – 18
	24 – 14
F1K–U515A–00	20 – 8
F1K–U516N–02–P0	19 – 1
F1K–U516N–10–P0	19 – 1
F1K–U516N–20–P0	19 – 1
F1K–U517B–00–P0	20 – 1
F1K–U517B–10–P0	20 – 1
F1K–U517B–20–P0	20 – 1
F1K–U517D–05	20 – 10
F1K–U517F–01	20 – 19
F1K–U517H–01	19 – 9
F1K–U517R–00	20 – 12
F1K–U518E–03	20 – 9
F1K–U519D–00	19 – 13
F1K–U5633–02	19 – 14
F1B–U5646–00	19 – 21
F1K–U5772–02	18 – 10
	25 – 33
	26 – 6
F1S–U596B–10	19 – 15
F1S–U596C–10	19 – 17
F1K–U5983–01	20 – 24
EU0–U7354–00–01	2 – 33
EU0–U7354–00–03	2 – 33

PART NO.	REF. NO.
EU0–U7354–00–05	2 – 33
EU0–U7354–00–10	2 – 33
EU0–U7354–00–20	2 – 33
F1B–U751G–00	26 – 25
F1K–U7550–01	26 – 1
F1K–U7555–00	26 – 8
F1K–U7557–00	11 – 42
F1S–U757B–00	26 – 23
F1K–U757E–00	11 – 46
F1K–U757F–00	11 – 47
F1K–U758D–00	26 – 19
F1K–U759B–00	25 – 36
F1B–U759C–00	25 – 37
F1K–U759C–00	20 – 23
F1B–U761D–02	21 – 8
F1K–U7711–02	25 – 12
F1B–U7773–00	25 – 13
GP7–U7831–01	25 – 16
GP7–U7831–11	25 – 16
GP7–U7832–01	25 – 17
GP7–U7833–00	25 – 18
GP7–U7833–10	25 – 18
GP7–U7834–00	25 – 21
GP7–U7835–00	25 – 19
GP7–U783F–00	25 – 23
F1K–U7844–01	25 – 24
F0D–U7856–10	25 – 32
F1K–U785G–00	25 – 30
F0D–U785G–10	18 – 13
GP7–U785H–00	25 – 27
F1K–U815D–00	16 – 1
F1K–U8169–00	21 – 31
F1K–U8211–01	18 – 9
F1K–U821D–00	18 – 12
F1K–U8221–00	18 – 8
F1S–U8221–00	25 – 38
	26 – 2
F1S–U826C–00	17 – 5
F1K–U826C–02	27 – 10
F1K–U828K–00	20 – 25
F1G–U8572–00	11 – 38
F1K–U8572–02	5 – 14
F1K–U8577–00	11 – 39
F1K–U883B–00	12 – 18
F1K–U883E–00	12 – 13
F1S–U883N–01	21 – 26
F1S–U883P–01	21 – 27
F1B–U883T–02	21 – 29

PART NO.	REF. NO.
F1F–U883T–02	21 – 28
F1S–U8K31–02	18 – 21
6D3–W0001–00	32 – 1
6D3–W0001–20	32 – 11
6D3–W009A–10–94	1 – 1
6D3–W009B–00–94	2 – 3
90101–069U0	11 – 50
90105–06026	1 – 9
90105–06033	2 – 9
90105–06035	10 – 33
90105–06036	8 – 16
90105–06054	10 – 40
90105–06790	9 – 27
90105–06826	20 – 15
90105–06M07	8 – 24
90105–06M17	2 – 10
90105–07004	4 – 4
90105–08860	21 – 30
90105–093A5	2 – 5
90105–105A6	14 – 10
90109–06051	2 – 8
90109–066F0	1 – 20
90109–06832	12 – 14
90109–06M92	2 – 29
90109–08041	11 – 43
90110–05908	28 – 4
90110–06040	21 – 25
90110–06822	11 – 22
90110–08041	7 – 5
90110–08212	14 – 5
90111–05008	18 – 18
90111–06803	22 – 4
90116–10016	8 – 29
90116–10619	2 – 4
90119–06048	17 – 24
90119–06800	11 – 12
90119–06820	24 – 10
90119–06827	11 – 49
90119–06835	11 – 6
90119–06858	19 – 8
	27 – 27
90119–069UD	12 – 10
90119–069UH	20 – 18
	28 – 35
90119–069UK	11 – 40
90119–069UP	24 – 5
90119–069UX	13 – 4
90119–06M35	16 – 21

PART NO.	REF. NO.
90119–06M65	7 – 23
90119–08031	9 – 13
90119–08034	7 – 14
90119–08036	9 – 7
90119–08043	7 – 15
90119–08045	7 – 13
90119–08050	6 – 21
90119–08074	6 – 22
90119–08075	9 – 8
90119–08085	7 – 6
90119–08823	2 – 31
	11 – 37
90119–08826	28 – 22
90119–08836	28 – 33
90119–08840	11 – 34
	13 – 2
90119–089U7	11 – 52
	28 – 26
90119–089UR	2 – 30
90119–089UU	12 – 16
	28 – 37
90119–08M22	5 – 11
	16 – 29
90119–08MA3	17 – 2
90119–10011	9 – 21
90119–10013	9 – 23
90119–10016	14 – 14
90119–10017	9 – 22
90119–10020	8 – 4
90119–10804	24 – 17
90119–10805	11 – 41
90119–10836	11 – 4
90119–10837	11 – 31
90119–10M02	8 – 28
90119–10M19	14 – 15
90149–05903	29 – 6
90150–05807	18 – 23
90151–05802	27 – 21
90154–06017	29 – 5
90159–05013	5 – 5
90159–05014	5 – 6
90159–059U2	20 – 7
90167–04003	29 – 7
90169–049U1	25 – 20
90169–059U1	22 – 9
90176–10001	1 – 16
	8 – 30
90179–08327	3 – 9

PART NO.	REF. NO.
90179–10006	1 – 14
90179–10414	1 – 15
90183–06902	19 – 7
90201–06801	13 – 6
90201–06906	27 – 7
90201–096J9	2 – 6
90201–099U3	2 – 32
	16 – 2
	24 – 7
90201–10013	1 – 12
90201–10019	1 – 13
90201–103U7	14 – 11
90201–248M5	12 – 9
90209–25008	3 – 20
90267–329UR	25 – 22
90267–47801	22 – 12
90267–48806	23 – 12
	28 – 32
90267–48809	20 – 3
90267–489U1	18 – 11
	25 – 34
	26 – 5
90267–489U2	25 – 5
90267–489U6	18 – 25
	23 – 4
	25 – 7
	26 – 14
	27 – 12
90267–489U8	21 – 11
90267–489U9	17 – 6
90269–08801	20 – 22
90269–09805	19 – 3
90280–03047	14 – 12
90340–27001	1 – 7
90387–06080	11 – 48
90387–06083	10 – 42
90387–06119	7 – 22
	16 – 23
90387–06M05	8 – 10
90387–06M30	13 – 5
90387–06M60	12 – 11
90387–08M06	11 – 35
90387–08M30	13 – 3
90387–08M37	16 – 27
90387–11002	9 – 20
90401–20145	2 – 26
90430–06014	1 – 11
90430–09002	6 – 15

PART NO.	REF. NO.
90430–12002	11 – 45
90445–14008	11 – 28
90445–16005	9 – 1
90445–16006	11 – 26
90445–18007	10 – 19
90445–18M03	10 – 21
90445–20805	21 – 1
90445–21004	10 – 43
90445–21007	10 – 15
90445–21805	10 – 1
90445–25004	10 – 37
90445–26004	10 – 28
90446–14M23	17 – 14
90446–20MF5	11 – 29
90446–24M79	10 – 7
90446–27M55	21 – 3
90447–06800	27 – 11
90447–22001	10 – 16
90447–22004	10 – 2
90447–22005	10 – 44
90450–17M17	6 – 11
90450–57006	6 – 17
90450–88M15	9 – 17
90450–94001	9 – 32
90450–99004	9 – 31
90450–99005	9 – 15
90464–12089	5 – 10
90464–18006	7 – 28
90464–21001	7 – 27
90464–31001	1 – 24
	10 – 46
90464–32801	18 – 20
	21 – 10
	23 – 8
	25 – 11
	26 – 15
	27 – 32
90464–35132	10 – 47
	16 – 30
90464–40825	5 – 18
	27 – 34
90464–99804	23 – 5
90465–11829	11 – 30
	18 – 16
	25 – 28
90465–12M53	8 – 9
90465–13M18	17 – 25
90467–089U1	18 – 14

PART NO.	REF. NO.
90467–110A1	7 – 30
90467–120A0	10 – 36
90467–150A0	10 – 6
90467–160A0	9 – 2
	10 – 20
90467–170A0	7 – 25
	8 – 32
90467–200A0	10 – 4
	21 – 14
90467–240A0	10 – 29
90467–250A0	21 – 15
90468–12069	3 – 6
90480–06M46	8 – 36
90480–21M63	9 – 19
90480–22M15	5 – 9
	16 – 28
90600–900U6	28 – 28
90600–917U4	18 – 24
	21 – 9
	23 – 3
	25 – 9
	26 – 13
	27 – 31
90601–118UF	11 – 27
	21 – 4
	26 – 16
90601–155U4	25 – 25
90601–162U5	12 – 17
90601–175UR	5 – 16
	26 – 9
90601–200U1	21 – 12
	28 – 29
90601–200U2	18 – 29
90601–200U7	23 – 6
90605–502U1	19 – 12
91317–05010	14 – 20
91317–05014	8 – 6
91317–05016	8 – 21
91317–06014	8 – 8
	14 – 19
91317–06016	1 – 29
	7 – 11
91317–06035	14 – 8
91380–06016	17 – 18
91380–06020	8 – 35
91380–06025	4 – 25
91808–16023	1 – 8
92990–06100	15 – 10

PART NO.	REF. NO.
92990–10600	17 – 11
92990–12200	11 – 44
	21 – 22
92995–06600	8 – 34
9299R–05200	21 – 35
9299R–06200	19 – 5
	20 – 17
	22 – 5
	24 – 11
	26 – 24
9299R–08200	19 – 19
9299R–10200	24 – 18
93101–21001	11 – 17
	32 – 16
93101–21002	11 – 18
	32 – 15
93101–25M55	12 – 4
	32 – 12
93101–25M56	12 – 7
	32 – 13
93101–35004	3 – 13
	32 – 6
93210–06667	2 – 21
93210–08001	2 – 24
93210–18322	8 – 2
93210–18417	1 – 28
93210–464A3	11 – 21
	32 – 14
93210–60ME8	17 – 23
93212–04001	14 – 17
93306–07801	3 – 14
93306–205A3	12 – 6
93306–205U0	11 – 15
93306–27211	11 – 13
93306–30441	7 – 8
93306–30610	3 – 16
93430–47M04	12 – 5
93440–07149	1 – 5
93440–10153	1 – 6
93440–28062	3 – 21
93603–14M15	2 – 17
93606–12019	9 – 11
	11 – 7
93606–25M00	7 – 19
93607–54002	4 – 28
93608–16M16	7 – 18
	9 – 6
	14 – 16

PART NO.	REF. NO.
94591–49130	4 – 21
94702–00409	17 – 9
95023–06012	1 – 10
95027–06010	2 – 22
95380–06700	15 – 11
9538R–06600	13 – 7
9538R–06700	27 – 8
9572R–05300	21 – 36
9572R–06300	11 – 51
	19 – 6
	20 – 16
	22 – 6
	24 – 12
	25 – 15
	26 – 26
9572R–08300	5 – 15
	16 – 3
	19 – 20
	21 – 17
	24 – 8
	27 – 18
95780–08300	17 – 4
95880–06016	17 – 8
97513–05514	14 – 9
97513–06520	2 – 19
97513–06525	7 – 4
97513–06535	7 – 17
97513–06555	1 – 23
	7 – 16
97513–08520	1 – 26
97513–08530	15 – 9
97595–06416	17 – 13
97595–06520	2 – 14
	8 – 11
97595–08540	2 – 15
97880–03008	28 – 14
97880–05025	28 – 17
9788R–05025	21 – 34
98580–05025	28 – 11
98780–04015	8 – 13
99009–52500	7 – 9
99009–72500	3 – 17
99530–08012	2 – 23
99530–10014	2 – 2
99590–14016	11 – 3
99780–12600	21 – 21