YAMAHA

PARTS CATALOGUE

WaveRunner VX

VX1100-H (F2L8,F2L9,F2LA/6D3W,6D3X/6D31)

MJ-VX1100 ’09 (F2L8/6D3W/6D31)

1HF2L-100EA

( )

YAMAHA GENUINE Parts & Accessories

2014/2/25

NEWS NO.	DATE	COMMENT
PE0-WV-090003	Feb.,18,2009	IMPORTANT LABELS LIST CORRECTION
PE0-WV-090004	Feb.,18,2009	IMPORTANT LABELS LIST CORRECTION
PE0-WV-090006	Feb.,18,2009	IMPORTANT LABELS LIST CORRECTION
PE0-WV-090011	July,28,2009	MOD: ELECTRICAL 1 RECTIFIER & REGULATOR ASSY LIST REVISION
PE0-WV-140001	Feb.,6,2014	COR:FIG.11 JET UNIT 1 ILLUST. CORRECTUION

VX1100-H
PARTS CATALOGUE
©2008 by Yamaha Motor Co., Ltd.
1st edition, August 2008
All rights reserved.
Any reprinting or unauthorized use
without the written permission of
Yamaha Motor Co., Ltd.
is expressly prohibited.
Printed in Japan.

FOREWORD

This Parts Catalogue is related to the parts for the model(s) on the cover page. When you are ordering replacement parts, please refer to this Parts Catalogue and quote both part numbers and part names correctly.

1. Modifications or additions which have been made after the issue of the Parts Catalogue will be announced in the Parts News.
   It is advisable that you make the necessary corrections to the Parts Catalogue according to the Parts News.

2. Abbreviations
   The following abbreviations are used in this Parts Catalogue.

   “UR” Use specified parts number.
   “UN” Use as many as needed.
   “AP” Alternate Parts
   “LM” Locally Made (Parts need to be ordered locally)
   “F#” Frame No. (Applicable machine No.)
   “O/S” Over Size

3. The number of components for assembly
   - Parts, which are to be supplied in an assembly, are listed with a dot (.) in front of the part name as shown below.
   - The numeral appearing to the right of each component part indicates the quantity of parts for each assembly unit.

PART NO.	DESCRIPTION	Q’TY	REMARKS
2F5–83310–60	FRONT FLASHER LIGHT ASSY	2	
115–83311–60	.BULB (6V–18W)	1	

4. Applicable colours of graphics are represented in the “REMARKS” as shown below.

PART NO.	DESCRIPTION	Q’TY	REMARKS
2N4–24110–00–X5	FUEL TANK COMP.	2	MXR
3J1–24240–10	.GRAPHIC, FUEL TANK	1	FOR MXR

5. Note that the illustrations for reference in finding parts numbers are not to be used for assembling. When assembling, please use the applicable service manual.

6. The asterisk (*) before a reference number indicates modified items after the first edition.

7. Applicable Serial No.

Engine Serial No.

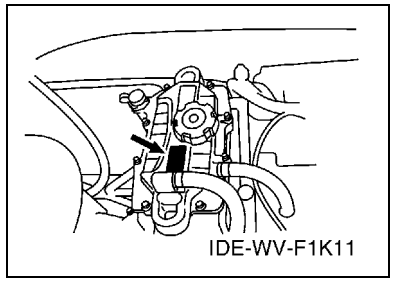

Hull Serial No.

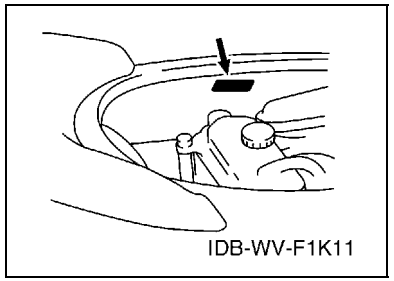

8. Applicable Colour Code (The (*) mark shows Model colour.)

Abbreviation	Colour Name	Colour Code
PURW(*)	PURE WHITE	0240
SS4(*)	BLACK SOLID 4	008P
DPBMT	DEEP PURPLISH BLUE METALLIC T	0978

9. Quantity Column Information

Column No.	Name Of Q'ty Column	Destination
1	CAN	CANADA
2	EUR	EUROPE
3	GENE	EXCEPT CANADA, EUROPE, JAPAN
4	JPN	JAPAN

10. Applicable Starting Serial No.

Engine Serial No.

Serial No.	Name Of Q'ty Column	Model Code
6D3-1074501	CAN	6D3W
6D3-1074501	EUR	6D3X
6D3-1074501	GENE	6D3W
6D3-1074501	JPN	6D3W

Hull Serial No.

Serial No.	Name Of Q'ty Column	Model Code
F2L-800901	CAN	F2L8
F2L-800401	EUR	F2LA
F2L-800201	GENE	F2L9
F2L-800902	JPN	F2L8

CONTENTS

CYLINDER 1
CRANKCASE 3
CRANKSHAFT & PISTON 5
VALVE 7
INTAKE 9
INTAKE 2 10
OIL PUMP 11
OIL COOLER 13
EXHAUST 1 15
EXHAUST 2 17
JET UNIT 1 19
JET UNIT 2 21
GENERATOR 22
STARTING MOTOR 23
ELECTRICAL 1 24
ELECTRICAL 2 26
ELECTRICAL 3 27
ENGINE HATCH 1 29
ENGINE HATCH 2 30
HULL & DECK 31
GUNWALE & MAT 33
VENTILATION 34
SEAT & UNDER LOCKER 35
FUEL TANK 36
EXHAUST 3 38
CONTROL CABLE 39
STEERING 1 40
STEERING 2 42
GRAPHICS 43
IMPORTANT LABELS 44
IMPORTANT LABELS 2 45
IMPORTANT LABELS 3 46
REPAIR KIT 1 47

INDEX

NUMERICAL INDEX 48

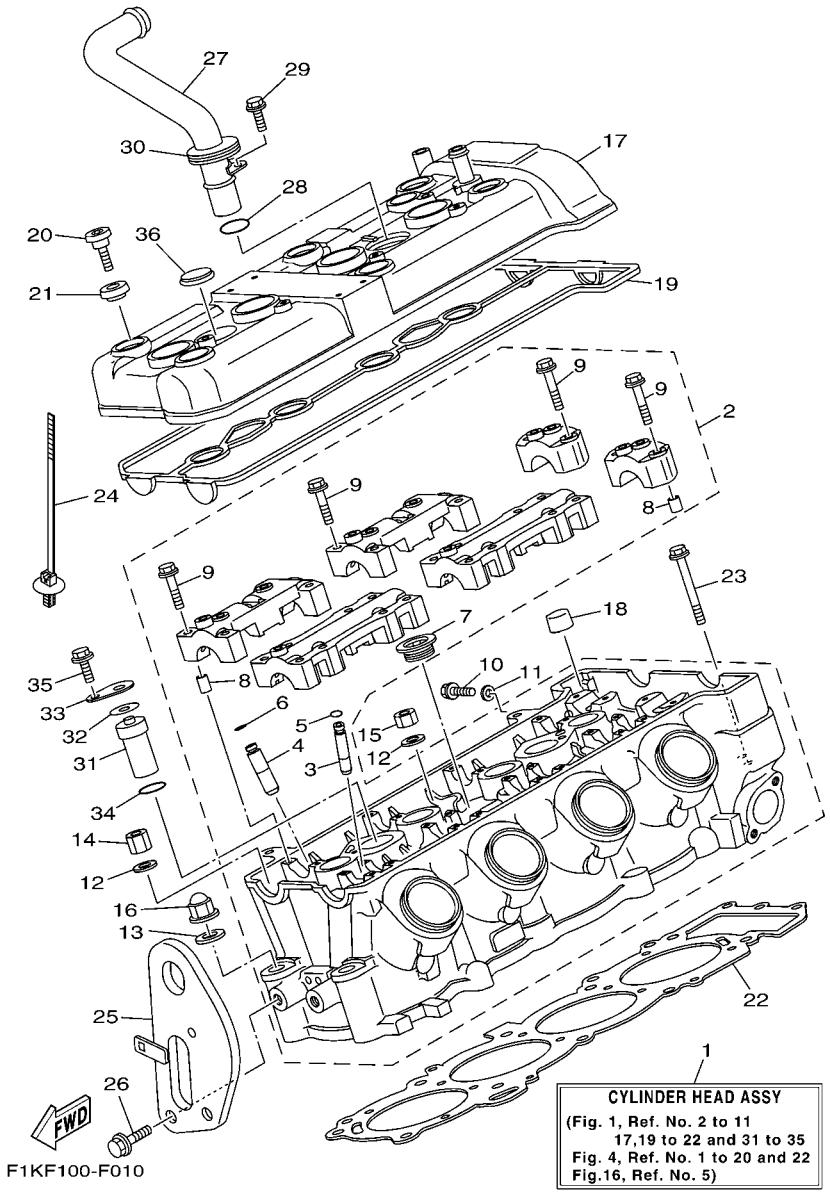

FIG. 1 CYLINDER

REF. NO.	PART NO.	DESCRIPTION	CAN	EUR	GENE	JPN		REMARKS
1	6D3–W009A–10–94	CYLINDER HEAD ASSY	1	1	1	1		
2	6D3–11102–00–94	CYLINDER HEAD ASSY	1	1	1	1		
3	3TJ–11133–10	.GUIDE, VALVE	12	12	12	12		
4	1WG–11133–11	.GUIDE, VALVE	8	8	8	8		
5	93440–07149	.CIRCLIP	12	12	12	12		
6	93440–10153	.CIRCLIP	8	8	8	8		
7	90340–27001	.PLUG, STRAIGHT SCREW	1	1	1	1		
8	91808–16023	.PIN, DOWEL	12	12	12	12		
9	90105–06026	.BOLT, FLANGE	28	28	28	28		
10	95023–06012	BOLT	1	1	1	1		
11	90430–06014	GASKET	1	1	1	1		
12	90201–10013	WASHER, PLATE	8	8	8	8		
13	90201–10019	WASHER, PLATE	2	2	2	2		
14	90179–10006	NUT	3	3	3	3		
15	90179–10414	NUT	5	5	5	5		
16	90176–10001	NUT, CROWN	2	2	2	2		
17	6D3–11191–01–94	COVER, CYLINDER HEAD 1	1	1	1	1		
18	6D3–1118A–00	COVER	1	1	1	1		
19	60E–11193–01	GASKET, HEAD COVER 1	1	1	1	1		
20	90109–066F0	BOLT	6	6	6	6		
21	4KG–1111G–00	RUBBER, MOUNT 1	6	6	6	6		
22	6D3–11181–00	GASKET, CYLINDER HEAD 1	1	1	1	1		
23	97513–06555	BOLT, WITH WASHER	3	3	3	3		
24	90464–31001	CLAMP	1	1	1	1		
25	6D3–85132–00	BRACKET, REFLECTOR 1	1	1	1	1		
26	97513–08520	BOLT, WITH WASHER	2	2	2	2		
27	6D3–12482–00	PIPE 2	1	1	1	1		

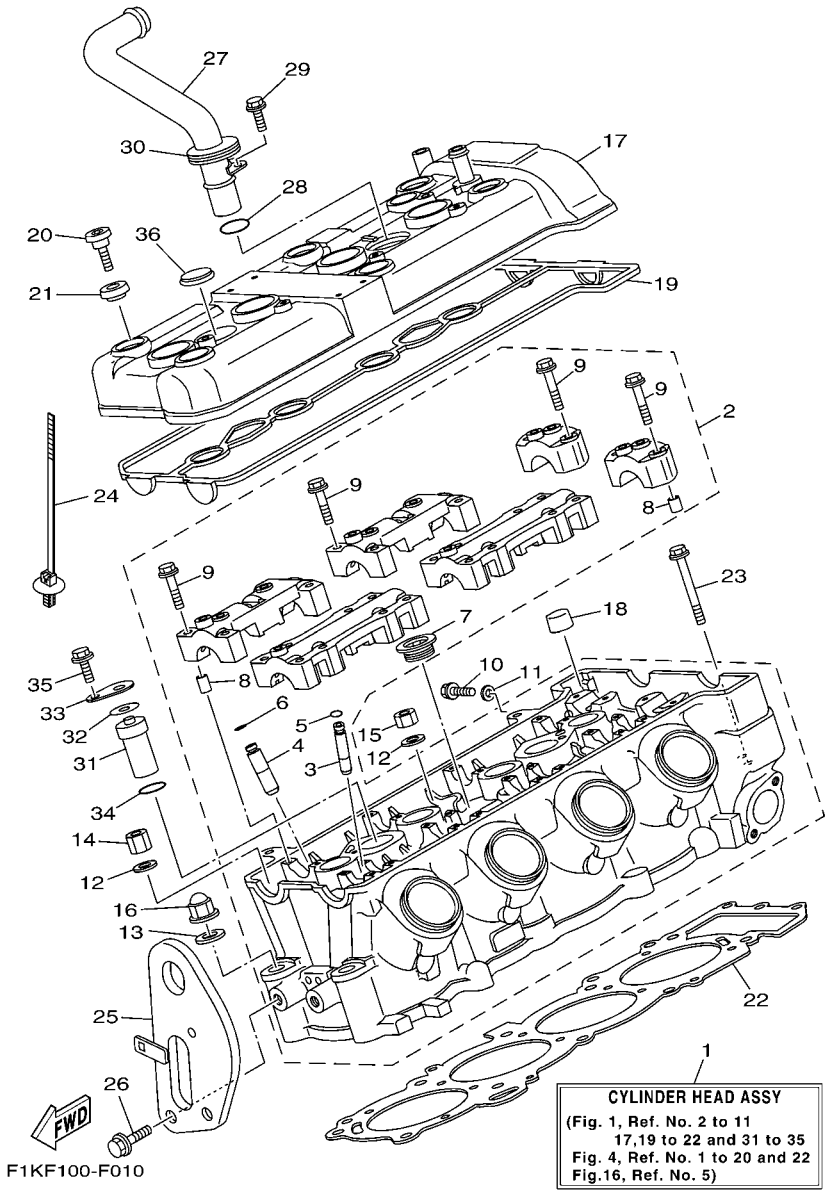

FIG. 1 CYLINDER

REF. NO.	PART NO.	DESCRIPTION	CAN	EUR	GENE	JPN		REMARKS
28	93210–18417	O-RING	1	1	1	1		
29	91317–06016	BOLT	1	1	1	1		
30	60E–12494–00	SEAL, PIPE 1	1	1	1	1		
31	60E–12483–10	PIPE 3	1	1	1	1		
32	60E–12474–00	GASKET 1	1	1	1	1		
33	60E–12537–00	PLATE 2	1	1	1	1		
34	93210–18417	O-RING	1	1	1	1		
35	91317–06016	BOLT	1	1	1	1		
36	60E–12495–00	SEAL, PIPE 2	1	1	1	1		

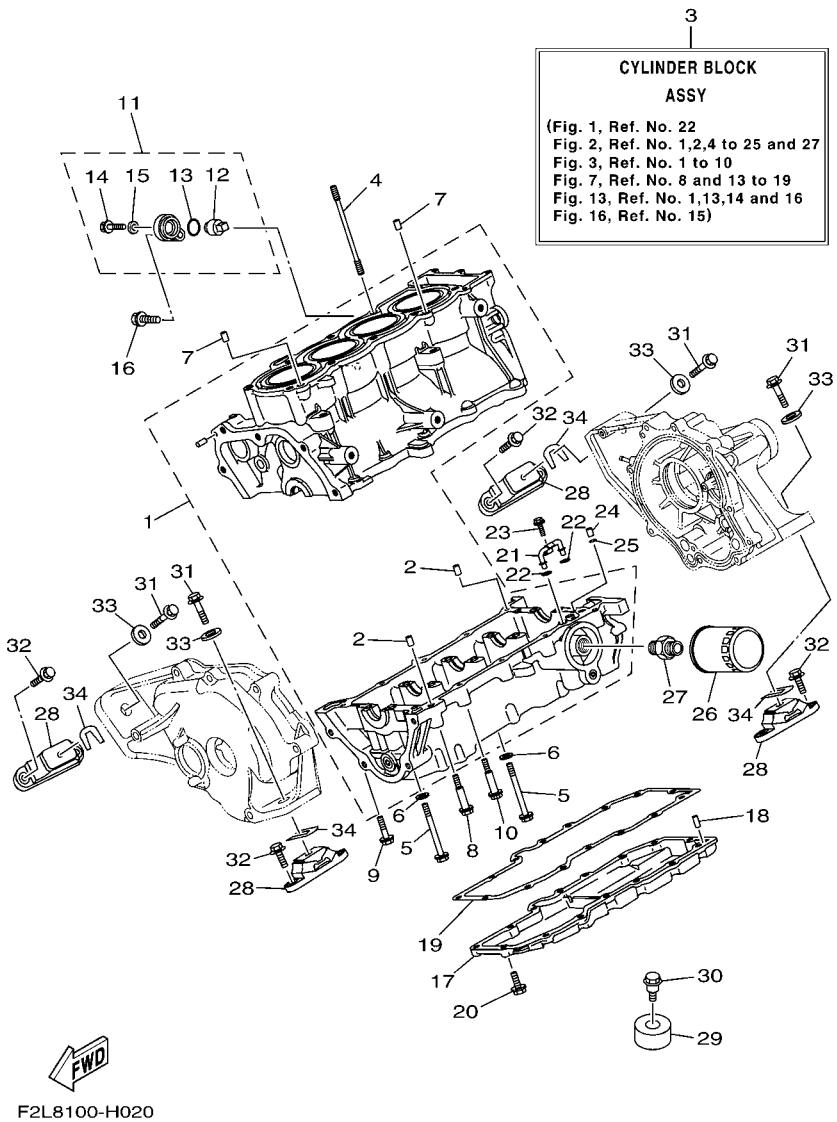

FIG. 2 CRANKCASE

REF. NO.	PART NO.	DESCRIPTION	CAN	EUR	GENE	JPN		REMARKS
1	6D3–15100–00–94	CRANKCASE ASSY	1	1	1	1		
2	99530–10014	.PIN, DOWEL	2	2	2	2		
3	6D3–W009B–10–94	CYLINDER BLOCK ASSY	1	1	1	1		
4	90116–10619	BOLT, STUD	10	10	10	10		
5	90105–093A5	BOLT, FLANGE	10	10	10	10		
6	90201–096J9	WASHER, PLATE	10	10	10	10		
7	99530–10014	PIN, DOWEL	2	2	2	2		
8	90109–06051	BOLT	2	2	2	2		
9	90105–06033	BOLT, FLANGE	1	1	1	1		
10	90105–06M17	BOLT, FLANGE	7	7	7	7		
11	69J–11301–00	ANODE COVER ASSY	1		1	1		EXCEPT EUR
	69J–11301–10	ANODE COVER ASSY		1				FOR EUR
12	67F–11325–01	.ANODE	1		1	1		EXCEPT EUR
	68V–11325–02	.ANODE		1				FOR EUR
13	67F–11328–00	.GROMMET, ANODE	1	1	1	1		
14	90105–06M07	.BOLT, FLANGE	1	1	1	1		
15	90430–06M03	.GASKET	1	1	1	1		
16	97595–08540	BOLT, WITH WASHER	1	1	1	1		
17	6B6–1310A–00–94	PAN, OIL	1	1	1	1		
18	93603–14M15	PIN, DOWEL	2	2	2	2		
19	6B6–13557–01	GASKET	1	1	1	1		
20	97513–06520	BOLT, WITH WASHER	15	15	15	15		
21	60E–13161–00	PIPE, DELIVERY 1	1	1	1	1		
22	93210–06667	O-RING	2	2	2	2		
23	95027–06010	BOLT, FLANGE	1	1	1	1		
24	99530–08012	PIN, DOWEL	1	1	1	1		
25	93210–08001	O-RING	1	1	1	1		

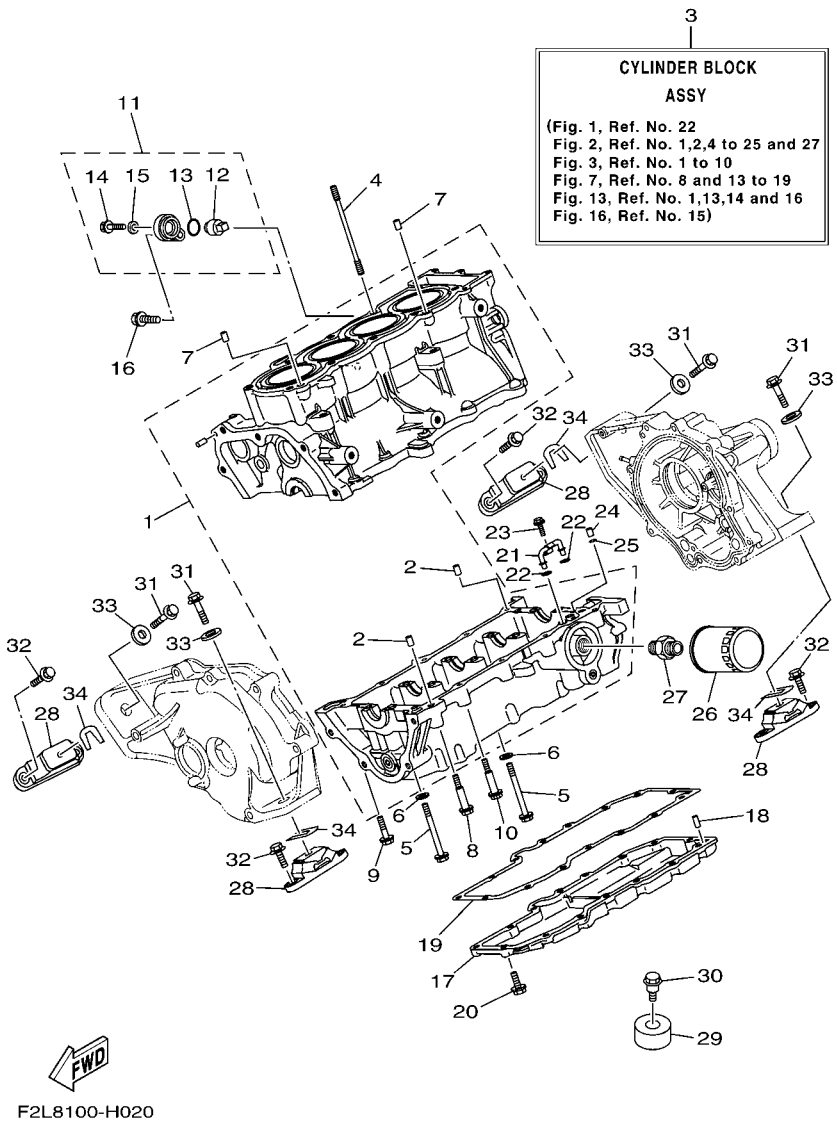

FIG. 2 CRANKCASE

REF. NO.	PART NO.	DESCRIPTION	CAN	EUR	GENE	JPN		REMARKS
26	5GH–13440–20	ELEMENT ASSY, OIL CLEANER	1	1	1	1		
27	90401–20007	BOLT, UNION	1	1	1	1		
28	67X–44517–10–94	MOUNT RUBBER	4	4	4	4		
29	6D3–44574–00	STOPPER, LOWER MOUNT RUBBER	2	2	2	2		
30	90109–06M92	BOLT	2	2	2	2		
31	90119–089UR	BOLT, WITH WASHER	4	4	4	4		
32	90119–08823	BOLT, WITH WASHER	8	8	8	8		
33	90201–099U3	WASHER, PLATE	4	4	4	4		
34	EU0–U7354–00–01	SHIM (T=0.1)	4	4	4	4		UR
	EU0–U7354–00–03	SHIM (T=0.3)	4	4	4	4		UR
	EU0–U7354–00–05	SHIM (T=0.5)	4	4	4	4		UR
	EU0–U7354–00–10	SHIM (T=1.0)	4	4	4	4		UR
	EU0–U7354–00–20	SHIM (T=2.0)	4	4	4	4		UR

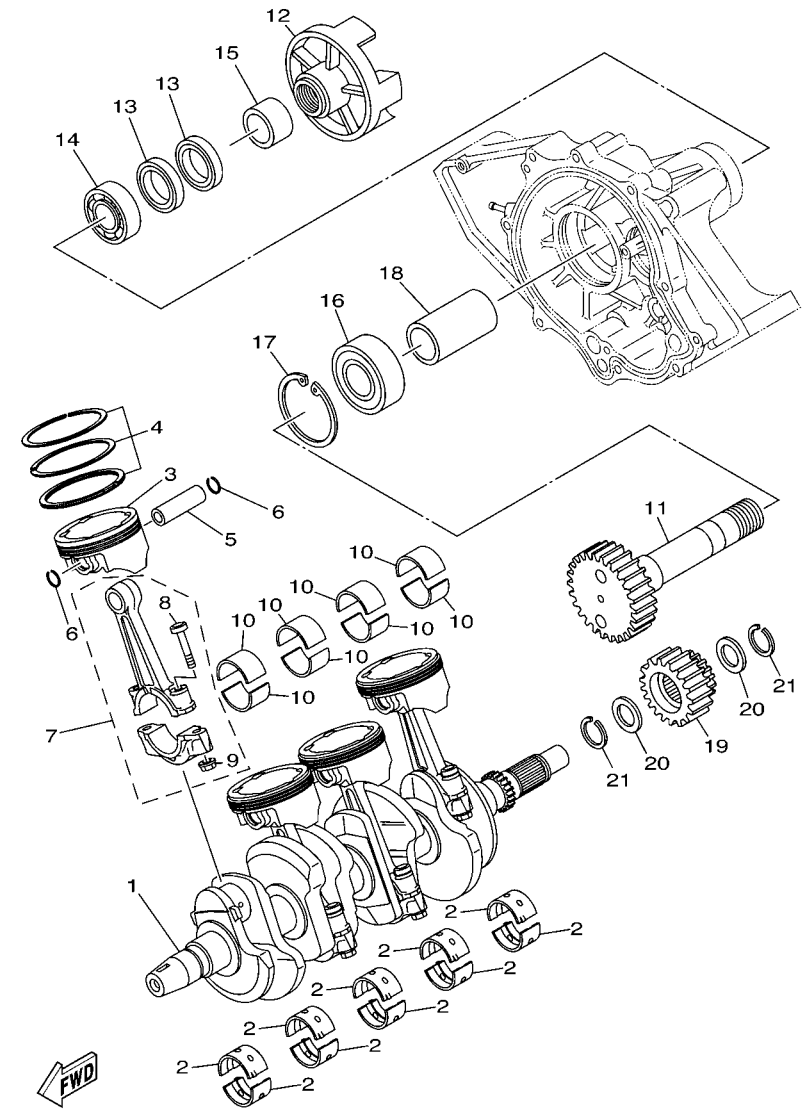

F1K1100-D030

FIG. 3 CRANKSHAFT & PISTON

REF. NO.	PART NO.	DESCRIPTION	CAN	EUR	GENE	JPN		REMARKS
1	60E–11411–11	CRANKSHAFT	1	1	1	1		
2	6D3–11416–A0	PLANE BEARING, CRANKSHAFT 1	10	10	10	10		UR RED
	6D3–11416–00	PLANE BEARING, CRANKSHAFT 1	10	10	10	10		UR BROWN
	6D3–11416–10	PLANE BEARING, CRANKSHAFT 1	10	10	10	10		UR BLACK
	6D3–11416–20	PLANE BEARING, CRANKSHAFT 1	10	10	10	10		UR BLUE
	6D3–11416–30	PLANE BEARING, CRANKSHAFT 1	10	10	10	10		UR GREEN
3	6D3–11631–00–B0	PISTON (STD)	4	4	4	4		
4	6D3–11603–00	PISTON RING SET (STD)	4	4	4	4		
5	4XV–11633–00	PIN, PISTON	4	4	4	4		
6	90468–12069	CLIP	8	8	8	8		
7	6D3–11650–00	CONNECTING ROD ASSY	4	4	4	4		
8	5JW–11654–00	.BOLT, CONNECTING ROD	2	2	2	2		
9	90179–08327	.NUT	2	2	2	2		
10	60E–11656–00	PLANE BEARING, CONNECTING ROD	8	8	8	8		UR BROWN
	60E–11656–10	PLANE BEARING, CONNECTING ROD	8	8	8	8		UR BLACK
	60E–11656–20	PLANE BEARING, CONNECTING ROD	8	8	8	8		UR BLUE
	60E–11656–30	PLANE BEARING, CONNECTING ROD	8	8	8	8		UR GREEN
11	6D3–17572–00	SHAFT, TRANSFER	1	1	1	1		
12	6D3–45813–00–94	FLANGE, COUPLING	1	1	1	1		
13	93101–35004	OIL SEAL	2	2	2	2		
14	93306–07801	BEARING	1	1	1	1		
15	6B6–11478–00	COLLAR	1	1	1	1		
16	93306–30610	BEARING	1	1	1	1		
17	99009–72500	CIRCLIP	1	1	1	1		
18	6B6–17585–00	COLLAR, GEAR	1	1	1	1		
19	6B6–17586–00	GEAR, TRANSFER DRIVE	1	1	1	1		
20	90209–25008	WASHER	2	2	2	2		

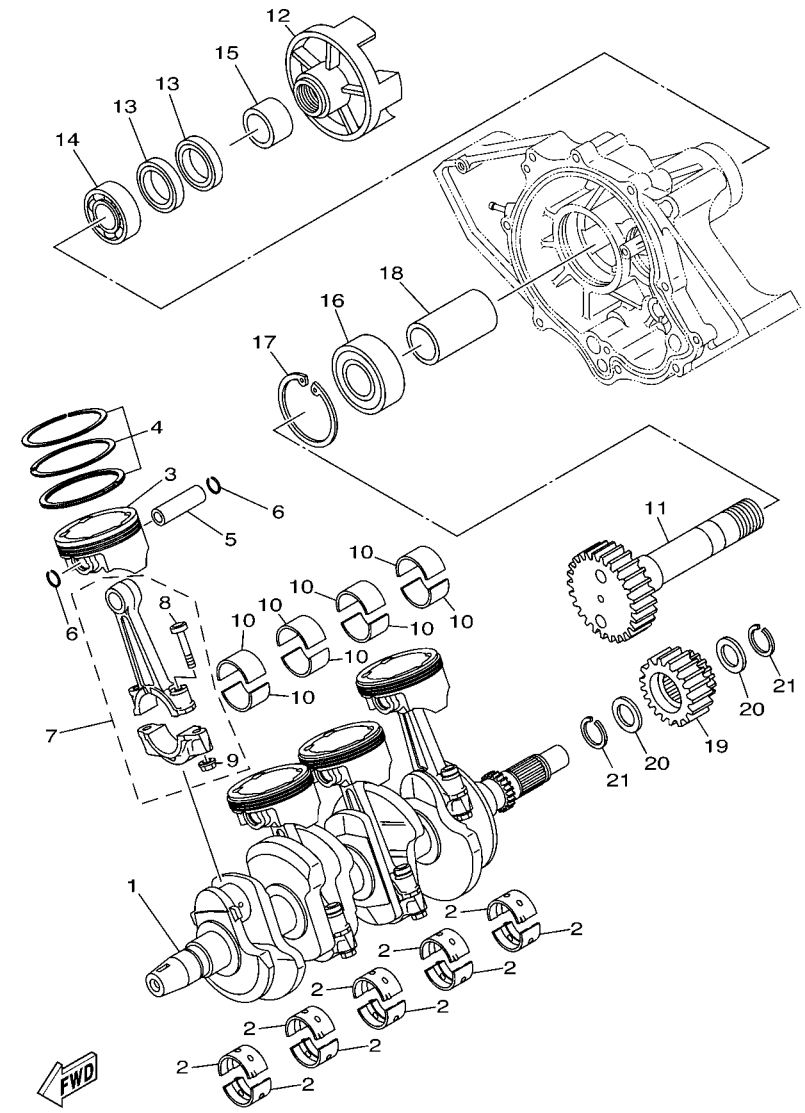

F1K1100-D030

FIG. 3 CRANKSHAFT & PISTON

REF. NO.	PART NO.	DESCRIPTION	CAN	EUR	GENE	JPN		REMARKS
21	93440–28062	CIRCLIP	2	2	2	2		

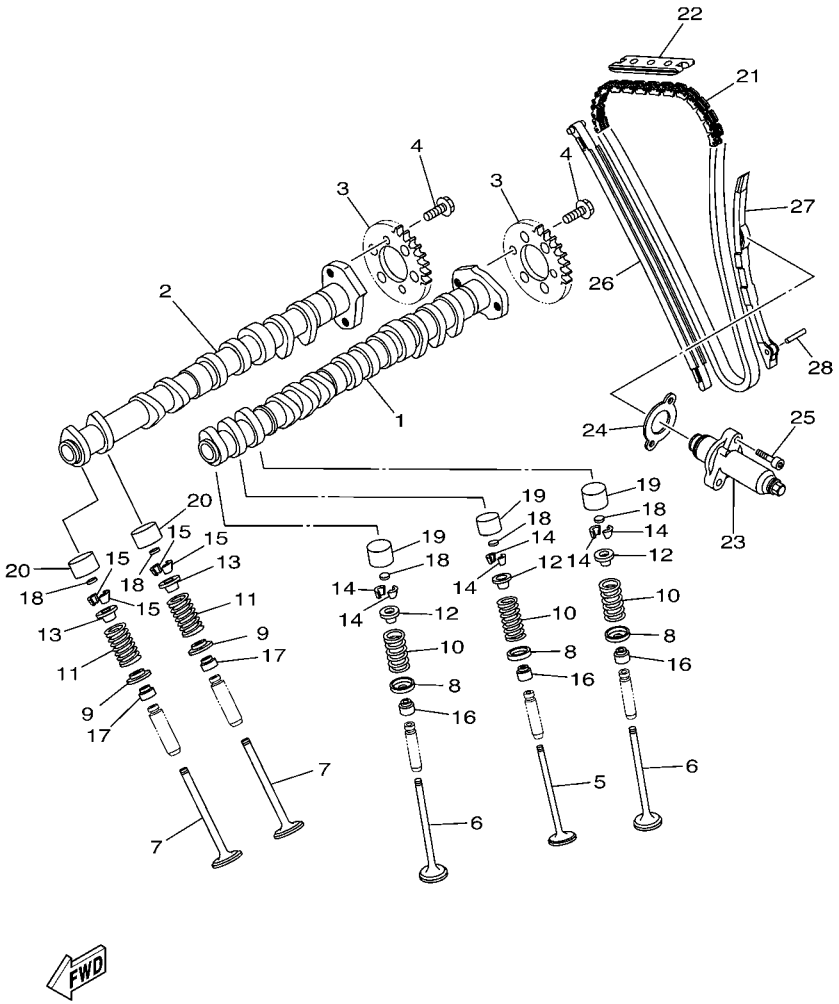

F1K1100-D040

FIG. 4 VALVE

REF. NO.	PART NO.	DESCRIPTION	CAN	EUR	GENE	JPN		REMARKS
1	6D3–12171–11	CAMSHAFT 1	1	1	1	1		
2	6D3–12181–00	CAMSHAFT 2	1	1	1	1		
3	6D3–12176–00	SPROCKET, CAM CHAIN	2	2	2	2		
4	90105–07004	BOLT, FLANGE	4	4	4	4		
5	4XV–12111–00	VALVE, INTAKE	4	4	4	4		
6	4XV–12112–00	VALVE, INTAKE 2	8	8	8	8		
7	5LV–12121–00	VALVE, EXHAUST	8	8	8	8		
8	1HX–12116–01	SEAT, VALVE SPRING	12	12	12	12		
9	3GM–12126–00	SEAT, VALVE SPRING 2	8	8	8	8		
10	4XV–12113–00	SPRING, VALVE INNER	12	12	12	12		
11	4XV–12114–00	SPRING, VALVE OUTER	8	8	8	8		
12	1HX–12117–00	RETAINER, VALVE SPRING	12	12	12	12		
13	1WG–12117–00	RETAINER, VALVE SPRING	8	8	8	8		
14	1HX–12118–00	COTTER, VALVE	24	24	24	24		
15	1WG–12118–00	COTTER, VALVE	16	16	16	16		
16	4TV–12119–00	SEAL, VALVE STEM	12	12	12	12		
17	4SV–12119–00	SEAL, VALVE STEM	8	8	8	8		
18	1HX–12168–00	PAD, ADJUSTING 2 (1.20)	20	20	20	20		UR
	1HX–12168–20	PAD, ADJUSTING 2 (1.25)	20	20	20	20		UR
	1HX–12168–40	PAD, ADJUSTING 2 (1.30)	20	20	20	20		UR
	1HX–12168–60	PAD, ADJUSTING 2 (1.35)	20	20	20	20		UR
	1HX–12168–80	PAD, ADJUSTING 2 (1.40)	20	20	20	20		UR
	1HX–12168–A0	PAD, ADJUSTING 2 (1.45)	20	20	20	20		UR
	1HX–12168–F0	PAD, ADJUSTING 2 (1.50)	20	20	20	20		UR
	1HX–12168–H1	PAD, ADJUSTING 2 (1.55)	20	20	20	20		UR
	1HX–12168–K1	PAD, ADJUSTING 2 (1.60)	20	20	20	20		UR
	1HX–12168–M1	PAD, ADJUSTING 2 (1.65)	20	20	20	20		UR

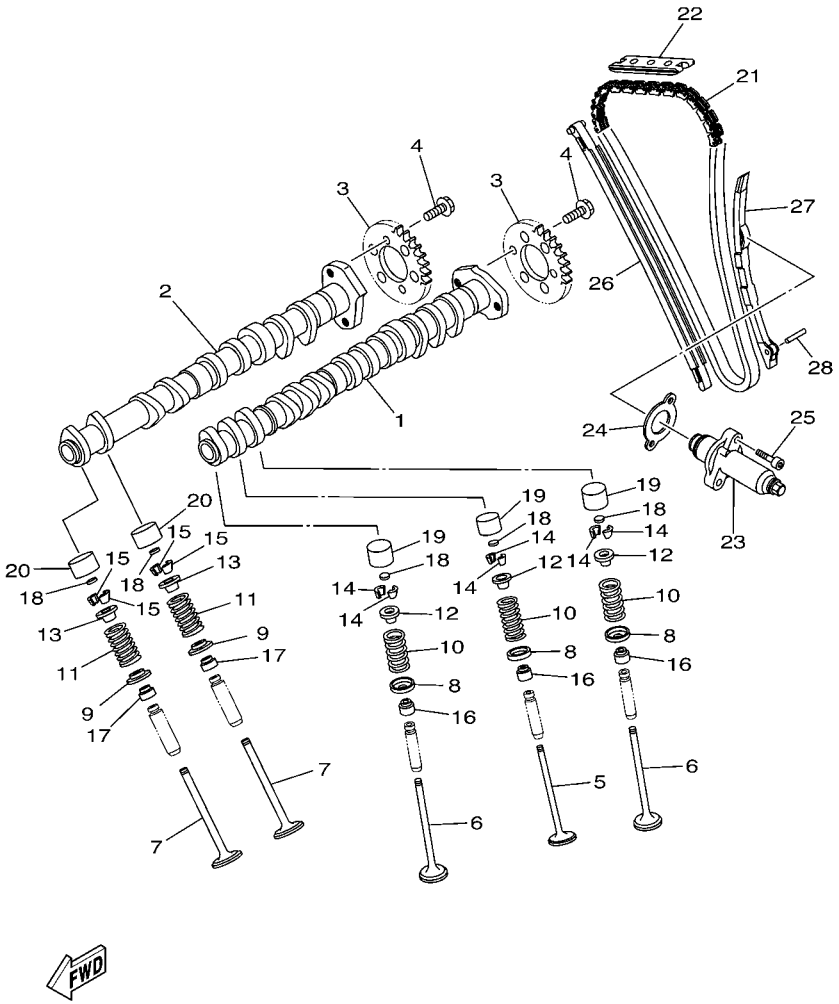

FIG. 4 VALVE

REF. NO.	PART NO.	DESCRIPTION	CAN	EUR	GENE	JPN		REMARKS
18	1HX–12168–R1	PAD, ADJUSTING 2 (1.70)	20	20	20	20		UR
	1HX–12168–U1	PAD, ADJUSTING 2 (1.75)	20	20	20	20		UR
	1HX–12168–W1	PAD, ADJUSTING 2 (1.80)	20	20	20	20		UR
	1HX–12168–Y1	PAD, ADJUSTING 2 (1.85)	20	20	20	20		UR
	1HX–12169–11	PAD, ADJUSTING 2 (1.90)	20	20	20	20		UR
	1HX–12169–31	PAD, ADJUSTING 2 (1.95)	20	20	20	20		UR
	1HX–12169–50	PAD, ADJUSTING 2 (2.00)	20	20	20	20		UR
	1HX–12169–70	PAD, ADJUSTING 2 (2.05)	20	20	20	20		UR
	1HX–12169–90	PAD, ADJUSTING 2 (2.10)	20	20	20	20		UR
	1HX–12169–E0	PAD, ADJUSTING 2 (2.15)	20	20	20	20		UR
	1HX–12169–G0	PAD, ADJUSTING 2 (2.20)	20	20	20	20		UR
	1HX–12169–J0	PAD, ADJUSTING 2 (2.25)	20	20	20	20		UR
	1HX–12169–L0	PAD, ADJUSTING 2 (2.30)	20	20	20	20		UR
	1HX–12169–N0	PAD, ADJUSTING 2 (2.35)	20	20	20	20		UR
	1HX–12169–T0	PAD, ADJUSTING 2 (2.40)	20	20	20	20		UR
19	3LN–12153–10	LIFTER, VALVE	12	12	12	12		YELLOW
20	3FV–12153–10	LIFTER, VALVE	8	8	8	8		YELLOW
21	94591–49130	CHAIN	1	1	1	1		
22	5BE–12241–00	GUIDE, STOPPER 2	1	1	1	1		
23	6D3–12210–00	TENSIONER ASSY, CAM CHAIN	1	1	1	1		
24	4FM–12213–00	GASKET, TENSIONER CASE	1	1	1	1		
25	91380–06025	BOLT	2	2	2	2		
26	6D3–12251–00	DAMPER, CHAIN 1	1	1	1	1		
27	4XV–12252–00	DAMPER, CHAIN 2	1	1	1	1		
28	93607–54002	PIN, DOWEL	1	1	1	1		

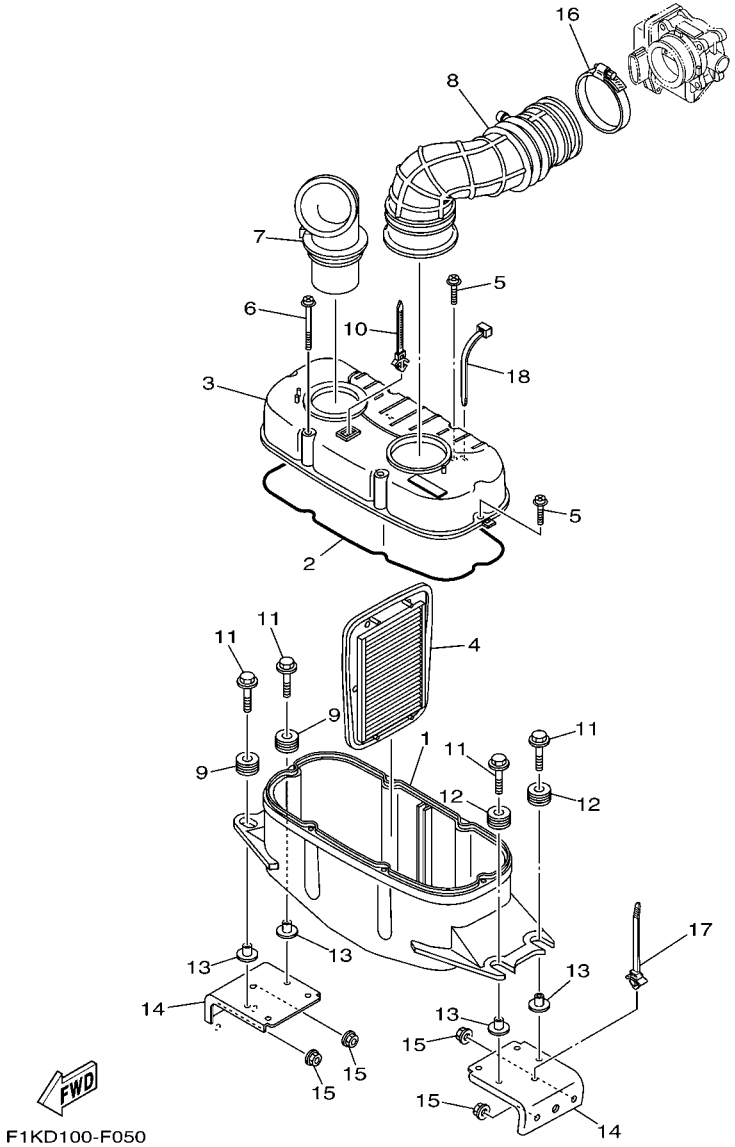

F1KD100-F050

FIG. 5 INTAKE

REF. NO.	PART NO.	DESCRIPTION	CAN	EUR	GENE	JPN		REMARKS
1	6D3–14411–00	CASE, AIR CLEANER 1	1	1	1	1		
2	4XV–14452–00	SEAL	1	1	1	1		
3	6D3–14421–02	CASE, AIR CLEANER 2	1	1	1	1		
4	6D3–14451–00	ELEMENT, AIR CLEANER	1	1	1	1		
5	90159–05013	SCREW, WITH WASHER	4	4	4	4		
6	90159–05014	SCREW, WITH WASHER	2	2	2	2		
7	6D3–14437–00	DUCT	1	1	1	1		
8	6D3–14419–01	PIPE	1	1	1	1		
9	90480–22M15	GROMMET	2	2	2	2		
10	90464–12089	CLAMP	1	1	1	1		
11	90119–08M22	BOLT, WITH WASHER	4	4	4	4		
12	90480–22M15	GROMMET	2	2	2	2		
13	6D3–14495–00	COLLAR	4	4	4	4		
14	F1K–U8572–02	BRACKET 2	2	2	2	2		
15	9572R–08300	NUT, FLANGE	4	4	4	4		
16	90601–175UR	BAND, HOSE 75	1	1	1	1		
17	90464–38800	CLAMP	1	1	1	1		
18	90464–40825	CLAMP	2	2	2	2		

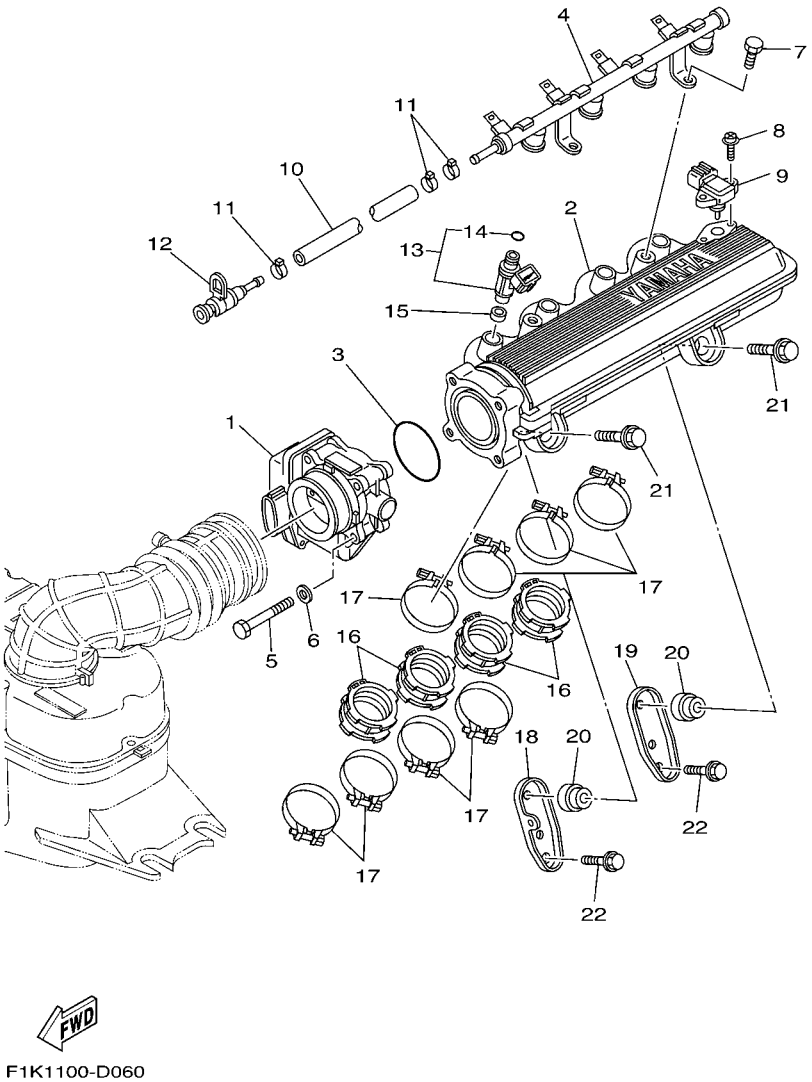

FIG. 6 INTAKE 2

REF. NO.	PART NO.	DESCRIPTION	CAN	EUR	GENE	JPN		REMARKS
1	6D3–13750–00	THROTTLE BODY ASSY	1	1	1	1		
2	6D3–13641–00	MANIFOLD 1	1	1	1	1		
3	6D3–14457–00	SEAL	1	1	1	1		
4	6D3–12880–00	DELIVERY PIPE	1	1	1	1		
5	68V–13573–00	BOLT 1	4	4	4	4		
6	68V–14475–00	WASHER	4	4	4	4		
7	63P–14446–00	BOLT	2	2	2	2		
8	6D3–81147–00	SCREW 3	2	2	2	2		
9	68F–83688–00	SENSOR ASSY	1	1	1	1		
10	6D3–14294–00	HOSE (L600)	1	1	1	1		
11	90450–17M17	HOSE CLAMP ASSY	3	3	3	3		
12	60E–24300–01	FUEL PIPE JOINT	1	1	1	1		
13	60E–13761–10	INJECTOR	4	4	4	4		
14	60E–14147–00	.O-RING	1	1	1	1		
15	90430–09002	GASKET	4	4	4	4		
16	6D3–13795–01	JOINT, THROTTLE BODY 1	4	4	4	4		
17	90450–57006	HOSE CLAMP ASSY	8	8	8	8		
18	6D3–14413–00	STAY	1	1	1	1		
19	6D3–14414–00	STAY 2	1	1	1	1		
20	60E–14449–00–94	COLLAR	2	2	2	2		
21	90119–08050	BOLT, WITH WASHER	2	2	2	2		
22	90119–08074	BOLT, WITH WASHER	2	2	2	2		

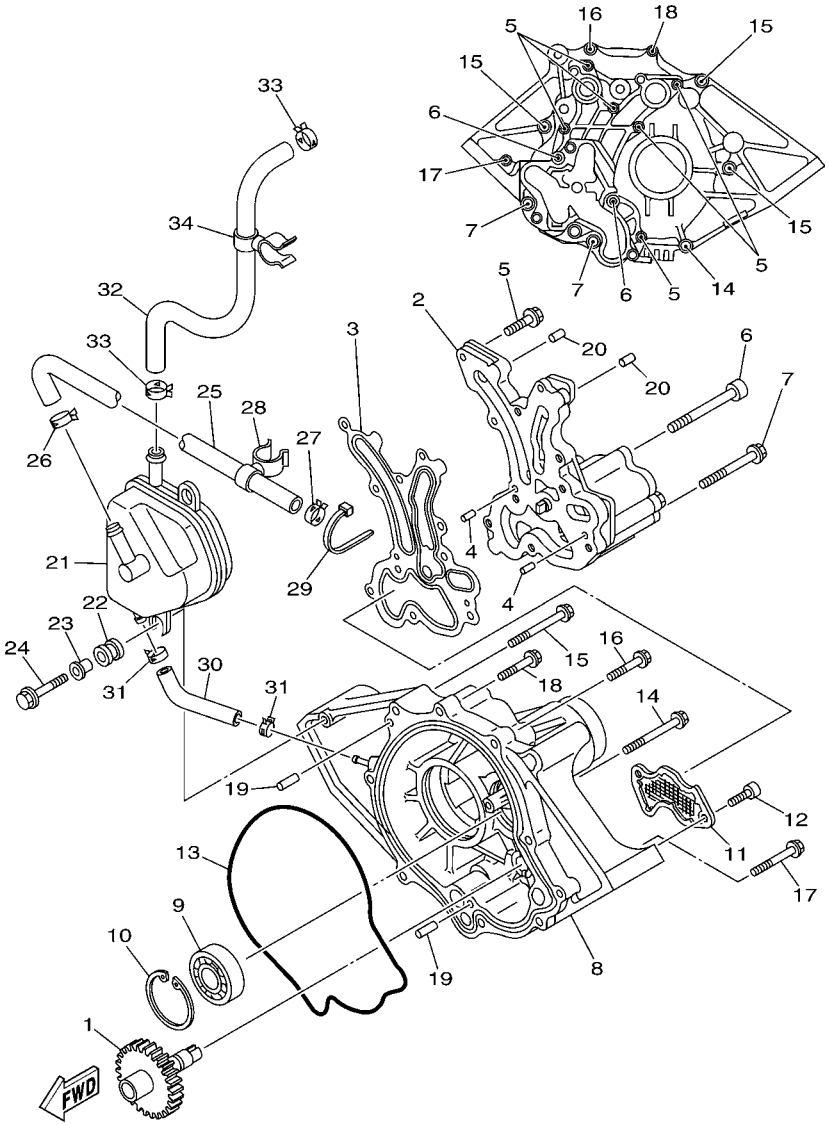

F2L1100-H070

FIG. 7 OIL PUMP

REF. NO.	PART NO.	DESCRIPTION	CAN	EUR	GENE	JPN		REMARKS
1	6B6–13360–00	DRIVEN GEAR ASSY	1	1	1	1		
2	6D3–13300–10	OIL PUMP ASSY	1	1	1	1		
3	6B6–13563–01	GASKET	1	1	1	1		
4	93603–12221	PIN, DOWEL	2	2	2	2		
5	97513–06525	BOLT, WITH WASHER	6	6	6	6		
6	90110–08041	BOLT, HEXAGON SOCKET HEAD	2	2	2	2		
7	90119–08085	BOLT, WITH WASHER	2	2	2	2		
8	6B6–13327–01–94	COVER, PUMP GEAR	1	1	1	1		
9	93306–30441	BEARING	1	1	1	1		
10	99009–52500	CIRCLIP	1	1	1	1		
11	6B6–13411–00	STRAINER, OIL	1	1	1	1		
12	91317–06016	BOLT	2	2	2	2		
13	6B6–13475–01	GASKET	1	1	1	1		
14	90119–08045	BOLT, WITH WASHER	1	1	1	1		
15	90119–08034	BOLT, WITH WASHER	3	3	3	3		
16	90119–08043	BOLT, WITH WASHER	1	1	1	1		
17	97513–06555	BOLT, WITH WASHER	1	1	1	1		
18	97513–06535	BOLT, WITH WASHER	1	1	1	1		
19	93608–16M16	PIN, DOWEL	2	2	2	2		
20	93606–25M00	PIN, DOWEL	2	2	2	2		
21	6D3–11164–00	SEPERATOR, OIL	1	1	1	1		
22	6A0–82317–00	DAMPER, IGNITION COIL	2	2	2	2		
23	90387–06119	COLLAR	2	2	2	2		
24	90119–06M65	BOLT, WITH WASHER	2	2	2	2		
25	6D3–11126–00	PIPE, BREATHER 3	1	1	1	1		
26	90467–170A0	CLIP	1	1	1	1		
27	90467–170A0	CLIP	1	1	1	1		

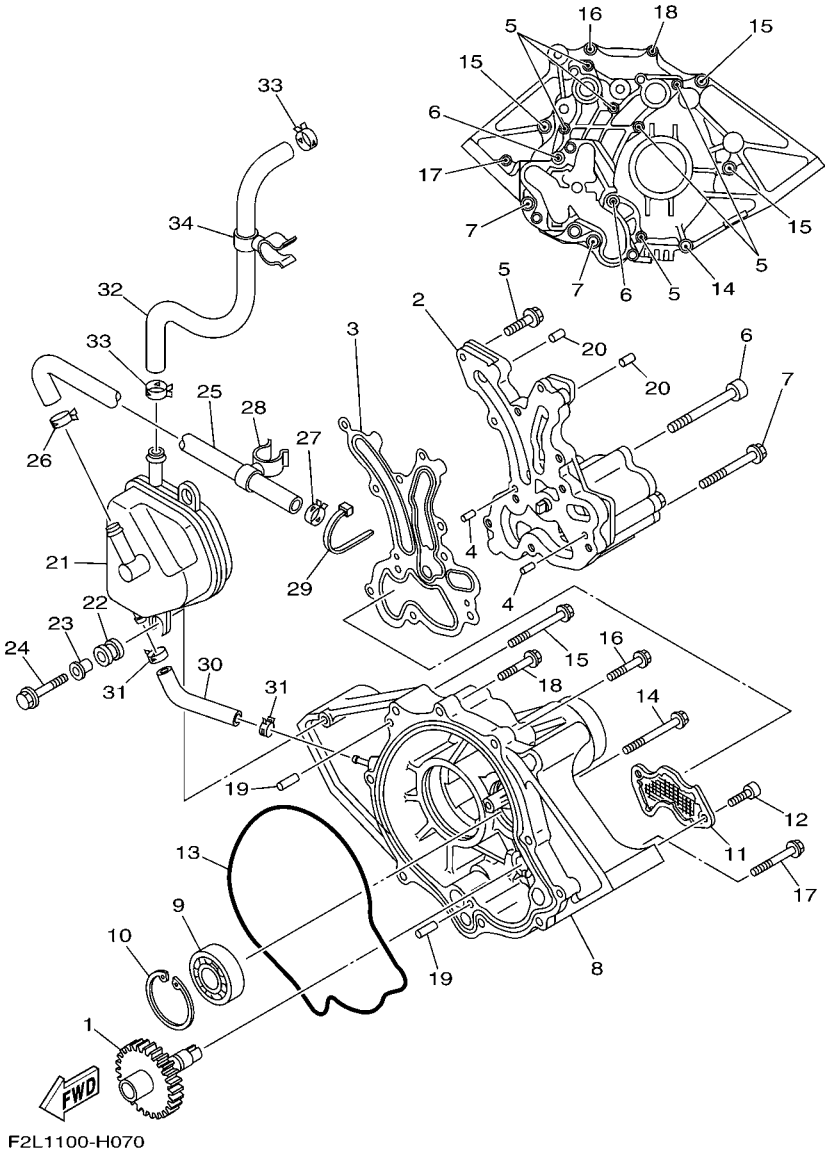

FIG. 7 OIL PUMP

REF. NO.	PART NO.	DESCRIPTION	CAN	EUR	GENE	JPN		REMARKS
28	90464–21001	CLAMP	1	1	1	1		
29	90464–18006	CLAMP	1	1	1	1		
30	6D3–11125–00	PIPE, BREATHER 4	1	1	1	1		
31	90467–110A1	CLIP	2	2	2	2		
32	6D3–11166–00	PIPE, BREATHER 1	1	1	1	1		
33	90467–170A0	CLIP	2	2	2	2		
34	90464–21001	CLAMP	1	1	1	1		

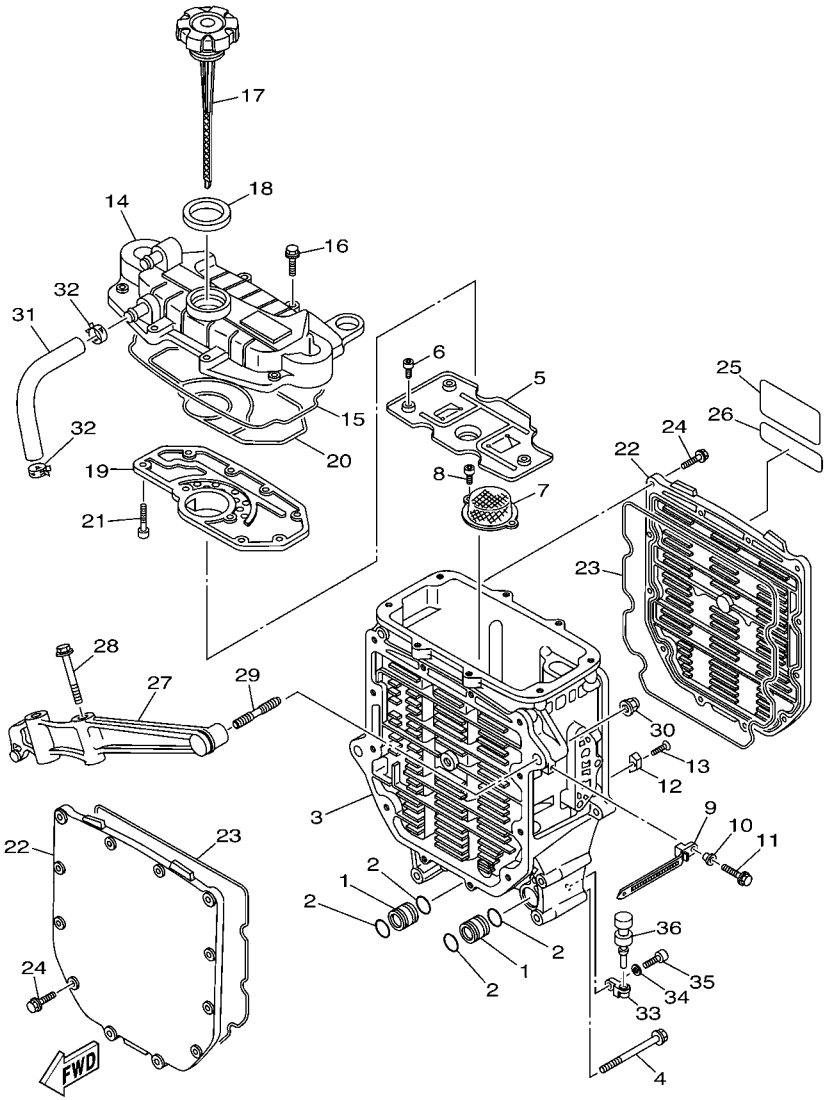

F1K1100-D080

FIG. 8 OIL COOLER

REF. NO.	PART NO.	DESCRIPTION	CAN	EUR	GENE	JPN		REMARKS
1	60E–13446–00	CONNECTOR	2	2	2	2		
2	93210–18322	O-RING	4	4	4	4		
3	6D3–13462–00–94	CASE, OIL COOLER	1	1	1	1		
4	90119–10020	BOLT, WITH WASHER	5	5	5	5		
5	6B6–13317–00	PLATE, BAFFLE	1	1	1	1		
6	91317–05014	BOLT	3	3	3	3		
7	60E–13421–00	STRAINER 2	1	1	1	1		
8	91317–06014	BOLT	2	2	2	2		
9	90465–12M53	CLAMP	1	1	1	1		
10	90387–06M05	COLLAR	1	1	1	1		
11	97595–06520	BOLT, WITH WASHER	1	1	1	1		
12	6E5–11325–00	ANODE	1	1	1	1		
13	98780–04015	SCREW, FLAT HEAD	1	1	1	1		
14	6D3–13463–00–94	COVER, OIL COOLER	1	1	1	1		
15	60E–13475–00	GASKET	1	1	1	1		
16	90105–06036	BOLT, FLANGE	8	8	8	8		
17	60E–15362–00	PLUG, OIL LEVEL	1	1	1	1		
18	60E–13473–00	O-RING	1	1	1	1		
19	6D3–11165–00	PLATE, BREATHER	1	1	1	1		
20	6D3–13477–00	GASKET	1	1	1	1		
21	91317–05016	BOLT	9	9	9	9		
22	6D3–13443–00–94	COVER, OIL COOLER	2	2	2	2		
23	60E–13476–10	GASKET	2	2	2	2		
24	90105–06M07	BOLT, FLANGE	24	24	24	24		
25	6B6–83623–00	MARK 3	1	1	1	1		
26	60E–83627–00	LABEL, CAUTION 7	1	1	1	1		
27	6B6–13151–00–94	STAY	1	1	1	1		

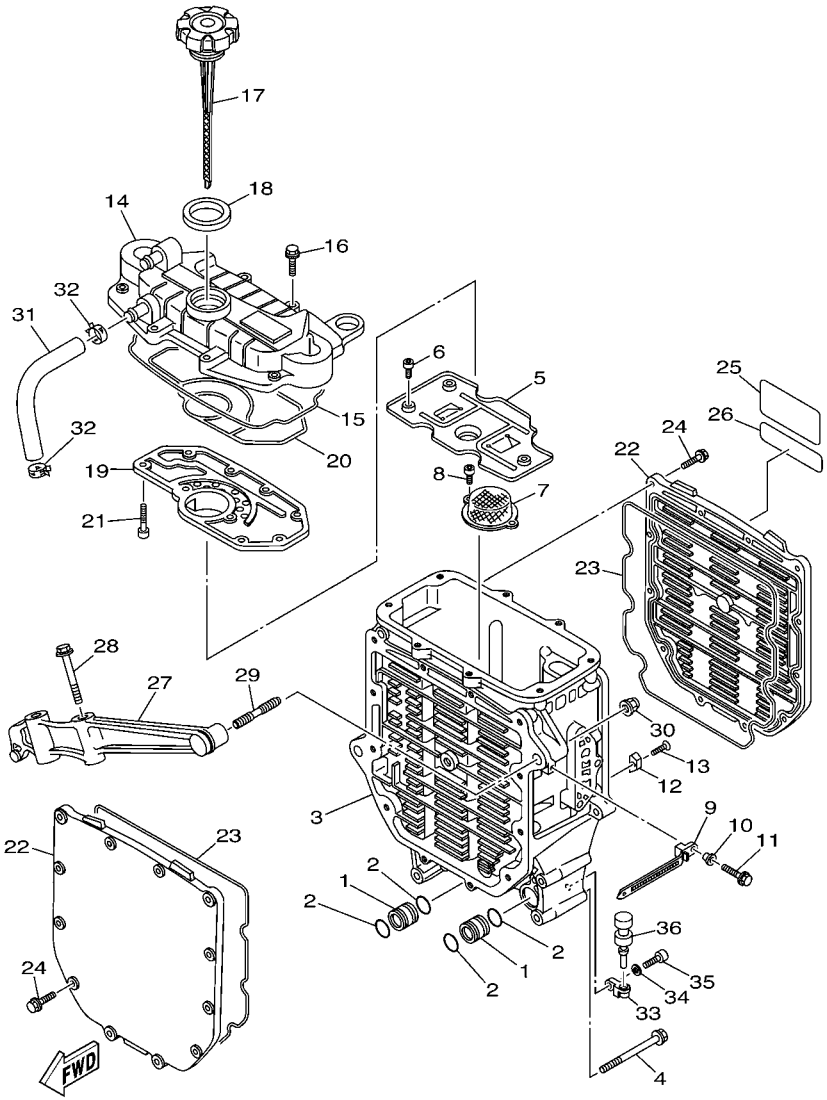

FIG. 8 OIL COOLER

REF. NO.	PART NO.	DESCRIPTION	CAN	EUR	GENE	JPN		REMARKS
28	90119–10M02	BOLT, WITH WASHER	2	2	2	2		
29	90116–10016	BOLT, STUD	2	2	2	2		
30	90176–10001	NUT, CROWN	2	2	2	2		
31	6D3–11167–00	PIPE, BREATHER 2	1	1	1	1		
32	90467–170A0	CLIP	2	2	2	2		
33	60E–51341–00–94	BRACKET 1	2	2	2	2		
34	92995–06600	WASHER	2	2	2	2		
35	91380–06020	BOLT	2	2	2	2		
36	90480–06M46	GROMMET	2	2	2	2		

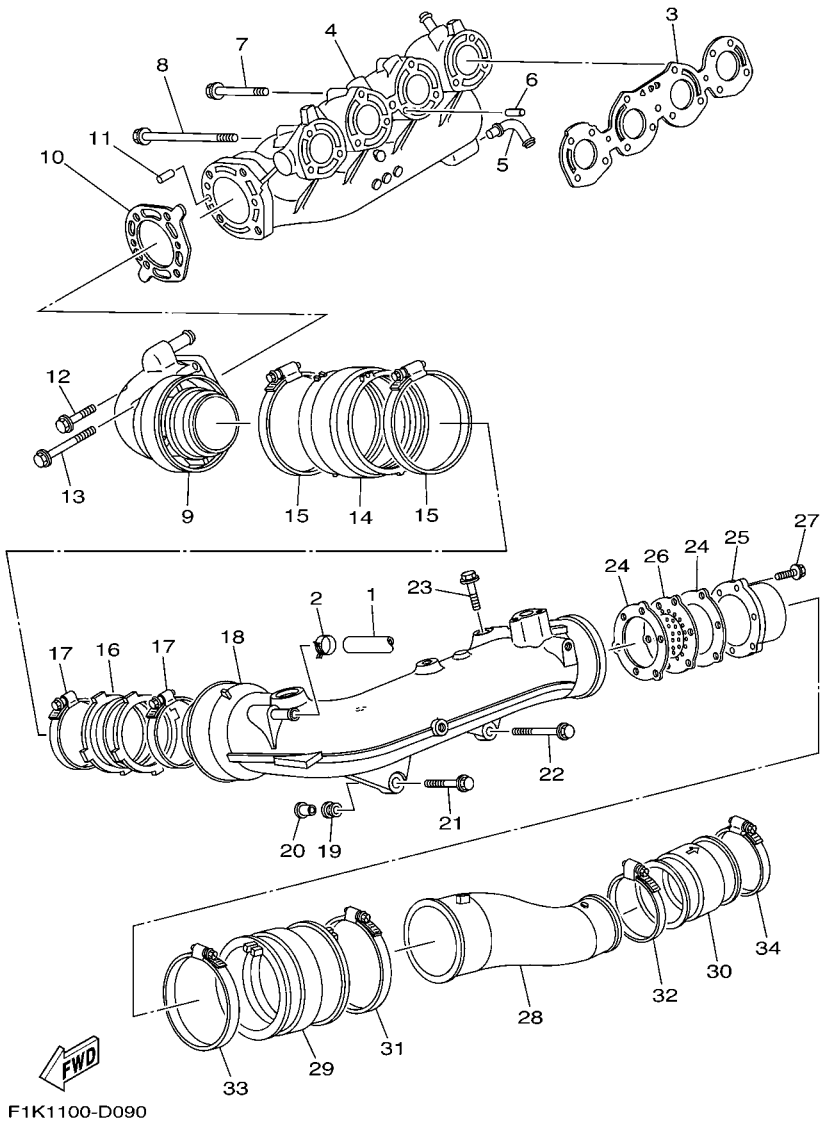

FIG. 9 EXHAUST 1

REF. NO.	PART NO.	DESCRIPTION	CAN	EUR	GENE	JPN		REMARKS
1	90445–16005	HOSE (L870)	1	1	1	1		
2	90467–160A0	CLIP	1	1	1	1		
3	6D3–14613–00	GASKET, EXHAUST PIPE	1	1	1	1		
4	6D3–14711–00–94	MUFFLER 1	1	1	1	1		
5	60E–11372–10	NIPPLE, HOSE	1	1	1	1		
6	93608–16M16	PIN, DOWEL	2	2	2	2		
7	90119–08036	BOLT, WITH WASHER	5	5	5	5		
8	90119–08075	BOLT, WITH WASHER	6	6	6	6		
9	6D3–14712–00–94	RING, JOINT	1	1	1	1		
10	6D3–14739–00	GASKET, MUFFLER DAMPER 1	1	1	1	1		
11	93606–12019	PIN, DOWEL	2	2	2	2		
12	90119–08036	BOLT, WITH WASHER	2	2	2	2		
13	90119–08031	BOLT, WITH WASHER	2	2	2	2		
14	6D3–14615–00	JOINT, EXHAUST 1	1	1	1	1		
15	90450–99005	HOSE CLAMP ASSY	2	2	2	2		
16	6D3–14625–00	JOINT, EXHAUST 2	1	1	1	1		
17	90450–90001	HOSE CLAMP ASSY	2	2	2	2		
18	6D3–14721–00–94	MUFFLER 2	1	1	1	1		
19	90480–21M63	GROMMET	1	1	1	1		
20	90387–11002	COLLAR	1	1	1	1		
21	90119–10011	BOLT, WITH WASHER	1	1	1	1		
22	90119–10017	BOLT, WITH WASHER	1	1	1	1		
23	90119–10013	BOLT, WITH WASHER	2	2	2	2		
24	60E–14623–00	GASKET, EXHAUST PIPE	2	2	2	2		
25	60E–14784–00–94	PIPE, TAIL	1	1	1	1		
26	6D3–1469W–00	PLATE, SILENCER 6	1	1	1	1		
27	90105–06790	BOLT, FLANGE	3	3	3	3		

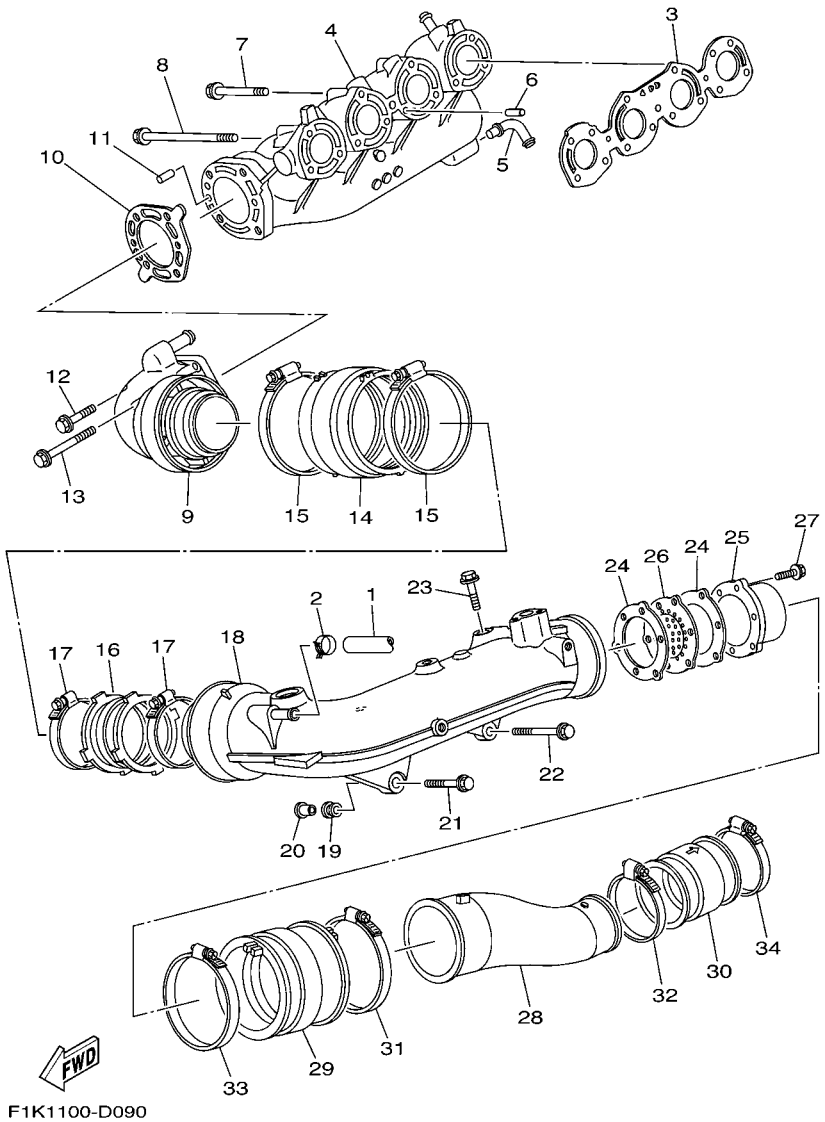

FIG. 9 EXHAUST 1

REF. NO.	PART NO.	DESCRIPTION	CAN	EUR	GENE	JPN		REMARKS
28	6D3–14752–00–94	PIPE, OUTLET	1	1	1	1		
29	6B6–1475E–00	PIPE 2	1	1	1	1		
30	6D3–1475F–00	PIPE 3	1	1	1	1		
31	90450–99004	HOSE CLAMP ASSY	1	1	1	1		
32	90450–94001	HOSE CLAMP ASSY	1	1	1	1		
33	90450–99004	HOSE CLAMP ASSY	1	1	1	1		
34	90450–94001	HOSE CLAMP ASSY	1	1	1	1		

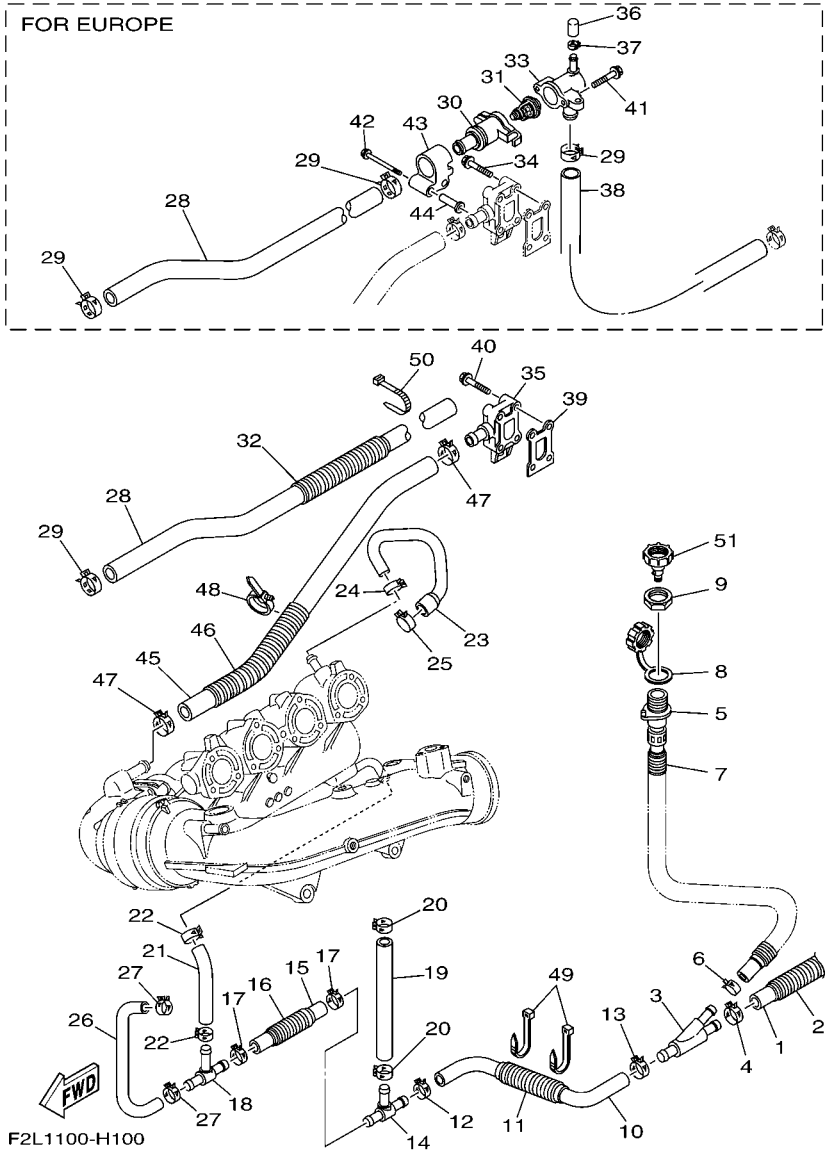

FIG. 10 EXHAUST 2

REF. NO.	PART NO.	DESCRIPTION	CAN	EUR	GENE	JPN		REMARKS
1	90445–21805	HOSE (L300)	1	1	1	1		
2	90447–22004	HOSE, WITH SPRING (L200)	1	1	1	1		
3	60E–12581–00	JOINT, HOSE 1	1	1	1	1		
4	90467–200A0	CLIP	1	1	1	1		
5	63M–12580–00	JOINT ASSY	1	1	1	1		
6	90467–150A0	CLIP	1	1	1	1		
7	90446–24M79	HOSE (L230)	1	1	1	1		
8	682–84385–01	CAP,1	1	1	1	1		
9	EU0–61652–00	NUT	1	1	1	1		
10	6D3–1243A–10	HOSE 1	1	1	1	1		
11	90447–22004	HOSE, WITH SPRING (L200)	1	1	1	1		
12	90467–200A0	CLIP	1	1	1	1		
13	90467–200A0	CLIP	1	1	1	1		
14	60E–12584–00	JOINT, HOSE 3	1	1	1	1		
15	6D3–1243E–10	HOSE 2	1	1	1	1		
16	90447–22001	HOSE, WITH SPRING (L100)	1	1	1	1		
17	90467–200A0	CLIP	2	2	2	2		
18	6D3–12584–00	JOINT, HOSE 3	1	1	1	1		
19	6D3–1244H–10	HOSE 5	1	1	1	1		
20	90467–160A0	CLIP	2	2	2	2		
21	90445–18M03	HOSE (L108)	1	1	1	1		
22	90467–160A0	CLIP	2	2	2	2		
23	6D3–12577–10	HOSE 2	1	1	1	1		
24	90467–170A0	CLIP	1	1	1	1		
25	90467–200A0	CLIP	1	1	1	1		
26	6D3–1244G–10	HOSE, 4	1	1	1	1		
27	90467–160A0	CLIP	2	2	2	2		

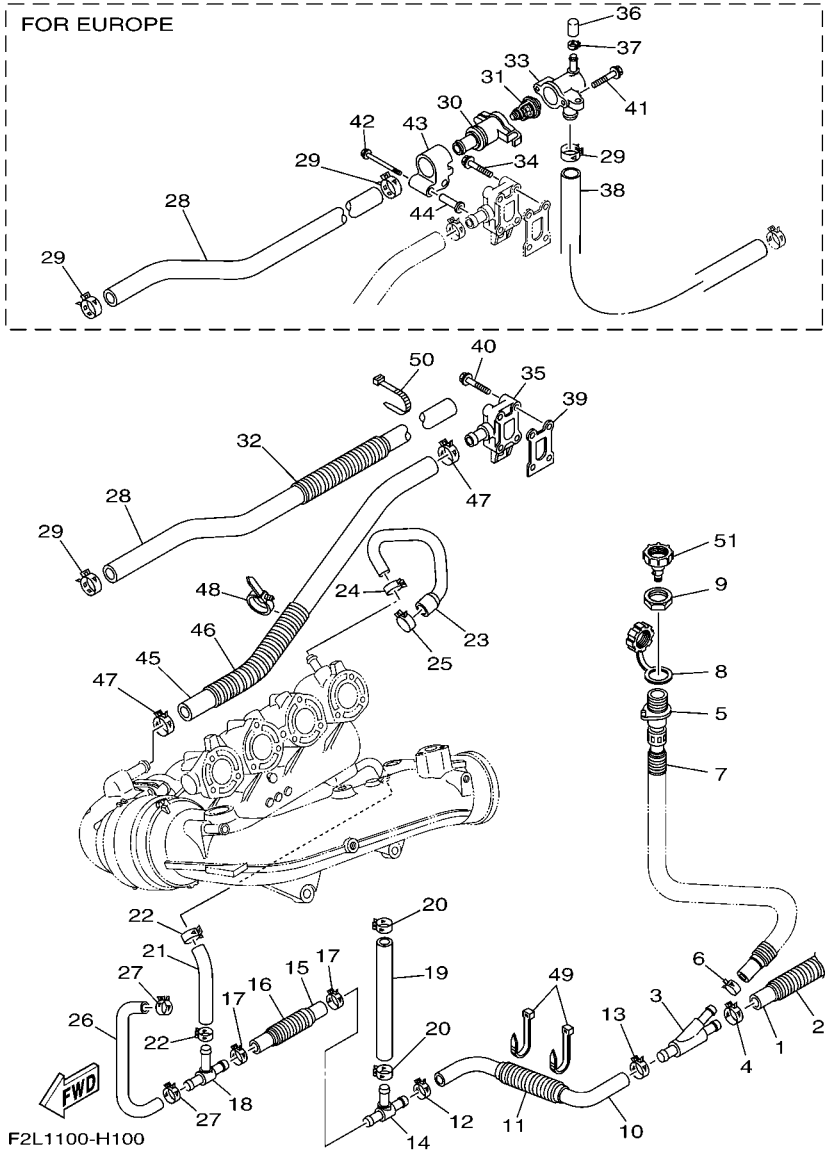

FIG. 10 EXHAUST 2

REF. NO.	PART NO.	DESCRIPTION	CAN	EUR	GENE	JPN		REMARKS
28	90445–22003	HOSE (L1010)	1		1	1		EXCEPT EUR
	90445–26004	HOSE (L375)		1				FOR EUR
29	90467–210A0	CLIP	1		1	1		EXCEPT EUR
	90467–240A0	CLIP		3				FOR EUR
30	60E–12417–10–94	HOUSING, THERMOSTAT		1				FOR EUR
31	6D3–12411–00	THERMOSTAT		1				FOR EUR
32	90447–22005	HOSE, WITH SPRING (L200)	1		1	1		EXCEPT EUR
33	60E–12413–10–94	COVER, THERMOSTAT		1				FOR EUR
34	90105–06035	BOLT, FLANGE		2				FOR EUR
35	6D3–12446–00	JOINT	1	1	1	1		
36	6D3–12494–00	SEAL, PIPE 1		1				FOR EUR
37	90467–120A0	CLIP		1				FOR EUR
38	90445–25004	HOSE (L670)		1				FOR EUR
39	60E–12435–00	GASKET	1	1	1	1		
40	90105–06035	BOLT, FLANGE	4		4	4		EXCEPT EUR
41	90105–06054	BOLT, FLANGE		2				FOR EUR
42	90105–06035	BOLT, FLANGE		2				FOR EUR
43	6B6–12499–00	JOINT		1				FOR EUR
44	90387–06083	COLLAR		2				FOR EUR
45	90445–21004	HOSE (L530)	1	1	1	1		
46	90447–22005	HOSE, WITH SPRING (L200)	1	1	1	1		
47	90467–200A0	CLIP	2	2	2	2		
48	90464–31001	CLAMP	1	1	1	1		
49	90464–35132	CLAMP	2	2	2	2		
50	90464–35132	CLAMP	1		1	1		EXCEPT EUR
51	67X–E2590–10	CONDUCTION ASSY	1	1	1	1		

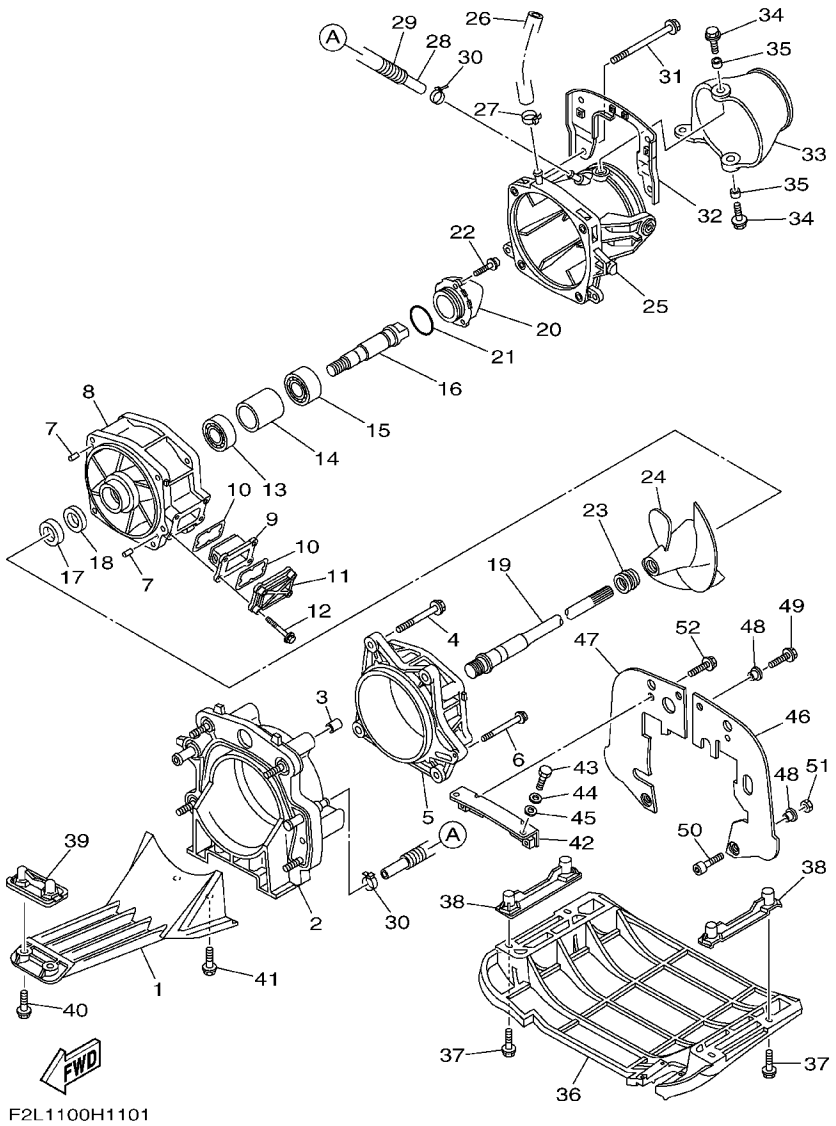

FIG. 11 JET UNIT 1

REF. NO.	PART NO.	DESCRIPTION	CAN	EUR	GENE	JPN		REMARKS
1	6D3–R1333–00–94	SCREEN, INTAKE	1	1	1	1		
2	6D3–G5831–00	PLATE, TRANSOM	1	1	1	1		
3	99590–14016	PIN, DOWEL	2	2	2	2		
4	90119–10836	BOLT, WITH WASHER	4	4	4	4		
5	66V–51312–01–94	HOUSING, IMPELLER	1	1	1	1		
6	90119–06835	BOLT, WITH WASHER	1	1	1	1		
7	93606–12019	PIN, DOWEL	2	2	2	2		
8	6B6–51315–01–94	DUCT, IMPELLER	1	1	1	1		
9	66V–46882–00	FILTER	1	1	1	1		
10	66V–42414–00	O-RING	2	2	2	2		
11	66V–45214–00–94	COVER, WATER INLET 1	1	1	1	1		
12	90119–06800	BOLT, WITH WASHER	4	4	4	4		
13	93306–27211	BEARING	1	1	1	1		
14	65V–45538–00	SPACER 1	1	1	1	1		
15	93306–205U0	BEARING	1	1	1	1		
16	6D3–45514–00	SHAFT, DRIVE 4	1	1	1	1		
17	93101–21001	OIL SEAL	1	1	1	1		
18	93101–21002	OIL SEAL	1	1	1	1		
19	6D3–45511–00	SHAFT, DRIVE	1	1	1	1		
20	6B6–51326–10	CAP	1	1	1	1		
21	93210–464A3	O-RING	1	1	1	1		
22	90110–06822	BOLT, HEXAGON SOCKET HEAD	3	3	3	3		
23	6D3–R1319–00	CAP, IMPELLER	1	1	1	1		
24	6D3–R1321–02	IMPELLER	1	1	1	1		
25	6D3–R1318–00	NOZZLE	1	1	1	1		
26	90445–16006	HOSE (L260)	1	1	1	1		
27	90601–118UF	BAND, HOSE 18	1	1	1	1		

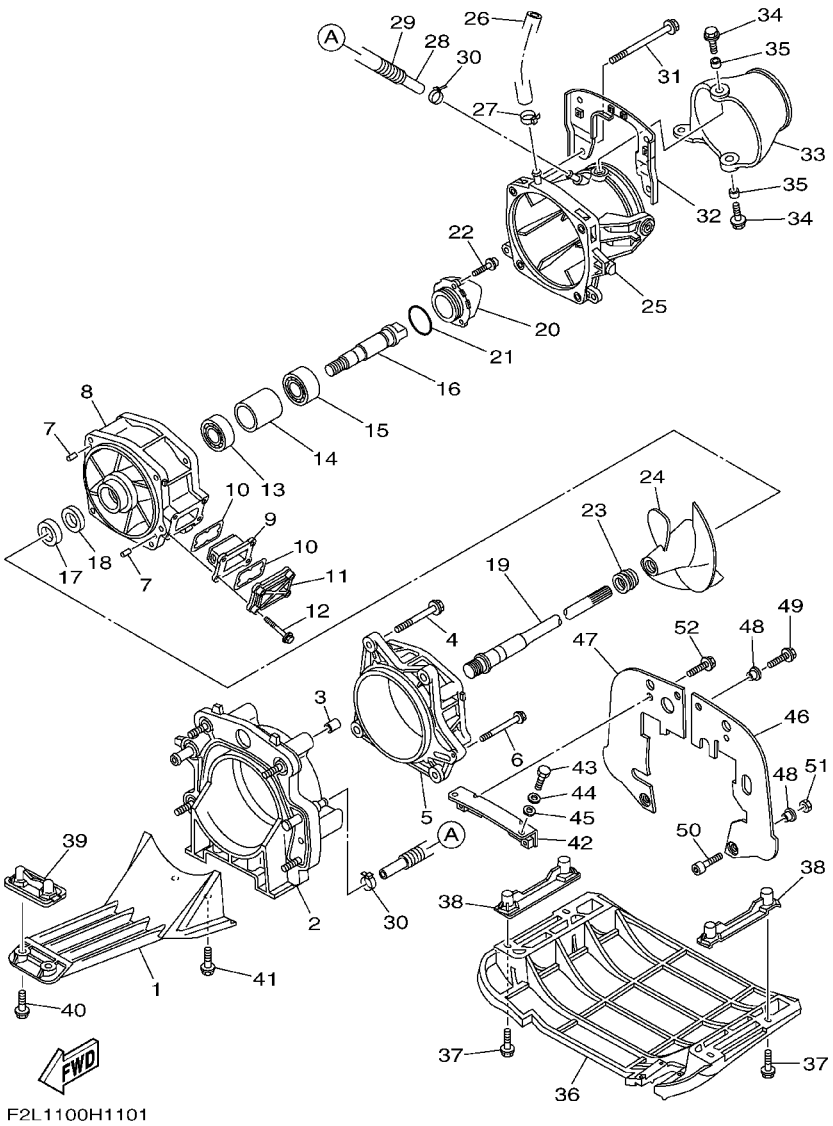

FIG. 11 JET UNIT 1

REF. NO.	PART NO.	DESCRIPTION	CAN	EUR	GENE	JPN		REMARKS
28	90445–14008	HOSE (L355)	1	1	1	1		
29	90446–20MF5	HOSE (L320)	1	1	1	1		
30	90465–11829	CLAMP	2	2	2	2		
31	90119–10837	BOLT, WITH WASHER	4	4	4	4		
32	6D3–R1341–00	BRACKET 1	1	1	1	1		
33	6D3–R1313–00	NOZZLE, DEFLECTOR	1	1	1	1		
34	90119–08840	BOLT, WITH WASHER	2	2	2	2		
35	90387–08M06	COLLAR	2	2	2	2		
36	F1K–U273B–04	PLATE 2	1	1	1	1		
37	90119–08823	BOLT, WITH WASHER	4	4	4	4		
38	F1G–U8572–01	BRACKET 2	2	2	2	2		
39	F1K–U8577–00	BRACKET, 3	1	1	1	1		
40	90119–069UK	BOLT, WITH WASHER	2	2	2	2		
41	90119–10805	BOLT, WITH WASHER	2	2	2	2		
42	F1K–U7557–00	BRACKET	1	1	1	1		
43	90109–08041	BOLT	2	2	2	2		
44	92990–12200	WASHER, PLAIN	2	2	2	2		
45	90430–12002	GASKET	2	2	2	2		
46	F1K–U757E–01	PLATE, RUBBER 1	1	1	1	1		
47	F1K–U757F–01	PLATE, RUBBER 2	1	1	1	1		
48	90387–06080	COLLAR	6	6	6	6		
49	90119–06827	BOLT, WITH WASHER	4	4	4	4		
50	90101–069U0	BOLT	2	2	2	2		
51	9572R–06300	NUT, NYLON	2	2	2	2		
52	90119–089U7	BOLT, WITH WASHER	2	2	2	2		

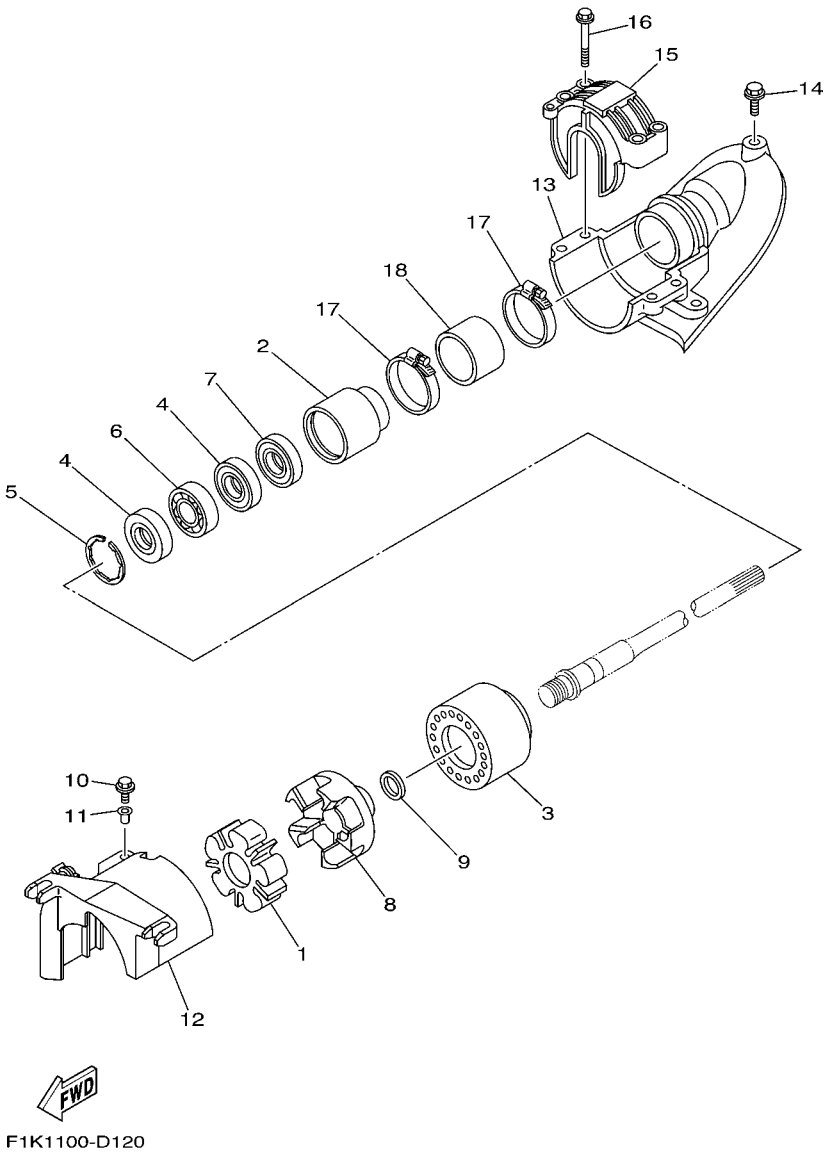

FIG. 12 JET UNIT 2

REF. NO.	PART NO.	DESCRIPTION	CAN	EUR	GENE	JPN		REMARKS
1	6D3–4581J–00	RUBBER SHAFT COUPLING	1	1	1	1		
2	6D3–45332–00–94	HOUSING, BEARING	1	1	1	1		
3	6D3–45235–00	DAMPER	1	1	1	1		
4	93101–25M55	OIL SEAL	2	2	2	2		
5	93430–47M04	CIRCLIP	1	1	1	1		
6	93306–205A3	BEARING	1	1	1	1		
7	93101–25M56	OIL SEAL	1	1	1	1		
8	6D3–45593–00–94	FLANGE, COUPLING 1	1	1	1	1		
9	90201–248M5	WASHER, PLATE	1	1	1	1		
10	90119–069UD	BOLT, WITH WASHER	1	1	1	1		
11	90387–06M60	COLLAR	1	1	1	1		
12	60E–R1381–01	COVER	1	1	1	1		
13	F1K–U883E–00	JOINT, PIPE	1	1	1	1		
14	90109–06832	BOLT	3	3	3	3		
15	F1K–U2155–00	CAP	1	1	1	1		
16	90119–089UU	BOLT, WITH WASHER	4	4	4	4		
17	90601–162U5	BAND, HOSE 62	2	2	2	2		
18	F1K–U883B–00	PIPE, 1	1	1	1	1		

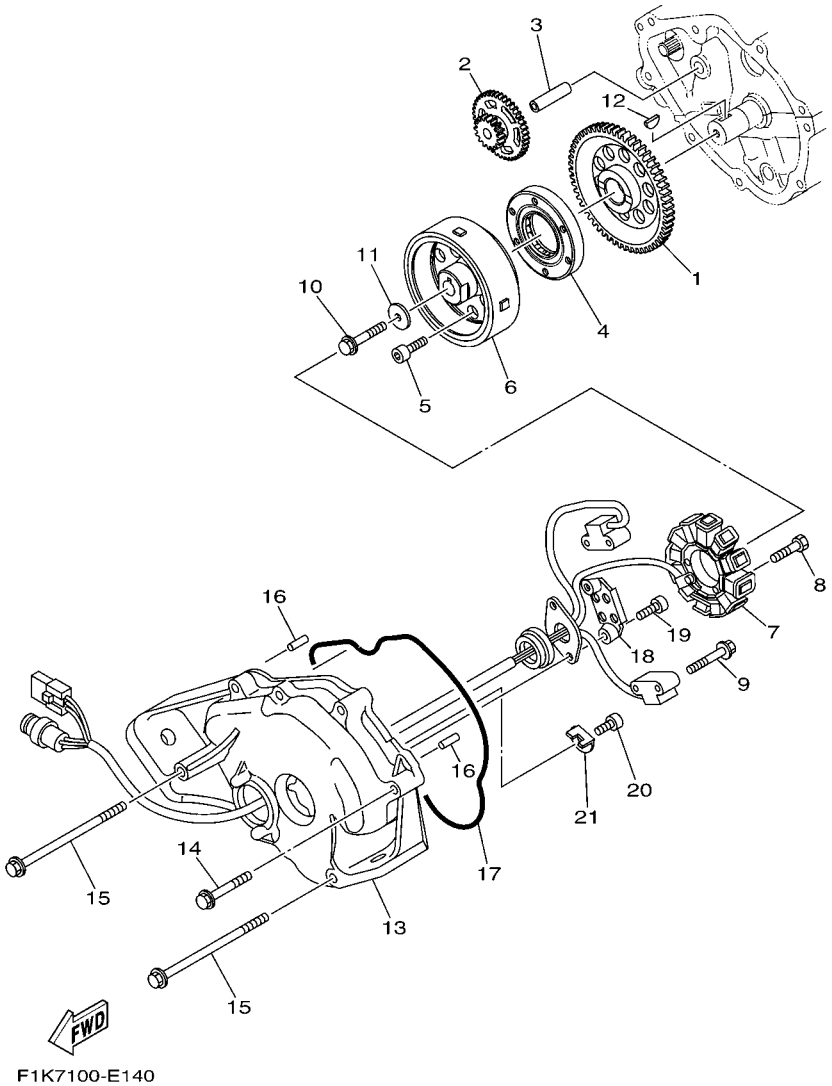

FIG. 13 GENERATOR

REF. NO.	PART NO.	DESCRIPTION	CAN	EUR	GENE	JPN		REMARKS
1	6D3–15515–00	GEAR 3	1	1	1	1		
2	60E–15517–00	GEAR, IDLER 2	1	1	1	1		
3	60E–15521–00	SHAFT 1	1	1	1	1		
4	4WM–15590–00	STARTER ONE-WAY ASSY	1	1	1	1		
5	90110–08212	BOLT, HEXAGON SOCKET HEAD	6	6	6	6		
6	6D3–81450–00	ROTOR ASSY	1	1	1	1		
7	6D3–81410–01	STATOR ASSY	1	1	1	1		
8	91317–06035	BOLT	3	3	3	3		
9	97513–05514	BOLT, WITH WASHER	2	2	2	2		
10	90105–105A6	BOLT, FLANGE	1	1	1	1		
11	90201–103U7	WASHER, PLATE	1	1	1	1		
12	90280–03047	KEY, WOODRUFF	1	1	1	1		
13	6D3–81337–00–94	COVER, FLYWHEEL	1	1	1	1		
14	90119–10016	BOLT, WITH WASHER	6	6	6	6		
15	90119–10M19	BOLT, WITH WASHER	2	2	2	2		
16	93608–16M16	PIN, DOWEL	2	2	2	2		
17	93212–04001	O-RING	1	1	1	1		
18	60E–81328–00	CLAMP	1	1	1	1		
19	91317–06014	BOLT	2	2	2	2		
20	91317–05010	BOLT	1	1	1	1		
21	6D3–81845–00	PLATE	1	1	1	1		

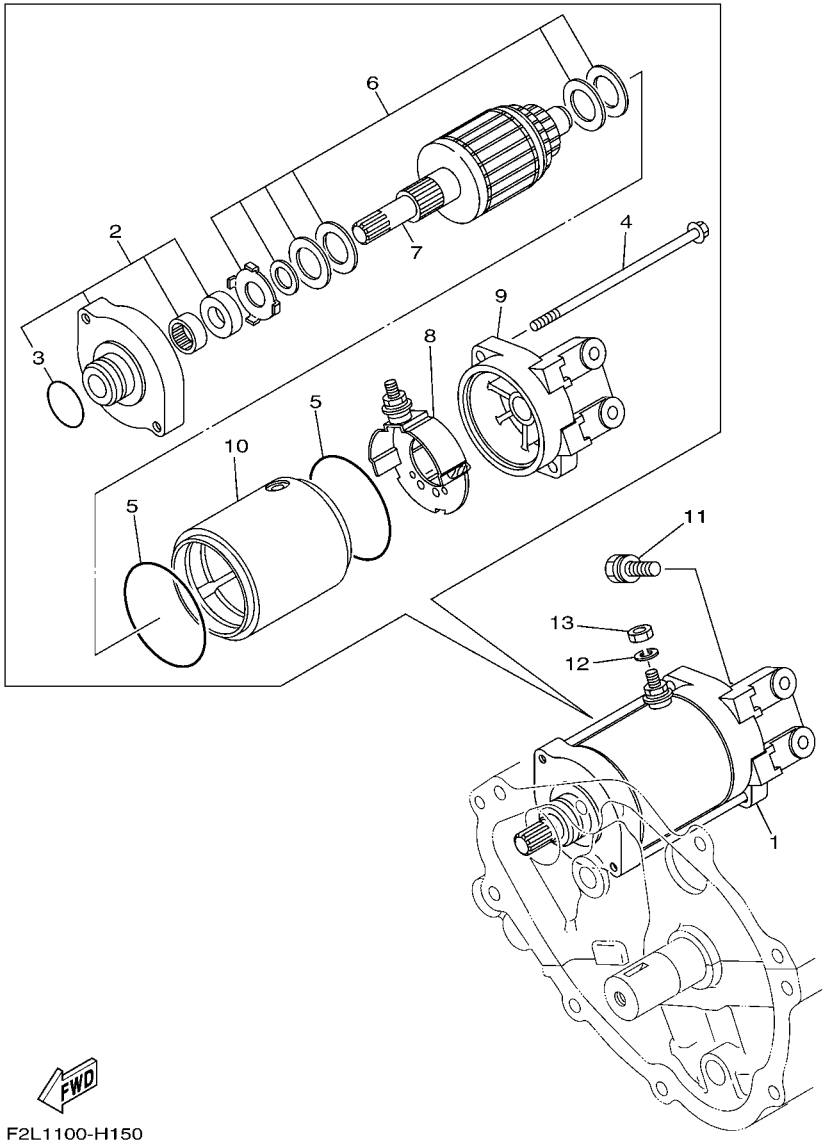

FIG. 14 STARTING MOTOR

REF. NO.	PART NO.	DESCRIPTION	CAN	EUR	GENE	JPN		REMARKS
1	6D3–81800–00	STARTING MOTOR ASSY	1	1	1	1		
2	6M6–81830–00	.FRONT BRACKET ASSY	1	1	1	1		
3	1FK–81847–00	..O-RING	1	1	1	1		
4	6M6–81826–00	.BOLT	2	2	2	2		
5	11H–81844–00	.GASKET	2	2	2	2		
6	3AJ–81809–00	.WASHER KIT	1	1	1	1		
7	6M6–81850–00	.ARMATURE ASSY	1	1	1	1		
8	6M6–81840–10	.BRUSH HOLDER ASSY	1	1	1	1		
9	6D3–81820–00	.REAR BRACKET ASSY	1	1	1	1		
10	60E–81810–00	.STATOR ASSY	1	1	1	1		
11	97513–08530	BOLT, WITH WASHER	2	2	2	2		
12	92990–06100	WASHER, SPRING	1	1	1	1		
13	95380–06700	NUT	1	1	1	1		

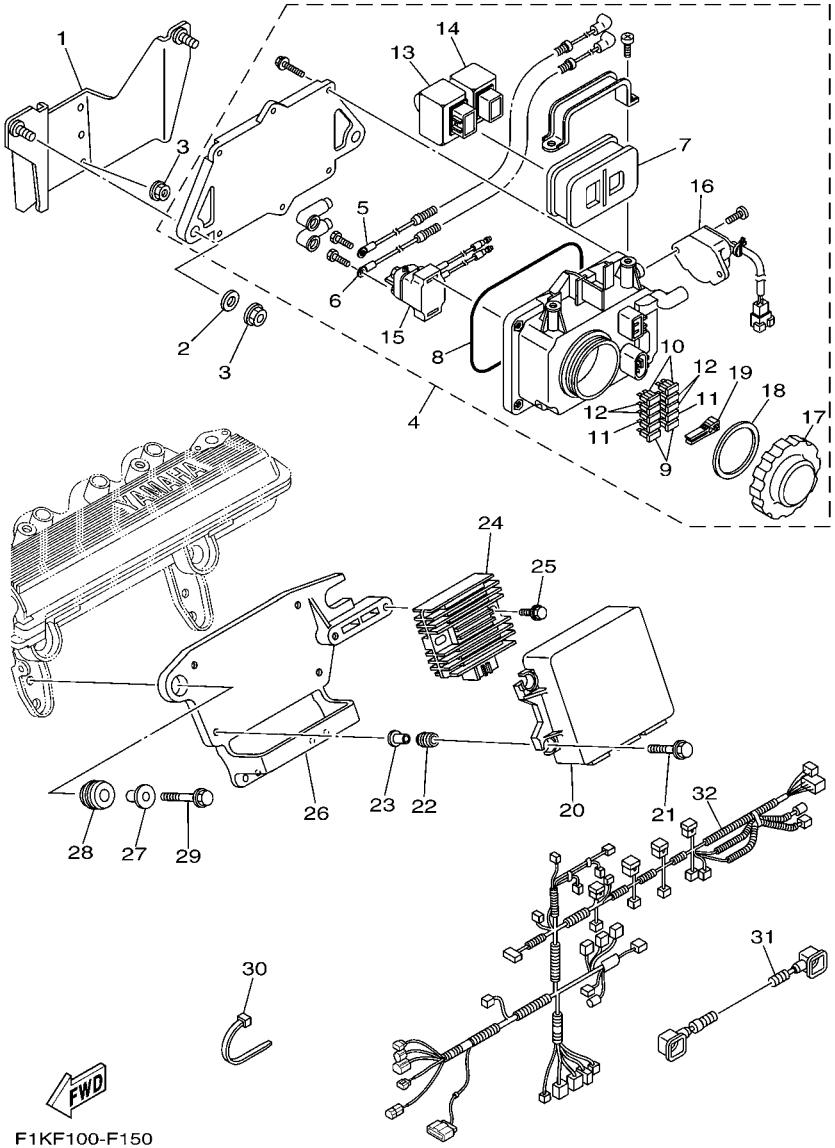

FIG. 15 ELECTRICAL 1

REF. NO.	PART NO.	DESCRIPTION	CAN	EUR	GENE	JPN		REMARKS
1	F1K–U815D–00	BRACKET, ELECTRIC BOX	1	1	1	1		
2	90201–099U3	WASHER, PLATE	2	2	2	2		
3	9572R–08300	NUT, FLANGE	6	6	6	6		
4	6D3–82170–00	FUSE BOX ASSY	1	1	1	1		
5	6D3–82115–00	.WIRE, PLUS LEAD	1	1	1	1		
6	6D3–82117–00	.WIRE, LEAD	1	1	1	1		
7	6D3–82157–00	.DAMPER	1	1	1	1		
8	6D3–81921–00	.GASKET, TERMINAL	1	1	1	1		
9	67F–82151–00	.FUSE (20A)	2	2	2	2		
10	67F–82151–10	.FUSE (30A)	2	2	2	2		
11	67F–82151–30	.FUSE (3A)	2	2	2	2		
12	67F–82151–40	.FUSE (10A)	4	4	4	4		
13	60E–81950–00	.RELAY ASSY	1	1	1	1		
14	68V–81950–00	.RELAY ASSY	1	1	1	1		
15	6B6–81940–00	.STARTER RELAY ASSY	1	1	1	1		
16	60E–8259E–00	.SWITCH ASSY	1	1	1	1		
17	66V–8132W–00	.CAP	1	1	1	1		
18	66V–81844–00	.GASKET	1	1	1	1		
19	67F–2812A–00	.PULLER, FUSE	1	1	1	1		
20	6D3–8591A–21	ENGINE CONTROL UNIT ASSY	1		1	1		EXCEPT EUR
	6D3–8591A–11	ENGINE CONTROL UNIT ASSY		1				FOR EUR
21	90119–06M35	BOLT, WITH WASHER	4	4	4	4		
22	6A0–82317–00	DAMPER, IGNITION COIL	4	4	4	4		
23	90387–06119	COLLAR	4	4	4	4		
24	6S8–81960–00	RECTIFIER & REGULATOR ASSY	1	1	1	1		
25	90119–06M35	BOLT, WITH WASHER	2	2	2	2		
26	6D3–85991–01	BRACKET, UNIT	1	1	1	1		

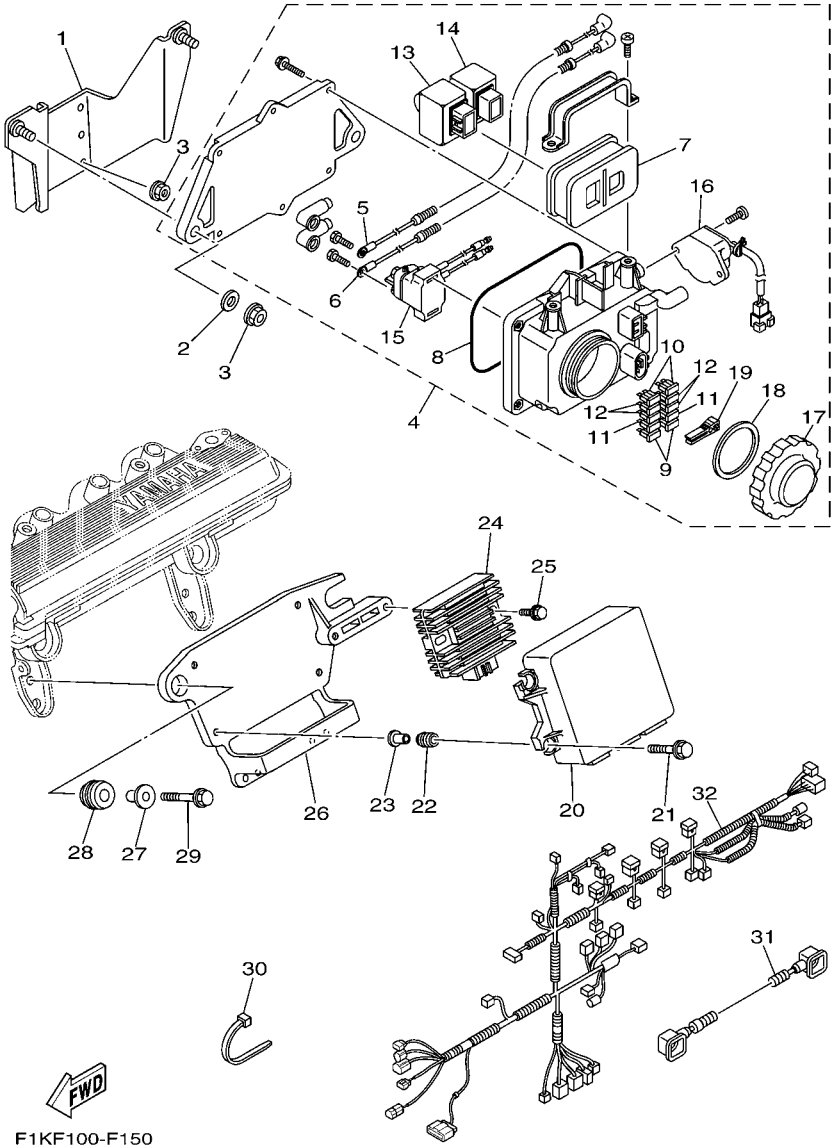

FIG. 15 ELECTRICAL 1

REF. NO.	PART NO.	DESCRIPTION	CAN	EUR	GENE	JPN		REMARKS
27	90387–08M37	COLLAR	2	2	2	2		
28	90480–22M15	GROMMET	2	2	2	2		
29	90119–08M22	BOLT, WITH WASHER	2	2	2	2		
30	90464–35132	CLAMP	2	2	2	2		
31	6D3–82116–00	WIRE, MINUS LEAD	1	1	1	1		
32	6D3–8259L–04	WIRE HARNESS ASSY 1	1	1	1	1		

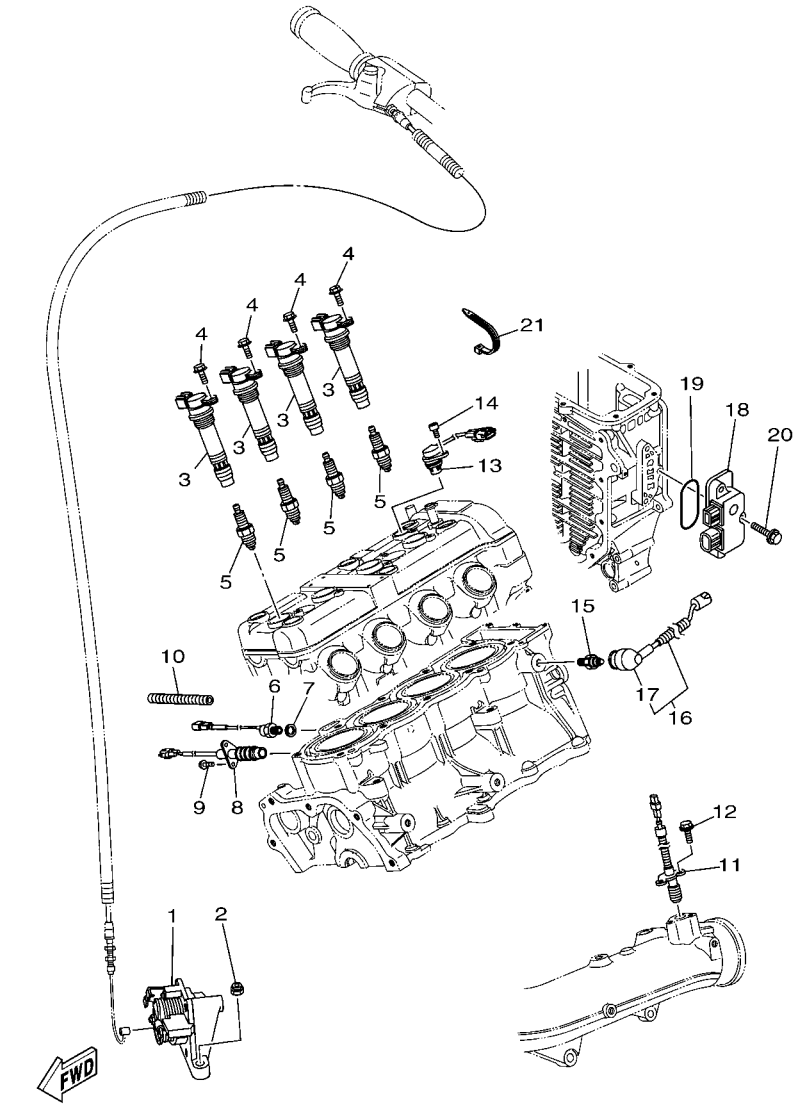

F1KF100-F160

FIG. 16 ELECTRICAL 2

REF. NO.	PART NO.	DESCRIPTION	CAN	EUR	GENE	JPN		REMARKS
1	6D3–14305–21	ACCEL. POSITON SENSOR ASSY	1	1	1	1		
2	95780–08300	NUT, FLANGE	2	2	2	2		
3	6D3–82310–00	IGNITION COIL ASSY	4	4	4	4		
4	95880–06016	BOLT, FLANGE	4	4	4	4		
5	94702–00409	PLUG, SPARK (NGK CR9EB)	4	4	4			EXCEPT JPN
	94709–00409	PLUG, SPARK (NGK CR9EB)				4		FOR JPN
6	61A–85790–00	THERMOSENSOR ASSY	1	1	1	1		
7	92990–10600	WASHER, PLATE	1	1	1	1		
8	60E–82560–A1	THERMO SWITCH ASSY	1	1	1	1		
9	97595–06416	BOLT, WITH WASHER	2	2	2	2		
10	90446–14M23	HOSE (L180)	1	1	1	1		
11	6D3–82560–01	THERMO SWITCH ASSY	1	1	1	1		
12	97595–06416	BOLT, WITH WASHER	2	2	2	2		
13	6D3–85896–00	SENSOR, CAM POSITION	1	1	1	1		
14	91380–06016	BOLT	1	1	1	1		
15	68V–82504–00	OIL PRESSURE SWITCH ASSY	1	1	1	1		
16	60E–81315–00	LEAD WIRE ASSY	1	1	1	1		
17	60E–82532–00	.CAP	1	1	1	1		
18	6D3–8273J–01	EARTH PLATE COMP.	1	1	1	1		
19	93210–60ME8	O-RING	1	1	1	1		
20	90119–06048	BOLT, WITH WASHER	3	3	3	3		
21	90465–13M18	CLAMP	2	2	2	2		

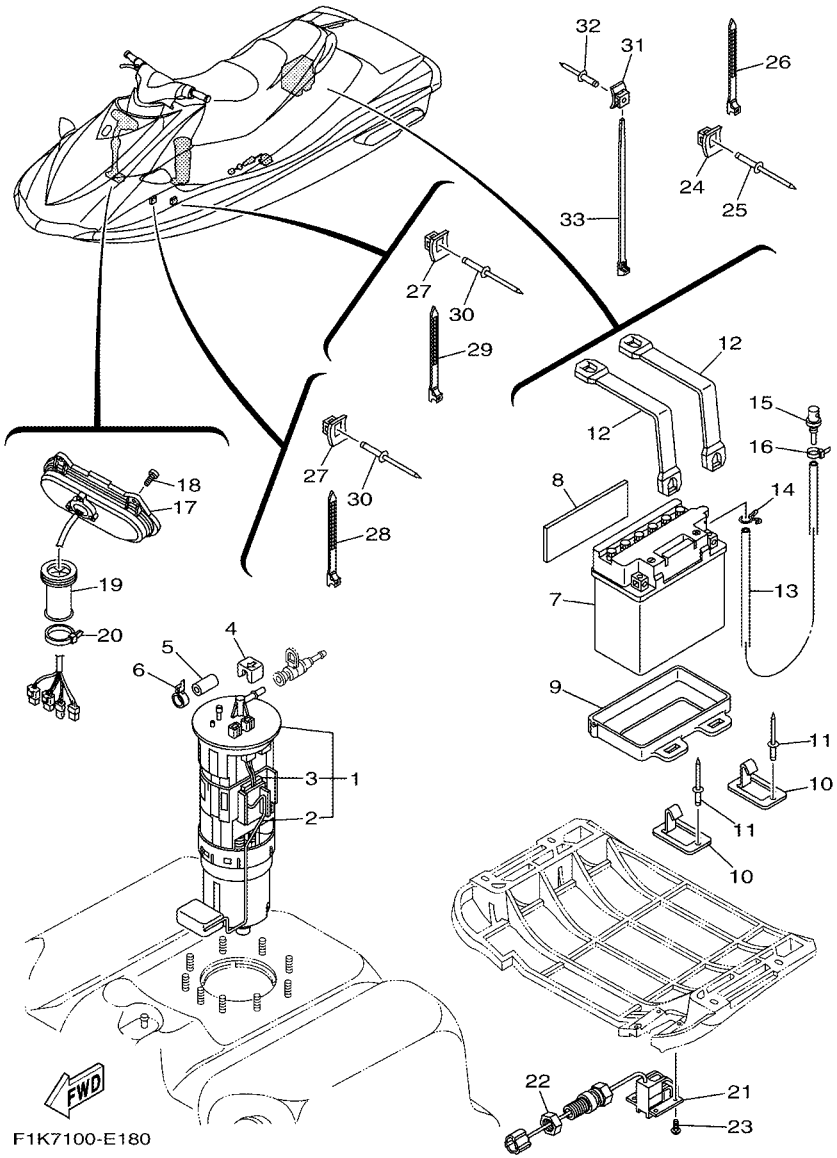

FIG. 17 ELECTRICAL 3

REF. NO.	PART NO.	DESCRIPTION	CAN	EUR	GENE	JPN		REMARKS
1	60E–13907–02	FUEL PUMP COMP.	1	1	1	1		
2	60E–682E0–00	.FUEL SENDER ASSY	1	1	1	1		
3	60E–82556–00	.DAMPER, STOPPER	1	1	1	1		
4	60E–24474–00	COVER	1	1	1	1		
5	6D3–24481–00	PLUG	1	1	1	1		
6	6D3–24387–00	CLIP	1	1	1	1		
7	EU0–82110–09	BATTERY ASSY (YB16CL-B)	1	1	1	1		YUASA
8	F1K–U8221–00	PAD, BATTERY	1	1	1	1		
9	F1K–U8211–01	CASE, BATTERY	1	1	1	1		
10	F1K–U5772–02	HOOK A	4	4	4	4		
11	90267–489U1	RIVET,BLIND	4	4	4	4		
12	F1K–U821D–00	BAND, BATTERY 1	2	2	2	2		
13	F0D–U785G–10	HOSE, AIR VENT	1	1	1	1		
14	90467–089U1	CLIP	1	1	1	1		
15	GJ3–6215F–00	NIPPLE	1	1	1	1		
16	90465–11829	CLAMP	1	1	1	1		
17	F1K–6820A–11	METER ASSY	1	1	1	1		
18	90111–05008	BOLT,HEX. SOCKET BUTTON	4	4	4	4		
19	GU2–6822E–01	GROMMET	1	1	1	1		
20	90464–32801	CLAMP	1	1	1	1		
21	F1S–U8K31–02	SENSOR SPEED	1	1	1	1		
22	EU0–62241–30	NUT, DRAIN 1	1	1	1	1		
23	90150–05807	SCREW, ROUND HEAD	4	4	4	4		
24	90600–91736	CLAMP COMP.	6	6	6	6		
25	90267–48802	RIVET, BLIND	6	6	6	6		
26	90464–32801	CLAMP	6	6	6	6		
27	90600–91736	CLAMP COMP.	2	2	2	2		

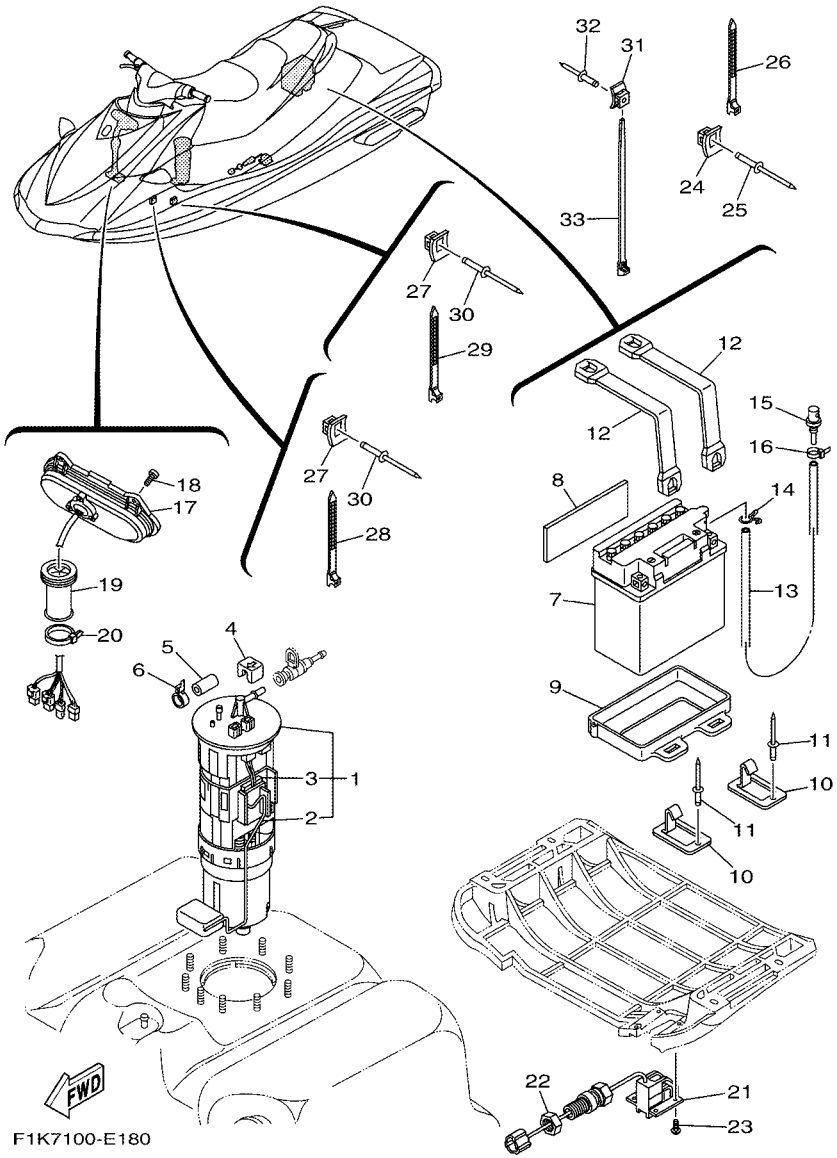

FIG. 17 ELECTRICAL 3

REF. NO.	PART NO.	DESCRIPTION	CAN	EUR	GENE	JPN		REMARKS
28	90464–32801	CLAMP	1	1	1	1		
29	90601–200U2	BAND	1	1	1	1		
30	90267–489U6	RIVET, BLIND	2	2	2	2		
31	90600–91736	CLAMP COMP.	1	1	1	1		
32	90267–48802	RIVET, BLIND	1	1	1	1		
33	90464–32801	CLAMP	1	1	1	1		

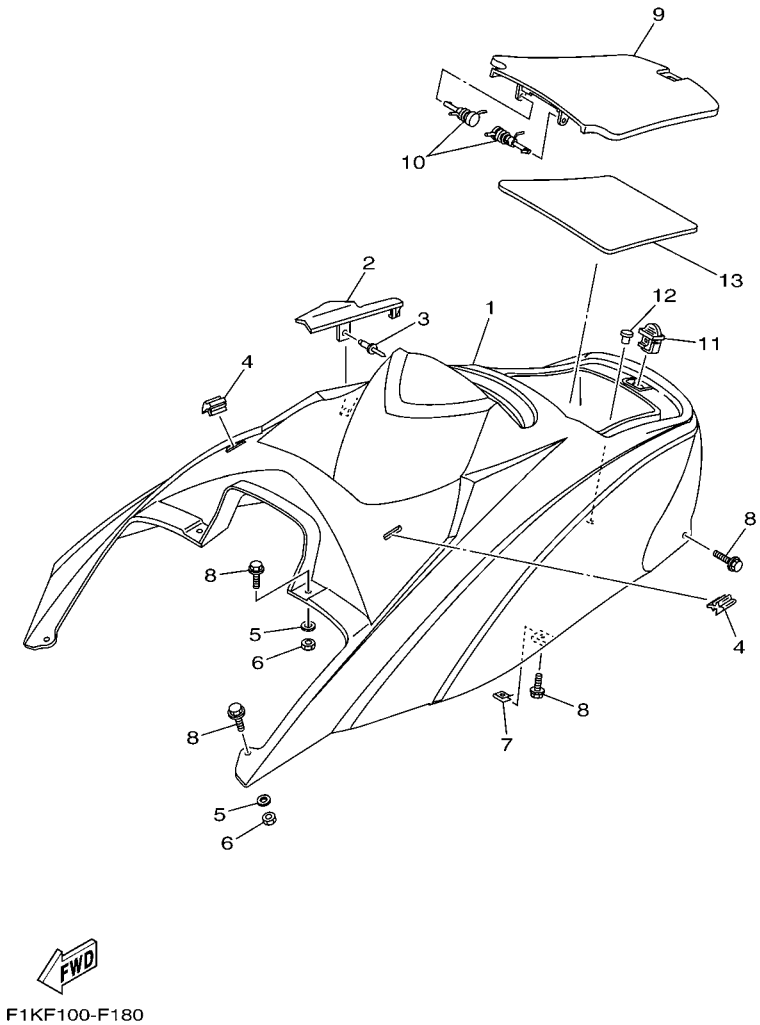

FIG. 18 ENGINE HATCH 1

REF. NO.	PART NO.	DESCRIPTION	CAN	EUR	GENE	JPN		REMARKS
1	F1K–U516N–11–P0	COVER, ENGINE HATCH	1	1	1	1		DPBMT
2	F1K–U2723–00	SEAL	1	1	1	1		
3	90269–09805	RIVET	1	1	1	1		
4	F1K–U266C–00	PACKING 4	2	2	2	2		
5	9299R–06200	WASHER	4	4	4	4		
6	9572R–06300	NUT, NYLON	4	4	4	4		
7	90183–06902	NUT, SPRING	2	2	2	2		
8	90119–06882	BOLT, WITH WASHER	8	8	8	8		
9	F1K–U517H–01	LID HATCH	1	1	1	1		
10	F0X–6517R–01	PIN, HINGE	2	2	2	2		
11	GU2–62875–01	LOCK	1	1	1	1		
12	90605–502U1	PLUG, BLIND	1	1	1	1		
13	F1K–U519D–00	PACKING CASE	1	1	1	1		

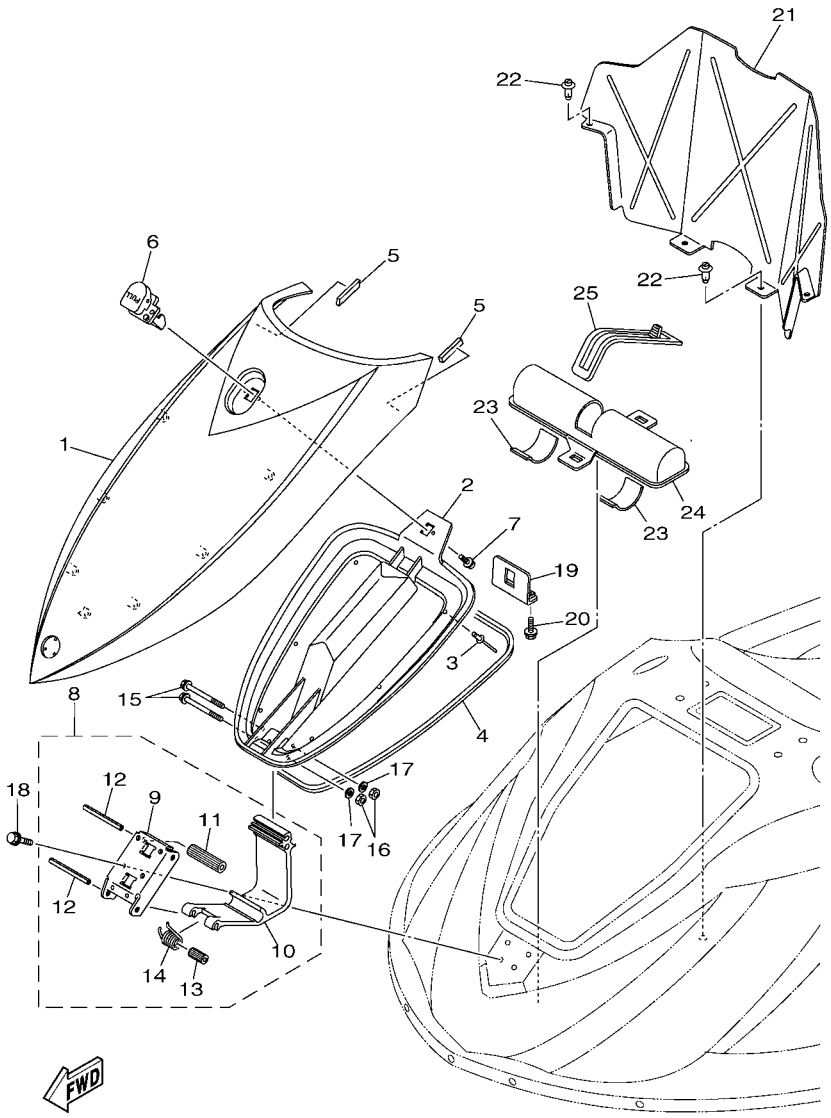

F1K1100-D200

FIG. 19 ENGINE HATCH 2

REF. NO.	PART NO.	DESCRIPTION	CAN	EUR	GENE	JPN		REMARKS
1	F1K–U517B–10–P0	LID, ENGINE ROOM	1	1	1	1		DPBMT
2	F1K–U2103–00	VENTILATOR COVER COMP., 2	1	1	1	1		
3	90267–48809	RIVET, BLIND	7	7	7	7		
4	F1K–U2663–00	PACKING 1	1	1	1	1		
5	F1K–U266B–00	PACKING 3	2	2	2	2		
6	F1K–6517C–00	LOCK, LID	1	1	1	1		
7	90159–059U2	SCREW, WITH WASHER	2	2	2	2		
8	F1K–U515A–00	HINGE ASSY.	1	1	1	1		
9	F1K–U518E–04	.PLATE, HINGE LID	1	1	1	1		
10	F1K–U517D–05	.HINGE, LID	1	1	1	1		
11	F1K–U135C–00	.ROLLER, DETENT	1	1	1	1		
12	F1K–U517R–00	.PIN, HINGE	2	2	2	2		
13	F1K–U471E–03	.SPACER 1	1	1	1	1		
14	F1K–U283B–02	.SPRING, TORSION	1	1	1	1		
15	90105–06826	BOLT, FLANGE	2	2	2	2		
16	9572R–06300	NUT, NYLON	2	2	2	2		
17	9299R–06200	WASHER	2	2	2	2		
18	90119–069UH	BOLT, WITH WASHER	4	4	4	4		
19	F1K–U517F–01	HOOK,LID LOCK	1	1	1	1		
20	90119–069UH	BOLT, WITH WASHER	2	2	2	2		
21	F1K–U475F–01	PLATE, LOKER BOW	1	1	1	1		
22	90269–08801	RIVET	4	4	4	4		
23	F1K–U759C–00	MAT 2	2	2	2	2		
24	F1K–U5983–01	BOX, FIRE EXTINGUISHER	1	1	1	1		
25	F1K–U828K–00	BAND, 1	1	1	1	1		

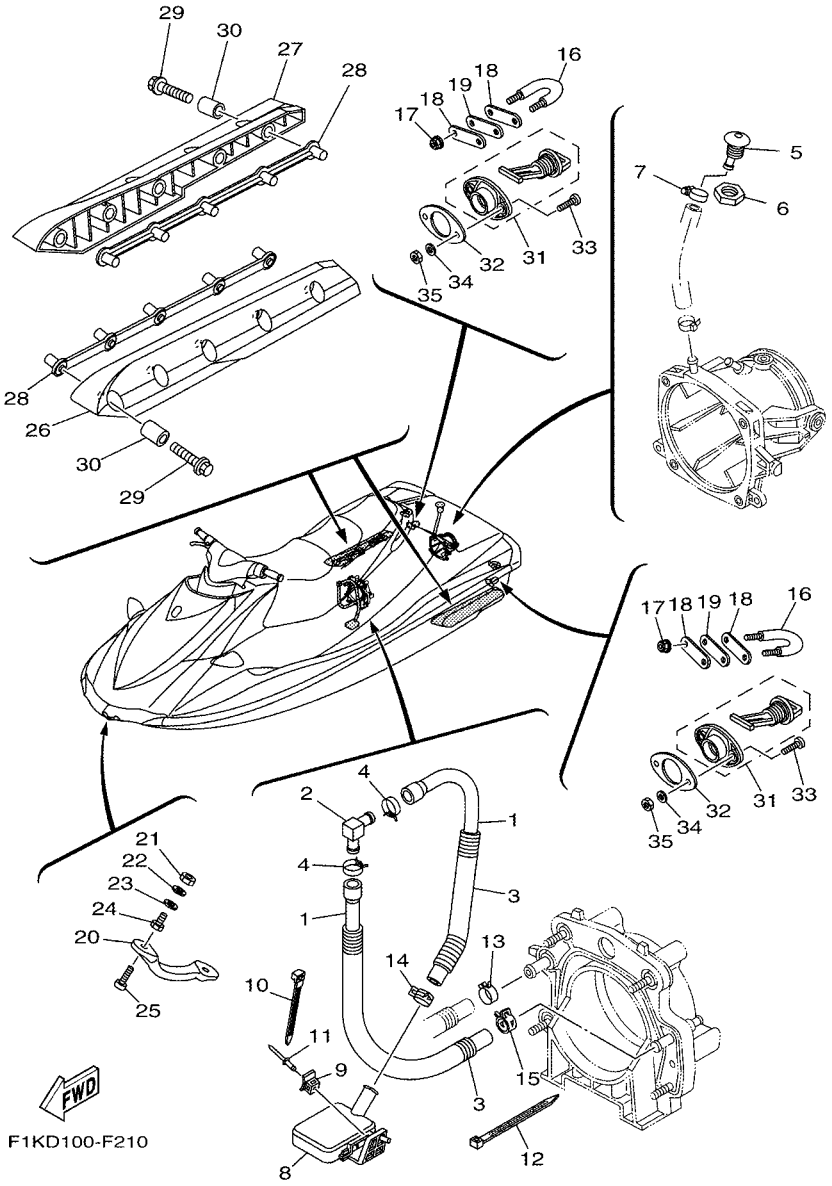

FIG. 20 HULL & DECK

REF. NO.	PART NO.	DESCRIPTION	CAN	EUR	GENE	JPN		REMARKS
1	90445–20805	HOSE (L710)	2	2	2	2		
2	61X–51162–00	JOINT, HOSE	1	1	1	1		
3	90446–27M55	TUBE (L400)	2	2	2	2		
4	90467–18804	CLIP	2	2	2	2		
5	FN8–6269B–00	SPOUT	1	1	1	1		
6	EU0–61652–00	NUT	1	1	1	1		
7	90601–118UF	BAND, HOSE 18	1	1	1	1		
8	F1B–U761D–02	STRAINER, BILGE	1	1	1	1		
9	90600–91736	CLAMP COMP.	1	1	1	1		
10	90464–32801	CLAMP	1	1	1	1		
11	90267–489U8	RIVET, BLIND	1	1	1	1		
12	90601–200U1	BAND	1	1	1	1		
13	90467–21800	CLIP	1	1	1	1		
14	90467–200A0	CLIP	1	1	1	1		
15	90467–210A0	CLIP	1	1	1	1		
16	F1K–61628–00	STERN EYE	2	2	2	2		
17	9572R–08300	NUT, FLANGE	4	4	4	4		
18	GP7–U4953–10	PLATE A	4	4	4	4		
19	F1B–U1653–01	PACKING	2	2	2	2		
20	F0X–61624–00	BOWEYE 1	1	1	1	1		
21	99780–12600	NUT.HEX.(COARS)	2	2	2	2		
22	92990–12200	WASHER, PLAIN	2	2	2	2		
23	F0X–61637–00	WASHER	2	2	2	2		
24	F0X–61652–00	NUT (BOLT/NUT)	2	2	2	2		
25	90110–06040	BOLT, HEXAGON SOCKET HEAD	2	2	2	2		
26	F1S–U883N–01	STABILIZER LH	1	1	1	1		BLACK
27	F1S–U883P–01	STABILIZER RH	1	1	1	1		BLACK

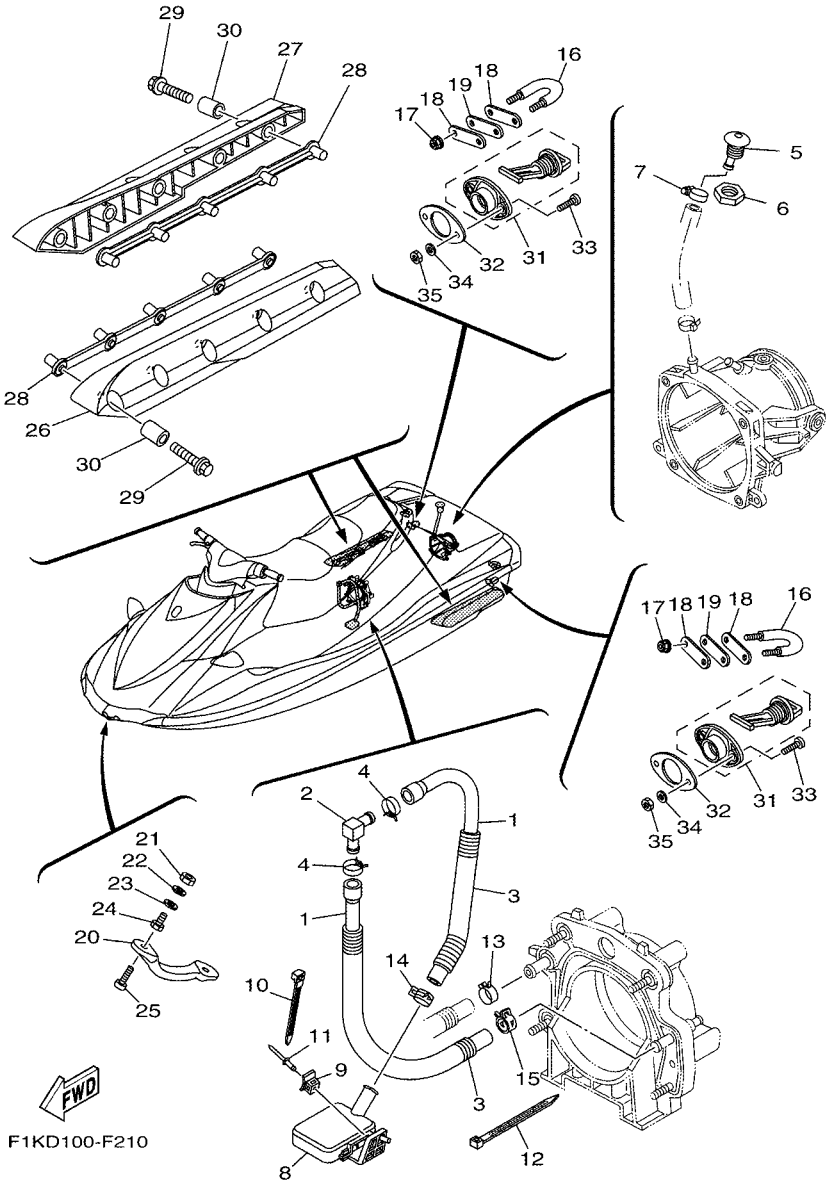

FIG. 20 HULL & DECK

REF. NO.	PART NO.	DESCRIPTION	CAN	EUR	GENE	JPN		REMARKS
28	F1X–U883T–00	BRACKET,STABILIZER	2	2	2	2		
29	90105–08860	BOLT, FLANGE	10	10	10	10		
30	F1K–U8169–00	SPACER	10	10	10	10		
31	F1S–U2280–00	DRAIN PLUG ASSY.	2	2	2	2		
32	F1S–U2285–00	PACKING, DRAIN	2	2	2	2		
33	9788R–05025	SCREW, PAN HEAD	4	4	4	4		
34	9299R–05200	WASHER	4	4	4	4		
35	9572R–05300	NUT, FLANGE	4	4	4	4		

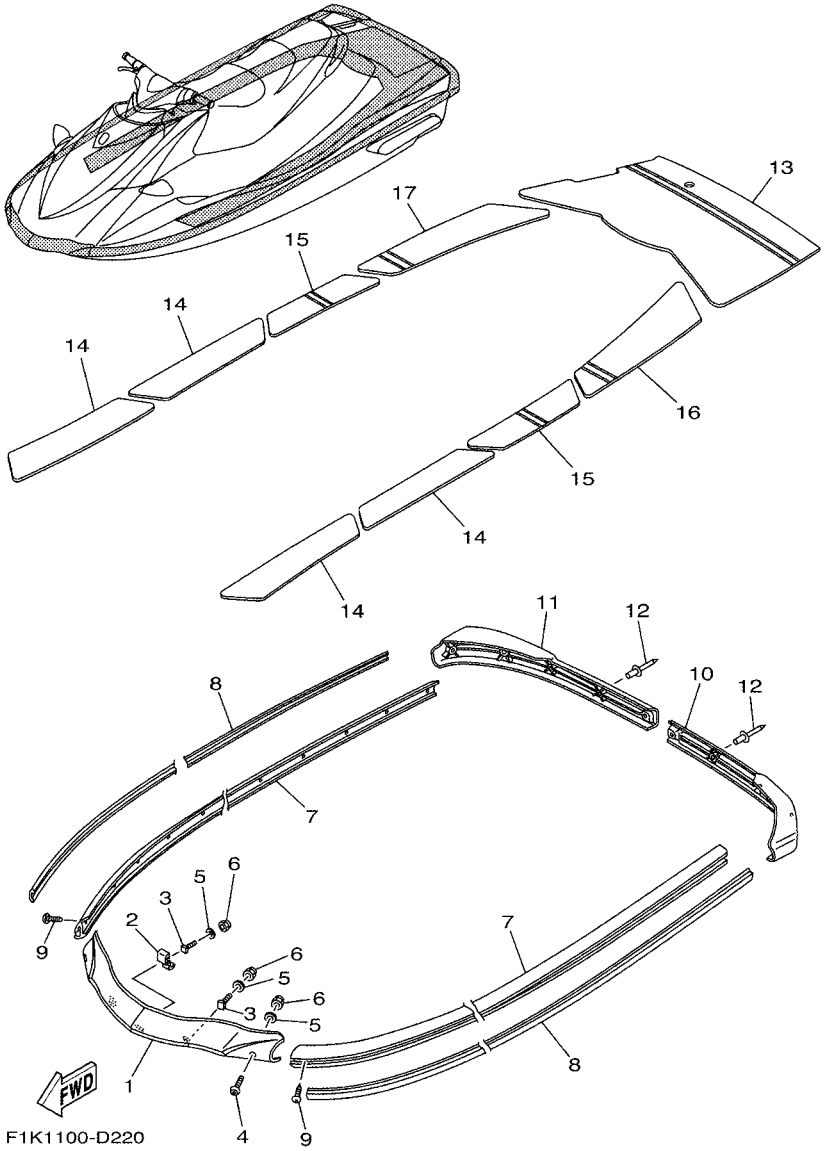

FIG. 21 GUNWALE & MAT

REF. NO.	PART NO.	DESCRIPTION	CAN	EUR	GENE	JPN		REMARKS
1	F1K–U2501–02	BOW GUNWALE COMP.	1	1	1	1		GRAY
2	F1K–U2521–02	PLATE	1	1	1	1		
3	F1W–U491K–00	BOLT, SPECIAL	3	3	3	3		
4	90111–06803	BOLT,HEX. SOCKET BUTTON	2	2	2	2		
5	9299R–06200	WASHER	5	5	5	5		
6	9572R–06300	NUT, NYLON	5	5	5	5		
7	F1K–U2512–03	GUNWALE, SIDE	2	2	2	2		GRAY
8	F1K–U2519–11	INNER,GUNWALE	2	2	2	2		
9	90169–059U1	SCREW,TAPPING	30	30	30	30		
10	F1K–U251D–01	GUNWALE, STERN 1	1	1	1	1		GRAY
11	F1K–U251E–01	GUNWALE, STERN 2	1	1	1	1		GRAY
12	90267–47801	RIVET, BLIND	9	9	9	9		
13	F1K–U3581–10	MAT, UPPER	1	1	1	1		GRAY
14	F1K–U351H–10	MAT, STEP 1	4	4	4	4		GRAY
15	F1K–U351J–10	MAT, STEP 2	2	2	2	2		GRAY
16	F1K–U351K–10	MAT, STEP 3	1	1	1	1		GRAY
17	F1K–U351M–10	MAT, STEP 4	1	1	1	1		GRAY

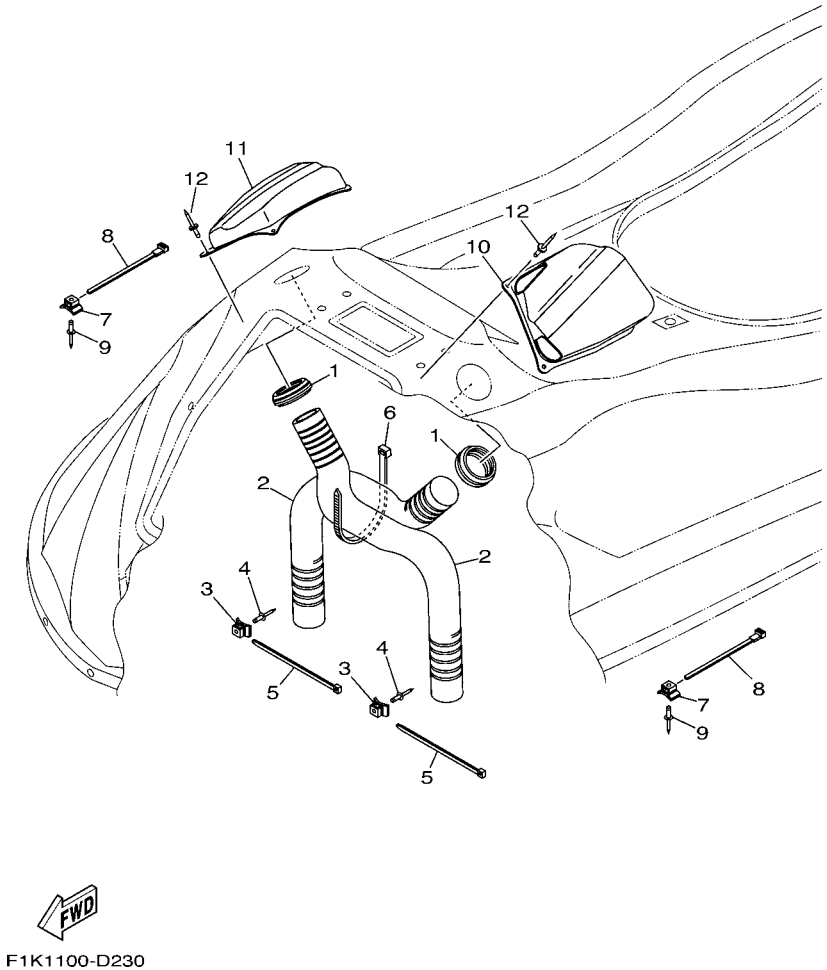

FIG. 22 VENTILATION

REF. NO.	PART NO.	DESCRIPTION	CAN	EUR	GENE	JPN		REMARKS
1	F1K–U2127–00	BASE, AIR INTAKE	2	2	2	2		
2	F1K–U213G–00	HOSE, VENTILATOR 2	2	2	2	2		
3	90600–91736	CLAMP COMP.	2	2	2	2		
4	90267–48802	RIVET, BLIND	2	2	2	2		
5	90464–99804	CLAMP	2	2	2	2		
6	90601–200U7	BAND	1	1	1	1		
7	90600–91736	CLAMP COMP.	2	2	2	2		
8	90464–32801	CLAMP	2	2	2	2		
9	90267–489U6	RIVET, BLIND	2	2	2	2		
10	F1K–U2187–00	BOX, INDUCTION 1	1	1	1	1		
11	F1K–U2188–00	BOX, INDUCTION 2	1	1	1	1		
12	90267–48806	RIVET, BLIND	8	8	8	8		

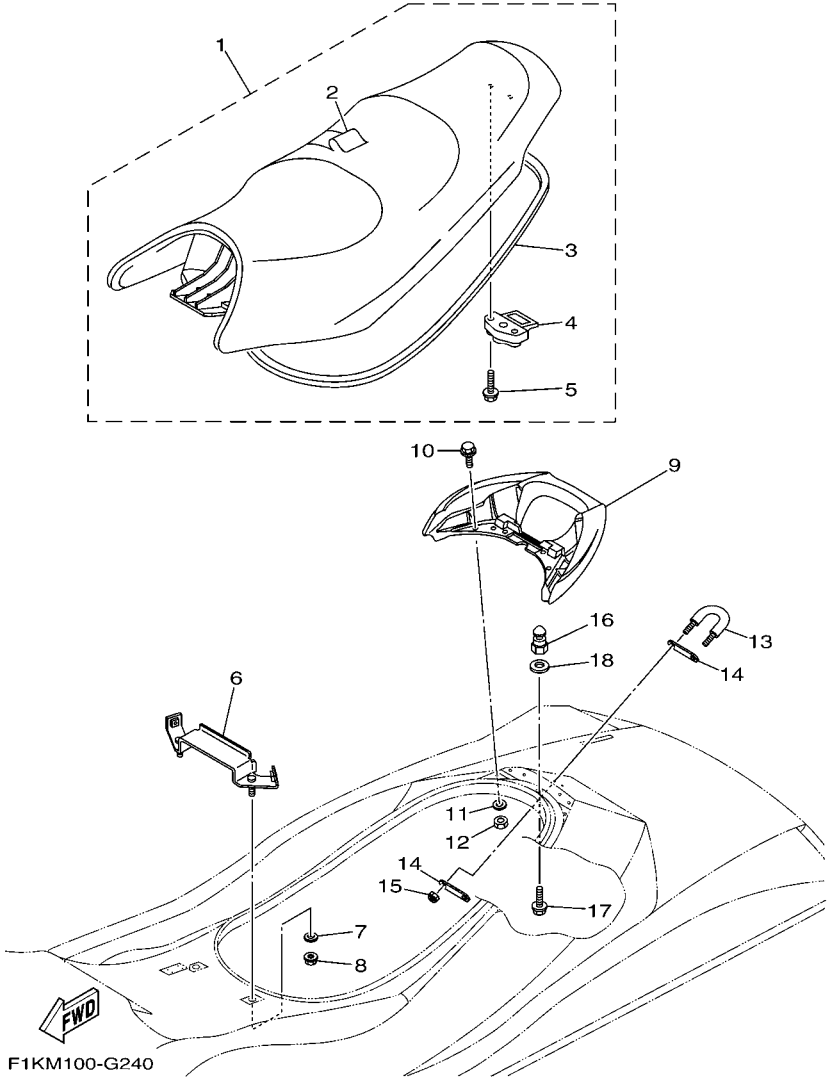

FIG. 23 SEAT & UNDER LOCKER

REF. NO.	PART NO.	DESCRIPTION	CAN	EUR	GENE	JPN		REMARKS
1	F1K–U371A–12	DOUBLE SEAT ASSY	1	1	1	1		
2	F1K–U371B–10	.COVER, SEAT 1	1	1	1	1		
3	F1K–U2664–01	.PACKING	1	1	1	1		
4	F1B–U3850–02	.SEAT LOCK ASSY	1	1	1	1		
5	90119–069UP	.BOLT, WITH WASHER	2	2	2	2		
6	F1K–U378C–00	STAY, SEAT 1	1	1	1	1		
7	90201–099U3	WASHER, PLATE	2	2	2	2		
8	9572R–08300	NUT, FLANGE	2	2	2	2		
9	F1K–U271B–04	GRIP, HAND	1	1	1	1		
10	90119–06820	BOLT, WITH WASHER	4	4	4	4		
11	9299R–06200	WASHER	4	4	4	4		
12	9572R–06300	NUT, NYLON	4	4	4	4		
13	F1K–61628–00	STERN EYE	1	1	1	1		
14	GP7–U4953–10	PLATE A	2	2	2	2		
15	9572R–08300	NUT, FLANGE	2	2	2	2		
16	F1K–U3774–00	PIN	1	1	1	1		
17	90119–10804	BOLT, WITH WASHER	1	1	1	1		
18	9299R–10200	WASHER	1	1	1	1		

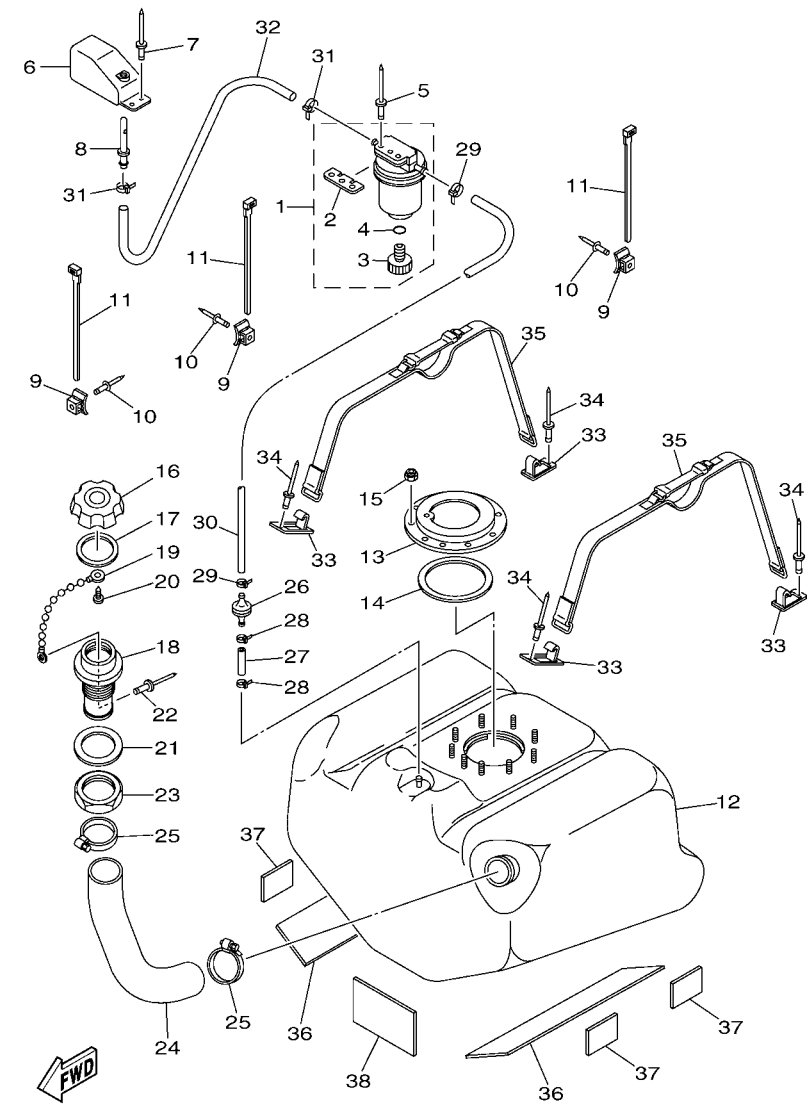

F1K7100-E250

FIG. 24 FUEL TANK

REF. NO.	PART NO.	DESCRIPTION	CAN	EUR	GENE	JPN		REMARKS
1	F2F–6214A–00	FILTER, VENT ASSY	1	1	1	1		
2	EW2–62142–00	.PLATE, FILTER	1	1	1	1		
3	70R–24543–00	.PLUG, DRAIN	1	1	1	1		
4	70R–24489–00	.O-RING	1	1	1	1		
5	90267–489U2	RIVET, BLIND	2	2	2	2		
6	GP7–62159–02	SOCKET, VENTILATION	1	1	1	1		
7	90267–489U6	RIVET, BLIND	2	2	2	2		
8	F1G–62149–00	PIPE, VENTILATION	1	1	1	1		
9	90600–91736	CLAMP COMP.	3	3	3	3		
10	90267–48802	RIVET, BLIND	3	3	3	3		
11	90464–32801	CLAMP	3	3	3	3		
12	F1K–U7711–02	TANK, FUEL	1	1	1	1		
13	F1B–U7773–00	RING	1	1	1	1		
14	F1B–67747–00	PACKING, SEAL	1	1	1	1		
15	9572R–06300	NUT, NYLON	9	9	9	9		
16	GP7–U7831–01	CAP, FUEL FILLER	1	1	1	1		PURW
17	GP7–U7832–01	PACKING	1	1	1	1		
18	GP7–U7833–00	SOCKET	1	1	1	1		PURW
19	GP7–U7835–00	CHAIN BALL	1	1	1	1		
20	90169–049U1	TAPPING SCREW	1	1	1	1		
21	GP7–U7834–00	PACKING FUEL FILLER	1	1	1	1		
22	90267–329UR	RIVET, BLIND	1	1	1	1		
23	GP7–U783F–00	NUT, FUEL FILLER	1	1	1	1		
24	F1K–U7844–01	HOSE	1	1	1	1		
25	90601–155U4	BAND, HOSE 55	2	2	2	2		
26	EU0–67767–31	CHECK VALVE	1	1	1	1		
27	GP7–U785H–00	HOSE, AIR VENT 3	1	1	1	1		

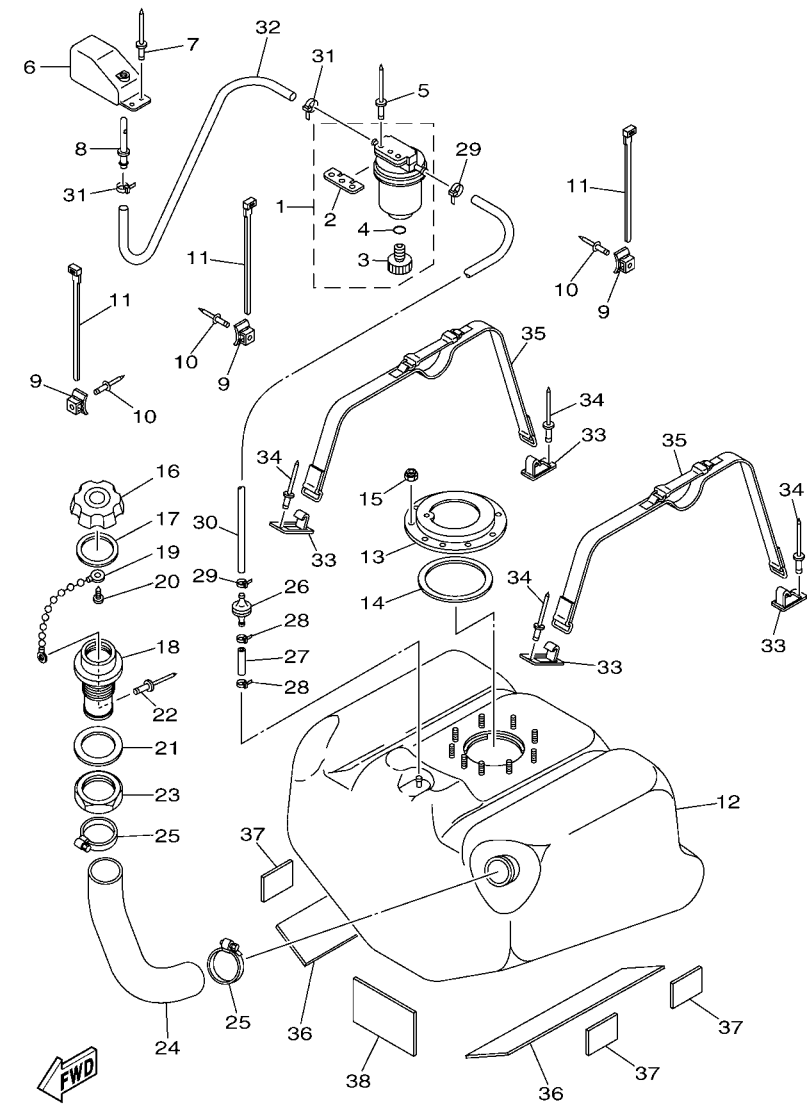

F1K7100-E250

FIG. 24 FUEL TANK

REF. NO.	PART NO.	DESCRIPTION	CAN	EUR	GENE	JPN		REMARKS
28	90465–11829	CLAMP	2	2	2	2		
29	90465–11829	CLAMP	2	2	2	2		
30	F1K–U785G–00	HOSE, AIR VENT	1	1	1	1		
31	90465–11829	CLAMP	2	2	2	2		
32	F0D–U7856–10	HOSE, AIR VENT 3	1	1	1	1		
33	F1K–U5772–02	HOOK A	4	4	4	4		
34	90267–489U1	RIVET,BLIND	4	4	4	4		
35	F1K–67743–00	BELT, TANK 1	2	2	2	2		
36	F1K–U759B–00	MAT 1	2	2	2	2		
37	F1W–U759C–01	MAT 2	4	4	4	4		
38	F1S–U8221–00	PAD, BATTERY	1	1	1	1		

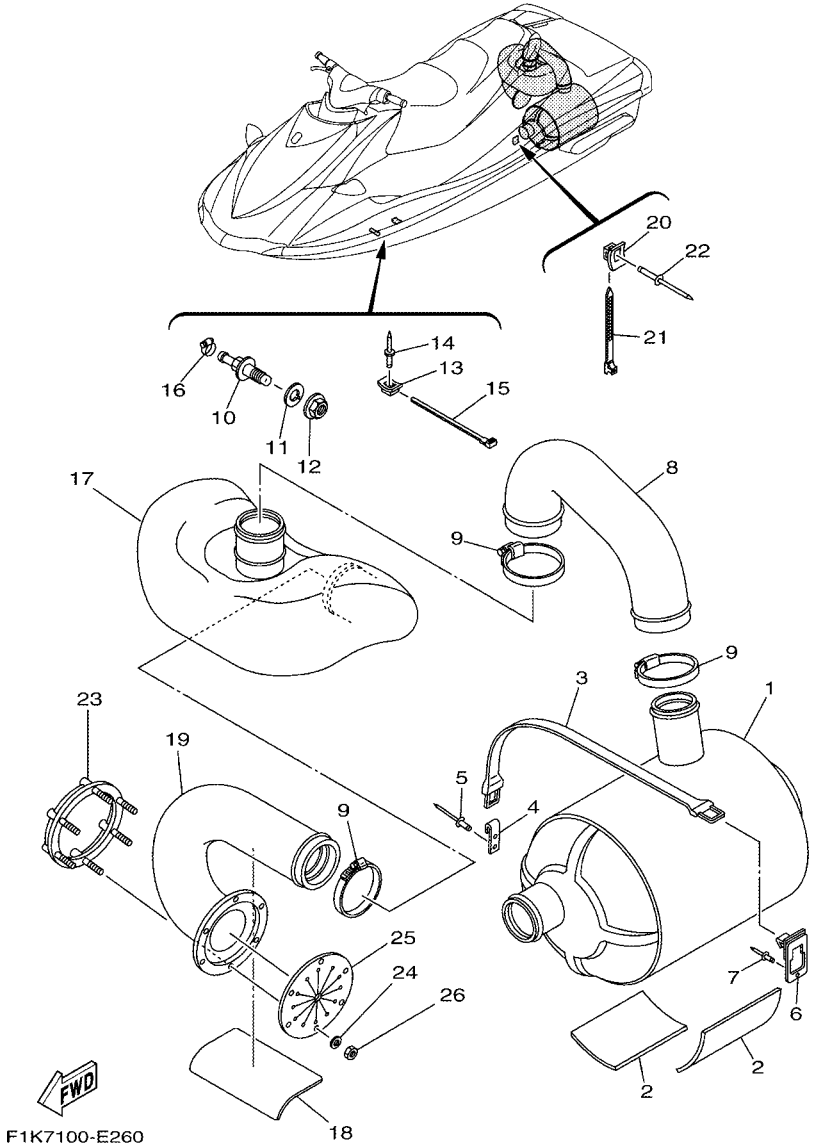

FIG. 25 EXHAUST 3

REF. NO.	PART NO.	DESCRIPTION	CAN	EUR	GENE	JPN		REMARKS
1	F1K–U7550–01	WATER LOCK COMP.	1	1	1	1		
2	F1S–U8221–00	PAD, BATTERY	2	2	2	2		
3	EW2–67821–00	BAND, FUEL TANK	1	1	1	1		
4	GA7–65772–00	HOOK A	1	1	1	1		
5	90267–489U1	RIVET,BLIND	2	2	2	2		
6	F1K–U5772–02	HOOK A	1	1	1	1		
7	90267–489U1	RIVET,BLIND	1	1	1	1		
8	F1K–U7555–00	HOSE, EXHAUST	1	1	1	1		
9	90601–175UR	BAND, HOSE 75	3	3	3	3		
10	F1K–6753B–00	PILOT, WATER	1	1	1	1		
11	F1B–67564–00	GASKET	1	1	1	1		
12	F0X–62733–00	NUT	1	1	1	1		
13	90600–91736	CLAMP COMP.	1	1	1	1		
14	90267–48802	RIVET, BLIND	1	1	1	1		
15	90464–32801	CLAMP	1	1	1	1		
16	90601–118UF	BAND, HOSE 18	1	1	1	1		
17	F1K–U4261–00	TANK, WATER	1	1	1	1		
18	F1S–U8221–00	PAD, BATTERY	1	1	1	1		
19	F1K–U758D–00	HOSE,EXHAUST 3	1	1	1	1		
20	90600–91736	CLAMP COMP.	1	1	1	1		
21	90464–32801	CLAMP	1	1	1	1		
22	90267–489U6	RIVET, BLIND	1	1	1	1		
23	F1S–U757B–00	PLATE	1	1	1	1		
24	9299R–06200	WASHER	6	6	6	6		
25	F1B–U751G–00	VALVE, EXHAUST	1	1	1	1		
26	9572R–06300	NUT, NYLON	6	6	6	6		

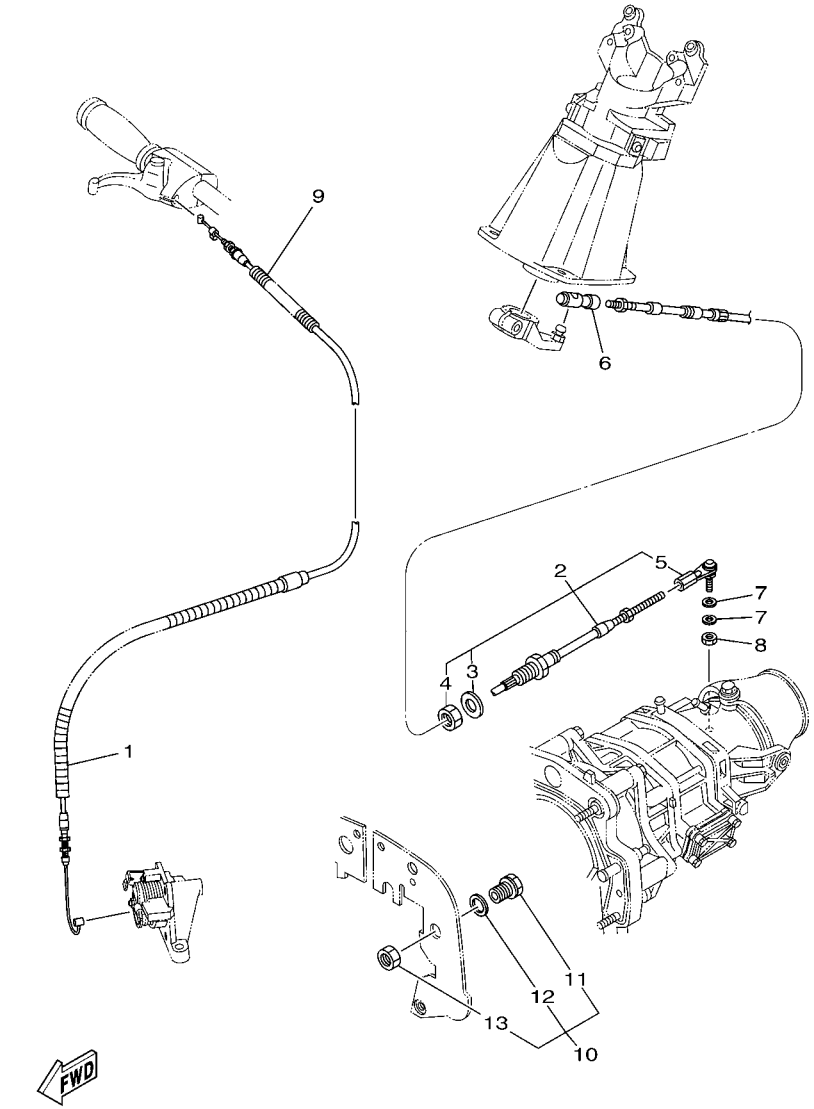

F2L8100-H260

FIG. 26 CONTROL CABLE

REF. NO.	PART NO.	DESCRIPTION	CAN	EUR	GENE	JPN		REMARKS
1	6D3–26311–02	CABLE, THROTTLE 1	1	1	1	1		
2	F1K–61481–01	CABLE, STEERING	1	1	1	1		
3	F1B–61438–00	.PACKING	1	1	1	1		
4	F1B–6151S–00	.NUT	1	1	1	1		
5	F1B–61461–02	.STUD, JOINT BALL	1	1	1	1		
6	GK5–U146F–00	SHAFT,JOINT BALL	1	1	1	1		
7	90201–06906	WASHER, PLATE	2	2	2	2		
8	9538R–06700	NUT	1	1	1	1		
9	90447–06803	TUBE	1	1	1	1		
10	F1K–67267–00	CONNECTOR, CABLE	1	1	1	1		
11	F1K–61436–00	.BODY	1	1	1	1		
12	F1B–61438–00	.PACKING	1	1	1	1		
13	F1B–6151S–00	.NUT	1	1	1	1		

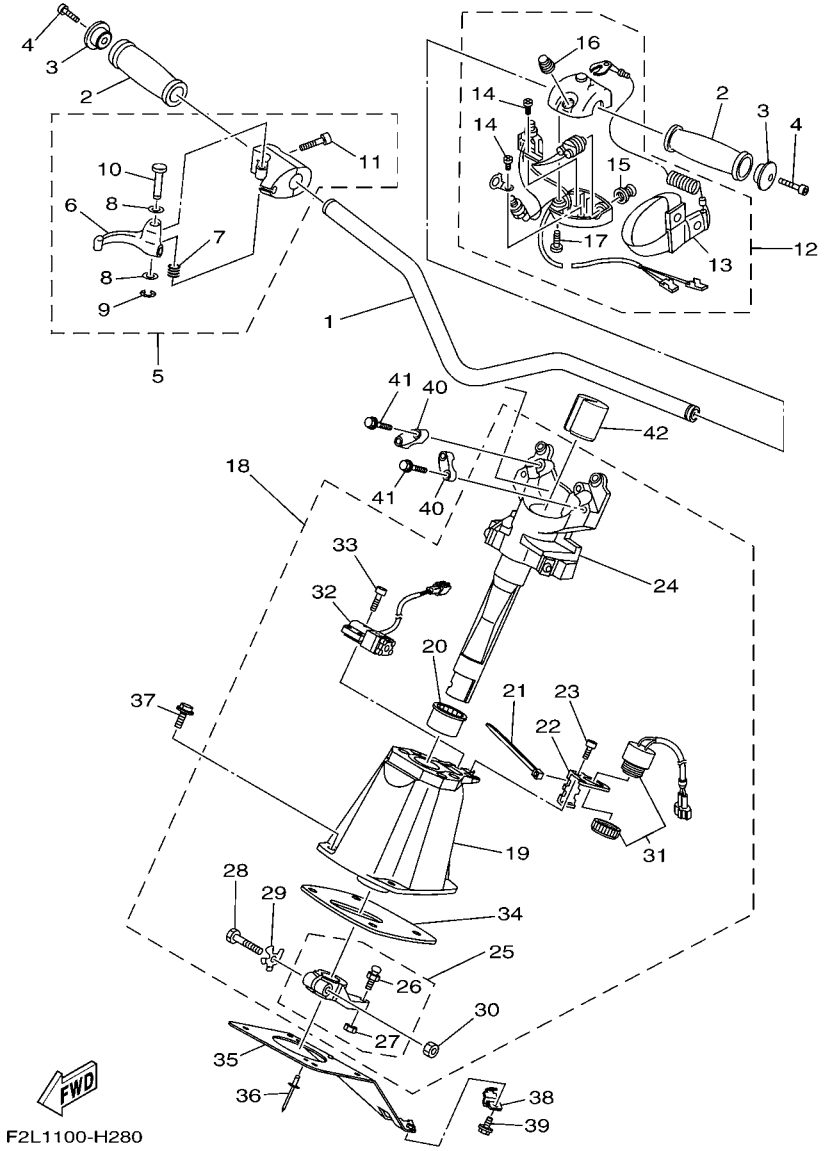

FIG. 27 STEERING 1

REF. NO.	PART NO.	DESCRIPTION	CAN	EUR	GENE	JPN		REMARKS
1	F1K–U1552–00	HANDLE	1	1	1	1		
2	GP7–U155D–01	GRIP, HANDLE	2	2	2	2		
3	GP7–U155F–00	GRIP, END	2	2	2	2		
4	90110–05908	BOLT, HEXAGON SOCKET HEAD	2	2	2	2		
5	F0D–67250–10	THROTTLE LEVER ASSY	1	1	1	1		
6	F0D–67255–02	.LEVER, THROTTLE	1	1	1	1		
7	EW2–67256–00	.SPRING	1	1	1	1		
8	EW2–67258–01	.WASHER	2	2	2	2		
9	EW2–67259–01	.E-RING	1	1	1	1		
10	F0D–67257–00	.SHAFT	1	1	1	1		
11	F1X–6725F–01	.BOLT, THROTTLE	2	2	2	2		
12	FK7–68310–07	SWITCH BOX ASSY	1	1	1	1		
13	EW2–68348–00	.LANYARD, STOP SWITCH	1	1	1	1		
14	97880–03008	.SCREW, PAN HEAD	2	2	2	2		
15	FK7–68312–02	.STOP BUTTON COMP	1	1	1	1		
16	FK7–68313–02	.START BUTTON COMP.	1	1	1	1		
17	97880–05025	.SCREW, PAN HEAD	2	2	2	2		
18	F1K–61400–01	STEERING MASTER ASSY	1	1	1	1		
19	F1K–6152M–00	.HOUSING ASSY	1	1	1	1		
20	F1K–6134M–00	.BUSH	1	1	1	1		
21	703–82591–00	.BAND	2	2	2	2		
22	F1K–6146H–10	.SPACER, BRKT.	1	1	1	1		
23	F1B–613C1–00	.SCREW	2	2	2	2		
24	F1K–67410–00	.SHAFT ASSY	1	1	1	1		
25	F1K–6153R–00	.ARM ASSY.	1	1	1	1		
26	EU0–61461–02	..STUD, JOINT BALL	1	1	1	1		
27	95720–06300	..NUT, SELF-LOCKING	1	1	1	1		

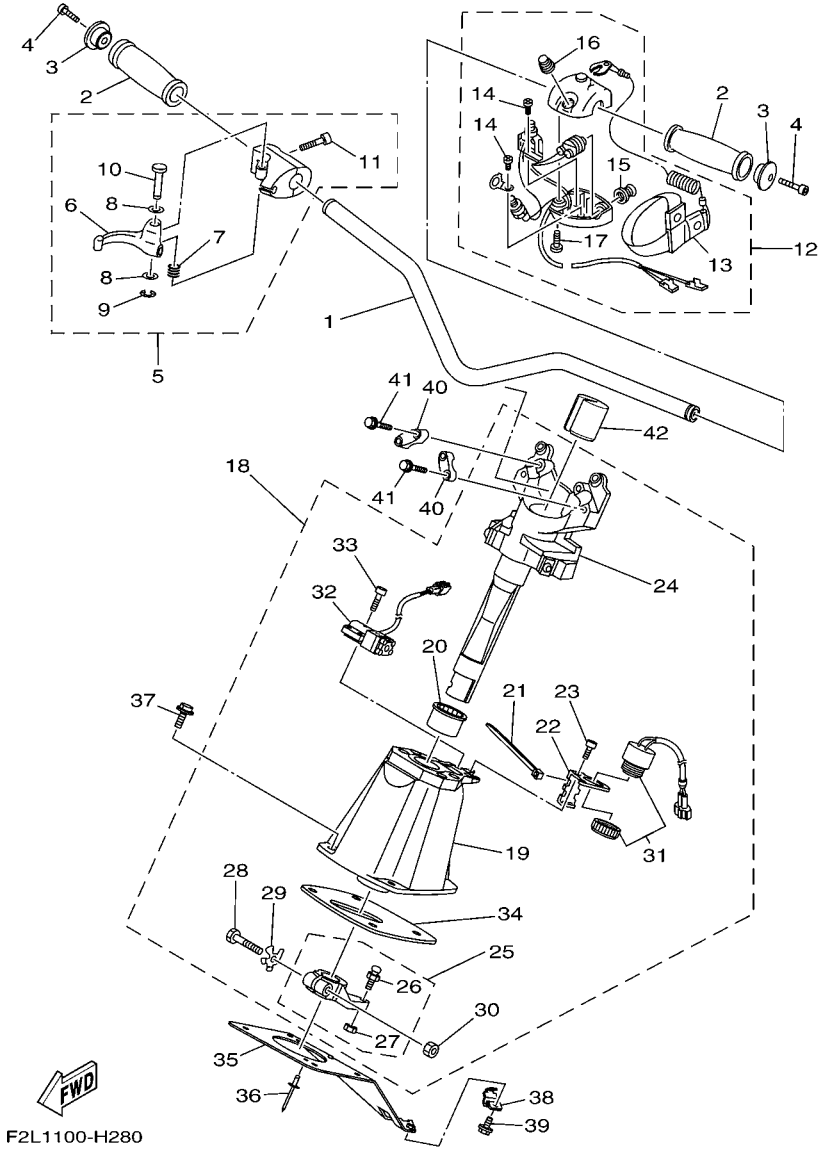

FIG. 27 STEERING 1

REF. NO.	PART NO.	DESCRIPTION	CAN	EUR	GENE	JPN		REMARKS
28	F1K–61355–00	.BOLT	1	1	1	1		
29	F1K–6142B–00	.PLATE, RETAINING	1	1	1	1		
30	95720–08300	.NUT, SELF-LOCKING	1	1	1	1		
31	F1S–68341–00	.BUZZER	1	1	1	1		
32	F1W–68303–00	.SENSOR ASSY	1	1	1	1		
33	F1W–61516–00	.BOLT	4	4	4	4		
34	F1K–6143C–00	.SEAL, RUBBER	1	1	1	1		
35	F1K–U1467–00	BRACKET,STOPPER CABLE	1	1	1	1		
36	90267–48806	RIVET, BLIND	2	2	2	2		
37	90119–08836	BOLT, WITH WASHER	4	4	4	4		
38	F1K–U1468–03	STOPPER, CABLE	1	1	1	1		
39	90119–069UH	BOLT, WITH WASHER	1	1	1	1		
40	EU0–23814–30	HOLDER, HANDLE UPPER	2	2	2	2		
41	90119–089UU	BOLT, WITH WASHER	4	4	4	4		
42	F1K–U1949–00	PLUG	1	1	1	1		

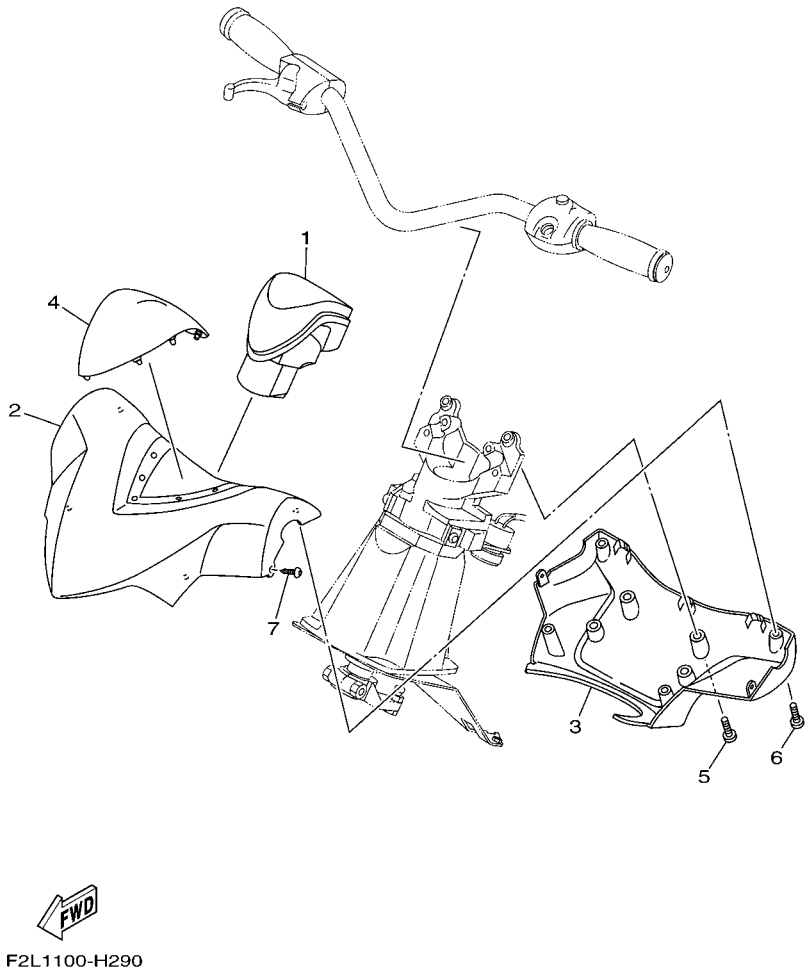

FIG. 28 STEERING 2

REF. NO.	PART NO.	DESCRIPTION	CAN	EUR	GENE	JPN		REMARKS
1	F1K–U156E–01	PAD 1	1	1	1	1		
2	F1K–U143D–01	PAD, STEERING 1	1	1	1	1		
3	F1K–U143E–01	PAD, STEERING 2	1	1	1	1		
4	F1K–U142D–00	COVER, PAD	1	1	1	1		
5	90154–06017	SCREW, BINDING	4	4	4	4		
6	90149–05903	SCREW	4	4	4	4		
7	90167–04003	SCREW, TAPPING	2	2	2	2		

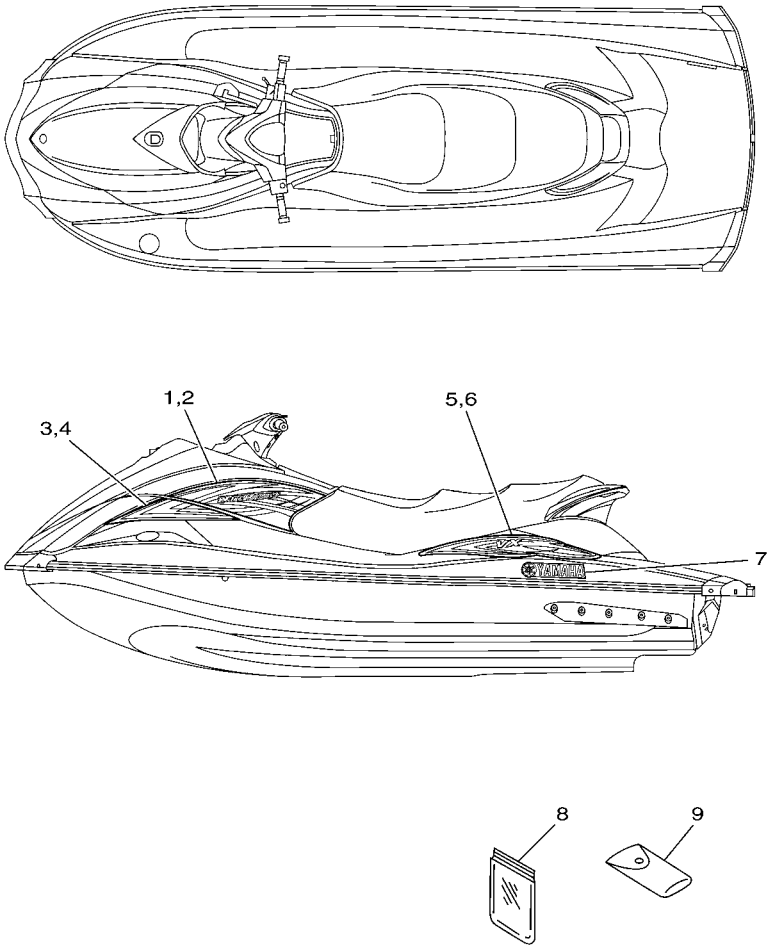

FIG. 29 GRAPHICS

REF. NO.	PART NO.	DESCRIPTION	CAN	EUR	GENE	JPN		REMARKS
1	F1K–U417F–F0	GRAPHIC, 5 (LH)	1	1	1	1		
2	F1K–U417G–F0	GRAPHIC, 6 (RH)	1	1	1	1		
3	F1K–U417H–F0	GRAPHIC, 7 (LH)	1	1	1	1		
4	F1K–U417J–F0	GRAPHIC 8 (RH)	1	1	1	1		
5	F1K–U417K–F0	GRAPHIC 9 (LH)	1	1	1	1		
6	F1K–U417L–F0	GRAPHIC, B (RH)	1	1	1	1		
7	F0V–U411C–10	EMBLEM, YAMAHA	2	2	2	2		
8	F1B–65986–00	TOOL SET	1	1	1	1		
9	EU0–65901–01	TOOL BAG	1	1	1	1		

FIG. 30 IMPORTANT LABELS

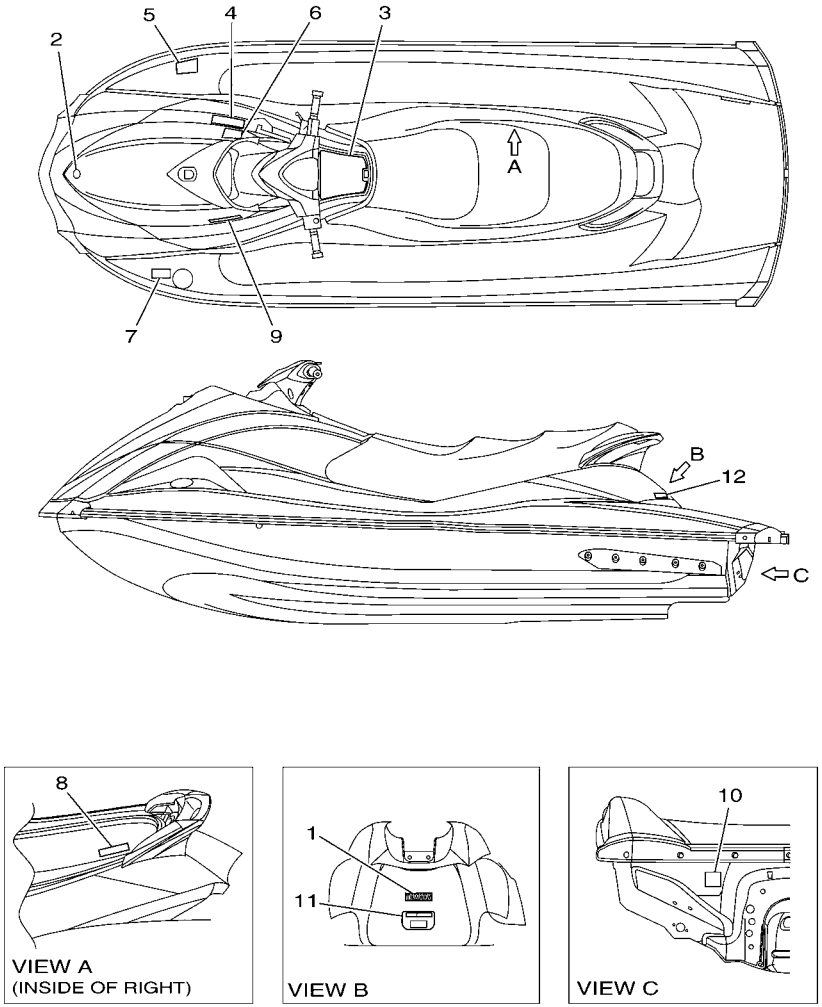

F1KF100-F311

REF. NO.	PART NO.	DESCRIPTION	CAN	EUR	GENE	JPN		REMARKS
1	F1B–U411C–02	EMBLEM, YAMAHA	1					
2	F1K–U411H–00	EMBLEM, TUNING FORK	1					
3	F1K–U41B1–11	LABEL, WARNING UNIFORM 1	1					
4	F1B–U41B1–21	LABEL, WARNING UNIFORM 1	1					
5	F0V–U41B1–31	LABEL, WARNING UNIFORM 1	1					
6	F1B–U41B2–01	LABEL, WARNING UNIFORM 2	1					
7	F1B–U415B–11	LABEL, WARNING(FUEL)	1					
8	F0V–U41DB–12	LABEL, WARNING BATTERY	1					
9	F1B–U41F5–21	LABEL, FIRE EXTINGUISHER 1	1					
10	GA9–U418F–00	LABEL, RIGHTING	1					
11	F0V–U41E1–41	LABEL, SET 1	1					
12	GJ3–U419E–00	LABEL 4	1					

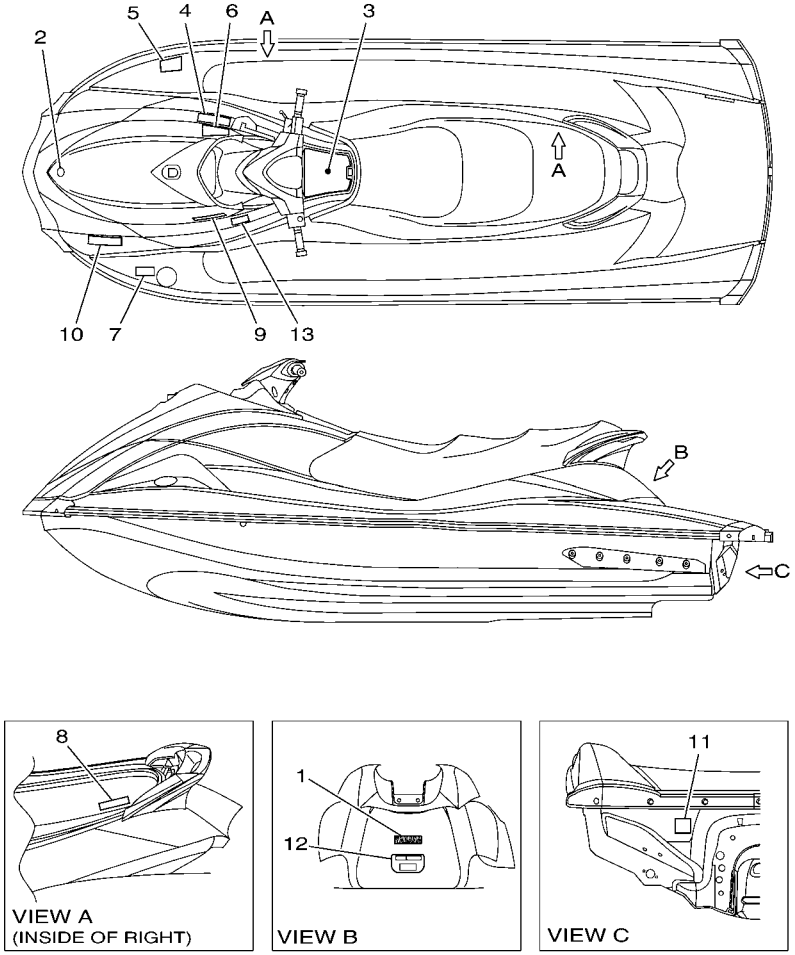

F1KU100-G320

FIG. 31 IMPORTANT LABELS 2

REF. NO.	PART NO.	DESCRIPTION	CAN	EUR	GENE	JPN		REMARKS
1	F1B–U411C–02	EMBLEM, YAMAHA		1	1			
2	F1K–U411H–00	EMBLEM, TUNING FORK		1	1			
3	F1K–U41B1–11	LABEL, WARNING UNIFORM 1		1	1			
4	F1B–U41B1–21	LABEL, WARNING UNIFORM 1		1	1			
5	F0V–U41B1–31	LABEL, WARNING UNIFORM 1		1	1			
6	F1B–U41B2–01	LABEL, WARNING UNIFORM 2		1	1			
7	F1B–U415B–11	LABEL, WARNING(FUEL)		1	1			
8	F0V–U41DB–02	LABEL, WARNING BATTERY		1				FOR EUR
	F0V–U41DB–12	LABEL, WARNING BATTERY			1			FOR GENE
9	F1B–U41F5–21	LABEL, FIRE EXTINGUISHER 1		1	1			
10	GJ3–U416H–01	LABEL,WARNING(FRANCE)		1				FOR EUR
11	GA9–U418F–00	LABEL, RIGHTING		1	1			
12	F0V–U41E1–41	LABEL, SET 1		1	1			
13	F1X–U413P–02	LABEL, BUILDERS PLATE		1				FOR EUR

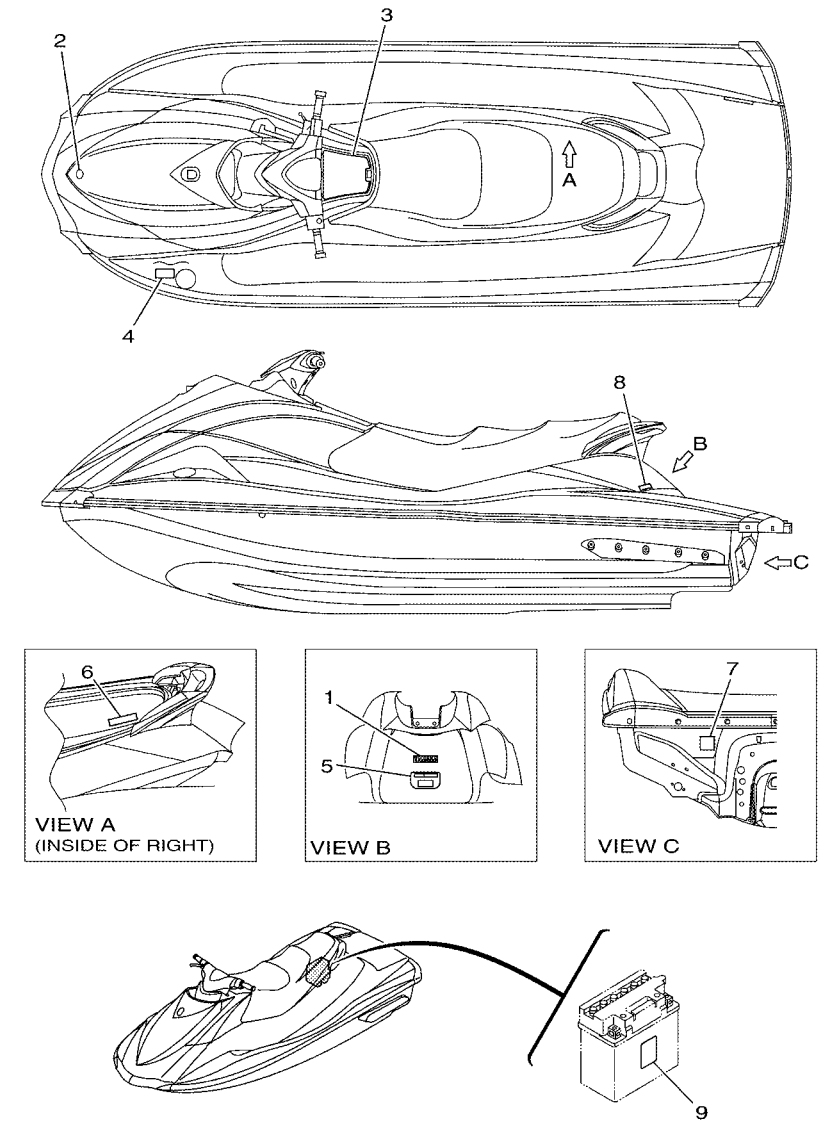

FIG. 32 IMPORTANT LABELS 3

REF. NO.	PART NO.	DESCRIPTION	CAN	EUR	GENE	JPN		REMARKS
1	F1B–U411C–02	EMBLEM, YAMAHA				1		
2	F1K–U411H–00	EMBLEM, TUNING FORK				1		
3	F1K–641B1–22	LABEL, WARNING UNIFORM 1				1		
4	F1B–6415B–20	LABEL, WARNING(FUEL)				1		
5	F1F–641E2–20	LABEL, SET 2				1		
6	F0V–641DB–20	LABEL, WARNING BATTERY				1		
7	GA9–U418F–00	LABEL, RIGHTING				1		
8	F0P–U41G1–01	LABEL, CAPACITY				1		
9	F0V–U412G–10	LABEL, BATTERY				1		

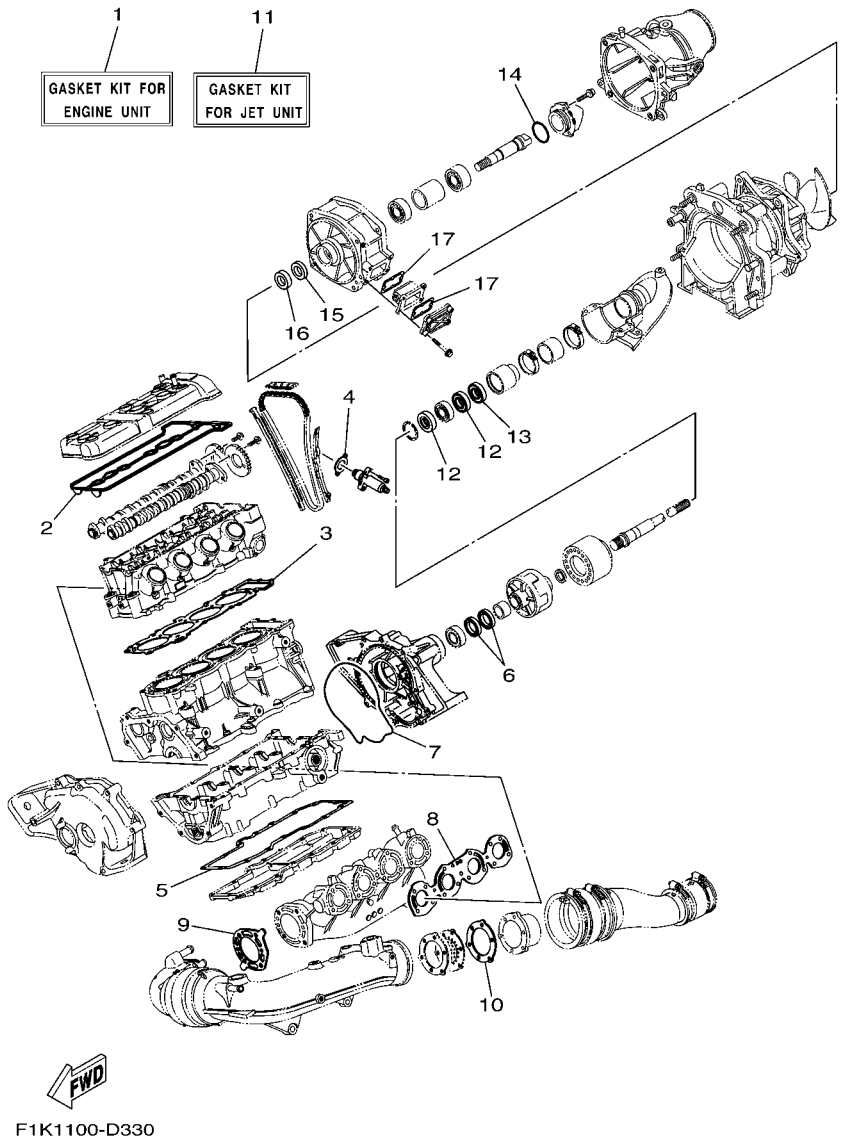

FIG. 33 REPAIR KIT 1

REF. NO.	PART NO.	DESCRIPTION	CAN	EUR	GENE	JPN		REMARKS
1	6D3–W0001–00	GASKET KIT FOR ENGINE UNIT	1	1	1	1		
2	60E–11193–01	.GASKET, HEAD COVER 1	1	1	1	1		
3	6D3–11181–00	.GASKET, CYLINDER HEAD 1	1	1	1	1		
4	4FM–12213–00	.GASKET, TENSIONER CASE	1	1	1	1		
5	6B6–13557–01	.GASKET	1	1	1	1		
6	93101–35004	.OIL SEAL	2	2	2	2		
7	6B6–13475–01	.GASKET	1	1	1	1		
8	6D3–14613–00	.GASKET, EXHAUST PIPE	1	1	1	1		
9	6D3–14739–00	.GASKET, MUFFLER DAMPER 1	1	1	1	1		
10	60E–14623–00	.GASKET, EXHAUST PIPE	2	2	2	2		
11	6D3–W0001–20	GASKET KIT FOR JET UNIT	1	1	1	1		
12	93101–25M55	.OIL SEAL	2	2	2	2		
13	93101–25M56	.OIL SEAL	1	1	1	1		
14	93210–464A3	.O-RING	1	1	1	1		
15	93101–21002	.OIL SEAL	1	1	1	1		
16	93101–21001	.OIL SEAL	1	1	1	1		
17	66V–42414–00	.O-RING	2	2	2	2		

PART NO.	REF. NO.
6D3–11102–00–94	1 – 2
4KG–1111G–00	1 – 21
6D3–11125–00	7 – 30
6D3–11126–00	7 – 25
3TJ–11133–10	1 – 3
1WG–11133–11	1 – 4
6D3–11164–00	7 – 21
6D3–11165–00	8 – 19
6D3–11166–00	7 – 32
6D3–11167–00	8 – 31
6D3–11181–00	1 – 22
	33 – 3
6D3–1118A–00	1 – 18
6D3–11191–01–94	1 – 17
60E–11193–01	1 – 19
	33 – 2
69J–11301–00	2 – 11
69J–11301–10	2 – 11
6E5–11325–00	8 – 12
67F–11325–01	2 – 12
68V–11325–02	2 – 12
67F–11328–00	2 – 13
60E–11372–10	9 – 5
60E–11411–11	3 – 1
6D3–11416–00	3 – 2
6D3–11416–10	3 – 2
6D3–11416–20	3 – 2
6D3–11416–30	3 – 2
6D3–11416–A0	3 – 2
6B6–11478–00	3 – 15
6D3–11603–00	3 – 4
6D3–11631–00–B0	3 – 3
4XV–11633–00	3 – 5
6D3–11650–00	3 – 7
5JW–11654–00	3 – 8
60E–11656–00	3 – 10
60E–11656–10	3 – 10
60E–11656–20	3 – 10
60E–11656–30	3 – 10
4XV–12111–00	4 – 5
4XV–12112–00	4 – 6
4XV–12113–00	4 – 10
4XV–12114–00	4 – 11
1HX–12116–01	4 – 8
1HX–12117–00	4 – 12
1WG–12117–00	4 – 13
1HX–12118–00	4 – 14
1WG–12118–00	4 – 15

PART NO.	REF. NO.
4SV–12119–00	4 – 17
4TV–12119–00	4 – 16
5LV–12121–00	4 – 7
3GM–12126–00	4 – 9
3FV–12153–10	4 – 20
3LN–12153–10	4 – 19
1HX–12168–00	4 – 18
1HX–12168–20	4 – 18
1HX–12168–40	4 – 18
1HX–12168–60	4 – 18
1HX–12168–80	4 – 18
1HX–12168–A0	4 – 18
1HX–12168–F0	4 – 18
1HX–12168–H1	4 – 18
1HX–12168–K1	4 – 18
1HX–12168–M1	4 – 18
1HX–12168–R1	4 – 18
1HX–12168–U1	4 – 18
1HX–12168–W1	4 – 18
1HX–12168–Y1	4 – 18
1HX–12169–11	4 – 18
1HX–12169–31	4 – 18
1HX–12169–50	4 – 18
1HX–12169–70	4 – 18
1HX–12169–90	4 – 18
1HX–12169–E0	4 – 18
1HX–12169–G0	4 – 18
1HX–12169–J0	4 – 18
1HX–12169–L0	4 – 18
1HX–12169–N0	4 – 18
1HX–12169–T0	4 – 18
6D3–12171–11	4 – 1
6D3–12176–00	4 – 3
6D3–12181–00	4 – 2
6D3–12210–00	4 – 23
4FM–12213–00	4 – 24
	33 – 4
5BE–12241–00	4 – 22
6D3–12251–00	4 – 26
4XV–12252–00	4 – 27
6D3–12411–00	10 – 31
60E–12413–10–94	10 – 33
60E–12417–10–94	10 – 30
60E–12435–00	10 – 39
6D3–1243A–10	10 – 10
6D3–1243E–10	10 – 15
6D3–12446–00	10 – 35
6D3–1244G–10	10 – 26

PART NO.	REF. NO.
6D3–1244H–10	10 – 19
60E–12474–00	1 – 32
6D3–12482–00	1 – 27
60E–12483–10	1 – 31
60E–12494–00	1 – 30
6D3–12494–00	10 – 36
60E–12495–00	1 – 36
6B6–12499–00	10 – 43
60E–12537–00	1 – 33
6D3–12577–10	10 – 23
63M–12580–00	10 – 5
60E–12581–00	10 – 3
60E–12584–00	10 – 14
6D3–12584–00	10 – 18
6D3–12880–00	6 – 4
6B6–1310A–00–94	2 – 17
6B6–13151–00–94	8 – 27
60E–13161–00	2 – 21
6D3–13300–10	7 – 2
6B6–13317–00	8 – 5
6B6–13327–01–94	7 – 8
6B6–13360–00	7 – 1
6B6–13411–00	7 – 11
60E–13421–00	8 – 7
5GH–13440–20	2 – 26
6D3–13443–00–94	8 – 22
60E–13446–00	8 – 1
6D3–13462–00–94	8 – 3
6D3–13463–00–94	8 – 14
60E–13473–00	8 – 18
60E–13475–00	8 – 15
6B6–13475–01	7 – 13
	33 – 7
60E–13476–10	8 – 23
6D3–13477–00	8 – 20
6B6–13557–01	2 – 19
	33 – 5
6B6–13563–01	7 – 3
68V–13573–00	6 – 5
6D3–13641–00	6 – 2
6D3–13750–00	6 – 1
60E–13761–10	6 – 13
6D3–13795–01	6 – 16
60E–13907–02	17 – 1
60E–14147–00	6 – 14
6D3–14294–00	6 – 10
6D3–14305–21	16 – 1
6D3–14411–00	5 – 1

PART NO.	REF. NO.
6D3–14413–00	6 – 18
6D3–14414–00	6 – 19
6D3–14419–01	5 – 8
6D3–14421–02	5 – 3
6D3–14437–00	5 – 7
63P–14446–00	6 – 7
60E–14449–00–94	6 – 20
6D3–14451–00	5 – 4
4XV–14452–00	5 – 2
6D3–14457–00	6 – 3
68V–14475–00	6 – 6
6D3–14495–00	5 – 13
6D3–14613–00	9 – 3
	33 – 8
6D3–14615–00	9 – 14
60E–14623–00	9 – 24
	33 – 10
6D3–14625–00	9 – 16
6D3–1469W–00	9 – 26
6D3–14711–00–94	9 – 4
6D3–14712–00–94	9 – 9
6D3–14721–00–94	9 – 18
6D3–14739–00	9 – 10
	33 – 9
6D3–14752–00–94	9 – 28
6B6–1475E–00	9 – 29
6D3–1475F–00	9 – 30
60E–14784–00–94	9 – 25
6D3–15100–00–94	2 – 1
60E–15362–00	8 – 17
6D3–15515–00	13 – 1
60E–15517–00	13 – 2
60E–15521–00	13 – 3
4WM–15590–00	13 – 4
6D3–17572–00	3 – 11
6B6–17585–00	3 – 18
6B6–17586–00	3 – 19
EU0–23814–30	27 – 40
60E–24300–01	6 – 12
6D3–24387–00	17 – 6
60E–24474–00	17 – 4
6D3–24481–00	17 – 5
70R–24489–00	24 – 4
70R–24543–00	24 – 3
6D3–26311–02	26 – 1
67F–2812A–00	15 – 19
66V–42414–00	11 – 10
	33 – 17

PART NO.	REF. NO.
67X–44517–10–94	2 – 28
6D3–44574–00	2 – 29
66V–45214–00–94	11 – 11
6D3–45235–00	12 – 3
6D3–45332–00–94	12 – 2
6D3–45511–00	11 – 19
6D3–45514–00	11 – 16
65V–45538–00	11 – 14
6D3–45593–00–94	12 – 8
6D3–45813–00–94	3 – 12
6D3–4581J–00	12 – 1
66V–46882–00	11 – 9
61X–51162–00	20 – 2
66V–51312–01–94	11 – 5
6B6–51315–01–94	11 – 8
6B6–51326–10	11 – 20
60E–51341–00–94	8 – 33
F1K–6134M–00	27 – 20
F1K–61355–00	27 – 28
F1B–613C1–00	27 – 23
F1K–61400–01	27 – 18
F1K–6142B–00	27 – 29
F1K–61436–00	26 – 11
F1B–61438–00	26 – 3
	26 – 12
F1K–6143C–00	27 – 34
EU0–61461–02	27 – 26
F1B–61461–02	26 – 5
F1K–6146H–10	27 – 22
F1K–61481–01	26 – 2
F1W–61516–00	27 – 33
F1B–6151S–00	26 – 4
	26 – 13
F1K–6152M–00	27 – 19
F1K–6153R–00	27 – 25
F0X–61624–00	20 – 20
F1K–61628–00	20 – 16
	23 – 13
F0X–61637–00	20 – 23
EU0–61652–00	10 – 9
	20 – 6
F0X–61652–00	20 – 24
EW2–62142–00	24 – 2
F1G–62149–00	24 – 8
F2F–6214A–00	24 – 1
GP7–62159–02	24 – 6
GJ3–6215F–00	17 – 15
EU0–62241–30	17 – 22

PART NO.	REF. NO.
FN8–6269B–00	20 – 5
F0X–62733–00	25 – 12
GU2–62875–01	18 – 11
F1B–6415B–20	32 – 4
F1K–641B1–22	32 – 3
F0V–641DB–20	32 – 6
F1F–641E2–20	32 – 5
F1K–6517C–00	19 – 6
F0X–6517R–01	18 – 10
GA7–65772–00	25 – 4
EU0–65901–01	29 – 9
F1B–65986–00	29 – 8
F0D–67250–10	27 – 5
F0D–67255–02	27 – 6
EW2–67256–00	27 – 7
F0D–67257–00	27 – 10
EW2–67258–01	27 – 8
EW2–67259–01	27 – 9
F1X–6725F–01	27 – 11
F1K–67267–00	26 – 10
F1K–67410–00	27 – 24
F1K–6753B–00	25 – 10
F1B–67564–00	25 – 11
F1K–67743–00	24 – 35
F1B–67747–00	24 – 14
EU0–67767–31	24 – 26
EW2–67821–00	25 – 3
F1K–6820A–11	17 – 17
GU2–6822E–01	17 – 19
60E–682E0–00	17 – 2
F1W–68303–00	27 – 32
FK7–68310–07	27 – 12
FK7–68312–02	27 – 15
FK7–68313–02	27 – 16
F1S–68341–00	27 – 31
EW2–68348–00	27 – 13
6D3–81147–00	6 – 8
60E–81315–00	16 – 16
60E–81328–00	13 – 18
66V–8132W–00	15 – 17
6D3–81337–00–94	13 – 13
6D3–81410–01	13 – 7
6D3–81450–00	13 – 6
6D3–81800–00	14 – 1
3AJ–81809–00	14 – 6
60E–81810–00	14 – 10
6D3–81820–00	14 – 9
6M6–81826–00	14 – 4

PART NO.	REF. NO.
6M6–81830–00	14 – 2
6M6–81840–10	14 – 8
11H–81844–00	14 – 5
66V–81844–00	15 – 18
6D3–81845–00	13 – 21
1FK–81847–00	14 – 3
6M6–81850–00	14 – 7
6D3–81921–00	15 – 8
6B6–81940–00	15 – 15
60E–81950–00	15 – 13
68V–81950–00	15 – 14
6D3–81960–00	15 – 24
EU0–82110–09	17 – 7
6D3–82115–00	15 – 5
6D3–82116–00	15 – 31
6D3–82117–00	15 – 6
67F–82151–00	15 – 9
67F–82151–10	15 – 10
67F–82151–30	15 – 11
67F–82151–40	15 – 12
6D3–82157–00	15 – 7
6D3–82170–00	15 – 4
6D3–82310–00	16 – 3
6A0–82317–00	7 – 22
	15 – 22
68V–82504–00	16 – 15
60E–82532–00	16 – 17
60E–82556–00	17 – 3
6D3–82560–01	16 – 11
60E–82560–A1	16 – 8
703–82591–00	27 – 21
60E–8259E–00	15 – 16
6D3–8259L–04	15 – 32
6D3–8273J–01	16 – 18
6B6–83623–00	8 – 25
60E–83627–00	8 – 26
68F–83688–00	6 – 9
682–84385–01	10 – 8
6D3–85132–00	1 – 25
61A–85790–00	16 – 6
6D3–85896–00	16 – 13
6D3–8591A–11	15 – 20
6D3–8591A–21	15 – 20
6D3–85991–01	15 – 26
67X–E2590–10	10 – 51
6D3–G5831–00	11 – 2
6D3–R1313–00	11 – 33
6D3–R1318–00	11 – 25

PART NO.	REF. NO.
6D3–R1319–00	11 – 23
6D3–R1321–02	11 – 24
6D3–R1333–00–94	11 – 1
6D3–R1341–00	11 – 32
60E–R1381–01	12 – 12
F1K–U135C–00	19 – 11
F1K–U142D–00	28 – 4
F1K–U143D–01	28 – 2
F1K–U143E–01	28 – 3
F1K–U1467–00	27 – 35
F1K–U1468–03	27 – 38
GK5–U146F–00	26 – 6
F1K–U1552–00	27 – 1
GP7–U155D–01	27 – 2
GP7–U155F–00	27 – 3
F1K–U156E–01	28 – 1
F1B–U1653–01	20 – 19
F1K–U1949–00	27 – 42
F1K–U2103–00	19 – 2
F1K–U2127–00	22 – 1
F1K–U213G–00	22 – 2
F1K–U2155–00	12 – 15
F1K–U2187–00	22 – 10
F1K–U2188–00	22 – 11
F1S–U2280–00	20 – 31
F1S–U2285–00	20 – 32
F1K–U2501–02	21 – 1
F1K–U2512–03	21 – 7
F1K–U2519–11	21 – 8
F1K–U251D–01	21 – 10
F1K–U251E–01	21 – 11
F1K–U2521–02	21 – 2
F1K–U2663–00	19 – 4
F1K–U2664–01	23 – 3
F1K–U266B–00	19 – 5
F1K–U266C–00	18 – 4
F1K–U271B–04	23 – 9
F1K–U2723–00	18 – 2
F1K–U273B–04	11 – 36
F1K–U283B–02	19 – 14
F1K–U351H–10	21 – 14
F1K–U351J–10	21 – 15
F1K–U351K–10	21 – 16
F1K–U351M–10	21 – 17
F1K–U3581–10	21 – 13
F1K–U371A–12	23 – 1
F1K–U371B–10	23 – 2
F1K–U3774–00	23 – 16

PART NO.	REF. NO.
F1K–U378C–00	23 – 6
F1B–U3850–02	23 – 4
F1B–U411C–02	30 – 1
	31 – 1
	32 – 1
F0V–U411C–10	29 – 7
F1K–U411H–00	30 – 2
	31 – 2
	32 – 2
F0V–U412G–10	32 – 9
F1X–U413P–02	31 – 13
F1B–U415B–11	30 – 7
	31 – 7
GJ3–U416H–01	31 – 10
F1K–U417F–F0	29 – 1
F1K–U417G–F0	29 – 2
F1K–U417H–F0	29 – 3
F1K–U417J–F0	29 – 4
F1K–U417K–F0	29 – 5
F1K–U417L–F0	29 – 6
GA9–U418F–00	30 – 10
	31 – 11
	32 – 7
GJ3–U419E–00	30 – 12
F1K–U41B1–11	30 – 3
	31 – 3
F1B–U41B1–21	30 – 4
	31 – 4
F0V–U41B1–31	30 – 5
	31 – 5
F1B–U41B2–01	30 – 6
	31 – 6
F0V–U41DB–02	31 – 8
F0V–U41DB–12	30 – 8
	31 – 8
F0V–U41E1–41	30 – 11
	31 – 12
F1B–U41F5–21	30 – 9
	31 – 9
F0P–U41G1–01	32 – 8
F1K–U4261–00	25 – 17
F1K–U471E–03	19 – 13
F1K–U475F–01	19 – 21
F1W–U491K–00	21 – 3
GP7–U4953–10	20 – 18
	23 – 14
F1K–U515A–00	19 – 8
F1K–U516N–11–P0	18 – 1

PART NO.	REF. NO.
F1K–U517B–10–P0	19 – 1
F1K–U517D–05	19 – 10
F1K–U517F–01	19 – 19
F1K–U517H–01	18 – 9
F1K–U517R–00	19 – 12
F1K–U518E–04	19 – 9
F1K–U519D–00	18 – 13
F1K–U5772–02	17 – 10
	24 – 33
	25 – 6
F1K–U5983–01	19 – 24
EU0–U7354–00–01	2 – 34
EU0–U7354–00–03	2 – 34
EU0–U7354–00–05	2 – 34
EU0–U7354–00–10	2 – 34
EU0–U7354–00–20	2 – 34
F1B–U751G–00	25 – 25
F1K–U7550–01	25 – 1
F1K–U7555–00	25 – 8
F1K–U7557–00	11 – 42
F1S–U757B–00	25 – 23
F1K–U757E–01	11 – 46
F1K–U757F–01	11 – 47
F1K–U758D–00	25 – 19
F1K–U759B–00	24 – 36
F1K–U759C–00	19 – 23
F1W–U759C–01	24 – 37
F1B–U761D–02	20 – 8
F1K–U7711–02	24 – 12
F1B–U7773–00	24 – 13
GP7–U7831–01	24 – 16
GP7–U7832–01	24 – 17
GP7–U7833–00	24 – 18
GP7–U7834–00	24 – 21
GP7–U7835–00	24 – 19
GP7–U783F–00	24 – 23
F1K–U7844–01	24 – 24
F0D–U7856–10	24 – 32
F1K–U785G–00	24 – 30
F0D–U785G–10	17 – 13
GP7–U785H–00	24 – 27
F1K–U815D–00	15 – 1
F1K–U8169–00	20 – 30
F1K–U8211–01	17 – 9
F1K–U821D–00	17 – 12
F1K–U8221–00	17 – 8
F1S–U8221–00	24 – 38
	25 – 2

PART NO.	REF. NO.
F1S–U8221–00	25 – 18
F1K–U828K–00	19 – 25
F1G–U8572–01	11 – 38
F1K–U8572–02	5 – 14
F1K–U8577–00	11 – 39
F1K–U883B–00	12 – 18
F1K–U883E–00	12 – 13
F1S–U883N–01	20 – 26
F1S–U883P–01	20 – 27
F1X–U883T–00	20 – 28
F1S–U8K31–02	17 – 21
6D3–W0001–00	33 – 1
6D3–W0001–20	33 – 11
6D3–W009A–10–94	1 – 1
6D3–W009B–10–94	2 – 3
90101–069U0	11 – 50
90105–06026	1 – 9
90105–06033	2 – 9
90105–06035	10 – 34
	10 – 40
	10 – 42
90105–06036	8 – 16
90105–06054	10 – 41
90105–06790	9 – 27
90105–06826	19 – 15
90105–06M07	2 – 14
	8 – 24
90105–06M17	2 – 10
90105–07004	4 – 4
90105–08860	20 – 29
90105–093A5	2 – 5
90105–105A6	13 – 10
90109–06051	2 – 8
90109–066F0	1 – 20
90109–06832	12 – 14
90109–06M92	2 – 30
90109–08041	11 – 43
90110–05908	27 – 4
90110–06040	20 – 25
90110–06822	11 – 22
90110–08041	7 – 6
90110–08212	13 – 5
90111–05008	17 – 18
90111–06803	21 – 4
90116–10016	8 – 29
90116–10619	2 – 4
90119–06048	16 – 20
90119–06800	11 – 12

PART NO.	REF. NO.
90119–06820	23 – 10
90119–06827	11 – 49
90119–06835	11 – 6
90119–06882	18 – 8
90119–069UD	12 – 10
90119–069UH	19 – 18
	19 – 20
	27 – 39
90119–069UK	11 – 40
90119–069UP	23 – 5
90119–06M35	15 – 21
	15 – 25
90119–06M65	7 – 24
90119–08031	9 – 13
90119–08034	7 – 15
90119–08036	9 – 7
	9 – 12
90119–08043	7 – 16
90119–08045	7 – 14
90119–08050	6 – 21
90119–08074	6 – 22
90119–08075	9 – 8
90119–08085	7 – 7
90119–08823	2 – 32
	11 – 37
90119–08836	27 – 37
90119–08840	11 – 34
90119–089U7	11 – 52
90119–089UR	2 – 31
90119–089UU	12 – 16
	27 – 41
90119–08M22	5 – 11
	15 – 29
90119–10011	9 – 21
90119–10013	9 – 23
90119–10016	13 – 14
90119–10017	9 – 22
90119–10020	8 – 4
90119–10804	23 – 17
90119–10805	11 – 41
90119–10836	11 – 4
90119–10837	11 – 31
90119–10M02	8 – 28
90119–10M19	13 – 15
90149–05903	28 – 6
90150–05807	17 – 23
90154–06017	28 – 5
90159–05013	5 – 5

PART NO.	REF. NO.
90159–05014	5 – 6
90159–059U2	19 – 7
90167–04003	28 – 7
90169–049U1	24 – 20
90169–059U1	21 – 9
90176–10001	1 – 16
	8 – 30
90179–08327	3 – 9
90179–10006	1 – 14
90179–10414	1 – 15
90183–06902	18 – 7
90201–06906	26 – 7
90201–096J9	2 – 6
90201–099U3	2 – 33
	15 – 2
	23 – 7
90201–10013	1 – 12
90201–10019	1 – 13
90201–103U7	13 – 11
90201–248M5	12 – 9
90209–25008	3 – 20
90267–329UR	24 – 22
90267–47801	21 – 12
90267–48802	17 – 25
	17 – 32
	22 – 4
	24 – 10
	25 – 14
90267–48806	22 – 12
	27 – 36
90267–48809	19 – 3
90267–489U1	17 – 11
	24 – 34
	25 – 5
	25 – 7
90267–489U2	24 – 5
90267–489U6	17 – 30
	22 – 9
	24 – 7
	25 – 22
90267–489U8	20 – 11
90269–08801	19 – 22
90269–09805	18 – 3
90280–03047	13 – 12
90340–27001	1 – 7
90387–06080	11 – 48
90387–06083	10 – 44
90387–06119	7 – 23

PART NO.	REF. NO.
90387–06119	15 – 23
90387–06M05	8 – 10
90387–06M60	12 – 11
90387–08M06	11 – 35
90387–08M37	15 – 27
90387–11002	9 – 20
90401–20007	2 – 27
90430–06014	1 – 11
90430–06M03	2 – 15
90430–09002	6 – 15
90430–12002	11 – 45
90445–14008	11 – 28
90445–16005	9 – 1
90445–16006	11 – 26
90445–18M03	10 – 21
90445–20805	20 – 1
90445–21004	10 – 45
90445–21805	10 – 1
90445–22003	10 – 28
90445–25004	10 – 38
90445–26004	10 – 28
90446–14M23	16 – 10
90446–20MF5	11 – 29
90446–24M79	10 – 7
90446–27M55	20 – 3
90447–06803	26 – 9
90447–22001	10 – 16
90447–22004	10 – 2
	10 – 11
90447–22005	10 – 32
	10 – 46
90450–17M17	6 – 11
90450–57006	6 – 17
90450–90001	9 – 17
90450–94001	9 – 32
	9 – 34
90450–99004	9 – 31
	9 – 33
90450–99005	9 – 15
90464–12089	5 – 10
90464–18006	7 – 29
90464–21001	7 – 28
	7 – 34
90464–31001	1 – 24
	10 – 48
90464–32801	17 – 20
	17 – 26
	17 – 28

PART NO.	REF. NO.
90464–32801	17 – 33
	20 – 10
	22 – 8
	24 – 11
	25 – 15
	25 – 21
90464–35132	10 – 49
	10 – 50
	15 – 30
90464–38800	5 – 17
90464–40825	5 – 18
90464–99804	22 – 5
90465–11829	11 – 30
	17 – 16
	24 – 28
	24 – 29
	24 – 31
90465–12M53	8 – 9
90465–13M18	16 – 21
90467–089U1	17 – 14
90467–110A1	7 – 31
90467–120A0	10 – 37
90467–150A0	10 – 6
90467–160A0	9 – 2
	10 – 20
	10 – 22
	10 – 27
90467–170A0	7 – 26
	7 – 27
	7 – 33
	8 – 32
	10 – 24
90467–18804	20 – 4
90467–200A0	10 – 4
	10 – 12
	10 – 13
	10 – 17
	10 – 25
	10 – 47
	20 – 14
90467–210A0	10 – 29
	20 – 15
90467–21800	20 – 13
90467–240A0	10 – 29
90468–12069	3 – 6
90480–06M46	8 – 36
90480–21M63	9 – 19
90480–22M15	5 – 9

PART NO.	REF. NO.
90480–22M15	5 – 12
	15 – 28
90600–91736	17 – 24
	17 – 27
	17 – 31
	20 – 9
	22 – 3
	22 – 7
	24 – 9
	25 – 13
	25 – 20
90601–118UF	11 – 27
	20 – 7
	25 – 16
90601–155U4	24 – 25
90601–162U5	12 – 17
90601–175UR	5 – 16
	25 – 9
90601–200U1	20 – 12
90601–200U2	17 – 29
90601–200U7	22 – 6
90605–502U1	18 – 12
91317–05010	13 – 20
91317–05014	8 – 6
91317–05016	8 – 21
91317–06014	8 – 8
	13 – 19
91317–06016	1 – 29
	1 – 35
	7 – 12
91317–06035	13 – 8
91380–06016	16 – 14
91380–06020	8 – 35
91380–06025	4 – 25
91808–16023	1 – 8
92990–06100	14 – 12
92990–10600	16 – 7
92990–12200	11 – 44
	20 – 22
92995–06600	8 – 34
9299R–05200	20 – 34
9299R–06200	18 – 5
	19 – 17
	21 – 5
	23 – 11
	25 – 24
9299R–10200	23 – 18
93101–21001	11 – 17

PART NO.	REF. NO.
93101–21001	33 – 16
93101–21002	11 – 18
	33 – 15
93101–25M55	12 – 4
	33 – 12
93101–25M56	12 – 7
	33 – 13
93101–35004	3 – 13
	33 – 6
93210–06667	2 – 22
93210–08001	2 – 25
93210–18322	8 – 2
93210–18417	1 – 28
	1 – 34
93210–464A3	11 – 21
	33 – 14
93210–60ME8	16 – 19
93212–04001	13 – 17
93306–07801	3 – 14
93306–205A3	12 – 6
93306–205U0	11 – 15
93306–27211	11 – 13
93306–30441	7 – 9
93306–30610	3 – 16
93430–47M04	12 – 5
93440–07149	1 – 5
93440–10153	1 – 6
93440–28062	3 – 21
93603–12221	7 – 4
93603–14M15	2 – 18
93606–12019	9 – 11
	11 – 7
93606–25M00	7 – 20
93607–54002	4 – 28
93608–16M16	7 – 19
	9 – 6
	13 – 16
94591–49130	4 – 21
94702–00409	16 – 5
94709–00409	16 – 5
95023–06012	1 – 10
95027–06010	2 – 23
95380–06700	14 – 13
9538R–06700	26 – 8
95720–06300	27 – 27
95720–08300	27 – 30
9572R–05300	20 – 35
9572R–06300	11 – 51

PART NO.	REF. NO.
9572R–06300	18 – 6
	19 – 16
	21 – 6
	23 – 12
	24 – 15
	25 – 26
9572R–08300	5 – 15
	15 – 3
	20 – 17
	23 – 8
	23 – 15
95780–08300	16 – 2
95880–06016	16 – 4
97513–05514	13 – 9
97513–06520	2 – 20
97513–06525	7 – 5
97513–06535	7 – 18
97513–06555	1 – 23
	7 – 17
97513–08520	1 – 26
97513–08530	14 – 11
97595–06416	16 – 9
	16 – 12
97595–06520	8 – 11
97595–08540	2 – 16
97880–03008	27 – 14
97880–05025	27 – 17
9788R–05025	20 – 33
98780–04015	8 – 13
99009–52500	7 – 10
99009–72500	3 – 17
99530–08012	2 – 24
99530–10014	2 – 2
	2 – 7
99590–14016	11 – 3
99780–12600	20 – 21