YAMAHA

# PARTS CATALOGUE

# *SuperJet*
# SJ700B-J (F2FA/6BAH/6BA1)
# SJ700B-J (F2FB/6BAJ/6BA1)

1JF2F-100E1

( )

YAMAHA GENUINE Parts & Accessories

2010/9/13

| NEWS NO. | DATE | COMMENT |
|---|---|---|
| PE0-WV-100010 | Sep.,13,2010 | FOREWORD ENGINE SERIAL NO.CORRECTION |

SJ700B-J
PARTS CATALOGUE
©2009 by Yamaha Motor Co., Ltd.
1st edition, June 2009
All rights reserved.
Any reprinting or unauthorized use
without the written permission of
Yamaha Motor Co., Ltd.
is expressly prohibited.
Printed in Japan.

# FOREWORD

This Parts Catalogue is related to the parts for the model(s) on the cover page. When you are ordering replacement parts, please refer to this Parts Catalogue and quote both part numbers and part names correctly.

1. Modifications or additions which have been made after the issue of the Parts Catalogue will be announced in the Parts News.
   It is advisable that you make the necessary corrections to the Parts Catalogue according to the Parts News.

2. Abbreviations
   The following abbreviations are used in this Parts Catalogue.

   “UR” Use specified parts number.
   “UN” Use as many as needed.
   “AP” Alternate Parts
   “LM” Locally Made (Parts need to be ordered locally)
   “F#” Frame No. (Applicable machine No.)
   “O/S” Over Size

3. The number of components for assembly
   - Parts, which are to be supplied in an assembly, are listed with a dot (.) in front of the part name as shown below.
   - The numeral appearing to the right of each component part indicates the quantity of parts for each assembly unit.

| PART NO. | DESCRIPTION | Q’TY | REMARKS |
|---|---|---|---|
| 2F5–83310–60 | FRONT FLASHER LIGHT ASSY | 2 | |
| 115–83311–60 | .BULB (6V–18W) | 1 | |

4. Applicable colours of graphics are represented in the “REMARKS” as shown below.

| PART NO. | DESCRIPTION | Q’TY | REMARKS |
|---|---|---|---|
| 2N4–24110–00–X5 | FUEL TANK COMP. | 2 | MXR |
| 3J1–24240–10 | .GRAPHIC, FUEL TANK | 1 | FOR MXR |

5. Note that the illustrations for reference in finding parts numbers are not to be used for assembling. When assembling, please use the applicable service manual.

6. The asterisk (*) before a reference number indicates modified items after the first edition.

7. Applicable Serial No.

Engine Serial No.

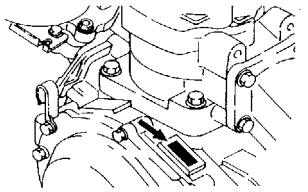

IDE-WV-F1N7

Hull Serial No.

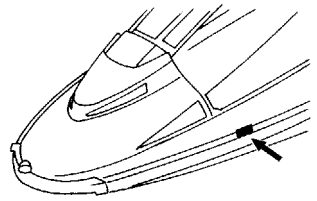

IDB-WV-F1N7

8. Applicable Colour Code (The (*) mark shows Model colour.)

| Abbreviation | Colour Name | Colour Code |
|---|---|---|
| NMC(*) | GRAY METALLIC C | 008S |
| SS4 | BLACK SOLID 4 | 008P |
| PURW(*) | PURE WHITE | 0240 |
| DPBSM | DARK PURPLISH BLUE SOLID M | 0754 |
| DVC2 | DARK VIOLET COAT 2 | GA5D |
| YB | YAMAHA BLACK | 0033 |
| | | |
| | | |
| | | |
| | | |

9. Quantity Column Information

| Column No. | Name Of Q'ty Column | Destination |
|---|---|---|
| 1 | EUR | EUROPE |
| 2 | GENE | EXCEPT USA,EUR,JPN |
| | | |
| | | |
| | | |

10. Applicable Starting Serial No.

Engine Serial No.

| Serial No. | Name Of Q'ty Column | Model Code |
|---|---|---|
| 64V-1024577 | EUR | 6BAJ |
| 64V-1024577 | GENE | 6BAH |
| | | |
| | | |
| | | |

Hull Serial No.

| Serial No. | Name Of Q'ty Column | Model Code |
|---|---|---|
| F2F-504283 | EUR | F2FB |
| F2F-504283 | GENE | F2FA |
| | | |
| | | |
| | | |

# CONTENTS

CYLINDER & CRANKCASE ..... 1
CRANKSHAFT & PISTON ..... 3
INTAKE ..... 5
CARBURETOR ..... 7
EXHAUST 1 ..... 9
FUEL ..... 12
JET UNIT 1 ..... 14
JET UNIT 2 ..... 17
GENERATOR ..... 18
STARTING MOTOR ..... 19
ELECTRICAL 1 ..... 20
ELECTRICAL 2 ..... 22
ENGINE HATCH ..... 23
HULL & DECK ..... 25
GUNWALE & MAT ..... 26
FUEL TANK ..... 27
EXHAUST 2 ..... 29
CONTROL CABLE ..... 30
STEERING 1 ..... 31
STEERING 2 ..... 33
GRAPHICS ..... 35
IMPORTANT LABELS ..... 36
REPAIR KIT 1 ..... 37
REPAIR KIT 2 ..... 38

## INDEX

NUMERICAL INDEX ..... 39

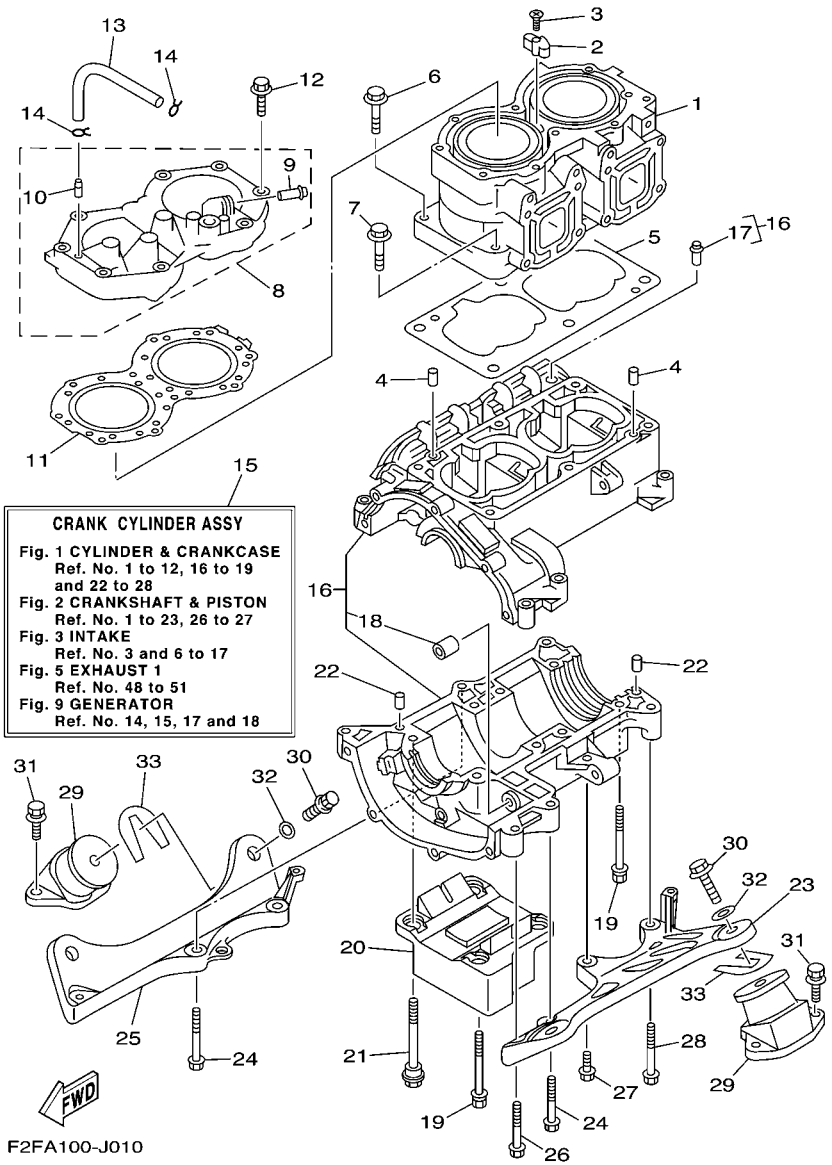


## FIG. 1 CYLINDER & CRANKCASE

| REF. NO. | PART NO. | DESCRIPTION | EUR | GENE | | | | REMARKS |
|---|---|---|---|---|---|---|---|---|
| 1 | 61X–11311–01–8S | CYLINDER 1 | 1 | 1 | | | | |
| 2 | 6E5–11325–00 | ANODE | 1 | 1 | | | | |
| 3 | 98780–04015 | SCREW, FLAT HEAD | 1 | 1 | | | | |
| 4 | 93606–12019 | PIN, DOWEL | 2 | 2 | | | | |
| 5 | 6M6–11351–A2 | GASKET, CYLINDER | 1 | 1 | | | | |
| 6 | 90119–10M56 | BOLT, WITH WASHER | 4 | 4 | | | | |
| 7 | 90119–10M07 | BOLT, WITH WASHER | 2 | 2 | | | | |
| 8 | 64U–11111–00–8S | HEAD, CYLINDER 1 | 1 | 1 | | | | |
| 9 | 6K8–51129–00 | .NIPPLE | 1 | 1 | | | | |
| 10 | 6R7–14485–00 | .PIPE, JOINT | 1 | 1 | | | | |
| 11 | 62T–11181–01 | GASKET, CYLINDER HEAD 1 | 1 | 1 | | | | |
| 12 | 90119–08M96 | BOLT, WITH WASHER | 10 | 10 | | | | |
| 13 | 90445–07M19 | HOSE (L200) | 1 | 1 | | | | |
| 14 | 90467–06016 | CLIP | 2 | 2 | | | | |
| 15 | 64V–W0090–02–8S | CRANK CYLINDER ASSY | 1 | 1 | | | | |
| 16 | 62T–15100–00–8S | CRANKCASE ASSY | 1 | 1 | | | | |
| 17 | 62T–14251–10 | .NIPPLE | 1 | 1 | | | | |
| 18 | 90380–12M29 | .BUSH, SOLID | 1 | 1 | | | | |
| 19 | 90119–08M55 | BOLT, WITH WASHER | 5 | 5 | | | | |
| 20 | 6BA–44532–00 | STOPPER, UPPER MOUNT | 1 | 1 | | | | |
| 21 | 90109–08M56 | BOLT | 3 | 3 | | | | |
| 22 | 93606–12019 | PIN, DOWEL | 2 | 2 | | | | |
| 23 | 6R7–21415–01–94 | BRACKET, FRONT UPPER 1 | 1 | 1 | | | | |
| 24 | 90119–10M02 | BOLT, WITH WASHER | 4 | 4 | | | | |
| 25 | 6R7–21425–01–94 | BRACKET, REAR UPPER 1 | 1 | 1 | | | | |
| 26 | 90119–10M01 | BOLT, WITH WASHER | 1 | 1 | | | | |
| 27 | 90119–10M00 | BOLT, WITH WASHER | 1 | 1 | | | | |

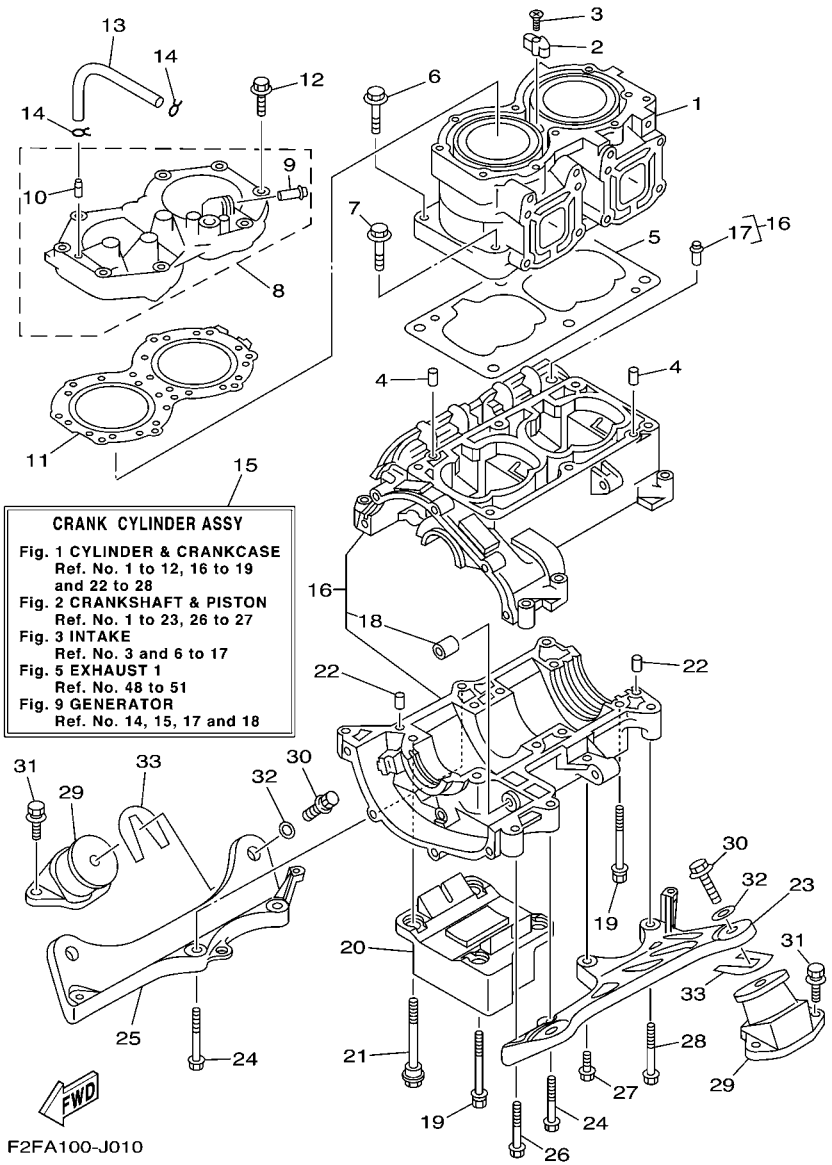


## FIG. 1 CYLINDER & CRANKCASE

| REF. NO. | PART NO. | DESCRIPTION | EUR | GENE | | | | REMARKS |
|---|---|---|---|---|---|---|---|---|
| 28 | 90119–10M03 | BOLT, WITH WASHER | 1 | 1 | | | | |
| 29 | 6R7–44517–00–8S | MOUNT RUBBER | 4 | 4 | | | | |
| 30 | 90119–08904 | BOLT, WITH WASHER | 4 | 4 | | | | |
| 31 | 90119–08038 | BOLT, WITH WASHER | 8 | 8 | | | | |
| 32 | EU0–67324–00 | PLATE | 4 | 4 | | | | |
| 33 | EU0–67354–00–01 | SHIM (T=0.1) | 10 | 10 | | | | UR |
| | EU0–67354–00–03 | SHIM (T=0.3) | 10 | 10 | | | | UR |
| | EU0–67354–00–05 | SHIM (T=0.5) | 10 | 10 | | | | UR |
| | EU0–67354–00–10 | SHIM (T=1.0) | 10 | 10 | | | | UR |
| | EU0–67354–00–20 | SHIM (T=2.0) | 10 | 10 | | | | UR |

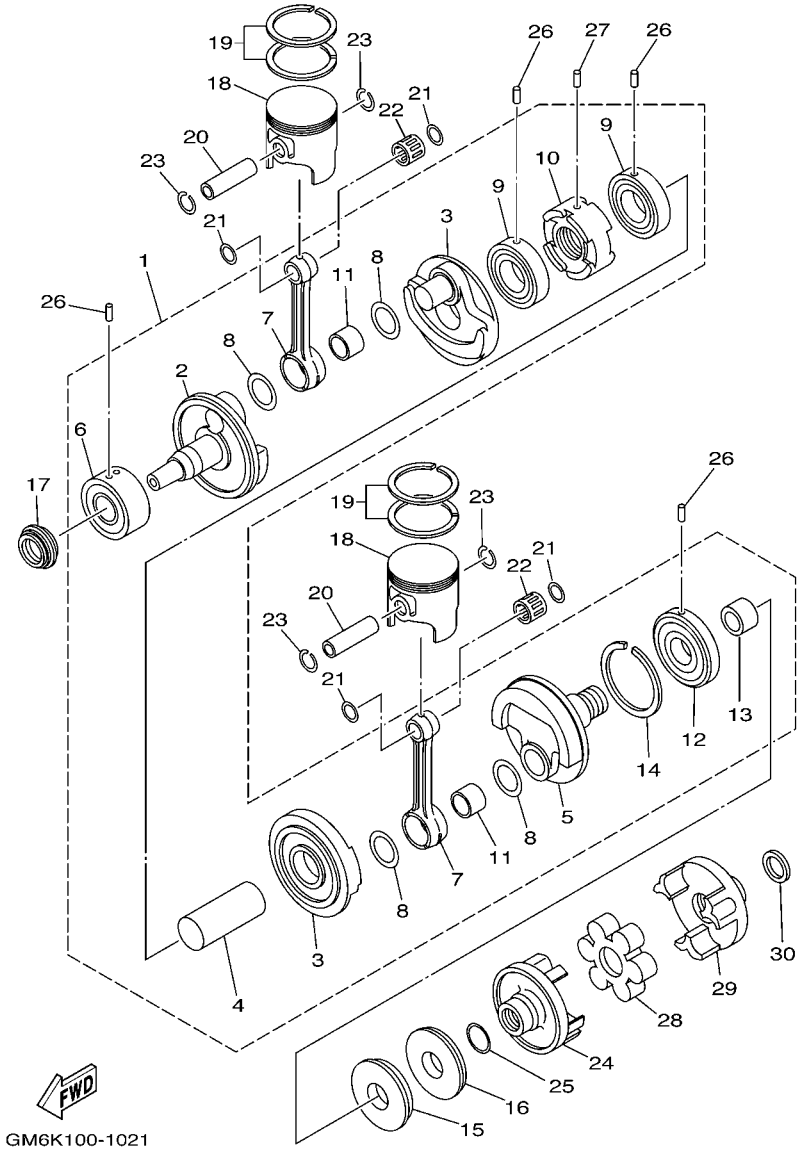


## FIG. 2 CRANKSHAFT & PISTON

| REF. NO. | PART NO. | DESCRIPTION | EUR | GENE | | | | REMARKS |
|---|---|---|---|---|---|---|---|---|
| 1 | 61X–11400–03 | CRANKSHAFT ASSY | 1 | 1 | | | | |
| 2 | 6M6–11412–00 | .CRANK 1 | 1 | 1 | | | | |
| 3 | 6M6–11422–00 | .CRANK 2 | 2 | 2 | | | | |
| 4 | 6M6–11431–10 | .CRANK 3 | 1 | 1 | | | | |
| 5 | 6M6–11442–01 | .CRANK 4 | 1 | 1 | | | | |
| 6 | 93305–30601 | .BEARING | 1 | 1 | | | | |
| 7 | 64X–11651–01 | .ROD, CONNECTING | 2 | 2 | | | | |
| 8 | 82M–11685–00 | .WASHER, CRANK PIN | 4 | 4 | | | | |
| 9 | 93306–207U2 | .BEARING | 2 | 2 | | | | |
| 10 | 65U–11515–00 | .SEAL, LABYRINTH 1 | 1 | 1 | | | | |
| 11 | 93310–525U0 | .BEARING | 2 | 2 | | | | |
| 12 | 93306–307U3 | .BEARING | 1 | 1 | | | | |
| 13 | 62T–45526–00 | .COLLAR, DRIVE SHAFT | 1 | 1 | | | | |
| 14 | 93440–80023 | .CIRCLIP | 1 | 1 | | | | |
| 15 | 93102–36M33 | OIL SEAL | 1 | 1 | | | | |
| 16 | 93101–36M46 | OIL SEAL | 1 | 1 | | | | |
| 17 | 93103–32M01 | OIL SEAL | 1 | 1 | | | | |
| 18 | 61X–11631–02–93 | PISTON (STD) | 2 | 2 | | | | |
| | 61X–11635–02 | PISTON (0.25MM O/S) | 2 | 2 | | | | AP |
| | 61X–11636–02 | PISTON (0.50MM O/S) | 2 | 2 | | | | AP |
| 19 | 61X–11603–01 | PISTON RING SET (STD) | 2 | 2 | | | | |
| | 61X–11604–01 | PISTON RING SET (0.25MM O/S) | 2 | 2 | | | | AP |
| | 61X–11605–01 | PISTON RING SET (0.50MM O/S) | 2 | 2 | | | | AP |
| 20 | 61X–11633–00 | PIN, PISTON | 2 | 2 | | | | |
| 21 | 90201–20M04 | WASHER, PLATE | 4 | 4 | | | | |
| 22 | 93310–320U2 | BEARING | 2 | 2 | | | | |
| 23 | 93450–21053 | CIRCLIP | 4 | 4 | | | | |

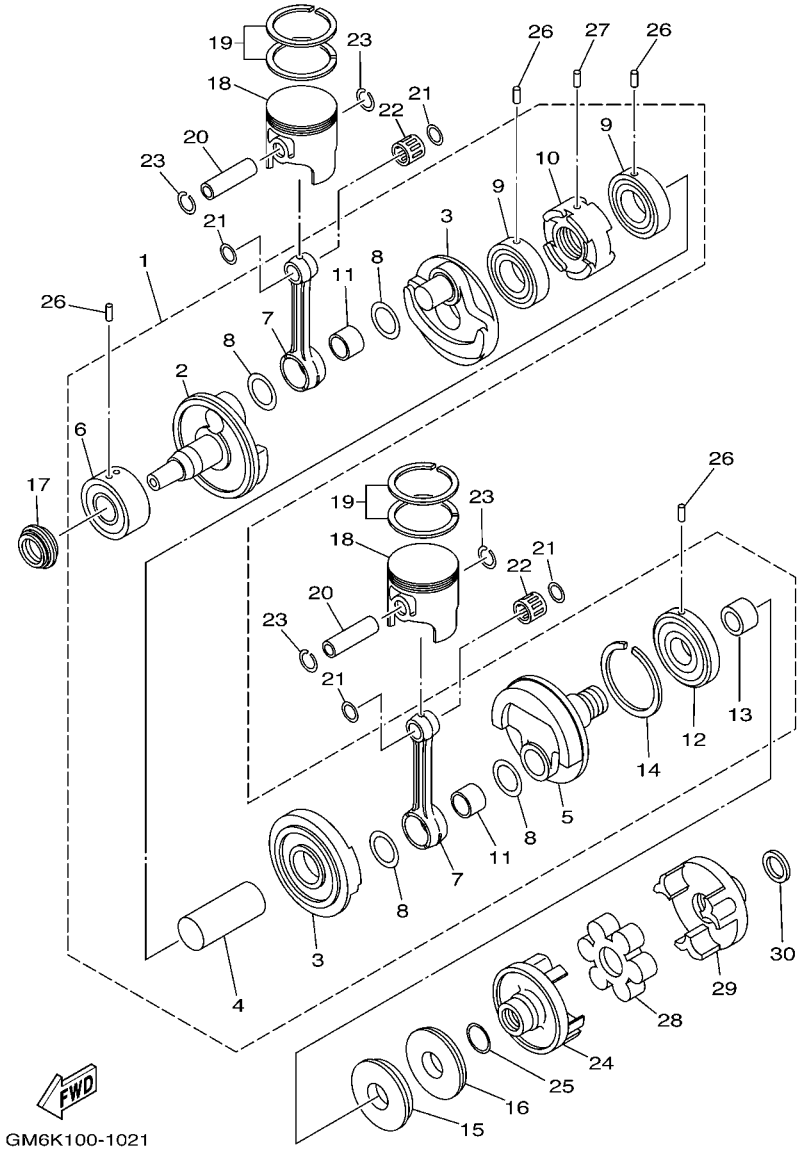


## FIG. 2 CRANKSHAFT & PISTON

| REF. NO. | PART NO. | DESCRIPTION | EUR | GENE | | | | REMARKS |
|---|---|---|---|---|---|---|---|---|
| 24 | 6M6–45813–32–8P | FLANGE, COUPLING | 1 | 1 | | | | |
| 25 | 62T–45127–00 | SEAL | 1 | 1 | | | | |
| 26 | 93603–10049 | PIN, DOWEL | 4 | 4 | | | | |
| 27 | 93604–07141 | PIN, DOWEL | 1 | 1 | | | | |
| 28 | 61X–4581J–00 | RUBBER SHAFT COUPLING | 1 | 1 | | | | |
| 29 | 6M6–45813–22–8P | FLANGE, COUPLING | 1 | 1 | | | | |
| 30 | 90201–24M02 | WASHER, PLATE | 1 | 1 | | | | |

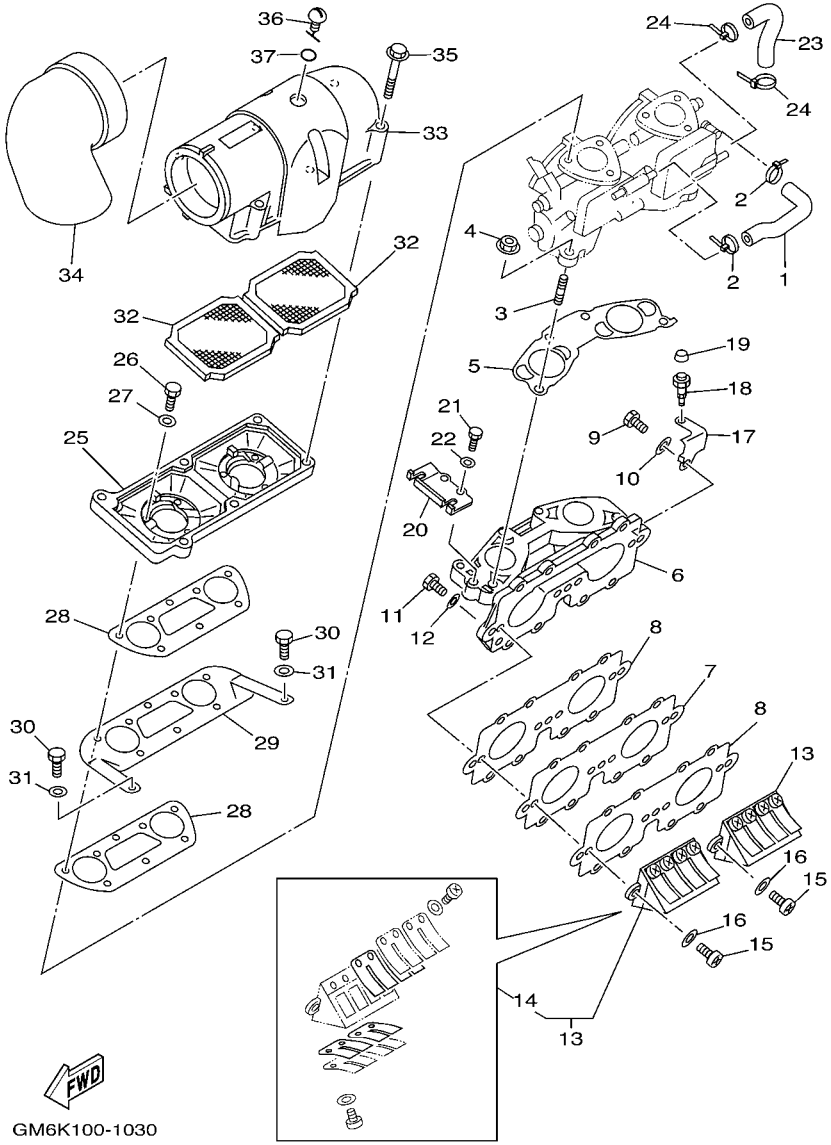


## FIG. 3 INTAKE

| REF. NO. | PART NO. | DESCRIPTION | EUR | GENE | | | | REMARKS |
|---|---|---|---|---|---|---|---|---|
| 1 | 62T–24313–01 | PIPE 3 | 1 | 1 | | | | |
| 2 | 90465–11M10 | CLAMP | 2 | 2 | | | | |
| 3 | 90116–08M60 | BOLT, STUD | 4 | 4 | | | | |
| 4 | 90179–08M15 | NUT | 4 | 4 | | | | |
| 5 | 62T–13556–00 | GASKET, MANIFOLD | 1 | 1 | | | | |
| 6 | 62T–13555–00–94 | MANIFOLD, INTAKE | 1 | 1 | | | | |
| 7 | 62T–13624–00 | PLATE,REED VALVE | 1 | 1 | | | | |
| 8 | 62T–13566–00 | GASKET | 2 | 2 | | | | |
| 9 | 97013–06035 | BOLT | 3 | 3 | | | | |
| 10 | 92903–06600 | WASHER, PLATE | 3 | 3 | | | | |
| 11 | 97013–06025 | BOLT | 8 | 8 | | | | |
| 12 | 92903–06600 | WASHER, PLATE | 8 | 8 | | | | |
| 13 | 62T–13610–00 | REED VALVE ASSY | 2 | 2 | | | | |
| 14 | 62T–W0004–00 | .REED SET | 1 | 1 | | | | |
| 15 | 97880–05016 | SCREW, PAN HEAD | 4 | 4 | | | | |
| 16 | 92990–05600 | WASHER, PLATE | 4 | 4 | | | | |
| 17 | 62T–14243–01 | PLATE | 1 | 1 | | | | |
| 18 | 61L–5169A–00 | NIPPLE, GREASE | 1 | 1 | | | | |
| 19 | 663–45119–00 | CAP, GREASE NIPPLE | 1 | 1 | | | | |
| 20 | 62T–14527–02 | PLATE | 1 | 1 | | | | |
| 21 | 97013–06016 | BOLT | 2 | 2 | | | | |
| 22 | 92903–06600 | WASHER, PLATE | 2 | 2 | | | | |
| 23 | 62T–24314–01 | PIPE 4 | 1 | 1 | | | | |
| 24 | 90465–11M10 | CLAMP | 2 | 2 | | | | |
| 25 | 62T–14284–10–8S | COVER, CARBURETOR 2 | 1 | 1 | | | | |
| 26 | 97013–06020 | BOLT | 6 | 6 | | | | |
| 27 | 92903–06600 | WASHER, PLATE | 6 | 6 | | | | |

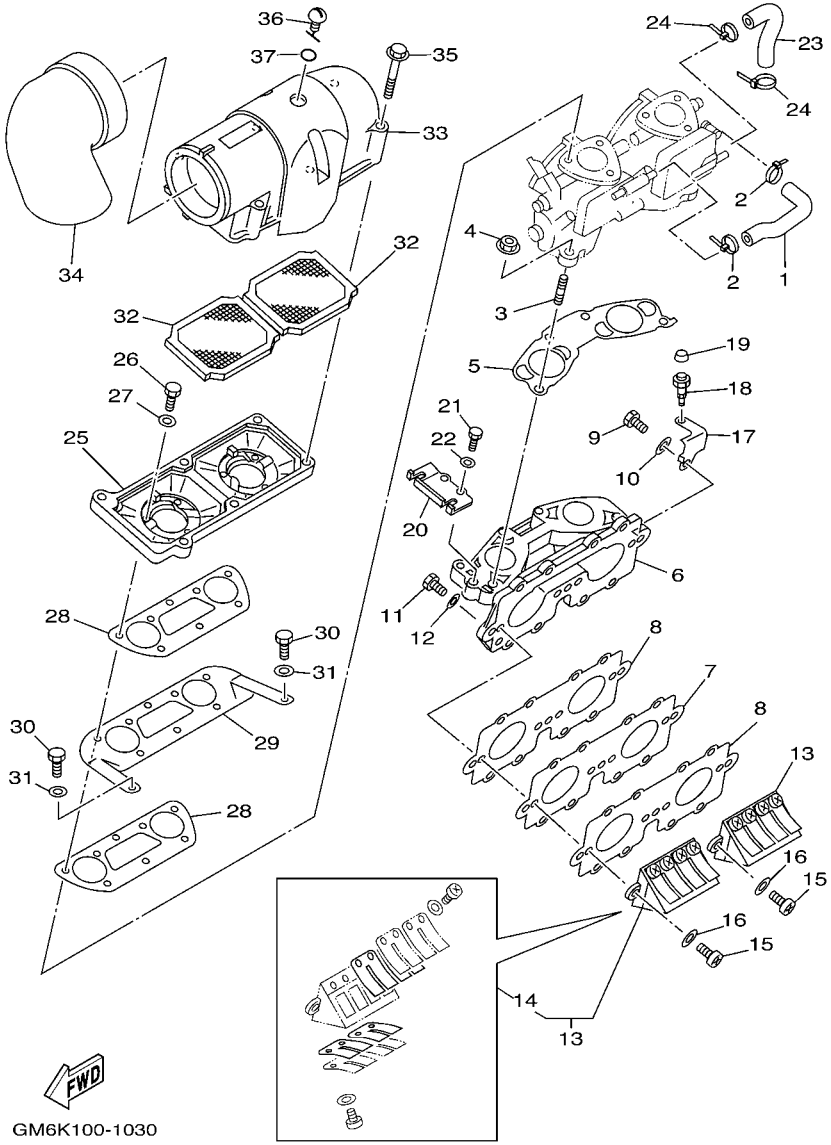


## FIG. 3 INTAKE

| REF. NO. | PART NO. | DESCRIPTION | EUR | GENE | | | | REMARKS |
|---|---|---|---|---|---|---|---|---|
| 28 | 62T–13674–00 | GASKET, AIR COOLER COVER 1 | 2 | 2 | | | | |
| 29 | 62T–14255–00 | PLATE | 1 | 1 | | | | |
| 30 | 97013–06012 | BOLT | 2 | 2 | | | | |
| 31 | 92903–06600 | WASHER, PLATE | 2 | 2 | | | | |
| 32 | 62T–14451–00 | ELEMENT, AIR CLEANER | 2 | 2 | | | | |
| 33 | 62T–14283–01 | COVER, CARBURETOR 1 | 1 | 1 | | | | |
| 34 | 62T–14419–00 | PIPE | 1 | 1 | | | | |
| 35 | 90119–05M02 | BOLT, WITH WASHER | 6 | 6 | | | | |
| 36 | 62T–14435–00 | GROMMET | 1 | 1 | | | | |
| 37 | 93210–13M63 | O-RING | 1 | 1 | | | | |

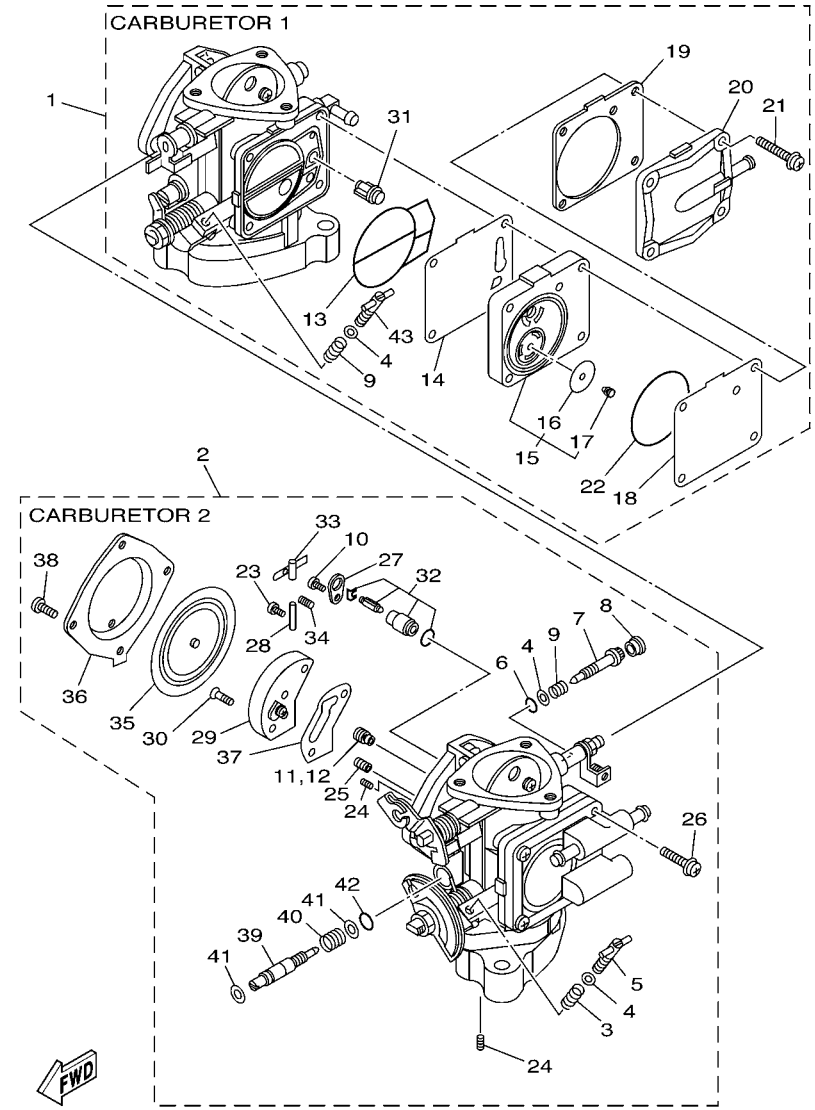


## FIG. 4 CARBURETOR

| REF. NO. | PART NO. | DESCRIPTION | EUR | GENE | | | | REMARKS |
|---|---|---|---|---|---|---|---|---|
| 1 | 64U–14301–03 | CARBURETOR ASSY 1 | 1 | 1 | | | | |
| 2 | 64U–14302–03 | CARBURETOR ASSY 2 | 1 | 1 | | | | |
| 3 | 47X–14133–00 | .SPRING, THROTTLE STOP | 1 | 1 | | | | CARBURETOR 2 |
| 4 | 812–14235–00 | .WASHER, NEEDLE | 4 | 4 | | | | |
| 5 | 6M6–14521–01 | .SCREW, ADJUST | 1 | 1 | | | | CARBURETOR 2 |
| 6 | 812–14147–00 | .O-RING | 2 | 2 | | | | |
| 7 | 63M–14946–00 | .PLATE, NEEDLE FITTING | 2 | 2 | | | | |
| 8 | 6K8–14471–10 | .CAP, CARBURETOR | 2 | 2 | | | | |
| 9 | 3KW–14932–00 | .SPRING, THROTTLE 2 | 3 | 3 | | | | |
| 10 | 6M6–14503–00 | .SCREW | 2 | 2 | | | | |
| 11 | 3G2–14231–26 | .JET, MAIN (#130) | 1 | 1 | | | | CARBURETOR 1 |
| 12 | 3G2–14231–26 | .JET, MAIN (#130) | 1 | 1 | | | | CARBURETOR 2 |
| 13 | 6K8–14564–00 | .O-RING | 2 | 2 | | | | |
| 14 | 6K8–24411–20 | .DIAPHRAGM | 1 | 1 | | | | CARBURETOR 1 |
| 15 | 6M6–24413–01 | .BODY 2 | 1 | 1 | | | | CARBURETOR 1 |
| 16 | 65U–24421–00 | ..VALVE, CHECK | 2 | 2 | | | | CARBURETOR 1 |
| 17 | 65U–24492–00 | ..BUSH, FUEL PUMP | 2 | 2 | | | | CARBURETOR 1 |
| 18 | 6K8–24421–10 | .VALVE, CHECK | 1 | 1 | | | | CARBURETOR 1 |
| 19 | 6K8–24431–20 | .GASKET, FUEL PUMP 1 | 1 | 1 | | | | CARBURETOR 1 |
| 20 | 6K8–24452–10 | .COVER | 1 | 1 | | | | CARBURETOR 1 |
| 21 | 97980–05330 | .SCREW, WITH WASHER | 4 | 4 | | | | CARBURETOR 1 |
| 22 | 6K8–14563–00 | .O-RING | 1 | 1 | | | | CARBURETOR 1 |
| 23 | 6K8–14503–02 | .SCREW | 2 | 2 | | | | |
| 24 | 6K8–14521–10 | .SCREW | 4 | 4 | | | | |
| 25 | 830–14231–14 | .JET, MAIN (# 70) | 2 | 2 | | | | |
| 26 | 98580–05018 | .SCREW, PAN HEAD | 4 | 4 | | | | CARBURETOR 2 |
| 27 | 6K8–14527–11 | .PLATE | 2 | 2 | | | | |

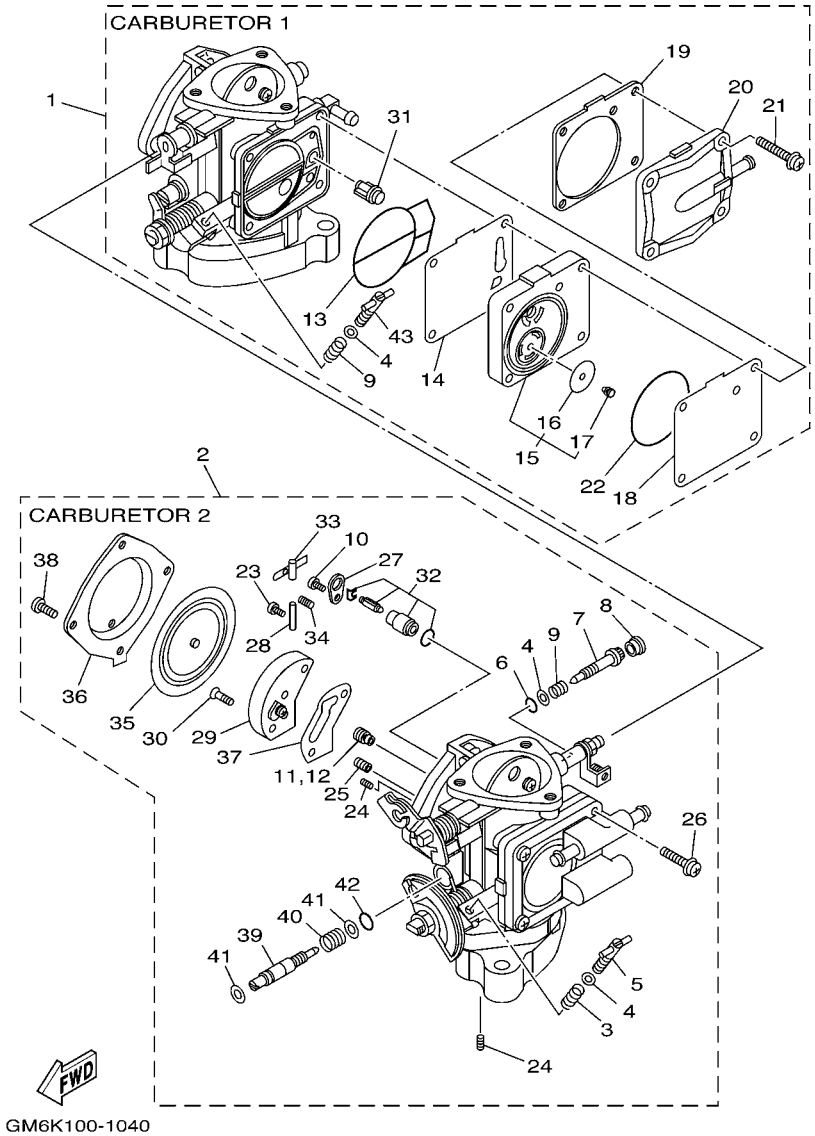


## FIG. 4 CARBURETOR

| REF. NO. | PART NO. | DESCRIPTION | EUR | GENE | | | | REMARKS |
|---|---|---|---|---|---|---|---|---|
| 28 | 439–14186–00 | .PIN, FLOAT | 2 | 2 | | | | |
| 29 | 6R7–24412–02 | .BODY 1 | 2 | 2 | | | | |
| 30 | 6K8–14523–11 | .SCREW, STOP | 4 | 4 | | | | |
| 31 | 6R7–14569–00 | .STRAINER | 2 | 2 | | | | |
| 32 | 61X–14916–16 | .NEEDLE | 2 | 2 | | | | |
| 33 | 6K8–14547–01 | .ARM, FLOAT | 2 | 2 | | | | |
| 34 | 6R7–14253–00 | .SPRING | 2 | 2 | | | | |
| 35 | 6R7–14541–00 | .DIAPHRAGM, PUMP | 2 | 2 | | | | |
| 36 | 6R7–14542–00 | .BODY, PUMP 1 | 2 | 2 | | | | |
| 37 | 6K8–14536–11 | .GASKET | 2 | 2 | | | | |
| 38 | 97880–05012 | .SCREW, PAN HEAD | 8 | 8 | | | | |
| 39 | 64U–14923–00 | .SCREW, PILOT | 2 | 2 | | | | |
| 40 | 6K8–14589–00 | .SPRING | 2 | 2 | | | | |
| 41 | 822–14235–00 | .WASHER, NEEDLE | 4 | 4 | | | | |
| 42 | 583–14561–00 | .O-RING | 2 | 2 | | | | |
| 43 | 6K8–14521–01 | .SCREW, ADJUST | 1 | 1 | | | | CARBURETOR 1 |

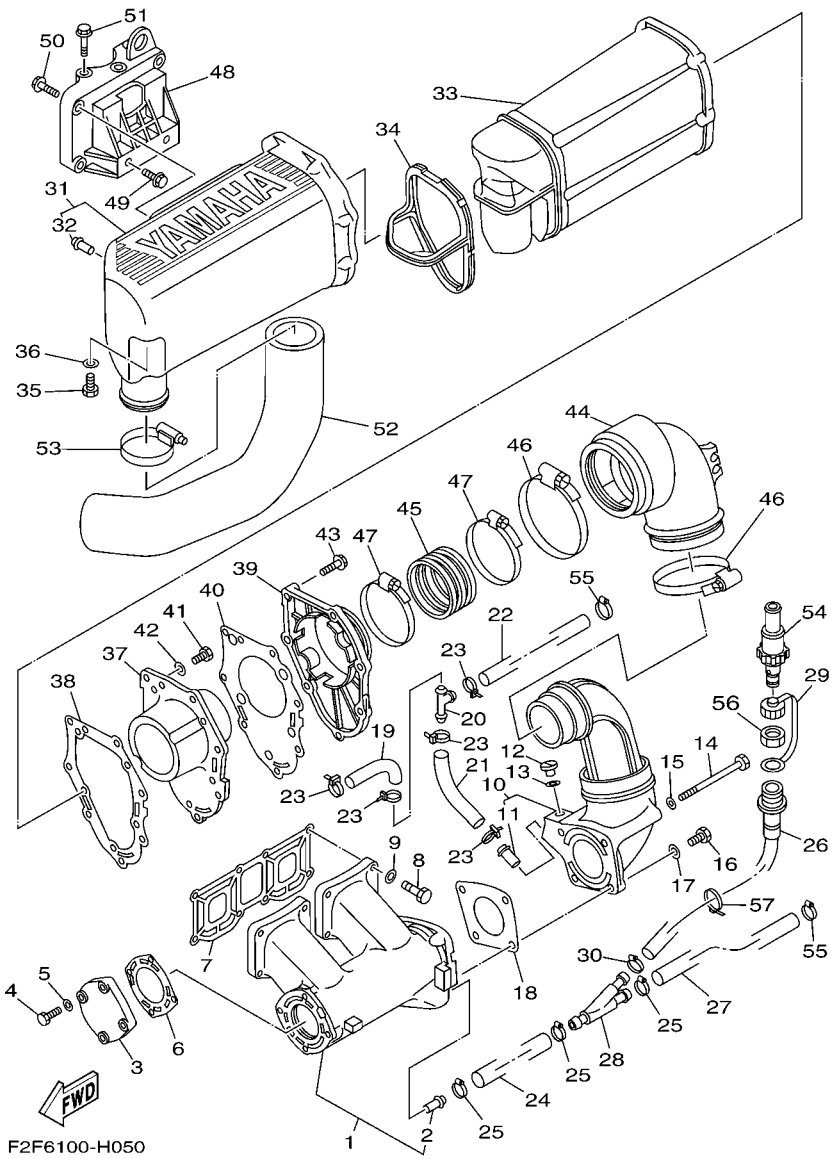


## FIG. 5 EXHAUST 1

| REF. NO. | PART NO. | DESCRIPTION | EUR | GENE | | | | REMARKS |
|---|---|---|---|---|---|---|---|---|
| 1 | 61X–14711–01–94 | MUFFLER 1 | 1 | 1 | | | | |
| 2 | 6K8–51129–00 | .NIPPLE | 1 | 1 | | | | |
| 3 | 6M6–14718–01–8S | PROTECTOR, MUFFLER 1 | 1 | 1 | | | | |
| 4 | 97013–06025 | BOLT | 4 | 4 | | | | |
| 5 | 92903–06600 | WASHER, PLATE | 4 | 4 | | | | |
| 6 | 6M6–14739–A1 | GASKET, MUFFLER DAMPER 1 | 1 | 1 | | | | |
| 7 | 61X–14613–A1 | GASKET, EXHAUST PIPE | 1 | 1 | | | | |
| 8 | 97013–08035 | BOLT | 8 | 8 | | | | |
| 9 | 92903–08600 | WASHER, PLATE | 8 | 8 | | | | |
| 10 | 61L–14712–00–94 | RING, JOINT | 1 | 1 | | | | |
| 11 | 6K8–51129–00 | .NIPPLE | 1 | 1 | | | | |
| 12 | 90340–08M04 | PLUG, STRAIGHT SCREW | 1 | 1 | | | | |
| 13 | 90430–08020 | GASKET | 1 | 1 | | | | |
| 14 | 97013–08090 | BOLT | 2 | 2 | | | | |
| 15 | 92903–08600 | WASHER, PLATE | 2 | 2 | | | | |
| 16 | 97013–08025 | BOLT | 2 | 2 | | | | |
| 17 | 92903–08600 | WASHER, PLATE | 2 | 2 | | | | |
| 18 | 6R7–14749–A1 | GASKET, MUFFLER DAMPER 2 | 1 | 1 | | | | |
| 19 | 90445–14M29 | HOSE (L125) | 1 | 1 | | | | |
| 20 | 6E5–24378–00 | PIPE, JOINT 3 | 1 | 1 | | | | |
| 21 | 90445–14M29 | HOSE (L125) | 1 | 1 | | | | |
| 22 | 90445–14M33 | HOSE (L1150) | 1 | 1 | | | | |
| 23 | 90465–11M10 | CLAMP | 5 | 5 | | | | |
| 24 | 90445–14M14 | HOSE (L330) | 1 | 1 | | | | |
| 25 | 90450–14M05 | HOSE CLAMP ASSY | 3 | 3 | | | | |
| 26 | 63M–12580–00 | JOINT ASSY | 1 | 1 | | | | |
| 27 | 90445–14M05 | HOSE (L240) | 1 | 1 | | | | |

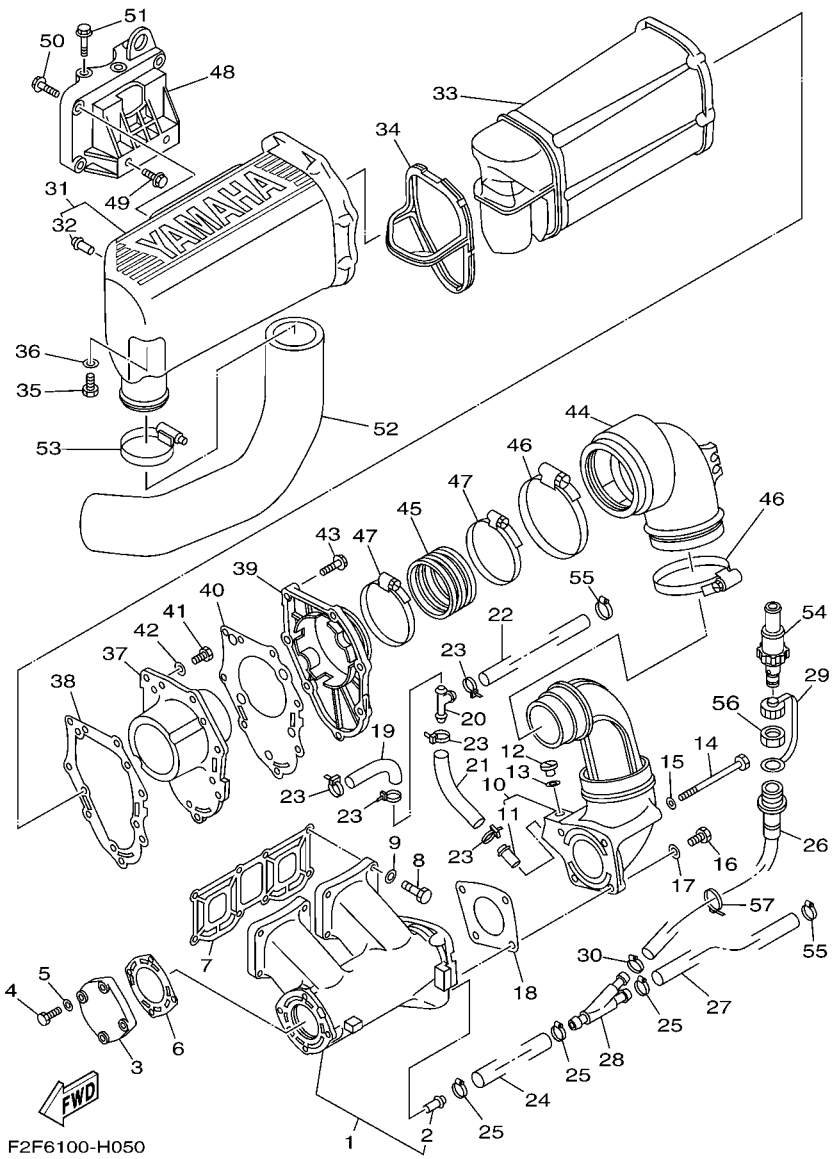


## FIG. 5 EXHAUST 1

| REF. NO. | PART NO. | DESCRIPTION | EUR | GENE | | | | REMARKS |
|---|---|---|---|---|---|---|---|---|
| 28 | 64X–12581–00 | JOINT, HOSE 1 | 1 | 1 | | | | |
| 29 | 682–84385–01 | CAP,1 | 1 | 1 | | | | |
| 30 | 90450–18M09 | HOSE CLAMP ASSY | 1 | 1 | | | | |
| 31 | 6R7–14721–00–8S | MUFFLER 2 | 1 | 1 | | | | |
| 32 | 6R7–14485–00 | .PIPE, JOINT | 1 | 1 | | | | |
| 33 | 6R7–14753–00–8S | SILENCER, EXHAUST | 1 | 1 | | | | |
| 34 | 6R7–15761–00 | SEAL, RUBBER 1 | 1 | 1 | | | | |
| 35 | 97013–06020 | BOLT | 1 | 1 | | | | |
| 36 | 92903–06600 | WASHER, PLATE | 1 | 1 | | | | |
| 37 | 6R7–14785–00–8S | DIFFUSER | 1 | 1 | | | | |
| 38 | 6R7–14755–A0 | GASKET, SILENCER | 1 | 1 | | | | |
| 39 | 6R7–41113–00–8S | OUTER COVER, EXHAUST | 1 | 1 | | | | |
| 40 | 6R7–41114–A0 | GASKET, EXHAUST OUTER COVER | 1 | 1 | | | | |
| 41 | 97095–06016 | BOLT | 5 | 5 | | | | |
| 42 | 92995–06600 | WASHER | 5 | 5 | | | | |
| 43 | 90119–06MA1 | BOLT, WITH WASHER | 7 | 7 | | | | |
| 44 | 61L–14615–A0 | JOINT, EXHAUST 1 | 1 | 1 | | | | |
| 45 | 61L–14625–A0 | JOINT, EXHAUST 2 | 1 | 1 | | | | |
| 46 | 90460–90M11 | CLAMP, HOSE | 2 | 2 | | | | |
| 47 | 90460–70M16 | CLAMP, HOSE | 2 | 2 | | | | |
| 48 | 6M6–14771–00–94 | STAY, MUFFLER 1 | 1 | 1 | | | | |
| 49 | 90105–10M49 | BOLT, FLANGE | 2 | 2 | | | | |
| 50 | 90105–10M88 | BOLT, FLANGE | 3 | 3 | | | | |
| 51 | 90119–10M17 | BOLT, WITH WASHER | 3 | 3 | | | | |
| 52 | 64V–14752–00 | PIPE, OUTLET | 1 | 1 | | | | |
| 53 | 90460–64M15 | CLAMP, HOSE | 1 | 1 | | | | |
| 54 | 67X–E2590–10 | CONDUCTION ASSY | 1 | 1 | | | | |

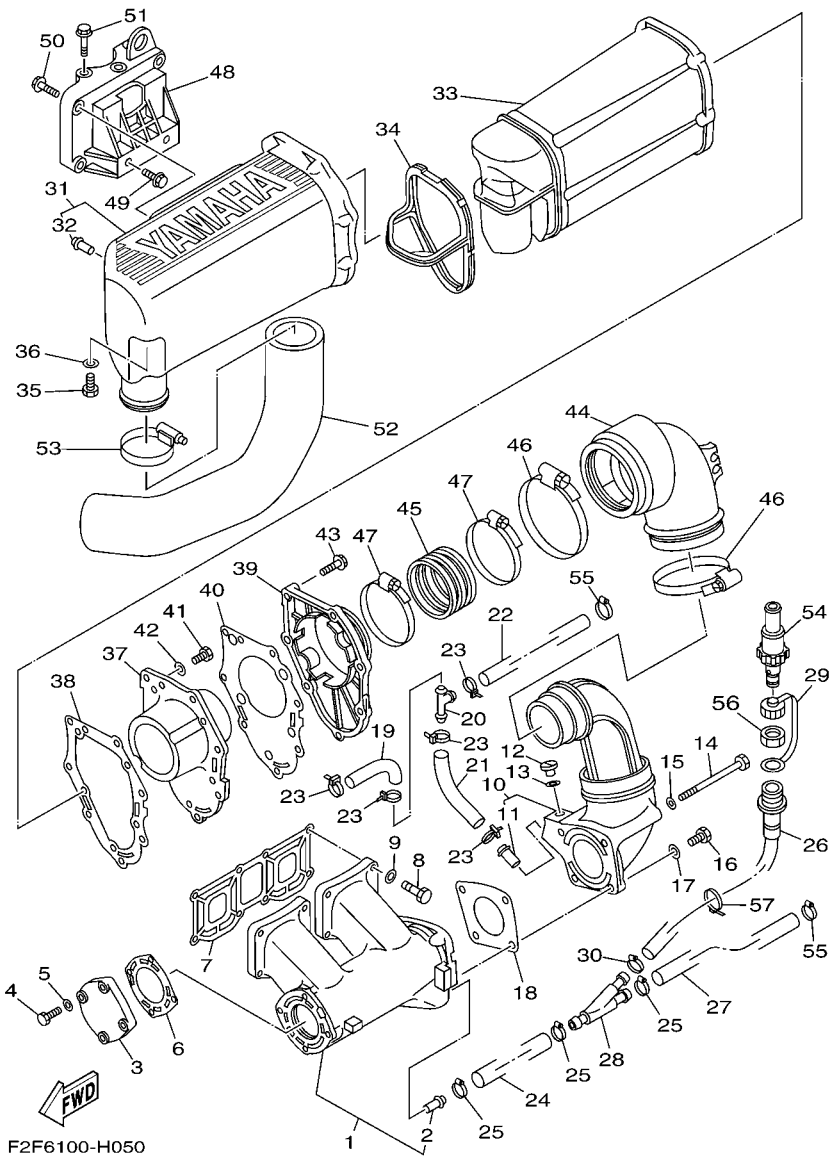


## FIG. 5 EXHAUST 1

| REF. NO. | PART NO. | DESCRIPTION | EUR | GENE | | | | REMARKS |
|---|---|---|---|---|---|---|---|---|
| 55 | 90450–14M05 | HOSE CLAMP ASSY | 2 | 2 | | | | |
| 56 | EU0–61652–00 | NUT | 1 | 1 | | | | |
| 57 | 90601–20024 | BAND | 1 | 1 | | | | |

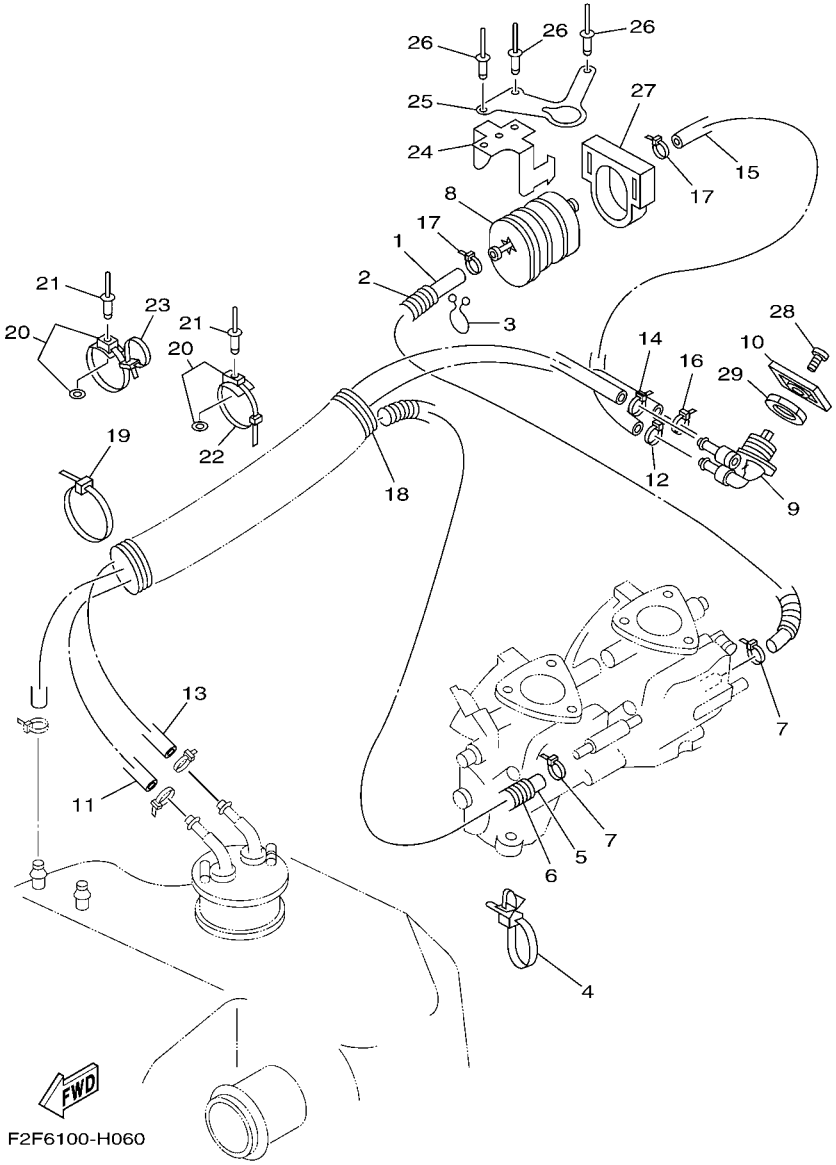


## FIG. 6 FUEL

| REF. NO. | PART NO. | DESCRIPTION | EUR | GENE | | | | REMARKS |
|---|---|---|---|---|---|---|---|---|
| 1 | 90445–10ME8 | HOSE (L230) | 1 | 1 | | | | |
| 2 | 90446–14M23 | HOSE (L180) | 1 | 1 | | | | |
| 3 | 90464–08M07 | CLAMP | 1 | 1 | | | | |
| 4 | 90465–12M56 | CLAMP | 1 | 1 | | | | |
| 5 | 90445–10MF1 | HOSE (L1220) | 1 | 1 | | | | |
| 6 | 90446–14M64 | HOSE (L560) | 1 | 1 | | | | |
| 7 | 90465–11M10 | CLAMP | 2 | 2 | | | | |
| 8 | 6K8–24560–10 | FILTER ASSY | 1 | 1 | | | | |
| 9 | 6K8–24500–02 | FUEL COCK ASSY 1 | 1 | 1 | | | | |
| 10 | 6R7–24524–00 | LEVER, COCK | 1 | 1 | | | | |
| 11 | 90445–10ME3 | HOSE (L1010) | 1 | 1 | | | | |
| 12 | 90465–11M10 | CLAMP | 1 | 1 | | | | |
| 13 | 90445–10M98 | HOSE (L1010) | 1 | 1 | | | | |
| 14 | 90465–11M10 | CLAMP | 1 | 1 | | | | |
| 15 | 90445–10ME4 | HOSE (L140) | 1 | 1 | | | | |
| 16 | 90465–11M10 | CLAMP | 1 | 1 | | | | |
| 17 | 90465–11M10 | CLAMP | 2 | 2 | | | | |
| 18 | GM6–6773E–00 | TUBE,2 | 1 | 1 | | | | |
| 19 | 90601–20006 | BAND | 1 | 1 | | | | |
| 20 | 90600–91736 | CLAMP COMP. | 7 | 7 | | | | |
| 21 | 90267–48925 | RIVET, BLIND | 7 | 7 | | | | |
| 22 | 90601–20006 | BAND | 6 | 6 | | | | |
| 23 | 90601–20016 | BAND | 2 | 2 | | | | |
| 24 | EU0–67816–30 | BRACKET, FUEL FILTER | 1 | 1 | | | | |
| 25 | F1N–65938–00 | STAY 1 | 1 | 1 | | | | |
| 26 | 90267–48940 | RIVET, BLIND | 3 | 3 | | | | |
| 27 | EU0–67817–00 | HOLDER | 1 | 1 | | | | |

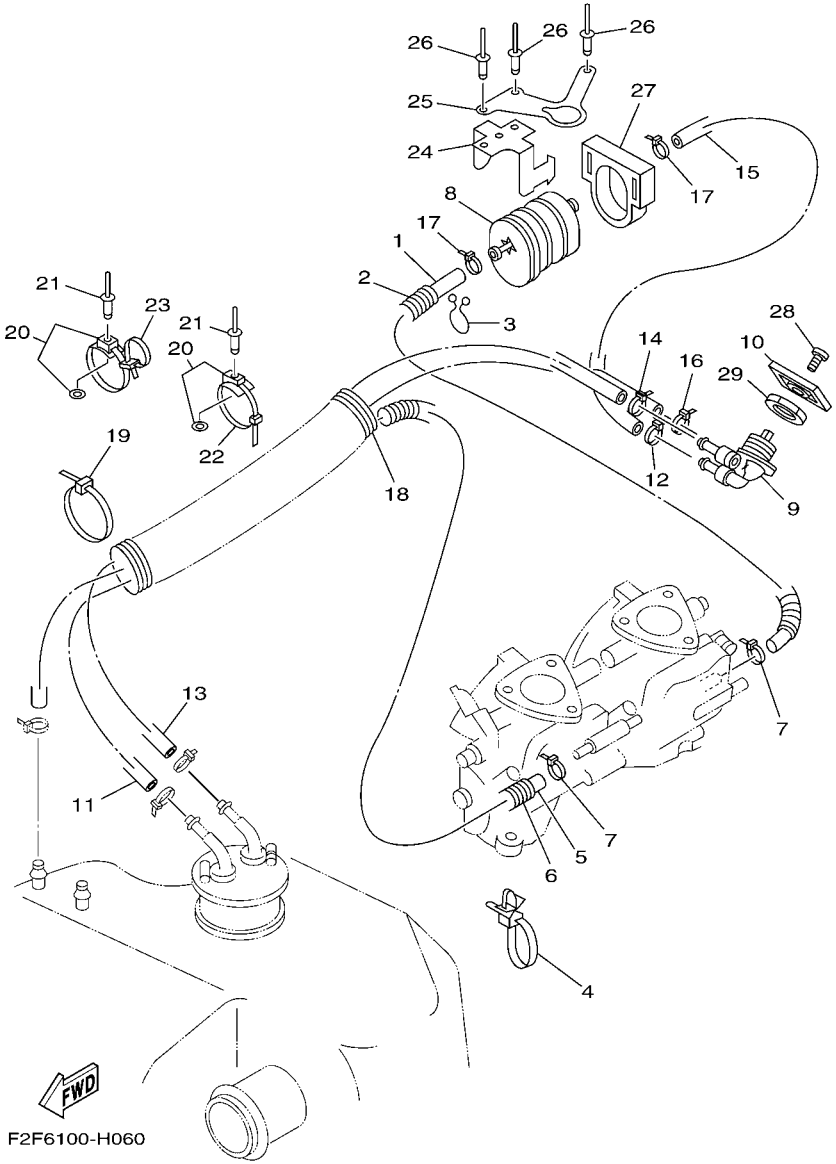


## FIG. 6 FUEL

| REF. NO. | PART NO. | DESCRIPTION | EUR | GENE | | | | REMARKS |
|---|---|---|---|---|---|---|---|---|
| 28 | 98980–04008 | SCREW, BIND | 1 | 1 | | | | |
| 29 | 90170–22187 | NUT | 1 | 1 | | | | |

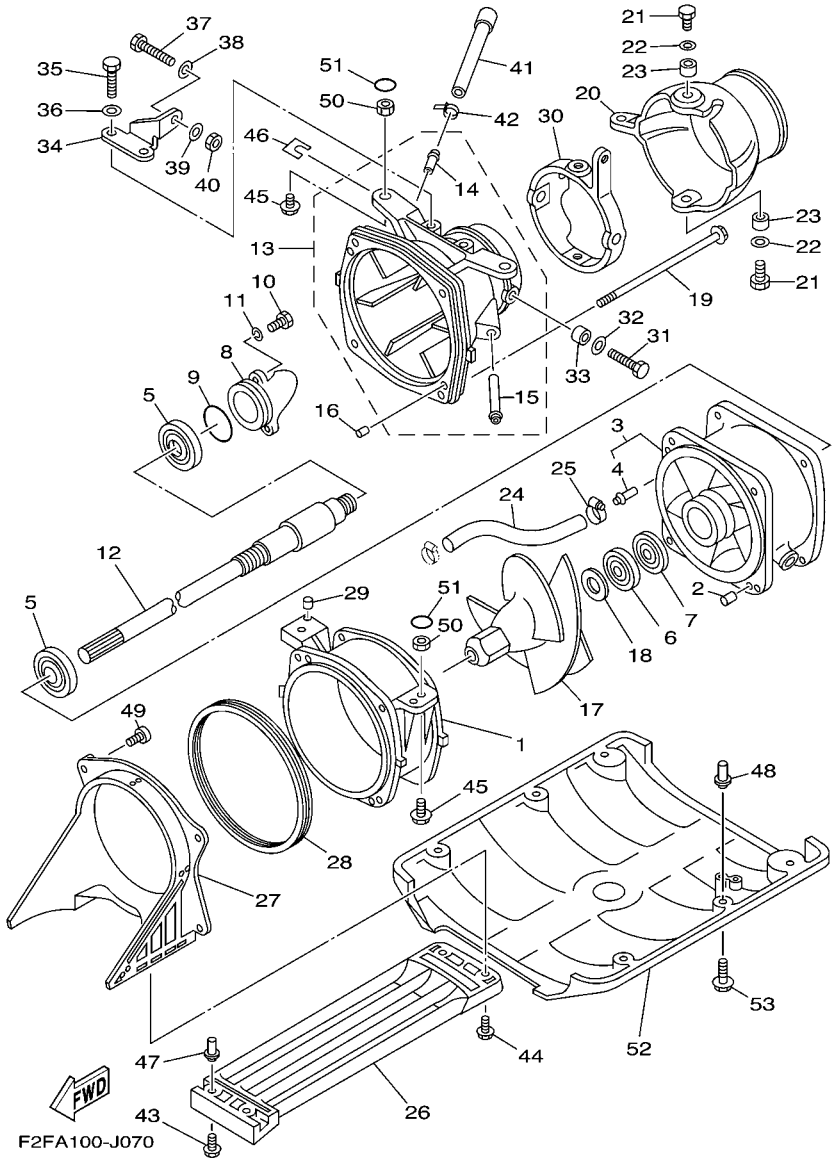


## FIG. 7 JET UNIT 1

| REF. NO. | PART NO. | DESCRIPTION | EUR | GENE | | | | REMARKS |
|---|---|---|---|---|---|---|---|---|
| 1 | 6R7–51312–03–94 | HOUSING, IMPELLER | 1 | 1 | | | | |
| 2 | 93606–12019 | PIN, DOWEL | 2 | 2 | | | | |
| 3 | 62T–51315–01–94 | DUCT, IMPELLER | 1 | 1 | | | | |
| 4 | 6K8–51129–00 | .NIPPLE | 1 | 1 | | | | |
| 5 | 93306–205U0 | BEARING | 2 | 2 | | | | |
| 6 | 93102–25M34 | OIL SEAL | 1 | 1 | | | | |
| 7 | 93101–25M50 | OIL SEAL | 1 | 1 | | | | |
| 8 | 62T–51326–00 | CAP | 1 | 1 | | | | |
| 9 | 93210–46M16 | O-RING | 1 | 1 | | | | |
| 10 | 97095–06020 | BOLT | 3 | 3 | | | | |
| 11 | 92995–06600 | WASHER | 3 | 3 | | | | |
| 12 | 6BA–45511–00 | SHAFT, DRIVE | 1 | 1 | | | | |
| 13 | 64R–51318–01–94 | NOZZLE | 1 | 1 | | | | |
| 14 | 6K8–51129–00 | .NIPPLE | 1 | 1 | | | | |
| 15 | 62T–51129–00 | .NIPPLE | 1 | 1 | | | | |
| 16 | 93606–12019 | PIN, DOWEL | 2 | 2 | | | | |
| 17 | 6BA–51321–00 | IMPELLER | 1 | 1 | | | | |
| 18 | 62T–51348–00 | SPACER | 1 | 1 | | | | |
| 19 | 90119–06M70 | BOLT, WITH WASHER | 4 | 4 | | | | |
| 20 | 6BA–51313–00 | NOZZLE, DEFLECTOR | 1 | 1 | | | | |
| 21 | 97095–08020 | BOLT | 2 | 2 | | | | |
| 22 | 92995–08600 | WASHER | 2 | 2 | | | | |
| 23 | 90387–08M06 | COLLAR | 2 | 2 | | | | |
| 24 | 90445–14M12 | HOSE (L110) | 1 | 1 | | | | |
| 25 | 90450–14M05 | HOSE CLAMP ASSY | 1 | 1 | | | | |
| 26 | 6R7–51333–00 | SCREEN, INTAKE | 1 | 1 | | | | |
| 27 | 6R7–51311–00 | DUCT, INTAKE | 1 | 1 | | | | |

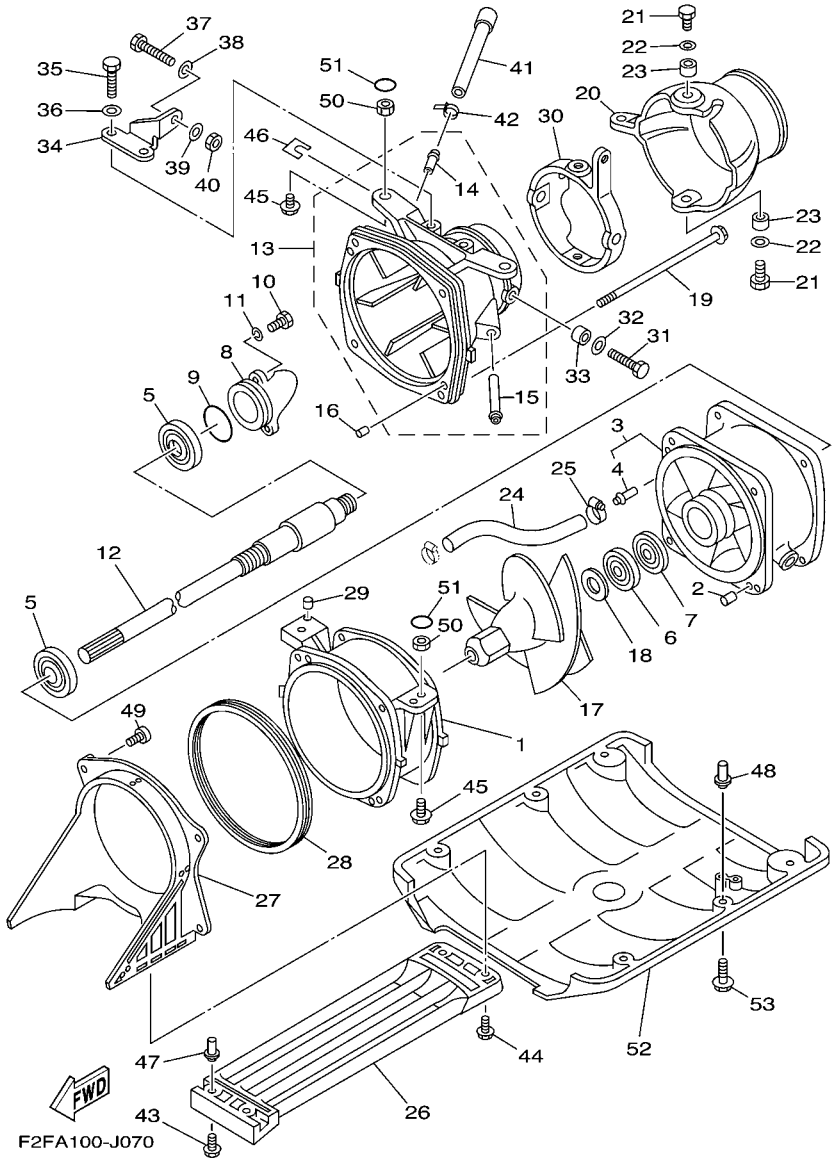


## FIG. 7 JET UNIT 1

| REF. NO. | PART NO. | DESCRIPTION | EUR | GENE | | | | REMARKS |
|---|---|---|---|---|---|---|---|---|
| 28 | 6R7–51117–01 | PACKING | 1 | 1 | | | | |
| 29 | 93606–07M17 | PIN, DOWEL | 2 | 2 | | | | |
| 30 | 62T–51190–01–94 | RING,TRIM | 1 | 1 | | | | |
| 31 | 97095–08018 | BOLT | 2 | 2 | | | | |
| 32 | 92995–08600 | WASHER | 2 | 2 | | | | |
| 33 | 90387–08M08 | COLLAR | 2 | 2 | | | | |
| 34 | 6BA–51387–00 | STAY | 1 | 1 | | | | |
| 35 | 97095–06014 | BOLT | 2 | 2 | | | | |
| 36 | 92995–06600 | WASHER | 2 | 2 | | | | |
| 37 | 97095–06020 | BOLT | 1 | 1 | | | | |
| 38 | 92995–06600 | WASHER | 1 | 1 | | | | |
| 39 | 90201–06M31 | WASHER, PLATE | 1 | 1 | | | | |
| 40 | 95380–06700 | NUT | 1 | 1 | | | | |
| 41 | 6BA–51673–00 | PIPE 1 | 1 | 1 | | | | |
| 42 | 90465–11M10 | CLAMP | 1 | 1 | | | | |
| 43 | 90119–06915 | BOLT, WITH WASHER | 2 | 2 | | | | |
| 44 | 90119–06908 | BOLT, WITH WASHER | 2 | 2 | | | | |
| 45 | 90119–10948 | BOLT, WITH WASHER | 4 | 4 | | | | |
| 46 | EW2–67354–00–01 | SHIM (T=0.1) | 10 | 10 | | | | UR |
| | EW2–67354–00–03 | SHIM (T=0.3) | 10 | 10 | | | | UR |
| | EW2–67354–00–05 | SHIM (T=0.5) | 10 | 10 | | | | UR |
| | EW2–67354–00–10 | SHIM (T=1.0) | 10 | 10 | | | | UR |
| 47 | 90179–06947 | NUT | 2 | 2 | | | | |
| 48 | 90179–08962 | NUT | 4 | 4 | | | | |
| 49 | 97780–60120 | SCREW, TAPPING | 4 | 4 | | | | |
| 50 | 90179–10925 | NUT | 4 | 4 | | | | |
| 51 | EW2–62723–30 | SEAL | 4 | 4 | | | | |

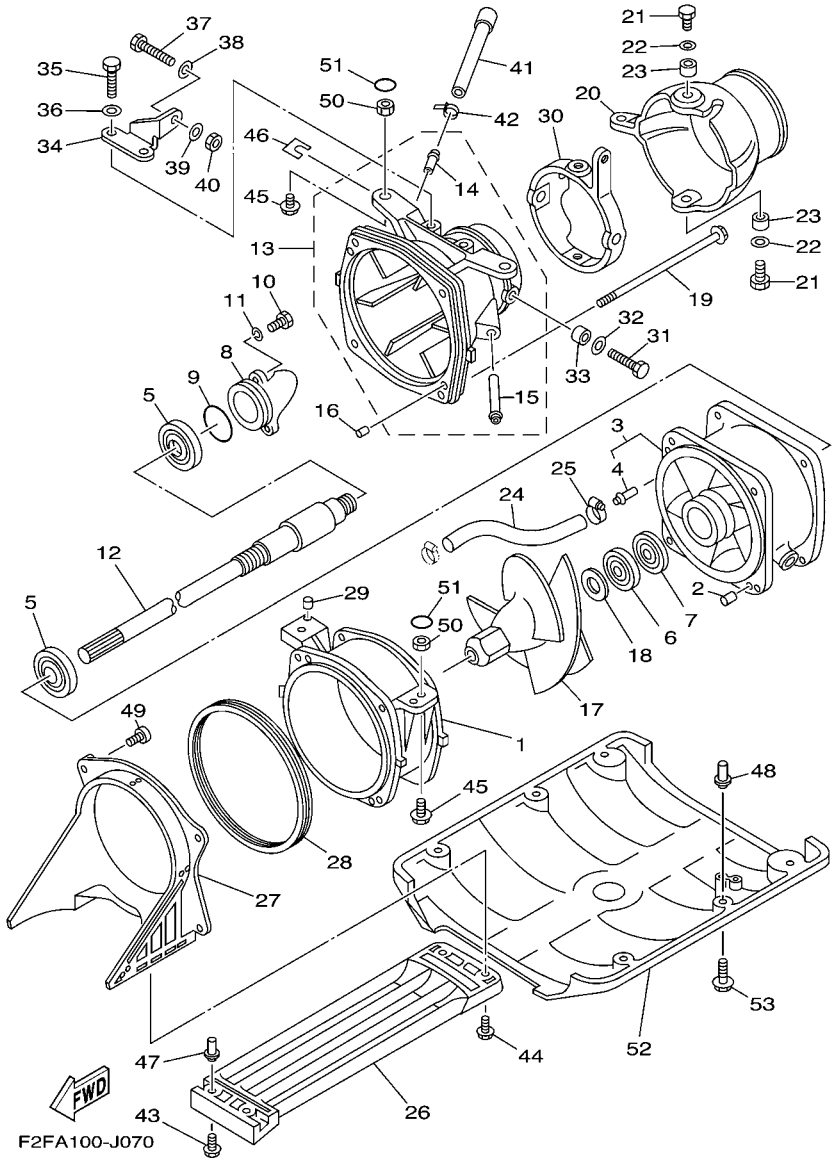


## FIG. 7 JET UNIT 1

| REF. NO. | PART NO. | DESCRIPTION | EUR | GENE | | | | REMARKS |
|---|---|---|---|---|---|---|---|---|
| 52 | F2F–6273B–00 | PLATE 2 | 1 | 1 | | | | |
| 53 | 90119–08943 | BOLT, WITH WASHER | 4 | 4 | | | | |

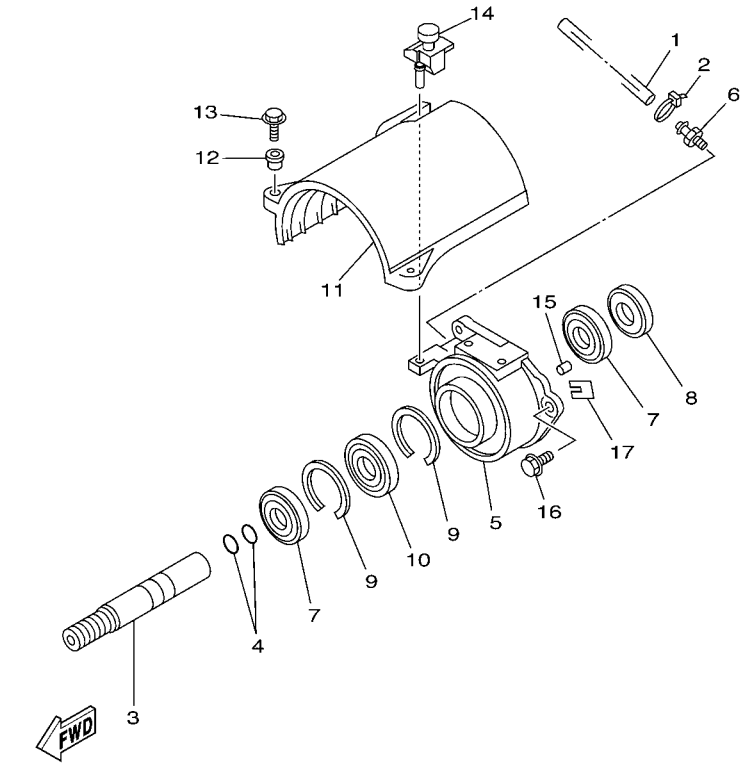

GM6H100-0080

## FIG. 8 JET UNIT 2

| REF. NO. | PART NO. | DESCRIPTION | EUR | GENE | | | | REMARKS |
|---|---|---|---|---|---|---|---|---|
| 1 | 90445–09M17 | HOSE (L320) | 1 | 1 | | | | |
| 2 | 90465–11M10 | CLAMP | 1 | 1 | | | | |
| 3 | 6R7–51323–02 | SHAFT, COUPLER | 1 | 1 | | | | |
| 4 | 93210–17MA4 | O-RING | 2 | 2 | | | | |
| 5 | 61X–45332–03–94 | HOUSING, BEARING | 1 | 1 | | | | |
| 6 | 61L–45378–00 | NIPPLE, HOSE | 1 | 1 | | | | |
| 7 | 93101–25M55 | OIL SEAL | 2 | 2 | | | | |
| 8 | 93101–25M56 | OIL SEAL | 1 | 1 | | | | |
| 9 | 93430–47M04 | CIRCLIP | 2 | 2 | | | | |
| 10 | 93306–205U6 | BEARING | 1 | 1 | | | | |
| 11 | 61X–51381–00 | COVER | 1 | 1 | | | | |
| 12 | 90387–06M60 | COLLAR | 2 | 2 | | | | |
| 13 | 97595–06525 | BOLT, WITH WASHER | 2 | 2 | | | | |
| 14 | 90480–06M69 | GROMMET | 1 | 1 | | | | |
| 15 | 93606–12019 | PIN, DOWEL | 2 | 2 | | | | |
| 16 | 90119–08907 | BOLT, WITH WASHER | 3 | 3 | | | | |
| 17 | GD0–67249–00–05 | SHIM (T=0.5) | 1 | 1 | | | | UR |
| | GD0–67249–00–10 | SHIM (T=1.0) | 1 | 1 | | | | UR |

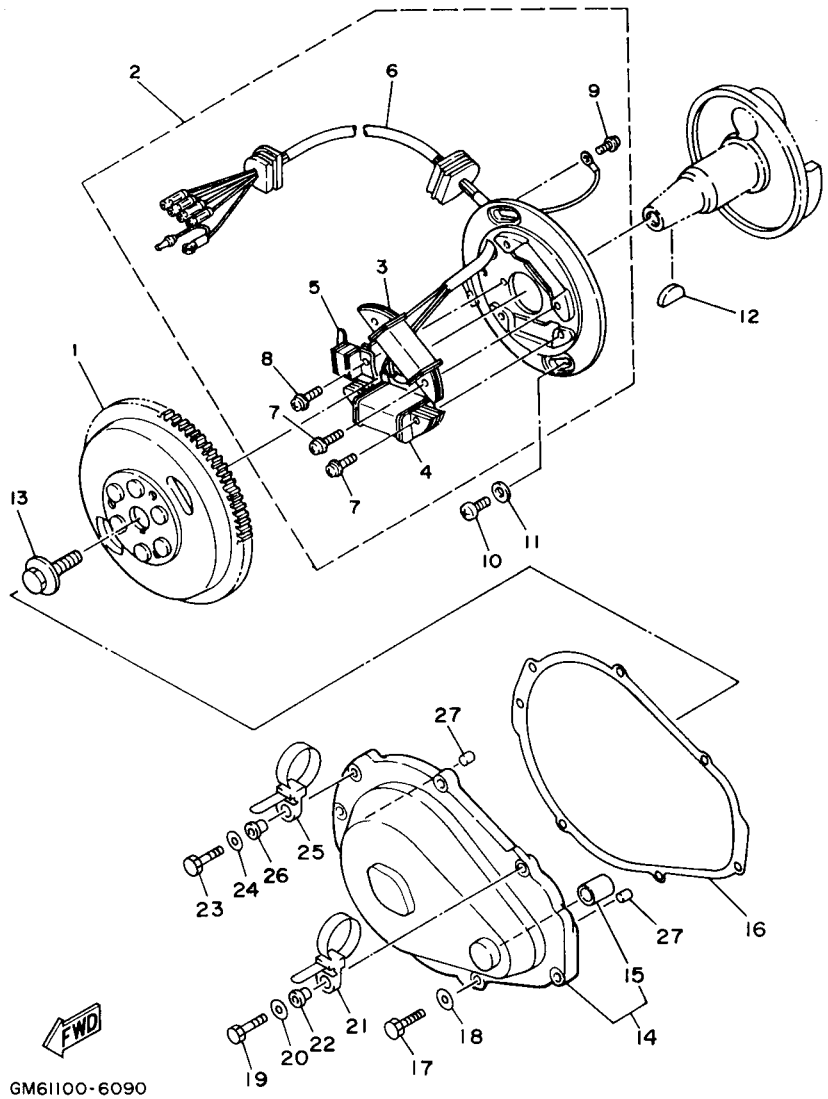


## FIG. 9 GENERATOR

| REF. NO. | PART NO. | DESCRIPTION | EUR | GENE | | | | REMARKS |
|---|---|---|---|---|---|---|---|---|
| 1 | 62T–85550–00 | ROTOR ASSY | 1 | 1 | | | | |
| 2 | 62T–85560–00 | BASE ASSY | 1 | 1 | | | | |
| 3 | 62T–85520–01 | .COIL, CHARGE | 1 | 1 | | | | |
| 4 | 62T–85533–00 | .COIL, LIGHTING | 1 | 1 | | | | |
| 5 | 6M6–85580–00 | .COIL, PULSER | 1 | 1 | | | | |
| 6 | 62T–85515–00 | .LEAD WIRE ASSY | 1 | 1 | | | | |
| 7 | 97902–05125 | .SCREW, WITH WASHER | 4 | 4 | | | | |
| 8 | 97902–04122 | .SCREW, WITH WASHER | 2 | 2 | | | | |
| 9 | 97802–04008 | .SCREW, PAN HEAD | 1 | 1 | | | | |
| 10 | 97880–06016 | SCREW, PAN HEAD | 2 | 2 | | | | |
| 11 | 92990–06600 | WASHER, PLATE | 2 | 2 | | | | |
| 12 | 90280–05013 | KEY, WOODRUFF | 1 | 1 | | | | |
| 13 | 90109–10M44 | BOLT | 1 | 1 | | | | |
| 14 | 6M6–81337–00–8S | COVER, FLYWHEEL | 1 | 1 | | | | |
| 15 | 90380–12M29 | .BUSH, SOLID | 1 | 1 | | | | |
| 16 | 6M6–81365–A0 | GASKET, HOLE COVER | 1 | 1 | | | | |
| 17 | 97095–06025 | BOLT | 5 | 5 | | | | |
| 18 | 92995–06600 | WASHER | 5 | 5 | | | | |
| 19 | 97095–06035 | BOLT | 1 | 1 | | | | |
| 20 | 92995–06600 | WASHER | 1 | 1 | | | | |
| 21 | 90465–12M53 | CLAMP | 1 | 1 | | | | |
| 22 | 90387–06M05 | COLLAR | 1 | 1 | | | | |
| 23 | 97095–06035 | BOLT | 1 | 1 | | | | |
| 24 | 92995–06600 | WASHER | 1 | 1 | | | | |
| 25 | 90465–12M53 | CLAMP | 1 | 1 | | | | |
| 26 | 90387–06M05 | COLLAR | 1 | 1 | | | | |
| 27 | 93606–12019 | PIN, DOWEL | 2 | 2 | | | | |

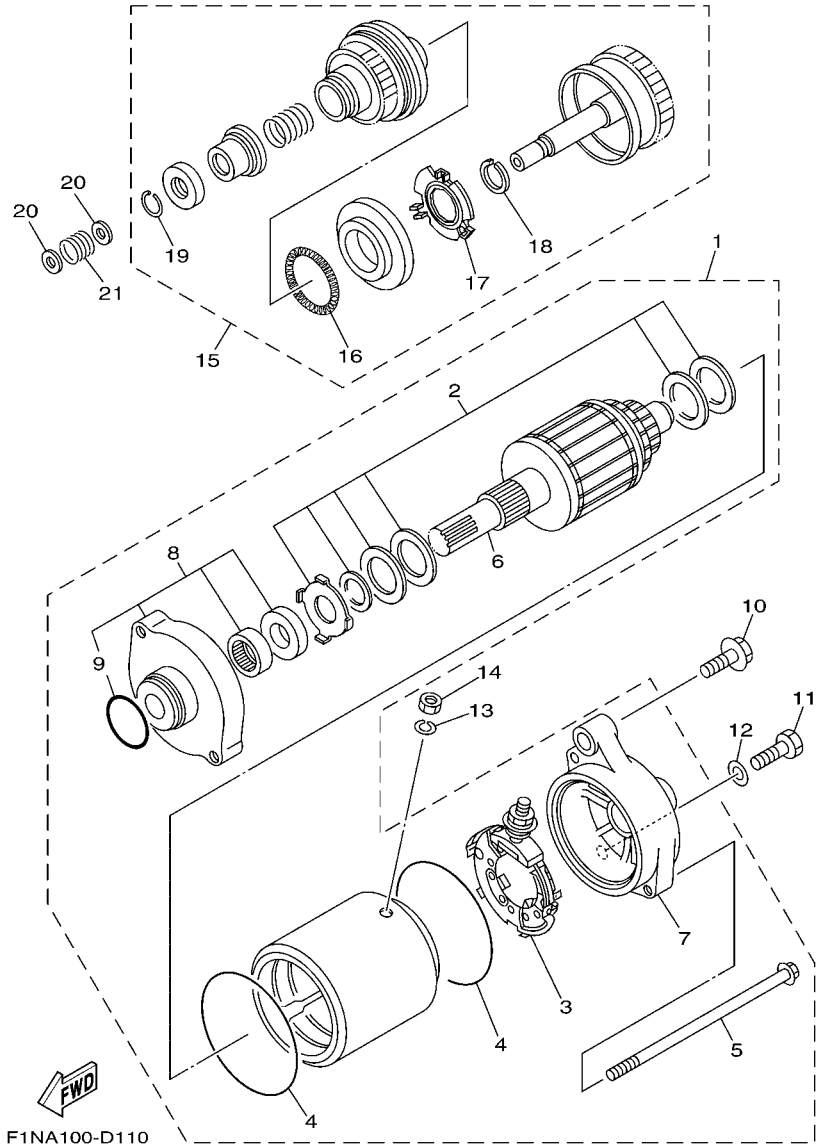


## FIG. 10 STARTING MOTOR

| REF. NO. | PART NO. | DESCRIPTION | EUR | GENE | | | | REMARKS |
|---|---|---|---|---|---|---|---|---|
| 1 | 6M6–81800–10 | STARTING MOTOR ASSY | 1 | 1 | | | | |
| 2 | 3AJ–81809–00 | .WASHER KIT | 1 | 1 | | | | |
| 3 | 6M6–81840–10 | .BRUSH HOLDER ASSY | 1 | 1 | | | | |
| 4 | 11H–81844–00 | .GASKET | 2 | 2 | | | | |
| 5 | 6M6–81826–00 | .BOLT | 2 | 2 | | | | |
| 6 | 6M6–81850–00 | .ARMATURE ASSY | 1 | 1 | | | | |
| 7 | 6M6–81820–00 | .REAR BRACKET ASSY | 1 | 1 | | | | |
| 8 | 6M6–81830–00 | .FRONT BRACKET ASSY | 1 | 1 | | | | |
| 9 | 26H–81847–00 | ..O-RING | 1 | 1 | | | | |
| 10 | 97513–08540 | BOLT, WITH WASHER | 1 | 1 | | | | |
| 11 | 97013–08035 | BOLT | 1 | 1 | | | | |
| 12 | 92903–08600 | WASHER, PLATE | 1 | 1 | | | | |
| 13 | 92990–06100 | WASHER, SPRING | 1 | 1 | | | | |
| 14 | 95380–06700 | NUT | 1 | 1 | | | | |
| 15 | 6M6–8183E–01 | IDLE GEAR COMP. | 1 | 1 | | | | |
| 16 | 6M6–81866–00 | .WEIGHT SPRING | 1 | 1 | | | | |
| 17 | 6M6–81865–00 | .WEIGHT HOLDER | 1 | 1 | | | | |
| 18 | 93440–25M08 | .CIRCLIP | 1 | 1 | | | | |
| 19 | 93450–18M06 | .CIRCLIP | 1 | 1 | | | | |
| 20 | 92903–06600 | WASHER, PLATE | 2 | 2 | | | | |
| 21 | 90501–14M73 | SPRING, COMPRESSION | 1 | 1 | | | | |

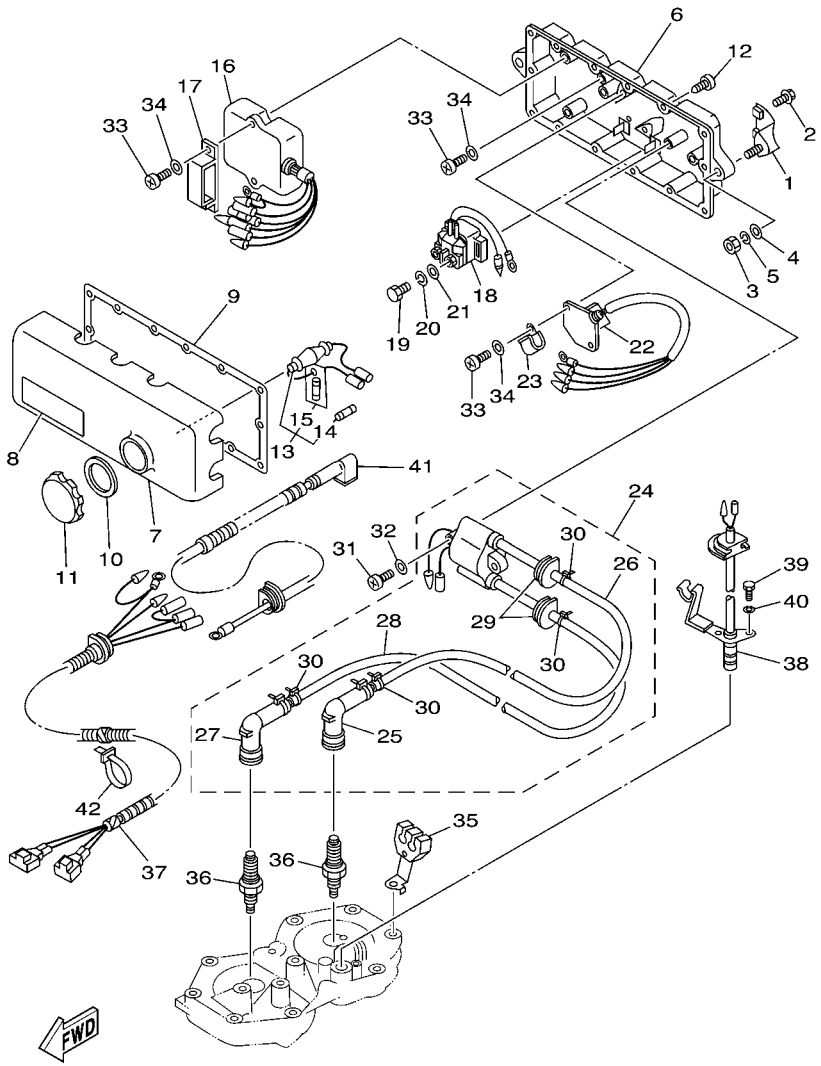


F2FA100-J110

## FIG. 11 ELECTRICAL 1

| REF. NO. | PART NO. | DESCRIPTION | EUR | GENE | | | | REMARKS |
|---|---|---|---|---|---|---|---|---|
| 1 | EW2–68156–00 | BRACKET, ELECTRIC BOX | 2 | 2 | | | | |
| 2 | 90119–06908 | BOLT, WITH WASHER | 4 | 4 | | | | |
| 3 | 95380–08600 | NUT | 2 | 2 | | | | |
| 4 | 92990–08200 | WASHER, PLAIN | 2 | 2 | | | | |
| 5 | 92990–08100 | WASHER, SPRING | 2 | 2 | | | | |
| 6 | 6M6–8552A–01–8P | HOUSING | 1 | 1 | | | | |
| 7 | 6M6–8552E–01 | COVER, CASE | 1 | 1 | | | | |
| 8 | 6B6–83623–00 | MARK 3 | 1 | 1 | | | | |
| 9 | 6M6–81921–00 | GASKET, TERMINAL | 1 | 1 | | | | |
| 10 | 6M6–81844–00 | GASKET | 1 | 1 | | | | |
| 11 | 6M6–8132W–00 | CAP | 1 | 1 | | | | |
| 12 | 97780–60525 | SCREW, TAPPING | 14 | 14 | | | | |
| 13 | 6K8–82150–01 | FUSE HOLDER ASSY | 1 | 1 | | | | |
| 14 | 6G1–82151–00 | .FUSE (10A) | 1 | 1 | | | | |
| 15 | 6K8–82159–00 | .FUSE SPEAR (10A) | 1 | 1 | | | | |
| 16 | 62T–85540–01 | C.D.I. UNIT ASSY | 1 | 1 | | | | |
| 17 | 90464–06M29 | CLAMP | 1 | 1 | | | | |
| 18 | 68N–81940–00 | STARTER RELAY ASSY | 1 | 1 | | | | |
| 19 | 97095–06010 | BOLT | 2 | 2 | | | | |
| 20 | 92995–06100 | WASHER, SPRING | 2 | 2 | | | | |
| 21 | 92995–06600 | WASHER | 2 | 2 | | | | |
| 22 | 6M6–81960–A0 | RECTIFIER & REGULATOR ASSY | 1 | 1 | | | | |
| 23 | 90465–06M86 | CLAMP | 1 | 1 | | | | |
| 24 | 62E–85570–11 | IGNITION COIL ASSY | 1 | 1 | | | | |
| 25 | 62E–82371–11 | .CAP, PLUG | 1 | 1 | | | | |
| 26 | 62E–82351–01 | .TUBE, CORD | 1 | 1 | | | | |
| 27 | 62E–82371–11 | .CAP, PLUG | 1 | 1 | | | | |

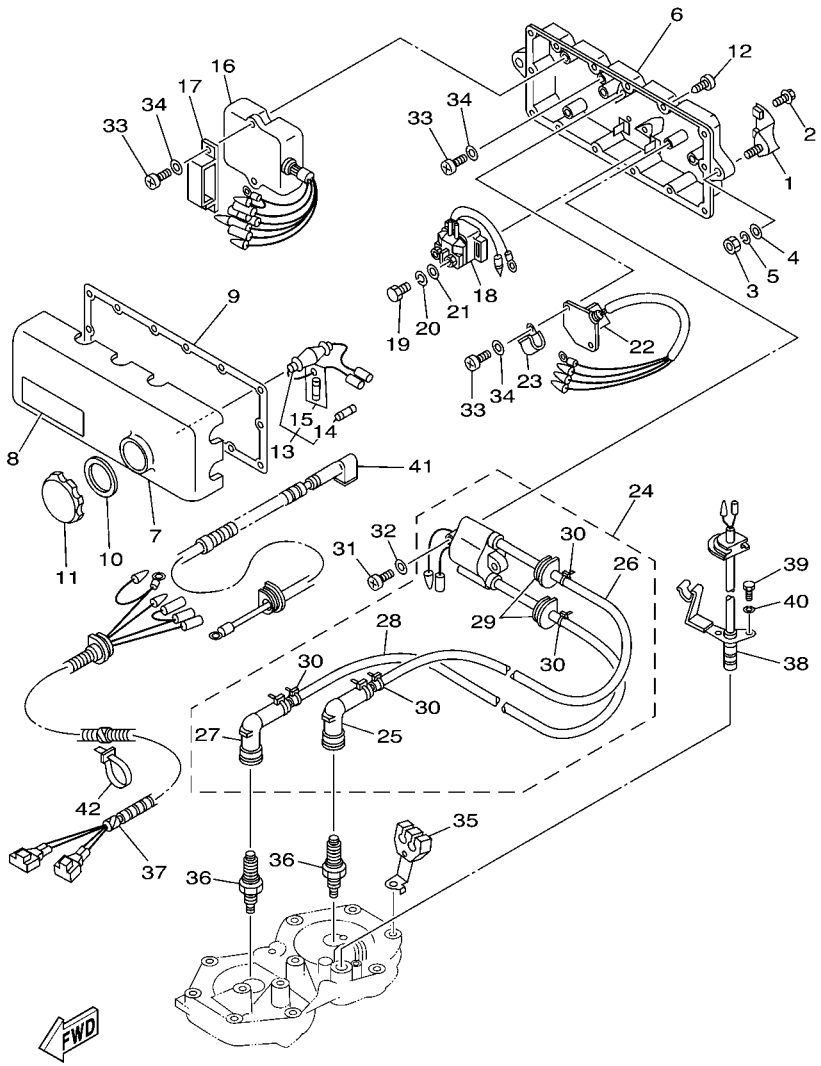


F2FA100-J110

## FIG. 11 ELECTRICAL 1

| REF. NO. | PART NO. | DESCRIPTION | EUR | GENE | | | | REMARKS |
|---|---|---|---|---|---|---|---|---|
| 28 | 62E–82352–01 | .TUBE, CORD 2 | 1 | 1 | | | | |
| 29 | 90480–06M43 | .GROMMET | 2 | 2 | | | | |
| 30 | 90465–11M10 | .CLAMP | 4 | 4 | | | | |
| 31 | 97880–06030 | SCREW, PAN HEAD | 2 | 2 | | | | |
| 32 | 92990–06600 | WASHER, PLATE | 2 | 2 | | | | |
| 33 | 97880–06016 | SCREW, PAN HEAD | 6 | 6 | | | | |
| 34 | 92990–06600 | WASHER, PLATE | 6 | 6 | | | | |
| 35 | 6R7–82361–01 | CLAMP, CORD | 1 | 1 | | | | |
| 36 | 94702–00272 | PLUG, SPARK (NGK BR7HS) | 2 | 2 | | | | |
| 37 | 6R7–82553–01 | EXTENSION, WIRE LEAD | 1 | 1 | | | | |
| 38 | 6R7–82560–11 | THERMO SWITCH ASSY | 1 | 1 | | | | |
| 39 | 97095–06016 | BOLT | 2 | 2 | | | | |
| 40 | 92995–06100 | WASHER, SPRING | 2 | 2 | | | | |
| 41 | 62E–82117–20 | WIRE, LEAD | 1 | 1 | | | | |
| 42 | 90465–13M11 | CLAMP | 1 | 1 | | | | |

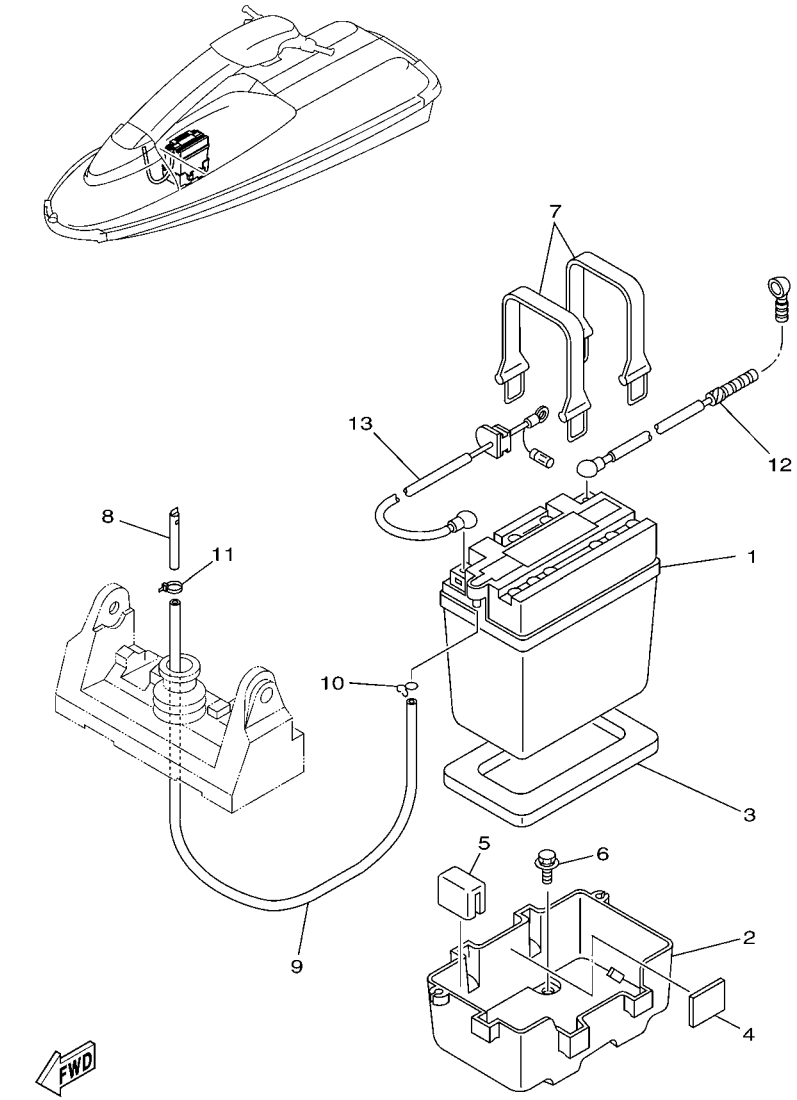


F1NA100-D130

## FIG. 12 ELECTRICAL 2

| REF. NO. | PART NO. | DESCRIPTION | EUR | GENE | | | | REMARKS |
|---|---|---|---|---|---|---|---|---|
| 1 | EU0–82110–09 | BATTERY ASSY (YB16CL-B) | 1 | 1 | | | | YUASA |
| 2 | EW2–68211–00 | CASE, BATTERY | 1 | 1 | | | | |
| 3 | EU0–68221–00 | PAD, BATTERY 1 | 1 | 1 | | | | |
| 4 | EU0–68221–30 | PAD, BATTERY 2 | 3 | 3 | | | | |
| 5 | EW2–68221–00 | PAD, BATTERY | 1 | 1 | | | | |
| 6 | 90119–06920 | BOLT, WITH WASHER | 4 | 4 | | | | |
| 7 | EU0–68218–04 | BAND, BATTERY | 2 | 2 | | | | |
| 8 | EW2–62149–00 | PIPE, VENTILATION 1 | 1 | 1 | | | | |
| 9 | 90699–50085 | HOSE (L850) | 1 | 1 | | | | |
| 10 | 90467–08M10 | CLIP | 1 | 1 | | | | |
| 11 | 90465–11M10 | CLAMP | 1 | 1 | | | | |
| 12 | 64V–82117–00 | WIRE, LEAD | 1 | 1 | | | | |
| 13 | 6R7–82117–11 | WIRE, LEAD | 1 | 1 | | | | |

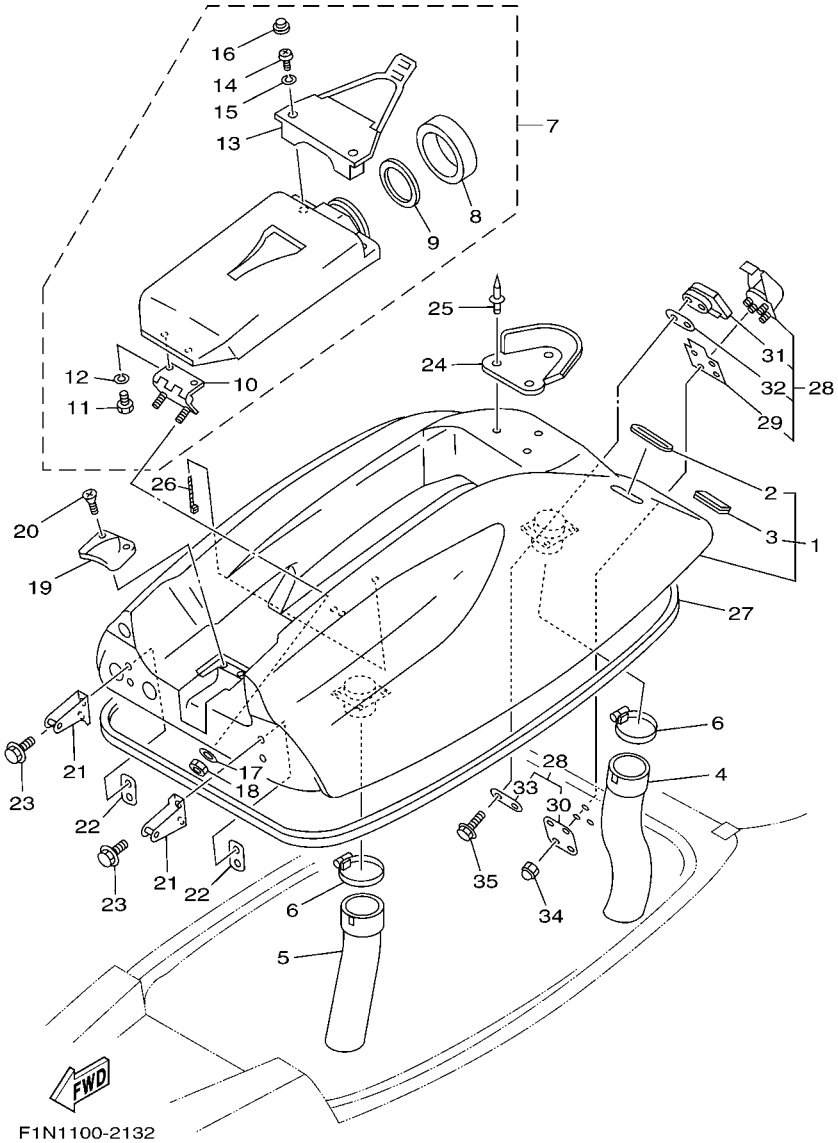


## FIG. 13 ENGINE HATCH

| REF. NO. | PART NO. | DESCRIPTION | EUR | GENE | | | | REMARKS |
|---|---|---|---|---|---|---|---|---|
| 1 | GM6–6516A–10–P1 | ENGINE HATCH COMP. | 1 | 1 | | | | DPBSM |
| 2 | FX1–65116–10 | .TRIM,HATCH 2 | 2 | 2 | | | | |
| 3 | GM6–6516C–00 | .TRIM 1 | 1 | 1 | | | | |
| 4 | GM6–6213F–00 | HOSE,VENTILATOR 1 | 1 | 1 | | | | |
| 5 | EW2–62137–00 | HOSE, VENTILATOR 2 | 1 | 1 | | | | |
| 6 | 90601–16875 | BAND, HOSE 68 | 2 | 2 | | | | |
| 7 | FX1–6591A–10 | CASE,ASSY 1 | 1 | 1 | | | | |
| 8 | EW2–65912–00 | .CAP, CASE | 1 | 1 | | | | |
| 9 | EW2–65913–00 | .PACKING, CASE | 1 | 1 | | | | |
| 10 | FX1–6517D–00 | .HINGE, LID | 1 | 1 | | | | |
| 11 | 97090–06014 | .BOLT | 2 | 2 | | | | |
| 12 | 92990–06100 | .WASHER, SPRING | 2 | 2 | | | | |
| 13 | FX1–6591K–00 | .BAND,CASE | 1 | 1 | | | | |
| 14 | 92580–06016 | .SCREW | 2 | 2 | | | | |
| 15 | 92990–06100 | .WASHER, SPRING | 2 | 2 | | | | |
| 16 | FX1–6514F–00 | .CAP | 2 | 2 | | | | |
| 17 | 92990–06200 | WASHER, PLAIN | 2 | 2 | | | | |
| 18 | 95720–06300 | NUT, SELF-LOCKING | 2 | 2 | | | | |
| 19 | A00–62858–02 | PLATE, HATCH (FL1) | 1 | 1 | | | | |
| 20 | 97780–50316 | SCREW, OVAL HEAD TAPPING | 2 | 2 | | | | |
| 21 | GM6–65136–00 | STOPPER HATCH 2 | 2 | 2 | | | | |
| 22 | EW2–65137–00 | PLATE, STOPPER HATCH 2 | 2 | 2 | | | | |
| 23 | 90119–06900 | BOLT, WITH WASHER | 4 | 4 | | | | |
| 24 | FX1–6514B–00 | DAMPER, POLE | 1 | 1 | | | | |
| 25 | 90267–48938 | RIVET, BLIND | 3 | 3 | | | | |
| 26 | 90464–20258 | CLAMP | 2 | 2 | | | | |
| 27 | GM6–62664–01 | PACKING | 1 | 1 | | | | |

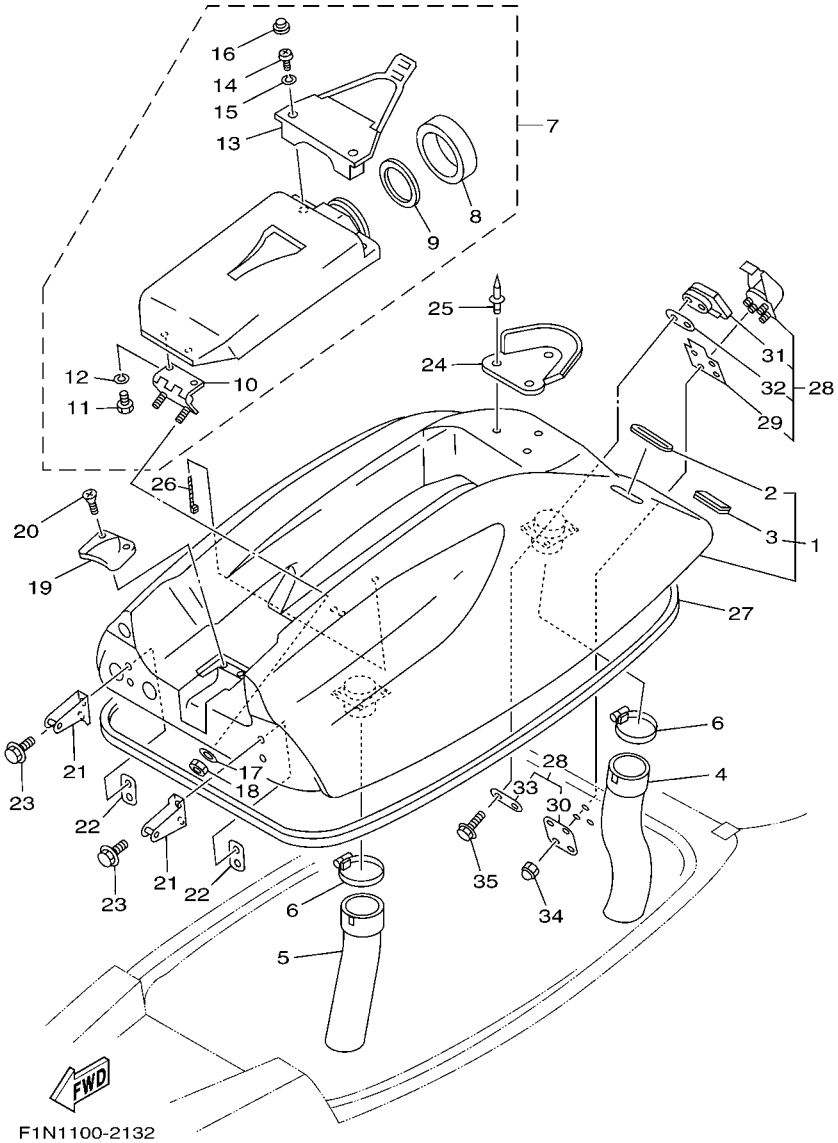


## FIG. 13 ENGINE HATCH

| REF. NO. | PART NO. | DESCRIPTION | EUR | GENE | | | | REMARKS |
|---|---|---|---|---|---|---|---|---|
| 28 | EW2–62840–10 | HATCH LOCK ASSY | 1 | 1 | | | | |
| 29 | EW2–62845–10 | .PACKING, HATCH LOCK | 1 | 1 | | | | |
| 30 | EW2–62846–00 | .PLATE, HATCH LOCK | 1 | 1 | | | | |
| 31 | EW2–62843–00 | .HOOK, HATCH LOCK | 1 | 1 | | | | |
| 32 | EW2–62847–00 | .PACKING, HOOK | 1 | 1 | | | | |
| 33 | EW2–62848–00 | .PLATE, HOOK | 1 | 1 | | | | |
| 34 | 95720–05300 | NUT, FLANGE | 4 | 4 | | | | |
| 35 | 90119–05923 | BOLT, WITH WASHER | 2 | 2 | | | | |

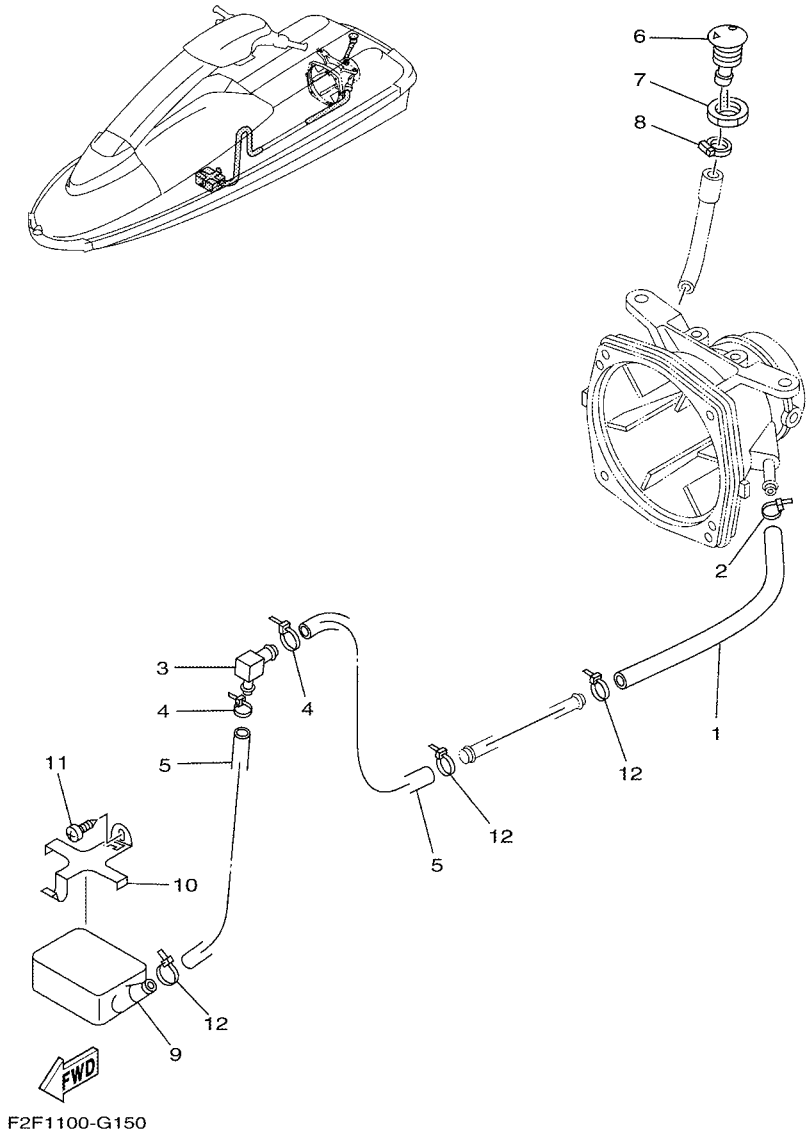


## FIG. 14 HULL & DECK

| REF. NO. | PART NO. | DESCRIPTION | EUR | GENE | | | | REMARKS |
|---|---|---|---|---|---|---|---|---|
| 1 | 90445–14M24 | HOSE (L260) | 1 | 1 | | | | |
| 2 | 90465–11M10 | CLAMP | 1 | 1 | | | | |
| 3 | 6K8–51162–00 | JOINT, HOSE | 1 | 1 | | | | |
| 4 | 90465–13M11 | CLAMP | 2 | 2 | | | | |
| 5 | 90445–14M04 | HOSE (L450) | 2 | 2 | | | | |
| 6 | FN8–6269B–00 | SPOUT | 1 | 1 | | | | |
| 7 | EU0–61652–00 | NUT | 1 | 1 | | | | |
| 8 | 90600–91755 | CLIP | 1 | 1 | | | | |
| 9 | EU0–67613–00 | STRAINER | 1 | 1 | | | | |
| 10 | EW2–67618–00 | BASE, STRAINER BLIGE | 1 | 1 | | | | |
| 11 | 97780–50114 | SCREW, PAN HEAD TAPPING | 1 | 1 | | | | |
| 12 | 90465–13M11 | CLAMP | 3 | 3 | | | | |

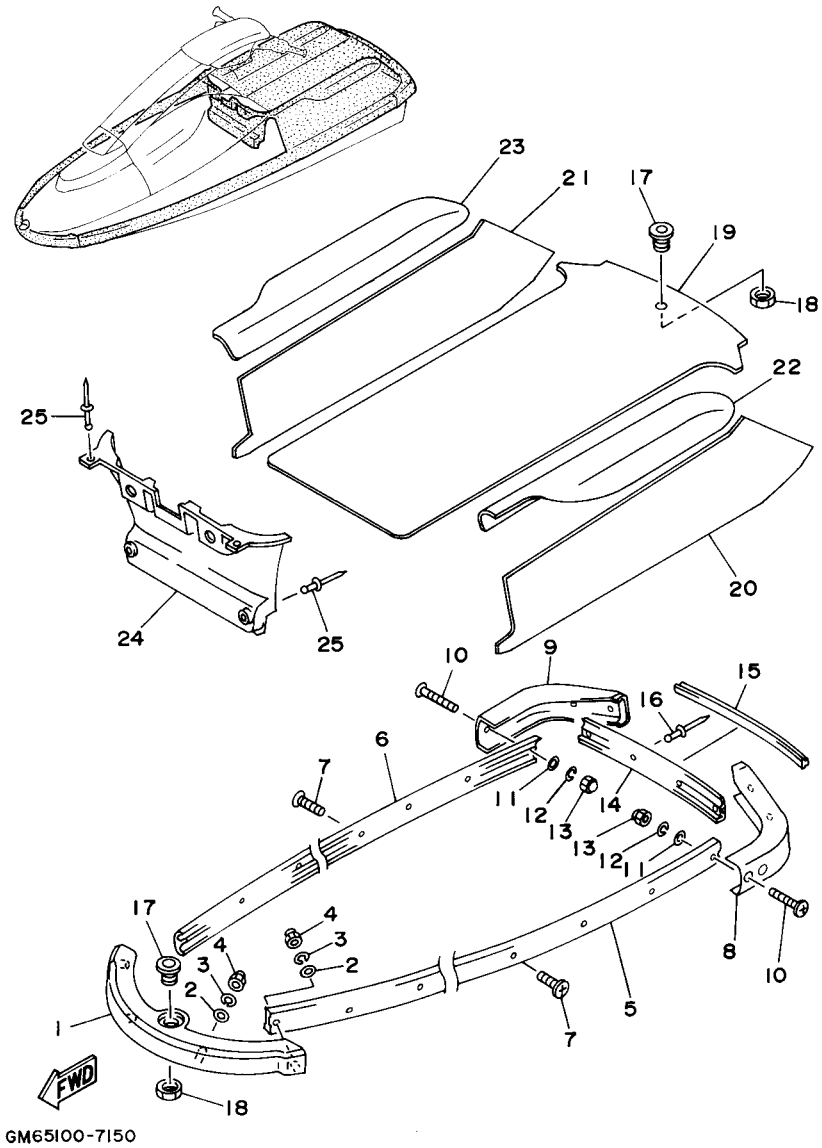


## FIG. 15 GUNWALE & MAT

| REF. NO. | PART NO. | DESCRIPTION | EUR | GENE | | | | REMARKS |
|---|---|---|---|---|---|---|---|---|
| 1 | GM6–62501–10 | BOW GUNWALE COMP. | 1 | 1 | | | | BLACK |
| 2 | 92990–06200 | WASHER, PLAIN | 4 | 4 | | | | |
| 3 | 92990–06100 | WASHER, SPRING | 4 | 4 | | | | |
| 4 | 95380–06800 | NUT | 4 | 4 | | | | |
| 5 | GM6–62552–10 | GUNWALE,SIDE 1 | 1 | 1 | | | | BLACK |
| 6 | GM6–62553–10 | GUNWALE, SIDE 2 | 1 | 1 | | | | BLACK |
| 7 | 90149–05962 | SCREW | 22 | 22 | | | | |
| 8 | GM6–6251D–10 | GUNWALE, STERN 1 | 1 | 1 | | | | YAMAHA BLACK |
| 9 | GM6–6251E–10 | GUNWALE, STERN 2 | 1 | 1 | | | | YAMAHA BLACK |
| 10 | 90149–05960 | SCREW | 8 | 8 | | | | |
| 11 | 92990–05200 | WASHER, PLAIN | 8 | 8 | | | | |
| 12 | 92990–05100 | WASHER, SPRING | 8 | 8 | | | | |
| 13 | 90179–05964 | NUT | 8 | 8 | | | | |
| 14 | GM6–6252C–10 | COVER, GUNWALE 1 | 1 | 1 | | | | BLACK |
| 15 | GM6–6252D–10 | COVER, GUNWALE 2 | 1 | 1 | | | | BLACK |
| 16 | 90267–48932 | RIVET, BLIND | 4 | 4 | | | | |
| 17 | FN8–61651–01 | ROPE HOLE | 2 | 2 | | | | |
| 18 | EU0–61652–00 | NUT | 2 | 2 | | | | |
| 19 | F2F–6351B–00 | MAT,LOWER | 1 | 1 | | | | BLACK |
| 20 | GM6–6351C–00 | MAT, SIDE 1 | 1 | 1 | | | | BLACK |
| 21 | GM6–6351D–00 | MAT,SIDE 2 | 1 | 1 | | | | BLACK |
| 22 | GM6–6521C–10 | PAD 1 | 1 | 1 | | | | BLACK |
| 23 | GM6–6521D–10 | PAD 2 | 1 | 1 | | | | BLACK |
| 24 | GM6–6351E–10 | MAT,BOW | 1 | 1 | | | | YAMAHA BLACK |
| 25 | 90267–48963 | RIVET, BLIND | 4 | 4 | | | | |

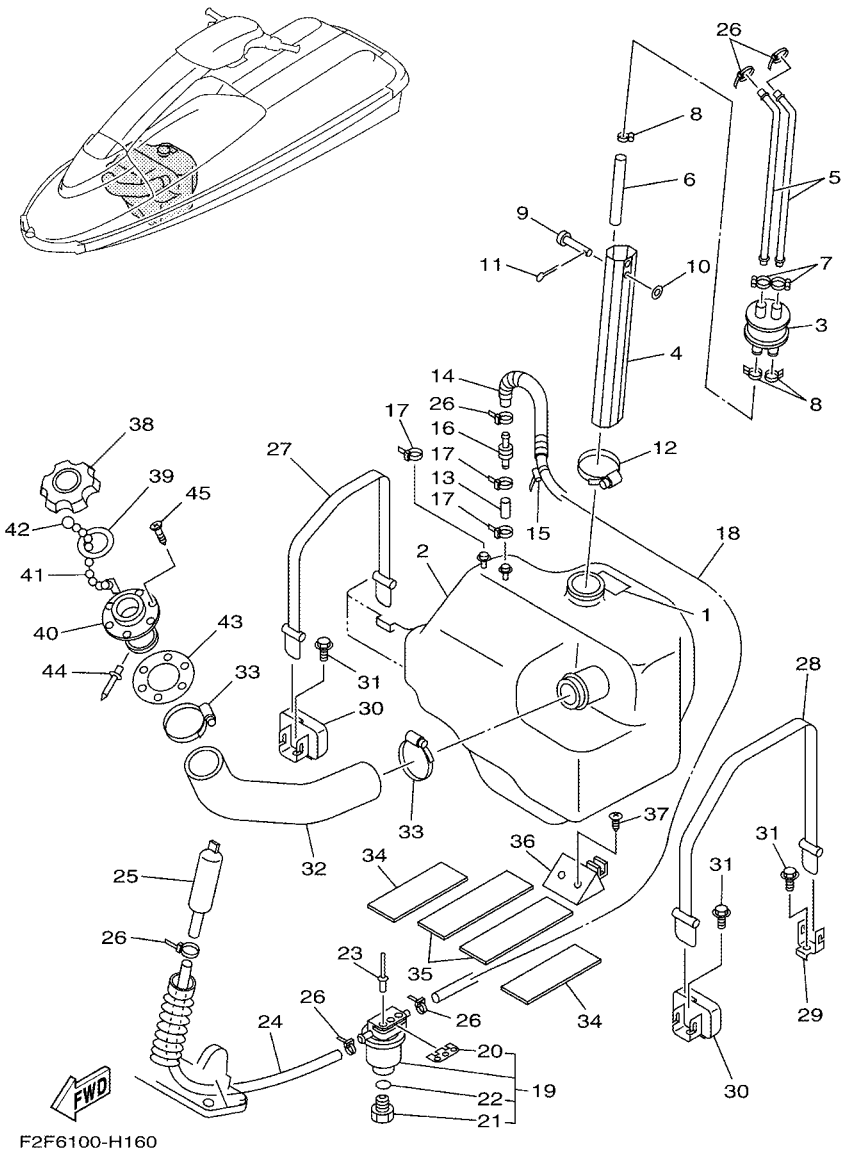


## FIG. 16 FUEL TANK

| REF. NO. | PART NO. | DESCRIPTION | EUR | GENE | | | | REMARKS |
|---|---|---|---|---|---|---|---|---|
| 1 | GM6–6418D–00 | LABEL,FUEL TANK | 1 | 1 | | | | |
| 2 | EW2–67711–01 | TANK, FUEL | 1 | 1 | | | | |
| 3 | FJ0–67713–00 | PIPE, JOINT | 1 | 1 | | | | |
| 4 | EW2–67716–02 | PIPE, FILLER | 1 | 1 | | | | |
| 5 | EW2–67714–02 | PIPE, SUCTION 3 | 2 | 2 | | | | |
| 6 | 90445–11055 | HOSE (L95) | 1 | 1 | | | | |
| 7 | 90601–11062 | BAND, HOSE 11 | 2 | 2 | | | | |
| 8 | 90467–11032 | CLIP | 3 | 3 | | | | |
| 9 | 91790–05040 | PIN, CLEVIS | 1 | 1 | | | | |
| 10 | 92990–05600 | WASHER, PLATE | 1 | 1 | | | | |
| 11 | 91490–16010 | PIN. COTTER | 1 | 1 | | | | |
| 12 | 90601–16274 | BAND, HOSE 62 | 1 | 1 | | | | |
| 13 | 90699–50003 | HOSE | 1 | 1 | | | | |
| 14 | 90446–14M30 | TUBE (L120) | 1 | 1 | | | | |
| 15 | 90465–13M11 | CLAMP | 1 | 1 | | | | |
| 16 | EU0–67767–31 | CHECK VALVE | 1 | 1 | | | | |
| 17 | 90465–11M10 | CLAMP | 3 | 3 | | | | |
| 18 | 90699–50120 | HOSE | 1 | 1 | | | | |
| 19 | F2F–6214A–00 | FILTER, VENT ASSY | 1 | 1 | | | | |
| 20 | EW2–62142–00 | .PLATE, FILTER | 1 | 1 | | | | |
| 21 | 70R–24543–00 | .PLUG, DRAIN | 1 | 1 | | | | |
| 22 | 70R–24489–00 | .O-RING | 1 | 1 | | | | |
| 23 | 90267–48925 | RIVET, BLIND | 2 | 2 | | | | |
| 24 | 90699–50045 | HOSE | 1 | 1 | | | | |
| 25 | EW2–62150–00 | PIPE,VENTILATION 3 | 1 | 1 | | | | |
| 26 | 90465–11M10 | CLAMP | 6 | 6 | | | | |
| 27 | EW2–67821–00 | BAND, FUEL TANK | 1 | 1 | | | | |

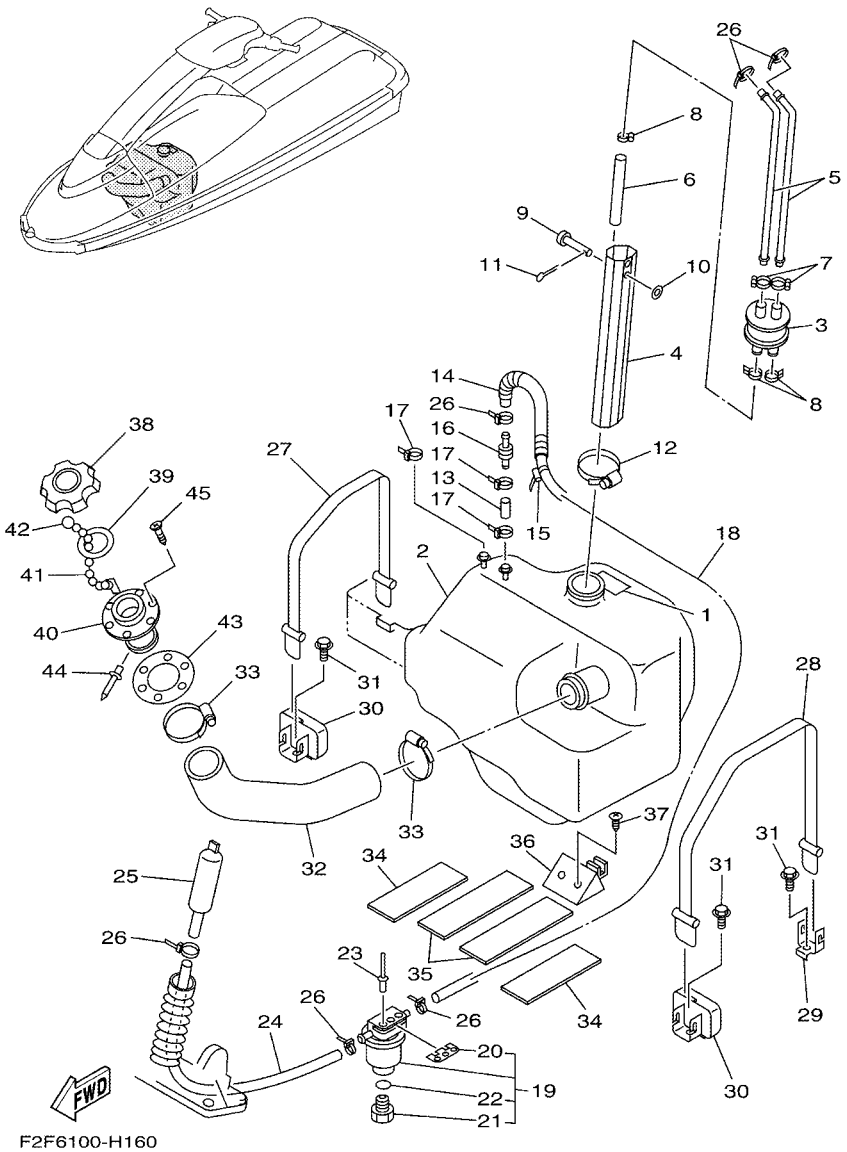


## FIG. 16 FUEL TANK

| REF. NO. | PART NO. | DESCRIPTION | EUR | GENE | | | | REMARKS |
|---|---|---|---|---|---|---|---|---|
| 28 | EW2–67821–30 | BAND, FUEL TANK | 1 | 1 | | | | |
| 29 | EW2–65772–00 | HOOK A | 1 | 1 | | | | |
| 30 | FX1–65760–00 | HOOK B ASSY | 2 | 2 | | | | |
| 31 | 90105–06900 | BOLT, FLANGE | 3 | 3 | | | | |
| 32 | GM6–67844–11 | HOSE | 1 | 1 | | | | |
| 33 | 90601–15573 | BAND, HOSE 55 | 2 | 2 | | | | |
| 34 | GM6–67593–00 | MAT | 2 | 2 | | | | |
| 35 | F2F–6759B–00 | MAT 1 | 2 | 2 | | | | |
| 36 | EW2–67822–01 | DAMPER FUEL TANK | 1 | 1 | | | | |
| 37 | 97780–50114 | SCREW, PAN HEAD TAPPING | 2 | 2 | | | | |
| 38 | FN8–67831–01 | CAP, FUEL FILLER | 1 | 1 | | | | YAMAHA BLACK |
| 39 | EU0–67832–00 | PACKING 1 | 1 | 1 | | | | |
| 40 | FN8–67833–00 | SOCKET | 1 | 1 | | | | |
| 41 | EU0–67835–00 | CHAIN BALL | 1 | 1 | | | | |
| 42 | EU0–67839–00 | COUPLING | 1 | 1 | | | | |
| 43 | EU0–67834–00 | PACKING, FUEL FILLER | 1 | 1 | | | | |
| 44 | 90267–40935 | RIVET, BLIND | 1 | 1 | | | | |
| 45 | EU0–67869–00 | SCREW, FLAT HEAD | 6 | 6 | | | | |

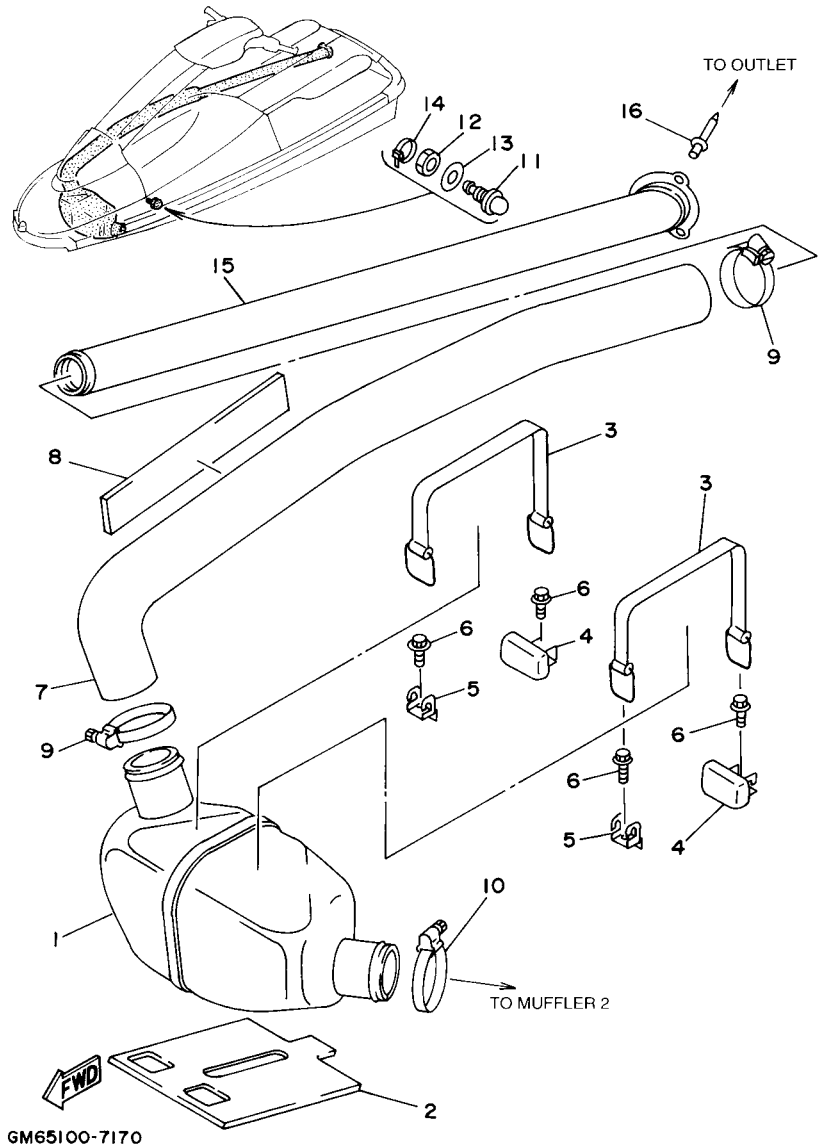


## FIG. 17 EXHAUST 2

| REF. NO. | PART NO. | DESCRIPTION | EUR | GENE | | | | REMARKS |
|---|---|---|---|---|---|---|---|---|
| 1 | F2F–67550–00 | WATER LOCK COMP. | 1 | 1 | | | | |
| 2 | GM6–6755J–00 | MAT,WATER LOCK | 1 | 1 | | | | |
| 3 | EU0–68218–04 | BAND, BATTERY | 2 | 2 | | | | |
| 4 | FX1–65760–00 | HOOK B ASSY | 2 | 2 | | | | |
| 5 | EW2–65772–00 | HOOK A | 2 | 2 | | | | |
| 6 | 90105–06900 | BOLT, FLANGE | 4 | 4 | | | | |
| 7 | GM6–67555–00 | HOSE | 1 | 1 | | | | |
| 8 | GM6–63844–00 | MAT | 1 | 1 | | | | |
| 9 | 90601–16875 | BAND, HOSE 68 | 2 | 2 | | | | |
| 10 | 90601–16875 | BAND, HOSE 68 | 1 | 1 | | | | |
| 11 | GH7–6753B–00 | PILOT,WATER | 1 | 1 | | | | |
| 12 | GP7–61652–00 | NUT | 1 | 1 | | | | |
| 13 | 92990–14200 | WASHER, PLAIN | 1 | 1 | | | | |
| 14 | 90465–11M10 | CLAMP | 1 | 1 | | | | |
| 15 | GM6–67565–00 | THRU-HULL,EXHAUST | 1 | 1 | | | | |
| 16 | 90267–48930 | RIVET, SEALD | 3 | 3 | | | | |

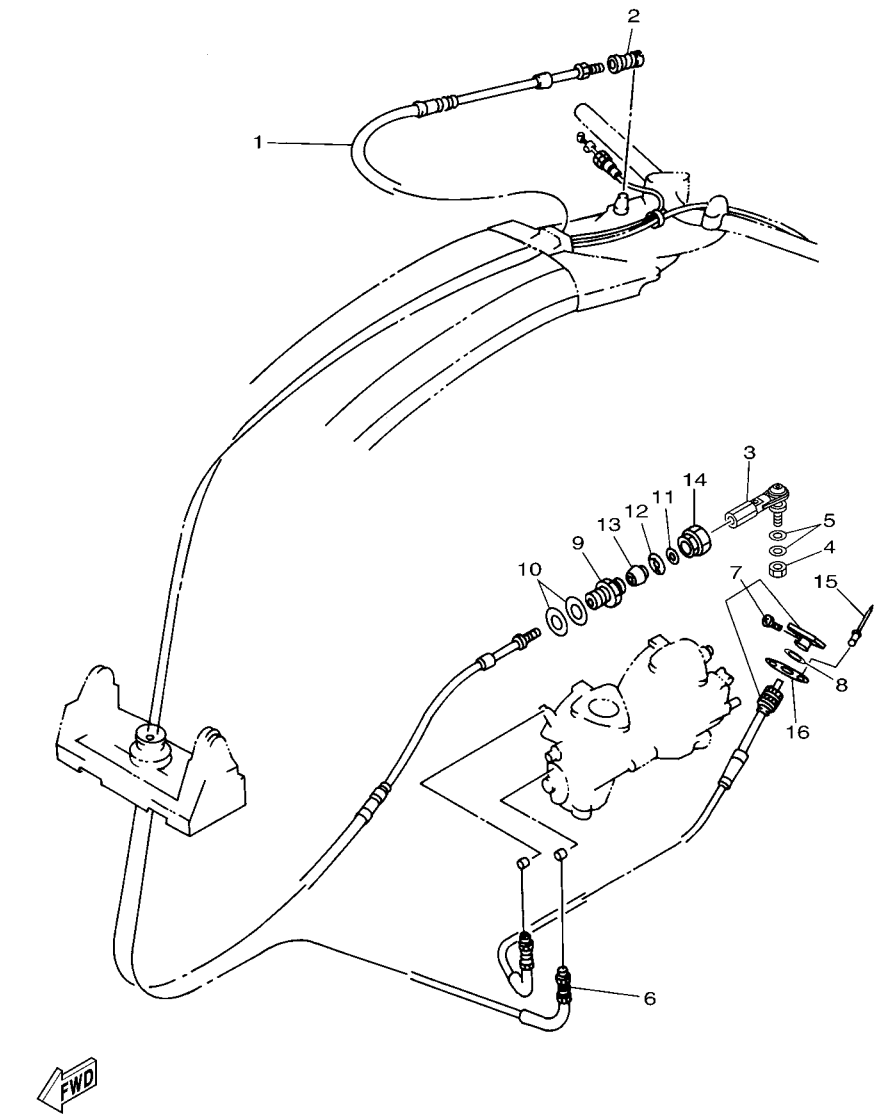


F2F1100-G190

## FIG. 18 CONTROL CABLE

| REF. NO. | PART NO. | DESCRIPTION | EUR | GENE | | | | REMARKS |
|---|---|---|---|---|---|---|---|---|
| 1 | F2F–61481–00 | CABLE, STEERING | 1 | 1 | | | | |
| 2 | EU0–61461–30 | SHAFT, JOINT BALL | 1 | 1 | | | | |
| 3 | F2F–61461–00 | STUD, JOINT BALL | 1 | 1 | | | | |
| 4 | 95380–06700 | NUT | 1 | 1 | | | | |
| 5 | 90201–06906 | WASHER, PLATE | 2 | 2 | | | | |
| 6 | GM6–67252–00 | CABLE, THROTTLE | 1 | 1 | | | | |
| 7 | GM6–67242–00 | CABLE, CHOKE | 1 | 1 | | | | |
| 8 | 90201–11008 | WASHER, PLATE | 1 | 1 | | | | |
| 9 | EU0–61436–00 | BODY,CABLE CONNECTOR | 1 | 1 | | | | |
| 10 | EU0–61438–00 | PACKING (C) | 2 | 2 | | | | |
| 11 | EU0–61446–00 | WASHER 30 | 1 | 1 | | | | |
| 12 | EU0–61486–00 | STOPPER | 1 | 1 | | | | |
| 13 | EU0–61435–00 | SEAL, PIPE 30 | 1 | 1 | | | | |
| 14 | EU0–62694–00 | CAP | 1 | 1 | | | | |
| 15 | 90267–40945 | RIVET, BLIND | 2 | 2 | | | | |
| 16 | 90209–12920 | WASHER | 1 | 1 | | | | |

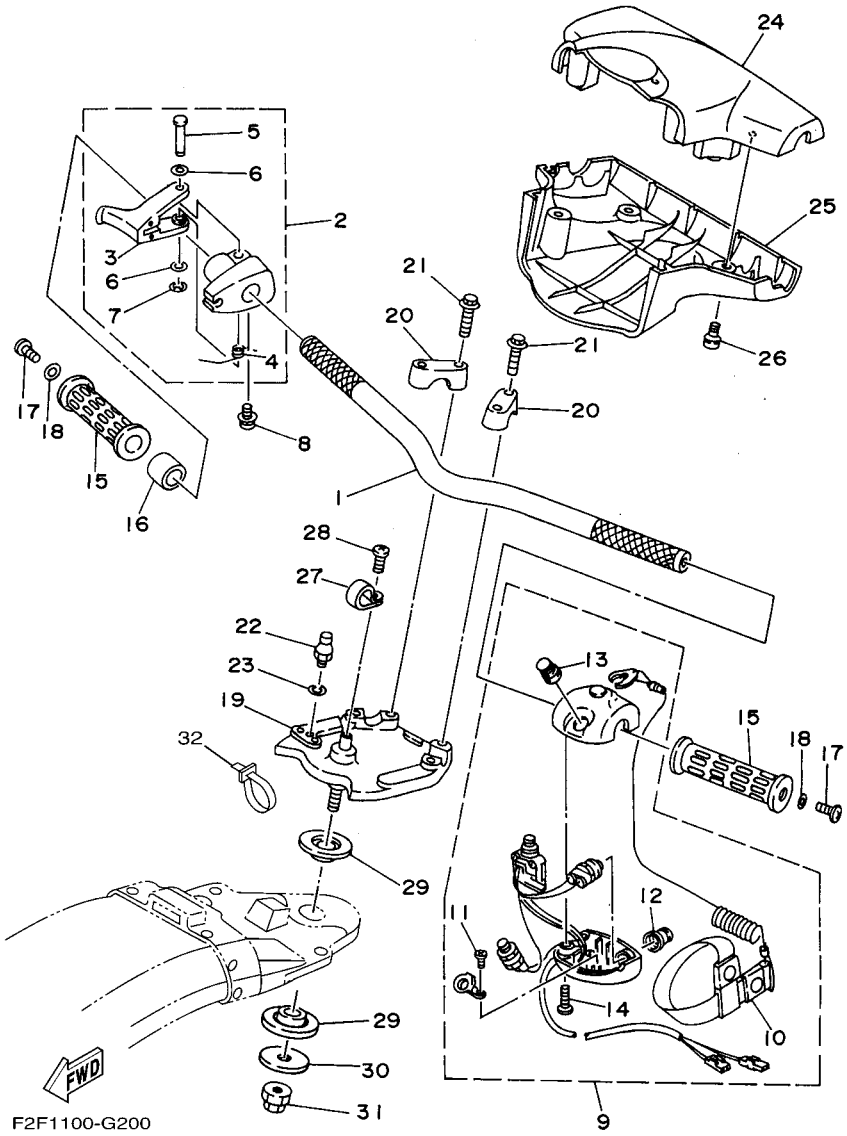


## FIG. 19 STEERING 1

| REF. NO. | PART NO. | DESCRIPTION | EUR | GENE | | | | REMARKS |
|---|---|---|---|---|---|---|---|---|
| 1 | F2F–61552–00 | HANDLE | 1 | 1 | | | | |
| 2 | EW2–67250–02 | THROTTLE LEVER ASSY | 1 | 1 | | | | |
| 3 | EW2–67255–00 | .LEVER, THROTTLE | 1 | 1 | | | | |
| 4 | EW2–67256–00 | .SPRING | 1 | 1 | | | | |
| 5 | EW2–67257–01 | .SHAFT | 1 | 1 | | | | |
| 6 | EW2–67258–01 | .WASHER | 2 | 2 | | | | |
| 7 | EW2–67259–01 | .E-RING | 1 | 1 | | | | |
| 8 | 90159–05900 | SCREW, WITH WASHER | 1 | 1 | | | | |
| 9 | EW2–68310–04 | SWITCH BOX ASSY | 1 | 1 | | | | |
| 10 | EW2–68348–00 | .LANYARD, STOP SWITCH | 1 | 1 | | | | |
| 11 | 97880–03008 | .SCREW, PAN HEAD | 2 | 2 | | | | |
| 12 | FK7–68312–02 | .STOP BUTTON COMP | 1 | 1 | | | | |
| 13 | FK7–68313–02 | .START BUTTON COMP. | 1 | 1 | | | | |
| 14 | 97880–05025 | .SCREW, PAN HEAD | 1 | 1 | | | | |
| 15 | EW2–61553–00 | GRIP, HANDLE 1 | 2 | 2 | | | | |
| 16 | 90560–22281 | SPACER | 1 | 1 | | | | |
| 17 | 90149–05959 | SCREW | 2 | 2 | | | | |
| 18 | 90201–05928 | WASHER, PLATE | 2 | 2 | | | | |
| 19 | F2F–61541–00 | COLUMN, STEERING | 1 | 1 | | | | |
| 20 | EU0–23814–01 | HOLDER, HANDLE LOWER | 2 | 2 | | | | |
| 21 | 90105–08902 | BOLT, FLANGE | 4 | 4 | | | | |
| 22 | EU0–61461–02 | STUD, JOINT BALL | 1 | 1 | | | | |
| 23 | 92990–06100 | WASHER, SPRING | 1 | 1 | | | | |
| 24 | FX1–6143D–20 | PAD, STEERING 1 | 1 | 1 | | | | YAMAHA BLACK |
| 25 | FX1–6143E–20 | PAD, STEERING 2 | 1 | 1 | | | | YAMAHA BLACK |
| 26 | 90149–05937 | SCREW | 4 | 4 | | | | |
| 27 | 90600–91728 | CLIP, NYLON 17 | 1 | 1 | | | | |

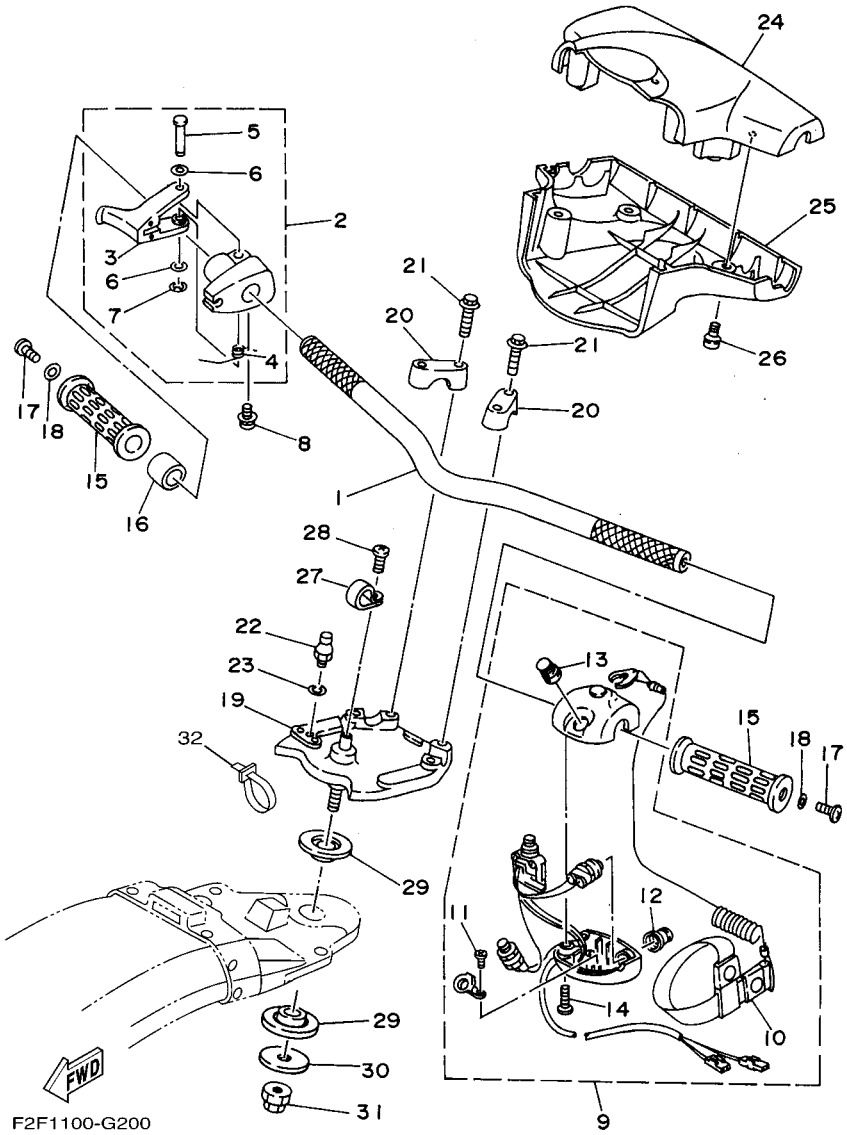


## FIG. 19 STEERING 1

| REF. NO. | PART NO. | DESCRIPTION | EUR | GENE | | | | REMARKS |
|---|---|---|---|---|---|---|---|---|
| 28 | 98980–04010 | SCREW, BIND | 1 | 1 | | | | |
| 29 | EW2–61417–00 | BEARING, COLUMN | 2 | 2 | | | | |
| 30 | EW2–61419–00 | WASHER, STEERING | 1 | 1 | | | | |
| 31 | 90179–12933 | NUT | 1 | 1 | | | | |
| 32 | 90465–13M11 | CLAMP | 1 | 1 | | | | |

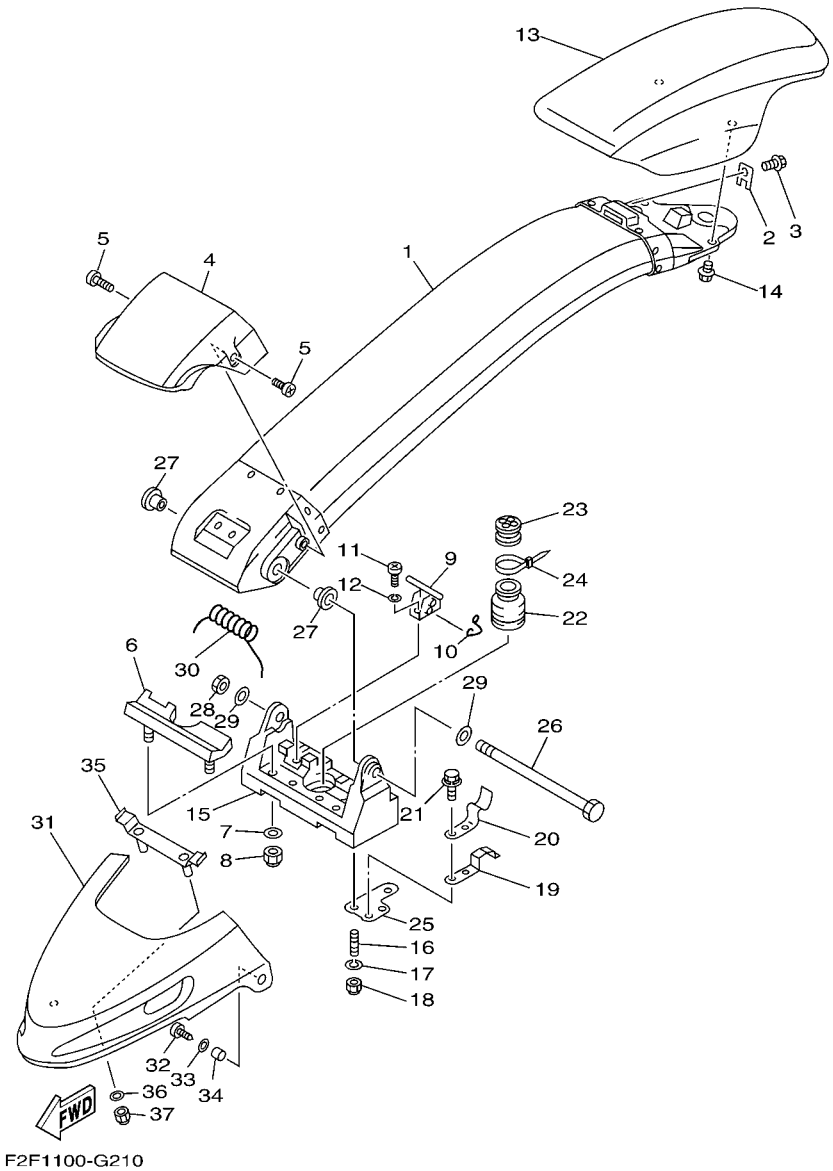


## FIG. 20 STEERING 2

| REF. NO. | PART NO. | DESCRIPTION | EUR | GENE | | | | REMARKS |
|---|---|---|---|---|---|---|---|---|
| 1 | F2F–6491A–09–P0 | STEERING POLE COMP. | 1 | 1 | | | | DVC2 |
| 2 | FX1–61468–00 | STOPPER, CABLE | 1 | 1 | | | | |
| 3 | 90119–06913 | BOLT, WITH WASHER | 1 | 1 | | | | |
| 4 | FX1–6492E–10 | COVER,POLE | 1 | 1 | | | | BLACK |
| 5 | 90149–06997 | SCREW | 2 | 2 | | | | |
| 6 | FX1–61337–00 | STOPPER, POLE | 1 | 1 | | | | |
| 7 | 92990–06200 | WASHER, PLAIN | 2 | 2 | | | | |
| 8 | 95720–06300 | NUT, SELF-LOCKING | 2 | 2 | | | | |
| 9 | FX1–61105–00 | STOPPER PIN ASSY | 1 | 1 | | | | |
| 10 | EW2–61395–30 | SPRING, TORSION | 1 | 1 | | | | |
| 11 | 97880–05012 | SCREW, PAN HEAD | 2 | 2 | | | | |
| 12 | 92990–05100 | WASHER, SPRING | 2 | 2 | | | | |
| 13 | GM6–6142A–30 | STEERING PAD COMP | 1 | 1 | | | | LNS6 |
| 14 | 90119–06908 | BOLT, WITH WASHER | 2 | 2 | | | | |
| 15 | FX1–6133C–13 | BRACKET,PIVOT | 1 | 1 | | | | |
| 16 | 95680–08630 | BOLT, STUD | 4 | 4 | | | | |
| 17 | 92990–08100 | WASHER, SPRING | 4 | 4 | | | | |
| 18 | 95720–08300 | NUT, SELF-LOCKING | 4 | 4 | | | | |
| 19 | GM6–6215G–00 | PLATE,GUIDE | 2 | 2 | | | | |
| 20 | GM6–65135–00 | STOPPER, HATCH 1 | 2 | 2 | | | | |
| 21 | 90119–06900 | BOLT, WITH WASHER | 4 | 4 | | | | |
| 22 | FX1–61338–00 | GROMMET | 1 | 1 | | | | |
| 23 | EW2–61465–00 | PACKING, CABLE | 1 | 1 | | | | |
| 24 | 90601–20006 | BAND | 1 | 1 | | | | |
| 25 | GM6–6133B–00 | PLATE, BRACKET | 2 | 2 | | | | |
| 26 | FX1–6134L–00 | SHAFT,PIVOT | 1 | 1 | | | | |
| 27 | EW2–61344–01 | BUSH | 2 | 2 | | | | |

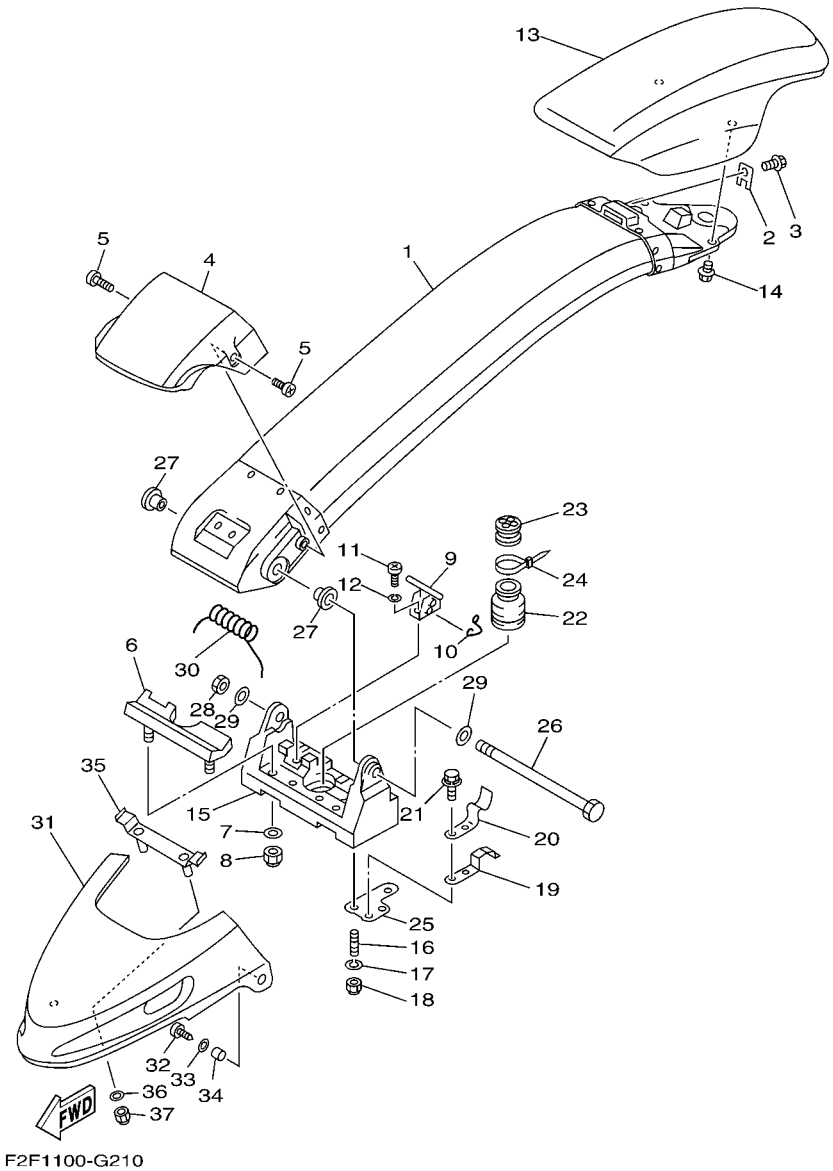


## FIG. 20 STEERING 2

| REF. NO. | PART NO. | DESCRIPTION | EUR | GENE | | | | REMARKS |
|---|---|---|---|---|---|---|---|---|
| 28 | 90170–14913 | NUT | 1 | 1 | | | | |
| 29 | 92990–14200 | WASHER, PLAIN | 2 | 2 | | | | |
| 30 | FX1–61391–00 | SPRING, PIVOT | 1 | 1 | | | | |
| 31 | GM6–6492J–20 | COVER,PIVOT 1 | 1 | 1 | | | | DPBSM |
| 32 | 97780–60520 | SCREW, TAPPING | 2 | 2 | | | | |
| 33 | 92990–06200 | WASHER, PLAIN | 2 | 2 | | | | |
| 34 | 90387–06916 | COLLAR | 2 | 2 | | | | |
| 35 | GM6–64949–00 | BRACKET | 1 | 1 | | | | |
| 36 | 92990–06200 | WASHER, PLAIN | 2 | 2 | | | | |
| 37 | 95720–06300 | NUT, SELF-LOCKING | 2 | 2 | | | | |

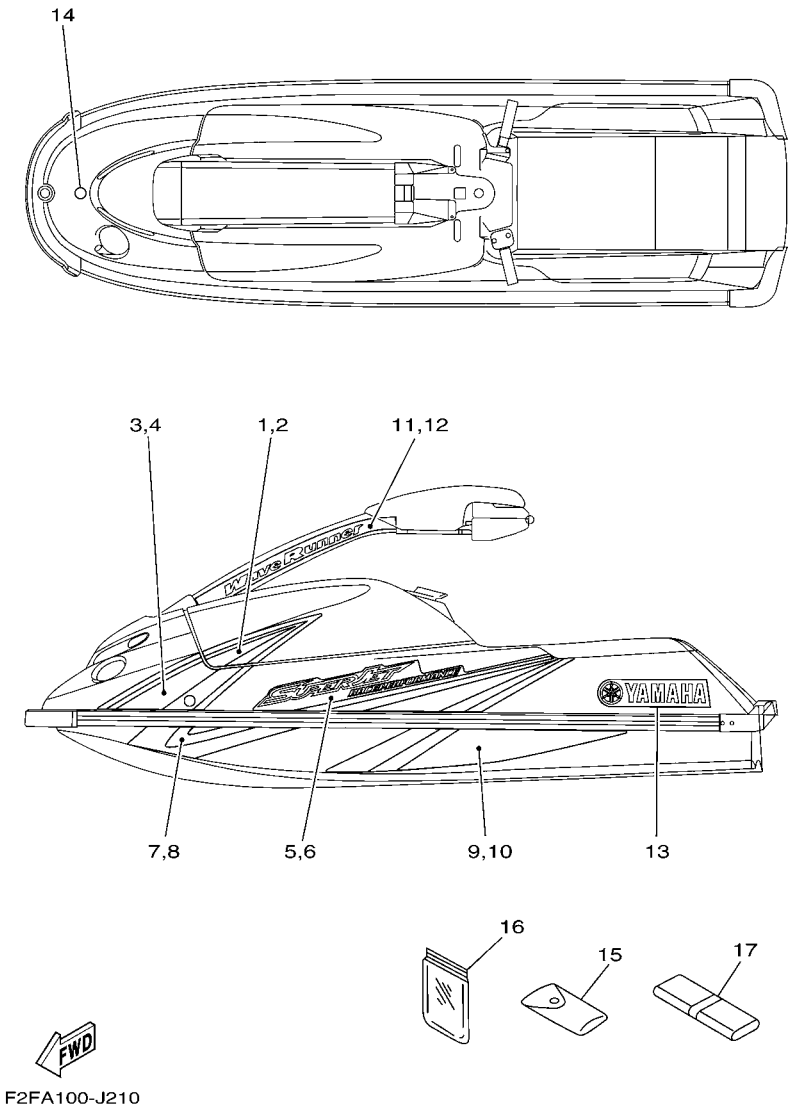


## FIG. 21 GRAPHICS

| REF. NO. | PART NO. | DESCRIPTION | EUR | GENE | | | | REMARKS |
|---|---|---|---|---|---|---|---|---|
| 1 | F2F–6417B–20 | GRAPHIC 1 (LH) | 1 | 1 | | | | |
| 2 | F2F–6417B–30 | GRAPHIC 1 (RH) | 1 | 1 | | | | |
| 3 | F2F–6417C–20 | GRAPHIC 2 (LH) | 1 | 1 | | | | |
| 4 | F2F–6417C–30 | GRAPHIC 2 (RH) | 1 | 1 | | | | |
| 5 | F2F–6417D–20 | GRAPHIC 3 (LH) | 1 | 1 | | | | |
| 6 | F2F–6417D–30 | GRAPHIC 3 (RH) | 1 | 1 | | | | |
| 7 | F2F–6417E–20 | GRAPHIC 4 (LH) | 1 | 1 | | | | |
| 8 | F2F–6417E–30 | GRAPHIC 4 (RH) | 1 | 1 | | | | |
| 9 | F2F–6417F–20 | GRAPHIC 5 (LH) | 1 | 1 | | | | |
| 10 | F2F–6417F–30 | GRAPHIC 5 (RH) | 1 | 1 | | | | |
| 11 | F2F–6417G–20 | GRAPHIC 6 (LH) | 1 | 1 | | | | |
| 12 | F2F–6417G–30 | GRAPHIC 6 (RH) | 1 | 1 | | | | |
| 13 | F2F–64114–00 | MARK, YAMAHA A | 2 | 2 | | | | |
| 14 | GM6–6411H–00 | EMBLEM, TUNING FORK | 1 | 1 | | | | |
| 15 | EU0–65986–00 | TOOL SET | 1 | 1 | | | | |
| 16 | EU0–65901–01 | TOOL BAG | 1 | 1 | | | | |
| 17 | GM6–65987–00 | BAG | 1 | 1 | | | | |

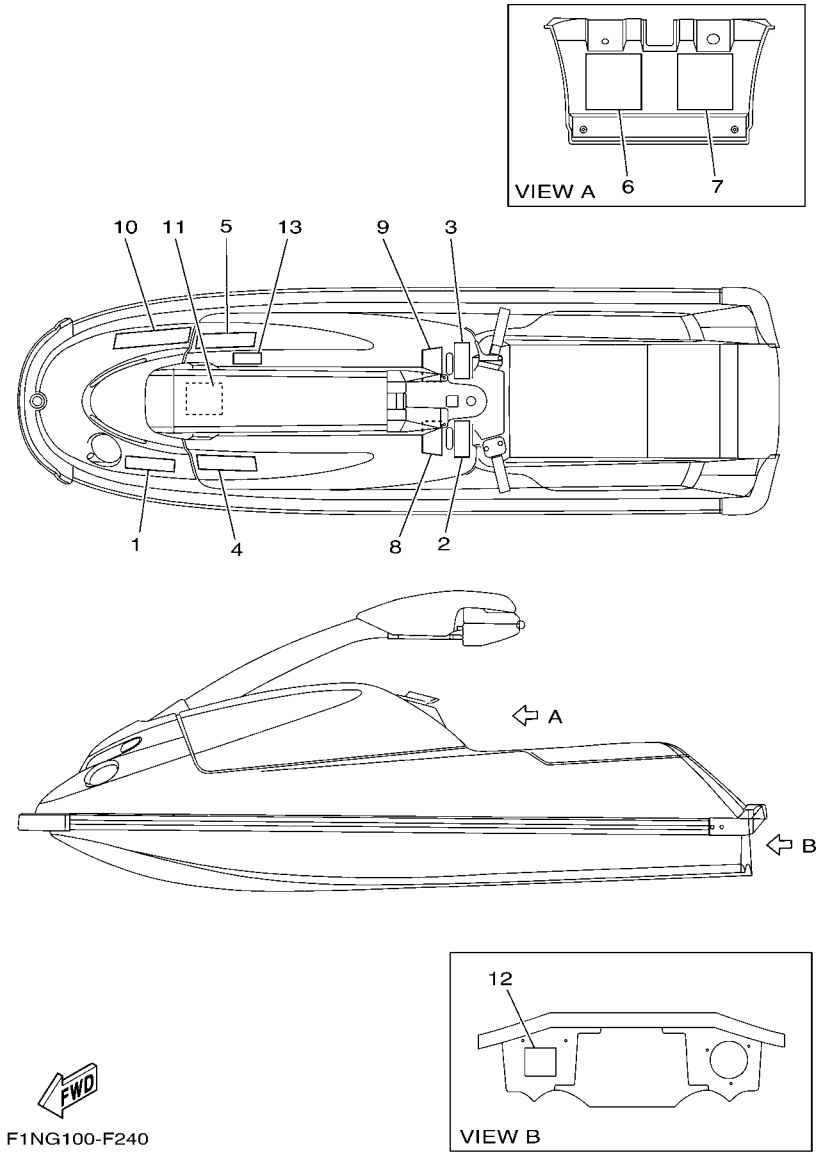


## FIG. 22 IMPORTANT LABELS

| REF. NO. | PART NO. | DESCRIPTION | EUR | GENE | | | | REMARKS |
|---|---|---|---|---|---|---|---|---|
| 1 | F1N–6415B–10 | LABEL, WARNING(FUEL) | 1 | 1 | | | | |
| 2 | GM6–641B1–21 | LABEL, WARNING UNIFORM 1 | 1 | 1 | | | | |
| 3 | GM6–641B1–10 | LABEL, WARNING UNIFORM 1 | 1 | 1 | | | | |
| 4 | GM6–641B1–41 | LABEL, WARNING UNIFORM 1 | 1 | 1 | | | | |
| 5 | GM6–641B1–50 | LABEL, WARNING UNIFORM 1 | 1 | 1 | | | | |
| 6 | GM6–641B2–00 | LABEL, WARNING UNIFORM 2 | 1 | 1 | | | | |
| 7 | GM6–641B2–10 | LABEL, WARNING UNIFORM 2 | 1 | 1 | | | | |
| 8 | GM6–641B2–40 | LABEL, WARNING UNIFORM 2 | 1 | 1 | | | | |
| 9 | GM6–641B2–50 | LABEL, WARNING UNIFORM 2 | 1 | 1 | | | | |
| 10 | GA7–6416H–20 | LABEL,WARNING(FRANCE) | 1 | | | | | FOR EUR |
| 11 | F1N–641DB–10 | LABEL, WARNING BATTERY | 1 | 1 | | | | |
| 12 | EU0–64188–00 | LABEL, RIGHTING | 1 | 1 | | | | |
| 13 | F1N–6413S–00 | LABEL, COMPETITION | 1 | | | | | FOR EUR |

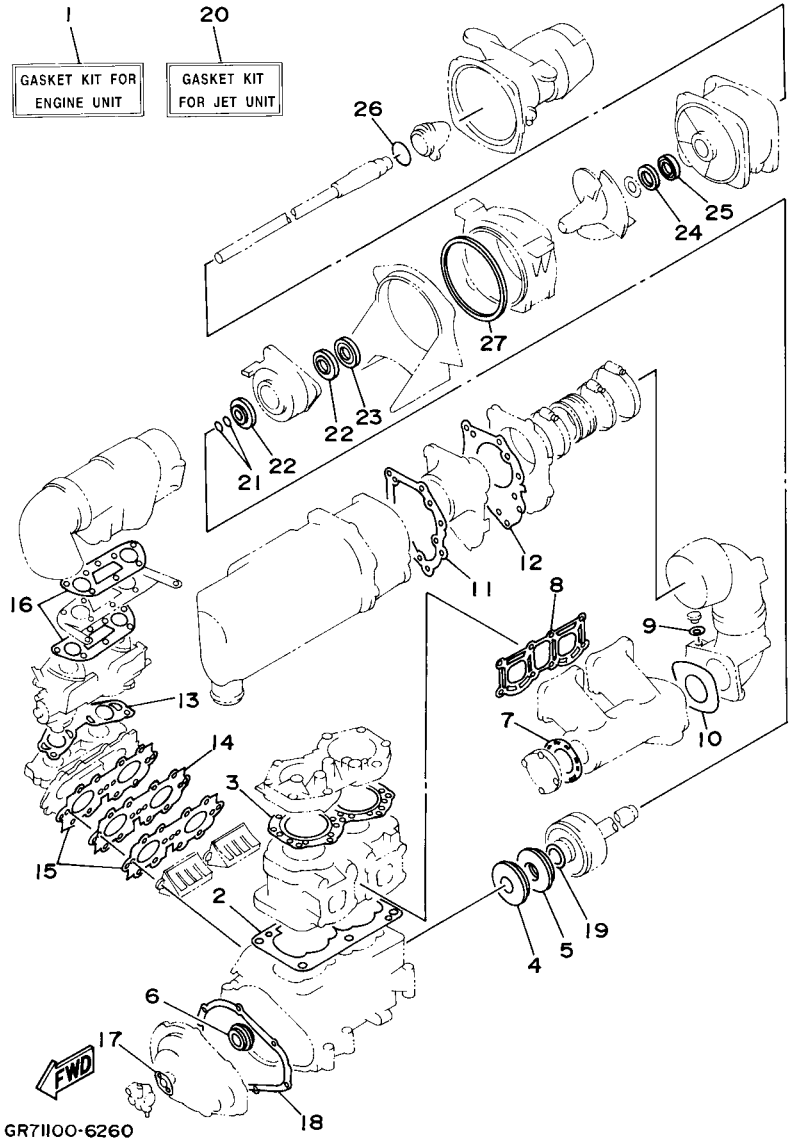


## FIG. 23 REPAIR KIT 1

| REF. NO. | PART NO. | DESCRIPTION | EUR | GENE | | | | REMARKS |
|---|---|---|---|---|---|---|---|---|
| 1 | 64U–W0001–00 | GASKET KIT FOR ENGINE UNIT | 1 | 1 | | | | |
| 2 | 6M6–11351–A2 | .GASKET, CYLINDER | 1 | 1 | | | | |
| 3 | 62T–11181–01 | .GASKET, CYLINDER HEAD 1 | 1 | 1 | | | | |
| 4 | 93102–36M33 | .OIL SEAL | 1 | 1 | | | | |
| 5 | 93101–36M46 | .OIL SEAL | 1 | 1 | | | | |
| 6 | 93103–32M01 | .OIL SEAL | 1 | 1 | | | | |
| 7 | 6M6–14739–A1 | .GASKET, MUFFLER DAMPER 1 | 1 | 1 | | | | |
| 8 | 61X–14613–A1 | .GASKET, EXHAUST PIPE | 1 | 1 | | | | |
| 9 | 90430–08020 | .GASKET | 1 | 1 | | | | |
| 10 | 6R7–14749–A1 | .GASKET, MUFFLER DAMPER 2 | 1 | 1 | | | | |
| 11 | 6R7–14755–A0 | .GASKET, SILENCER | 1 | 1 | | | | |
| 12 | 6R7–41114–A0 | .GASKET, EXHAUST OUTER COVER | 1 | 1 | | | | |
| 13 | 62T–13556–00 | .GASKET, MANIFOLD | 1 | 1 | | | | |
| 14 | 62T–13624–00 | .PLATE,REED VALVE | 1 | 1 | | | | |
| 15 | 62T–13566–00 | .GASKET | 2 | 2 | | | | |
| 16 | 62T–13674–00 | .GASKET, AIR COOLER COVER 1 | 2 | 2 | | | | |
| 17 | 6R8–13116–A0 | .GASKET, PUMP CASE | 1 | 1 | | | | |
| 18 | 6M6–81365–A0 | .GASKET, HOLE COVER | 1 | 1 | | | | |
| 19 | 62T–45127–00 | .SEAL | 1 | 1 | | | | |
| 20 | 61X–W0001–22 | GASKETKIT FOR JET UNIT | 1 | 1 | | | | |
| 21 | 93210–17MA4 | .O-RING | 2 | 2 | | | | |
| 22 | 93101–25M55 | .OIL SEAL | 2 | 2 | | | | |
| 23 | 93101–25M56 | .OIL SEAL | 1 | 1 | | | | |
| 24 | 93102–25M34 | .OIL SEAL | 1 | 1 | | | | |
| 25 | 93101–25M50 | .OIL SEAL | 1 | 1 | | | | |
| 26 | 93210–46M16 | .O-RING | 1 | 1 | | | | |
| 27 | 6R7–51117–01 | .PACKING | 1 | 1 | | | | |

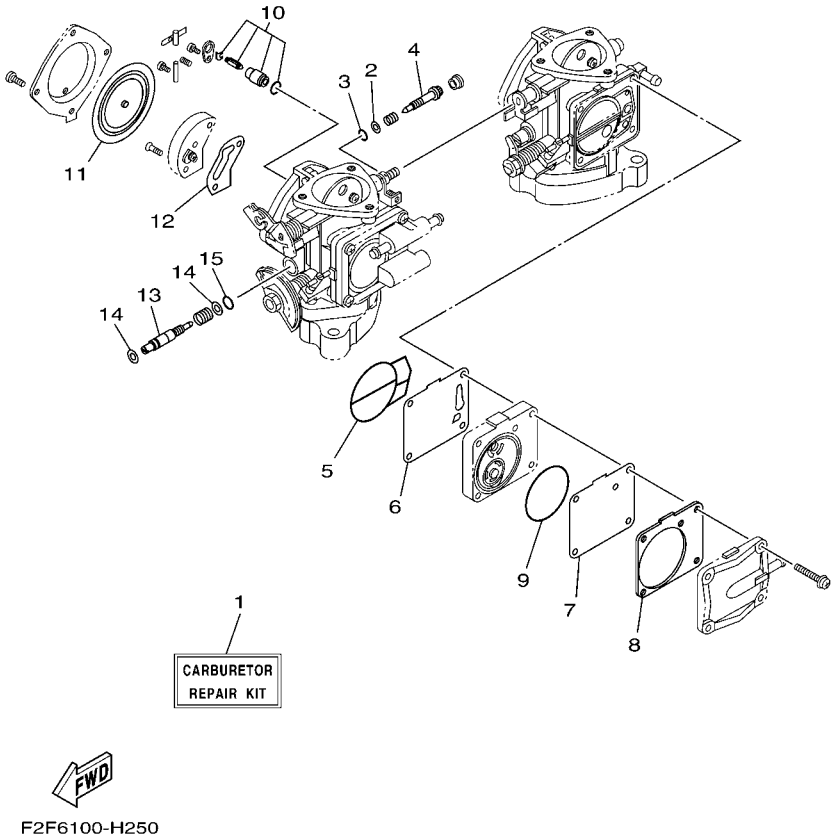


## FIG. 24 REPAIR KIT 2

| REF. NO. | PART NO. | DESCRIPTION | EUR | GENE | | | | REMARKS |
|---|---|---|---|---|---|---|---|---|
| 1 | 64U–W0093–03 | CARBURETOR REPAIR KIT | 1 | 1 | | | | |
| 2 | 812–14235–00 | .WASHER, NEEDLE | 4 | 4 | | | | |
| 3 | 812–14147–00 | .O-RING | 2 | 2 | | | | |
| 4 | 63M–14946–00 | .PLATE, NEEDLE FITTING | 2 | 2 | | | | |
| 5 | 6K8–14564–00 | .O-RING | 2 | 2 | | | | |
| 6 | 6K8–24411–20 | .DIAPHRAGM | 1 | 1 | | | | |
| 7 | 6K8–24421–10 | .VALVE, CHECK | 1 | 1 | | | | |
| 8 | 6K8–24431–20 | .GASKET, FUEL PUMP 1 | 1 | 1 | | | | |
| 9 | 6K8–14563–00 | .O-RING | 1 | 1 | | | | |
| 10 | 61X–14916–16 | .NEEDLE | 2 | 2 | | | | |
| 11 | 6R7–14541–00 | .DIAPHRAGM, PUMP | 2 | 2 | | | | |
| 12 | 6K8–14536–11 | .GASKET | 2 | 2 | | | | |
| 13 | 64U–14923–00 | .SCREW, PILOT | 2 | 2 | | | | |
| 14 | 822–14235–00 | .WASHER, NEEDLE | 4 | 4 | | | | |
| 15 | 583–14561–00 | .O-RING | 2 | 2 | | | | |

| PART NO. | REF. NO. |
|---|---|
| 64U–11111–00–8S | 1 – 8 |
| 62T–11181–01 | 1 – 11 |
| | 23 – 3 |
| 61X–11311–01–8S | 1 – 1 |
| 6E5–11325–00 | 1 – 2 |
| 6M6–11351–A2 | 1 – 5 |
| | 23 – 2 |
| 61X–11400–03 | 2 – 1 |
| 6M6–11412–00 | 2 – 2 |
| 6M6–11422–00 | 2 – 3 |
| 6M6–11431–10 | 2 – 4 |
| 6M6–11442–01 | 2 – 5 |
| 65U–11515–00 | 2 – 10 |
| 61X–11603–01 | 2 – 19 |
| 61X–11604–01 | 2 – 19 |
| 61X–11605–01 | 2 – 19 |
| 61X–11631–02–93 | 2 – 18 |
| 61X–11633–00 | 2 – 20 |
| 61X–11635–02 | 2 – 18 |
| 61X–11636–02 | 2 – 18 |
| 64X–11651–01 | 2 – 7 |
| 82M–11685–00 | 2 – 8 |
| 63M–12580–00 | 5 – 26 |
| 64X–12581–00 | 5 – 28 |
| 6R8–13116–A0 | 23 – 17 |
| 62T–13555–00–94 | 3 – 6 |
| 62T–13556–00 | 3 – 5 |
| | 23 – 13 |
| 62T–13566–00 | 3 – 8 |
| | 23 – 15 |
| 62T–13610–00 | 3 – 13 |
| 62T–13624–00 | 3 – 7 |
| | 23 – 14 |
| 62T–13674–00 | 3 – 28 |
| | 23 – 16 |
| 47X–14133–00 | 4 – 3 |
| 812–14147–00 | 4 – 6 |
| | 24 – 3 |
| 439–14186–00 | 4 – 28 |
| 830–14231–14 | 4 – 25 |
| 3G2–14231–26 | 4 – 11 |
| | 4 – 12 |
| 812–14235–00 | 4 – 4 |
| | 24 – 2 |
| 822–14235–00 | 4 – 41 |
| | 24 – 14 |
| 62T–14243–01 | 3 – 17 |
| 62T–14251–10 | 1 – 17 |

| PART NO. | REF. NO. |
|---|---|
| 6R7–14253–00 | 4 – 34 |
| 62T–14255–00 | 3 – 29 |
| 62T–14283–01 | 3 – 33 |
| 62T–14284–10–8S | 3 – 25 |
| 64U–14301–03 | 4 – 1 |
| 64U–14302–03 | 4 – 2 |
| 62T–14419–00 | 3 – 34 |
| 62T–14435–00 | 3 – 36 |
| 62T–14451–00 | 3 – 32 |
| 6K8–14471–10 | 4 – 8 |
| 6R7–14485–00 | 1 – 10 |
| | 5 – 32 |
| 6M6–14503–00 | 4 – 10 |
| 6K8–14503–02 | 4 – 23 |
| 6K8–14521–01 | 4 – 43 |
| 6M6–14521–01 | 4 – 5 |
| 6K8–14521–10 | 4 – 24 |
| 6K8–14523–11 | 4 – 30 |
| 62T–14527–02 | 3 – 20 |
| 6K8–14527–11 | 4 – 27 |
| 6K8–14536–11 | 4 – 37 |
| | 24 – 12 |
| 6R7–14541–00 | 4 – 35 |
| | 24 – 11 |
| 6R7–14542–00 | 4 – 36 |
| 6K8–14547–01 | 4 – 33 |
| 583–14561–00 | 4 – 42 |
| | 24 – 15 |
| 6K8–14563–00 | 4 – 22 |
| | 24 – 9 |
| 6K8–14564–00 | 4 – 13 |
| | 24 – 5 |
| 6R7–14569–00 | 4 – 31 |
| 6K8–14589–00 | 4 – 40 |
| 61X–14613–A1 | 5 – 7 |
| | 23 – 8 |
| 61L–14615–A0 | 5 – 44 |
| 61L–14625–A0 | 5 – 45 |
| 61X–14711–01–94 | 5 – 1 |
| 61L–14712–00–94 | 5 – 10 |
| 6M6–14718–01–8S | 5 – 3 |
| 6R7–14721–00–8S | 5 – 31 |
| 6M6–14739–A1 | 5 – 6 |
| | 23 – 7 |
| 6R7–14749–A1 | 5 – 18 |
| | 23 – 10 |
| 64V–14752–00 | 5 – 52 |
| 6R7–14753–00–8S | 5 – 33 |

| PART NO. | REF. NO. |
|---|---|
| 6R7–14755–A0 | 5 – 38 |
| | 23 – 11 |
| 6M6–14771–00–94 | 5 – 48 |
| 6R7–14785–00–8S | 5 – 37 |
| 61X–14916–16 | 4 – 32 |
| | 24 – 10 |
| 64U–14923–00 | 4 – 39 |
| | 24 – 13 |
| 3KW–14932–00 | 4 – 9 |
| 63M–14946–00 | 4 – 7 |
| | 24 – 4 |
| 62T–15100–00–8S | 1 – 16 |
| 6R7–15761–00 | 5 – 34 |
| 6R7–21415–01–94 | 1 – 23 |
| 6R7–21425–01–94 | 1 – 25 |
| EU0–23814–01 | 19 – 20 |
| 62T–24313–01 | 3 – 1 |
| 62T–24314–01 | 3 – 23 |
| 6E5–24378–00 | 5 – 20 |
| 6K8–24411–20 | 4 – 14 |
| | 24 – 6 |
| 6R7–24412–02 | 4 – 29 |
| 6M6–24413–01 | 4 – 15 |
| 65U–24421–00 | 4 – 16 |
| 6K8–24421–10 | 4 – 18 |
| | 24 – 7 |
| 6K8–24431–20 | 4 – 19 |
| | 24 – 8 |
| 6K8–24452–10 | 4 – 20 |
| 70R–24489–00 | 16 – 22 |
| 65U–24492–00 | 4 – 17 |
| 6K8–24500–02 | 6 – 9 |
| 6R7–24524–00 | 6 – 10 |
| 70R–24543–00 | 16 – 21 |
| 6K8–24560–10 | 6 – 8 |
| 6R7–41113–00–8S | 5 – 39 |
| 6R7–41114–A0 | 5 – 40 |
| | 23 – 12 |
| 6R7–44517–00–8S | 1 – 29 |
| 6BA–44532–00 | 1 – 20 |
| 663–45119–00 | 3 – 19 |
| 62T–45127–00 | 2 – 25 |
| | 23 – 19 |
| 61X–45332–03–94 | 8 – 5 |
| 61L–45378–00 | 8 – 6 |
| 6BA–45511–00 | 7 – 12 |
| 62T–45526–00 | 2 – 13 |
| 6M6–45813–22–8P | 2 – 29 |

| PART NO. | REF. NO. |
|---|---|
| 6M6–45813–32–8P | 2 – 24 |
| 61X–4581J–00 | 2 – 28 |
| 6R7–51117–01 | 7 – 28 |
| | 23 – 27 |
| 62T–51129–00 | 7 – 15 |
| 6K8–51129–00 | 1 – 9 |
| | 5 – 2 |
| | 5 – 11 |
| | 7 – 4 |
| | 7 – 14 |
| 6K8–51162–00 | 14 – 3 |
| 62T–51190–01–94 | 7 – 30 |
| 6R7–51311–00 | 7 – 27 |
| 6R7–51312–03–94 | 7 – 1 |
| 6BA–51313–00 | 7 – 20 |
| 62T–51315–01–94 | 7 – 3 |
| 64R–51318–01–94 | 7 – 13 |
| 6BA–51321–00 | 7 – 17 |
| 6R7–51323–02 | 8 – 3 |
| 62T–51326–00 | 7 – 8 |
| 6R7–51333–00 | 7 – 26 |
| 62T–51348–00 | 7 – 18 |
| 61X–51381–00 | 8 – 11 |
| 6BA–51387–00 | 7 – 34 |
| 6BA–51673–00 | 7 – 41 |
| 61L–5169A–00 | 3 – 18 |
| FX1–61105–00 | 20 – 9 |
| FX1–61337–00 | 20 – 6 |
| FX1–61338–00 | 20 – 22 |
| GM6–6133B–00 | 20 – 25 |
| FX1–6133C–13 | 20 – 15 |
| EW2–61344–01 | 20 – 27 |
| FX1–6134L–00 | 20 – 26 |
| FX1–61391–00 | 20 – 30 |
| EW2–61395–30 | 20 – 10 |
| EW2–61417–00 | 19 – 29 |
| EW2–61419–00 | 19 – 30 |
| GM6–6142A–30 | 20 – 13 |
| EU0–61435–00 | 18 – 13 |
| EU0–61436–00 | 18 – 9 |
| EU0–61438–00 | 18 – 10 |
| FX1–6143D–20 | 19 – 24 |
| FX1–6143E–20 | 19 – 25 |
| EU0–61446–00 | 18 – 11 |
| F2F–61461–00 | 18 – 3 |
| EU0–61461–02 | 19 – 22 |
| EU0–61461–30 | 18 – 2 |
| EW2–61465–00 | 20 – 23 |

| PART NO. | REF. NO. |
|---|---|
| FX1–61468–00 | 20 – 2 |
| F2F–61481–00 | 18 – 1 |
| EU0–61486–00 | 18 – 12 |
| F2F–61541–00 | 19 – 19 |
| F2F–61552–00 | 19 – 1 |
| EW2–61553–00 | 19 – 15 |
| FN8–61651–01 | 15 – 17 |
| EU0–61652–00 | 5 – 56 |
| | 14 – 7 |
| | 15 – 18 |
| GP7–61652–00 | 17 – 12 |
| EW2–62137–00 | 13 – 5 |
| GM6–6213F–00 | 13 – 4 |
| EW2–62142–00 | 16 – 20 |
| EW2–62149–00 | 12 – 8 |
| F2F–6214A–00 | 16 – 19 |
| EW2–62150–00 | 16 – 25 |
| GM6–6215G–00 | 20 – 19 |
| GM6–62501–10 | 15 – 1 |
| GM6–6251D–10 | 15 – 8 |
| GM6–6251E–10 | 15 – 9 |
| GM6–6252C–10 | 15 – 14 |
| GM6–6252D–10 | 15 – 15 |
| GM6–62552–10 | 15 – 5 |
| GM6–62553–10 | 15 – 6 |
| GM6–62664–01 | 13 – 27 |
| EU0–62694–00 | 18 – 14 |
| FN8–6269B–00 | 14 – 6 |
| EW2–62723–30 | 7 – 51 |
| F2F–6273B–00 | 7 – 52 |
| EW2–62840–10 | 13 – 28 |
| EW2–62843–00 | 13 – 31 |
| EW2–62845–10 | 13 – 29 |
| EW2–62846–00 | 13 – 30 |
| EW2–62847–00 | 13 – 32 |
| EW2–62848–00 | 13 – 33 |
| A00–62858–02 | 13 – 19 |
| F2F–6351B–00 | 15 – 19 |
| GM6–6351C–00 | 15 – 20 |
| GM6–6351D–00 | 15 – 21 |
| GM6–6351E–10 | 15 – 24 |
| GM6–63844–00 | 17 – 8 |
| F2F–64114–00 | 21 – 13 |
| GM6–6411H–00 | 21 – 14 |
| F1N–6413S–00 | 22 – 13 |
| F1N–6415B–10 | 22 – 1 |
| GA7–6416H–20 | 22 – 10 |
| F2F–6417B–20 | 21 – 1 |

| PART NO. | REF. NO. |
|---|---|
| F2F–6417B–30 | 21 – 2 |
| F2F–6417C–20 | 21 – 3 |
| F2F–6417C–30 | 21 – 4 |
| F2F–6417D–20 | 21 – 5 |
| F2F–6417D–30 | 21 – 6 |
| F2F–6417E–20 | 21 – 7 |
| F2F–6417E–30 | 21 – 8 |
| F2F–6417F–20 | 21 – 9 |
| F2F–6417F–30 | 21 – 10 |
| F2F–6417G–20 | 21 – 11 |
| F2F–6417G–30 | 21 – 12 |
| EU0–64188–00 | 22 – 12 |
| GM6–6418D–00 | 16 – 1 |
| GM6–641B1–10 | 22 – 3 |
| GM6–641B1–21 | 22 – 2 |
| GM6–641B1–41 | 22 – 4 |
| GM6–641B1–50 | 22 – 5 |
| GM6–641B2–00 | 22 – 6 |
| GM6–641B2–10 | 22 – 7 |
| GM6–641B2–40 | 22 – 8 |
| GM6–641B2–50 | 22 – 9 |
| F1N–641DB–10 | 22 – 11 |
| F2F–6491A–09–P0 | 20 – 1 |
| FX1–6492E–10 | 20 – 4 |
| GM6–6492J–20 | 20 – 31 |
| GM6–64949–00 | 20 – 35 |
| FX1–65116–10 | 13 – 2 |
| GM6–65135–00 | 20 – 20 |
| GM6–65136–00 | 13 – 21 |
| EW2–65137–00 | 13 – 22 |
| FX1–6514B–00 | 13 – 24 |
| FX1–6514F–00 | 13 – 16 |
| GM6–6516A–10–P1 | 13 – 1 |
| GM6–6516C–00 | 13 – 3 |
| FX1–6517D–00 | 13 – 10 |
| GM6–6521C–10 | 15 – 22 |
| GM6–6521D–10 | 15 – 23 |
| FX1–65760–00 | 16 – 30 |
| | 17 – 4 |
| EW2–65772–00 | 16 – 29 |
| | 17 – 5 |
| EU0–65901–01 | 21 – 16 |
| EW2–65912–00 | 13 – 8 |
| EW2–65913–00 | 13 – 9 |
| FX1–6591A–10 | 13 – 7 |
| FX1–6591K–00 | 13 – 13 |
| F1N–65938–00 | 6 – 25 |
| EU0–65986–00 | 21 – 15 |

| PART NO. | REF. NO. |
|---|---|
| GM6–65987–00 | 21 – 17 |
| GM6–67242–00 | 18 – 7 |
| GD0–67249–00–05 | 8 – 17 |
| GD0–67249–00–10 | 8 – 17 |
| EW2–67250–02 | 19 – 2 |
| GM6–67252–00 | 18 – 6 |
| EW2–67255–00 | 19 – 3 |
| EW2–67256–00 | 19 – 4 |
| EW2–67257–01 | 19 – 5 |
| EW2–67258–01 | 19 – 6 |
| EW2–67259–01 | 19 – 7 |
| EU0–67324–00 | 1 – 32 |
| EU0–67354–00–01 | 1 – 33 |
| EW2–67354–00–01 | 7 – 46 |
| EU0–67354–00–03 | 1 – 33 |
| EW2–67354–00–03 | 7 – 46 |
| EU0–67354–00–05 | 1 – 33 |
| EW2–67354–00–05 | 7 – 46 |
| EU0–67354–00–10 | 1 – 33 |
| EW2–67354–00–10 | 7 – 46 |
| EU0–67354–00–20 | 1 – 33 |
| GH7–6753B–00 | 17 – 11 |
| F2F–67550–00 | 17 – 1 |
| GM6–67555–00 | 17 – 7 |
| GM6–6755J–00 | 17 – 2 |
| GM6–67565–00 | 17 – 15 |
| GM6–67593–00 | 16 – 34 |
| F2F–6759B–00 | 16 – 35 |
| EU0–67613–00 | 14 – 9 |
| EW2–67618–00 | 14 – 10 |
| EW2–67711–01 | 16 – 2 |
| FJ0–67713–00 | 16 – 3 |
| EW2–67714–02 | 16 – 5 |
| EW2–67716–02 | 16 – 4 |
| GM6–6773E–00 | 6 – 18 |
| EU0–67767–31 | 16 – 16 |
| EU0–67816–30 | 6 – 24 |
| EU0–67817–00 | 6 – 27 |
| EW2–67821–00 | 16 – 27 |
| EW2–67821–30 | 16 – 28 |
| EW2–67822–01 | 16 – 36 |
| FN8–67831–01 | 16 – 38 |
| EU0–67832–00 | 16 – 39 |
| FN8–67833–00 | 16 – 40 |
| EU0–67834–00 | 16 – 43 |
| EU0–67835–00 | 16 – 41 |
| EU0–67839–00 | 16 – 42 |
| GM6–67844–11 | 16 – 32 |

| PART NO. | REF. NO. |
|---|---|
| EU0–67869–00 | 16 – 45 |
| EW2–68156–00 | 11 – 1 |
| EW2–68211–00 | 12 – 2 |
| EU0–68218–04 | 12 – 7 |
| | 17 – 3 |
| EU0–68221–00 | 12 – 3 |
| EW2–68221–00 | 12 – 5 |
| EU0–68221–30 | 12 – 4 |
| EW2–68310–04 | 19 – 9 |
| FK7–68312–02 | 19 – 12 |
| FK7–68313–02 | 19 – 13 |
| EW2–68348–00 | 19 – 10 |
| 6M6–8132W–00 | 11 – 11 |
| 6M6–81337–00–8S | 9 – 14 |
| 6M6–81365–A0 | 9 – 16 |
| | 23 – 18 |
| 6M6–81800–10 | 10 – 1 |
| 3AJ–81809–00 | 10 – 2 |
| 6M6–81820–00 | 10 – 7 |
| 6M6–81826–00 | 10 – 5 |
| 6M6–81830–00 | 10 – 8 |
| 6M6–8183E–01 | 10 – 15 |
| 6M6–81840–10 | 10 – 3 |
| 11H–81844–00 | 10 – 4 |
| 6M6–81844–00 | 11 – 10 |
| 26H–81847–00 | 10 – 9 |
| 6M6–81850–00 | 10 – 6 |
| 6M6–81865–00 | 10 – 17 |
| 6M6–81866–00 | 10 – 16 |
| 6M6–81921–00 | 11 – 9 |
| 68N–81940–00 | 11 – 18 |
| 6M6–81960–A0 | 11 – 22 |
| EU0–82110–09 | 12 – 1 |
| 64V–82117–00 | 12 – 12 |
| 6R7–82117–11 | 12 – 13 |
| 62E–82117–20 | 11 – 41 |
| 6K8–82150–01 | 11 – 13 |
| 6G1–82151–00 | 11 – 14 |
| 6K8–82159–00 | 11 – 15 |
| 62E–82351–01 | 11 – 26 |
| 62E–82352–01 | 11 – 28 |
| 6R7–82361–01 | 11 – 35 |
| 62E–82371–11 | 11 – 25 |
| | 11 – 27 |
| 6R7–82553–01 | 11 – 37 |
| 6R7–82560–11 | 11 – 38 |
| 6B6–83623–00 | 11 – 8 |
| 682–84385–01 | 5 – 29 |

| PART NO. | REF. NO. |
|---|---|
| 62T–85515–00 | 9 – 6 |
| 62T–85520–01 | 9 – 3 |
| 6M6–8552A–01–8P | 11 – 6 |
| 6M6–8552E–01 | 11 – 7 |
| 62T–85533–00 | 9 – 4 |
| 62T–85540–01 | 11 – 16 |
| 62T–85550–00 | 9 – 1 |
| 62T–85560–00 | 9 – 2 |
| 62E–85570–11 | 11 – 24 |
| 6M6–85580–00 | 9 – 5 |
| 67X–E2590–10 | 5 – 54 |
| 64U–W0001–00 | 23 – 1 |
| 61X–W0001–22 | 23 – 20 |
| 62T–W0004–00 | 3 – 14 |
| 64V–W0090–02–8S | 1 – 15 |
| 64U–W0093–03 | 24 – 1 |
| 90105–06900 | 16 – 31 |
| | 17 – 6 |
| 90105–08902 | 19 – 21 |
| 90105–10M49 | 5 – 49 |
| 90105–10M88 | 5 – 50 |
| 90109–08M56 | 1 – 21 |
| 90109–10M44 | 9 – 13 |
| 90116–08M60 | 3 – 3 |
| 90119–05923 | 13 – 35 |
| 90119–05M02 | 3 – 35 |
| 90119–06900 | 13 – 23 |
| | 20 – 21 |
| 90119–06908 | 7 – 44 |
| | 11 – 2 |
| | 20 – 14 |
| 90119–06913 | 20 – 3 |
| 90119–06915 | 7 – 43 |
| 90119–06920 | 12 – 6 |
| 90119–06M70 | 7 – 19 |
| 90119–06MA1 | 5 – 43 |
| 90119–08038 | 1 – 31 |
| 90119–08904 | 1 – 30 |
| 90119–08907 | 8 – 16 |
| 90119–08943 | 7 – 53 |
| 90119–08M55 | 1 – 19 |
| 90119–08M96 | 1 – 12 |
| 90119–10948 | 7 – 45 |
| 90119–10M00 | 1 – 27 |
| 90119–10M01 | 1 – 26 |
| 90119–10M02 | 1 – 24 |
| 90119–10M03 | 1 – 28 |
| 90119–10M07 | 1 – 7 |

| PART NO. | REF. NO. |
|---|---|
| 90119–10M17 | 5 – 51 |
| 90119–10M56 | 1 – 6 |
| 90149–05937 | 19 – 26 |
| 90149–05959 | 19 – 17 |
| 90149–05960 | 15 – 10 |
| 90149–05962 | 15 – 7 |
| 90149–06997 | 20 – 5 |
| 90159–05900 | 19 – 8 |
| 90170–14913 | 20 – 28 |
| 90170–22187 | 6 – 29 |
| 90179–05964 | 15 – 13 |
| 90179–06947 | 7 – 47 |
| 90179–08962 | 7 – 48 |
| 90179–08M15 | 3 – 4 |
| 90179–10925 | 7 – 50 |
| 90179–12933 | 19 – 31 |
| 90201–05928 | 19 – 18 |
| 90201–06906 | 18 – 5 |
| 90201–06M31 | 7 – 39 |
| 90201–11008 | 18 – 8 |
| 90201–20M04 | 2 – 21 |
| 90201–24M02 | 2 – 30 |
| 90209–12920 | 18 – 16 |
| 90267–40935 | 16 – 44 |
| 90267–40945 | 18 – 15 |
| 90267–48925 | 6 – 21 |
| | 16 – 23 |
| 90267–48930 | 17 – 16 |
| 90267–48932 | 15 – 16 |
| 90267–48938 | 13 – 25 |
| 90267–48940 | 6 – 26 |
| 90267–48963 | 15 – 25 |
| 90280–05013 | 9 – 12 |
| 90340–08M04 | 5 – 12 |
| 90380–12M29 | 1 – 18 |
| | 9 – 15 |
| 90387–06916 | 20 – 34 |
| 90387–06M05 | 9 – 22 |
| | 9 – 26 |
| 90387–06M60 | 8 – 12 |
| 90387–08M06 | 7 – 23 |
| 90387–08M08 | 7 – 33 |
| 90430–08020 | 5 – 13 |
| | 23 – 9 |
| 90445–07M19 | 1 – 13 |
| 90445–09M17 | 8 – 1 |
| 90445–10M98 | 6 – 13 |
| 90445–10ME3 | 6 – 11 |

| PART NO. | REF. NO. |
|---|---|
| 90445–10ME4 | 6 – 15 |
| 90445–10ME8 | 6 – 1 |
| 90445–10MF1 | 6 – 5 |
| 90445–11055 | 16 – 6 |
| 90445–14M04 | 14 – 5 |
| 90445–14M05 | 5 – 27 |
| 90445–14M12 | 7 – 24 |
| 90445–14M14 | 5 – 24 |
| 90445–14M24 | 14 – 1 |
| 90445–14M29 | 5 – 19 |
| | 5 – 21 |
| 90445–14M33 | 5 – 22 |
| 90446–14M23 | 6 – 2 |
| 90446–14M30 | 16 – 14 |
| 90446–14M64 | 6 – 6 |
| 90450–14M05 | 5 – 25 |
| | 5 – 55 |
| | 7 – 25 |
| 90450–18M09 | 5 – 30 |
| 90460–64M15 | 5 – 53 |
| 90460–70M16 | 5 – 47 |
| 90460–90M11 | 5 – 46 |
| 90464–06M29 | 11 – 17 |
| 90464–08M07 | 6 – 3 |
| 90464–20258 | 13 – 26 |
| 90465–06M86 | 11 – 23 |
| 90465–11M10 | 3 – 2 |
| | 3 – 24 |
| | 5 – 23 |
| | 6 – 7 |
| | 6 – 12 |
| | 6 – 14 |
| | 6 – 16 |
| | 6 – 17 |
| | 7 – 42 |
| | 8 – 2 |
| | 11 – 30 |
| | 12 – 11 |
| | 14 – 2 |
| | 16 – 17 |
| | 16 – 26 |
| | 17 – 14 |
| 90465–12M53 | 9 – 21 |
| | 9 – 25 |
| 90465–12M56 | 6 – 4 |
| 90465–13M11 | 11 – 42 |
| | 14 – 4 |
| | 14 – 12 |

| PART NO. | REF. NO. |
|---|---|
| 90465–13M11 | 16 – 15 |
| | 19 – 32 |
| 90467–06016 | 1 – 14 |
| 90467–08M10 | 12 – 10 |
| 90467–11032 | 16 – 8 |
| 90480–06M43 | 11 – 29 |
| 90480–06M69 | 8 – 14 |
| 90501–14M73 | 10 – 21 |
| 90560–22281 | 19 – 16 |
| 90600–91728 | 19 – 27 |
| 90600–91736 | 6 – 20 |
| 90600–91755 | 14 – 8 |
| 90601–11062 | 16 – 7 |
| 90601–15573 | 16 – 33 |
| 90601–16274 | 16 – 12 |
| 90601–16875 | 13 – 6 |
| | 17 – 9 |
| | 17 – 10 |
| 90601–20006 | 6 – 19 |
| | 6 – 22 |
| | 20 – 24 |
| 90601–20016 | 6 – 23 |
| 90601–20024 | 5 – 57 |
| 90699–50003 | 16 – 13 |
| 90699–50045 | 16 – 24 |
| 90699–50085 | 12 – 9 |
| 90699–50120 | 16 – 18 |
| 91490–16010 | 16 – 11 |
| 91790–05040 | 16 – 9 |
| 92580–06016 | 13 – 14 |
| 92903–06600 | 3 – 10 |
| | 3 – 12 |
| | 3 – 22 |
| | 3 – 27 |
| | 3 – 31 |
| | 5 – 5 |
| | 5 – 36 |
| | 10 – 20 |
| 92903–08600 | 5 – 9 |
| | 5 – 15 |
| | 5 – 17 |
| | 10 – 12 |
| 92990–05100 | 15 – 12 |
| | 20 – 12 |
| 92990–05200 | 15 – 11 |
| 92990–05600 | 3 – 16 |
| | 16 – 10 |
| 92990–06100 | 10 – 13 |

| PART NO. | REF. NO. |
|---|---|
| 92990–06100 | 13 – 12 |
| | 13 – 15 |
| | 15 – 3 |
| | 19 – 23 |
| 92990–06200 | 13 – 17 |
| | 15 – 2 |
| | 20 – 7 |
| | 20 – 33 |
| | 20 – 36 |
| 92990–06600 | 9 – 11 |
| | 11 – 32 |
| | 11 – 34 |
| 92990–08100 | 11 – 5 |
| | 20 – 17 |
| 92990–08200 | 11 – 4 |
| 92990–14200 | 17 – 13 |
| | 20 – 29 |
| 92995–06100 | 11 – 20 |
| | 11 – 40 |
| 92995–06600 | 5 – 42 |
| | 7 – 11 |
| | 7 – 36 |
| | 7 – 38 |
| | 9 – 18 |
| | 9 – 20 |
| | 9 – 24 |
| | 11 – 21 |
| 92995–08600 | 7 – 22 |
| | 7 – 32 |
| 93101–25M50 | 7 – 7 |
| | 23 – 25 |
| 93101–25M55 | 8 – 7 |
| | 23 – 22 |
| 93101–25M56 | 8 – 8 |
| | 23 – 23 |
| 93101–36M46 | 2 – 16 |
| | 23 – 5 |
| 93102–25M34 | 7 – 6 |
| | 23 – 24 |
| 93102–36M33 | 2 – 15 |
| | 23 – 4 |
| 93103–32M01 | 2 – 17 |
| | 23 – 6 |
| 93210–13M63 | 3 – 37 |
| 93210–17MA4 | 8 – 4 |
| | 23 – 21 |
| 93210–46M16 | 7 – 9 |
| | 23 – 26 |

| PART NO. | REF. NO. |
|---|---|
| 93305–30601 | 2 – 6 |
| 93306–205U0 | 7 – 5 |
| 93306–205U6 | 8 – 10 |
| 93306–207U2 | 2 – 9 |
| 93306–307U3 | 2 – 12 |
| 93310–320U2 | 2 – 22 |
| 93310–525U0 | 2 – 11 |
| 93430–47M04 | 8 – 9 |
| 93440–25M08 | 10 – 18 |
| 93440–80023 | 2 – 14 |
| 93450–18M06 | 10 – 19 |
| 93450–21053 | 2 – 23 |
| 93603–10049 | 2 – 26 |
| 93604–07141 | 2 – 27 |
| 93606–07M17 | 7 – 29 |
| 93606–12019 | 1 – 4 |
| | 1 – 22 |
| | 7 – 2 |
| | 7 – 16 |
| | 8 – 15 |
| | 9 – 27 |
| 94702–00272 | 11 – 36 |
| 95380–06700 | 7 – 40 |
| | 10 – 14 |
| | 18 – 4 |
| 95380–06800 | 15 – 4 |
| 95380–08600 | 11 – 3 |
| 95680–08630 | 20 – 16 |
| 95720–05300 | 13 – 34 |
| 95720–06300 | 13 – 18 |
| | 20 – 8 |
| | 20 – 37 |
| 95720–08300 | 20 – 18 |
| 97013–06012 | 3 – 30 |
| 97013–06016 | 3 – 21 |
| 97013–06020 | 3 – 26 |
| | 5 – 35 |
| 97013–06025 | 3 – 11 |
| | 5 – 4 |
| 97013–06035 | 3 – 9 |
| 97013–08025 | 5 – 16 |
| 97013–08035 | 5 – 8 |
| | 10 – 11 |
| 97013–08090 | 5 – 14 |
| 97090–06014 | 13 – 11 |
| 97095–06010 | 11 – 19 |
| 97095–06014 | 7 – 35 |
| 97095–06016 | 5 – 41 |

| PART NO. | REF. NO. |
|---|---|
| 97095–06016 | 11 – 39 |
| 97095–06020 | 7 – 10 |
| | 7 – 37 |
| 97095–06025 | 9 – 17 |
| 97095–06035 | 9 – 19 |
| | 9 – 23 |
| 97095–08018 | 7 – 31 |
| 97095–08020 | 7 – 21 |
| 97513–08540 | 10 – 10 |
| 97595–06525 | 8 – 13 |
| 97780–50114 | 14 – 11 |
| | 16 – 37 |
| 97780–50316 | 13 – 20 |
| 97780–60120 | 7 – 49 |
| 97780–60520 | 20 – 32 |
| 97780–60525 | 11 – 12 |
| 97802–04008 | 9 – 9 |
| 97880–03008 | 19 – 11 |
| 97880–05012 | 4 – 38 |
| | 20 – 11 |
| 97880–05016 | 3 – 15 |
| 97880–05025 | 19 – 14 |
| 97880–06016 | 9 – 10 |
| | 11 – 33 |
| 97880–06030 | 11 – 31 |
| 97902–04122 | 9 – 8 |
| 97902–05125 | 9 – 7 |
| 97980–05330 | 4 – 21 |
| 98580–05018 | 4 – 26 |
| 98780–04015 | 1 – 3 |
| 98980–04008 | 6 – 28 |
| 98980–04010 | 19 – 28 |

| PART NO. | REF. NO. |
|---|---|

| PART NO. | REF. NO. |
|---|---|

| PART NO. | REF. NO. |
|---|---|