YAMAHA

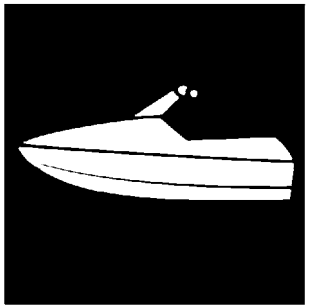

PARTS CATALOGUE

Wave Runner FX Cruiser SHO

FX1800A-J (F1WD/6S5G/6S51)
FX1800A-J (F1WE/6S5H/6S51)
FX1800A-J (F1WF/6S5J/6S51)

1JF1W-100E1

( )

YAMAHA GENUINE Parts & Accessories

2013/9/18

NEWS NO.	DATE	COMMENT
PE0-WV-090014	Sep,29,2009	MOD:FX1800 FIG.31 FUEL TANK LIST/ILLUST. REVISION
PE0-WV-100002	Feb.,4,2010	COR:FIG.35 STEERING 1 ILLUST. CORRECTION
PE0-WV-100007	Mar.,30,2010	MOD:FIG.6 INTAKE 1 LIST REVISION
PE0-WV-100008	May,12,2010	MOD:FIG.3,12,13,14,21 LIST/ILLUST. REVISION
PE0-WV-120001	Jan.,27,2012	COR:OIL PUMP & OIL COOLER LIST CORRECTION

2013/9/18

NEWS NO.	DATE	COMMENT
PE0-WV-120011	Aug.,10,2012	COR:HULL & DECK, STEERING 1 LIST/ILLUST. CORRECTION
PE0-WV-130002	Sep.,4,2013	COR:FIG.7 INTAKE ILLUST. CORRECTION

FX1800A-J
PARTS CATALOGUE
©2009 by Yamaha Motor Co., Ltd.
1st edition, July 2009
All rights reserved.
Any reprinting or unauthorized use
without the written permission of
Yamaha Motor Co., Ltd.
is expressly prohibited.
Printed in Japan.

FOREWORD

This Parts Catalogue is related to the parts for the model(s) on the cover page. When you are ordering replacement parts, please refer to this Parts Catalogue and quote both part numbers and part names correctly.

1. Modifications or additions which have been made after the issue of the Parts Catalogue will be announced in the Parts News.
   It is advisable that you make the necessary corrections to the Parts Catalogue according to the Parts News.

2. Abbreviations
   The following abbreviations are used in this Parts Catalogue.

   “UR” Use specified parts number.
   “UN” Use as many as needed.
   “AP” Alternate Parts
   “LM” Locally Made (Parts need to be ordered locally)
   “F#” Frame No. (Applicable machine No.)
   “O/S” Over Size

3. The number of components for assembly
   - Parts, which are to be supplied in an assembly, are listed with a dot (.) in front of the part name as shown below.
   - The numeral appearing to the right of each component part indicates the quantity of parts for each assembly unit.

PART NO.	DESCRIPTION	Q’TY	REMARKS
2F5–83310–60	FRONT FLASHER LIGHT ASSY	2	
115–83311–60	.BULB (6V–18W)	1	

4. Applicable colours of graphics are represented in the “REMARKS” as shown below.

PART NO.	DESCRIPTION	Q’TY	REMARKS
2N4–24110–00–X5	FUEL TANK COMP.	2	MXR
3J1–24240–10	.GRAPHIC, FUEL TANK	1	FOR MXR

5. Note that the illustrations for reference in finding parts numbers are not to be used for assembling. When assembling, please use the applicable service manual.

6. The asterisk (*) before a reference number indicates modified items after the first edition.

7. Applicable Serial No.

Engine Serial No.

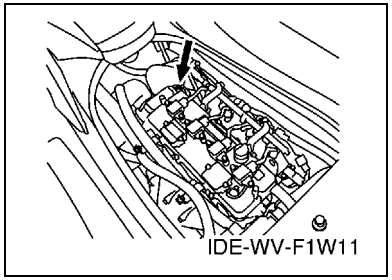

Hull Serial No.

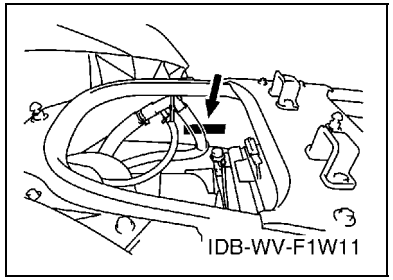

8. Applicable Colour Code (The (*) mark shows Model colour.)

Abbreviation	Colour Name	Colour Code
LGM3(*)	LIGHT GRAY METALLIC 3	0137
DPBM11(*)	DARK PURPLISH BLUE METALLIC 11	1187
SSA(*)	BLACK SOLID A	1000
NME	GRAY METALLIC E	1049
LNMP	LIGHT GRAY METALLIC P	0925

9. Quantity Column Information

Column No.	Name Of Q'ty Column	Destination
1	CAN	CANADA
2	EUR	EUROPE
3	GENE	EXCEPT USA, CAN, EUR

10. Applicable Starting Serial No.

Engine Serial No.

Serial No.	Name Of Q'ty Column	Model Code
6S5-1022561	CAN	6S5G
6S5-1022561	EUR	6S5J
6S5-1022561	GENE	6S5H

Hull Serial No.

Serial No.	Name Of Q'ty Column	Model Code
F1W-819201	CAN	F1WD
F1W-818801	EUR	F1WF
F1W-819001	GENE	F1WE

CONTENTS

CYLINDER 1 1
CYLINDER 2 2
CRANKCASE 3
CRANKSHAFT & PISTON 5
VALVE 7
INTAKE 1 9
INTAKE 2 11
INTAKE 3 13
OIL PUMP 14
OIL PAN 15
OIL COOLER 16
BREATHER OIL 17
EXHAUST 1 18
EXHAUST 2 19
JET UNIT 1 22
JET UNIT 2 24
JET UNIT 3 25
JET UNIT 4 26
GENERATOR 28
STARTING MOTOR 29
ELECTRICAL 1 30
ELECTRICAL 2 32
ELECTRICAL 3 34
ENGINE MOUNT 36
ENGINE HATCH 1 37
ENGINE HATCH 2 39
HULL & DECK 41
GUNWALE & MAT 44
VENTILATION 46
SEAT & UNDER LOCKER 47
FUEL TANK 49
BILGE PUMP 51
EXHAUST 3 53
CONTROL CABLE 54
STEERING 1 57
STEERING 2 59
GRAPHICS 60
IMPORTANT LABELS 61
REPAIR KIT 1 62

INDEX

NUMERICAL INDEX 64

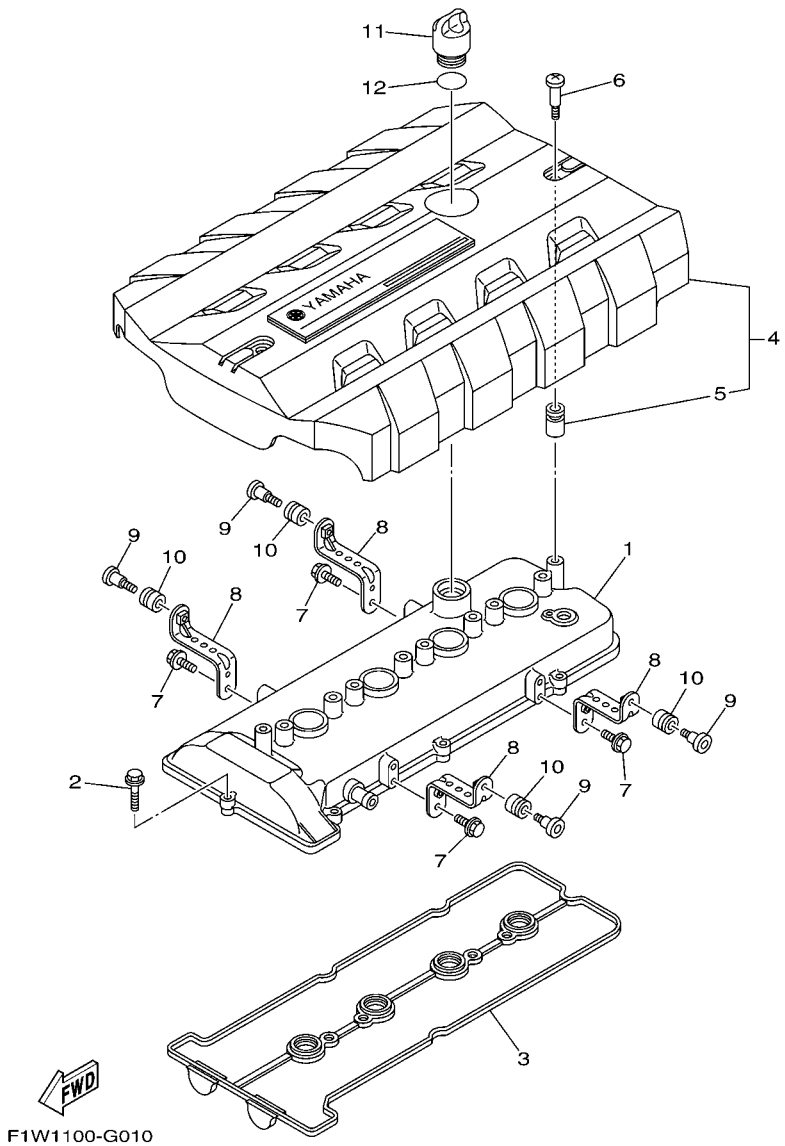

FIG. 1 CYLINDER 1

REF. NO.	PART NO.	DESCRIPTION	CAN	EUR	GENE			REMARKS
1	6S5–11191–00–94	COVER, CYLINDER HEAD 1	1	1	1			
2	90105–06028	BOLT, FLANGE	8	8	8			
3	6S5–11193–00	GASKET, HEAD COVER 1	1	1	1			
4	6S5–E110M–00	COVER ASSY 1	1	1	1			
5	6S5–E1328–00	.GROMMET, ANODE	2	2	2			
6	6S5–E118E–00	BOLT, COVER MOUNTING	2	2	2			
7	95814–06012	BOLT, FLANGE	4	4	4			
8	6S5–11941–00	STAY	4	4	4			
9	6S5–11026–00	BOLT, MOUNT	4	4	4			
10	6S5–1111G–00	RUBBER, MOUNT 1	4	4	4			
11	6S5–15363–00	PLUG, OIL	1	1	1			
12	93210–24M79	O-RING	1	1	1			

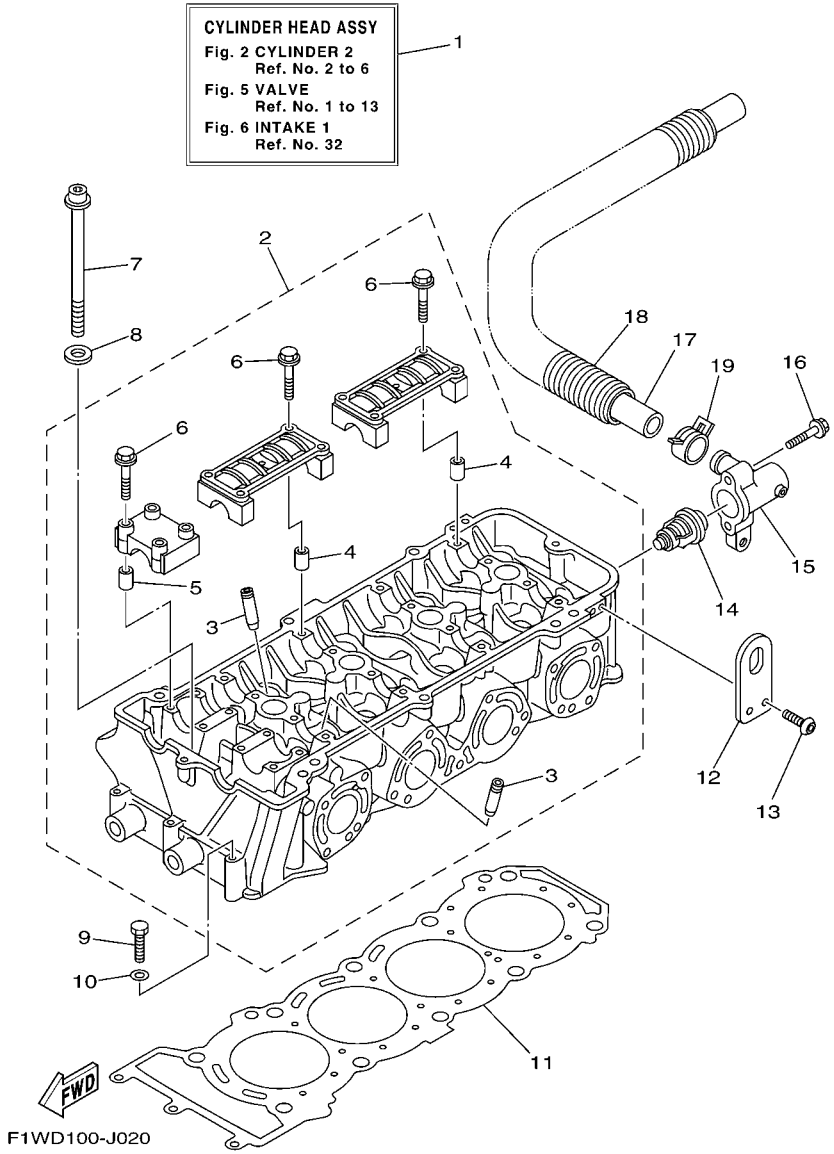

FIG. 2 CYLINDER 2

REF. NO.	PART NO.	DESCRIPTION	CAN	EUR	GENE			REMARKS
1	6S5–W009A–00–94	CYLINDER HEAD ASSY	1	1	1			
2	6S5–11102–00–94	CYLINDER HEAD ASSY	1	1	1			
3	6S5–11133–10	.GUIDE, VALVE 1	16	16	16			
4	91809–16001	.PIN, DOWEL	8	8	8			
5	91809–16001	.PIN, DOWEL	4	4	4			
6	90105–07009	.BOLT, FLANGE	24	24	24			
7	6S5–12228–00	BOLT	10	10	10			
8	90201–12039	WASHER, PLATE	10	10	10			
9	97013–06055	BOLT	3	3	3			
10	92903–06600	WASHER, PLATE	3	3	3			
11	6S5–11181–00	GASKET, CYLINDER HEAD 1	1	1	1			
12	6S5–11119–00	HANGER, ENGINE	2	2	2			
13	92014–06012	BOLT, BUTTON HEAD	4	4	4			
14	60E–12411–01	THERMOSTAT	1	1	1			
15	6S5–12413–00–94	COVER, THERMOSTAT	1	1	1			
16	90105–06035	BOLT, FLANGE	2	2	2			
17	6S5–12578–00	HOSE 3	1	1	1			
18	90447–28008	TUBE	1	1	1			
19	90467–240A0	CLIP	1	1	1			

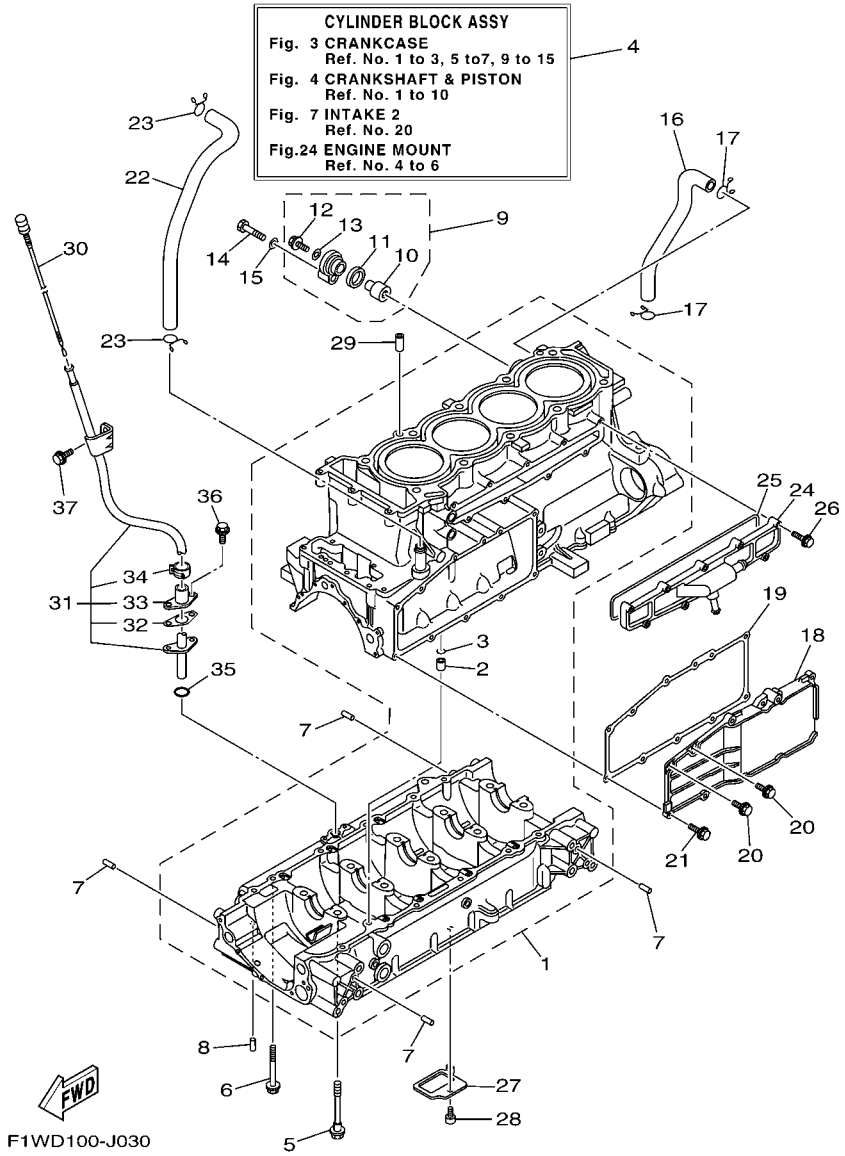

FIG. 3 CRANKCASE

REF. NO.	PART NO.	DESCRIPTION	CAN	EUR	GENE			REMARKS
1	6S5–15100–01–94	CRANKCASE ASSY	1	1	1			
2	99530–10114	.PIN, DOWEL	1	1	1			
3	93210–11453	.O-RING	1	1	1			
4	6S5–W009B–00–94	CYLINDER BLOCK ASSY	1	1	1			
5	90105–10071	BOLT, FLANGE	10	10	10			
6	95814–06070	BOLT, FLANGE	12	12	12			
7	93606–12019	PIN, DOWEL	8	8	8			
8	93604–10M03	PIN, DOWEL	2	2	2			
9	69J–11301–10	ANODE COVER ASSY	1	1	1			
10	68V–11325–02	.ANODE	1	1	1			
11	67F–11328–00	.GROMMET, ANODE	1	1	1			
12	90105–06M07	.BOLT, FLANGE	1	1	1			
13	90430–06M03	.GASKET	1	1	1			
14	97095–08040	BOLT	1	1	1			
15	92995–08600	WASHER	1	1	1			
16	6S5–11377–00	HOSE	1	1	1			
17	90467–190A0	CLIP	2	2	2			
18	6S5–1131M–00–9S	COVER	1	1	1			
19	6S5–13557–00	GASKET	1	1	1			
20	95024–06014	BOLT, FLG.(SMALL HEAD)	2	2	2			
21	95024–06020	BOLT, FLG.(SMALL HEAD)	9	9	9			
22	6S5–11126–00	PIPE, BREATHER 3	1	1	1			
23	90467–190A0	CLIP	2	2	2			
24	6S5–12469–01–94	JOINT 1	1	1	1			
25	6S5–12517–01	GASKET, WATER INLET	1	1	1			
26	95023–06025	BOLT	9	9	9			
27	6S5–13337–00	PLATE, BAFFLE LOWER	1	1	1			

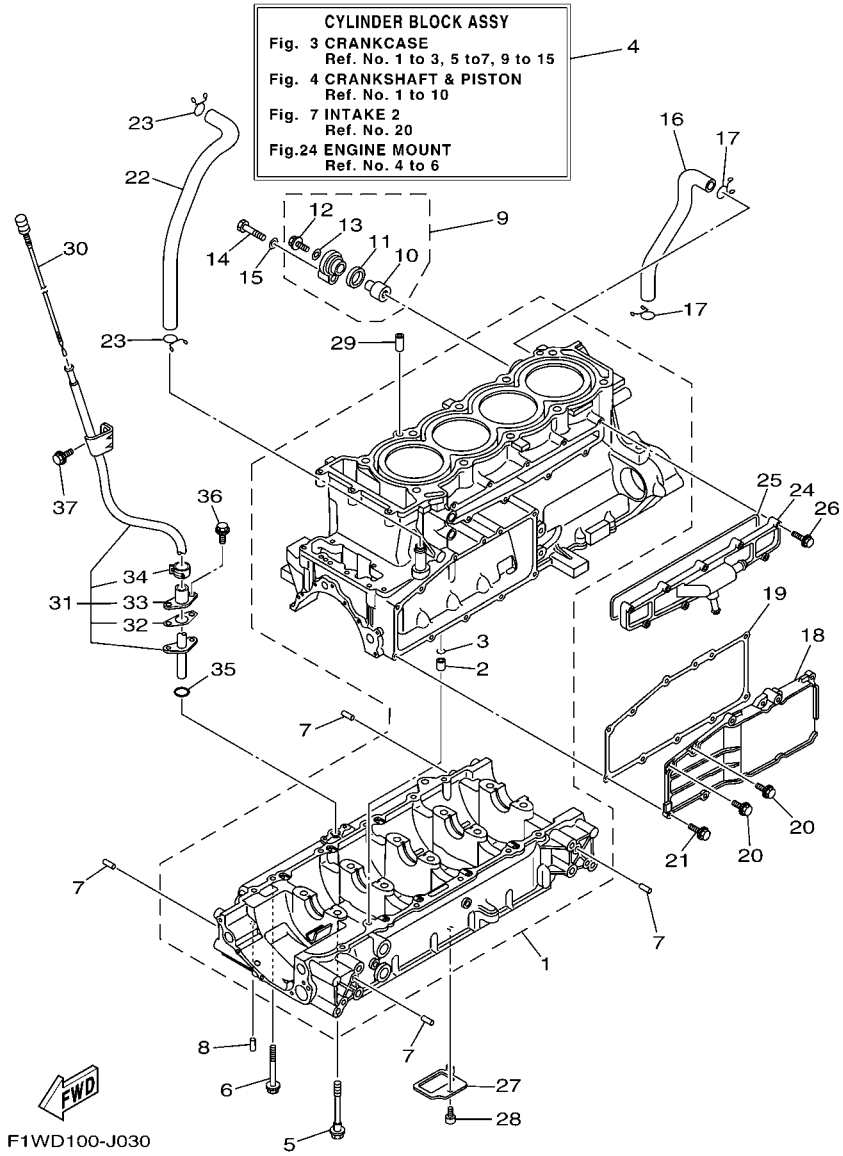

FIG. 3 CRANKCASE

REF. NO.	PART NO.	DESCRIPTION	CAN	EUR	GENE			REMARKS
28	90110–06182	BOLT, HEXAGON SOCKET HEAD	1	1	1			
29	99530–10114	PIN, DOWEL	2	2	2			
30	6S5–15362–00	PLUG, OIL LEVEL	1	1	1			
31	6S5–8572F–10	PIPE, OIL LEVEL	1	1	1			
32	6BH–1319K–00	.PLATE	1	1	1			
33	6BH–85516–00	.SPACER	1	1	1			Go to P/N : PE0-WV-100008
34	90467–150A1	.CLIP	1	1	1			
35	93210–12790	O-RING	1	1	1			
36	90109–06268	BOLT	2	2	2			
37	95023–06012	BOLT	1	1	1			

PARTS NEWS

YAMAHA
YAMAHA MOTOR CO., LTD.
2500 SHINGAI IWATA SHIZUOKA JAPAN

Date: May 12, 2010

News No.PE0-WV-100008

Signature: F. Takahashi

Cause ☑ Revision Notice ☐ Correction ☐ Sales Unit Change ☐ Others

Model	See the"List of Models and CATALOGUE No's below."
Subject	PARTS CATALOGUE CORRECTIONS
CATALOGUE NO.	See the"List of Models and CATALOGUE No's below."

Time of YPEC Revision Text, Illustration --> May/31/2010 PDF Replace --> May/31/2010

(YPEC = Yamaha Parts Electrical Catalogue = Website parts catalogue)

1. LIST of Models and CATALOGUE No's.

The applicable MODELS, MODEL CODES, and CATALOGUE No's are as follows.

CATALOGUE No.	Model	Mode code	DESTINATION	Applicable Serial No.
1JF1W-110E1	FX1800A-J	F1WD	USA/CAN	F1W-820801 and follwing
1JF1W-100E1		F1WE	OCE	F1W-820201 and follwing
1JF1W-300E1		F1WF	EUR	F1W-820501 and follwing
1JF1W-110EA	FX1800-J	F1WG	USA/CAN	F1W-820701 and follwing
1JF1W-100EA		F1WH	OCE	Not applicable
1JF1W-300EA		F1WJ	EUR	Not applicable
1JF2R-110E1	GX1800-J	F2R4	USA/CAN	F2R-803910 and follwing
1JF2R-100E1		F2R5	OCE	F2R-804300 and follwing
1JF2R-300E1		F2R6	EUR	Not applicable
1JF2C-110E1	GX1800A-J	F2C7	USA/CAN	F2C-804601 and follwing
1JF2C-100E1		F2C8	OCE	F2C-804901 and follwing
1JF2C-300E1		F2C9	EUR	Not applicable

2. LIST CORRECTION

FIG. 3 CRANKCASE SECTION (This FIG in the parts catalogue is a new content.)

Ref.No.	OLD PART No.	NEW PART No.	PART NAME	Q'TY	INTERCHANGE ABILITY	REMARKS
31	**6S5-8572F-01**	6S5-8572F-10	PIPE, OIL LEVEL	1	○ B	**Revision**
32	**-**	6BH-1319K-00	.PLATE	1		**Add**
33	**-**	6BH-85516-00	.SPACER	1		**Add**
34	**-**	90467-150A1	.CLIP	1		**Add**
36	**95880-06014**	90109-06268	BOLT	**1**-->2	○ B	**Revision**
38	**90338-06012**	-	PLUG	1		**Delete**

* The parts marked with ○-○ indicates interchangeability with a set.

3. ILLUSTRATION CORRECTION

Previous type

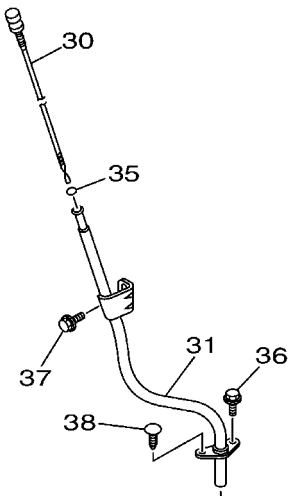

NEW type

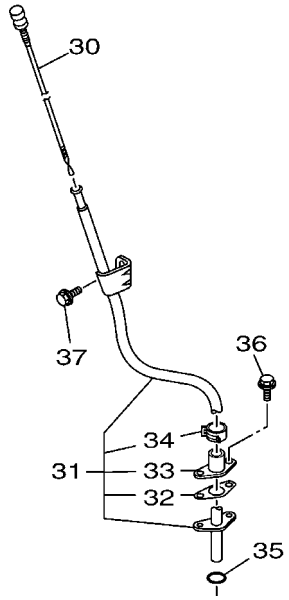

Thank you very much for your cooperation.

Parts Manager Check	Service Manager Check	Parts Manager File

YAMAHA MOTOR CO.,LTD
2500 Shingai Iwata Shizuoka 438-8501.Japan
Technical Publication Dept.

YAMAHA GENUINE Parts & Accessories

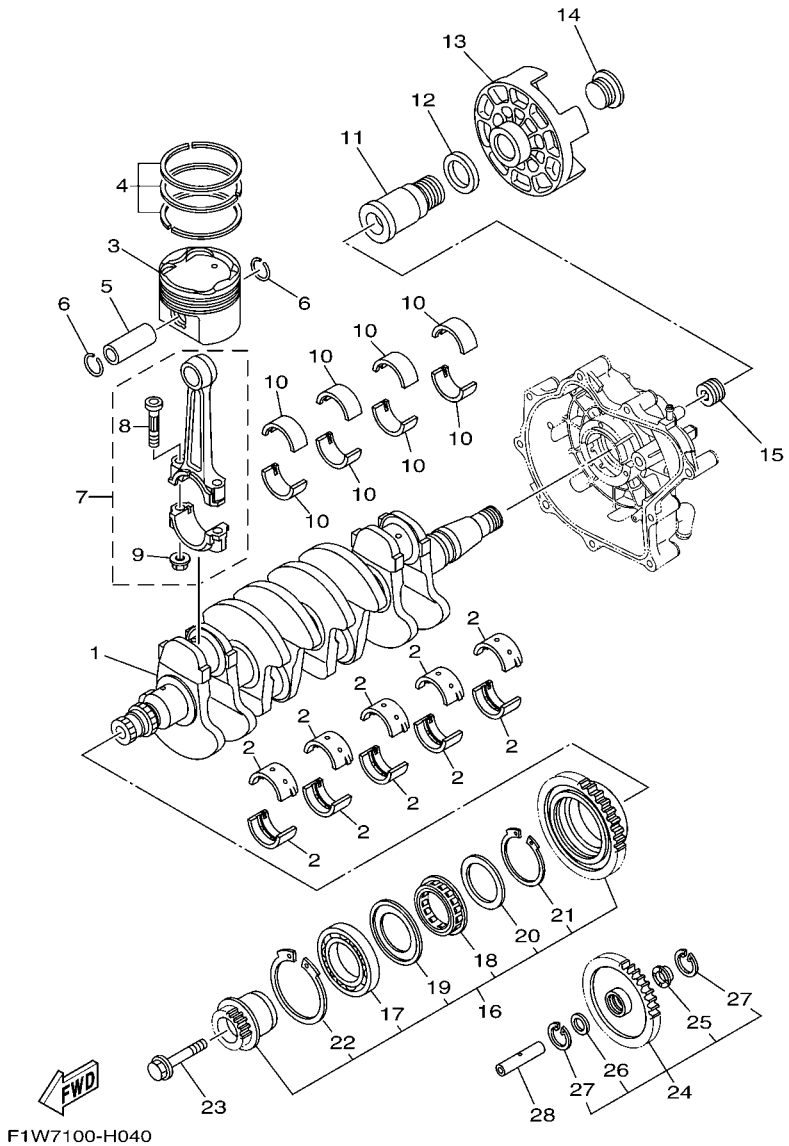

FIG. 4 CRANKSHAFT & PISTON

REF. NO.	PART NO.	DESCRIPTION	CAN	EUR	GENE			REMARKS
1	6S5–11411–00	CRANKSHAFT	1	1	1			
2	6S5–11416–00	PLANE BEARING, CRANKSHAFT 1	10	10	10			UR BROWN
	6S5–11416–10	PLANE BEARING, CRANKSHAFT 1	10	10	10			UR BLACK
	6S5–11416–20	PLANE BEARING, CRANKSHAFT 1	10	10	10			UR BLUE
	6S5–11416–30	PLANE BEARING, CRANKSHAFT 1	10	10	10			UR GREEN
	6S5–11416–40	PLANE BEARING, CRANKSHAFT 1	10	10	10			UR YELLOW
3	6S5–11631–10–B0	PISTON (STD)	4	4	4			
4	6S5–11603–00	PISTON RING SET (STD)	4	4	4			
5	6S5–11633–00	PIN, PISTON	4	4	4			
6	93450–24028	CIRCLIP	8	8	8			
7	6S5–11650–00	CONNECTING ROD ASSY	4	4	4			
8	6S5–11654–00	.BOLT, CONNECTING ROD	2	2	2			
9	90179–09379	.NUT	2	2	2			
10	6S5–11656–00	PLANE BEARING, CONNECTING ROD	8	8	8			UR BROWN
	6S5–11656–10	PLANE BEARING, CONNECTING ROD	8	8	8			UR BLACK
	6S5–11656–20	PLANE BEARING, CONNECTING ROD	8	8	8			UR BLUE
	6S5–11656–30	PLANE BEARING, CONNECTING ROD	8	8	8			UR GREEN
11	6S5–17572–01	SHAFT, TRANSFER	1	1	1			
12	6S5–12289–00	WASHER	1	1	1			
13	6S5–45813–01–94	FLANGE, COUPLING	1	1	1			
14	6S5–17525–01	HOLDER 2	1	1	1			
15	6S5–11459–01	NUT, SPECIAL	1	1	1			
16	6S5–17800–00	GEAR UNIT ASSY, TACHO. DRIVE	1	1	1			
17	93316–00901	.BEARING	1	1	1			
18	6S5–15657–00	.CLUTCH, ONEWAY	1	1	1			
19	6S5–17648–00	.WASHER	1	1	1			
20	6S5–17658–00	.WASHER	1	1	1			

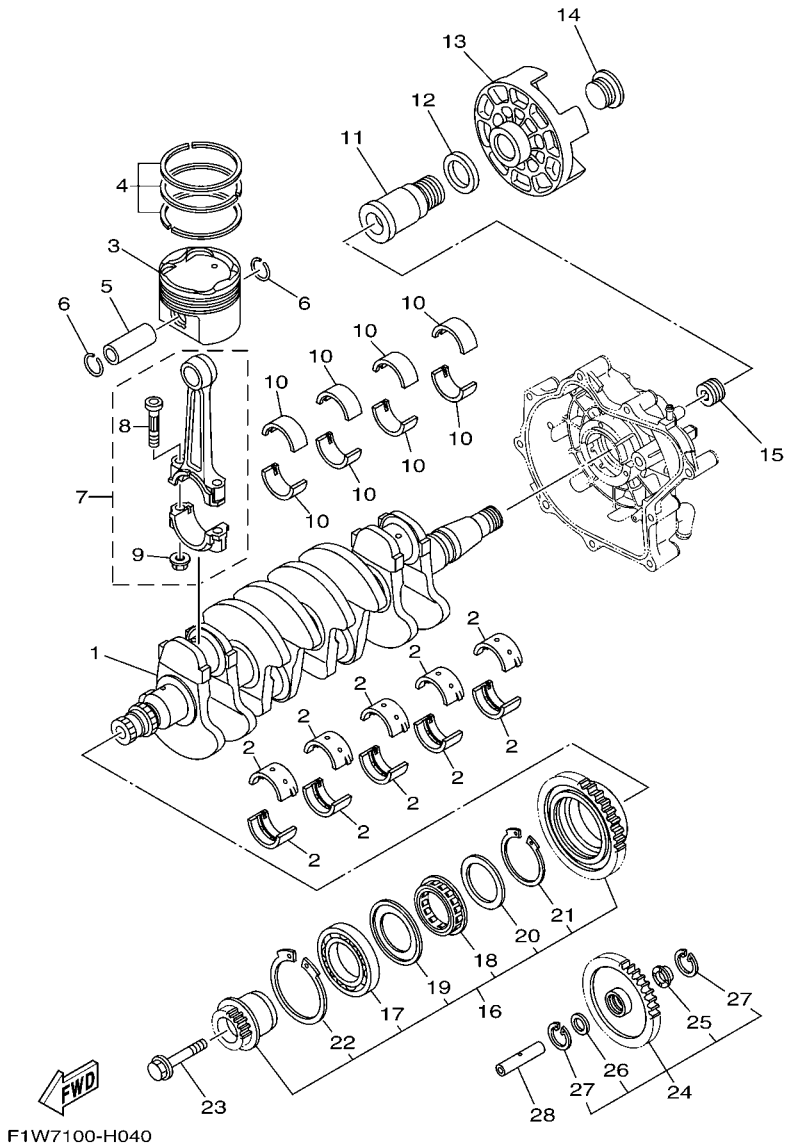

FIG. 4 CRANKSHAFT & PISTON

REF. NO.	PART NO.	DESCRIPTION	CAN	EUR	GENE			REMARKS
21	93450–63160	.CIRCLIP	1	1	1			
22	93450–75161	.CIRCLIP	1	1	1			
23	6S5–17031–00	BOLT	1	1	1			
24	6S5–W1783–10	DRIVE GEAR & COLLAR SET	1	1	1			
25	6S5–17529–00	.WASHER, THRUST	1	1	1			
26	90201–132G5	.WASHER, PLATE	1	1	1			
27	99009–24700	.CIRCLIP	2	2	2			
28	6S5–17553–00	SHAFT, MIDDLE DRIVEN	1	1	1			

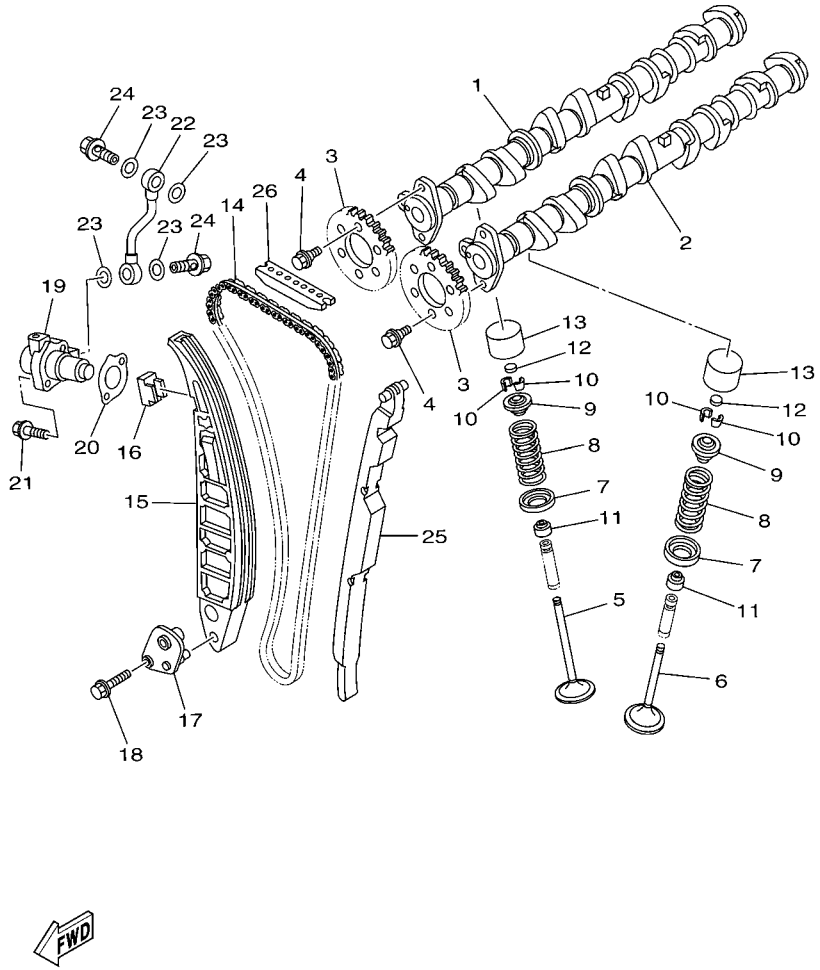

F1W1100-G050

FIG. 5 VALVE

REF. NO.	PART NO.	DESCRIPTION	CAN	EUR	GENE			REMARKS
1	6S5–12171–00	CAMSHAFT 1	1	1	1			
2	6S5–12181–00	CAMSHAFT 2	1	1	1			
3	6D3–12176–00	SPROCKET, CAM CHAIN	2	2	2			
4	90105–07004	BOLT, FLANGE	4	4	4			
5	6S5–12111–00	VALVE, INTAKE	8	8	8			
6	6S5–12121–00	VALVE, EXHAUST	8	8	8			
7	6S5–12116–00	SEAT, VALVE SPRING	16	16	16			
8	6S5–12113–00	SPRING, VALVE INNER	16	16	16			
9	6S5–12117–00	RETAINER, VALVE SPRING	16	16	16			
10	3LD–12118–00	COTTER, VALVE	32	32	32			
11	51Y–12119–00	SEAL, VALVE STEM	16	16	16			
12	3LD–12168–00	PAD, ADJUSTING (1.20)	16	16	16			UR
	3LD–12168–20	PAD, ADJUSTING (1.25)	16	16	16			UR
	3LD–12168–40	PAD, ADJUSTING (1.30)	16	16	16			UR
	3LD–12168–60	PAD, ADJUSTING (1.35)	16	16	16			UR
	3LD–12168–80	PAD, ADJUSTING (1.40)	16	16	16			UR
	3LD–12168–A0	PAD, ADJUSTING (1.45)	16	16	16			UR
	3LD–12168–F0	PAD, ADJUSTING (1.50)	16	16	16			UR
	3LD–12168–H1	PAD, ADJUSTING (1.55)	16	16	16			UR
	3LD–12168–K1	PAD, ADJUSTING (1.60)	16	16	16			UR
	3LD–12168–M1	PAD, ADJUSTING (1.65)	16	16	16			UR
	3LD–12168–R1	PAD, ADJUSTING (1.70)	16	16	16			UR
	3LD–12168–U1	PAD, ADJUSTING (1.75)	16	16	16			UR
	3LD–12168–W1	PAD, ADJUSTING (1.80)	16	16	16			UR
	3LD–12168–Y1	PAD, ADJUSTING (1.85)	16	16	16			UR
	3LD–12169–11	PAD, ADJUSTING (1.90)	16	16	16			UR
	3LD–12169–31	PAD, ADJUSTING (1.95)	16	16	16			UR

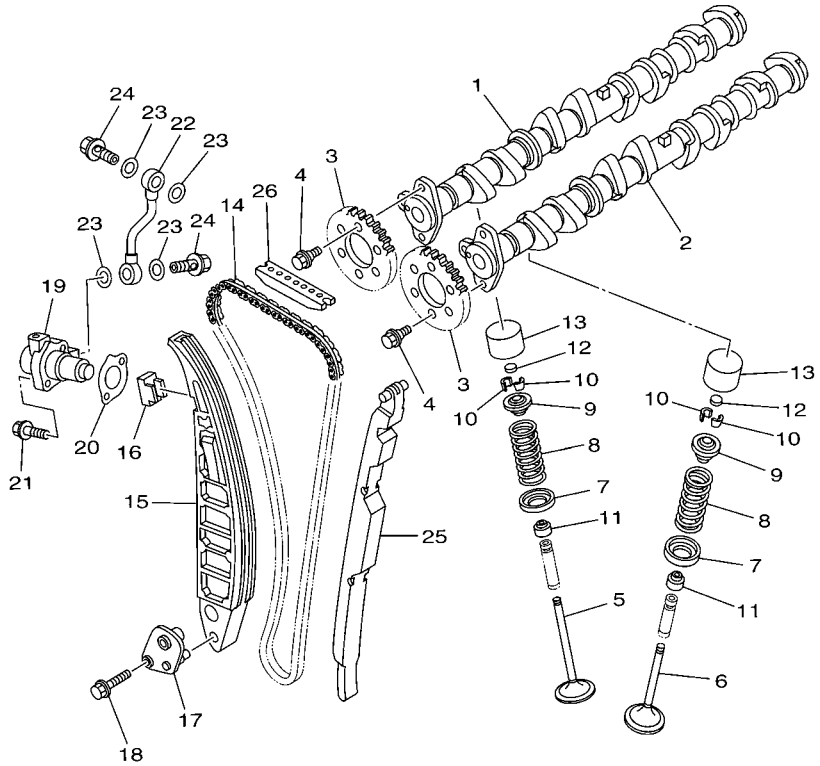

F1W1100-G050

FIG. 5 VALVE

REF. NO.	PART NO.	DESCRIPTION	CAN	EUR	GENE			REMARKS
12	3LD–12169–50	PAD, ADJUSTING (2.00)	16	16	16			UR
	3LD–12169–70	PAD, ADJUSTING (2.05)	16	16	16			UR
	3LD–12169–90	PAD, ADJUSTING (2.10)	16	16	16			UR
	3LD–12169–E0	PAD, ADJUSTING (2.15)	16	16	16			UR
	3LD–12169–G0	PAD, ADJUSTING (2.20)	16	16	16			UR
	3LD–12169–J0	PAD, ADJUSTING (2.25)	16	16	16			UR
	3LD–12169–L0	PAD, ADJUSTING (2.30)	16	16	16			UR
13	6S5–12153–00	LIFTER, VALVE	16	16	16			
14	94591–66152	CHAIN	1	1	1			
15	6S5–12252–00	DAMPER, CHAIN 2	1	1	1			
16	6S5–12215–00	CAP, TENSIONER CASE	1	1	1			
17	6S5–12279–00	PLATE	1	1	1			
18	95814–06030	BOLT, FLANGE	2	2	2			
19	6S5–12210–00	TENSIONER ASSY, CAM CHAIN	1	1	1			
20	6S5–121E2–00	GASKET	1	1	1			
21	91380–06025	BOLT	2	2	2			
22	6S5–13418–00	PIPE, OIL 2	1	1	1			
23	90430–10007	GASKET	4	4	4			
24	90401–10040	BOLT, UNION	2	2	2			
25	6S5–12251–00	DAMPER, CHAIN 1	1	1	1			
26	6S5–12241–00	GUIDE, STOPPER 2	1	1	1			

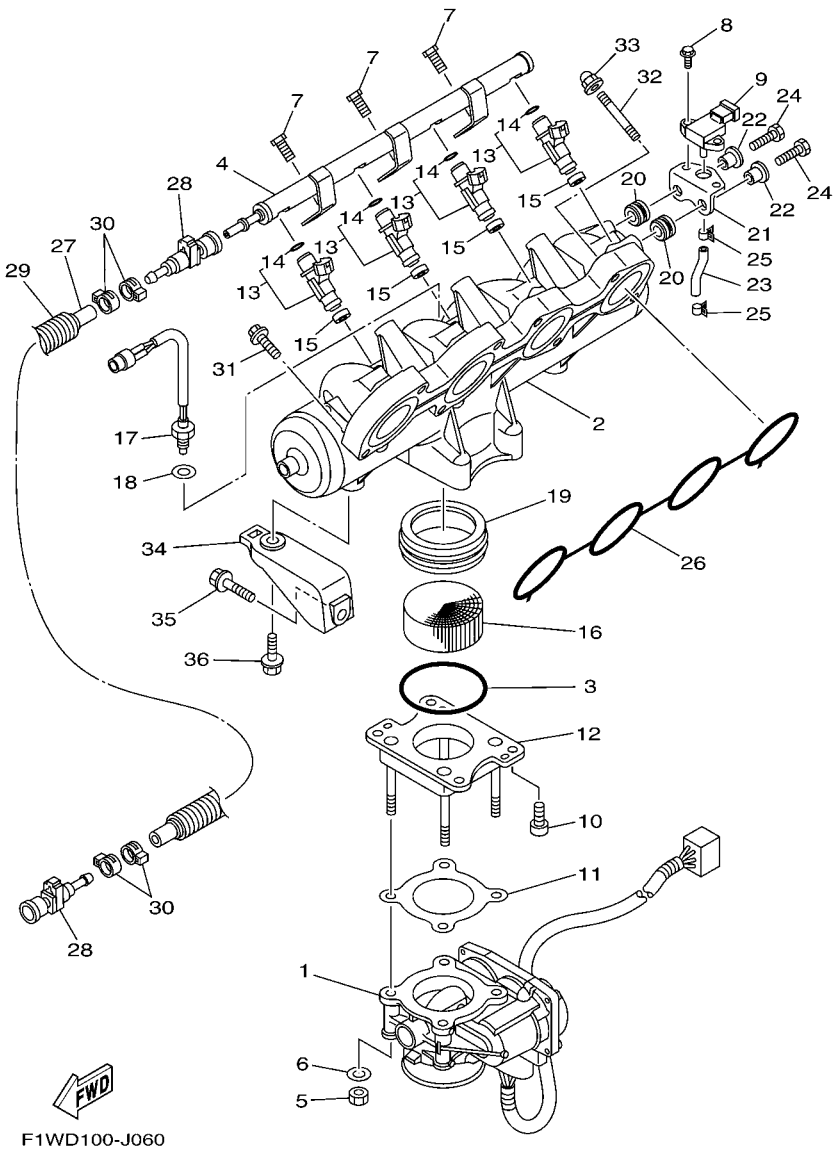

FIG. 6 INTAKE 1

REF. NO.	PART NO.	DESCRIPTION	CAN	EUR	GENE			REMARKS
1	6S5–13750–00	THROTTLE BODY ASSY	1	1	1			
2	6S5–13641–00	MANIFOLD 1	1	1	1			
3	6S5–14147–00	O-RING	1	1	1			
4	6S5–12880–00	DELIVERY PIPE	1	1	1			
5	6P2–13588–00	NUT	4	4	4			
6	6P2–13578–00	WASHER	4	4	4			
7	63P–14446–00	BOLT	3	3	3			
8	6S5–13573–00	BOLT 1	2	2	2			
9	6S5–82380–00	SENSOR, PRESSURE	1	1	1			
10	6S5–14496–00	BOLT	4	4	4			
11	6S5–14536–00	GASKET	1	1	1			
12	6S5–14360–00	THROTTLE DAMPER ASSY	1	1	1			
13	6S5–13761–00	INJECTOR	4	4	4			
14	60E–14147–00	.O-RING	1	1	1			
15	8FP–13556–00	GASKET, MANIFOLD	4	4	4			
16	6D3–1444B–00	RIBBON	1	1	1			
17	6S5–85886–00	SENSOR, AIR TEMPERATURE	1	1	1			
18	6S5–14285–00	WASHER	1	1	1			
19	6S5–14457–00	HOLDER	1	1	1			
20	6S5–14445–00	GROMMET	2	2	2			
21	6S5–14291–00	BRACKET 1	1	1	1			
22	6S5–14534–00	COLLAR	2	2	2			
23	69J–13532–00	HOSE, VACUUM SENSING 3	1	1	1			
24	6S5–14446–00	BOLT	2	2	2			
25	6S5–14159–00	CLIP	2	2	2			
26	6S5–13645–00	GASKET, MANIFOLD 1	1	1	1			
27	6S5–14294–02	HOSE	1	1	1			

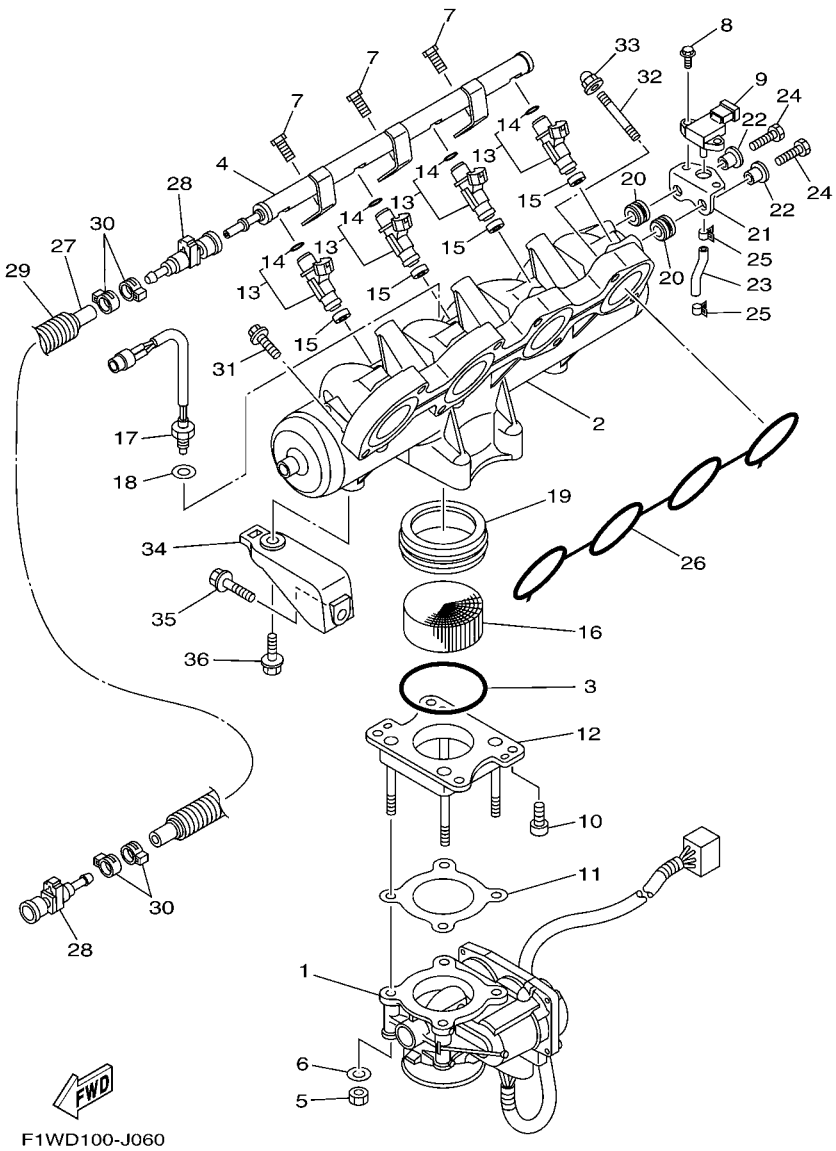

FIG. 6 INTAKE 1

REF. NO.	PART NO.	DESCRIPTION	CAN	EUR	GENE			REMARKS
28	6S5–24300–01	FUEL PIPE JOINT	2	2	2			
29	90447–19016	TUBE	1	1	1			
30	90450–17M17	HOSE CLAMP ASSY	4	4	4			
31	90119–08022	BOLT, WITH WASHER	6	6	6			
32	90116–08032	BOLT, STUD	2	2	2			
33	90176–08080	NUT, CROWN	2	2	2			
34	6S5–14413–00–94	STAY	2	2	2			
35	90119–08043	BOLT, WITH WASHER	2	2	2			
36	90119–08099	BOLT, WITH WASHER	2	2	2			

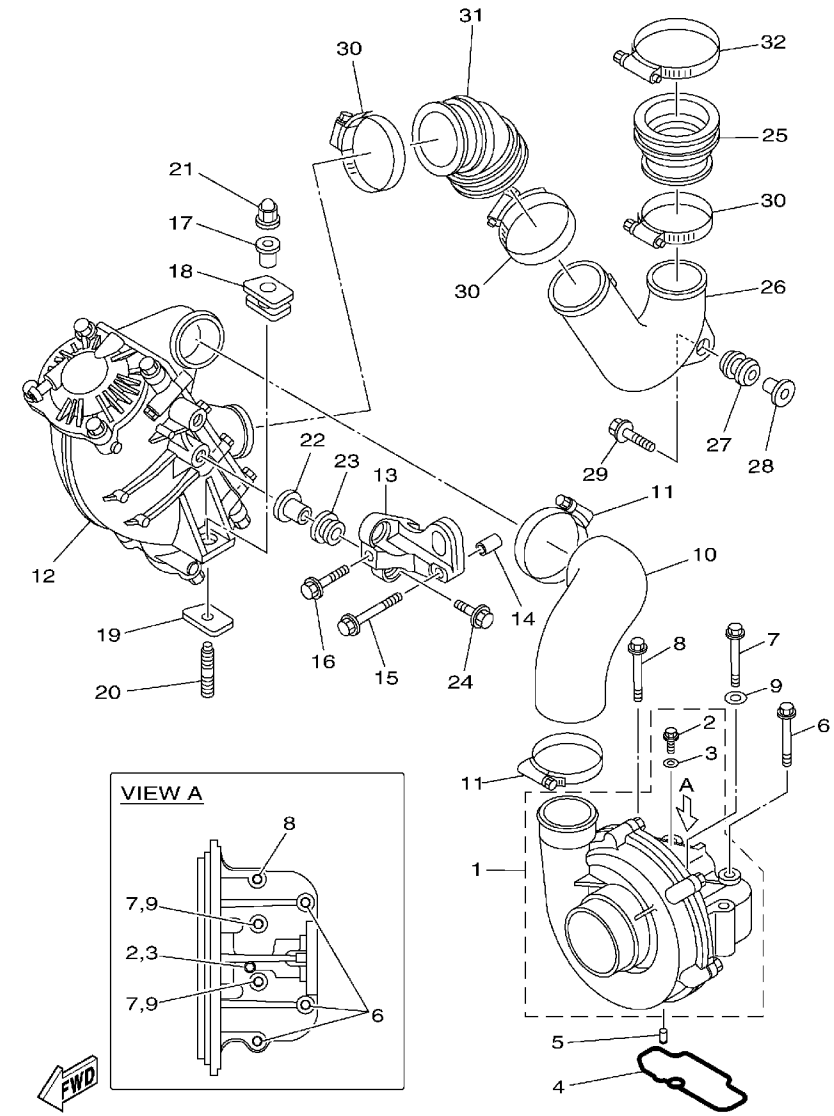

F1W7010H0701

FIG. 7 INTAKE 2

REF. NO.	PART NO.	DESCRIPTION	CAN	EUR	GENE			REMARKS
1	6S5–141A0–02	SUPER CHARGER ASSY	1	1	1			
2	90105–05020	.BOLT, FLANGE	1	1	1			
3	6S5–14199–00	.GASKET	1	1	1			
4	6S5–1416A–00	O-RING	1	1	1			
5	93604–10M03	PIN, DOWEL	2	2	2			
6	95814–08065	BOLT, FLANGE	3	3	3			
7	95814–06065	BOLT, FLANGE	2	2	2			
8	90105–08188	BOLT, FLANGE	1	1	1			
9	90201–06028	WASHER, PLATE	2	2	2			
10	6S5–14349–00	PIPE	1	1	1			
11	90450–75003	HOSE CLAMP ASSY	2	2	2			
12	6S5–13670–00	AIR COORER ASSY.	1	1	1			
13	6S5–13691–00–94	BRACKET, AIR COOLER	1	1	1			
14	99590–14016	PIN, DOWEL	2	2	2			
15	90119–10047	BOLT, WITH WASHER	1	1	1			
16	90119–10046	BOLT, WITH WASHER	1	1	1			
17	6S5–14495–00	COLLAR	1	1	1			
18	6S5–14435–00	GROMMET	1	1	1			
19	6S5–14243–00	PLATE	1	1	1			
20	90116–10044	BOLT, STUD	1	1	1			
21	90176–10001	NUT, CROWN	1	1	1			
22	90387–11002	COLLAR	2	2	2			
23	90480–21M63	GROMMET	2	2	2			
24	90119–10011	BOLT, WITH WASHER	2	2	2			
25	6S5–14148–00	PIPE	1	1	1			
26	6S5–13651–00	PIPE, BOOST	1	1	1			
27	90480–22M15	GROMMET	1	1	1			

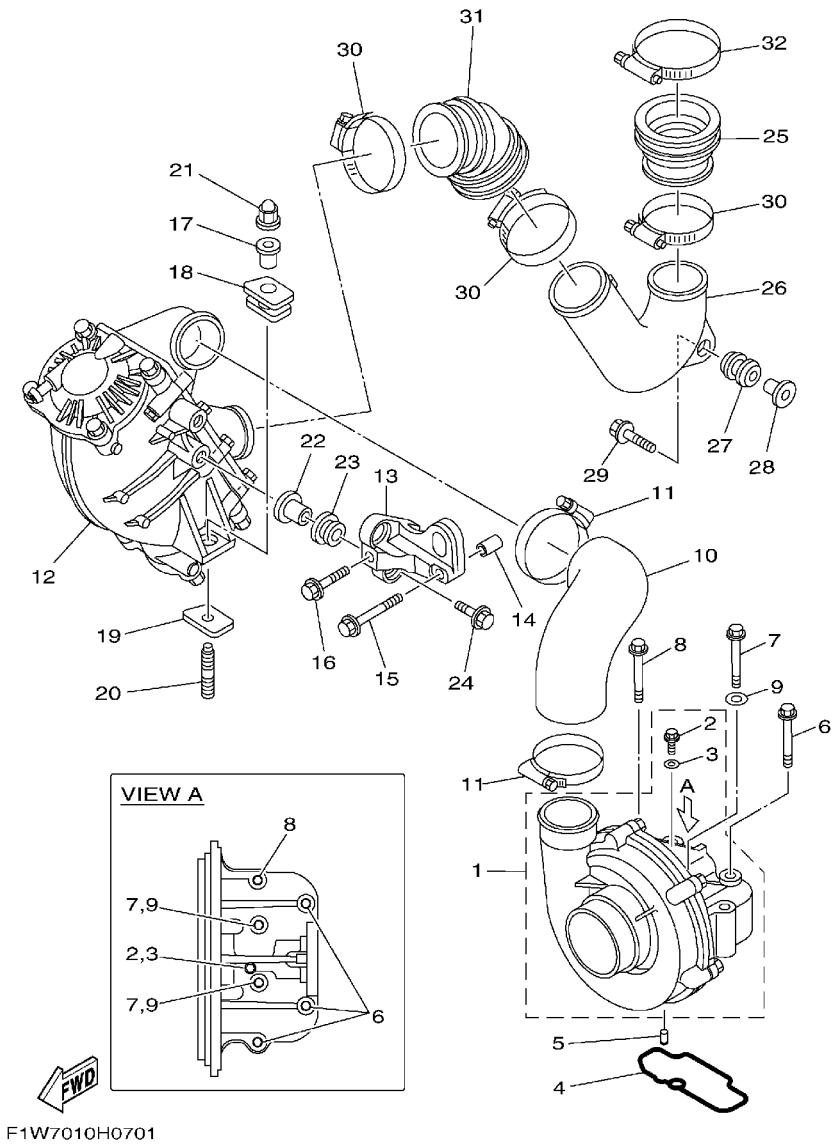

F1W7010H0701

FIG. 7 INTAKE 2

REF. NO.	PART NO.	DESCRIPTION	CAN	EUR	GENE			REMARKS
28	6D3–14495–00	COLLAR	1	1	1			
29	90119–08M22	BOLT, WITH WASHER	1	1	1			
30	90450–70005	HOSE CLAMP ASSY	3	3	3			
31	6S5–13652–00	PIPE, INTAKE	1	1	1			
32	90450–70M13	HOSE CLAMP ASSY	1	1	1			

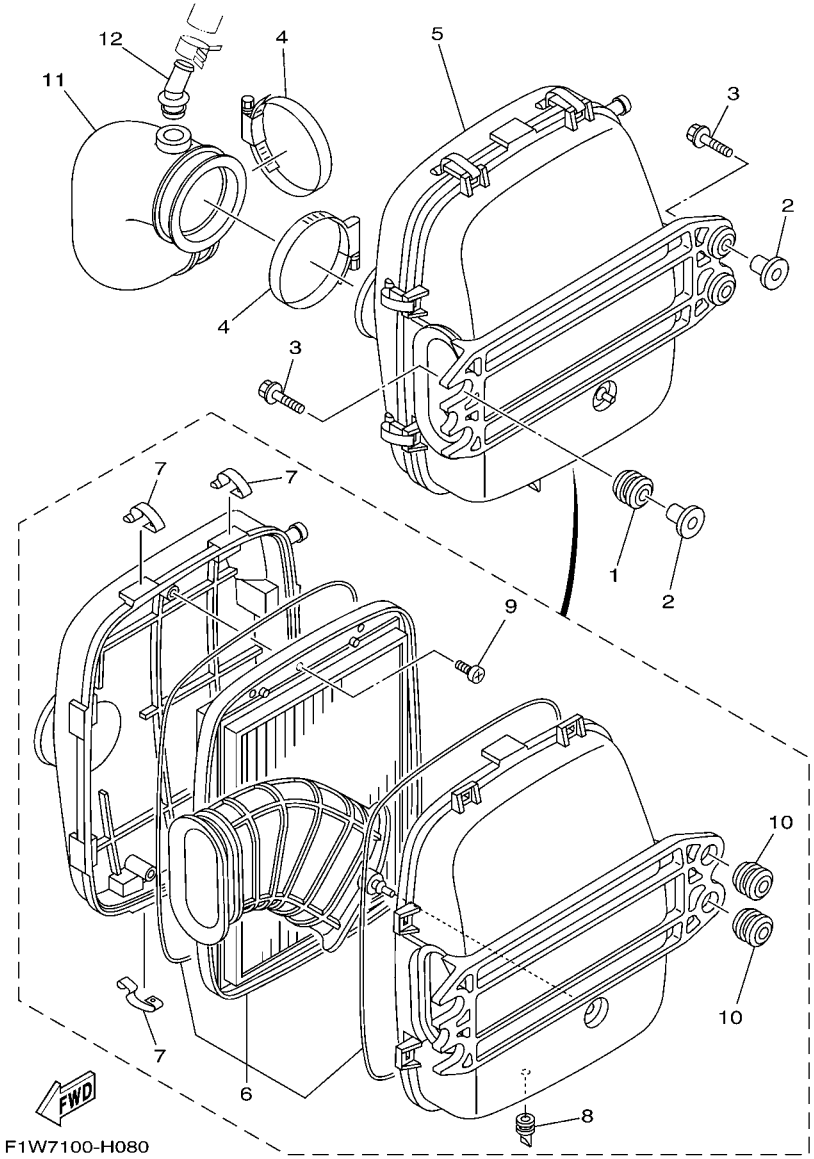

FIG. 8 INTAKE 3

REF. NO.	PART NO.	DESCRIPTION	CAN	EUR	GENE			REMARKS
1	90480–22M15	GROMMET	2	2	2			
2	6D3–14495–00	COLLAR	4	4	4			
3	90119–08M22	BOLT, WITH WASHER	4	4	4			
4	90460–90M11	CLAMP, HOSE	2	2	2			
5	6S5–E4410–01	AIR CLEANER ASSY.	1	1	1			
6	6S5–E4451–00	.ELEMENT, AIR CLEANER	1	1	1			
7	6S5–E4436–00	.HOOK	8	8	8			
8	6S5–G2717–00	.RUBBER, SEAL 2	1	1	1			
9	97780–60516	.SCREW, TAPPING	3	3	3			
10	90480–22801	.GROMMET	2	2	2			
11	6S5–E4419–00	PIPE	1	1	1			
12	6S5–R1142–00	CONNECTION	1	1	1			

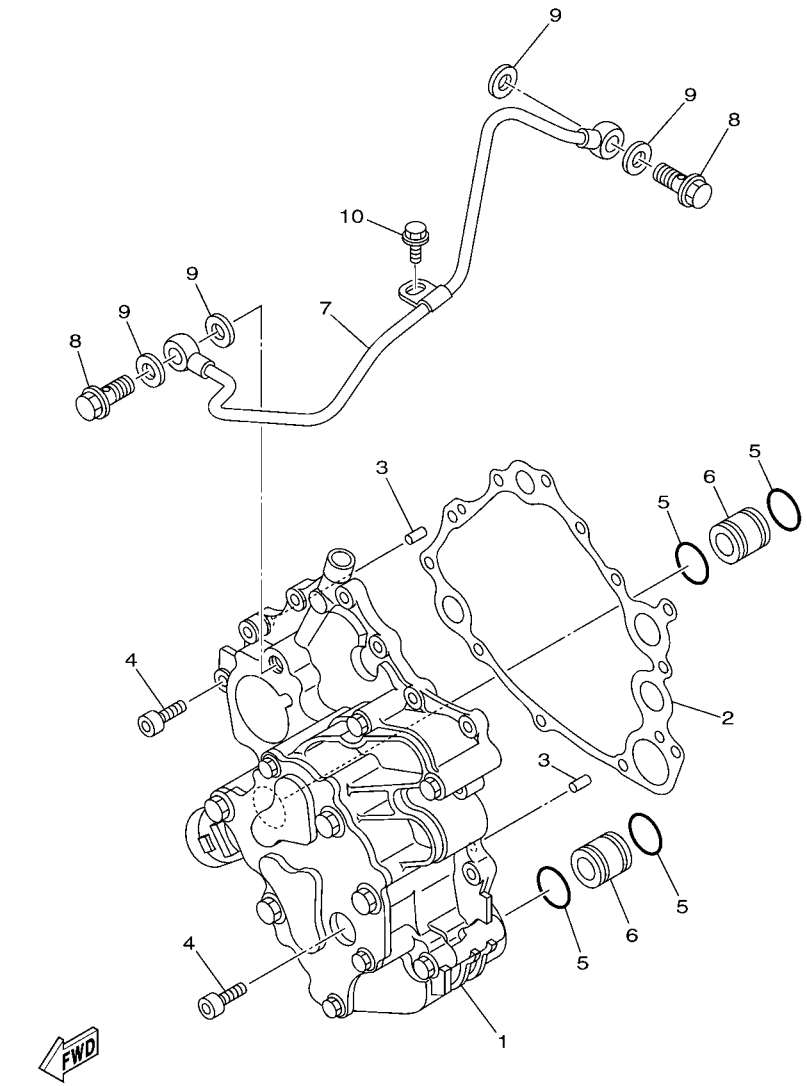

F1W1100-G090

FIG. 9 OIL PUMP

REF. NO.	PART NO.	DESCRIPTION	CAN	EUR	GENE			REMARKS
1	6S5–13300–00	OIL PUMP ASSY	1	1	1			
2	6S5–13563–00	GASKET	1	1	1			
3	93606–12019	PIN, DOWEL	2	2	2			
4	91314–06020	BOLT, HEXAGON SOCKET HEAD	12	12	12			
5	93210–21631	O-RING	4	4	4			
6	6S5–13446–00	CONNECTOR	2	2	2			
7	6S5–13416–00	PIPE, OIL 1	1	1	1			
8	90401–10040	BOLT, UNION	2	2	2			
9	90430–10007	GASKET	4	4	4			
10	95023–06012	BOLT	1	1	1			

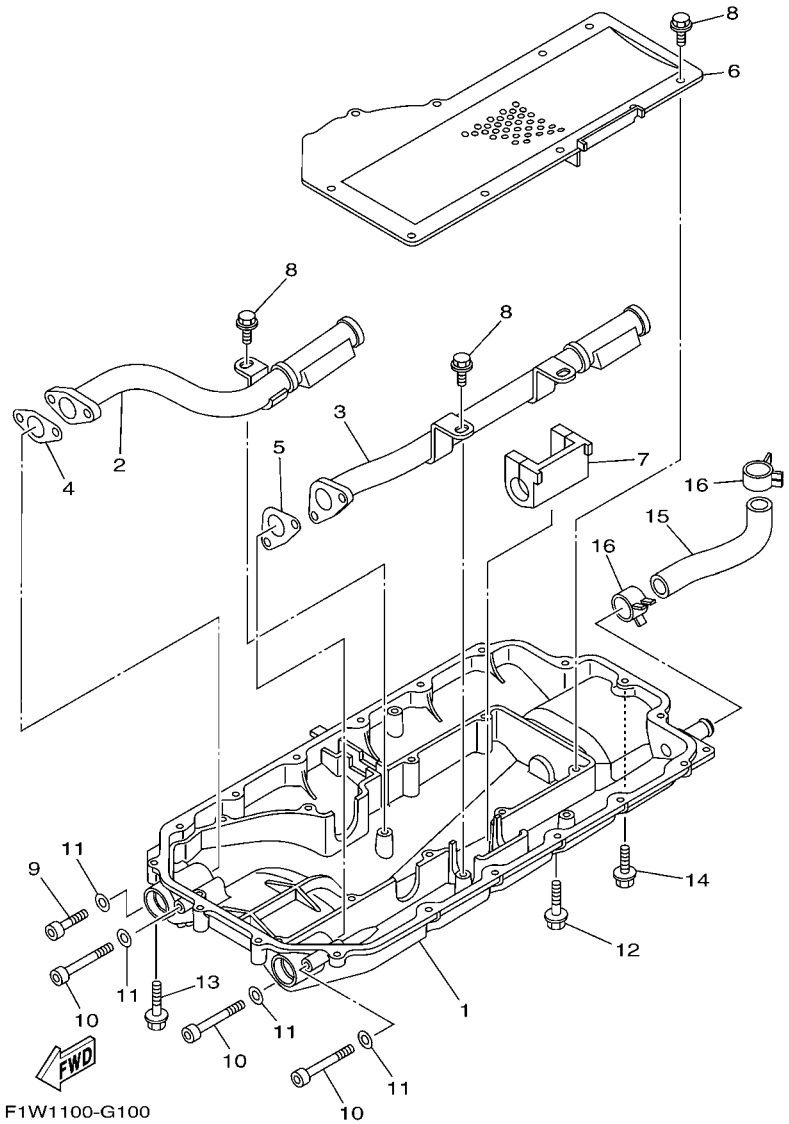

FIG. 10 OIL PAN

REF. NO.	PART NO.	DESCRIPTION	CAN	EUR	GENE			REMARKS
1	6S5–1310A–00–94	PAN, OIL	1	1	1			
2	6S5–13405–00	OIL PIPE COMP. 1	1	1	1			
3	6S5–13406–00	OIL PIPE COMP. 2	1	1	1			
4	6S5–13476–00	GASKET	1	1	1			
5	6S5–13477–00	GASKET	1	1	1			
6	6S5–13317–00	PLATE, BAFFLE	1	1	1			
7	6S5–15486–00	GROMMET	1	1	1			
8	95817–06014	BOLT, FLANGE	13	13	13			
9	91314–06035	BOLT, HEXAGON SOCKET HEAD	1	1	1			
10	91314–06060	BOLT, HEXAGON SOCKET HEAD	3	3	3			
11	90201–06028	WASHER, PLATE	4	4	4			
12	95024–06035	BOLT, FLG.(SMALL HEAD)	16	16	16			
13	95024–06030	BOLT, FLG.(SMALL HEAD)	1	1	1			
14	95024–06020	BOLT, FLG.(SMALL HEAD)	1	1	1			
15	6S5–11378–00	HOSE 2	1	1	1			
16	90467–200A0	CLIP	2	2	2			

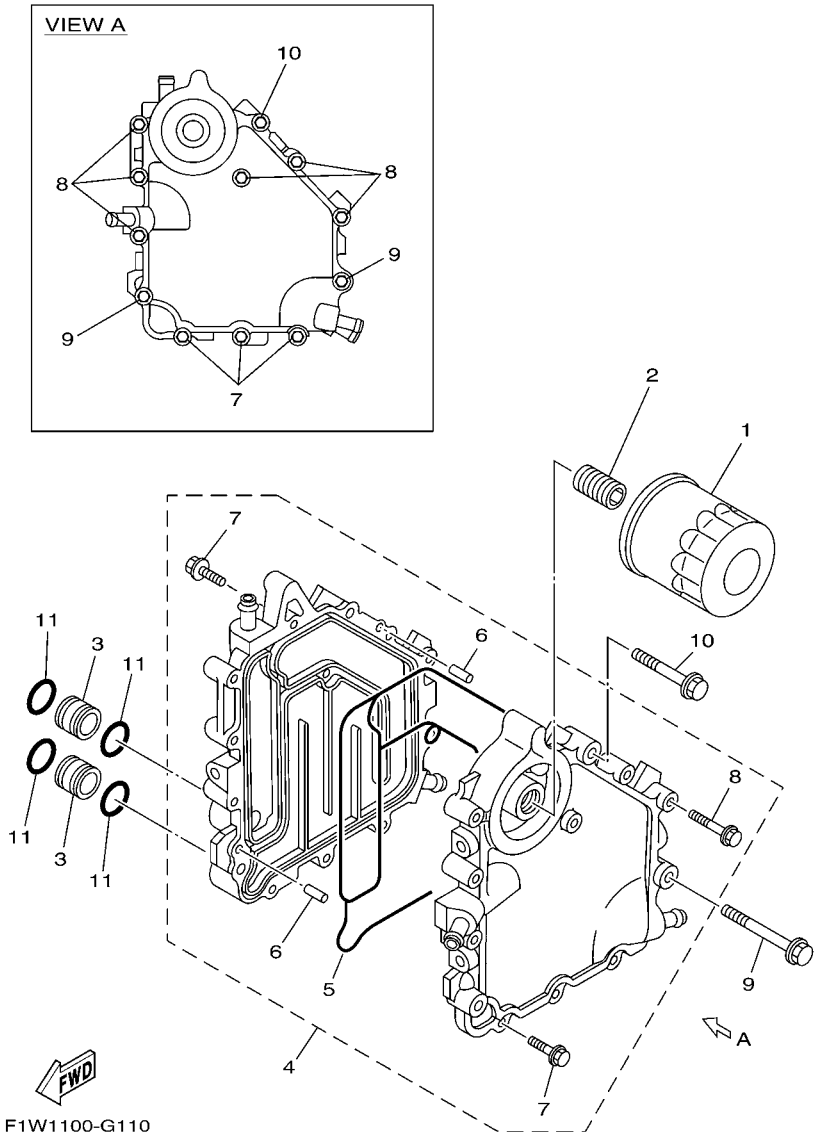

FIG. 11 OIL COOLER

REF. NO.	PART NO.	DESCRIPTION	CAN	EUR	GENE			REMARKS
1	69J–13440–01	ELEMENT ASSY, OIL CLEANER	1	1	1			
2	6S5–12858–00	BOLT, UNION	1	1	1			
3	60E–13446–00	CONNECTOR	2	2	2			
4	6S5–13470–00	OIL COOLER ASSY	1	1	1			
5	6S5–13556–00	.GASKET, MANIFOLD	1	1	1			
6	93604–10M03	.PIN, DOWEL	2	2	2			
7	90105–06M24	.BOLT, FLANGE	4	4	4			
8	90105–06M16	.BOLT, FLANGE	6	6	6			
9	90105–08169	BOLT, FLANGE	2	2	2			
10	90105–08170	BOLT, FLANGE	1	1	1			
11	93210–18322	O-RING	4	4	4			

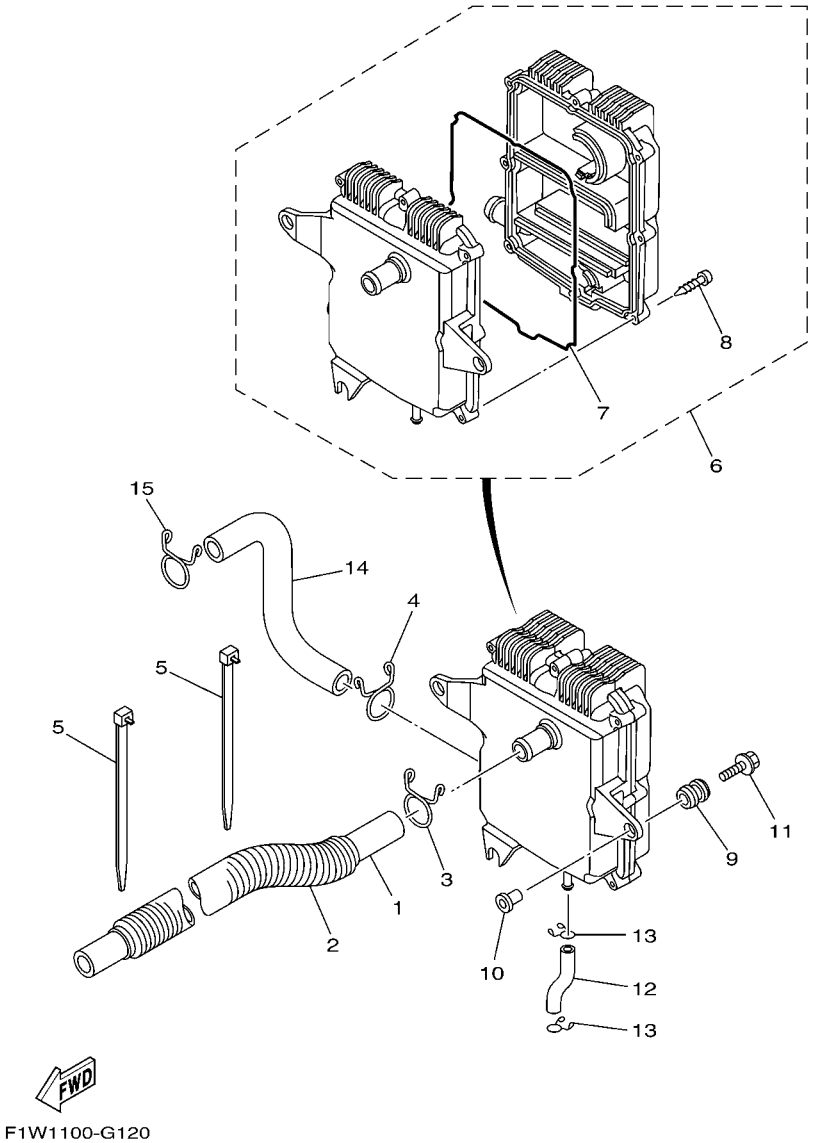

FIG. 12 BREATHER OIL

REF. NO.	PART NO.	DESCRIPTION	CAN	EUR	GENE			REMARKS
1	6S5–11166–00	PIPE, BREATHER 1	1	1	1			
2	90446–30MF1	HOSE (L600)	1	1	1			
3	90467–240A2	CLIP	1	1	1			
4	90467–240A2	CLIP	1	1	1			
5	90465–14M66	CLAMP	2	2	2			
6	6S5–11160–00	BREATHER ASSY	1	1	1			
7	93212–02001	.O-RING	1	1	1			Go to P/N : PE0-WV-100008
8	97780–60530	.SCREW, TAPPING	8	8	8			
9	61N–82317–00	DAMPER, IGNITION COIL	3	3	3			
10	90387–06119	COLLAR	3	3	3			
11	95824–06030	BOLT, FLANGE	3	3	3			
12	6S5–11125–00	PIPE, BREATHER 4	1	1	1			
13	90467–11019	CLIP	2	2	2			
14	6S5–11167–00	PIPE, BREATHER 2	1	1	1			
15	90467–240A2	CLIP	2	2	2			Go to P/N : PE0-WV-100008

PARTS NEWS

YAMAHA
YAMAHA MOTOR CO., LTD.
2500 SHINGAI IWATA SHIZUOKA JAPAN

Date:May 12, 2010

News No.PE0-WV-100008

Signature: F. Takahashi

Cause ☑ Revision Notice ☐ Correction ☐ Sales Unit Change ☐ Others

Model	See the"List of Models and CATALOGUE No's below."
Subject	PARTS CATALOGUE CORRECTIONS
CATALOGUE NO.	See the"List of Models and CATALOGUE No's below."

Time of YPEC Revision Text, Illustration --> May/31/2010 PDF Replace --> May/31/2010

(YPEC = Yamaha Parts Electrical Catalogue = Website parts catalogue)

4. LIST of Models and CATALOGUE No's.

The applicable MODELS, MODEL CODES, and CATALOGUE No's are as follows.

CATALOGUE No.	Model	Mode code	DESTINATION	Applicable Serial No.
1JF1W-110E1	FX1800A-J	F1WD	USA/CAN	Not applicable
1JF1W-100E1		F1WE	OCE	F1W-820201 and follwing
1JF1W-300E1		F1WF	EUR	F1W-820501 and follwing
1JF2R-110E1	GX1800-J	F2R4	USA/CAN	F2R-804101 and follwing
1JF2R-100E1		F2R5	OCE	F2R-804300 and follwing
1JF2R-300E1		F2R6	EUR	Not applicable
1JF2C-110E1	GX1800A-J	F2C7	USA/CAN	F2C-804801 and follwing
1JF2C-100E1		F2C8	OCE	F2C-804901 and follwing
1JF2C-300E1		F2C9	EUR	Not applicable

5. LIST CORRECTION

FIG.12 BREATHER OIL SECTION

Ref.No.	OLD PART No.	NEW PART No.	PART NAME	Q'TY	INTERCHANGE ABILITY	REMARKS
6	6S5-11160-00	**6BH-11160-00**	BREATHER ASSY	1	B	**Revision**
7	93212-02001	**-**	.O-RING	1		**Delete**
8	97780-60530	**-**	.SCREW, TAPPING	8		**Delete**
15	90467-240A2	**<--**	CLIP	2-->**1**	B	**Revision**
16	-	**90467-240A0**	CLIP	1	B	**Add**

* The parts marked with indicates interchangeability with a set.

6. ILLUSTRATION CORRECTION

Previous type

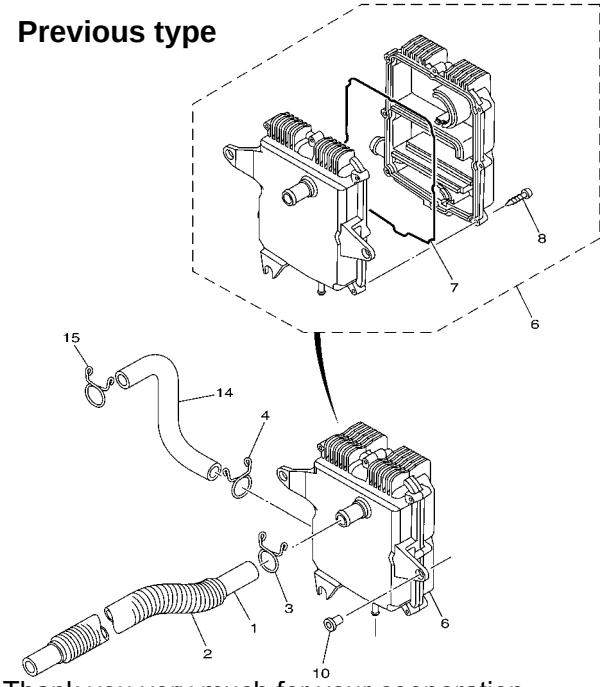

NEW type

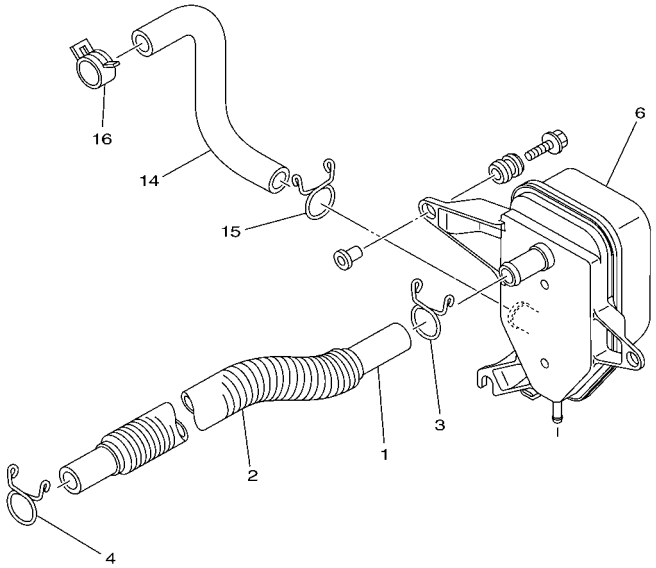

Thank you very much for your cooperation.

Parts Manager Check	Service Manager Check	Parts Manager File

YAMAHA MOTOR CO.,LTD
2500 Shingai Iwata Shizuoka 438-8501.Japan
Technical Publication Dept.

YAMAHA GENUINE Parts & Accessories

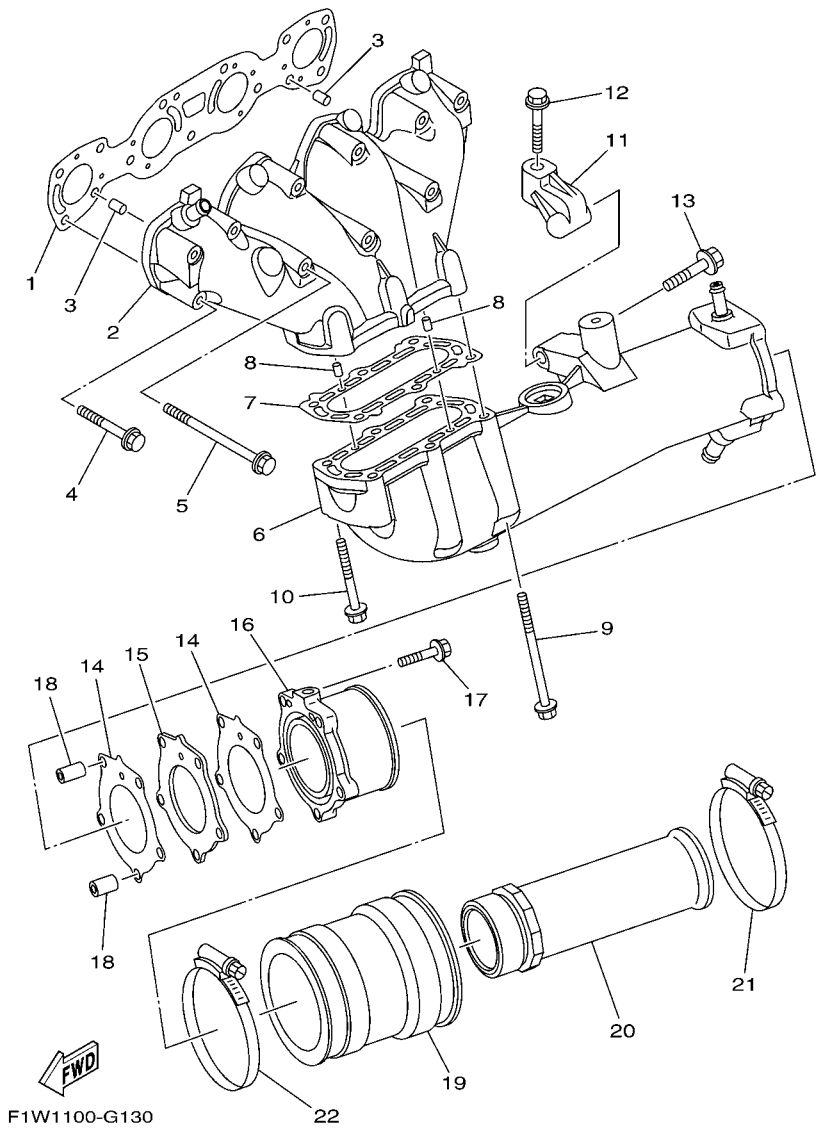

FIG. 13 EXHAUST 1

REF. NO.	PART NO.	DESCRIPTION	CAN	EUR	GENE			REMARKS
1	6S5–14613–00	GASKET, EXHAUST PIPE	1	1	1			
2	6S5–14711–00–94	MUFFLER 1	1	1	1			
3	93608–16M16	PIN, DOWEL	2	2	2			
4	90119–08034	BOLT, WITH WASHER	8	8	8			
5	90119–08097	BOLT, WITH WASHER	3	3	3			
6	6S5–14721–00–94	MUFFLER 2	1	1	1			Go to P/N : PE0-WV-100008
7	6S5–14739–00	GASKET, MUFFLER DAMPER 1	1	1	1			
8	93606–12019	PIN, DOWEL	2	2	2			
9	90119–08097	BOLT, WITH WASHER	4	4	4			
10	90119–08034	BOLT, WITH WASHER	2	2	2			
11	6S5–14771–00–94	STAY, MUFFLER 1	1	1	1			
12	90119–08096	BOLT, WITH WASHER	1	1	1			
13	90119–10029	BOLT, WITH WASHER	1	1	1			
14	6S5–14749–00	GASKET, MUFFLER DAMPER 2	2	2	2			
15	6S5–1469W–00	PLATE, SILENCER 6	1	1	1			Go to P/N : PE0-WV-100008
16	6S5–14784–00–94	PIPE, TAIL	1	1	1			
17	95024–08035	BOLT, FLG.(SMALL HEAD)	5	5	5			
18	99590–10114	PIN, DOWEL	2	2	2			Go to P/N : PE0-WV-100008
19	6S5–14752–00	PIPE, OUTLET	1	1	1			
20	6S5–1475A–00	PIPE 1	1	1	1			
21	90450–99M06	HOSE CLAMP ASSY	1	1	1			
22	90450–90M10	HOSE CLAMP ASSY	1	1	1			

PARTS NEWS

YAMAHA
YAMAHA MOTOR CO., LTD.
2500 SHINGAI IWATA SHIZUOKA JAPAN

Date:May 12, 2010

News No.PE0-WV-100008

Signature: F. Takahashi

Cause ☑ Revision Notice ☐ Correction ☐ Sales Unit Change ☐ Others

Model	See the"List of Models and CATALOGUE No's below."
Subject	PARTS CATALOGUE CORRECTIONS
CATALOGUE NO.	See the"List of Models and CATALOGUE No's below."

Time of YPEC Revision Text, Illustration --> May/31/2010 PDF Replace --> May/31/2010

(YPEC = Yamaha Parts Electrical Catalogue = Website parts catalogue)

7. LIST of Models and CATALOGUE No's.

The applicable MODELS, MODEL CODES, and CATALOGUE No's are as follows.

CATALOGUE No.	Model	Mode code	DESTINATION	Applicable Serial No.
1JF1W-110E1	FX1800A-J	F1WD	USA/CAN	Not applicable
1JF1W-100E1		F1WE	OCE	F1W-820201 and follwing
1JF1W-300E1		F1WF	EUR	F1W-820501 and follwing
1JF2R-110E1	GX1800-J	F2R4	USA/CAN	F2R-804101 and follwing
1JF2R-100E1		F2R5	OCE	F2R-804300 and follwing
1JF2R-300E1		F2R6	EUR	Not applicable
1JF2C-110E1	GX1800A-J	F2C7	USA/CAN	F2C-804801 and follwing
1JF2C-100E1		F2C8	OCE	F2C-804901 and follwing
1JF2C-300E1		F2C9	EUR	Not applicable

8. LIST CORRECTION

FIG.13 EXHAUST 1 SECTION

Ref.No.	OLD PART No.	NEW PART No.	PART NAME	Q'TY	INTERCHANGE ABILITY	REMARKS
6	6S5-14721-00-94	**6BH-14721-00-94**	MUFFLER 2	1	○ B	**Revision**
14	6S5-14749-00	**6BH-14749-00**	GASKET, MUFFLER DAMPER 2	2-->**1**	○ B	**Revision**
15	6S5-1469W-00	**-**	PLATE, SILENCER 6	1		**Delete**
16	6S5-14784-00-94	**6BH-14784-01-94**	PIPE, TAIL	1	○ B	**Revision**
18	99590-10114	**-**	PIN, DOWEL	2		**Delete**

FIG.14 EXHAUST 2 SECTION

46	6S5-1244G-00	**90445-16013**	HOSE	1	○ B	**Revision**

* The parts marked with ○-○ indicates interchangeability with a set.

9. ILLUSTRATION CORRECTION

Previous type

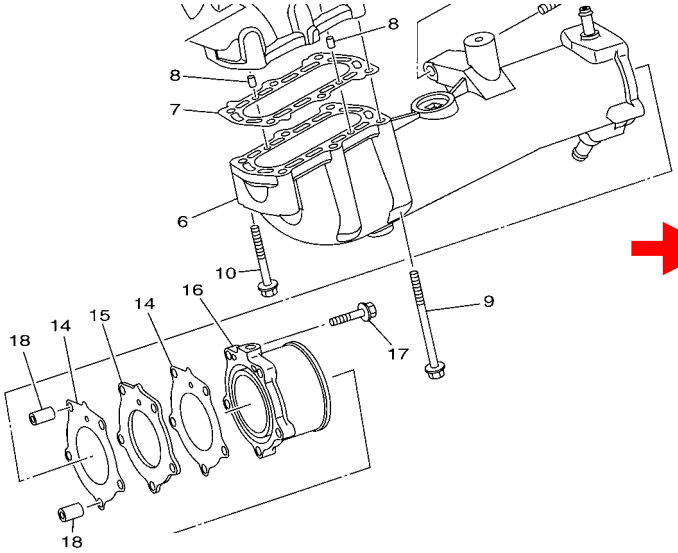

NEW type

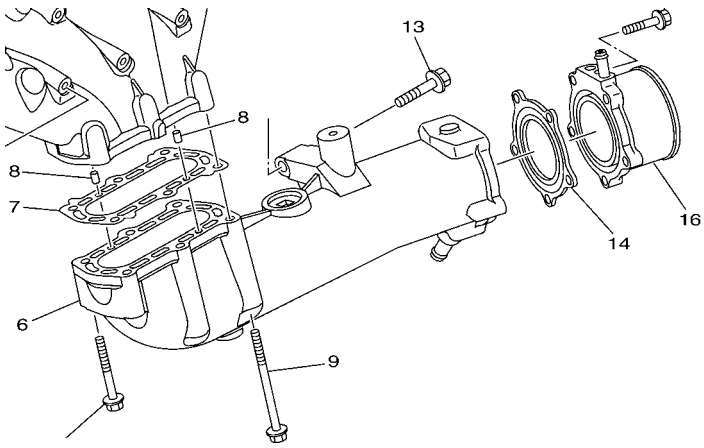

Thank you very much for your cooperation.

Parts Manager Check	Service Manager Check	Parts Manager File

YAMAHA MOTOR CO.,LTD
2500 Shingai Iwata Shizuoka 438-8501.Japan
Technical Publication Dept.

YAMAHA GENUINE Parts & Accessories

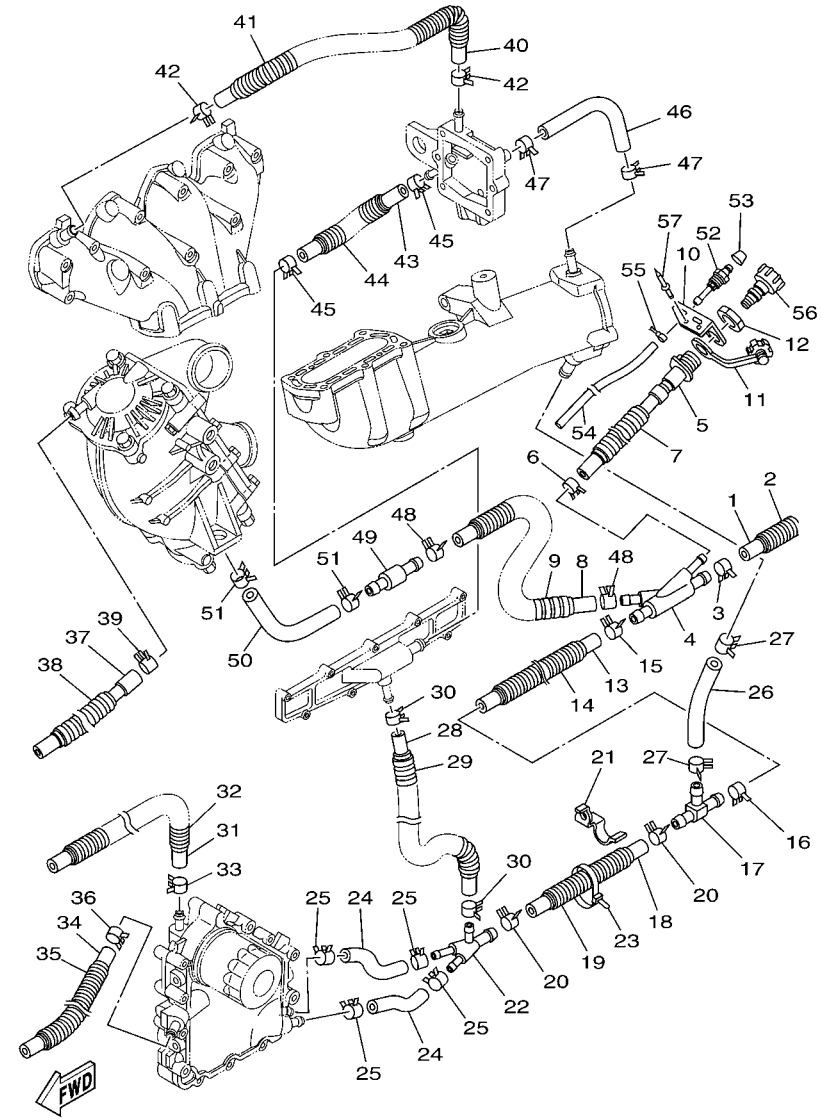

F1W1100-G140

FIG. 14 EXHAUST 2

REF. NO.	PART NO.	DESCRIPTION	CAN	EUR	GENE			REMARKS
1	90445–21806	HOSE (L250)	1	1	1			
2	90447–22801	TUBE (L200)	1	1	1			
3	90467–200A0	CLIP	1	1	1			
4	6S5–12581–00	JOINT, HOSE 1	1	1	1			
5	63M–12580–00	JOINT ASSY	1	1	1			
6	90467–150A0	CLIP	1	1	1			
7	90447–19801	TUBE(L485)	1	1	1			
8	90445–21807	HOSE(L970)	1	1	1			
9	90447–22802	TUBE(L850)	1	1	1			
10	6S5–12443–00	STAY	1	1	1			
11	682–84385–01	CAP,1	1	1	1			
12	EU0–61652–00	NUT	1	1	1			
13	6S5–1243E–00	HOSE 2	1	1	1			
14	90447–22011	TUBE (L170)	1	1	1			
15	90467–200A0	CLIP	1	1	1			
16	90467–200A0	CLIP	1	1	1			
17	6S5–12584–00	JOINT, HOSE 3	1	1	1			
18	6S5–1243F–00	HOSE,3	1	1	1			
19	90447–22013	TUBE(L140)	1	1	1			
20	90467–200A0	CLIP	2	2	2			
21	90462–10044	CLAMP	1	1	1			
22	6S5–12582–00	JOINT, HOSE 2	1	1	1			
23	90464–35132	CLAMP	1	1	1			
24	6S5–1244J–00	HOSE 6	2	2	2			
25	90467–160A0	CLIP	4	4	4			
26	6S5–12589–00	HOSE 6	1	1	1			
27	90467–200A0	CLIP	2	2	2			

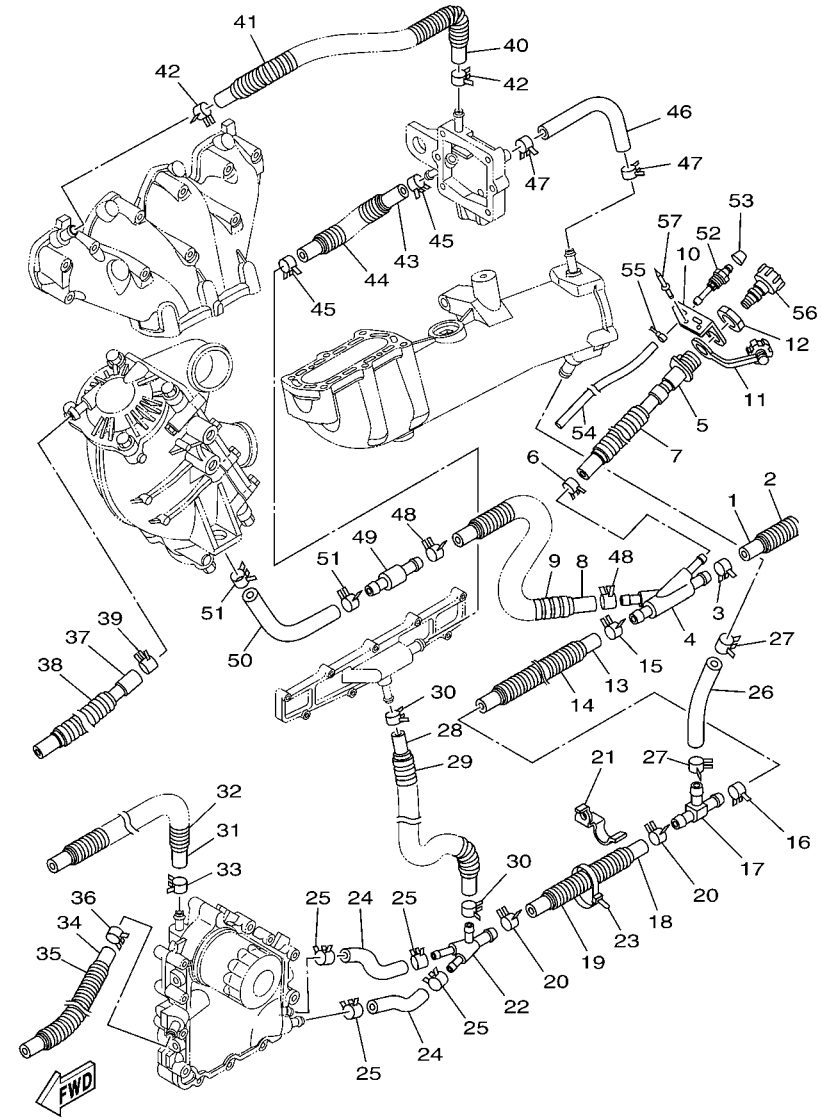

F1W1100-G140

FIG. 14 EXHAUST 2

REF. NO.	PART NO.	DESCRIPTION	CAN	EUR	GENE			REMARKS
28	6S5–1244H–00	HOSE 5	1	1	1			
29	90447–19011	TUBE(L150)	1	1	1			
30	90467–150A1	CLIP	2	2	2			
31	6S5–12588–00	HOSE 5	1	1	1			
32	90447–19006	HOSE, WITH SPRING (L=630)	1	1	1			
33	90467–160A0	CLIP	1	1	1			
34	6S5–14987–00	HOSE	1	1	1			
35	90447–19006	HOSE, WITH SPRING (L=630)	1	1	1			
36	90467–160A0	CLIP	1	1	1			
37	6S5–12552–00	HOSE 8	1	1	1			
38	90446–24M89	HOSE (L420)	1	1	1			
39	90467–170A0	CLIP	1	1	1			
40	6S5–12577–00	HOSE 2	1	1	1			
41	90446–27M55	TUBE (L400)	1	1	1			
42	90467–160A0	CLIP	2	2	2			
43	6S5–12579–00	HOSE 4	1	1	1			
44	90447–19011	TUBE(L150)	1	1	1			
45	90467–160A0	CLIP	2	2	2			
46	90445–16013	HOSE	1	1	1			
47	90467–160A0	CLIP	2	2	2			
48	90467–200A0	CLIP	2	2	2			
49	6S5–12594–00	JOINT, HOSE 4	1	1	1			
50	6S5–12576–00	HOSE 1	1	1	1			
51	90467–200A0	CLIP	2	2	2			
52	61L–5169A–00	NIPPLE, GREASE	1	1	1			
53	663–45119–00	CAP, GREASE NIPPLE	1	1	1			
54	90445–09M21	HOSE (L445)	1	1	1			

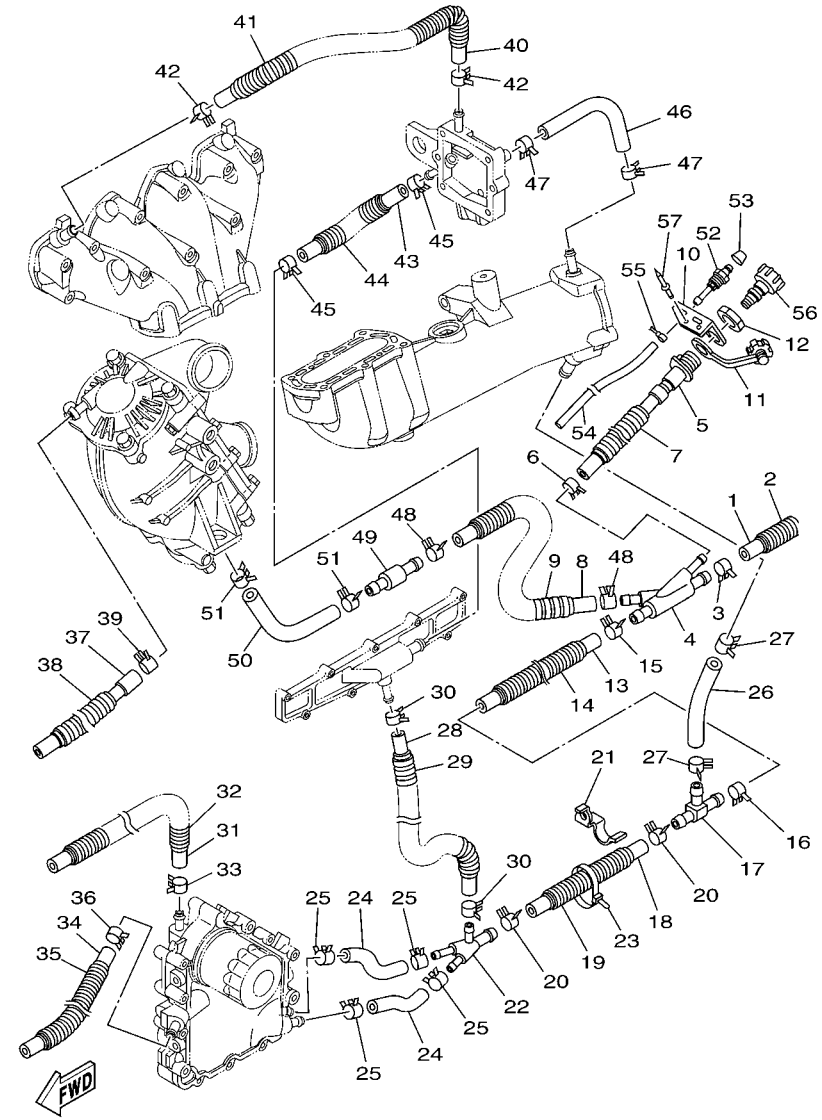

F1W1100-G140

FIG. 14 EXHAUST 2

REF. NO.	PART NO.	DESCRIPTION	CAN	EUR	GENE			REMARKS
55	90465–11829	CLAMP	1	1	1			
56	67X–E2590–10	CONDUCTION ASSY	1	1	1			
57	90267–489U1	RIVET,BLIND	2	2	2			

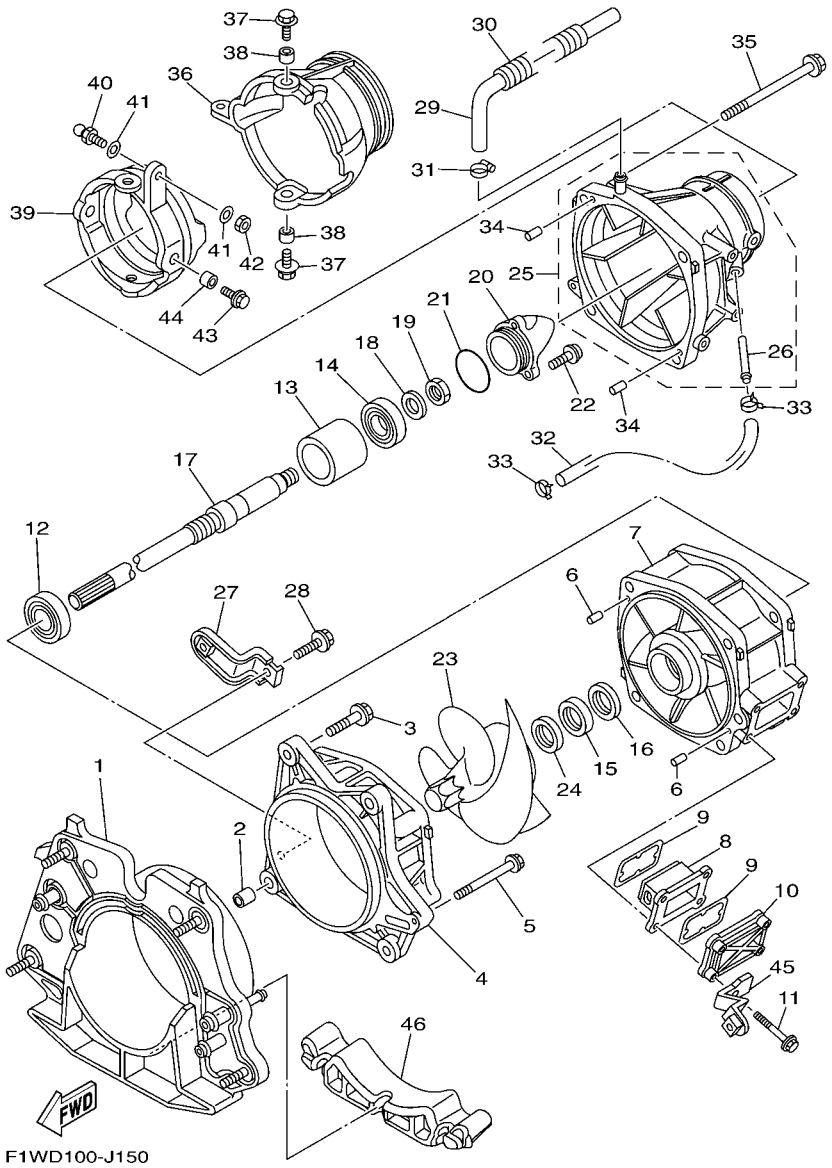

FIG. 15 JET UNIT 1

REF. NO.	PART NO.	DESCRIPTION	CAN	EUR	GENE			REMARKS
1	6S5–G5831–02	PLATE, TRANSOM	1	1	1			
2	99590–14016	PIN, DOWEL	2	2	2			
3	90119–10810	BOLT, WITH WASHER	4	4	4			
4	66V–51312–01–94	HOUSING, IMPELLER	1	1	1			
5	90119–06893	BOLT, WITH WASHER	1	1	1			
6	93606–12019	PIN, DOWEL	2	2	2			
7	6S5–51315–00–94	DUCT, IMPELLER	1	1	1			
8	66V–46882–00	FILTER	1	1	1			
9	66V–42414–00	O-RING	2	2	2			
10	66V–45214–00–94	COVER, WATER INLET 1	1	1	1			
11	90119–06897	BOLT, WITH WASHER	4	4	4			
12	93306–20654	BEARING	1	1	1			
13	6S5–45538–00	SPACER 1	1	1	1			
14	93306–30582	BEARING	1	1	1			
15	93102–31009	OIL SEAL	1	1	1			
16	93102–31004	OIL SEAL	1	1	1			
17	6S5–45511–00	SHAFT, DRIVE	1	1	1			
18	9290P–20600	WASHER	1	1	1			
19	90170–20802	NUT	1	1	1			
20	6S5–51326–00–94	CAP	1	1	1			
21	6S5–5111K–00	O-RING 1	1	1	1			
22	90110–06822	BOLT, HEXAGON SOCKET HEAD	3	3	3			
23	6S5–R1321–03	IMPELLER	1	1	1			
24	6S5–R1348–00	SPACER	1	1	1			
25	6S5–51318–00–94	NOZZLE	1	1	1			
26	63M–51334–00	.NIPPLE,HOSE	1	1	1			
27	6B6–R1343–00	BRACKET	1	1	1			

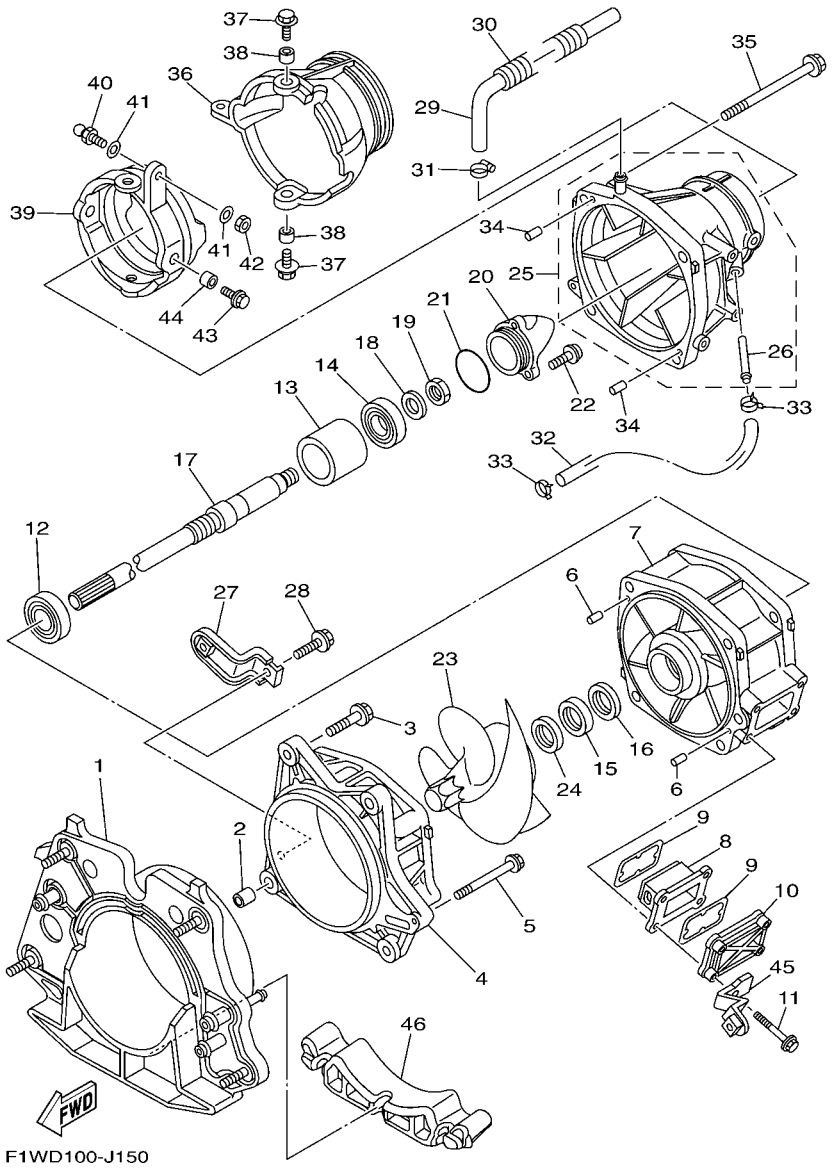

FIG. 15 JET UNIT 1

REF. NO.	PART NO.	DESCRIPTION	CAN	EUR	GENE			REMARKS
28	90119–069UB	BOLT, WITH WASHER	1	1	1			
29	90445–16806	HOSE (L310)	1	1	1			
30	90447–19015	TUBE (L230)	1	1	1			
31	90601–118UF	BAND, HOSE 18	1	1	1			
32	90445–14804	HOSE (L330)	1	1	1			
33	90467–14803	CLIP	2	2	2			
34	93606–12019	PIN, DOWEL	2	2	2			
35	90119–10806	BOLT, WITH WASHER	4	4	4			
36	6S5–R1313–01	NOZZLE, DEFLECTOR	1	1	1			
37	90119–089UE	BOLT, WITH WASHER	2	2	2			
38	90387–08M06	COLLAR	2	2	2			
39	60T–51190–00–94	RING,TRIM	1	1	1			
40	GH3–U146E–00	STUD, JOINT BALL	1	1	1			
41	90201–068M4	WASHER, PLATE	2	2	2			
42	9538R–06700	NUT	1	1	1			
43	90119–089UE	BOLT, WITH WASHER	2	2	2			
44	90387–08M06	COLLAR	2	2	2			
45	6B6–51342–00	BRACKET 2	1	1	1			
46	F1W–U72C0–01	SPACER	1	1	1			

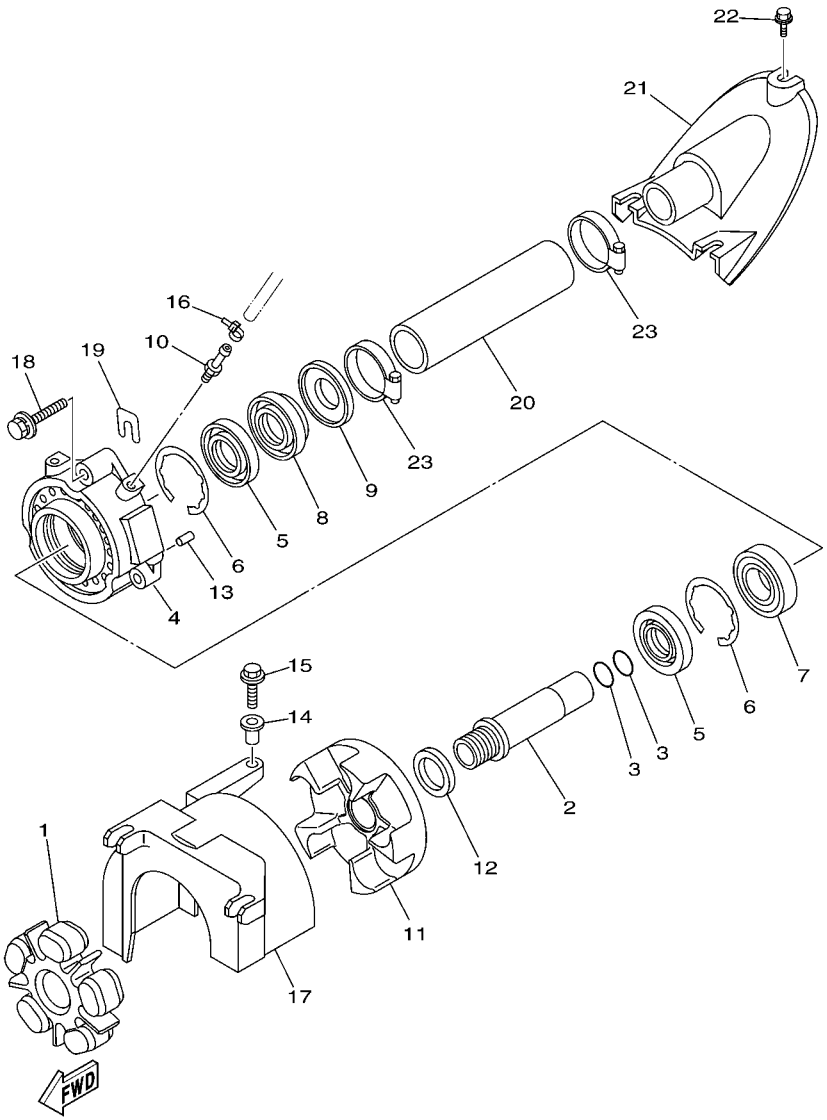

F1W1100-G160

FIG. 16 JET UNIT 2

REF. NO.	PART NO.	DESCRIPTION	CAN	EUR	GENE			REMARKS
1	6S5–4581J–01	RUBBER SHAFT COUPLING	1	1	1			
2	6S5–51323–00	SHAFT, COUPLER	1	1	1			
3	93210–22MF1	O-RING	2	2	2			
4	6S5–45332–00–94	HOUSING, BEARING	1	1	1			
5	93102–29008	OIL SEAL	2	2	2			
6	93450–66156	CIRCLIP	2	2	2			
7	93306–20655	BEARING	1	1	1			
8	93102–29009	OIL SEAL	1	1	1			
9	6S5–45613–10	WASHER, THRUST	1	1	1			
10	61L–45378–00	NIPPLE, HOSE	1	1	1			
11	6S5–45593–00–94	FLANGE, COUPLING 1	1	1	1			
12	6S5–12289–00	WASHER	1	1	1			
13	93606–12019	PIN, DOWEL	2	2	2			
14	90387–06M60	COLLAR	1	1	1			
15	90119–06891	BOLT, WITH WASHER	1	1	1			
16	90465–11829	CLAMP	1	1	1			
17	6S5–R1381–01	COVER	1	1	1			
18	90119–089UU	BOLT, WITH WASHER	3	3	3			
19	GD0–U7249–00–05	SHIM (T=0.5)	2	2	2			UR
20	F2C–U883B–00	PIPE, 1	1	1	1			
21	F1W–U883E–00	JOINT, PIPE	1	1	1			
22	90109–06832	BOLT	3	3	3			
23	90601–152U3	BAND, HOSE 52	2	2	2			

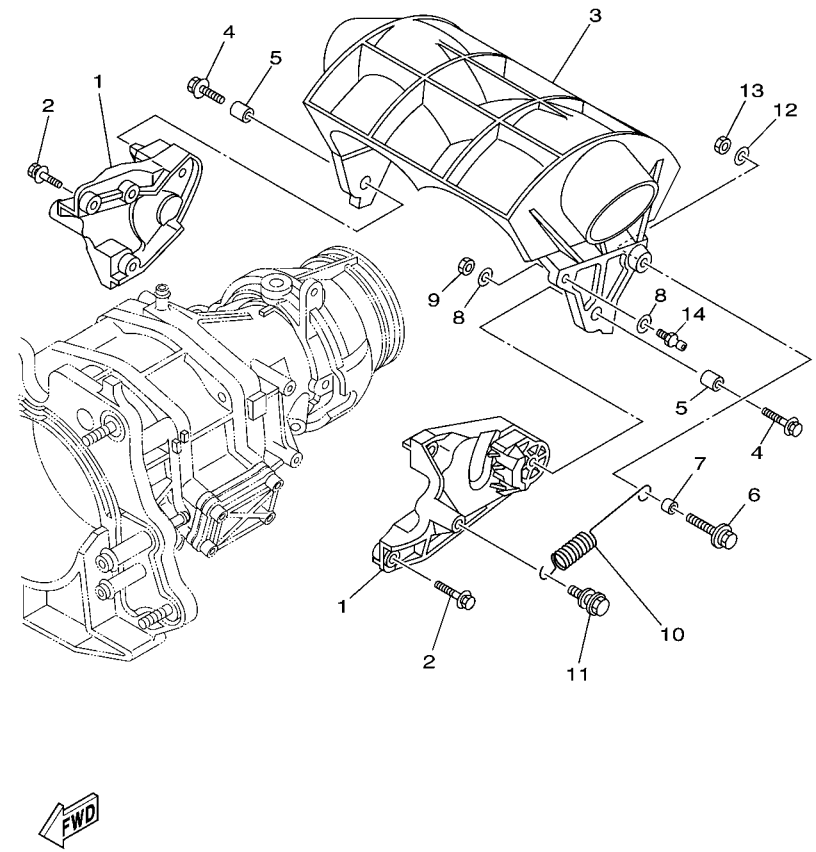

F1W1100-G170

FIG. 17 JET UNIT 3

REF. NO.	PART NO.	DESCRIPTION	CAN	EUR	GENE			REMARKS
1	6S5–51341–00–94	BRACKET 1	2	2	2			
2	90119–069UD	BOLT, WITH WASHER	6	6	6			
3	6S5–R1314–00	GATE, REVERSE	1	1	1			
4	90119–089UF	BOLT, WITH WASHER	2	2	2			
5	90387–08M30	COLLAR	2	2	2			
6	90119–069UX	BOLT, WITH WASHER	1	1	1			
7	90387–06M30	COLLAR	1	1	1			
8	90201–06801	WASHER, PLATE	1	1	1			
9	9538R–06600	NUT	1	1	1			
10	6S5–52358–00	SPRING, RETAINER	1	1	1			
11	6S5–45241–00	BOLT, FLANGE W/WASHER	1	1	1			
12	90201–06801	WASHER, PLATE	2	2	2			
13	9538R–06600	NUT	1	1	1			
14	EU0–U1461–02	STUD, JOINT BALL	1	1	1			

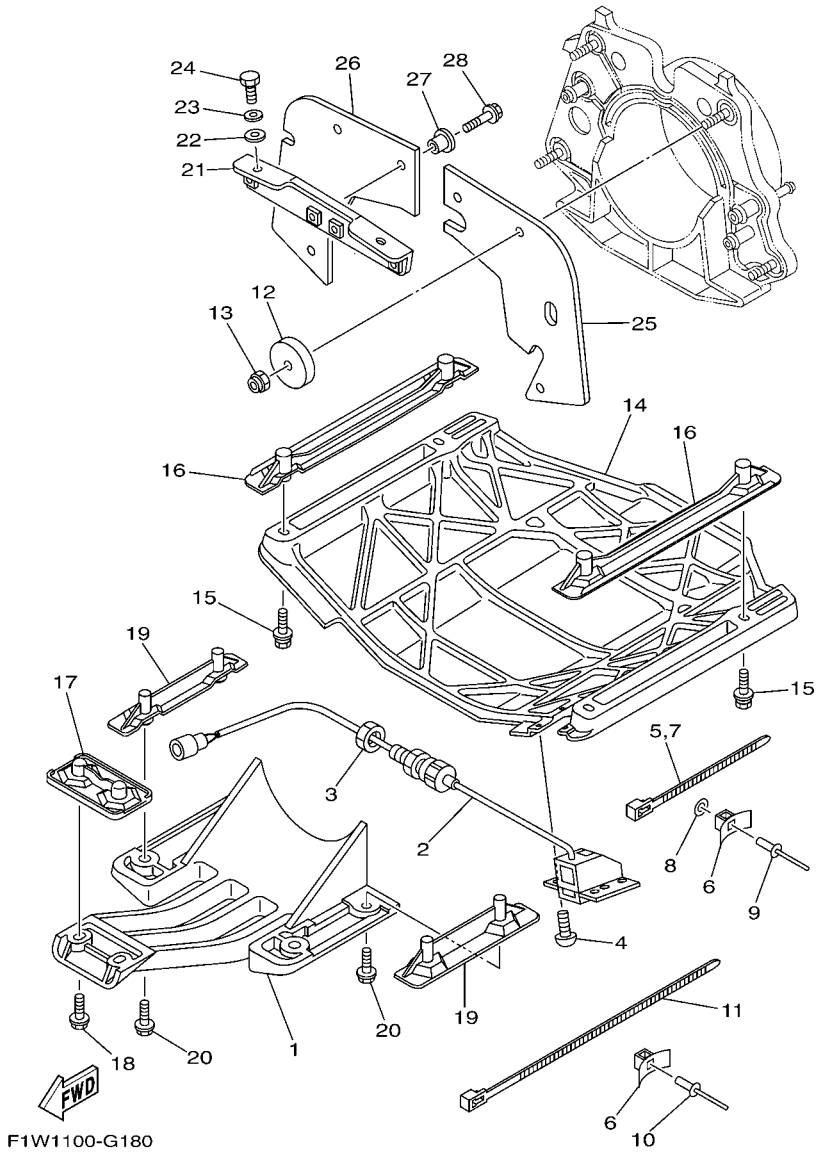

FIG. 18 JET UNIT 4

REF. NO.	PART NO.	DESCRIPTION	CAN	EUR	GENE			REMARKS
1	6S5–R1333–02	SCREEN, INTAKE	1	1	1			
2	F1X–U8K31–02	SENSOR SPEED	1	1	1			
3	F2C–U151S–00	NUT	1	1	1			
4	90150–05807	SCREW, ROUND HEAD	4	4	4			
5	90464–32801	CLAMP	1	1	1			
6	F1W–U828M–00	BASE, CLAMP	8	8	8			
7	90464–32801	CLAMP	7	7	7			
8	9299R–05200	WASHER	2	2	2			
9	90267–48802	RIVET, BLIND	6	6	6			
10	90267–489U6	RIVET, BLIND	2	2	2			
11	90464–99801	CLAMP	1	1	1			
12	F1S–U725E–01	WASHER	4	4	4			
13	9572R–10300	NUT, NYLON	4	4	4			
14	F1W–6273B–02	PLATE 2	1	1	1			
15	90119–08823	BOLT, WITH WASHER	4	4	4			
16	F1B–U8572–01	BRACKET 2	2	2	2			
17	F1K–U8577–01	BRACKET, 3	1	1	1			
18	90119–06896	BOLT, WITH WASHER	2	2	2			
19	F1G–U8571–01	BRACKET 1	2	2	2			
20	90119–08823	BOLT, WITH WASHER	4	4	4			
21	F1B–67557–00	BRACKET	1	1	1			
22	90430–12002	GASKET	2	2	2			
23	92990–12200	WASHER, PLAIN	2	2	2			
24	90109–08041	BOLT	2	2	2			
25	F1X–U757E–00	PLATE, RUBBER 1	1	1	1			
26	F1X–U757F–00	PLATE, RUBBER 2	1	1	1			
27	90387–06080	COLLAR	6	6	6			

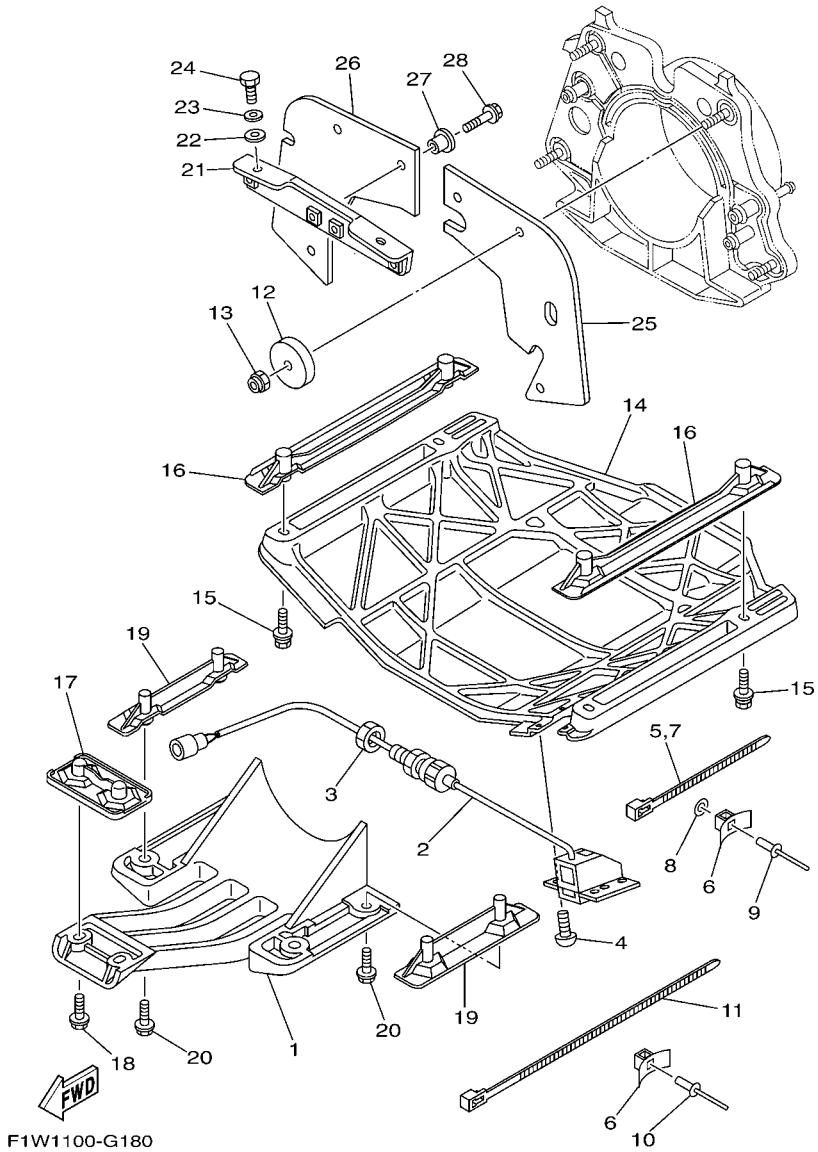

FIG. 18 JET UNIT 4

REF. NO.	PART NO.	DESCRIPTION	CAN	EUR	GENE			REMARKS
28	90119–06827	BOLT, WITH WASHER	6	6	6			

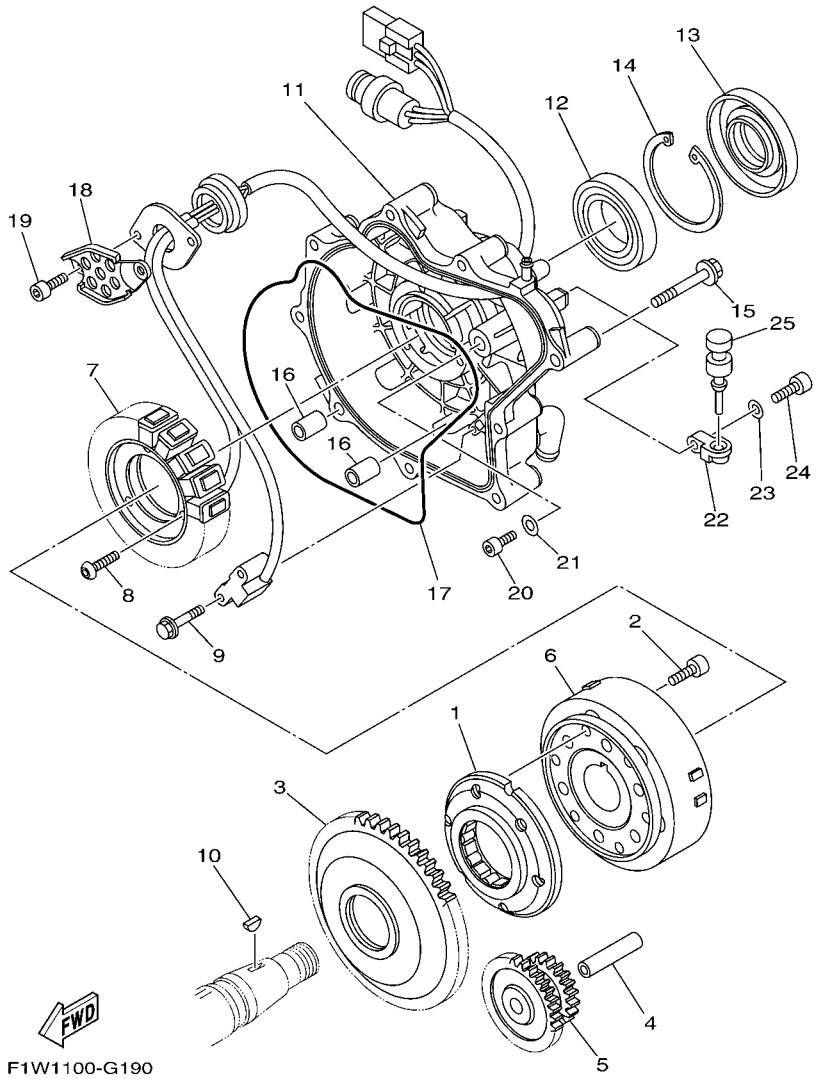

FIG. 19 GENERATOR

REF. NO.	PART NO.	DESCRIPTION	CAN	EUR	GENE			REMARKS
1	6S5–15590–00	STARTER ONE-WAY ASSY	1	1	1			
2	90110–08212	BOLT, HEXAGON SOCKET HEAD	6	6	6			
3	6S5–15515–00	GEAR 3	1	1	1			
4	6S5–15521–00	SHAFT 1	1	1	1			
5	6S5–15517–00	GEAR, IDLER 2	1	1	1			
6	6S5–81450–01	ROTOR ASSY	1	1	1			
7	6S5–81410–00	STATOR ASSY	1	1	1			
8	90149–06229	SCREW	3	3	3			
9	97513–05514	BOLT, WITH WASHER	2	2	2			
10	90280–03047	KEY, WOODRUFF	1	1	1			
11	6S5–81337–00–94	COVER, FLYWHEEL	1	1	1			
12	93306–00805	BEARING	1	1	1			
13	6S5–81167–10	OIL SEAL	1	1	1			
14	99009–72500	CIRCLIP	1	1	1			
15	95024–08050	BOLT, FLG.(SMALL HEAD)	9	9	9			
16	99530–10114	PIN, DOWEL	2	2	2			
17	6S5–81168–00	O-RING	1	1	1			
18	6S5–81328–00	CLAMP	1	1	1			
19	91317–06014	BOLT	2	2	2			
20	91317–05010	BOLT	1	1	1			
21	90201–052E8	WASHER, PLATE	1	1	1			
22	60E–51341–00–94	BRACKET 1	2	2	2			
23	92995–06600	WASHER	2	2	2			
24	91380–06020	BOLT	2	2	2			
25	90480–06M46	GROMMET	2	2	2			

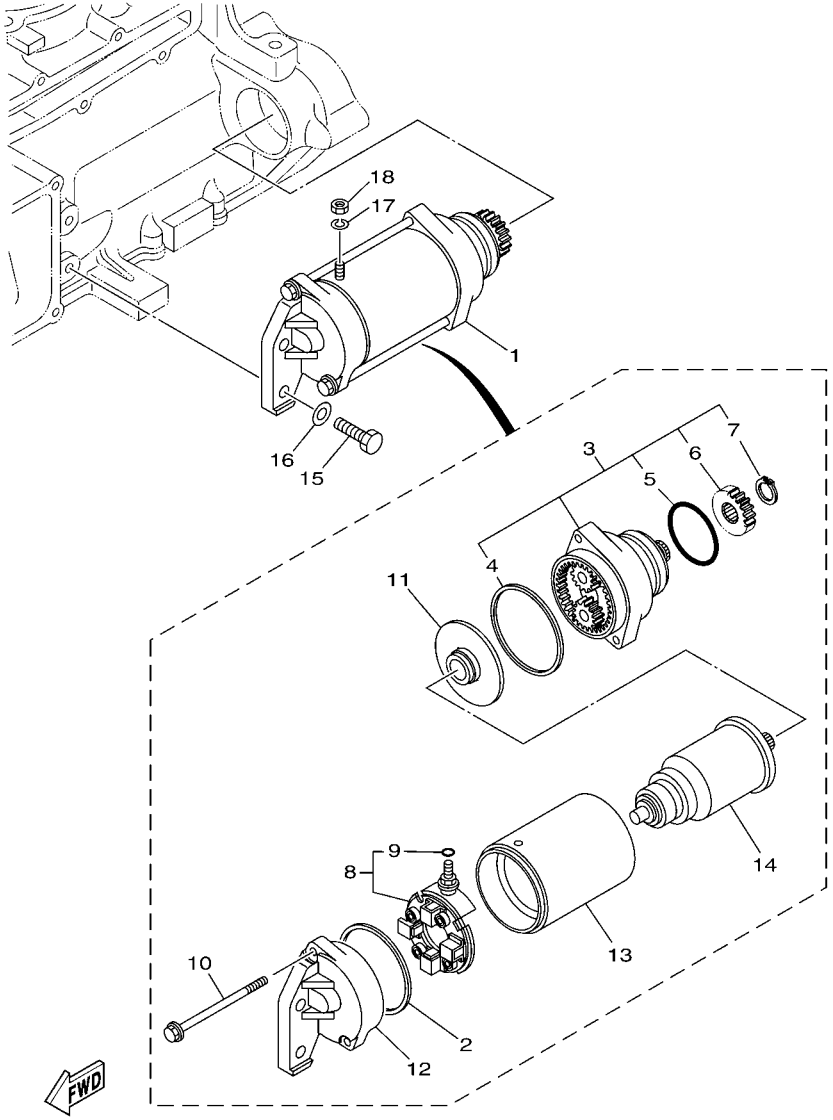

F1W1100-G200

FIG. 20 STARTING MOTOR

REF. NO.	PART NO.	DESCRIPTION	CAN	EUR	GENE			REMARKS
1	6S5–81800–00	STARTING MOTOR ASSY	1	1	1			
2	11H–81844–00	.GASKET	1	1	1			
3	6S5–81830–00	.FRONT BRACKET ASSY	1	1	1			
4	4G0–81844–00	..GASKET	1	1	1			
5	1J7–81847–60	..O-RING	1	1	1			
6	5EL–15511–00	..GEAR, STARTING MOTOR	1	1	1			
7	93410–12003	..CIRCLIP	1	1	1			
8	6S5–81840–00	.BRUSH HOLDER ASSY	1	1	1			
9	3TB–81847–00	..O-RING	1	1	1			
10	6S5–81826–00	.BOLT	2	2	2			
11	5EL–81845–00	.PLATE	1	1	1			
12	6S5–81820–00	.REAR BRACKET ASSY	1	1	1			
13	6S5–81810–00	.STATOR ASSY	1	1	1			
14	5A8–81850–10	.ARMATURE ASSY	1	1	1			
15	97013–08030	BOLT	2	2	2			
16	92903–08600	WASHER, PLATE	2	2	2			
17	92990–06100	WASHER, SPRING	1	1	1			
18	95380–06700	NUT	1	1	1			

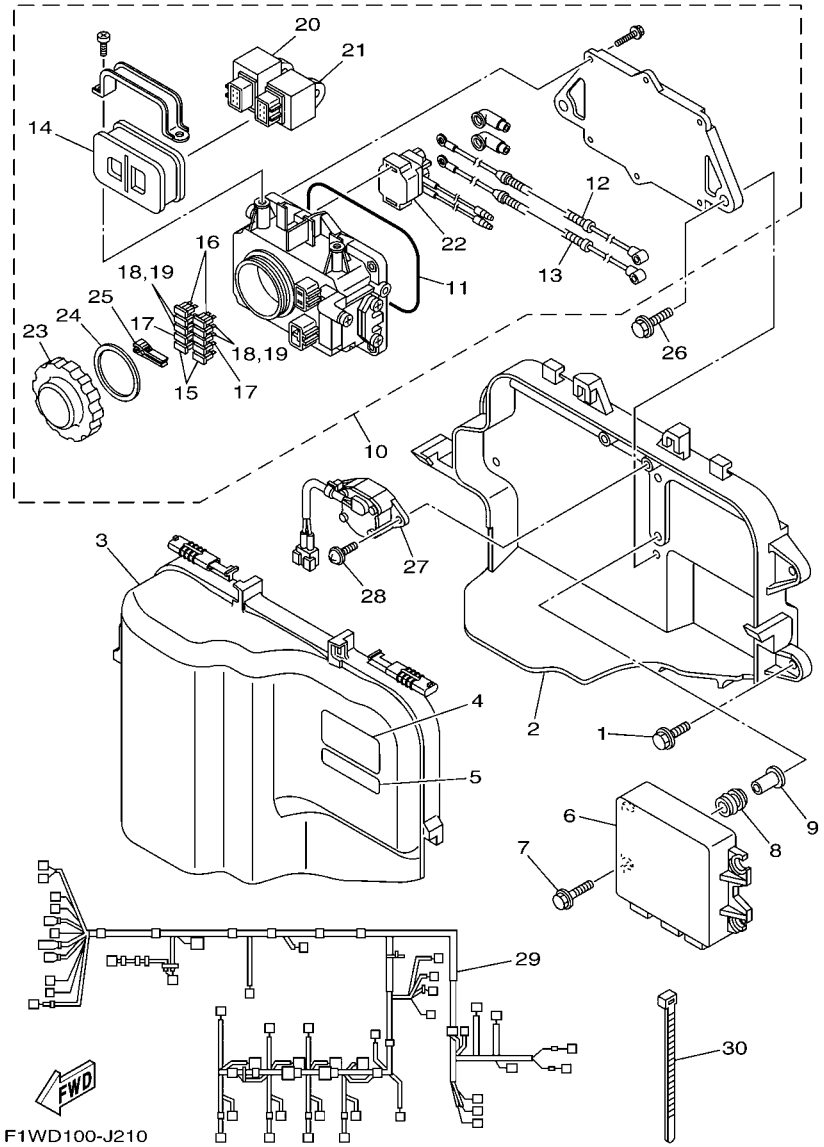

FIG. 21 ELECTRICAL 1

REF. NO.	PART NO.	DESCRIPTION	CAN	EUR	GENE			REMARKS
1	90119–089UT	BOLT, WITH WASHER	4	4	4			
2	6S5–81845–00	PLATE	1	1	1			Go to P/N : PE0-WV-100008
3	6S5–81942–00	COVER	1	1	1			
4	6B6–83623–00	MARK 3	1	1	1			
5	60E–83627–00	LABEL, CAUTION 7	1	1	1			
6	6S5–8591A–01	ENGINE CONTROL UNIT ASSY	1		1			FOR CAN, GENE
	6S5–8591A–11	ENGINE CONTROL UNIT ASSY		1				FOR EUR
7	90119–06M35	BOLT, WITH WASHER	4	4	4			
8	6A0–82317–00	DAMPER, IGNITION COIL	4	4	4			
9	90387–06119	COLLAR	4	4	4			
10	6S5–82170–00	FUSE BOX ASSY	1	1	1			Go to P/N : PE0-WV-100008
11	6D3–81921–00	.GASKET, TERMINAL	1	1	1			
12	6S5–82115–00	.WIRE, PLUS LEAD	1	1	1			
13	6S5–82117–00	.WIRE, LEAD	1	1	1			
14	6D3–82157–00	.DAMPER	1	1	1			
15	67F–82151–00	.FUSE (20A)	2	2	2			
16	67F–82151–10	.FUSE (30A)	2	2	2			
17	67F–82151–30	.FUSE (3A)	2	2	2			
18	67F–82151–40	.FUSE (10A)	2	2	2			
19	67F–82151–40	.FUSE (10A)	2	2	2			
20	60E–81950–00	.RELAY ASSY	1	1	1			
21	68V–81950–00	.RELAY ASSY	1	1	1			
22	6B6–81940–00	.STARTER RELAY ASSY	1	1	1			
23	66V–8132W–00	.CAP	1	1	1			
24	66V–81844–00	.GASKET	1	1	1			
25	67F–2812A–00	.PULLER, FUSE	1	1	1			
26	90119–08123	BOLT, WITH WASHER	2	2	2			Go to P/N : PE0-WV-100008

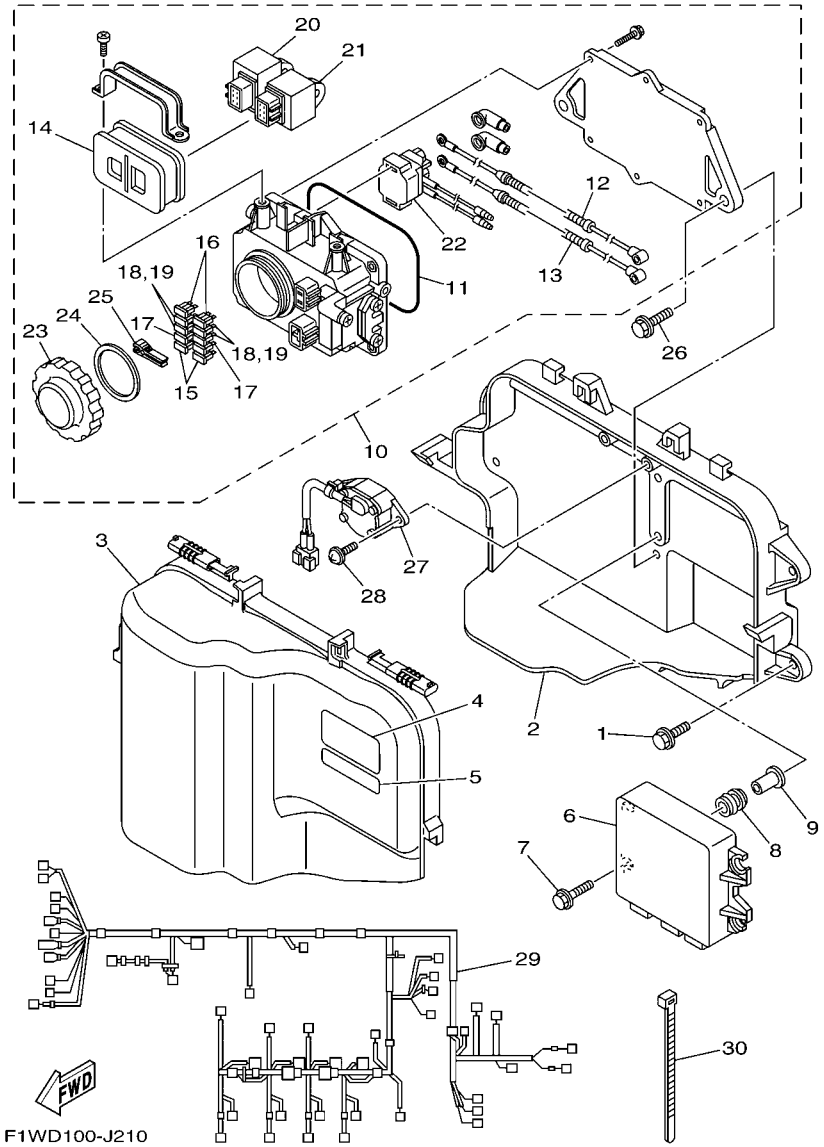

FIG. 21 ELECTRICAL 1

REF. NO.	PART NO.	DESCRIPTION	CAN	EUR	GENE			REMARKS
27	6S5–8259E–00	SWITCH ASSY	1	1	1			
28	97780–60520	SCREW, TAPPING	2	2	2			
29	6S5–8259L–02	WIRE HARNESS ASSY 1	1	1	1			
30	90465–14M66	CLAMP	1	1	1			

PARTS NEWS

YAMAHA
YAMAHA MOTOR CO., LTD.
2500 SHINGAI IWATA SHIZUOKA JAPAN

Date:May 12, 2010

News No.PE0-WV-100008

Signature: F. Takahashi

Cause ☑ Revision Notice ☐ Correction ☐ Sales Unit Change ☐ Others

Model	See the"List of Models and CATALOGUE No's below."
Subject	PARTS CATALOGUE CORRECTIONS
CATALOGUE NO.	See the"List of Models and CATALOGUE No's below."

Time of YPEC Revision Text, Illustration --> May/31/2010 PDF Replace --> May/31/2010

(YPEC = Yamaha Parts Electrical Catalogue = Website parts catalogue)

10. LIST of Models and CATALOGUE No's.

The applicable MODELS, MODEL CODES, and CATALOGUE No's are as follows.

CATALOGUE No.	Model	Mode code	DESTINATION	Applicable Serial No.
1JF1W-110E1	FX1800A-J	F1WD	USA/CAN	Not applicable
1JF1W-100E1		F1WE	OCE	F1W-820201 and follwing
1JF1W-300E1		F1WF	EUR	F1W-820501 and follwing

11. LIST CORRECTION

FIG.21 ELECTRICAL 1 SECTION

Ref.No.	OLD PART No.	NEW PART No.	PART NAME	Q'TY	INTERCHANGE ABILITY	REMARKS
2	6S5-81845-00	**6BH-81845-00**	PLATE	1	B	**Revision**
10	6S5-82170-00	**6BH-82170-00**	FUSE BOX ASSY	1	B	**Revision**
11	6D3-81921-00	**-**	.O-RING	1		**Delete**
26	90119-08123	**90119-06091**	BOLT, WITH WASHER	2-->**6**	B	**Revision**
31	-	**6BH-81847-00**	O-RING	1	B	**Add**

* The parts marked with indicates interchangeability with a set.

12. ILLUSTRATION CORRECTION

Previous type

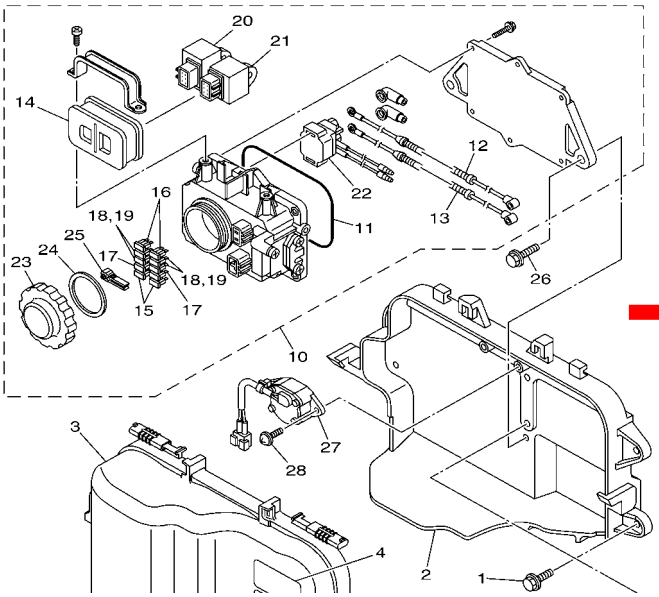

NEW type

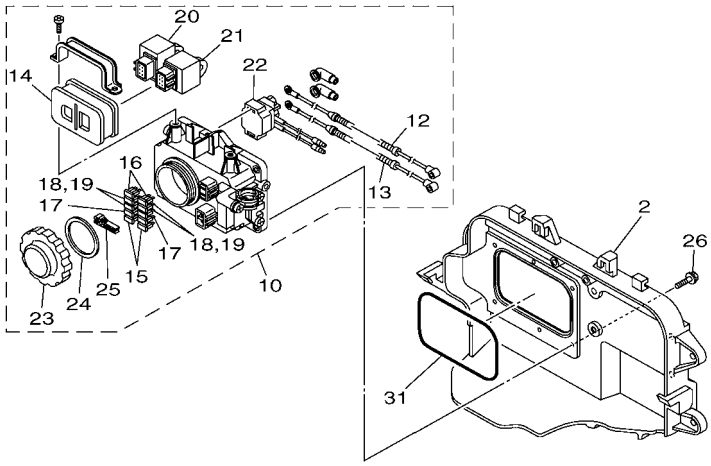

Thank you very much for your cooperation.

Parts Manager Check	Service Manager Check	Parts Manager File	YAMAHA MOTOR CO.,LTD 2500 Shingai Iwata Shizuoka 438-8501.Japan Technical Publication Dept.

YAMAHA GENUINE Parts & Accessories

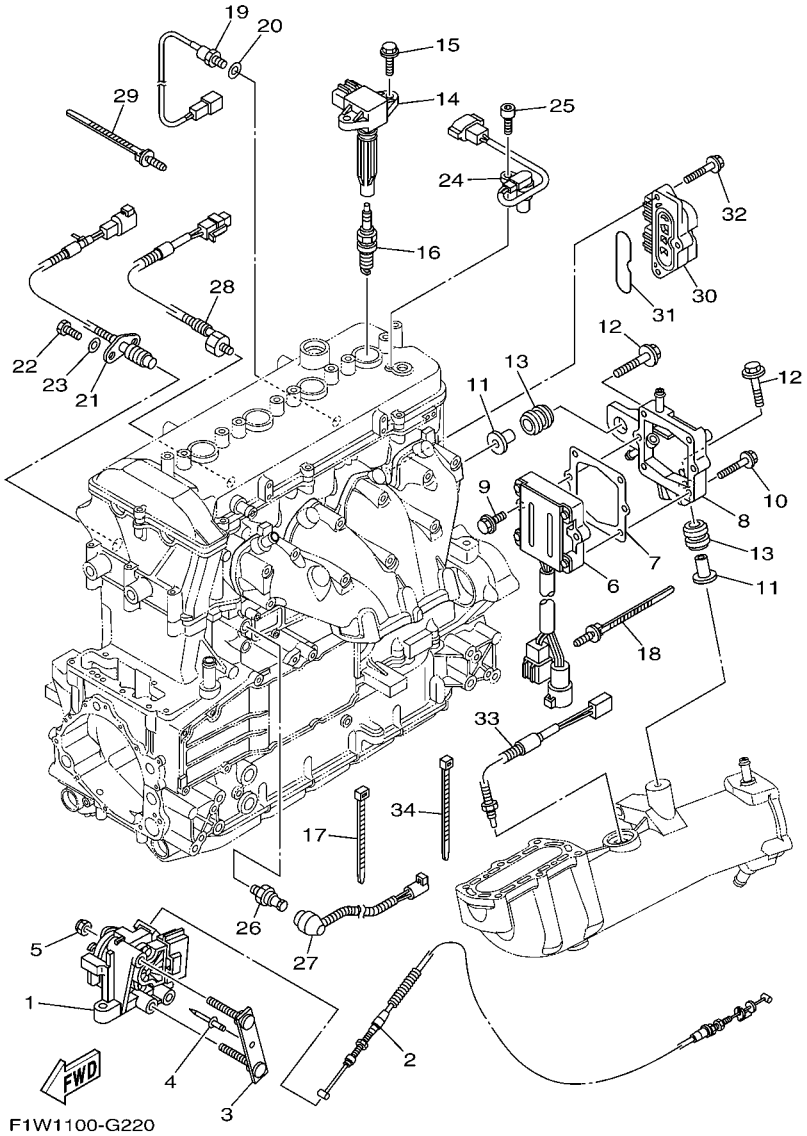

FIG. 22 ELECTRICAL 2

REF. NO.	PART NO.	DESCRIPTION	CAN	EUR	GENE			REMARKS
1	6D3–14305–21	ACCEL. POSITON SENSOR ASSY	1	1	1			
2	6S5–26311–10	CABLE, THROTTLE 1	1	1	1			
3	F1W–U7254–00	BRACKET, THROTTLE	1	1	1			
4	90267–489U1	RIVET,BLIND	1	1	1			
5	95780–08300	NUT, FLANGE	2	2	2			
6	6S5–81960–00	RECTIFIER & REGULATOR ASSY	1	1	1			
7	6S5–81975–00	PLATE, RECTIFIER FITTING	1	1	1			
8	6S5–81972–01–94	COVER, RECTIFIER	1	1	1			
9	90119–06MA3	BOLT, WITH WASHER	2	2	2			
10	90119–06048	BOLT, WITH WASHER	4	4	4			
11	6D3–14495–00	COLLAR	2	2	2			
12	90119–08M22	BOLT, WITH WASHER	2	2	2			
13	90480–22M15	GROMMET	2	2	2			
14	6S5–82310–00	IGNITION COIL ASSY	4	4	4			
15	90105–06903	BOLT, FLANGE	8	8	8			
16	94702–00427	PLUG, SPARK (NGK LFR6A)	4	4	4			
17	90465–13M18	CLAMP	5	5	5			
18	90464–31001	CLAMP	2	2	2			
19	61A–85790–00	THERMOSENSOR ASSY	1	1	1			
20	92990–10600	WASHER, PLATE	1	1	1			
21	60E–82560–01	THERMO SWITCH ASSY	1	1	1			
22	97095–06016	BOLT	2	2	2			
23	92995–06600	WASHER	2	2	2			
24	6D3–85896–00	SENSOR, CAM POSITION	1	1	1			
25	91380–06016	BOLT	1	1	1			
26	68V–82504–00	OIL PRESSURE SWITCH ASSY	1	1	1			
27	6S5–81315–00	LEAD WIRE ASSY	1	1	1			

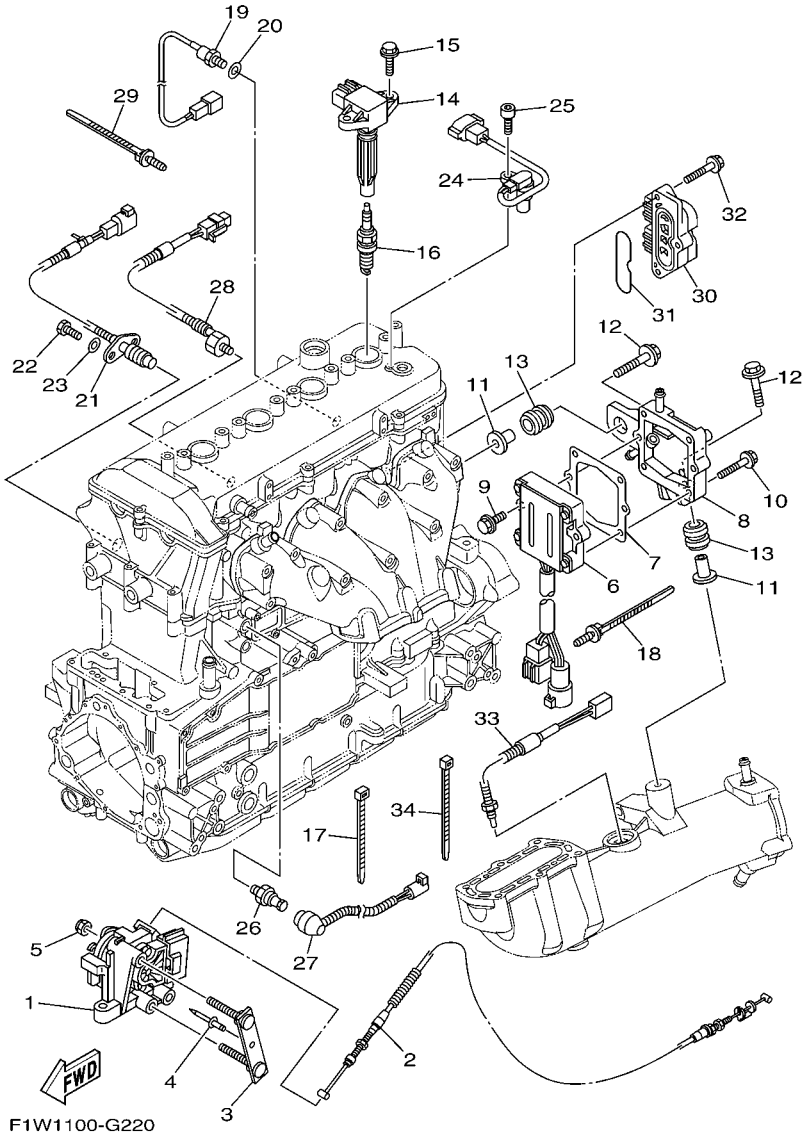

FIG. 22 ELECTRICAL 2

REF. NO.	PART NO.	DESCRIPTION	CAN	EUR	GENE			REMARKS
28	6P2–85780–00	SENSOR, KNOCK	1	1	1			
29	90464–31001	CLAMP	1	1	1			
30	6D3–8273J–01	EARTH PLATE COMP.	1	1	1			
31	93210–60ME8	O-RING	1	1	1			
32	90119–06048	BOLT, WITH WASHER	3	3	3			
33	6AA–85790–00	THERMOSENSOR ASSY	1	1	1			
34	90464–31001	CLAMP	1	1	1			

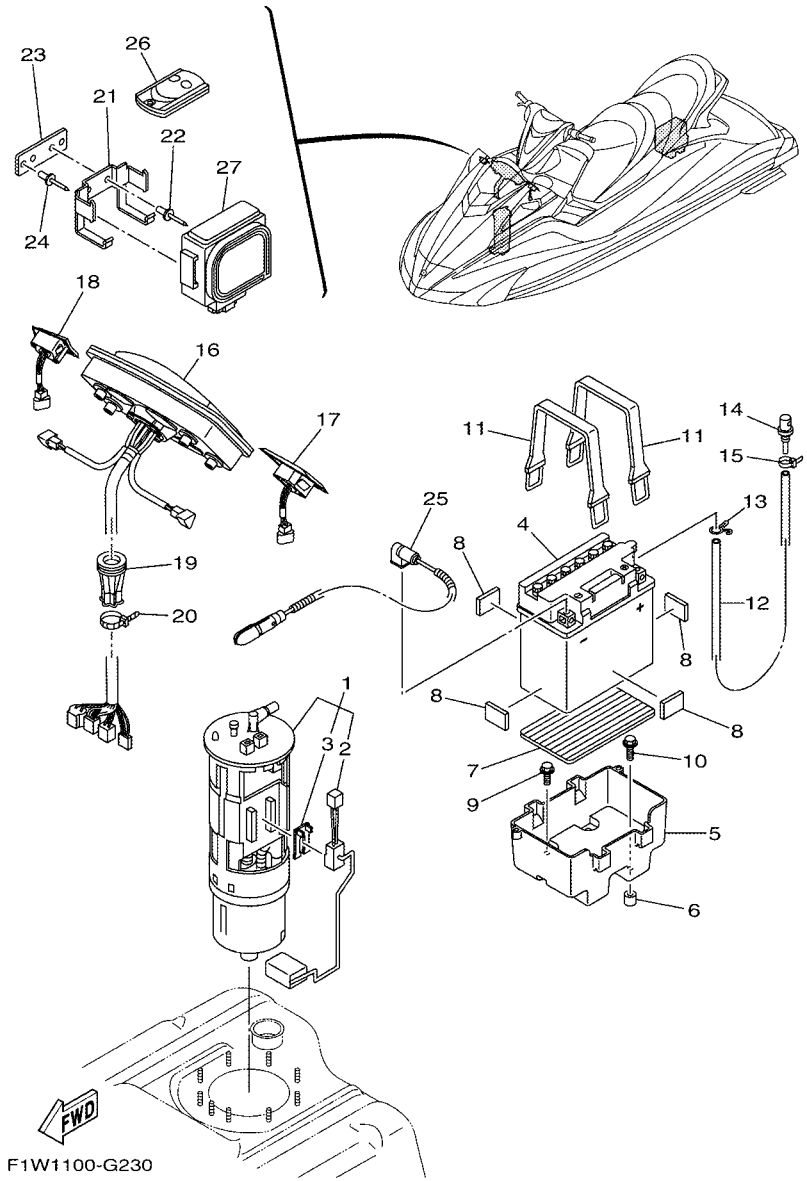

FIG. 23 ELECTRICAL 3

REF. NO.	PART NO.	DESCRIPTION	CAN	EUR	GENE			REMARKS
1	6S5–13907–00	FUEL PUMP COMP.	1	1	1			
2	6S5–682E0–00	.FUEL SENDER ASSY	1	1	1			
3	60E–82556–00	.DAMPER, STOPPER	1	1	1			
4	EU0–82110–09	BATTERY ASSY (YB16CL-B)	1	1	1			YUASA
5	GP7–U8211–00	CASE, BATTERY	1	1	1			
6	F1B–6821G–01	PLATE, BATTERY	2	2	2			
7	F1S–U8221–00	PAD, BATTERY	1	1	1			
8	EU0–U8221–30	PAD, BATTERY 2	4	4	4			
9	90119–069US	BOLT, WITH WASHER	2	2	2			
10	90119–06832	BOLT, WITH WASHER	2	2	2			
11	EU0–U821D–00	BAND,BATTERY 1	2	2	2			
12	F0D–U785G–10	HOSE, AIR VENT	1	1	1			
13	90467–089U1	CLIP	1	1	1			
14	GJ3–6215F–00	NIPPLE	1	1	1			
15	90465–11829	CLAMP	1	1	1			
16	F1W–6820A–01	METER ASSY	1	1	1			
17	F1X–68090–00	SWITCH ASSY.	1	1	1			
18	F1X–68090–10	SWITCH ASSY.	1	1	1			
19	F1X–U822E–00	GROMMET	1	1	1			
20	90464–32801	CLAMP	1	1	1			
21	F1W–U826C–00	BRACKET	1	1	1			
22	90267–489U1	RIVET,BLIND	2	2	2			
23	F1W–U8376–00	PLATE	1	1	1			
24	90267–489U1	RIVET,BLIND	2	2	2			
25	6S5–82116–00	WIRE, MINUS LEAD	1	1	1			
26	6B6–86261–00	TRANSMITTER COMP	2					FOR CAN
	6B6–86261–10	TRANSMITTER COMP		2	2			FOR EUR, GENE

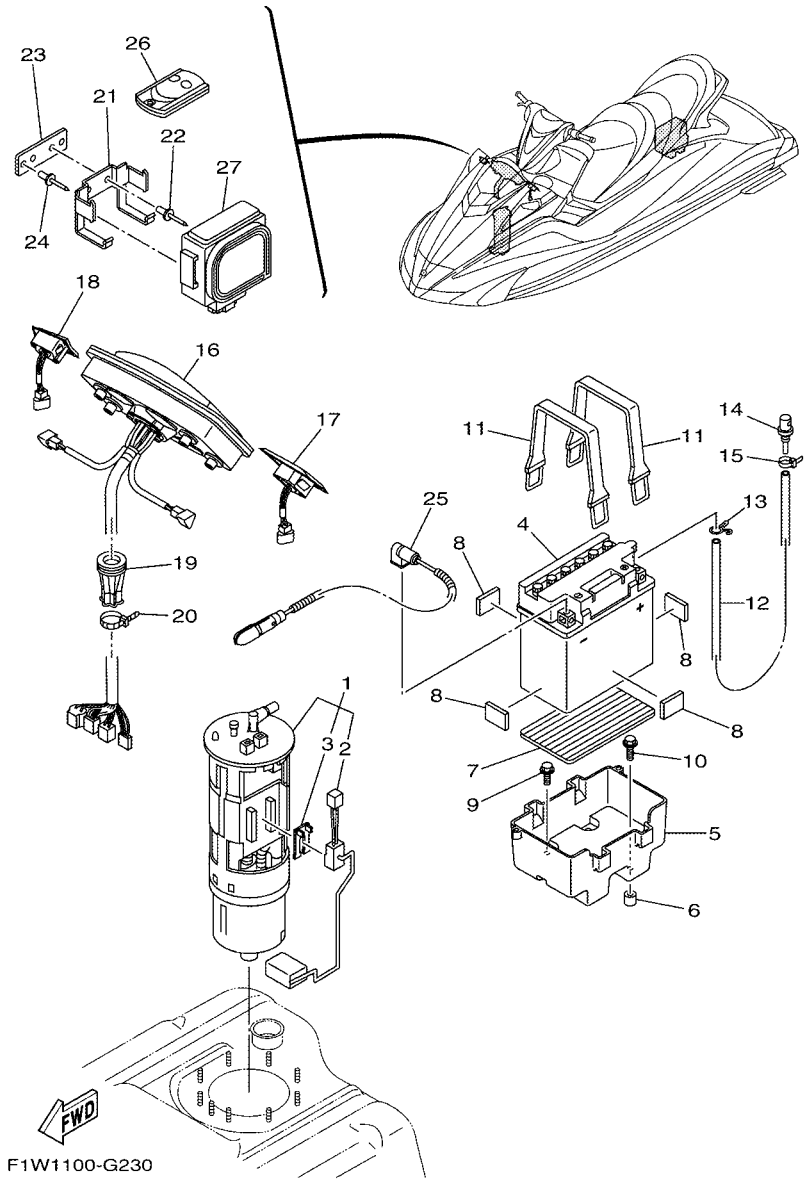

FIG. 23 ELECTRICAL 3

REF. NO.	PART NO.	DESCRIPTION	CAN	EUR	GENE			REMARKS
27	6B6–86265–00	RECIVER COMP	1					FOR CAN
	6B6–86265–10	RECIVER COMP		1	1			FOR EUR, GENE

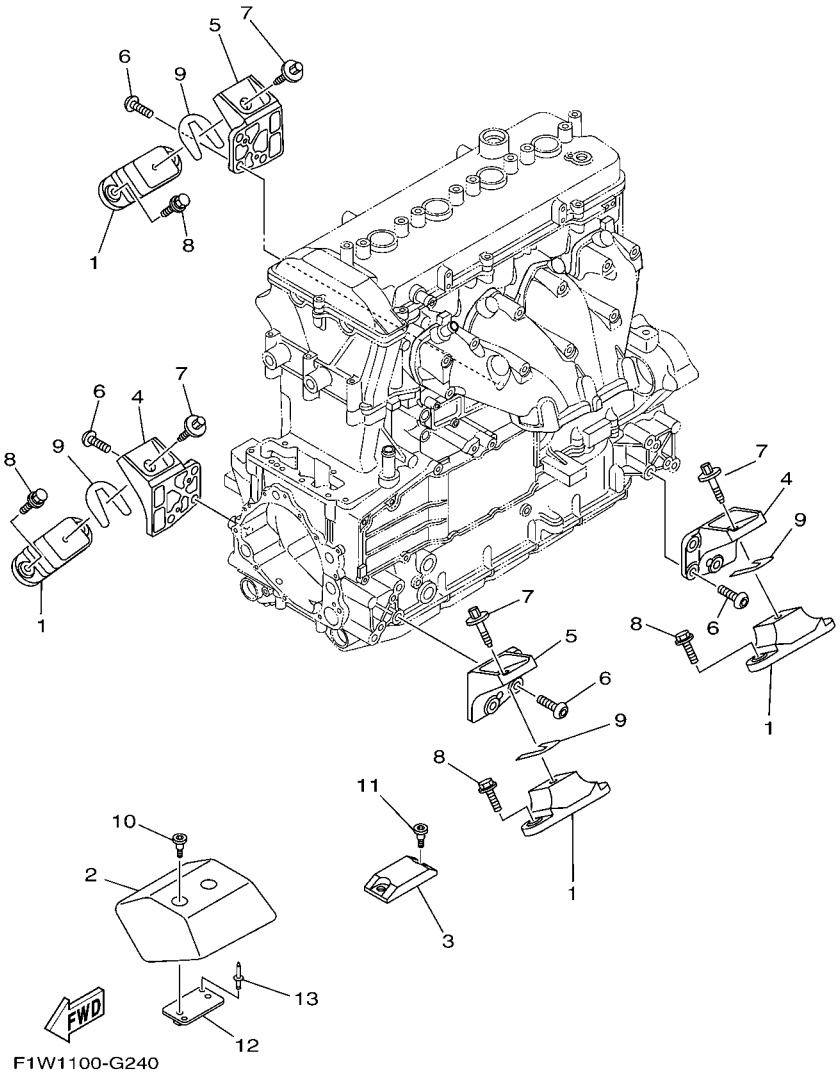

FIG. 24 ENGINE MOUNT

REF. NO.	PART NO.	DESCRIPTION	CAN	EUR	GENE			REMARKS
1	67X–44517–10–94	MOUNT RUBBER	4	4	4			
2	6BH–G4532–00	STOPPER, UPPER MOUNT	1	1	1			
3	6BH–G4574–00	STOPPER, LOWER MOUNT RUBBER	1	1	1			
4	6S5–41661–00–94	BRACKET 1	2	2	2			
5	6S5–41662–00–94	BRACKET 2	2	2	2			
6	90149–10052	SCREW	12	12	12			
7	90119–08859	BOLT, WITH WASHER	4	4	4			
8	90119–08823	BOLT, WITH WASHER	8	8	8			
9	EU0–U7354–00–01	SHIM (T=0.1)	10	10	10			UR
	EU0–U7354–00–03	SHIM (T=0.3)	10	10	10			UR
	EU0–U7354–00–05	SHIM (T=0.5)	10	10	10			UR
	EU0–U7354–00–10	SHIM (T=1.0)	10	10	10			UR
	EU0–U7354–00–20	SHIM (T=2.0)	10	10	10			UR
10	90109–06874	BOLT	2	2	2			
11	90109–06875	BOLT	2	2	2			
12	F1W–U732B–00	PLATE	1	1	1			
13	90267–489U2	RIVET, BLIND	2	2	2			

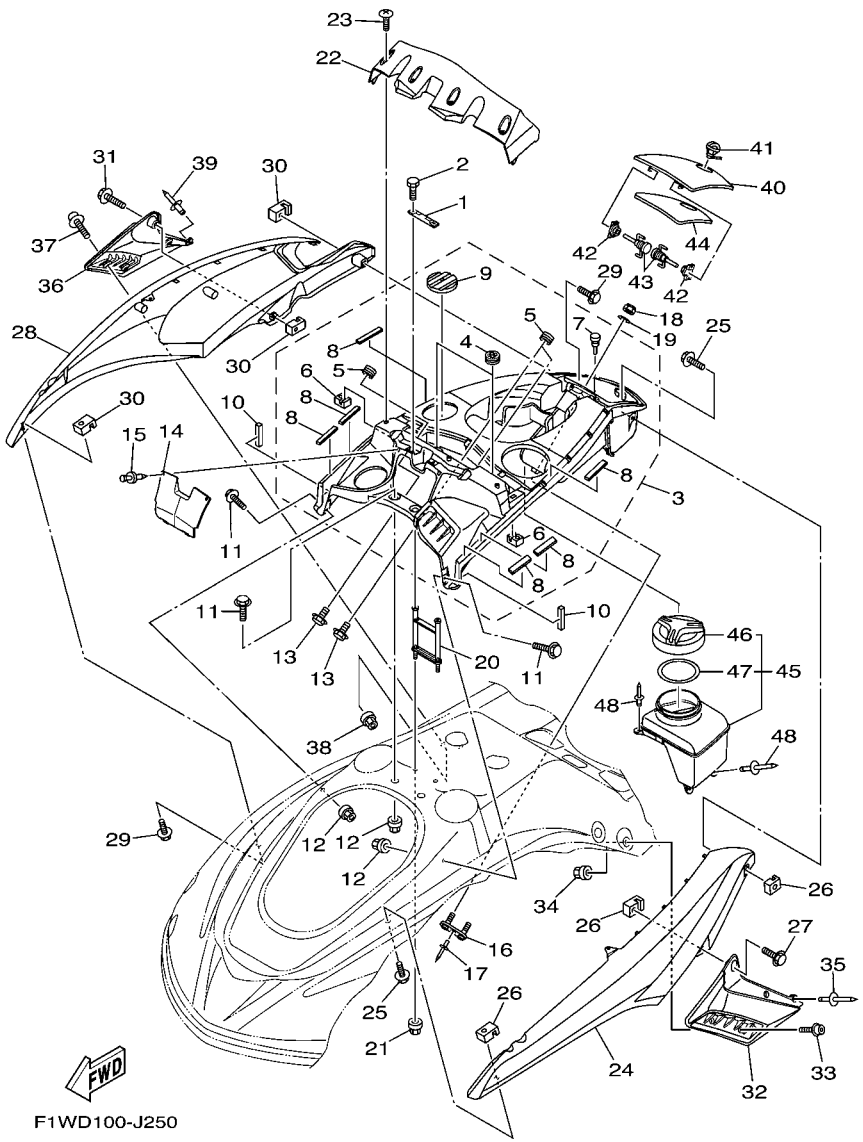

FIG. 25 ENGINE HATCH 1

REF. NO.	PART NO.	DESCRIPTION	CAN	EUR	GENE			REMARKS
1	F1W–U517F–00	HOOK,LID LOCK	1	1	1			
2	90101–05800	BOLT	2	2	2			
3	F1W–U5508–02	CENTER COVER ASSY.	1	1	1			FOR GRAY
	F1W–U5508–22	CENTER COVER ASSY.	1	1	1			FOR BLUE
4	F1X–U828E–01	.DAMPER 1	2	2	2			
5	90480–19800	.GROMMET	4	4	4			
6	F1X–U517E–01	.NUT	2	2	2			
7	90605–502U2	.PLUG	1	1	1			
8	F0X–U515E–01	.DAMPER 2	6	6	6			
9	F1X–U3844–01	.MAT	1	1	1			
10	F1W–U518D–00	PACKING	2	2	2			
11	90119–06880	BOLT, WITH WASHER	4	4	4			
12	90185–06014	NUT, SELF-LOCKING	4	4	4			
13	90119–05803	BOLT, WITH WASHER	4	4	4			
14	F1W–U555B–00	SEAL, COVER CENTER	1	1	1			
15	F1W–U2698–00	RIVET	2	2	2			
16	F1X–U5372–00	BRACKET	1	1	1			
17	90267–489U1	RIVET,BLIND	1	1	1			
18	9572R–06300	NUT, NYLON	2	2	2			
19	9299R–06200	WASHER	2	2	2			
20	F1W–U555D–02	BRKT., COVER CENTER 1	1	1	1			
21	90185–06014	NUT, SELF-LOCKING	2	2	2			
22	F1W–U8262–10–P0	COVER METER	1	1	1			NME
23	90149–05903	SCREW	4	4	4			
24	F1W–U377B–10–P0	COVER,SIDE 1	1	1	1			LNMP FOR GRAY
	F1W–U377B–30–P1	COVER,SIDE 1	1	1	1			DPBM11 FOR BLUE
25	90119–06880	BOLT, WITH WASHER	3	3	3			

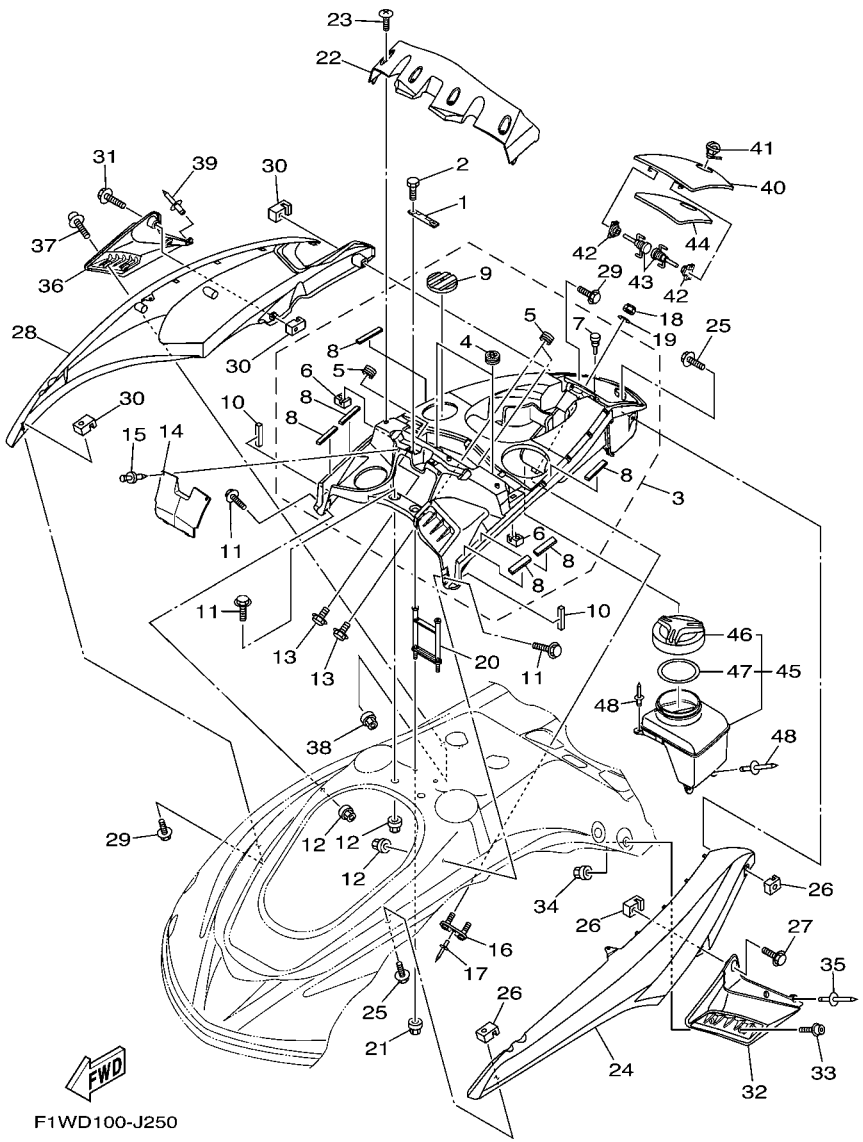

FIG. 25 ENGINE HATCH 1

REF. NO.	PART NO.	DESCRIPTION	CAN	EUR	GENE			REMARKS
26	F1X–U517E–01	NUT	3	3	3			
27	90119–06880	BOLT, WITH WASHER	1	1	1			
28	F1W–U377C–10–P0	COVER,SIDE 2	1	1	1			LNMP FOR GRAY
	F1W–U377C–30–P1	COVER,SIDE 2	1	1	1			DPBM11 FOR BLUE
29	90119–06880	BOLT, WITH WASHER	3	3	3			
30	F1X–U517E–01	NUT	3	3	3			
31	90119–06880	BOLT, WITH WASHER	1	1	1			
32	F1W–U377F–01	ORNAMENT, SIDE LH	1	1	1			
33	90110–06823	BOLT, HEXAGON SOCKET HEAD	3	3	3			
34	90185–06014	NUT, SELF-LOCKING	3	3	3			
35	90267–48807	RIVET, BLIND	1	1	1			
36	F1W–U377G–01	ORNAMENT, SIDE RH	1	1	1			
37	90110–06823	BOLT, HEXAGON SOCKET HEAD	3	3	3			
38	90185–06014	NUT, SELF-LOCKING	3	3	3			
39	90267–48807	RIVET, BLIND	1	1	1			
40	F1W–U517H–01	LID HATCH	1	1	1			
41	F1X–62875–00	LOCK	1	1	1			
42	F1B–60210–00	GEAR ASSY	2	2	2			
43	F1B–6517R–00	PIN, HINGE	2	2	2			
44	F1W–U519D–01	PACKING CASE	1	1	1			
45	F1W–U591A–00	CASE,ASSY 1	1	1	1			
46	F1W–U591C–00	.CAP,CASE	1	1	1			
47	F1W–U591D–00	.PACKING,CASE	1	1	1			
48	90267–489U6	RIVET, BLIND	3	3	3			

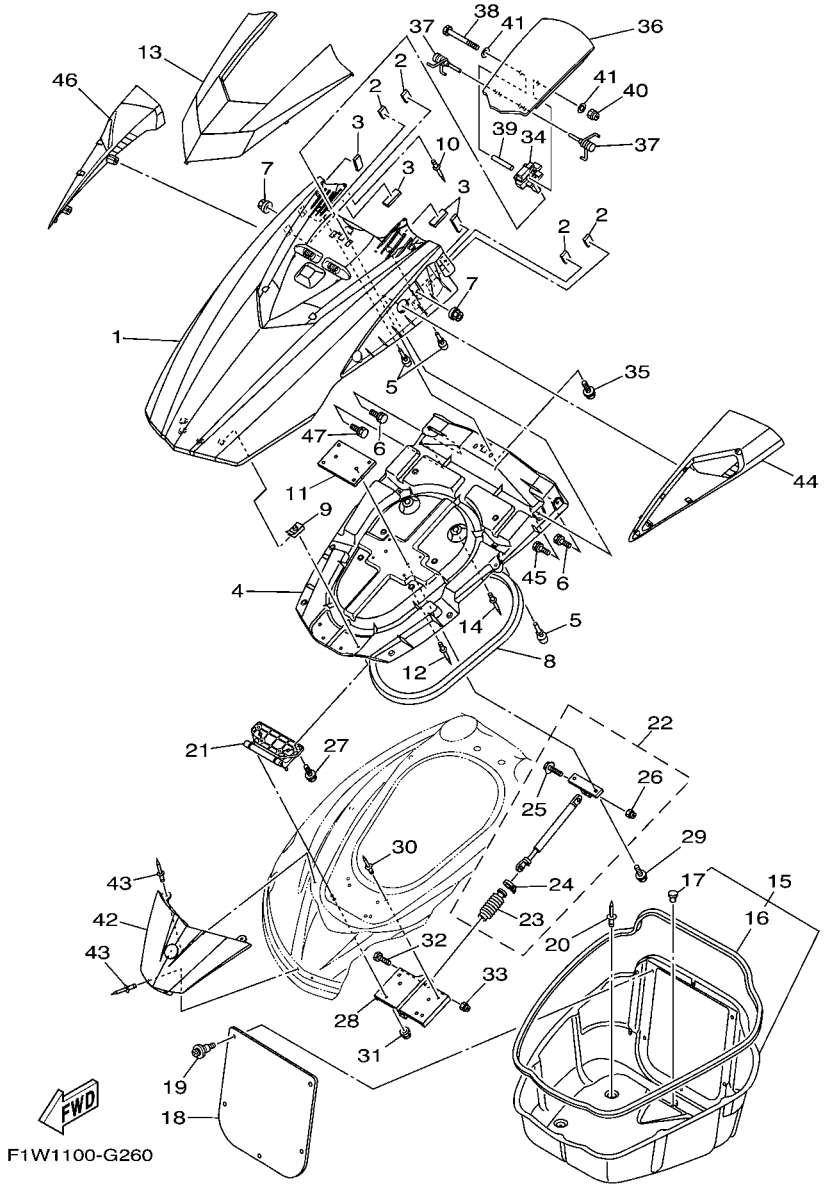

FIG. 26 ENGINE HATCH 2

REF. NO.	PART NO.	DESCRIPTION	CAN	EUR	GENE			REMARKS
1	F1W–U517B–10–P0	LID, ENGINE ROOM	1	1	1			LNMP FOR GRAY
	F1W–U517B–30–P1	LID, ENGINE ROOM	1	1	1			DPBM11 FOR BLUE
2	F1W–U5136–00	STOPPER, HATCH 2	4	4	4			
3	F1K–U266B–00	PACKING 3	4	4	4			
4	F1W–U213B–01	COVER,VENTILATOR 1	1	1	1			
5	F1W–U3768–01	CUSHION, RUBBER	4	4	4			
6	90119–06880	BOLT, WITH WASHER	2	2	2			
7	90185–06014	NUT, SELF-LOCKING	2	2	2			
8	F1K–U2663–00	PACKING 1	1	1	1			
9	90183–06902	NUT, SPRING	4	4	4			
10	90267–48807	RIVET, BLIND	12	12	12			
11	F1W–U5148–00	PLATE, HATCH	1	1	1			
12	90267–48807	RIVET, BLIND	4	4	4			
13	F1W–U515N–10–P0	VISOR	1	1	1			NME
14	90267–48807	RIVET, BLIND	6	6	6			
15	F1W–U475B–04	LOCKER,BOW	1	1	1			
16	F1W–U266C–00	.PACKING 4	1	1	1			
17	90605–502U1	.PLUG, BLIND	1	1	1			
18	F1W–U475F–01	PLATE, LOKER BOW	1	1	1			
19	90269–08801	RIVET	5	5	5			
20	90267–489UP	RIVET, BLIND	4	4	4			
21	F1W–U517D–01	HINGE, LID	1	1	1			
22	F1W–6514S–00	DAMPER ASSY	1	1	1			
23	F1W–6514T–00	.COVER, DAMPER	1	1	1			
24	1UA–82591–00	.BAND	1	1	1			
25	90109–06218	.BOLT	1	1	1			
26	95720–06300	.NUT, SELF-LOCKING	1	1	1			

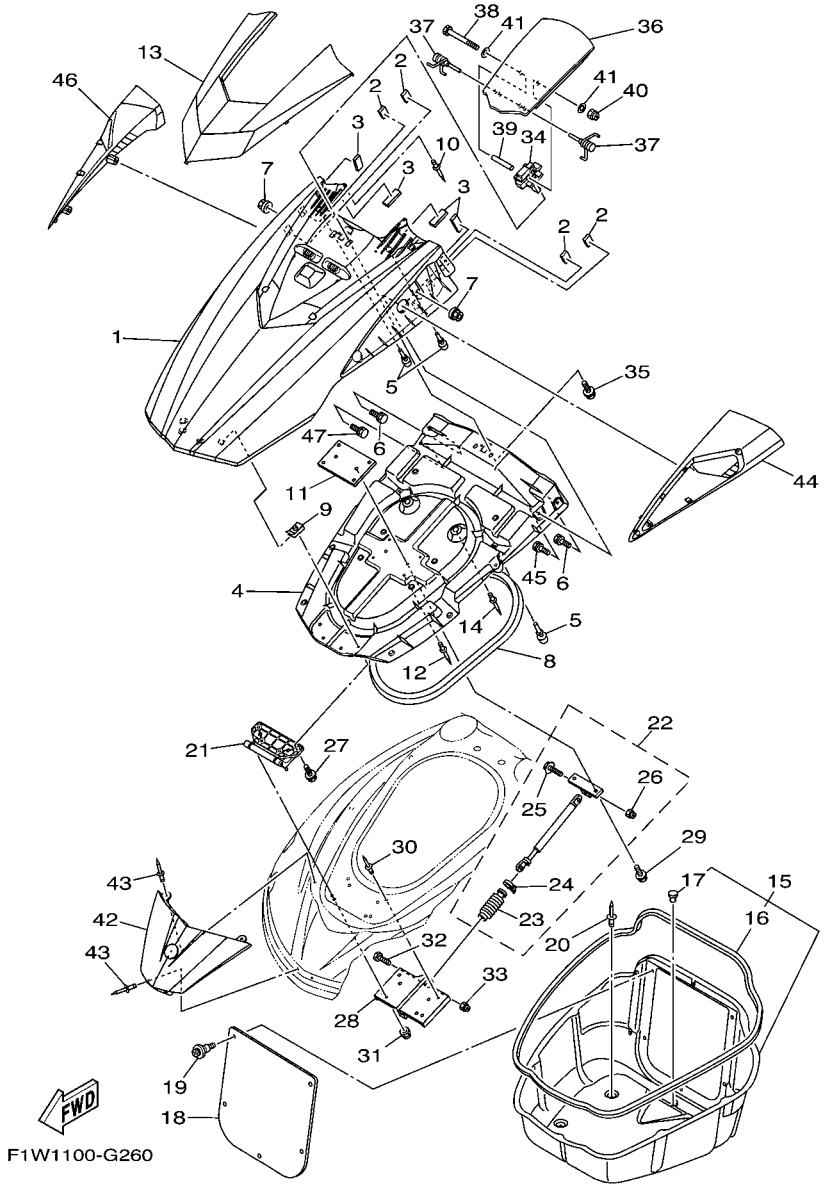

FIG. 26 ENGINE HATCH 2

REF. NO.	PART NO.	DESCRIPTION	CAN	EUR	GENE			REMARKS
27	90119–06896	BOLT, WITH WASHER	4	4	4			
28	F1W–U518E–02	PLATE, HINGE LID	1	1	1			
29	90119–069UH	BOLT, WITH WASHER	2	2	2			
30	90267–48020	RIVET, BLIND	4	4	4			
31	9572R–06300	NUT, NYLON	4	4	4			
32	90109–06218	BOLT	1	1	1			
33	9572R–06300	NUT, NYLON	1	1	1			
34	F1W–6517C–02	LOCK, LID	1	1	1			
35	90119–059U4	BOLT, WITH WASHER	2	2	2			
36	F1W–U515P–30	VISOR, 2	1	1	1			
37	F1W–6517R–00	PIN, HINGE	2	2	2			
38	F1W–U515H–00	SHAFT A	1	1	1			
39	F1W–U2693–00	PIPE	1	1	1			
40	9572R–05300	NUT, FLANGE	1	1	1			
41	9299R–05200	WASHER	2	2	2			
42	F1W–U513M–10–P0	COVER, FRONT	1	1	1			LNMP FOR GRAY
	F1W–U513M–30–P1	COVER, FRONT	1	1	1			DPBM11 FOR BLUE
43	90267–489U6	RIVET, BLIND	4	4	4			
44	F1W–U590D–F1	MIRROR ASSY. 1	1	1	1			
45	90119–089UL	BOLT, WITH WASHER	2	2	2			
46	F1W–U590E–F1	MIRROR ASSY. 2	1	1	1			
47	90119–089UL	BOLT, WITH WASHER	2	2	2			

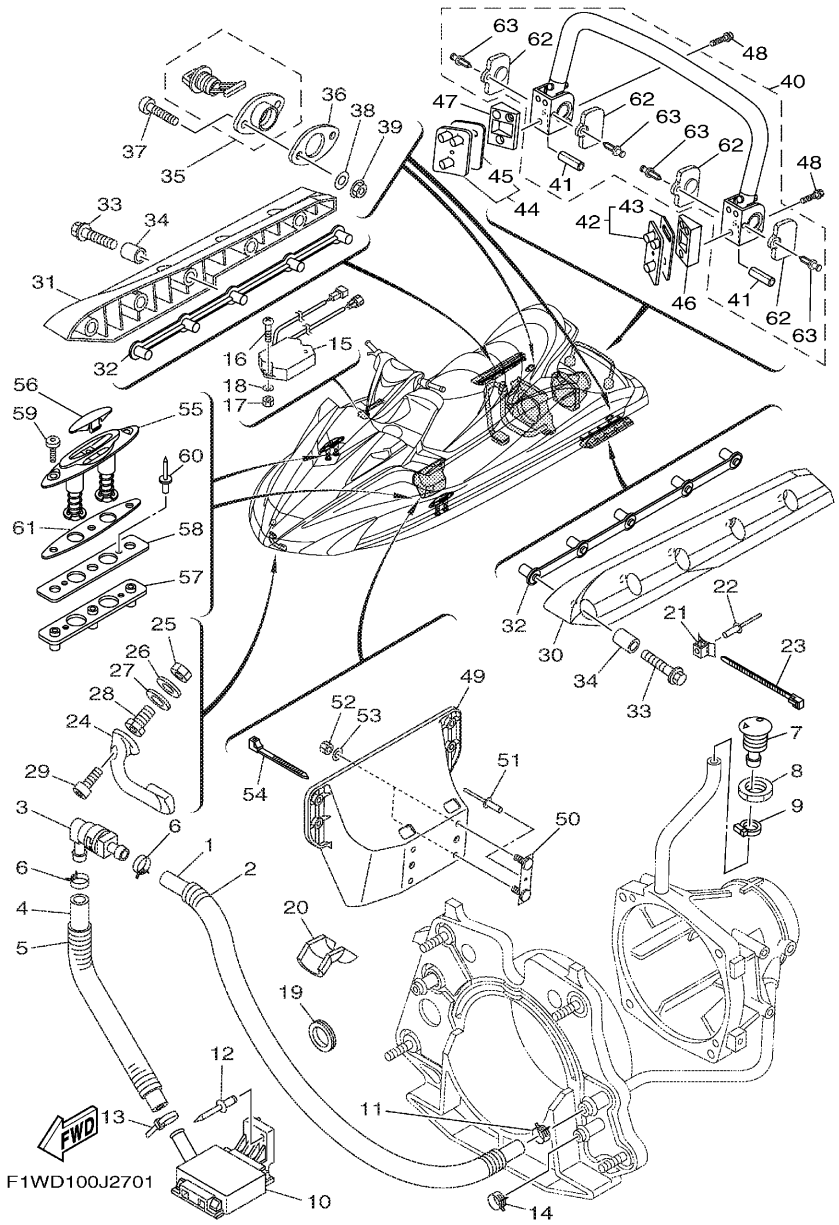

FIG. 27 HULL & DECK

REF. NO.	PART NO.	DESCRIPTION	CAN	EUR	GENE			REMARKS
1	90445–20804	HOSE (L860)	1	1	1			
2	90446–27M73	HOSE (L700)	1	1	1			
3	68N–5112T–00	JOINT, HOSE	1	1	1			
4	90445–20800	HOSE (L500)	1	1	1			
5	90446–27M55	TUBE (L400)	1	1	1			
6	90467–18804	CLIP	2	2	2			
7	F1W–U269B–00	SPOUT	1	1	1			
8	EU0–61652–00	NUT	1	1	1			
9	90601–118UF	BAND, HOSE 18	1	1	1			
10	F1B–U761D–02	STRAINER, BILGE	1	1	1			
11	90467–21800	CLIP	1	1	1			
12	90267–489U8	RIVET, BLIND	1	1	1			
13	90601–200U1	BAND	1	1	1			
14	90467–200A0	CLIP	1	1	1			
15	F1X–U8K22–01	SENSOR, COMPASS	1	1	1			
16	9788R–05025	SCREW, PAN HEAD	2	2	2			
17	9572R–05300	NUT, FLANGE	2	2	2			
18	9299R–05200	WASHER	2	2	2			
19	90480–38800	GROMMET	1	1	1			
20	F1S–U828H–01	TRIM, 1	1	1	1			
21	F1W–U828M–00	BASE, CLAMP	2	2	2			
22	90267–48802	RIVET, BLIND	2	2	2			
23	90464–32801	CLAMP	2	2	2			
24	F1K–61624–00	BOWEYE 1	1	1	1			
25	99780–12600	NUT.HEX.(COARS)	2	2	2			
26	92990–12200	WASHER, PLAIN	2	2	2			
27	F0X–61637–00	WASHER	2	2	2			

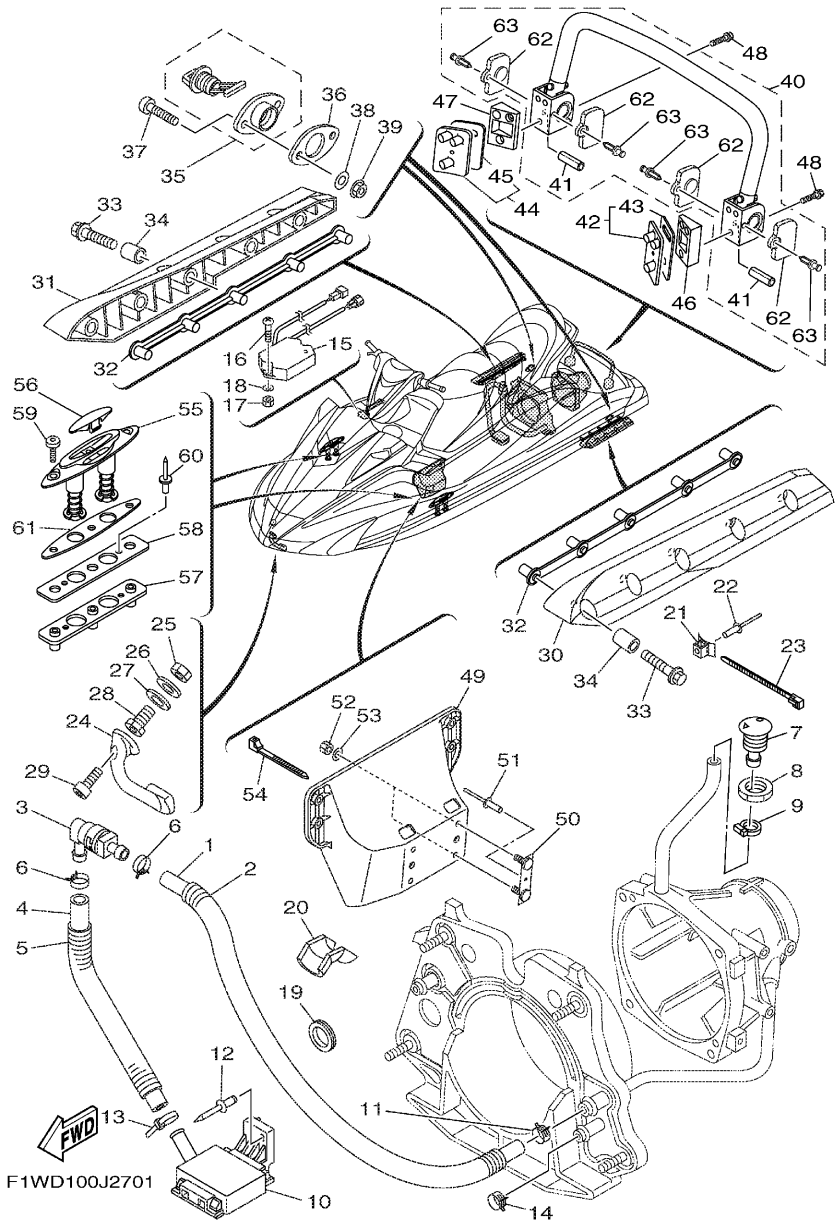

FIG. 27 HULL & DECK

REF. NO.	PART NO.	DESCRIPTION	CAN	EUR	GENE			REMARKS
28	F0X–61652–00	NUT (BOLT/NUT)	2	2	2			
29	90110–06040	BOLT, HEXAGON SOCKET HEAD	2	2	2			
30	F1S–U883N–01	STABILIZER LH	1	1	1			BLACK
31	F1S–U883P–01	STABILIZER RH	1	1	1			BLACK
32	F1X–U883T–01	BRACKET,STABILIZER	2	2	2			
33	90105–08860	BOLT, FLANGE	10	10	10			
34	F2N–U8169–00	SPACER	10	10	10			
35	F1S–U2280–00	DRAIN PLUG ASSY.	2	2	2			
36	F1S–U2285–00	PACKING, DRAIN	2	2	2			
37	9788R–05025	SCREW, PAN HEAD	4	4	4			
38	9299R–05200	WASHER	4	4	4			
39	9572R–05300	NUT, FLANGE	4	4	4			
40	F1W–U278A–01	LADDER, STEP ASSY	1	1	1			
41	F1W–U771H–00	.SLEEVE 1	2	2	2			
42	F2H–U278F–00	BRACKET, LADDER LH	1	1	1			
43	F2H–U278H–00	.PACKING, BRKT. 1	1	1	1			
44	F2H–U278G–00	BRACKET, LADDER RH	1	1	1			
45	F2H–U278H–00	.PACKING, BRKT. 1	1	1	1			
46	F2H–U278K–00	BRACKET 1	1	1	1			
47	F2H–U278L–00	BRACKET 2	1	1	1			
48	90119–08844	BOLT, WITH WASHER	6	6	6			
49	F1W–U8572–01	BRACKET 2	1	1	1			
50	F1K–U826C–03	BRACKET	2	2	2			
51	90267–489U1	RIVET,BLIND	2	2	2			
52	9572R–08300	NUT, FLANGE	4	4	4			
53	9299R–08200	WASHER	4	4	4			
54	90464–32801	CLAMP	1	1	1			

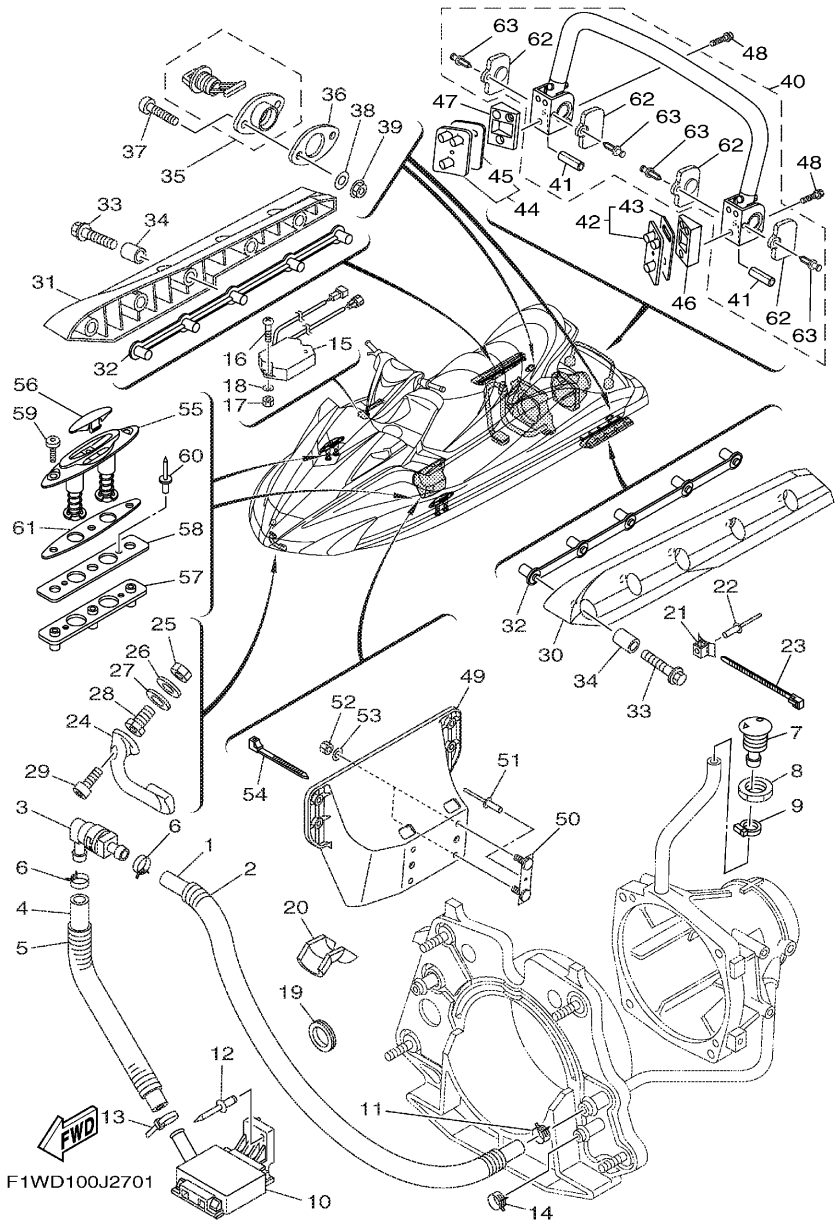

FIG. 27 HULL & DECK

REF. NO.	PART NO.	DESCRIPTION	CAN	EUR	GENE			REMARKS
55	F1X–U163A–01	CLEAT ASSY.	2	2	2			
56	F1X–U826D–00	COVER	2	2	2			
57	F1X–U826C–10	BRACKET	2	2	2			
58	F1X–U2157–00	PACKING	2	2	2			
59	F1W–U2624–00	BOLT	6	6	6			
60	90267–489U6	RIVET, BLIND	4	4	4			
61	F1X–U2284–00	PACKING	2	2	2			
62	F2C–U377H–00	.SIDE COVER	4	4	4			
63	F2C–U1314–00	.PIN	4	4	4			

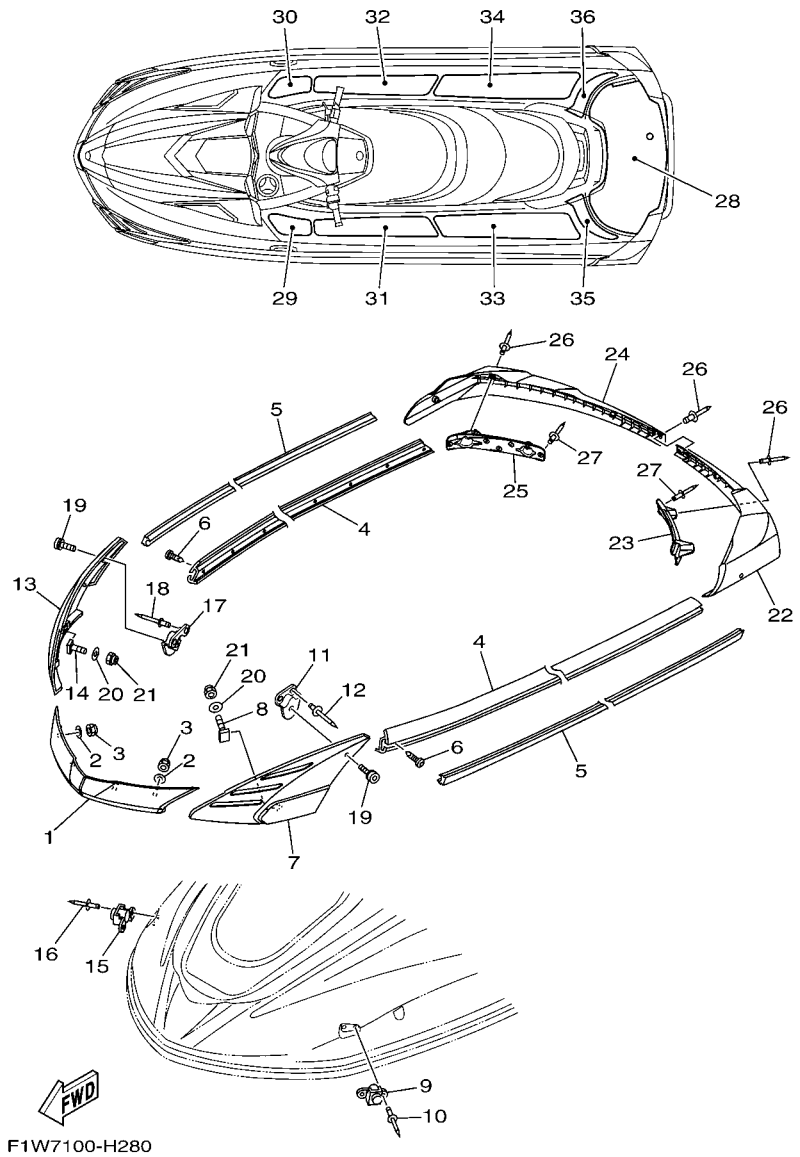

FIG. 28 GUNWALE & MAT

REF. NO.	PART NO.	DESCRIPTION	CAN	EUR	GENE			REMARKS
1	F1W–U2501–11	BOW GUNWALE COMP.	1	1	1			GRAY
2	9299R–06200	WASHER	4	4	4			
3	9572R–06300	NUT, NYLON	4	4	4			
4	F1B–U2512–00	GUNWALE, SIDE	2	2	2			
5	F1B–U2519–10	INNER,GUNWALE	2	2	2			YAMAHA BLACK
6	90169–059U1	SCREW,TAPPING	36	36	36			
7	F1W–U252E–10	JOINT, GUNWALE LH	1	1	1			GRAY
8	F1W–U491K–00	BOLT, SPECIAL	2	2	2			
9	F1W–U250B–00	GROMMET ASSY	1	1	1			
10	90267–489U6	RIVET, BLIND	2	2	2			
11	F1W–U4949–00	BRACKET	1	1	1			
12	90267–489U6	RIVET, BLIND	2	2	2			
13	F1W–U252F–10	JOINT, GUNWALE RH	1	1	1			GRAY
14	F1W–U491K–00	BOLT, SPECIAL	2	2	2			
15	F1W–U250B–00	GROMMET ASSY	1	1	1			
16	90267–489U6	RIVET, BLIND	2	2	2			
17	F1W–U4949–00	BRACKET	1	1	1			
18	90267–489U6	RIVET, BLIND	2	2	2			
19	90111–06114	BOLT,HEX. SOCKET BUTTON	2	2	2			
20	9299R–06200	WASHER	4	4	4			
21	9572R–06300	NUT, NYLON	4	4	4			
22	F1W–U251D–11	GUNWALE, STERN 1	1	1	1			GRAY
23	F1W–U251L–01	BRACKET, GUNWALE 1	1	1	1			
24	F1W–U251E–11	GUNWALE, STERN 2	1	1	1			GRAY
25	F1W–U251M–01	BRACKET, GUNWALE 2	1	1	1			
26	90267–48825	RIVET, BLIND	9	9	9			
27	90267–489U8	RIVET, BLIND	10	10	10			

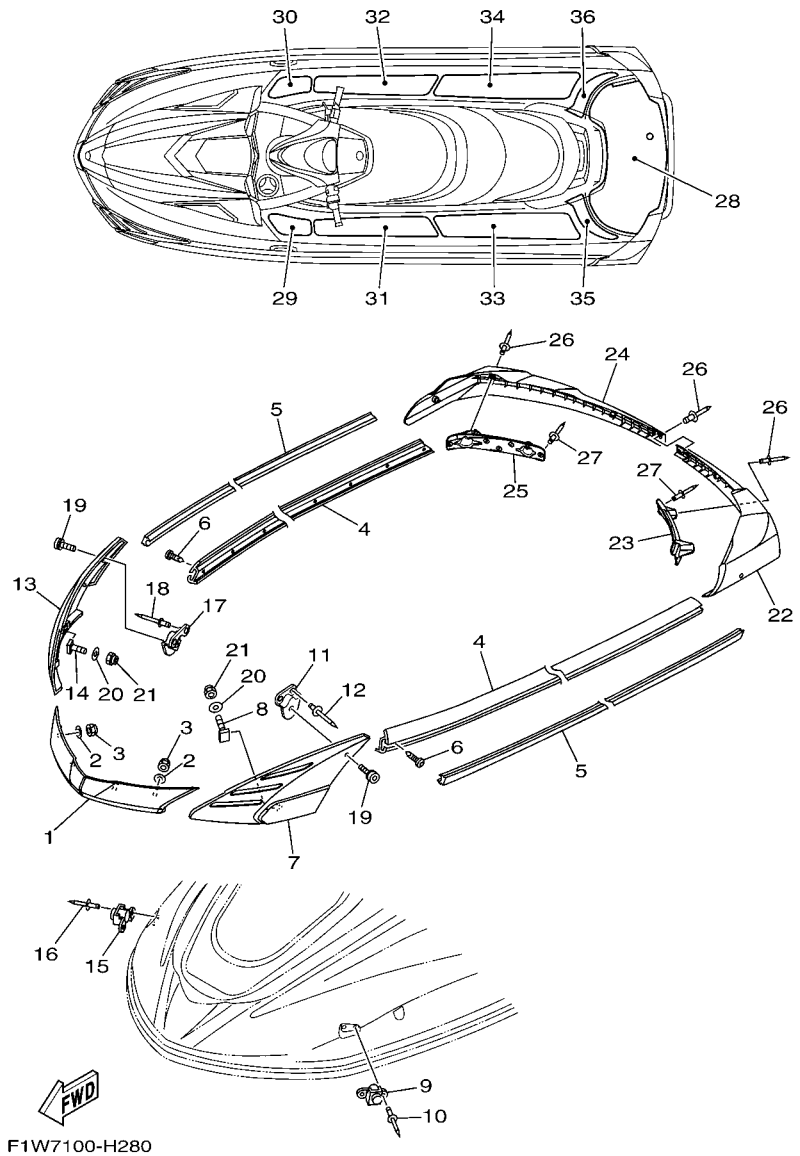

FIG. 28 GUNWALE & MAT

REF. NO.	PART NO.	DESCRIPTION	CAN	EUR	GENE			REMARKS
28	F1W–U3581–00	MAT, UPPER	1	1	1			DARK GREY
29	F1W–U351H–00	MAT, STEP 1	1	1	1			DARK GREY
30	F1W–U351J–00	MAT, STEP 2	1	1	1			DARK GREY
31	F1W–U351K–00	MAT, STEP 3	1	1	1			DARK GREY
32	F1W–U351M–00	MAT, STEP 4	1	1	1			DARK GREY
33	F1W–U351N–00	MAT, STEP 5	1	1	1			DARK GREY
34	F1W–U351P–00	MAT, STEP 6	1	1	1			DARK GREY
35	F1W–U351R–00	MAT, STEP 7	1	1	1			DARK GREY
36	F1W–U351S–00	MAT, STEP 8	1	1	1			DARK GREY

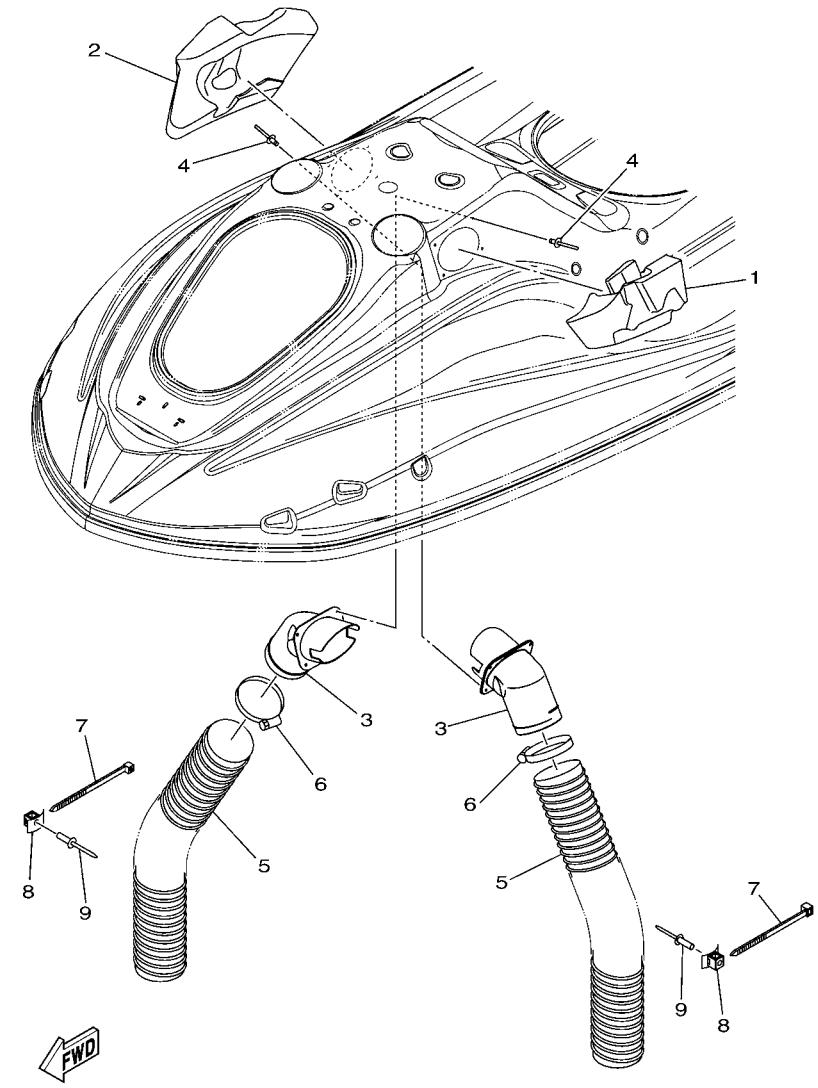

F1WD100-J290

FIG. 29 VENTILATION

REF. NO.	PART NO.	DESCRIPTION	CAN	EUR	GENE			REMARKS
1	F1W–U2187–00	BOX, INDUCTION 1	1	1	1			
2	F1W–U2188–00	BOX, INDUCTION 2	1	1	1			
3	F1W–U2127–01	BASE, AIR INTAKE	2	2	2			
4	90267–48806	RIVET, BLIND	8	8	8			
5	F0X–U213G–01	HOSE, VENTILATOR 2	2	2	2			
6	90601–200U7	BAND	2	2	2			
7	90464–99804	CLAMP	2	2	2			
8	F1W–U828M–00	BASE, CLAMP	2	2	2			
9	90267–48802	RIVET, BLIND	2	2	2			

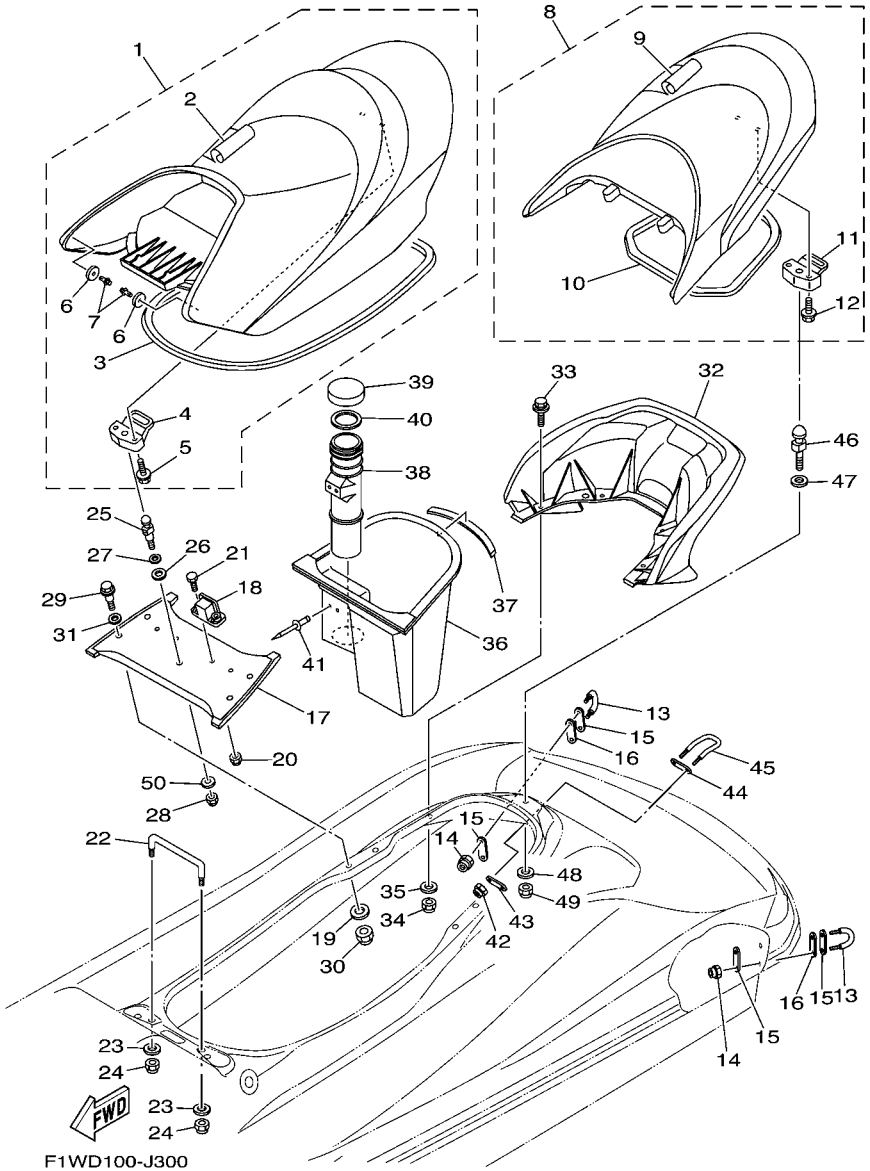

FIG. 30 SEAT & UNDER LOCKER

REF. NO.	PART NO.	DESCRIPTION	CAN	EUR	GENE			REMARKS
1	F1W–U371A–20	DOUBLE SEAT ASSY	1	1	1			
2	F1W–U371B–20	.COVER, SEAT 1	1	1	1			
3	F1W–U2664–01	.PACKING	1	1	1			
4	F1B–U3850–02	.SEAT LOCK ASSY	1	1	1			
5	90119–069UP	.BOLT, WITH WASHER	2	2	2			
6	F1W–U251C–00	.BUMPER, SIDE	2	2	2			
7	90267–48834	.RIVET, BLIND	2	2	2			
8	F1W–U372A–20	SINGLE SEAT ASSY	1	1	1			
9	F1W–U372B–20	.COVER, SEAT	1	1	1			
10	F1W–U266D–00	.PACKING 5	1	1	1			
11	F1B–U3850–02	.SEAT LOCK ASSY	1	1	1			
12	90119–069UP	.BOLT, WITH WASHER	2	2	2			
13	F1K–61628–00	STERN EYE	2	2	2			
14	9572R–08300	NUT, FLANGE	4	4	4			
15	GP7–U4953–10	PLATE A	4	4	4			
16	F1B–U1653–01	PACKING	2	2	2			
17	F1B–U8952–01	BEAM, DECK 1	1	1	1			
18	GU2–6378D–02	STAY,SEAT 2	2	2	2			
19	9299R–08200	WASHER	4	4	4			
20	9572R–06300	NUT, NYLON	4	4	4			
21	90101–069U0	BOLT	4	4	4			
22	F0X–6378C–00	STAY, SEAT 1	1	1	1			
23	90201–099U3	WASHER, PLATE	2	2	2			
24	9572R–08300	NUT, FLANGE	2	2	2			
25	F1B–U3774–00	PIN	1	1	1			
26	F0X–6375E–00	PACKING 1	1	1	1			
27	92990–12200	WASHER, PLAIN	1	1	1			

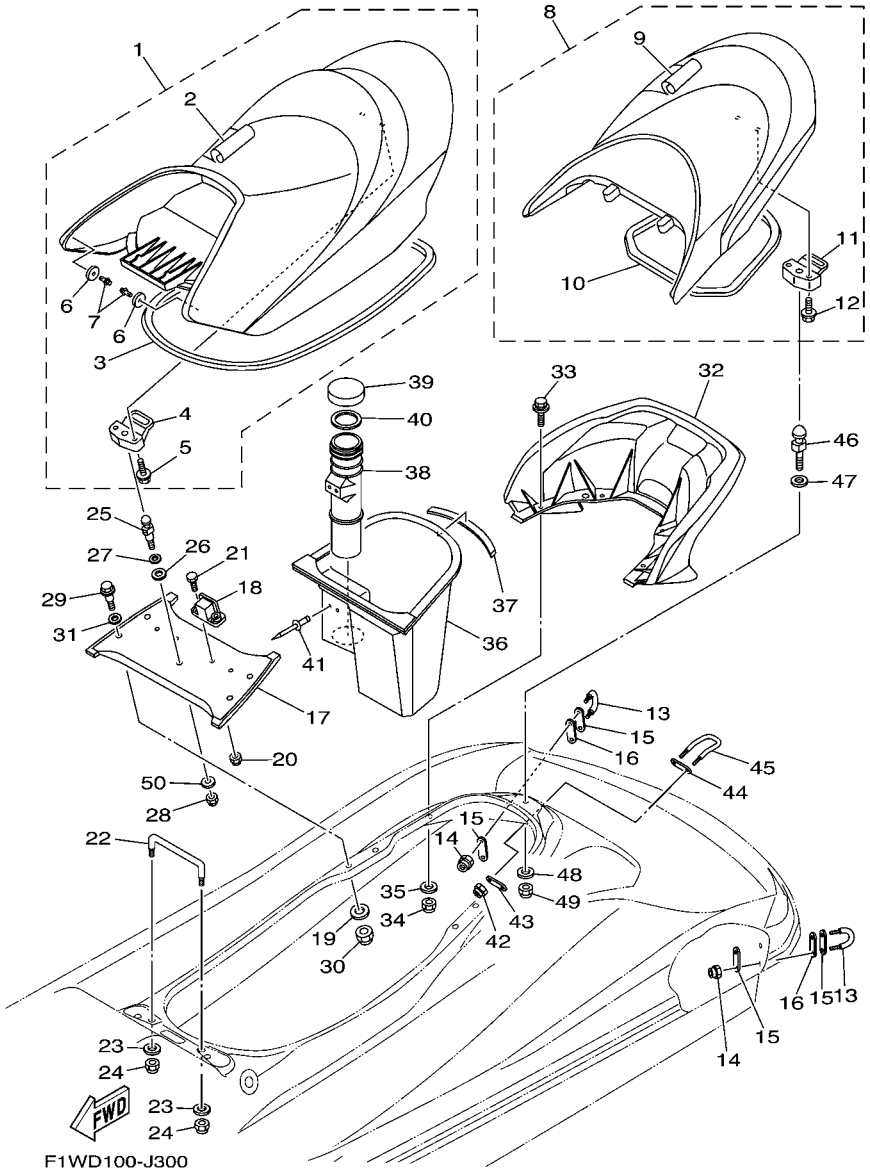

FIG. 30 SEAT & UNDER LOCKER

REF. NO.	PART NO.	DESCRIPTION	CAN	EUR	GENE			REMARKS
28	9572R–10300	NUT, NYLON	1	1	1			
29	F1B–U2624–00	BOLT	4	4	4			
30	9572R–08300	NUT, FLANGE	4	4	4			
31	9299R–10200	WASHER	4	4	4			
32	F1W–U271B–01	GRIP, HAND	1	1	1			
33	90119–08942	BOLT, WITH WASHER	4	4	4			
34	9572R–08300	NUT, FLANGE	4	4	4			
35	9299R–08200	WASHER	4	4	4			
36	F1B–U4742–01	LOCKER, UNDER 2	1	1	1			
37	F0X–U266E–01	PACKING,6	1	1	1			
38	F0X–U5983–01	BOX, FIRE EXTINGUISHER	1	1	1			
39	EW2–U5912–01	CAP, CASE	1	1	1			
40	EW2–U5913–01	PACKING, CASE	1	1	1			
41	90267–489UP	RIVET, BLIND	2	2	2			
42	9572R–08300	NUT, FLANGE	2	2	2			
43	GP7–U4953–10	PLATE A	1	1	1			
44	GP7–U4953–10	PLATE A	1	1	1			
45	F1B–U1629–00	SKI TOWS	1	1	1			
46	GH1–U3774–00	PIN	1	1	1			
47	90201–109U6	WASHER, PLATE	1	1	1			
48	9299R–10200	WASHER	1	1	1			
49	9572R–10300	NUT, NYLON	1	1	1			
50	9299R–10200	WASHER	1	1	1			

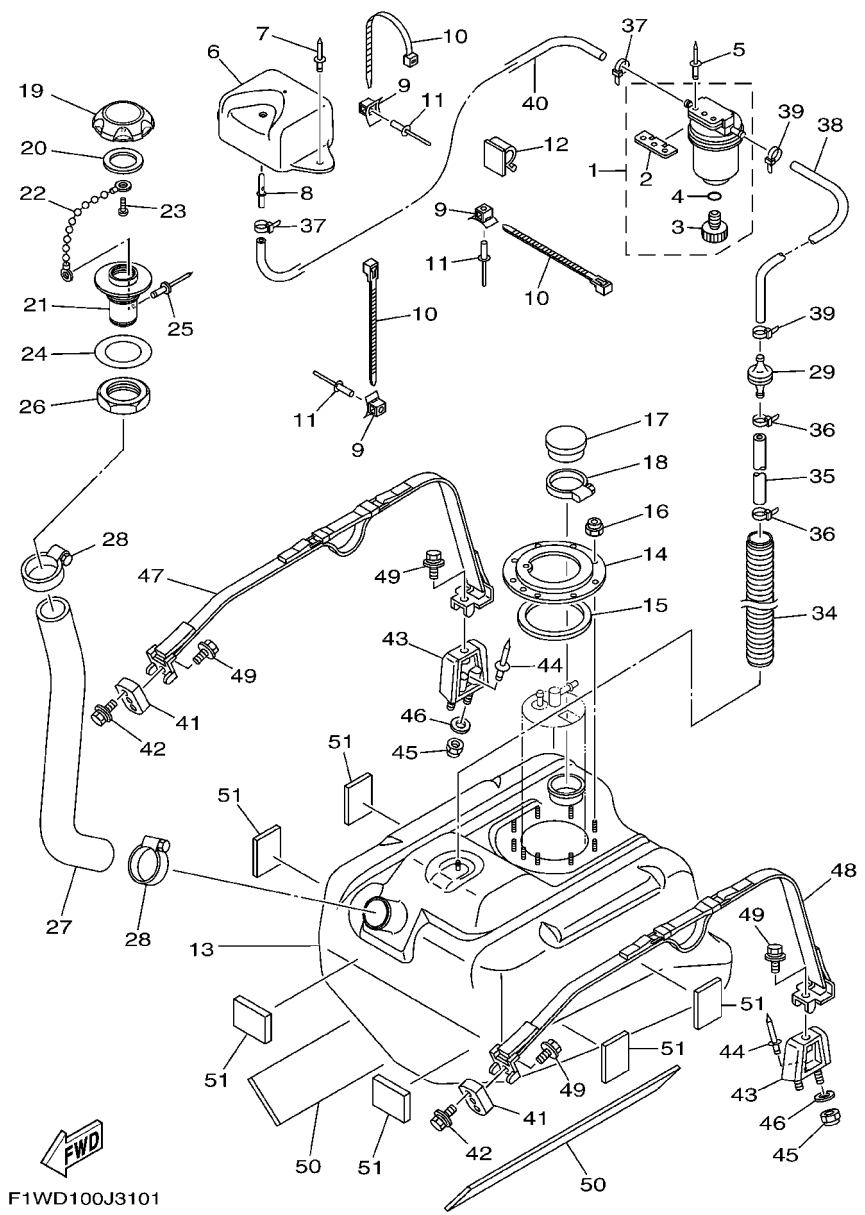

FIG. 31 FUEL TANK

REF. NO.	PART NO.	DESCRIPTION	CAN	EUR	GENE			REMARKS
1	F2F–6214A–00	FILTER, VENT ASSY	1	1	1			
2	EW2–62142–00	.PLATE, FILTER	1	1	1			
3	70R–24543–00	.PLUG, DRAIN	1	1	1			
4	70R–24489–00	.O-RING	1	1	1			
5	90267–489U2	RIVET, BLIND	2	2	2			
6	F1W–U2159–00	SOCKET, VENTILATION	1	1	1			
7	90267–489U6	RIVET, BLIND	2	2	2			
8	F1G–62149–00	PIPE, VENTILATION	1	1	1			
9	F1W–U828M–00	BASE, CLAMP	3	3	3			
10	90464–32801	CLAMP	3	3	3			
11	90267–489U6	RIVET, BLIND	3	3	3			
12	90464–17800	CLAMP	1	1	1			
13	F1W–U7711–01	TANK, FUEL	1	1	1			
14	F1B–U7773–00	RING	1	1	1			
15	F1B–67747–00	PACKING, SEAL	1	1	1			
16	9572R–06300	NUT, NYLON	9	9	9			
17	FN8–6771K–00	COVER	1	1	1			
18	90601–162U5	BAND, HOSE 62	1	1	1			
19	F2N–U7831–10	CAP, FUEL FILLER	1	1	1			BLACK
20	GP7–U7832–01	PACKING	1	1	1			
21	GP7–U7833–11	SOCKET	1	1	1			BLACK
22	GP7–U7835–00	CHAIN BALL	1	1	1			
23	90169–049U1	TAPPING SCREW	1	1	1			
24	GP7–U7834–10	PACKING FUEL FILLER	1	1	1			
25	90267–329UR	RIVET, BLIND	1	1	1			
26	GP7–U783F–00	NUT, FUEL FILLER	1	1	1			
27	F1W–U7844–00	HOSE	1	1	1			

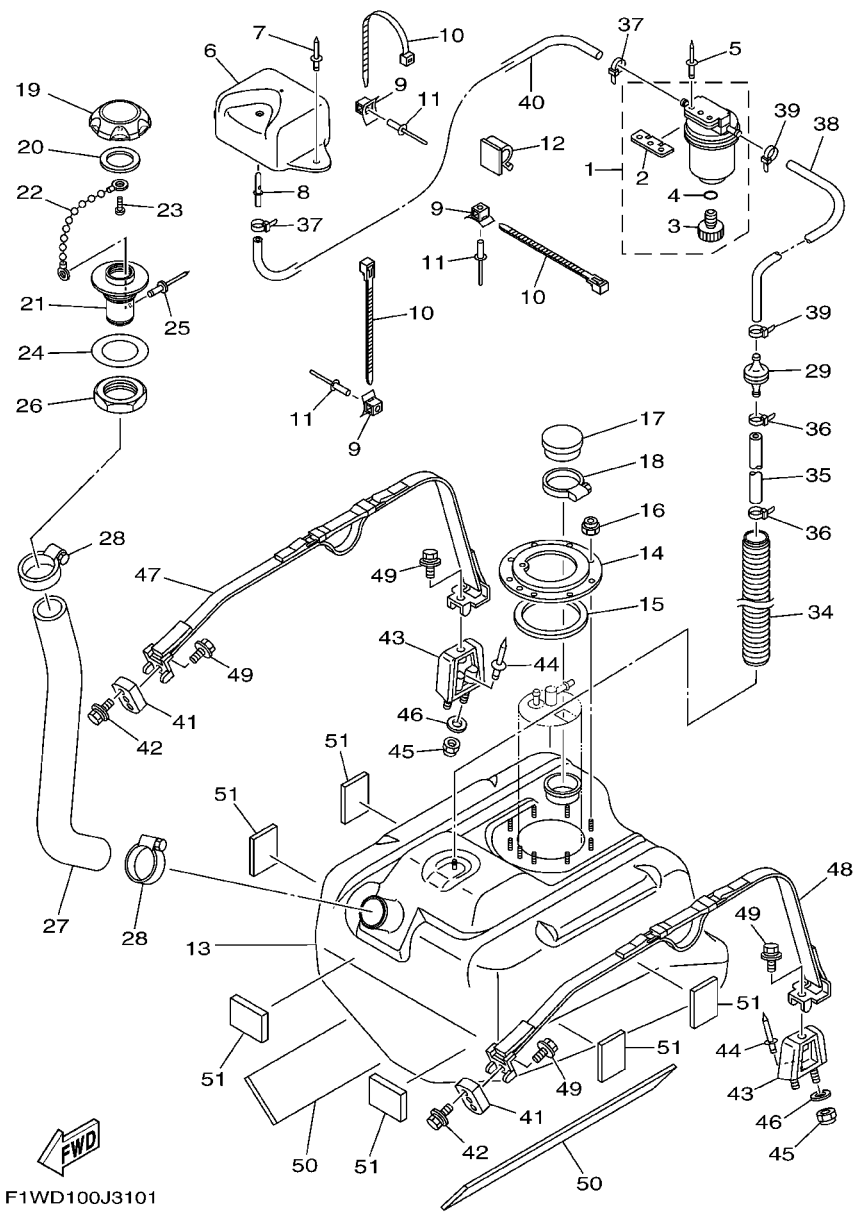

FIG. 31 FUEL TANK

REF. NO.	PART NO.	DESCRIPTION	CAN	EUR	GENE			REMARKS
28	90601–155U4	BAND, HOSE 55	2	2	2			
29	EU0-67767-31	CHECK VALVE	1	1	1			
34	90447–22804	TUBE	1	1	1			
35	F2C–U785H–00	HOSE, AIR VENT 3	1	1	1			
36	90465–11829	CLAMP	2	2	2			
37	90465–11829	CLAMP	2	2	2			
38	F2C–U785G–00	HOSE, AIR VENT	1	1	1			
39	90465–11829	CLAMP	2	2	2			
40	F0D–U7856–10	HOSE, AIR VENT 3	1	1	1			
41	F1X–U2873–00	NUT, SPECIAL	2	2	2			
42	90119–069UH	BOLT, WITH WASHER	4	4	4			
43	F1B–6774J–00	BRKT, BAND	2	2	2			
44	90267–489UE	RIVET, BLIND	2	2	2			
45	9572R–06300	NUT, NYLON	4	4	4			
46	9299R–06200	WASHER	4	4	4			
47	F1B–67743–02	BELT, TANK 1	1	1	1			
48	F1W–67743–00	BELT, TANK 1	1	1	1			
49	90119–089U7	BOLT, WITH WASHER	4	4	4			
50	F1W–U759B–00	MAT 1	2	2	2			
51	F1W–U759C–01	MAT 2	6	6	6			

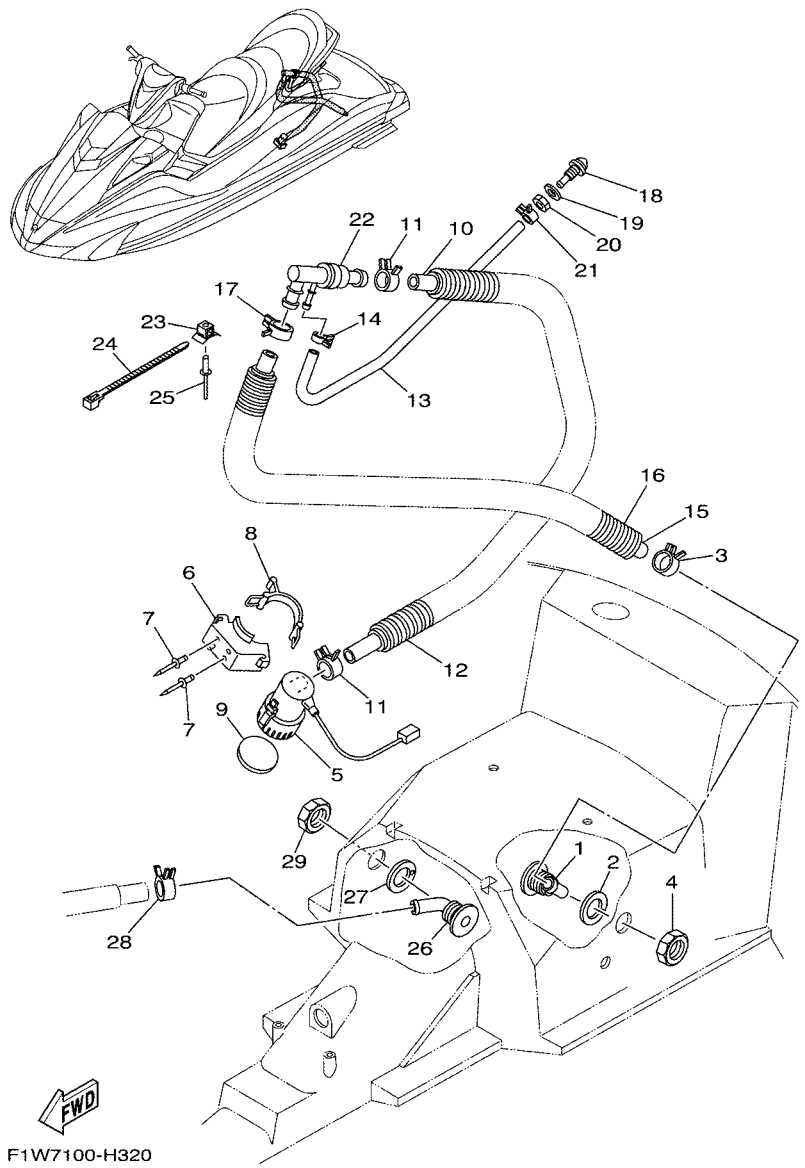

FIG. 32 BILGE PUMP

REF. NO.	PART NO.	DESCRIPTION	CAN	EUR	GENE			REMARKS
1	F1W–U224E–00	BODY, DRAIN 3	1	1	1			
2	F1S–U7525–01	PACKING	1	1	1			
3	90467–26800	CLIP	1	1	1			
4	F1B–62241–00	DRAIN, COCKPIT	1	1	1			
5	F1B–U8360–01	BILGE PUMP ASSY	1	1	1			
6	F1B–U7698–01	BRACKET	1	1	1			
7	90267–489UP	RIVET, BLIND	2	2	2			
8	GA7–68218–00	BAND, BATTERY	1	1	1			
9	F1B–U7656–00	PACKING, BILGE	1	1	1			
10	F1B–U7626–00	HOSE 1	1	1	1			
11	90467–25801	CLIP	2	2	2			
12	90447–28004	HOSE, WITH SPRING (L800)	1	1	1			
13	F1W–U7629–00	HOSE, DRAIN 2	1	1	1			
14	90467–14803	CLIP	1	1	1			
15	F1B–U7628–00	HOSE, DRAIN 3	1	1	1			
16	90447–28004	HOSE, WITH SPRING (L800)	1	1	1			
17	90467–26800	CLIP	1	1	1			
18	GH7–6753B–00	PILOT,WATER	1	1	1			
19	90430–16910	GASKET	1	1	1			
20	GP7–61652–00	NUT	1	1	1			
21	90467–14803	CLIP	1	1	1			
22	F1S–67620–00	HOSE JOINT	1	1	1			
23	F1W–U828M–00	BASE, CLAMP	1	1	1			
24	F2C–U4256–00	CLAMP	1	1	1			
25	90267–489U6	RIVET, BLIND	1	1	1			
26	F1W–U224E–00	BODY, DRAIN 3	1	1	1			
27	F1S–U7525–01	PACKING	1	1	1			

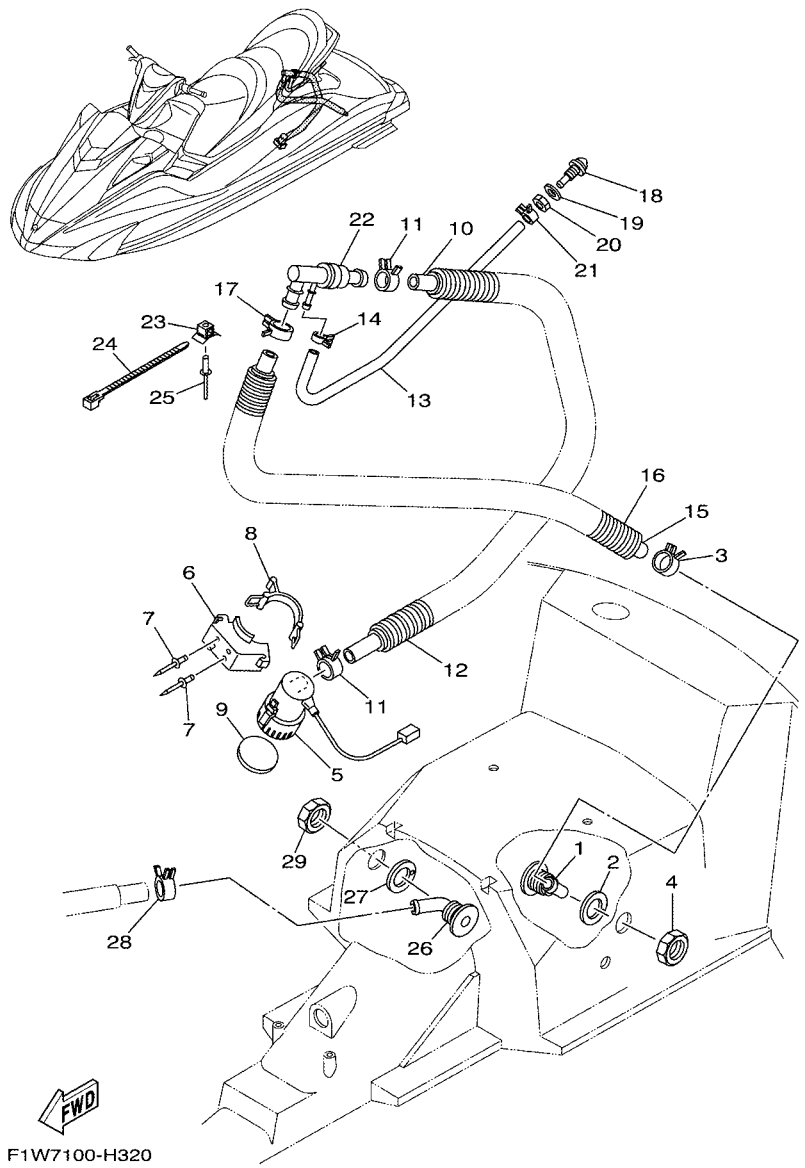

FIG. 32 BILGE PUMP

REF. NO.	PART NO.	DESCRIPTION	CAN	EUR	GENE			REMARKS
28	90467–26800	CLIP	1	1	1			
29	F1B–62241–00	DRAIN, COCKPIT	1	1	1			

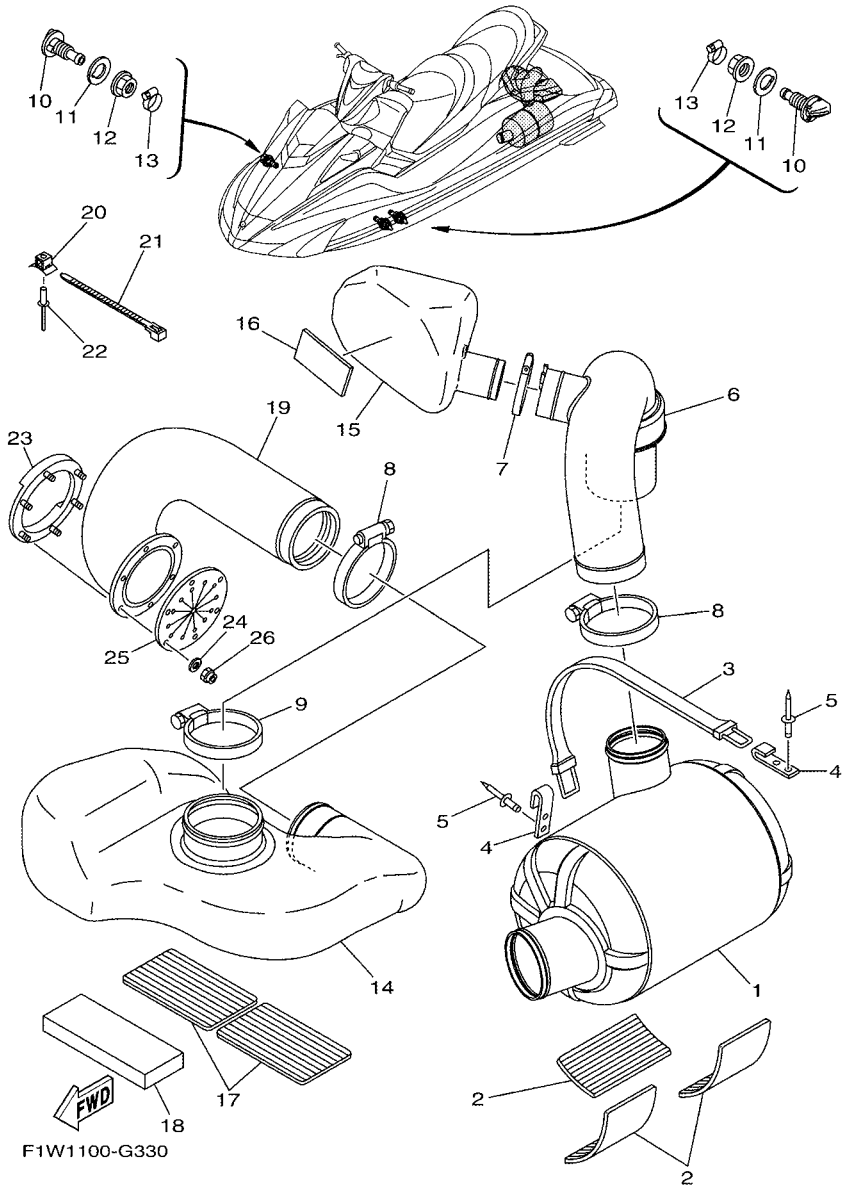

FIG. 33 EXHAUST 3

REF. NO.	PART NO.	DESCRIPTION	CAN	EUR	GENE			REMARKS
1	F1W–U7550–01	WATER LOCK COMP.	1	1	1			
2	F1S–U8221–00	PAD, BATTERY	3	3	3			
3	EW2–67821–00	BAND, FUEL TANK	1	1	1			
4	GA7–65772–00	HOOK A	2	2	2			
5	90267–489U1	RIVET,BLIND	4	4	4			
6	F1W–U7555–00	HOSE, EXHAUST	1	1	1			
7	90601–170UG	BAND, HOSE 70	1	1	1			
8	90450–99801	HOSE CLAMP ASSY	2	2	2			
9	90450–99804	HOSE CLAMP ASSY	1	1	1			
10	F1K–6753B–00	PILOT, WATER	3	3	3			
11	F1B–67564–00	GASKET	3	3	3			
12	F0X–62733–00	NUT	3	3	3			
13	90467–17802	CLIP	3	3	3			
14	F1W–U4261–00	TANK, WATER	1	1	1			
15	F1W–U753C–01	RESONATOR 1	1	1	1			
16	F1K–U759C–00	MAT 2	2	2	2			
17	F1S–U8221–00	PAD, BATTERY	2	2	2			
18	F1W–U8831–01	BED,TANK 1	1	1	1			
19	F1B–U758D–02	HOSE,EXHAUST 3	1	1	1			
20	F1W–U828M–00	BASE, CLAMP	1	1	1			
21	90464–32801	CLAMP	1	1	1			
22	90267–48802	RIVET, BLIND	1	1	1			
23	F1S–U757B–01	PLATE	1	1	1			
24	9299R–06200	WASHER	6	6	6			
25	F1B–U751G–00	VALVE, EXHAUST	1	1	1			
26	9572R–06300	NUT, NYLON	6	6	6			

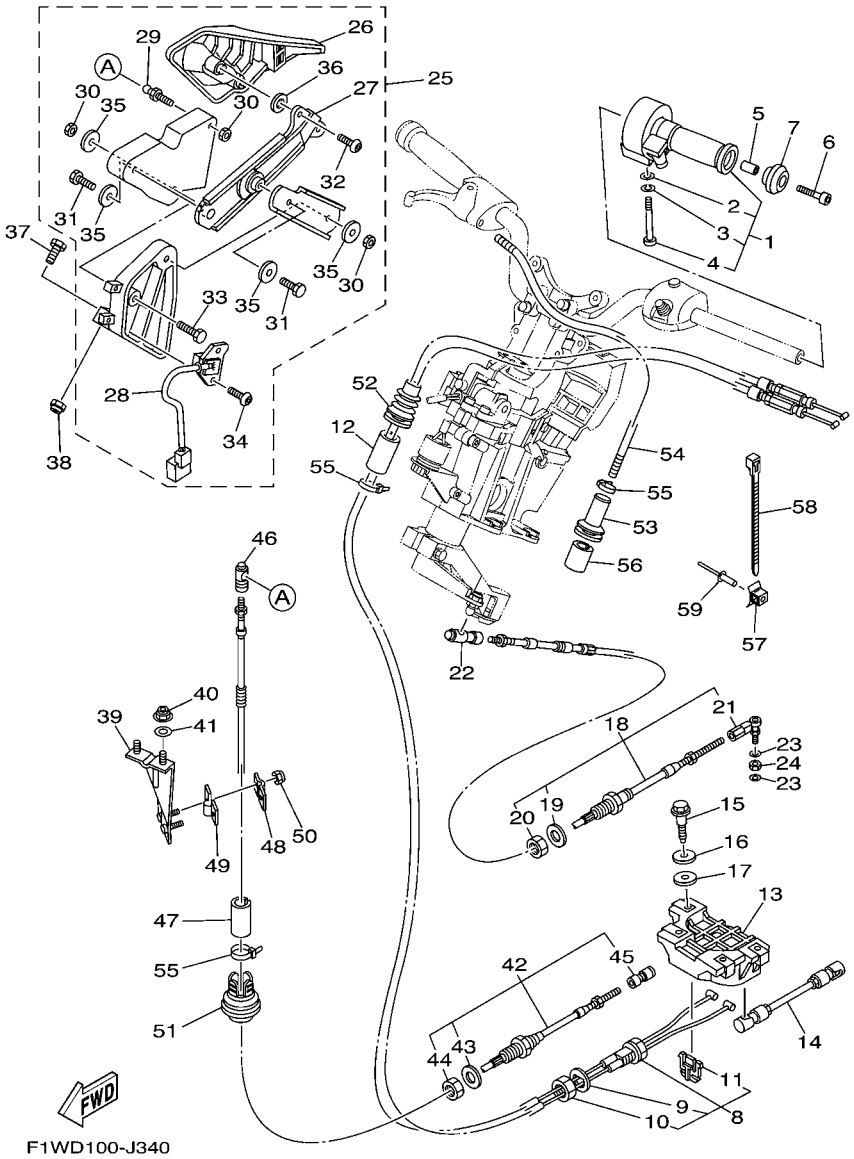

FIG. 34 CONTROL CABLE

REF. NO.	PART NO.	DESCRIPTION	CAN	EUR	GENE			REMARKS
1	F1W–6153A–00	NOZZLE,CONTROL ASSY	1	1	1			
2	92990–06200	.WASHER, PLAIN	1	1	1			
3	92990–06100	.WASHER, SPRING	1	1	1			
4	F1W–613C1–00	.SCREW	1	1	1			
5	90387–05800	COLLAR	1	1	1			
6	90110–05908	BOLT, HEXAGON SOCKET HEAD	1	1	1			
7	F1S–U155F–00	GRIP, END	1	1	1			
8	F1W–6153E–01	CABLE,NOZZLE CONTROL 3	1	1	1			
9	F1W–61438–00	.PACKING	1	1	1			
10	F1B–6151S–00	.NUT	1	1	1			
11	F1W–61557–00	.GUIDE, CABLE	1	1	1			
12	GJ1–U7578–11	PACKING, HOSE 2	1	1	1			
13	F1W–6153J–00	REMOCON,NOZZLE 2	1	1	1			
14	F1W–6150A–00	ROD ASSY	1	1	1			
15	90109–06233	BOLT	4	4	4			
16	90201–099U3	WASHER, PLATE	4	4	4			
17	90202–08002	WASHER, PLATE	4	4	4			
18	F1S–61481–00	CABLE, STEERING	1	1	1			
19	F1B–61438–00	.PACKING	1	1	1			
20	F1B–6151S–00	.NUT	1	1	1			
21	F1B–61461–02	.STUD, JOINT BALL	1	1	1			
22	GK5–U146F–00	SHAFT,JOINT BALL	1	1	1			
23	90201–06906	WASHER, PLATE	2	2	2			
24	9538R–06700	NUT	1	1	1			
25	F1W–6134A–01	REMOCON. LEVER ASSY.	1	1	1			
26	F1W–62714–00	.GRIP	1	1	1			
27	F1W–62289–00	.LEVER	1	1	1			

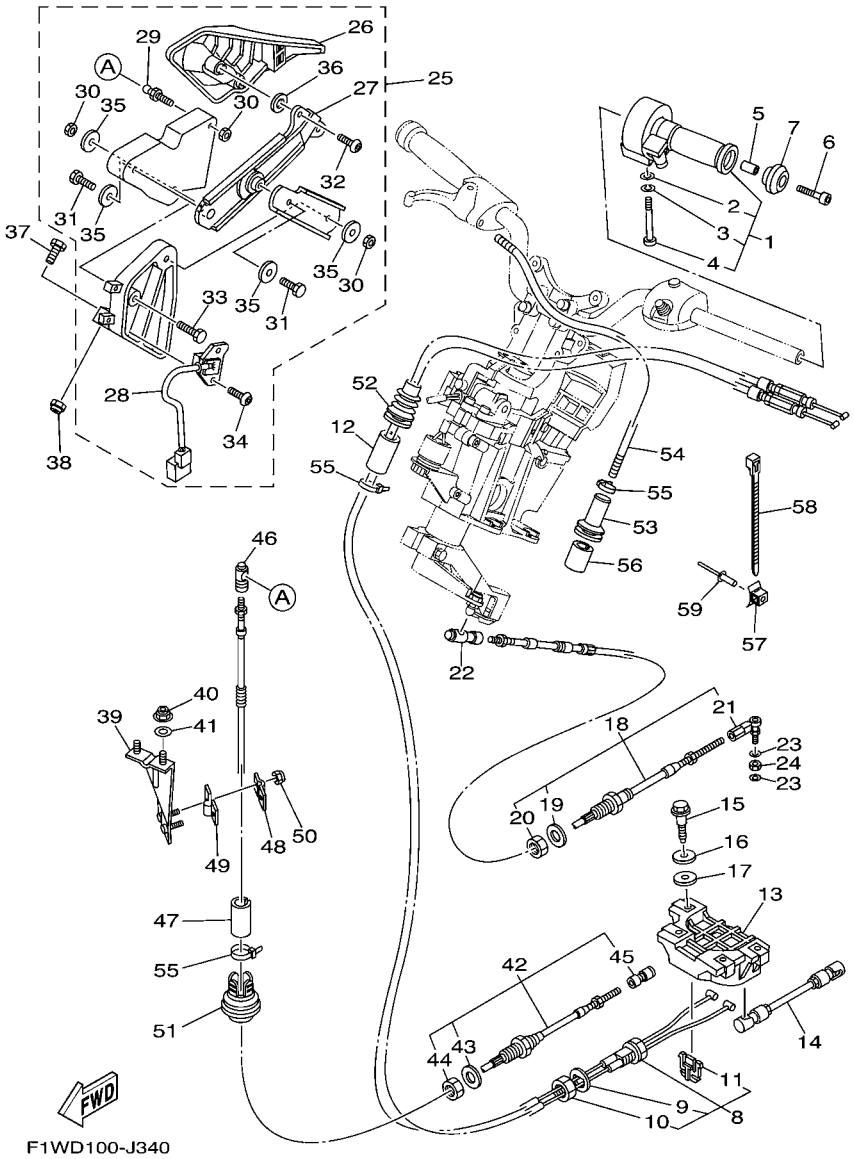

FIG. 34 CONTROL CABLE

REF. NO.	PART NO.	DESCRIPTION	CAN	EUR	GENE			REMARKS
28	F1W–6830K–00	.REVERSE SENSOR ASSY	1	1	1			
29	F1X–61461–00	.STUD, JOINT BALL	1	1	1			
30	95720–06300	.NUT, SELF-LOCKING	3	3	3			
31	F0D–61516–00	.BOLT	2	2	2			
32	F1X–613C1–00	.SCREW	2	2	2			
33	F0D–61355–00	.BOLT	2	2	2			
34	F1B–613C1–00	.SCREW	2	2	2			
35	FJ0–61353–00	.WASHER	4	4	4			
36	F1W–6134E–00	.WASHER	1	1	1			
37	97080–06030	BOLT	3	3	3			
38	90185–06014	NUT, SELF-LOCKING	3	3	3			
39	F1W–U1467–02	BRACKET,STOPPER CABLE	1	1	1			
40	9572R–08300	NUT, FLANGE	2	2	2			
41	9299R–08200	WASHER	2	2	2			
42	F1W–6149C–01	CABLE,REVERSE	1	1	1			
43	F1B–61438–00	.PACKING	1	1	1			
44	F1B–6151S–00	.NUT	1	1	1			
45	F1B–61460–00	.BALL JOINT ASSY	1	1	1			
46	F1B–61460–00	BALL JOINT ASSY	1	1	1			
47	F1W–U146G–00	PACKING, CABLE	1	1	1			
48	GH1–61468–01	STOPPER, CABLE	1	1	1			
49	GU5–6146K–10	HOLDER, STOPPER	1	1	1			
50	9572R–06300	NUT, NYLON	2	2	2			
51	F1W–U1519–00	GROMMET	1	1	1			
52	F0D–6822E–00	GROMMET	1	1	1			
53	GU2–6822E–01	GROMMET	1	1	1			
54	90447–07001	HOSE, WITH SPRING (L400)	1	1	1			

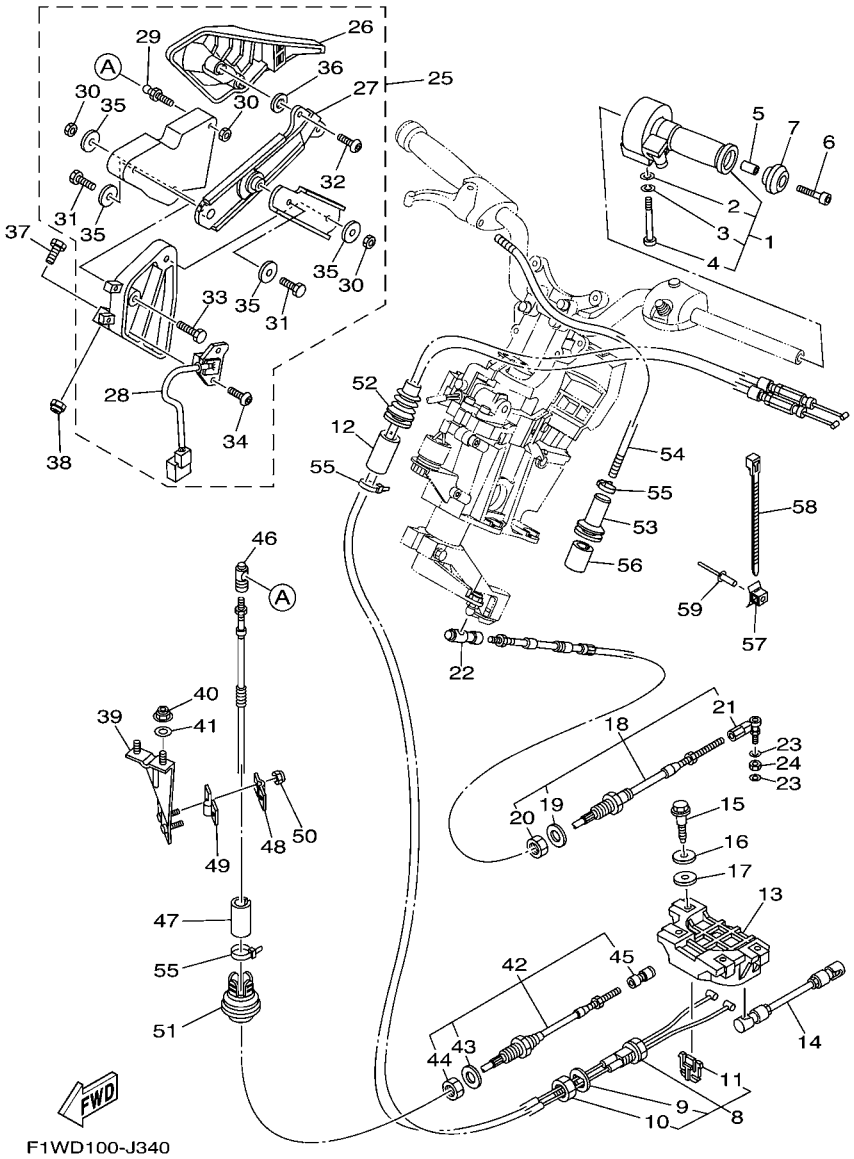

FIG. 34 CONTROL CABLE

REF. NO.	PART NO.	DESCRIPTION	CAN	EUR	GENE			REMARKS
55	90601–200U1	BAND	3	3	3			
56	GJ1–U7578–11	PACKING, HOSE 2	1	1	1			
57	F1W–U828M–00	BASE, CLAMP	1	1	1			
58	90464–32801	CLAMP	1	1	1			
59	90267–48802	RIVET, BLIND	1	1	1			

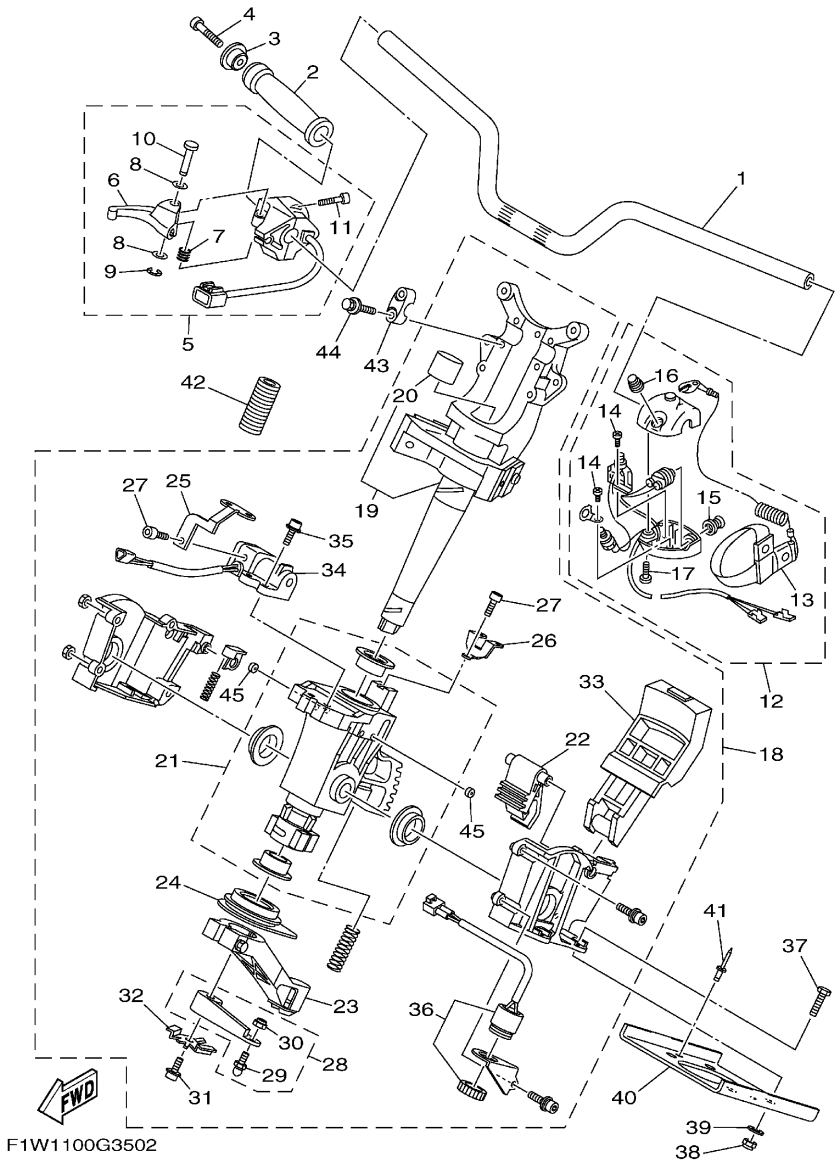

FIG. 35 STEERING 1

REF. NO.	PART NO.	DESCRIPTION	CAN	EUR	GENE			REMARKS
1	F1S–61552–00	HANDLE	1	1	1			
2	GP7–U155D–01	GRIP, HANDLE	1	1	1			
3	F1S–U155F–00	GRIP, END	1	1	1			
4	90110–05908	BOLT, HEXAGON SOCKET HEAD	1	1	1			
5	F1W–67250–01	THROTTLE LEVER ASSY	1	1	1			
6	F0D–67255–02	.LEVER, THROTTLE	1	1	1			
7	EW2–67256–00	.SPRING	1	1	1			
8	EW2–67258–01	.WASHER	2	2	2			
9	EW2–67259–01	.E-RING	1	1	1			
10	F0D–67257–00	.SHAFT	1	1	1			
11	F1X–6725F–01	.BOLT, THROTTLE	2	2	2			
12	F1S–68310–01	SWITCH BOX ASSY	1	1	1			
13	EW2–68348–00	.LANYARD, STOP SWITCH	1	1	1			
14	97880–03008	.SCREW, PAN HEAD	2	2	2			
15	FK7–68312–02	.STOP BUTTON COMP	1	1	1			
16	FK7–68313–02	.START BUTTON COMP.	1	1	1			
17	97880–05025	.SCREW, PAN HEAD	2	2	2			
18	F1W–61400–10	STEERING MASTER ASSY	1	1	1			
19	F1W–67410–10	.SHAFT ASSY	1	1	1			
20	F1W–61435–00	..SEAL, PIPE 30	1	1	1			
21	F1W–6773D–00	.TUBE & BUSHING SET	1	1	1			
22	F1S–61782–00	.LOCK 1	1	1	1			
23	F1S–6146A–00	.CABLE STOPPER ASSY.	1	1	1			
24	F1S–6143C–00	.SEAL, RUBBER	1	1	1			
25	F1W–65938–00	.STAY 1	1	1	1			
26	F1S–65939–00	.STAY 2	1	1	1			
27	F1B–613C1–00	.SCREW	2	2	2			

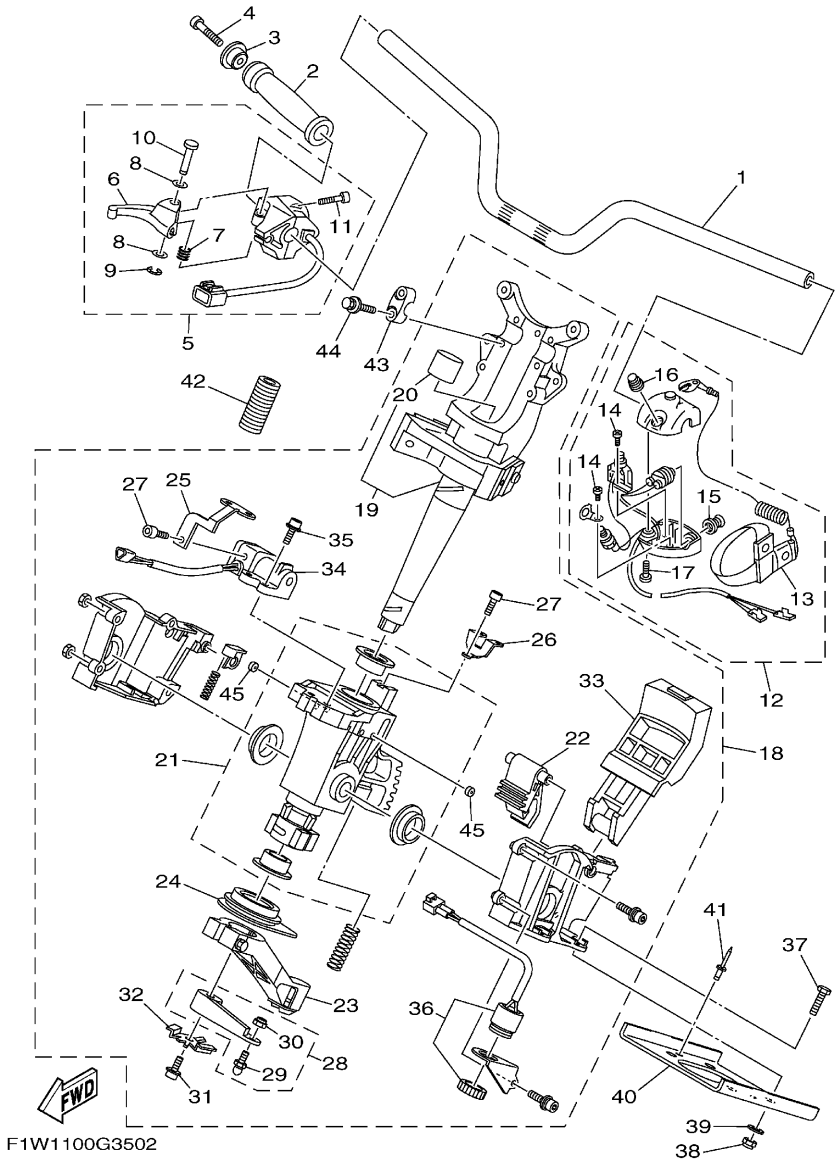

FIG. 35 STEERING 1

REF. NO.	PART NO.	DESCRIPTION	CAN	EUR	GENE			REMARKS
28	F1S–6153R–01	.ARM ASSY.	1	1	1			
29	EU0–61461–02	..STUD, JOINT BALL	1	1	1			
30	95720–06300	..NUT, SELF-LOCKING	1	1	1			
31	F1W–61355–00	.BOLT	1	1	1			
32	F1W–6142B–00	.PLATE, RETAINING	1	1	1			
33	F1W–6151M–00	.LEVER ASSY	1	1	1			
34	F1W–68303–00	.SENSOR ASSY	1	1	1			
35	F1S–61355–00	.BOLT	4	4	4			
36	F1S–68341–00	.BUZZER	1	1	1			
37	97080–08035	BOLT	4	4	4			
38	9572R–08300	NUT, FLANGE	4	4	4			
39	F1W–U725E–00	WASHER	4	4	4			
40	F1X–U1554–00	PLATE, RETAINING	1	1	1			
41	90267–489U6	RIVET, BLIND	2	2	2			
42	90447–22803	TUBE	1	1	1			
43	EU0–23814–30	HOLDER, HANDLE UPPER	2	2	2			
44	90119–089UU	BOLT, WITH WASHER	4	4	4			
45	F1W–6358B-00	.PLUG	4	4	4			

FIG. 36 STEERING 2

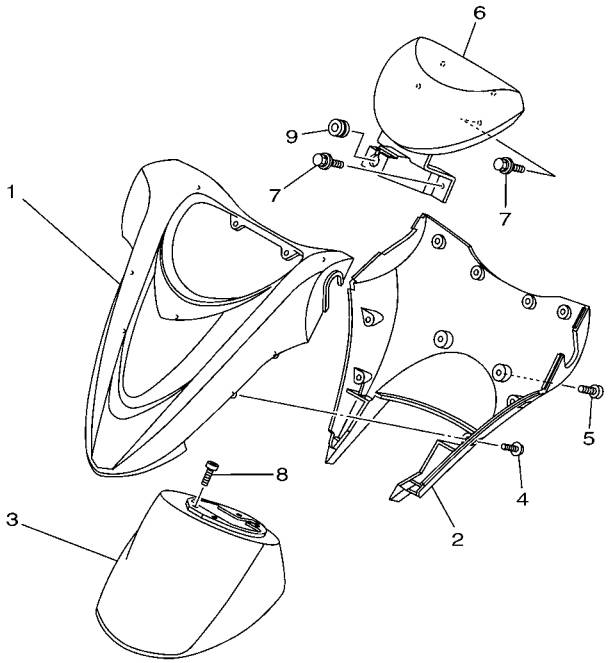

F1W1100-G360

REF. NO.	PART NO.	DESCRIPTION	CAN	EUR	GENE			REMARKS
1	F1S–U142A–01	STEERING PAD COMP	1	1	1			
2	F1S–U143E–00	PAD, STEERING 2	1	1	1			
3	F1S–U143L–02	PAD, STEERING 3	1	1	1			
4	90149–05903	SCREW	8	8	8			
5	90154–06017	SCREW, BINDING	2	2	2			
6	F1S–U142G–01	PAD ASSY.	1	1	1			
7	90119–069UJ	BOLT, WITH WASHER	4	4	4			
8	90154–06030	SCREW, BINDING	4	4	4			
9	90480–18802	GROMMET	1	1	1			

FIG. 37 GRAPHICS

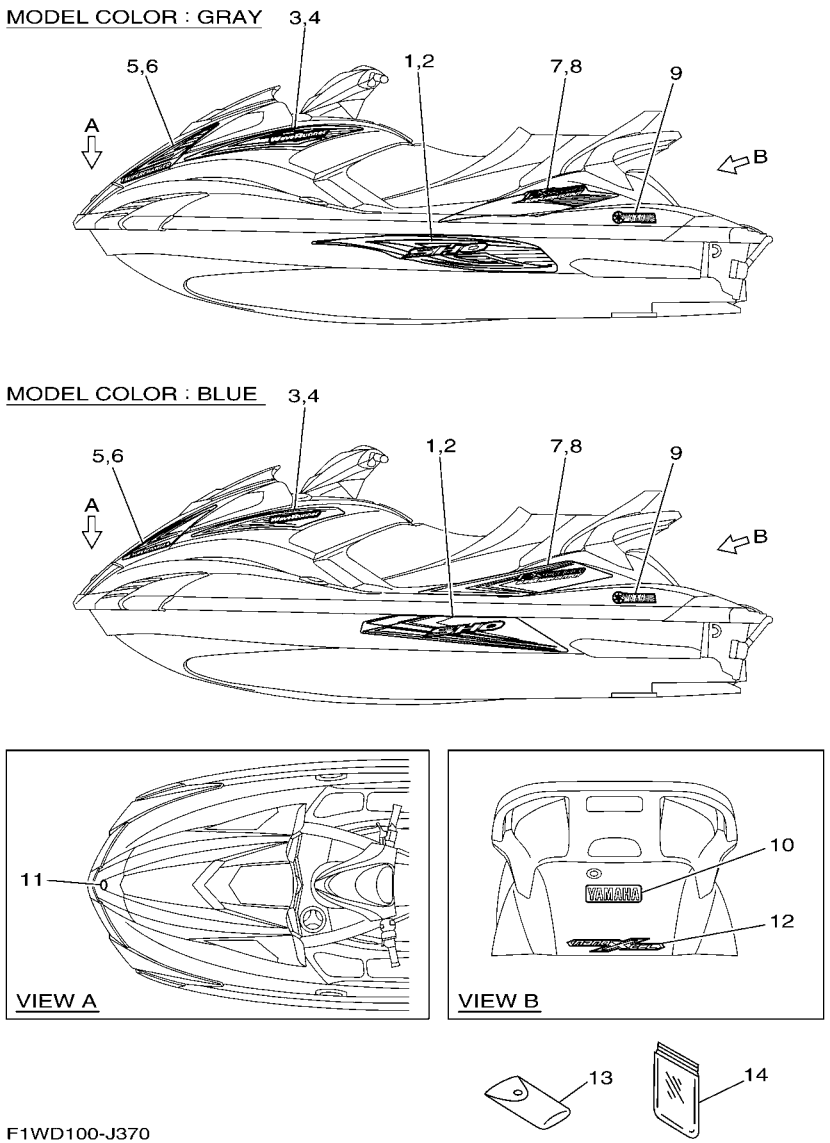

REF. NO.	PART NO.	DESCRIPTION	CAN	EUR	GENE			REMARKS
1	F1W–U417B–80	GRAPHIC 1 (LH)	1	1	1			FOR GRAY
	F1W–U417B–90	GRAPHIC 1 (LH)	1	1	1			FOR BLUE
2	F1W–U417C–80	GRAPHIC 2 (RH)	1	1	1			FOR GRAY
	F1W–U417C–90	GRAPHIC 2 (RH)	1	1	1			FOR BLUE
3	F1W–U417D–80	GRAPHIC 3 (LH)	1	1	1			FOR GRAY
	F1W–U417D–90	GRAPHIC 3 (LH)	1	1	1			FOR BLUE
4	F1W–U417E–80	GRAPHIC 4 (RH)	1	1	1			FOR GRAY
	F1W–U417E–90	GRAPHIC 4 (RH)	1	1	1			FOR BLUE
5	F1W–U417F–80	GRAPHIC 5 (LH)	1	1	1			FOR GRAY
	F1W–U417F–90	GRAPHIC 5 (LH)	1	1	1			FOR BLUE
6	F1W–U417G–80	GRAPHIC 6 (RH)	1	1	1			FOR GRAY
	F1W–U417G–90	GRAPHIC 6 (RH)	1	1	1			FOR BLUE
7	F1W–U417H–80	GRAPHIC 7 (LH)	1	1	1			FOR GRAY
	F1W–U417H–90	GRAPHIC 7 (LH)	1	1	1			FOR BLUE
8	F1W–U417J–80	GRAPHIC 8 (RH)	1	1	1			FOR GRAY
	F1W–U417J–90	GRAPHIC 8 (RH)	1	1	1			FOR BLUE
9	F1X–U411C–60	EMBLEM, YAMAHA	2	2	2			FOR GRAY
	F1W–U411C–20	EMBLEM, YAMAHA	2	2	2			FOR BLUE
10	F1X–U4114–60	MARK, YAMAHA A	1	1	1			FOR GRAY
	F1W–U4114–20	MARK, YAMAHA A	1	1	1			FOR BLUE
11	F1K–U411H–00	EMBLEM, TUNING FORK	1	1	1			
12	F1W–U4121–00	EMBLEM A	1	1	1			
13	F1B–65986–00	TOOL SET	1	1	1			
14	EU0–65901–01	TOOL BAG	1	1	1			

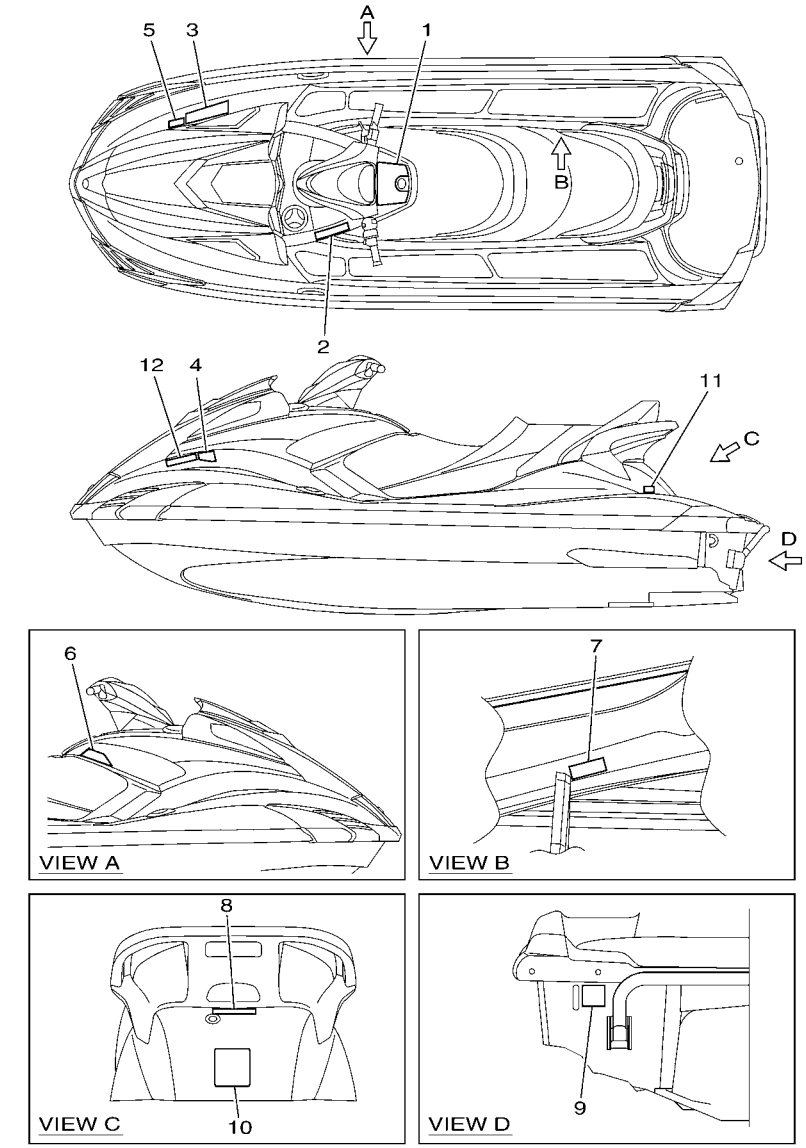

F1W1100-G390

FIG. 38 IMPORTANT LABELS

REF. NO.	PART NO.	DESCRIPTION	CAN	EUR	GENE			REMARKS
1	F1W–U41B1–10	LABEL, WARNING UNIFORM 1	1	1	1			
2	F1B–U41B1–21	LABEL, WARNING UNIFORM 1	1	1	1			
3	F1B–U41B1–31	LABEL, WARNING UNIFORM 1	1	1	1			
4	F1B–U41B2–01	LABEL, WARNING UNIFORM 2	1	1	1			
5	F1S–U415B–11	LABEL, WARNING(FUEL)	1	1	1			
6	F0V–U41D5–31	LABEL, WARNING SHIFT LEVER	1	1	1			
7	F0V–U41DB–12	LABEL, WARNING BATTERY	1	1	1			
8	F1B–U41F5–21	LABEL, FIRE EXTINGUISHER 1	1	1	1			
9	F1G–U418F–00	LABEL, RIGHTING	1	1	1			
10	F1S–U41E1–11	LABEL, SET 1	1	1	1			
11	F1S–U419E–01	LABEL 4	1					FOR CAN
12	GP8–U416H–01	LABEL,WARNING(FRANCE)		1				FOR EUR

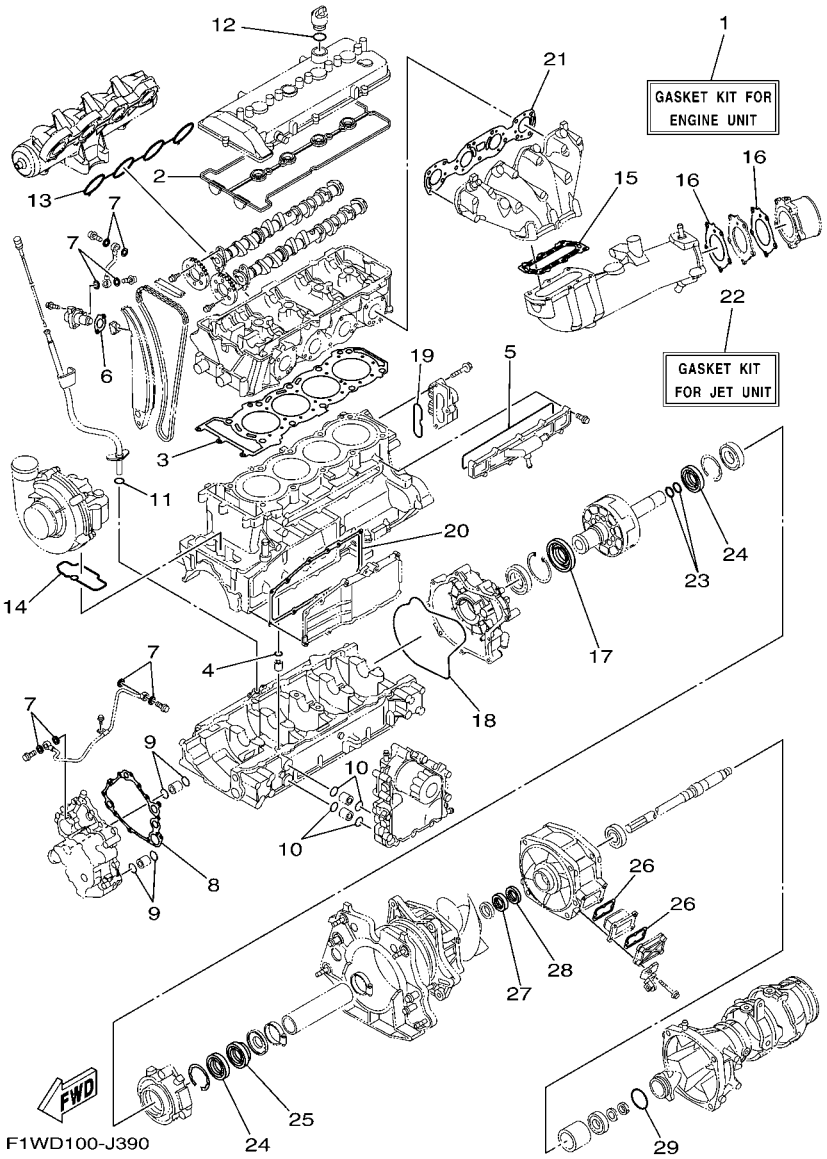

FIG. 39 REPAIR KIT 1

REF. NO.	PART NO.	DESCRIPTION	CAN	EUR	GENE			REMARKS
1	6S5–W0001–02	GASKET KIT FOR ENGINE UNIT	1	1	1			
2	6S5–11193–00	.GASKET, HEAD COVER 1	1	1	1			
3	6S5–11181–00	.GASKET, CYLINDER HEAD 1	1	1	1			
4	93210–11453	.O-RING	1	1	1			
5	6S5–12517–01	.GASKET, WATER INLET	1	1	1			
6	6S5–121E2–00	.GASKET	1	1	1			
7	90430–10007	.GASKET	8	8	8			
8	6S5–13563–00	.GASKET	1	1	1			
9	93210–21631	.O-RING	4	4	4			
10	93210–18322	.O-RING	4	4	4			
11	93210–12790	.O-RING	1	1	1			
12	93210–24M79	.O-RING	1	1	1			
13	6S5–13645–00	.GASKET, MANIFOLD 1	1	1	1			
14	6S5–1416A–00	.O-RING	1	1	1			
15	6S5–14739–00	.GASKET, MUFFLER DAMPER 1	1	1	1			
16	6S5–14749–00	.GASKET, MUFFLER DAMPER 2	2	2	2			
17	6S5–81167–10	.OIL SEAL	1	1	1			
18	6S5–81168–00	.O-RING	1	1	1			
19	93210–60ME8	.O-RING	1	1	1			
20	6S5–13557–00	.GASKET	1	1	1			
21	6S5–14613–00	.GASKET, EXHAUST PIPE	1	1	1			
22	6S5–W0001–20	GASKET KIT FOR JET UNIT	1	1	1			
23	93210–22MF1	.O-RING	2	2	2			
24	93102–29008	.OIL SEAL	2	2	2			
25	93102–29009	.OIL SEAL	1	1	1			
26	66V–42414–00	.O-RING	2	2	2			
27	93102–31009	.OIL SEAL	1	1	1			

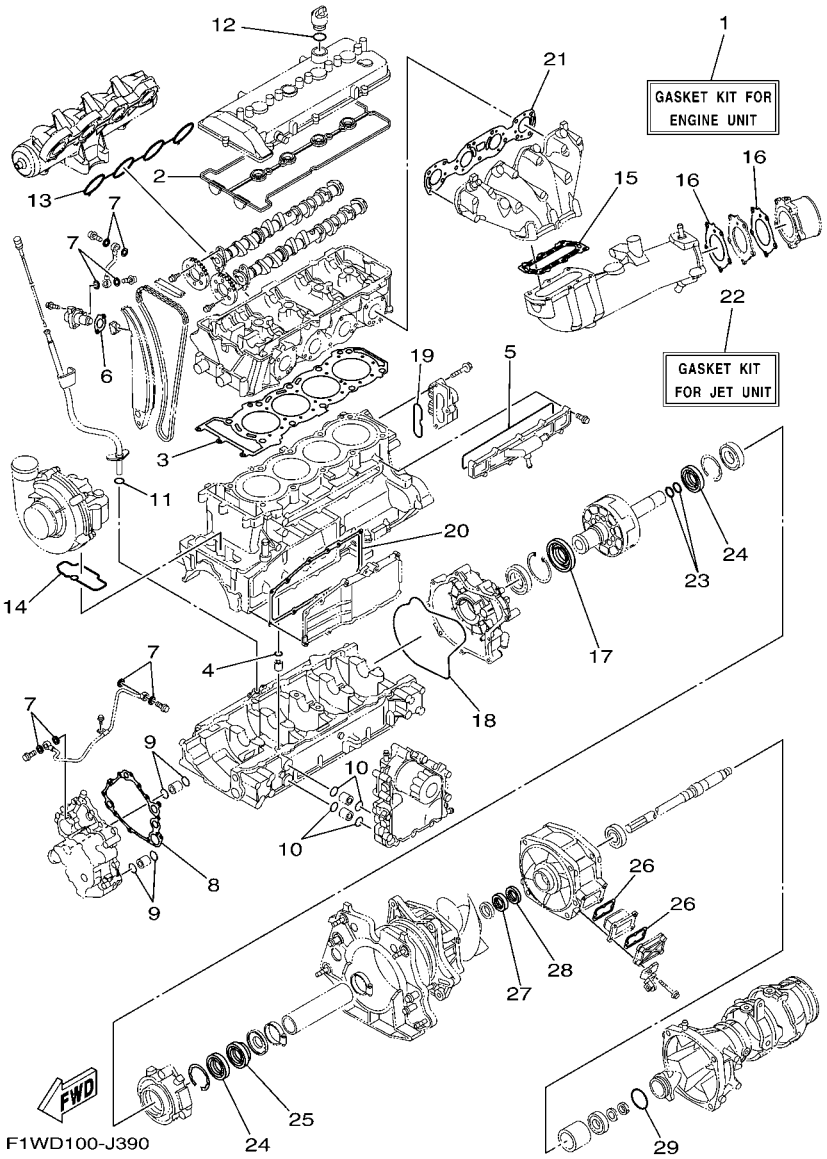

FIG. 39 REPAIR KIT 1

REF. NO.	PART NO.	DESCRIPTION	CAN	EUR	GENE			REMARKS
28	93102–31004	.OIL SEAL	1	1	1			
29	6S5–5111K–00	.O-RING 1	1	1	1			

PART NO.	REF. NO.
6S5–11026–00	1 – 9
6S5–11102–00–94	2 – 2
6S5–11119–00	2 – 12
6S5–1111G–00	1 – 10
6S5–11125–00	12 – 12
6S5–11126–00	3 – 22
6S5–11133–10	2 – 3
6S5–11160–00	12 – 6
6S5–11166–00	12 – 1
6S5–11167–00	12 – 14
6S5–11181–00	2 – 11
	39 – 3
6S5–11191–00–94	1 – 1
6S5–11193–00	1 – 3
	39 – 2
69J–11301–10	3 – 9
6S5–1131M–00–9S	3 – 18
68V–11325–02	3 – 10
67F–11328–00	3 – 11
6S5–11377–00	3 – 16
6S5–11378–00	10 – 15
6S5–11411–00	4 – 1
6S5–11416–00	4 – 2
6S5–11416–10	4 – 2
6S5–11416–20	4 – 2
6S5–11416–30	4 – 2
6S5–11416–40	4 – 2
6S5–11459–01	4 – 15
6S5–11603–00	4 – 4
6S5–11631–10–B0	4 – 3
6S5–11633–00	4 – 5
6S5–11650–00	4 – 7
6S5–11654–00	4 – 8
6S5–11656–00	4 – 10
6S5–11656–10	4 – 10
6S5–11656–20	4 – 10
6S5–11656–30	4 – 10
6S5–11941–00	1 – 8
6S5–12111–00	5 – 5
6S5–12113–00	5 – 8
6S5–12116–00	5 – 7
6S5–12117–00	5 – 9
3LD–12118–00	5 – 10
51Y–12119–00	5 – 11
6S5–12121–00	5 – 6
6S5–12153–00	5 – 13
3LD–12168–00	5 – 12
3LD–12168–20	5 – 12

PART NO.	REF. NO.
3LD–12168–40	5 – 12
3LD–12168–60	5 – 12
3LD–12168–80	5 – 12
3LD–12168–A0	5 – 12
3LD–12168–F0	5 – 12
3LD–12168–H1	5 – 12
3LD–12168–K1	5 – 12
3LD–12168–M1	5 – 12
3LD–12168–R1	5 – 12
3LD–12168–U1	5 – 12
3LD–12168–W1	5 – 12
3LD–12168–Y1	5 – 12
3LD–12169–11	5 – 12
3LD–12169–31	5 – 12
3LD–12169–50	5 – 12
3LD–12169–70	5 – 12
3LD–12169–90	5 – 12
3LD–12169–E0	5 – 12
3LD–12169–G0	5 – 12
3LD–12169–J0	5 – 12
3LD–12169–L0	5 – 12
6S5–12171–00	5 – 1
6D3–12176–00	5 – 3
6S5–12181–00	5 – 2
6S5–121E2–00	5 – 20
	39 – 6
6S5–12210–00	5 – 19
6S5–12215–00	5 – 16
6S5–12228–00	2 – 7
6S5–12241–00	5 – 26
6S5–12251–00	5 – 25
6S5–12252–00	5 – 15
6S5–12279–00	5 – 17
6S5–12289–00	4 – 12
	16 – 12
60E–12411–01	2 – 14
6S5–12413–00–94	2 – 15
6S5–1243E–00	14 – 13
6S5–1243F–00	14 – 18
6S5–12443–00	14 – 10
6S5–1244G–00	14 – 46
6S5–1244H–00	14 – 28
6S5–1244J–00	14 – 24
6S5–12469–01–94	3 – 24
6S5–12517–01	3 – 25
	39 – 5
6S5–12552–00	14 – 37
6S5–12576–00	14 – 50

PART NO.	REF. NO.
6S5–12577–00	14 – 40
6S5–12578–00	2 – 17
6S5–12579–00	14 – 43
63M–12580–00	14 – 5
6S5–12581–00	14 – 4
6S5–12582–00	14 – 22
6S5–12584–00	14 – 17
6S5–12588–00	14 – 31
6S5–12589–00	14 – 26
6S5–12594–00	14 – 49
6S5–12858–00	11 – 2
6S5–12880–00	6 – 4
6S5–1310A–00–94	10 – 1
6BH–1319K–00	3 – 32
6S5–13300–00	9 – 1
6S5–13317–00	10 – 6
6S5–13337–00	3 – 27
6S5–13405–00	10 – 2
6S5–13406–00	10 – 3
6S5–13416–00	9 – 7
6S5–13418–00	5 – 22
69J–13440–01	11 – 1
60E–13446–00	9 – 6
6S5–13446–00	11 – 3
6S5–13470–00	11 – 4
6S5–13476–00	10 – 4
6S5–13477–00	10 – 5
69J–13532–00	6 – 23
6S5–13556–00	11 – 5
8FP–13556–00	6 – 15
6S5–13557–00	3 – 19
	39 – 20
6S5–13563–00	9 – 2
	39 – 8
6S5–13573–00	6 – 8
6P2–13578–00	6 – 6
6P2–13588–00	6 – 5
6S5–13641–00	6 – 2
6S5–13645–00	6 – 26
	39 – 13
6S5–13651–00	7 – 26
6S5–13652–00	7 – 31
6S5–13670–00	7 – 12
6S5–13691–00–94	7 – 13
6S5–13750–00	6 – 1
6S5–13761–00	6 – 13
6S5–13907–00	23 – 1
60E–14147–00	6 – 14

PART NO.	REF. NO.
6S5–14147–00	6 – 3
6S5–14148–00	7 – 25
6S5–14159–00	6 – 25
6S5–1416A–00	7 – 4
	39 – 14
6S5–14199–00	7 – 3
6S5–141A0–02	7 – 1
6S5–14243–00	7 – 19
6S5–14285–00	6 – 18
6S5–14291–00	6 – 21
6S5–14294–02	6 – 27
6D3–14305–21	22 – 1
6S5–14349–00	7 – 10
6S5–14360–00	6 – 12
6S5–14413–00–94	6 – 34
6S5–14435–00	7 – 18
6S5–14445–00	6 – 20
63P–14446–00	6 – 7
6S5–14446–00	6 – 24
6D3–1444B–00	6 – 16
6D3–14457–00	6 – 19
6D3–14495–00	7 – 28
	8 – 2
	22 – 11
6S5–14495–00	7 – 17
6S5–14496–00	6 – 10
6S5–14534–00	6 – 22
6S5–14536–00	6 – 11
6S5–14613–00	13 – 1
	39 – 21
6S5–1469W–00	13 – 15
6S5–14711–00–94	13 – 2
6S5–14721–00–94	13 – 6
6S5–14739–00	13 – 7
	39 – 15
6S5–14749–00	13 – 14
	39 – 16
6S5–14752–00	13 – 19
6S5–1475A–00	13 – 20
6S5–14771–00–94	13 – 11
6S5–14784–00–94	13 – 16
6S5–14987–00	14 – 34
6S5–15100–01–94	3 – 1
6S5–15362–00	3 – 30
6S5–15363–00	1 – 11
6S5–15486–00	10 – 7
5EL–15511–00	20 – 6
6S5–15515–00	19 – 3

PART NO.	REF. NO.
6S5–15517–00	19 – 5
6S5–15521–00	19 – 4
6S5–15590–00	19 – 1
6S5–15657–00	4 – 18
6S5–17031–00	4 – 23
6S5–17525–01	4 – 14
6S5–17529–00	4 – 25
6S5–17553–00	4 – 28
6S5–17572–01	4 – 11
6S5–17648–00	4 – 19
6S5–17658–00	4 – 20
6S5–17800–00	4 – 16
EU0–23814–30	35 – 43
6S5–24300–01	6 – 28
70R–24489–00	31 – 4
70R–24543–00	31 – 3
6S5–26311–10	22 – 2
67F–2812A–00	21 – 25
6S5–41661–00–94	24 – 4
6S5–41662–00–94	24 – 5
66V–42414–00	15 – 9
	39 – 26
67X–44517–10–94	24 – 1
663–45119–00	14 – 53
66V–45214–00–94	15 – 10
6S5–45241–00	17 – 11
6S5–45332–00–94	16 – 4
61L–45378–00	16 – 10
6S5–45511–00	15 – 17
6S5–45538–00	15 – 13
6S5–45593–00–94	16 – 11
6S5–45613–10	16 – 9
6S5–45813–01–94	4 – 13
6S5–4581J–01	16 – 1
66V–46882–00	15 – 8
6S5–5111K–00	15 – 21
	39 – 29
68N–5112T–00	27 – 3
60T–51190–00–94	15 – 39
66V–51312–01–94	15 – 4
6S5–51315–00–94	15 – 7
6S5–51318–00–94	15 – 25
6S5–51323–00	16 – 2
6S5–51326–00–94	15 – 20
63M–51334–00	15 – 26
60E–51341–00–94	19 – 22
6S5–51341–00–94	17 – 1
6B6–51342–00	15 – 45

PART NO.	REF. NO.
61L–5169A–00	14 – 52
6S5–52358–00	17 – 10
F1B–60210–00	25 – 42
F1W–6134A–01	34 – 25
F1W–6134E–00	34 – 36
FJ0–61353–00	34 – 35
F0D–61355–00	34 – 33
F1S–61355–00	35 – 35
F1W–61355–00	35 – 31
F1B–613C1–00	34 – 34
	35 – 27
F1W–613C1–00	34 – 4
F1X–613C1–00	34 – 32
F1W–61400–10	35 – 18
F1W–6142B–00	35 – 32
F1W–61435–00	35 – 20
F1B–61438–00	34 – 19
	34 – 43
F1W–61438–00	34 – 9
F1S–6143C–00	35 – 24
F1B–61460–00	34 – 45
	34 – 46
F1X–61461–00	34 – 29
EU0–61461–02	35 – 29
F1B–61461–02	34 – 21
GH1–61468–01	34 – 48
F1S–6146A–00	35 – 23
GU5–6146K–10	34 – 49
F1S–61481–00	34 – 18
F1W–6149C–01	34 – 42
F1W–6150A–00	34 – 14
F0D–61516–00	34 – 31
F1W–6151M–00	35 – 33
F1B–6151S–00	34 – 10
	34 – 20
	34 – 44
F1W–6153A–00	34 – 1
F1W–6153E–01	34 – 8
F1W–6153J–00	34 – 13
F1S–6153R–01	35 – 28
F1S–61552–00	35 – 1
F1W–61557–00	34 – 11
F1K–61624–00	27 – 24
F1K–61628–00	30 – 13
F0X–61637–00	27 – 27
EU0–61652–00	14 – 12
	27 – 8
F0X–61652–00	27 – 28

PART NO.	REF. NO.
GP7–61652–00	32 – 20
F1S–61782–00	35 – 22
EW2–62142–00	31 – 2
F1G–62149–00	31 – 8
F2F–6214A–00	31 – 1
F1B–62150–00	31 – 29
GJ3–6215F–00	23 – 14
F1B–62241–00	32 – 4
	32 – 29
F1W–62289–00	34 – 27
F1W–62714–00	34 – 26
F0X–62733–00	33 – 12
F1W–6273B–02	18 – 14
F1X–62875–00	25 – 41
F0X–6375E–00	30 – 26
F0X–6378C–00	30 – 22
GU2–6378D–02	30 – 18
F1W–6514S–00	26 – 22
F1W–6514T–00	26 – 23
F1W–6517C–02	26 – 34
F1B–6517R–00	25 – 43
F1W–6517R–00	26 – 37
GA7–65772–00	33 – 4
EU0–65901–01	37 – 14
F1W–65938–00	35 – 25
F1S–65939–00	35 – 26
F1B–65986–00	37 – 13
F1W–67250–01	35 – 5
F0D–67255–02	35 – 6
EW2–67256–00	35 – 7
F0D–67257–00	35 – 10
EW2–67258–01	35 – 8
EW2–67259–01	35 – 9
F1X–6725F–01	35 – 11
F1W–67410–10	35 – 19
F1K–6753B–00	33 – 10
GH7–6753B–00	32 – 18
F1B–67557–00	18 – 21
F1B–67564–00	33 – 11
F1S–67620–00	32 – 22
FN8–6771K–00	31 – 17
F1W–6773D–00	35 – 21
F1W–67743–00	31 – 48
F1B–67743–02	31 – 47
F1B–67747–00	31 – 15
F1B–6774J–00	31 – 43
FJ0–67766–00	31 – 31
F1B–67767–00	31 – 30

PART NO.	REF. NO.
EW2–67821–00	33 – 3
F1X–68090–00	23 – 17
F1X–68090–10	23 – 18
F1W–6820A–01	23 – 16
GA7–68218–00	32 – 8
F1B–6821G–01	23 – 6
F0D–6822E–00	34 – 52
GU2–6822E–01	34 – 53
6S5–682E0–00	23 – 2
F1W–68303–00	35 – 34
F1W–6830K–00	34 – 28
F1S–68310–01	35 – 12
FK7–68312–02	35 – 15
FK7–68313–02	35 – 16
F1S–68341–00	35 – 36
EW2–68348–00	35 – 13
6S5–81167–10	19 – 13
	39 – 17
6S5–81168–00	19 – 17
	39 – 18
6S5–81315–00	22 – 27
6S5–81328–00	19 – 18
66V–8132W–00	21 – 23
6S5–81337–00–94	19 – 11
6S5–81410–00	19 – 7
6S5–81450–01	19 – 6
6S5–81800–00	20 – 1
6S5–81810–00	20 – 13
6S5–81820–00	20 – 12
6S5–81826–00	20 – 10
6S5–81830–00	20 – 3
6S5–81840–00	20 – 8
11H–81844–00	20 – 2
4G0–81844–00	20 – 4
66V–81844–00	21 – 24
5EL–81845–00	20 – 11
6S5–81845–00	21 – 2
3TB–81847–00	20 – 9
1J7–81847–60	20 – 5
5A8–81850–10	20 – 14
6D3–81921–00	21 – 11
6B6–81940–00	21 – 22
6S5–81942–00	21 – 3
60E–81950–00	21 – 20
68V–81950–00	21 – 21
6S5–81960–00	22 – 6
6S5–81972–01–94	22 – 8
6S5–81975–00	22 – 7

PART NO.	REF. NO.
EU0–82110–09	23 – 4
6S5–82115–00	21 – 12
6S5–82116–00	23 – 25
6S5–82117–00	21 – 13
67F–82151–00	21 – 15
67F–82151–10	21 – 16
67F–82151–30	21 – 17
67F–82151–40	21 – 18
	21 – 19
6D3–82157–00	21 – 14
6S5–82170–00	21 – 10
6S5–82310–00	22 – 14
61N–82317–00	12 – 9
6A0–82317–00	21 – 8
6S5–82380–00	6 – 9
68V–82504–00	22 – 26
60E–82556–00	23 – 3
60E–82560–01	22 – 21
1UA–82591–00	26 – 24
6S5–8259E–00	21 – 27
6S5–8259L–02	21 – 29
6D3–8273J–01	22 – 30
6B6–83623–00	21 – 4
60E–83627–00	21 – 5
682–84385–01	14 – 11
6BH–85516–00	3 – 33
6S5–8572F–10	3 – 31
6P2–85780–00	22 – 28
61A–85790–00	22 – 19
6AA–85790–00	22 – 33
6S5–85886–00	6 – 17
6D3–85896–00	22 – 24
6S5–8591A–01	21 – 6
6S5–8591A–11	21 – 6
6B6–86261–00	23 – 26
6B6–86261–10	23 – 26
6B6–86265–00	23 – 27
6B6–86265–10	23 – 27
6S5–E110M–00	1 – 4
6S5–E118E–00	1 – 6
6S5–E1328–00	1 – 5
67X–E2590–10	14 – 56
6S5–E4410–01	8 – 5
6S5–E4419–00	8 – 11
6S5–E4436–00	8 – 7
6S5–E4451–00	8 – 6
6S5–G2717–00	8 – 8
6BH–G4532–00	24 – 2

PART NO.	REF. NO.
6BH–G4574–00	24 – 3
6S5–G5831–02	15 – 1
6S5–R1142–00	8 – 12
6S5–R1313–01	15 – 36
6S5–R1314–00	17 – 3
6S5–R1321–03	15 – 23
6S5–R1333–02	18 – 1
6B6–R1343–00	15 – 27
6S5–R1348–00	15 – 24
6S5–R1381–01	16 – 17
F1S–U142A–01	36 – 1
F1S–U142G–01	36 – 6
F1S–U143E–00	36 – 2
F1S–U143L–02	36 – 3
EU0–U1461–02	17 – 14
F1W–U1467–02	34 – 39
GH3–U146E–00	15 – 40
GK5–U146F–00	34 – 22
F1W–U146G–00	34 – 47
F1W–U1519–00	34 – 51
F2C–U151S–00	18 – 3
F1X–U1554–00	35 – 40
GP7–U155D–01	35 – 2
F1S–U155F–00	34 – 7
	35 – 3
F1B–U1629–00	30 – 45
F1X–U163A–01	27 – 55
F1B–U1653–01	30 – 16
F1W–U2127–01	29 – 3
F1W–U213B–01	26 – 4
F0X–U213G–01	29 – 5
F1X–U2157–00	27 – 58
F1W–U2159–00	31 – 6
F1W–U2187–00	29 – 1
F1W–U2188–00	29 – 2
F1W–U224E–00	32 – 1
	32 – 26
F1S–U2280–00	27 – 35
F1X–U2284–00	27 – 61
F1S–U2285–00	27 – 36
F1W–U2501–11	28 – 1
F1W–U250B–00	28 – 9
	28 – 15
F1B–U2512–00	28 – 4
F1B–U2519–10	28 – 5
F1W–U251C–00	30 – 6
F1W–U251D–11	28 – 22
F1W–U251E–11	28 – 24

PART NO.	REF. NO.
F1W–U251L–01	28 – 23
F1W–U251M–01	28 – 25
F1W–U252E–10	28 – 7
F1W–U252F–10	28 – 13
F1B–U2624–00	30 – 29
F1W–U2624–00	27 – 59
F1K–U2663–00	26 – 8
F1W–U2664–01	30 – 3
F1K–U266B–00	26 – 3
F1W–U266C–00	26 – 16
F1W–U266D–00	30 – 10
F0X–U266E–01	30 – 37
F1W–U2693–00	26 – 39
F1W–U2698–00	25 – 15
F1W–U269B–00	27 – 7
F1W–U271B–01	30 – 32
F1W–U278A–01	27 – 40
F2H–U278F–00	27 – 42
F2H–U278G–00	27 – 44
F2H–U278H–00	27 – 43
	27 – 45
F2H–U278K–00	27 – 46
F2H–U278L–00	27 – 47
F1X–U2873–00	31 – 41
F1W–U351H–00	28 – 29
F1W–U351J–00	28 – 30
F1W–U351K–00	28 – 31
F1W–U351M–00	28 – 32
F1W–U351N–00	28 – 33
F1W–U351P–00	28 – 34
F1W–U351R–00	28 – 35
F1W–U351S–00	28 – 36
F1W–U3581–00	28 – 28
F1W–U371A–20	30 – 1
F1W–U371B–20	30 – 2
F1W–U372A–20	30 – 8
F1W–U372B–20	30 – 9
F1W–U3768–01	26 – 5
F1B–U3774–00	30 – 25
GH1–U3774–00	30 – 46
F1W–U377B–10–P0	25 – 24
F1W–U377B–30–P1	25 – 24
F1W–U377C–10–P0	25 – 28
F1W–U377C–30–P1	25 – 28
F1W–U377F–01	25 – 32
F1W–U377G–01	25 – 36
F1X–U3844–01	25 – 9
F1B–U3850–02	30 – 4

PART NO.	REF. NO.
F1B–U3850–02	30 – 11
F1W–U4114–20	37 – 10
F1X–U4114–60	37 – 10
F1W–U411C–20	37 – 9
F1X–U411C–60	37 – 9
F1K–U411H–00	37 – 11
F1W–U4121–00	37 – 12
F1S–U415B–11	38 – 5
GP8–U416H–01	38 – 12
F1W–U417B–80	37 – 1
F1W–U417B–90	37 – 1
F1W–U417C–80	37 – 2
F1W–U417C–90	37 – 2
F1W–U417D–80	37 – 3
F1W–U417D–90	37 – 3
F1W–U417E–80	37 – 4
F1W–U417E–90	37 – 4
F1W–U417F–80	37 – 5
F1W–U417F–90	37 – 5
F1W–U417G–80	37 – 6
F1W–U417G–90	37 – 6
F1W–U417H–80	37 – 7
F1W–U417H–90	37 – 7
F1W–U417J–80	37 – 8
F1W–U417J–90	37 – 8
F1G–U418F–00	38 – 9
F1S–U419E–01	38 – 11
F1W–U41B1–10	38 – 1
F1B–U41B1–21	38 – 2
F1B–U41B1–31	38 – 3
F1B–U41B2–01	38 – 4
F0V–U41D5–31	38 – 6
F0V–U41DB–12	38 – 7
F1S–U41E1–11	38 – 10
F1B–U41F5–21	38 – 8
F2C–U4256–00	32 – 24
F1W–U4261–00	33 – 14
F1B–U4742–01	30 – 36
F1W–U475B–04	26 – 15
F1W–U475F–01	26 – 18
F1W–U491K–00	28 – 8
	28 – 14
F1W–U4949–00	28 – 11
	28 – 17
GP7–U4953–10	30 – 15
	30 – 43
	30 – 44
F1W–U5136–00	26 – 2

PART NO.	REF. NO.
F1W–U513M–10–P0	26 – 42
F1W–U513M–30–P1	26 – 42
F1W–U5148–00	26 – 11
F0X–U515E–01	25 – 8
F1W–U515H–00	26 – 38
F1W–U515N–10–P0	26 – 13
F1W–U515P–30	26 – 36
F1W–U517B–10–P0	26 – 1
F1W–U517B–30–P1	26 – 1
F1W–U517D–01	26 – 21
F1X–U517E–01	25 – 6
	25 – 26
	25 – 30
F1W–U517F–00	25 – 1
F1W–U517H–01	25 – 40
F1W–U518D–00	25 – 10
F1W–U518E–02	26 – 28
F1W–U519D–01	25 – 44
F1X–U5372–00	25 – 16
F1W–U5508–02	25 – 3
F1W–U5508–22	25 – 3
F1W–U555B–00	25 – 14
F1W–U555D–02	25 – 20
F1W–U590D–F1	26 – 44
F1W–U590E–F1	26 – 46
EW2–U5912–01	30 – 39
EW2–U5913–01	30 – 40
F1W–U591A–00	25 – 45
F1W–U591C–00	25 – 46
F1W–U591D–00	25 – 47
F0X–U5983–01	30 – 38
GD0–U7249–00–05	16 – 19
F1W–U7254–00	22 – 3
F1W–U725E–00	35 – 39
F1S–U725E–01	18 – 12
F1W–U72C0–01	15 – 46
F1W–U732B–00	24 – 12
EU0–U7354–00–01	24 – 9
EU0–U7354–00–03	24 – 9
EU0–U7354–00–05	24 – 9
EU0–U7354–00–10	24 – 9
EU0–U7354–00–20	24 – 9
F1B–U751G–00	33 – 25
F1S–U7525–01	32 – 2
	32 – 27
F1W–U753C–01	33 – 15
F1W–U7550–01	33 – 1
F1W–U7555–00	33 – 6

PART NO.	REF. NO.
GJ1–U7578–11	34 – 12
	34 – 56
F1S–U757B–01	33 – 23
F1X–U757E–00	18 – 25
F1X–U757F–00	18 – 26
F1B–U758D–02	33 – 19
F1W–U759B–00	31 – 50
F1K–U759C–00	33 – 16
F1W–U759C–01	31 – 51
F1B–U761D–02	27 – 10
F1B–U7626–00	32 – 10
F1B–U7628–00	32 – 15
F1W–U7629–00	32 – 13
F1B–U7656–00	32 – 9
F1B–U7698–01	32 – 6
F1W–U7711–01	31 – 13
F1W–U771H–00	27 – 41
F1B–U7773–00	31 – 14
F2N–U7831–10	31 – 19
GP7–U7832–01	31 – 20
GP7–U7833–11	31 – 21
GP7–U7834–10	31 – 24
GP7–U7835–00	31 – 22
GP7–U783F–00	31 – 26
F1W–U7844–00	31 – 27
F0D–U7856–10	31 – 40
F2C–U785G–00	31 – 38
F0D–U785G–10	23 – 12
F2C–U785H–00	31 – 35
F2N–U8169–00	27 – 34
GP7–U8211–00	23 – 5
EU0–U821D–00	23 – 11
F1S–U8221–00	23 – 7
	33 – 2
	33 – 17
EU0–U8221–30	23 – 8
F1X–U822E–00	23 – 19
F1W–U8262–10–P0	25 – 22
F1W–U826C–00	23 – 21
F1K–U826C–03	27 – 50
F1X–U826C–10	27 – 57
F1X–U826D–00	27 – 56
F1X–U828E–01	25 – 4
F1S–U828H–01	27 – 20
F1W–U828M–00	18 – 6
	27 – 21
	29 – 8
	31 – 9

PART NO.	REF. NO.
F1W–U828M–00	32 – 23
	33 – 20
	34 – 57
F1B–U8360–01	32 – 5
F1W–U8376–00	23 – 23
F1G–U8571–01	18 – 19
F1B–U8572–01	18 – 16
F1W–U8572–01	27 – 49
F1K–U8577–01	18 – 17
F1W–U8831–01	33 – 18
F2C–U883B–00	16 – 20
F1W–U883E–00	16 – 21
F1S–U883N–01	27 – 30
F1S–U883P–01	27 – 31
F1X–U883T–01	27 – 32
F1B–U8952–01	30 – 17
F1X–U8K22–01	27 – 15
F1X–U8K31–02	18 – 2
6S5–W0001–02	39 – 1
6S5–W0001–20	39 – 22
6S5–W009A–00–94	2 – 1
6S5–W009B–00–94	3 – 4
6S5–W1783–10	4 – 24
90101–05800	25 – 2
90101–069U0	30 – 21
90105–05020	7 – 2
90105–06028	1 – 2
90105–06035	2 – 16
90105–06903	22 – 15
90105–06M07	3 – 12
90105–06M16	11 – 8
90105–06M24	11 – 7
90105–07004	5 – 4
90105–07009	2 – 6
90105–08169	11 – 9
90105–08170	11 – 10
90105–08188	7 – 8
90105–08860	27 – 33
90105–10071	3 – 5
90109–06218	26 – 25
	26 – 32
90109–06233	34 – 15
90109–06268	3 – 36
90109–06832	16 – 22
90109–06874	24 – 10
90109–06875	24 – 11
90109–08041	18 – 24
90110–05908	34 – 6

PART NO.	REF. NO.
90110–05908	35 – 4
90110–06040	27 – 29
90110–06182	3 – 28
90110–06822	15 – 22
90110–06823	25 – 33
	25 – 37
90110–08212	19 – 2
90111–06114	28 – 19
90116–08032	6 – 32
90116–10044	7 – 20
90119–05803	25 – 13
90119–059U4	26 – 35
90119–06048	22 – 10
	22 – 32
90119–06827	18 – 28
90119–06832	23 – 10
90119–06880	25 – 11
	25 – 25
	25 – 27
	25 – 29
	25 – 31
	26 – 6
90119–06891	16 – 15
90119–06893	15 – 5
90119–06896	18 – 18
	26 – 27
90119–06897	15 – 11
90119–069UB	15 – 28
90119–069UD	17 – 2
90119–069UH	26 – 29
	31 – 42
90119–069UJ	36 – 7
90119–069UP	30 – 5
	30 – 12
90119–069US	23 – 9
90119–069UX	17 – 6
90119–06M35	21 – 7
90119–06MA3	22 – 9
90119–08022	6 – 31
90119–08034	13 – 4
	13 – 10
90119–08043	6 – 35
90119–08096	13 – 12
90119–08097	13 – 5
	13 – 9
90119–08099	6 – 36
90119–08123	21 – 26
90119–08823	18 – 15

PART NO.	REF. NO.
90119–08823	18 – 20
	24 – 8
90119–08844	27 – 48
90119–08859	24 – 7
90119–08942	30 – 33
90119–089U7	31 – 49
90119–089UE	15 – 37
	15 – 43
90119–089UF	17 – 4
90119–089UL	26 – 45
	26 – 47
90119–089UT	21 – 1
90119–089UU	16 – 18
	35 – 44
90119–08M22	7 – 29
	8 – 3
	22 – 12
90119–10011	7 – 24
90119–10029	13 – 13
90119–10046	7 – 16
90119–10047	7 – 15
90119–10806	15 – 35
90119–10810	15 – 3
90149–05903	25 – 23
	36 – 4
90149–06229	19 – 8
90149–10052	24 – 6
90150–05807	18 – 4
90154–06017	36 – 5
90154–06030	36 – 8
90169–049U1	31 – 23
90169–059U1	28 – 6
90170–20802	15 – 19
90176–08080	6 – 33
90176–10001	7 – 21
90179–09379	4 – 9
90183–06902	26 – 9
90185–06014	25 – 12
	25 – 21
	25 – 34
	25 – 38
	26 – 7
	34 – 38
90201–052E8	19 – 21
90201–06028	7 – 9
	10 – 11
90201–06801	17 – 8
	17 – 12

PART NO.	REF. NO.
90201–068M4	15 – 41
90201–06906	34 – 23
90201–099U3	30 – 23
	34 – 16
90201–109U6	30 – 47
90201–12039	2 – 8
90201–132G5	4 – 26
90202–08002	34 – 17
90267–329UR	31 – 25
90267–48020	26 – 30
90267–48802	18 – 9
	27 – 22
	29 – 9
	33 – 22
	34 – 59
90267–48806	29 – 4
90267–48807	25 – 35
	25 – 39
	26 – 10
	26 – 12
	26 – 14
90267–48825	28 – 26
90267–48834	30 – 7
90267–489U1	14 – 57
	22 – 4
	23 – 22
	23 – 24
	25 – 17
	27 – 51
	33 – 5
90267–489U2	24 – 13
	31 – 5
90267–489U6	18 – 10
	25 – 48
	26 – 43
	27 – 60
	28 – 10
	28 – 12
	28 – 16
	28 – 18
	31 – 7
	31 – 11
	32 – 25
	35 – 41
90267–489U8	27 – 12
	28 – 27
90267–489UE	31 – 44
90267–489UP	26 – 20

PART NO.	REF. NO.
90267–489UP	30 – 41
	32 – 7
90269–08801	26 – 19
90280–03047	19 – 10
90387–05800	34 – 5
90387–06080	18 – 27
90387–06119	12 – 10
	21 – 9
90387–06M30	17 – 7
90387–06M60	16 – 14
90387–08M06	15 – 38
	15 – 44
90387–08M30	17 – 5
90387–11002	7 – 22
90401–10040	5 – 24
	9 – 8
90430–06M03	3 – 13
90430–10007	5 – 23
	9 – 9
	39 – 7
90430–12002	18 – 22
90430–16910	32 – 19
90445–09M21	14 – 54
90445–14804	15 – 32
90445–16806	15 – 29
90445–20800	27 – 4
90445–20804	27 – 1
90445–21806	14 – 1
90445–21807	14 – 8
90446–24M89	14 – 38
90446–27M55	14 – 41
	27 – 5
90446–27M73	27 – 2
90446–30MF1	12 – 2
90447–07001	34 – 54
90447–19006	14 – 32
	14 – 35
90447–19011	14 – 29
	14 – 44
90447–19015	15 – 30
90447–19016	6 – 29
90447–19801	14 – 7
90447–22011	14 – 14
90447–22013	14 – 19
90447–22801	14 – 2
90447–22802	14 – 9
90447–22803	35 – 42
90447–22804	31 – 34

PART NO.	REF. NO.
90447–28004	32 – 12
	32 – 16
90447–28008	2 – 18
90450–17M17	6 – 30
90450–70005	7 – 30
90450–70M13	7 – 32
90450–75003	7 – 11
90450–90M10	13 – 22
90450–99801	33 – 8
90450–99804	33 – 9
90450–99M06	13 – 21
90460–90M11	8 – 4
90462–10044	14 – 21
90464–17800	31 – 12
90464–31001	22 – 18
	22 – 29
	22 – 34
90464–32801	18 – 5
	18 – 7
	23 – 20
	27 – 23
	27 – 54
	31 – 10
	33 – 21
	34 – 58
90464–35132	14 – 23
90464–99801	18 – 11
90464–99804	29 – 7
90465–11829	14 – 55
	16 – 16
	23 – 15
	31 – 36
	31 – 37
	31 – 39
90465–11M10	31 – 33
90465–13M18	22 – 17
90465–14M66	12 – 5
	21 – 30
90467–089U1	23 – 13
90467–11019	12 – 13
90467–14803	15 – 33
	32 – 14
	32 – 21
90467–150A0	14 – 6
90467–150A1	3 – 34
	14 – 30
90467–160A0	14 – 25
	14 – 33

PART NO.	REF. NO.
90467–160A0	14 – 36
	14 – 42
	14 – 45
	14 – 47
90467–170A0	14 – 39
90467–17802	33 – 13
90467–18804	27 – 6
90467–190A0	3 – 17
	3 – 23
90467–200A0	10 – 16
	14 – 3
	14 – 15
	14 – 16
	14 – 20
	14 – 27
	14 – 48
	14 – 51
	27 – 14
90467–21800	27 – 11
90467–240A0	2 – 19
90467–240A2	12 – 3
	12 – 4
	12 – 15
90467–25801	32 – 11
90467–26800	32 – 3
	32 – 17
	32 – 28
90480–06M46	19 – 25
90480–18802	36 – 9
90480–19800	25 – 5
90480–21M63	7 – 23
90480–22801	8 – 10
90480–22M15	7 – 27
	8 – 1
	22 – 13
90480–38800	27 – 19
90601–118UF	15 – 31
	27 – 9
90601–152U3	16 – 23
90601–155U4	31 – 28
90601–162U5	31 – 18
90601–170UG	33 – 7
90601–200U1	27 – 13
	34 – 55
90601–200U7	29 – 6
90605–502U1	26 – 17
90605–502U2	25 – 7
90699–50004	31 – 32

PART NO.	REF. NO.
91314–06020	9 – 4
91314–06035	10 – 9
91314–06060	10 – 10
91317–05010	19 – 20
91317–06014	19 – 19
91380–06016	22 – 25
91380–06020	19 – 24
91380–06025	5 – 21
91809–16001	2 – 4
	2 – 5
92014–06012	2 – 13
92903–06600	2 – 10
92903–08600	20 – 16
9290P–20600	15 – 18
92990–06100	20 – 17
	34 – 3
92990–06200	34 – 2
92990–10600	22 – 20
92990–12200	18 – 23
	27 – 26
	30 – 27
92995–06600	19 – 23
	22 – 23
92995–08600	3 – 15
9299R–05200	18 – 8
	26 – 41
	27 – 18
	27 – 38
9299R–06200	25 – 19
	28 – 2
	28 – 20
	31 – 46
	33 – 24
9299R–08200	27 – 53
	30 – 19
	30 – 35
	34 – 41
9299R–10200	30 – 31
	30 – 48
	30 – 50
93102–29008	16 – 5
	39 – 24
93102–29009	16 – 8
	39 – 25
93102–31004	15 – 16
	39 – 28
93102–31009	15 – 15
	39 – 27

PART NO.	REF. NO.
93210–11453	3 – 3
	39 – 4
93210–12790	3 – 35
	39 – 11
93210–18322	11 – 11
	39 – 10
93210–21631	9 – 5
	39 – 9
93210–22MF1	16 – 3
	39 – 23
93210–24M79	1 – 12
	39 – 12
93210–60ME8	22 – 31
	39 – 19
93212–02001	12 – 7
93306–00805	19 – 12
93306–20654	15 – 12
93306–20655	16 – 7
93306–30582	15 – 14
93316–00901	4 – 17
93410–12003	20 – 7
93450–24028	4 – 6
93450–63160	4 – 21
93450–66156	16 – 6
93450–75161	4 – 22
93604–10M03	3 – 8
	7 – 5
	11 – 6
93606–12019	3 – 7
	9 – 3
	13 – 8
	15 – 6
	15 – 34
	16 – 13
93608–16M16	13 – 3
94591–66152	5 – 14
94702–00427	22 – 16
95023–06012	3 – 37
	9 – 10
95023–06025	3 – 26
95024–06014	3 – 20
95024–06020	3 – 21
	10 – 14
95024–06030	10 – 13
95024–06035	10 – 12
95024–08035	13 – 17
95024–08050	19 – 15
95380–06700	20 – 18

PART NO.	REF. NO.
9538R–06600	17 – 9
	17 – 13
9538R–06700	15 – 42
	34 – 24
95720–06300	26 – 26
	34 – 30
	35 – 30
9572R–05300	26 – 40
	27 – 17
	27 – 39
9572R–06300	25 – 18
	26 – 31
	26 – 33
	28 – 3
	28 – 21
	30 – 20
	31 – 16
	31 – 45
	33 – 26
	34 – 50
9572R–08300	27 – 52
	30 – 14
	30 – 24
	30 – 30
	30 – 34
	30 – 42
	34 – 40
	35 – 38
9572R–10300	18 – 13
	30 – 28
	30 – 49
95780–08300	22 – 5
95814–06012	1 – 7
95814–06030	5 – 18
95814–06065	7 – 7
95814–06070	3 – 6
95814–08065	7 – 6
95817–06014	10 – 8
95824–06030	12 – 11
97013–06055	2 – 9
97013–08030	20 – 15
97080–06030	34 – 37
97080–08035	35 – 37
97095–06016	22 – 22
97095–08040	3 – 14
97513–05514	19 – 9
97780–60516	8 – 9
97780–60520	21 – 28

PART NO.	REF. NO.
97780–60530	12 – 8
97880–03008	35 – 14
97880–05025	35 – 17
9788R–05025	27 – 16
	27 – 37
99009–24700	4 – 27
99009–72500	19 – 14
99530–10114	3 – 2
	3 – 29
	19 – 16
99590–10114	13 – 18
99590–14016	7 – 14
	15 – 2
99780–12600	27 – 25

PART NO.	REF. NO.

PART NO.	REF. NO.

PART NO.	REF. NO.

PART NO.	REF. NO.

PART NO.	REF. NO.