YAMAHA

PARTS CATALOGUE

WaveRunner VXR

VX1800A-L (F2M7/6CNC/6CN1)

VX1800A-L (F2M9/6CND/6CN1)

1LF2M-100E1

( )

YAMAHA GENUINE Parts & Accessories

2012/9/13

NEWS NO.	DATE	COMMENT
PE0-WV-120008	Mar., 9,2012	MOD:VX1800(A)-L(F2M) 2012MODEL LIST/ILLUST REVISION
PE0-WV-120019	Aug.,21,2012	COR:HULL & DECK LIST/ILLUST. CORRECTION

VX1800A-L
PARTS CATALOGUE
©2011 by Yamaha Motor Co., Ltd.
1st edition, September 2011
All rights reserved.
Any reprinting or unauthorized use
without the written permission of
Yamaha Motor Co., Ltd.
is expressly prohibited.
Printed in Japan.

FOREWORD

This Parts Catalogue is related to the parts for the model(s) on the cover page. When you are ordering replacement parts, please refer to this Parts Catalogue and quote both part numbers and part names correctly.

1. Modifications or additions which have been made after the issue of the Parts Catalogue will be announced in the Parts News.
   It is advisable that you make the necessary corrections to the Parts Catalogue according to the Parts News.

2. Abbreviations
   The following abbreviations are used in this Parts Catalogue.

   “UR” Use specified parts number.
   “UN” Use as many as needed.
   “AP” Alternate Parts
   “LM” Locally Made (Parts need to be ordered locally)
   “F#” Frame No. (Applicable machine No.)
   “O/S” Over Size

3. The number of components for assembly
   - Parts, which are to be supplied in an assembly, are listed with a dot (.) in front of the part name as shown below.
   - The numeral appearing to the right of each component part indicates the quantity of parts for each assembly unit.

PART NO.	DESCRIPTION	Q’TY	REMARKS
2F5–83310–60	FRONT FLASHER LIGHT ASSY	2	
115–83311–60	.BULB (6V–18W)	1	

4. Applicable colours of graphics are represented in the “REMARKS” as shown below.

PART NO.	DESCRIPTION	Q’TY	REMARKS
2N4–24110–00–X5	FUEL TANK COMP.	2	MXR
3J1–24240–10	.GRAPHIC, FUEL TANK	1	FOR MXR

5. Note that the illustrations for reference in finding parts numbers are not to be used for assembling. When assembling, please use the applicable service manual.

6. The asterisk (*) before a reference number indicates modified items after the first edition.

7. Applicable Serial No.

Engine Serial No.

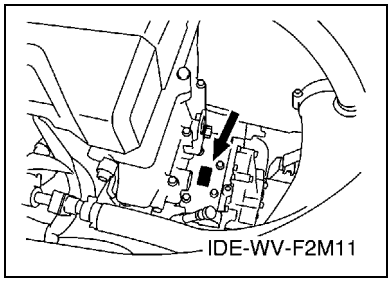

Primary Identification No.

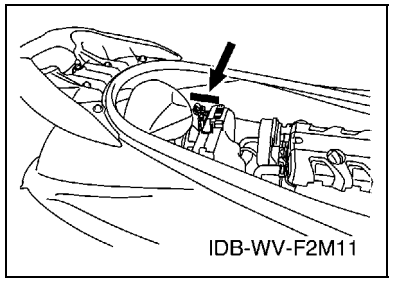

8. Applicable Colour Code (The (*) mark shows Model colour.)

Abbreviation	Colour Name	Colour Code
DNMC(*)	DARK GRAY METALLIC C	0922
DRMR(*)	DEEP RED METALLIC R	1080
SSA	BLACK SOLID A	1000

9. Quantity Column Information

Column No.	Name Of Q'ty Column	Destination
1	CAN	CANADA
2	EUR	EUROPE

10. Applicable Starting Serial No.

Engine Serial No.

Serial No.	Name Of Q'ty Column	Model Code
6CN-1005701	CAN	6CNC
6CN-1005701	EUR	6CND

Primary Identification No.

Serial No.	Name Of Q'ty Column	Model Code
F2M-805701	CAN	F2M7
F2M-805701	EUR	F2M9

CONTENTS

CYLINDER 1 1
CYLINDER 2 2
CRANKCASE 3
CRANKSHAFT & PISTON 5
VALVE 6
INTAKE 1 8
INTAKE 2 10
OIL PUMP 11
OIL PAN 12
OIL COOLER 13
BREATHER OIL 14
EXHAUST 1 15
EXHAUST 2 16
JET UNIT 1 18
JET UNIT 2 20
JET UNIT 3 21
JET UNIT 4 22
GENERATOR 23
STARTING MOTOR 24
ELECTRICAL 1 25
ELECTRICAL 2 27
ELECTRICAL 3 29
ENGINE MOUNT 31
ENGINE HATCH 1 32
ENGINE HATCH 2 33
HULL & DECK 35
GUNWALE & MAT 37
VENTILATION 38
SEAT & UNDER LOCKER 39
FUEL TANK 40
EXHAUST 3 42
CONTROL CABLE 43
STEERING 1 44
STEERING 2 46
GRAPHICS 47
IMPORTANT LABELS 48
IMPORTANT LABELS 2 49
REPAIR KIT 1 50

INDEX

NUMERICAL INDEX 52

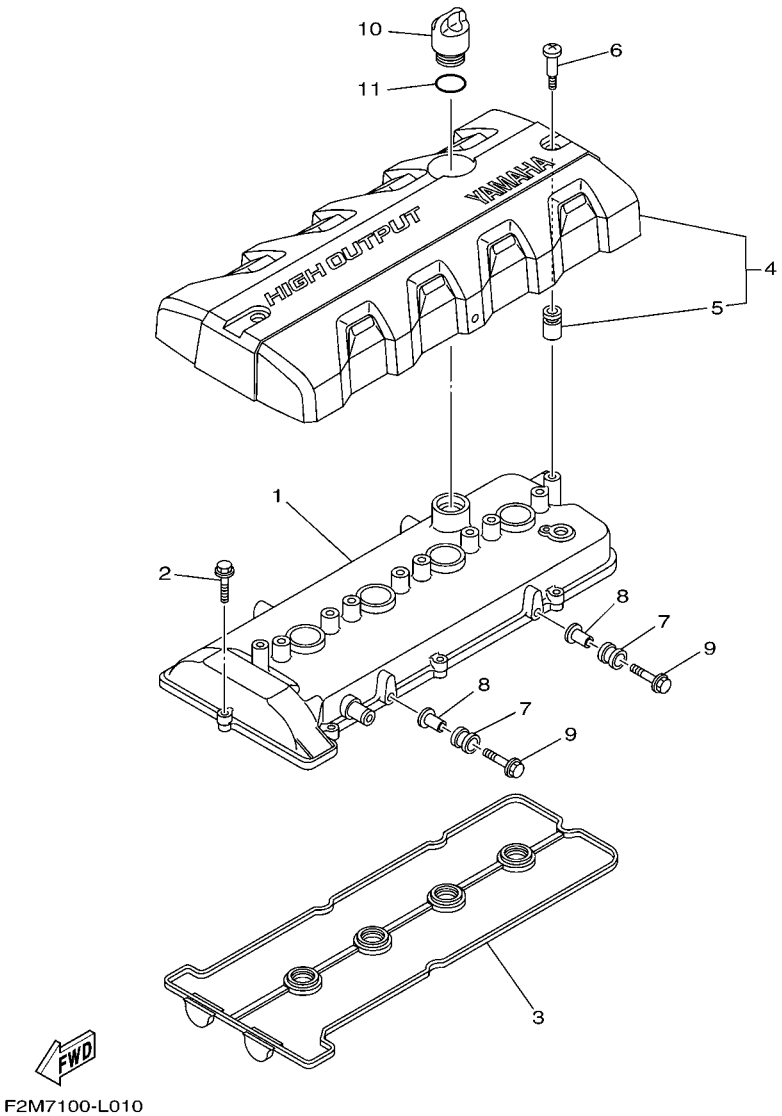

FIG. 1 CYLINDER 1

REF. NO.	PART NO.	DESCRIPTION	CAN	EUR				REMARKS
1	6BH–11191–20	COVER, CYLINDER HEAD 1	1	1				
2	90105–06028	BOLT, FLANGE	8	8				
3	6BH–11193–00	GASKET, HEAD COVER 1	1	1				
4	6BH–E110M–00	COVER ASSY 1	1	1				
5	6S5–E1328–00	.GROMMET, ANODE	1	1				
6	6S5–E118E–00	BOLT, COVER MOUNTING	2	2				
7	61N–82317–00	DAMPER, IGNITION COIL	2	2				
8	90387–06119	COLLAR	2	2				
9	95824–06025	BOLT, FLANGE	2	2				
10	6S5–15363–00	PLUG, OIL	1	1				
11	93210–24M79	O-RING	1	1				

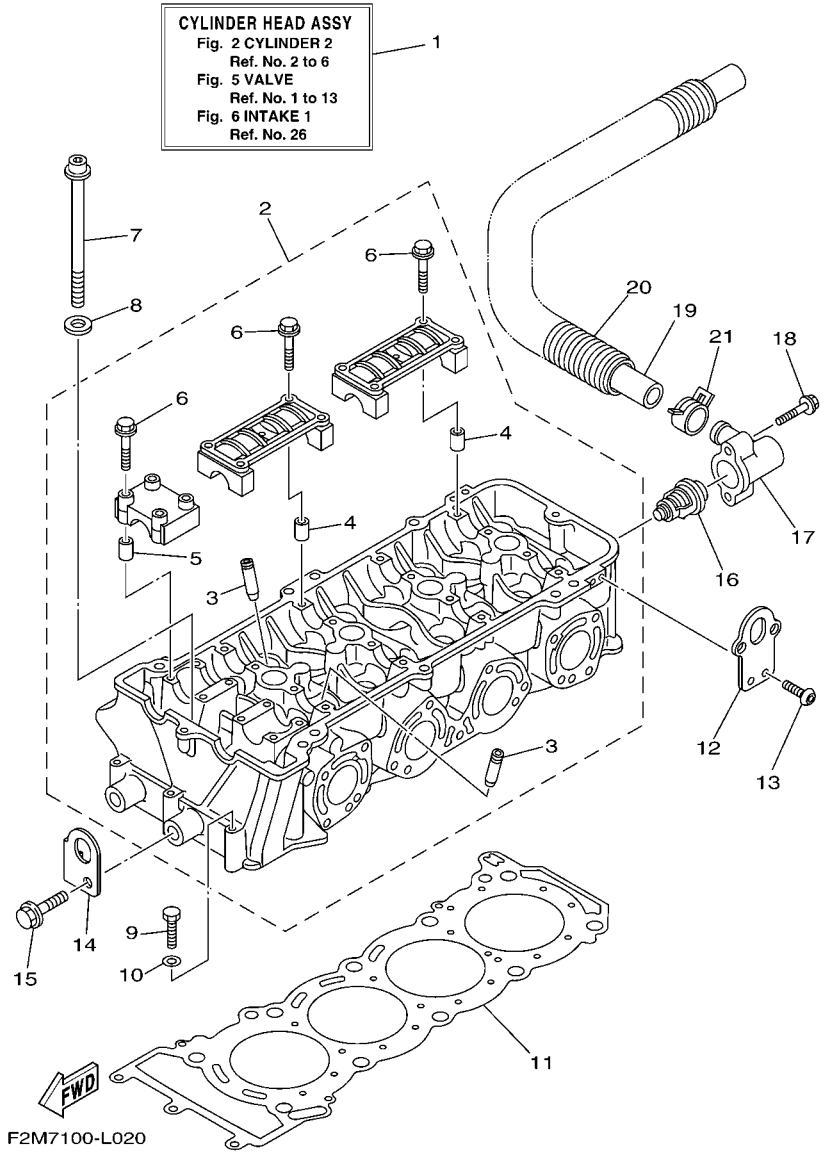

FIG. 2 CYLINDER 2

REF. NO.	PART NO.	DESCRIPTION	CAN	EUR				REMARKS
1	6BH–W009A–01–94	CYLINDER HEAD ASSY	1	1				
2	6BH–11102–10	CYLINDER HEAD ASSY	1	1				
3	6S5–11133–10	.GUIDE, VALVE 1	16	16				
4	91809–16001	.PIN, DOWEL	8	8				
5	91809–16001	.PIN, DOWEL	4	4				
6	90105–07009	.BOLT, FLANGE	24	24				
7	6S5–12228–01	BOLT	10	10				
8	90201–12039	WASHER, PLATE	10	10				
9	97013–06055	BOLT	3	3				
10	92903–06600	WASHER, PLATE	3	3				
11	6BH–11181–00	GASKET, CYLINDER HEAD 1	1	1				
12	6BH–1111E–00	HANGER, ENGINE 2	2	2				
13	92014–06012	BOLT, BUTTON HEAD	4	4				
14	6BH–11119–00	HANGER, ENGINE	1	1				
15	97513–10525	BOLT, WITH WASHER	1	1				
16	6D3–12411–00	THERMOSTAT	1	1				
17	6BH–12413–00	COVER, THERMOSTAT	1	1				
18	90105–06035	BOLT, FLANGE	2	2				
19	6S5–12578–00	HOSE 3	1	1				
20	90447–28008	TUBE	1	1				
21	90467–240A0	CLIP	1	1				

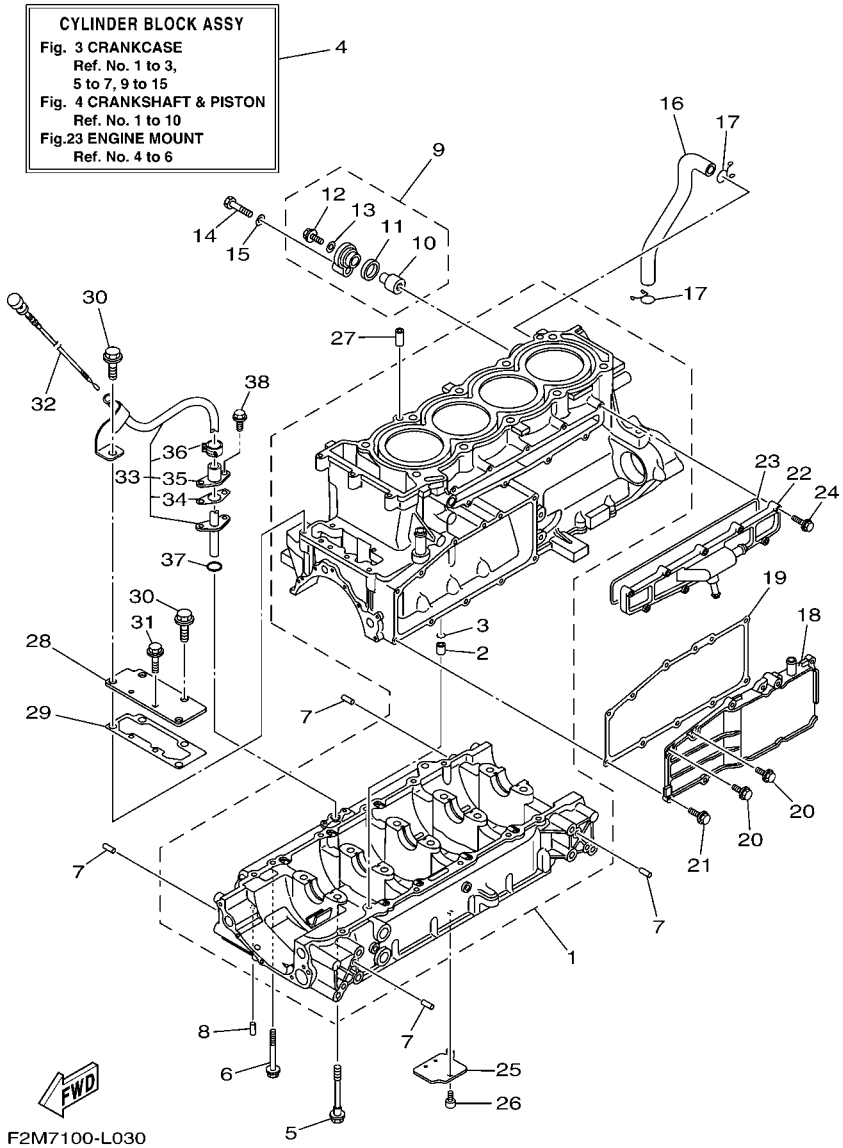

FIG. 3 CRANKCASE

REF. NO.	PART NO.	DESCRIPTION	CAN	EUR				REMARKS
1	6BH–15100–20	CRANKCASE ASSY	1	1				Go to P/N : PE0-WV-120008
2	99530–10114	.PIN, DOWEL	1	1				
3	93210–11453	.O-RING	1	1				
4	6BH–W009B–11–94	CYLINDER BLOCK ASSY	1	1				Go to P/N : PE0-WV-120008
5	90105–10071	BOLT, FLANGE	10	10				
6	95814–06070	BOLT, FLANGE	12	12				
7	93606–12019	PIN, DOWEL	8	8				
8	93604–10M03	PIN, DOWEL	2	2				
9	69J–11301–10	ANODE COVER ASSY	1	1				
10	68V–11325–02	.ANODE	1	1				
11	67F–11328–00	.GROMMET, ANODE	1	1				
12	90105–06M07	.BOLT, FLANGE	1	1				
13	90430–06M03	.GASKET	1	1				
14	97095–08040	BOLT	1	1				
15	92995–08600	WASHER	1	1				
16	6S5–11377–00	HOSE	1	1				
17	90467–190A0	CLIP	2	2				
18	6S5–1131M–10–8P	COVER	1	1				
19	6BH–13557–00	GASKET	1	1				
20	95024–06014	BOLT, FLG.(SMALL HEAD)	2	2				
21	95024–06020	BOLT, FLG.(SMALL HEAD)	9	9				
22	6S5–12469–01–94	JOINT 1	1	1				
23	6S5–12517–01	GASKET, WATER INLET	1	1				
24	95023–06025	BOLT	9	9				
25	6S5–13337–10	PLATE, BAFFLE LOWER	1	1				
26	90110–06182	BOLT, HEXAGON SOCKET HEAD	1	1				
27	99530–10114	PIN, DOWEL	2	2				

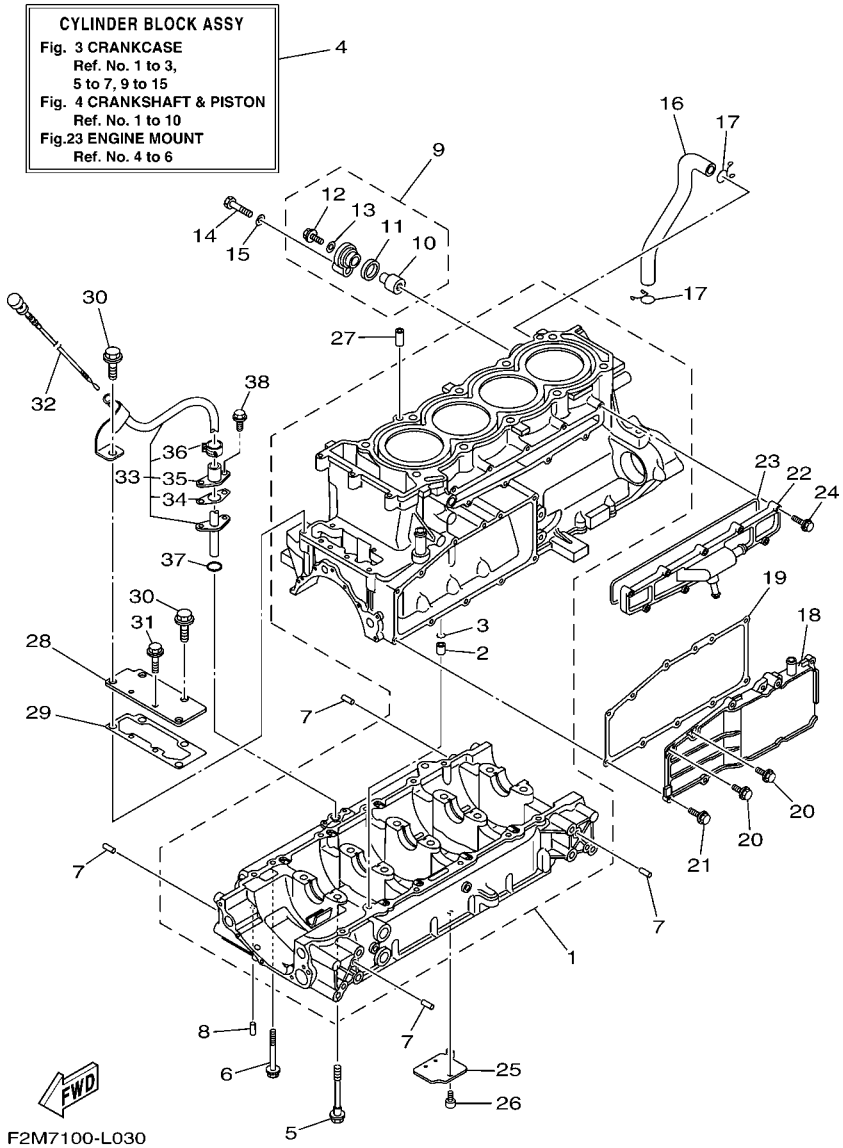

FIG. 3 CRANKCASE

REF. NO.	PART NO.	DESCRIPTION	CAN	EUR				REMARKS
28	6BH–1131C–00	COVER, JOINT	1	1				
29	6BH–1131B–00	GASKET, COVER	1	1				
30	95814–08020	BOLT, FLANGE	4	4				
31	95814–06016	BOLT, FLANGE	2	2				
32	6BH–15362–00	PLUG, OIL LEVEL	1	1				
33	6BH–8572F–00	PIPE, OIL LEVEL	1	1				
34	6BH–1319K–00	.PLATE	1	1				
35	6BH–85516–00	.SPACER	1	1				
36	90467–150A1	.CLIP	1	1				
37	93210–12790	O-RING	1	1				
38	90109–06268	BOLT	2	2				

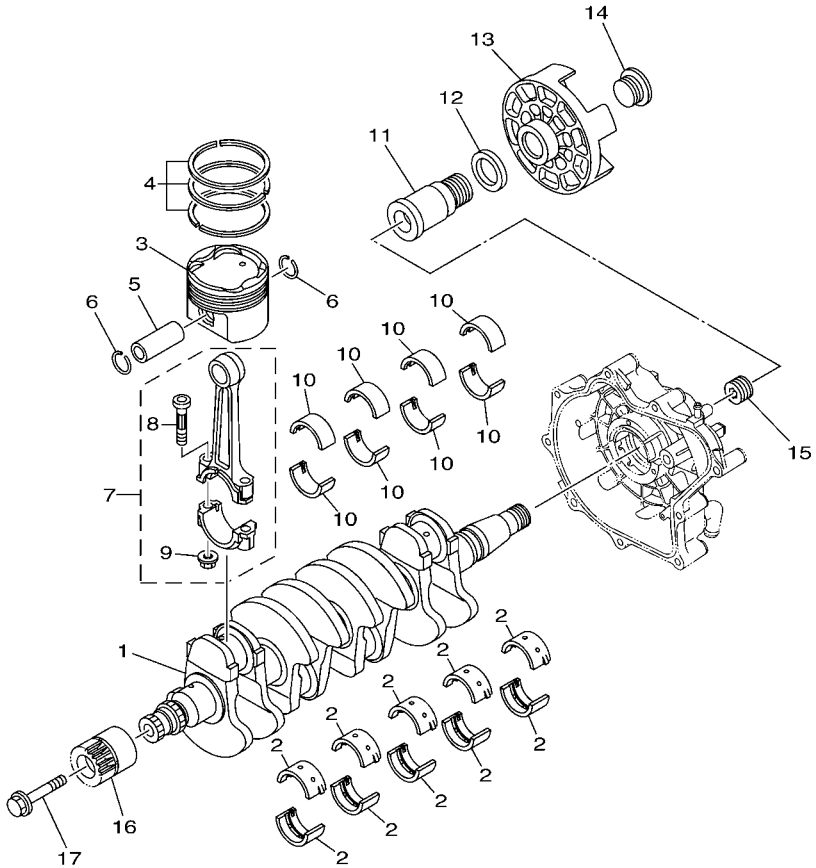

F2H1100-H040

FIG. 4 CRANKSHAFT & PISTON

REF. NO.	PART NO.	DESCRIPTION	CAN	EUR				REMARKS
1	6S5–11411–00	CRANKSHAFT	1	1				
2	6S5–11416–00	PLANE BEARING, CRANKSHAFT 1	10	10				UR BROWN
	6S5–11416–10	PLANE BEARING, CRANKSHAFT 1	10	10				UR BLACK
	6S5–11416–20	PLANE BEARING, CRANKSHAFT 1	10	10				UR BLUE
	6S5–11416–30	PLANE BEARING, CRANKSHAFT 1	10	10				UR GREEN
	6S5–11416–40	PLANE BEARING, CRANKSHAFT 1	10	10				UR YELLOW
3	6BH–11631–00–B0	PISTON (STD)	4	4				
4	6S5–11603–00	PISTON RING SET (STD)	4	4				
5	6S5–11633–00	PIN, PISTON	4	4				
6	93450–24028	CIRCLIP	8	8				
7	6BH–11650–00	CONNECTING ROD ASSY	4	4				
8	6S5–11654–00	.BOLT, CONNECTING ROD	2	2				
9	90179–09379	.NUT	2	2				
10	6S5–11656–00	PLANE BEARING, CONNECTING ROD	8	8				UR BROWN
	6S5–11656–10	PLANE BEARING, CONNECTING ROD	8	8				UR BLACK
	6S5–11656–20	PLANE BEARING, CONNECTING ROD	8	8				UR BLUE
	6S5–11656–30	PLANE BEARING, CONNECTING ROD	8	8				UR GREEN
11	6S5–17572–01	SHAFT, TRANSFER	1	1				
12	6S5–12289–00	WASHER	1	1				
13	6S5–45813–01–94	FLANGE, COUPLING	1	1				
14	6S5–17525–01	HOLDER 2	1	1				
15	6S5–11459–01	NUT, SPECIAL	1	1				
16	6BH–17586–10	GEAR, TRANSFER DRIVE	1	1				
17	6S5–17031–00	BOLT	1	1				

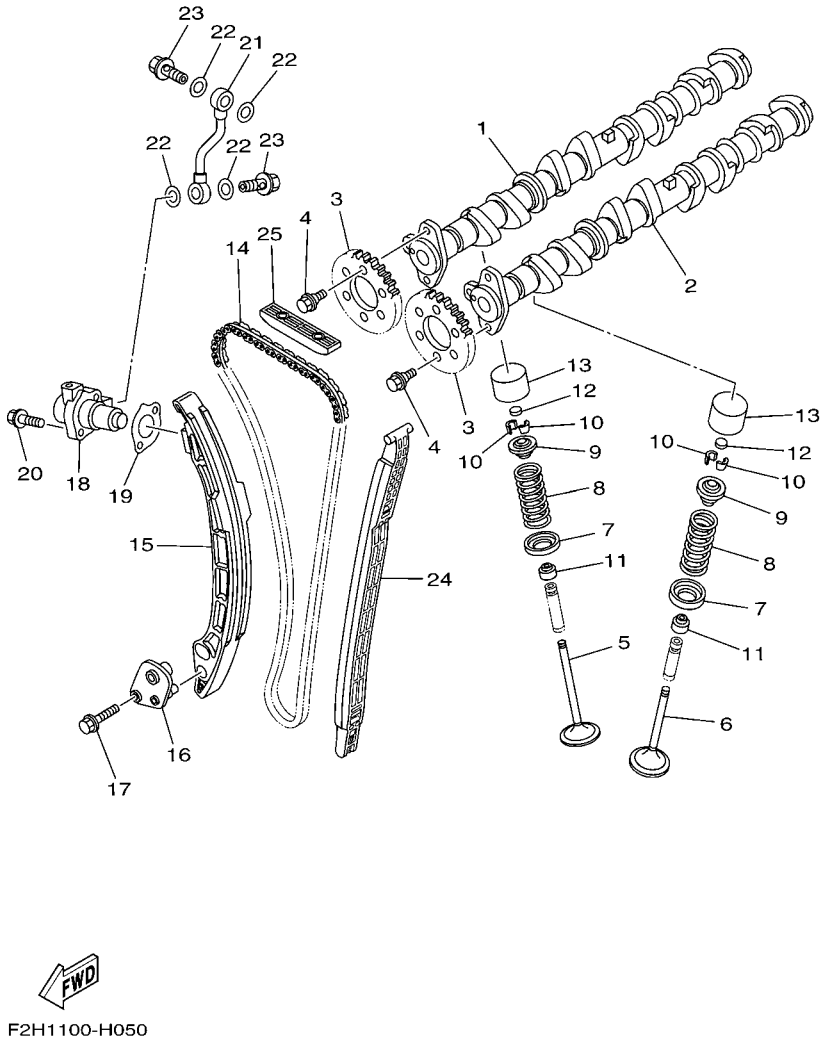

FIG. 5 VALVE

REF. NO.	PART NO.	DESCRIPTION	CAN	EUR				REMARKS
1	6BH–12171–00	CAMSHAFT 1	1	1				
2	6BH–12181–00	CAMSHAFT 2	1	1				
3	6D3–12176–00	SPROCKET, CAM CHAIN	2	2				
4	90105–07004	BOLT, FLANGE	4	4				
5	6S5–12111–00	VALVE, INTAKE	8	8				
6	6S5–12121–00	VALVE, EXHAUST	8	8				
7	6S5–12116–00	SEAT, VALVE SPRING	16	16				
8	6S5–12113–00	SPRING, VALVE INNER	16	16				
9	6S5–12117–00	RETAINER, VALVE SPRING	16	16				
10	3LD–12118–00	COTTER, VALVE	32	32				
11	51Y–12119–00	SEAL, VALVE STEM	16	16				
12	3LD–12168–00	PAD, ADJUSTING (1.20)	16	16				UR
	3LD–12168–20	PAD, ADJUSTING (1.25)	16	16				UR
	3LD–12168–40	PAD, ADJUSTING (1.30)	16	16				UR
	3LD–12168–60	PAD, ADJUSTING (1.35)	16	16				UR
	3LD–12168–80	PAD, ADJUSTING (1.40)	16	16				UR
	3LD–12168–A0	PAD, ADJUSTING (1.45)	16	16				UR
	3LD–12168–F0	PAD, ADJUSTING (1.50)	16	16				UR
	3LD–12168–H1	PAD, ADJUSTING (1.55)	16	16				UR
	3LD–12168–K1	PAD, ADJUSTING (1.60)	16	16				UR
	3LD–12168–M1	PAD, ADJUSTING (1.65)	16	16				UR
	3LD–12168–R1	PAD, ADJUSTING (1.70)	16	16				UR
	3LD–12168–U1	PAD, ADJUSTING (1.75)	16	16				UR
	3LD–12168–W1	PAD, ADJUSTING (1.80)	16	16				UR
	3LD–12168–Y1	PAD, ADJUSTING (1.85)	16	16				UR
	3LD–12169–11	PAD, ADJUSTING (1.90)	16	16				UR
	3LD–12169–31	PAD, ADJUSTING (1.95)	16	16				UR

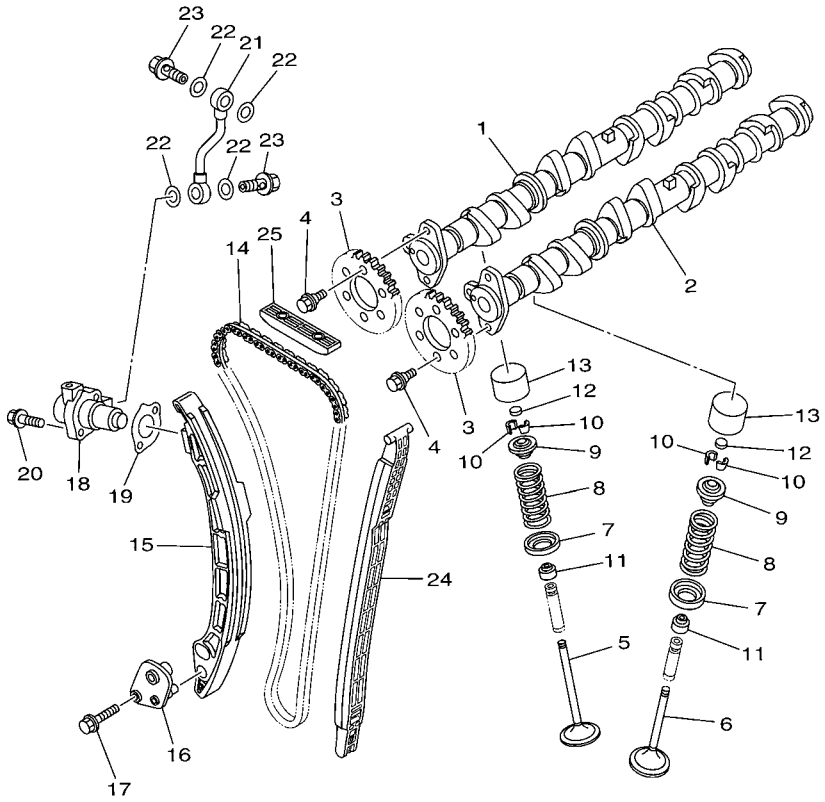

F2H1100-H050

FIG. 5 VALVE

REF. NO.	PART NO.	DESCRIPTION	CAN	EUR				REMARKS
12	3LD–12169–50	PAD, ADJUSTING (2.00)	16	16				UR
	3LD–12169–70	PAD, ADJUSTING (2.05)	16	16				UR
	3LD–12169–90	PAD, ADJUSTING (2.10)	16	16				UR
	3LD–12169–E0	PAD, ADJUSTING (2.15)	16	16				UR
	3LD–12169–G0	PAD, ADJUSTING (2.20)	16	16				UR
	3LD–12169–J0	PAD, ADJUSTING (2.25)	16	16				UR
	3LD–12169–L0	PAD, ADJUSTING (2.30)	16	16				UR
13	6S5–12153–00	LIFTER, VALVE	16	16				
14	94591–66152	CHAIN	1	1				
15	6BH–12252–00	DAMPER, CHAIN 2	1	1				
16	6BH–12279–00	PLATE	1	1				
17	95814–06030	BOLT, FLANGE	2	2				
18	6S5–12210–00	TENSIONER ASSY, CAM CHAIN	1	1				
19	6S5–121E2–00	GASKET	1	1				
20	91380–06025	BOLT	2	2				
21	6S5–13418–00	PIPE, OIL 2	1	1				
22	90430–10007	GASKET	4	4				
23	90401–10040	BOLT, UNION	2	2				
24	6BH–12251–00	DAMPER, CHAIN 1	1	1				
25	6BH–12241–00	GUIDE, STOPPER 2	1	1				

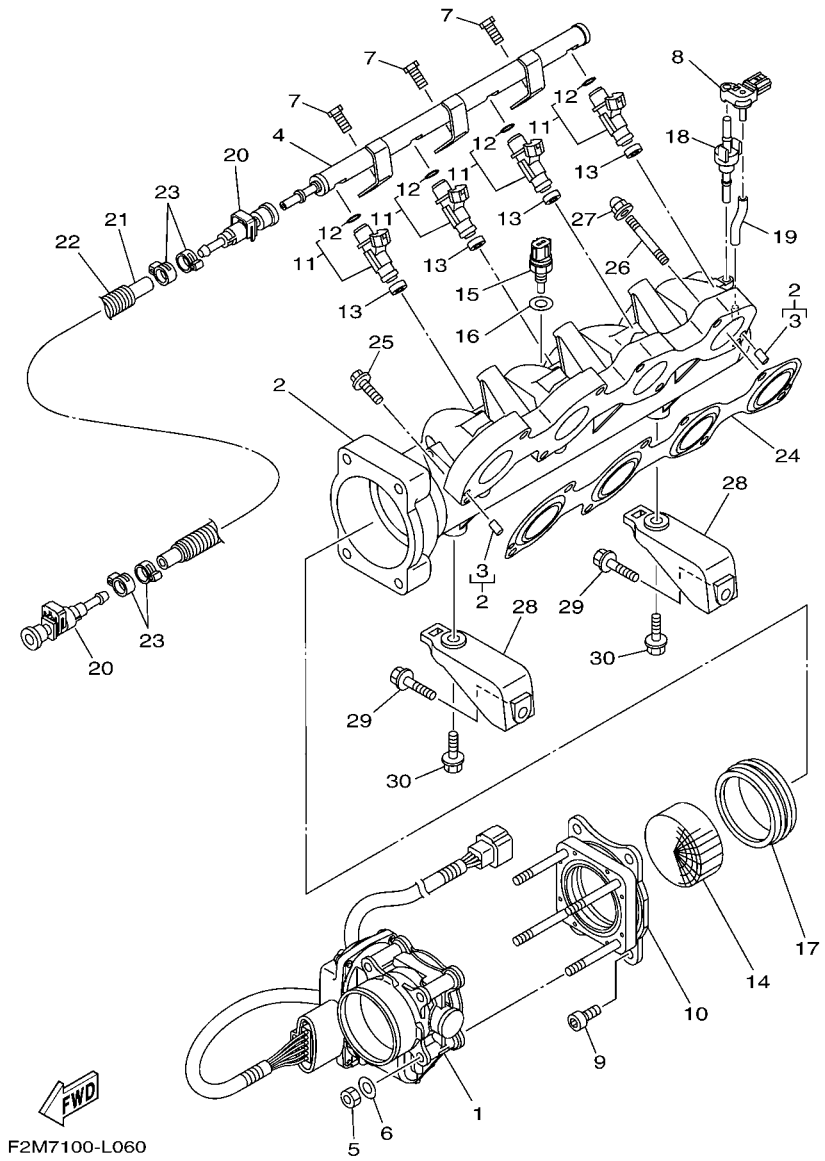

FIG. 6 INTAKE 1

REF. NO.	PART NO.	DESCRIPTION	CAN	EUR				REMARKS
1	6BH–13750–00	THROTTLE BODY ASSY	1	1				
2	6BH–13641–01	MANIFOLD, INTAKE 1	1	1				
3	93604–10011	.PIN, DOWEL	2	2				
4	6S5–12880–10	DELIVERY PIPE	1	1				
5	6P2–13588–00	NUT	4	4				
6	6P2–13578–00	WASHER	4	4				
7	63P–14446–00	BOLT	3	3				
8	6BH–82380–00	SENSOR, PRESSURE	1	1				
9	6S5–14496–00	BOLT	4	4				
10	6BH–14360–00	THROTTLE DAMPER ASSY	1	1				
11	6S5–13761–10	INJECTOR	4	4				
12	68V–1416A–00	.O-RING	1	1				
13	8FP–13556–10	GASKET, MANIFOLD	4	4				
14	6BH–1444B–00	RIBBON	1	1				
15	65L–85886–00	THERMOSENSOR	1	1				
16	6S5–14285–00	WASHER	1	1				
17	6BH–14457–00	SEAL	1	1				
18	6BH–14445–00	GROMMET	1	1				
19	6BH–13532–00	HOSE, VACUUM SENSING 3	1	1				
20	6S5–24300–01	FUEL PIPE JOINT	2	2				
21	6CN–14294–10	HOSE	1	1				
22	90447–19020	TUBE (L610)	1	1				
23	90450–17M17	HOSE CLAMP ASSY	4	4				
24	6BH–13645–00	GASKET, MANIFOLD 1	1	1				
25	90119–08022	BOLT, WITH WASHER	6	6				
26	90116–08032	BOLT, STUD	2	2				
27	90176–08080	NUT, CROWN	2	2				

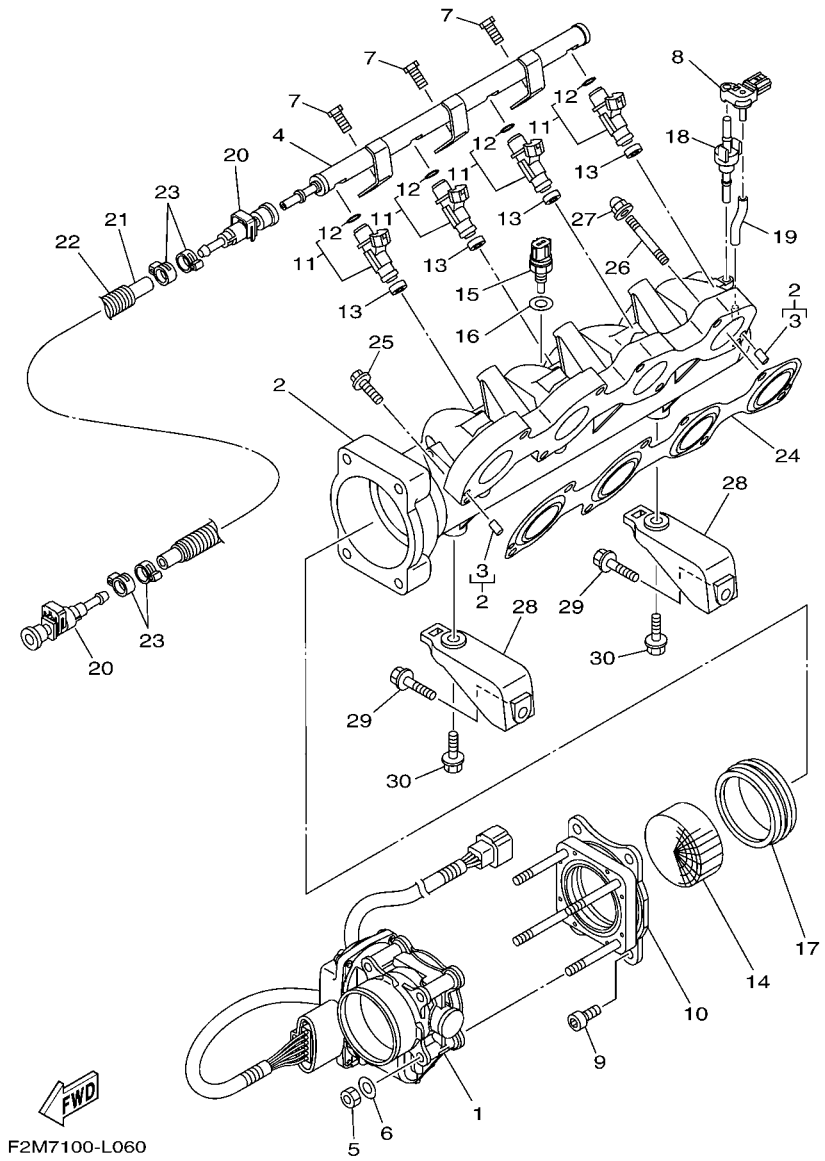

FIG. 6 INTAKE 1

REF. NO.	PART NO.	DESCRIPTION	CAN	EUR				REMARKS
28	6S5–14413–00–94	STAY	2	2				
29	90119–08043	BOLT, WITH WASHER	2	2				
30	90119–08099	BOLT, WITH WASHER	2	2				

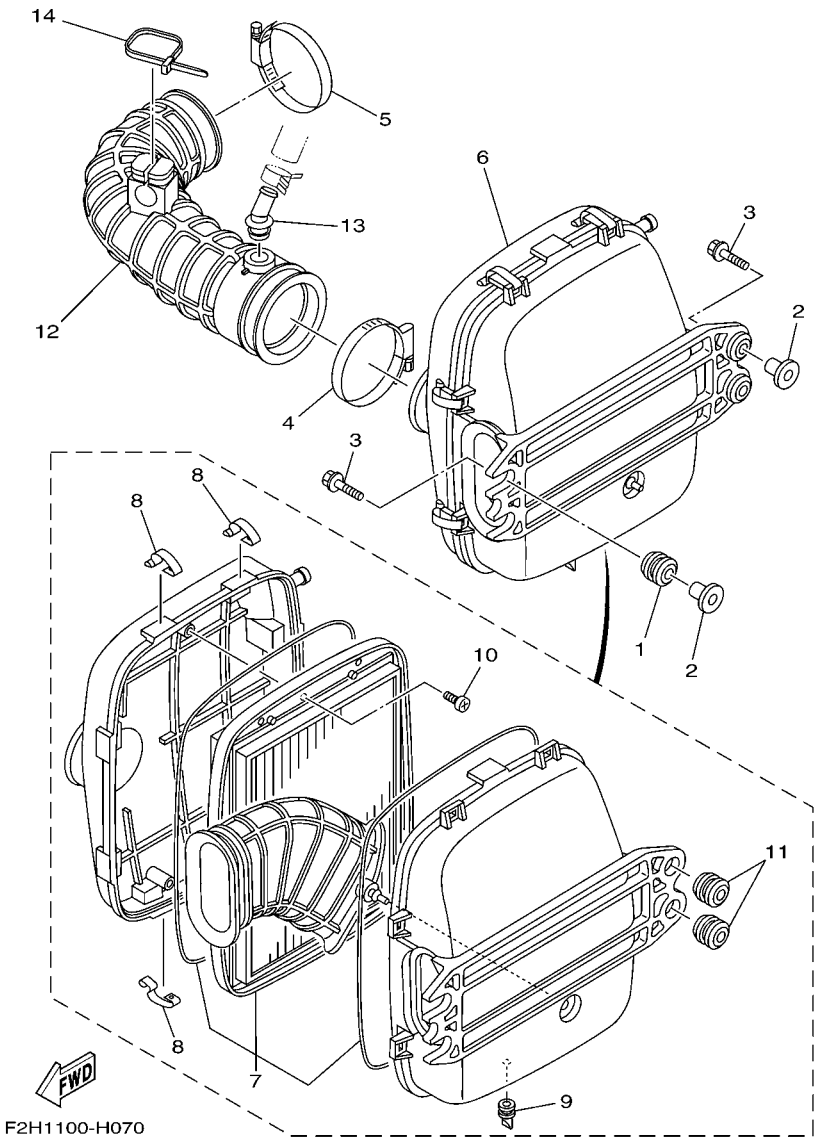

FIG. 7 INTAKE 2

REF. NO.	PART NO.	DESCRIPTION	CAN	EUR				REMARKS
1	90480–22M15	GROMMET	2	2				
2	6D3–14495–00	COLLAR	4	4				
3	90119–08M22	BOLT, WITH WASHER	4	4				
4	90450–90001	HOSE CLAMP ASSY	1	1				
5	90450–90001	HOSE CLAMP ASSY	1	1				
6	6S5–E4410–01	AIR CLEANER ASSY.	1	1				
7	6S5–E4451–00	.ELEMENT, AIR CLEANER	1	1				
8	6S5–E4436–00	.HOOK	8	8				
9	6S5–G2717–00	.RUBBER, SEAL 2	1	1				
10	97780–60516	.SCREW, TAPPING	3	3				
11	90480–22801	.GROMMET	2	2				
12	6BH–E4419–00	PIPE	1	1				
13	6BH–R1142–10	CONNECTION	1	1				
14	90464–40825	CLAMP	1	1				

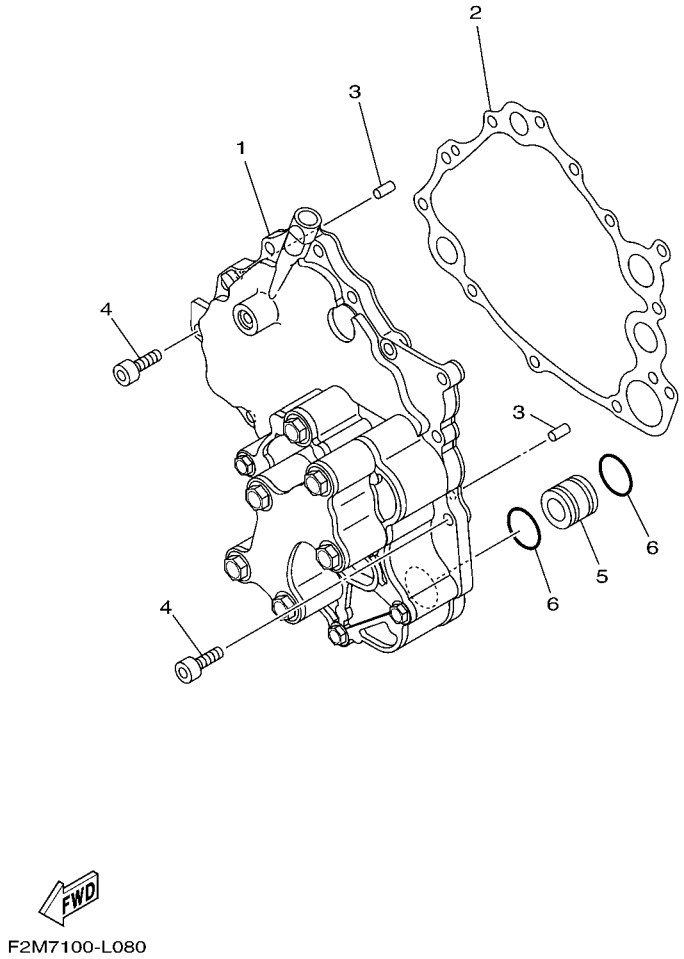

FIG. 8 OIL PUMP

REF. NO.	PART NO.	DESCRIPTION	CAN	EUR				REMARKS
1	6BH–13300–10	OIL PUMP ASSY	1	1				
2	6S5–13563–00	GASKET	1	1				
3	93606–12019	PIN, DOWEL	2	2				
4	91314–06020	BOLT, HEXAGON SOCKET HEAD	12	12				
5	6S5–13446–10	CONNECTOR	1	1				
6	93210–21631	O-RING	2	2				

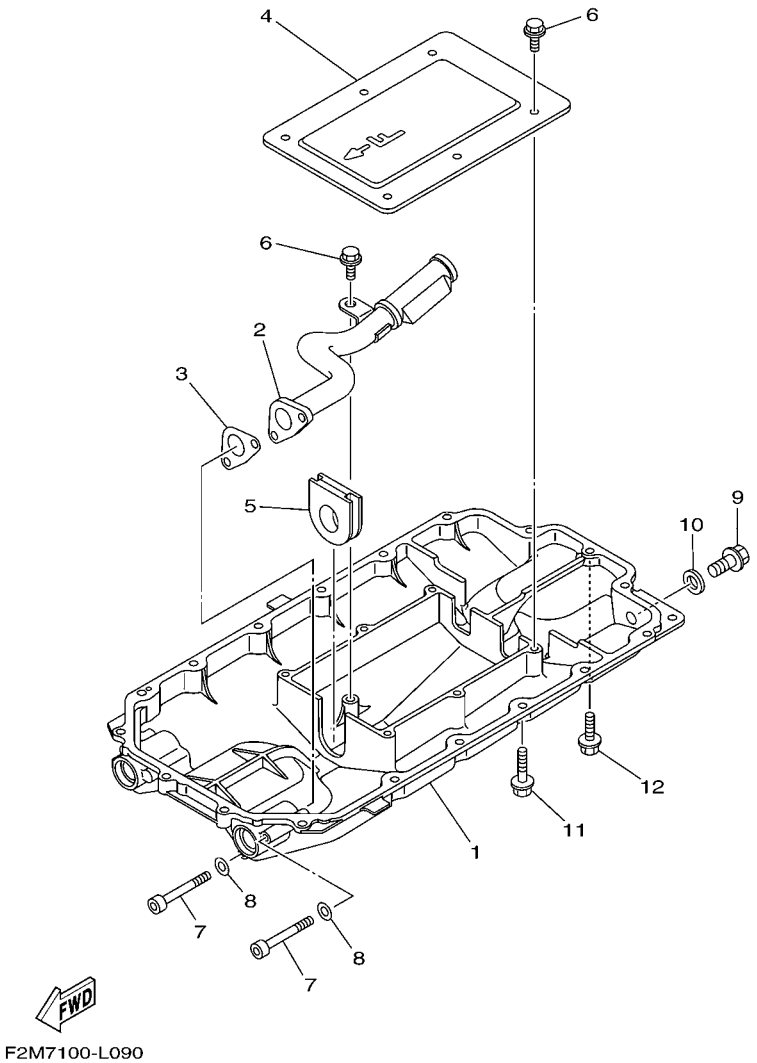

FIG. 9 OIL PAN

REF. NO.	PART NO.	DESCRIPTION	CAN	EUR				REMARKS
1	6S5–1310A–20	PAN, OIL	1	1				
2	6S5–13405–10	OIL PIPE COMP. 1	1	1				
3	6S5–13477–00	GASKET	1	1				
4	6S5–13317–10	PLATE, BAFFLE	1	1				
5	6S5–15486–10	GROMMET	1	1				
6	95817–06014	BOLT, FLANGE	7	7				
7	91314–06060	BOLT, HEXAGON SOCKET HEAD	2	2				
8	90201–06028	WASHER, PLATE	2	2				
9	95814–08020	BOLT, FLANGE	1	1				
10	90430–08209	GASKET	1	1				
11	95024–06035	BOLT, FLG.(SMALL HEAD)	17	17				
12	95024–06020	BOLT, FLG.(SMALL HEAD)	1	1				

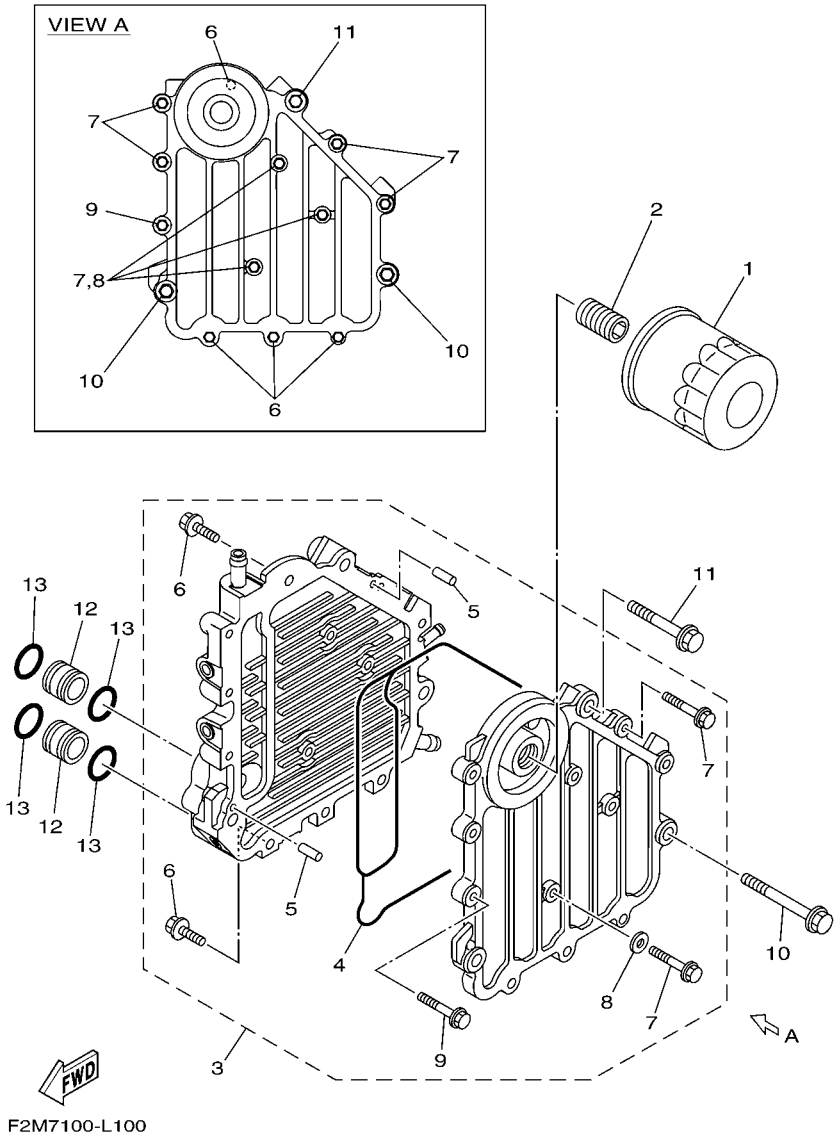

FIG. 10 OIL COOLER

REF. NO.	PART NO.	DESCRIPTION	CAN	EUR				REMARKS
1	69J–13440–01	ELEMENT ASSY, OIL CLEANER	1	1				
2	6S5–12858–00	BOLT, UNION	1	1				
3	6BH–13470–10	OIL COOLER ASSY	1	1				
4	6BH–13556–00	.GASKET, MANIFOLD	1	1				
5	93604–10M03	.PIN, DOWEL	2	2				
6	90105–06184	.BOLT, FLANGE	4	4				
7	90105–06185	.BOLT, FLANGE	7	7				
8	90430–06232	.GASKET	3	3				
9	90105–08054	.BOLT, FLANGE	1	1				
10	90105–08169	BOLT, FLANGE	2	2				
11	90105–08170	BOLT, FLANGE	1	1				
12	60E–13446–00	CONNECTOR	2	2				
13	93210–18322	O-RING	4	4				

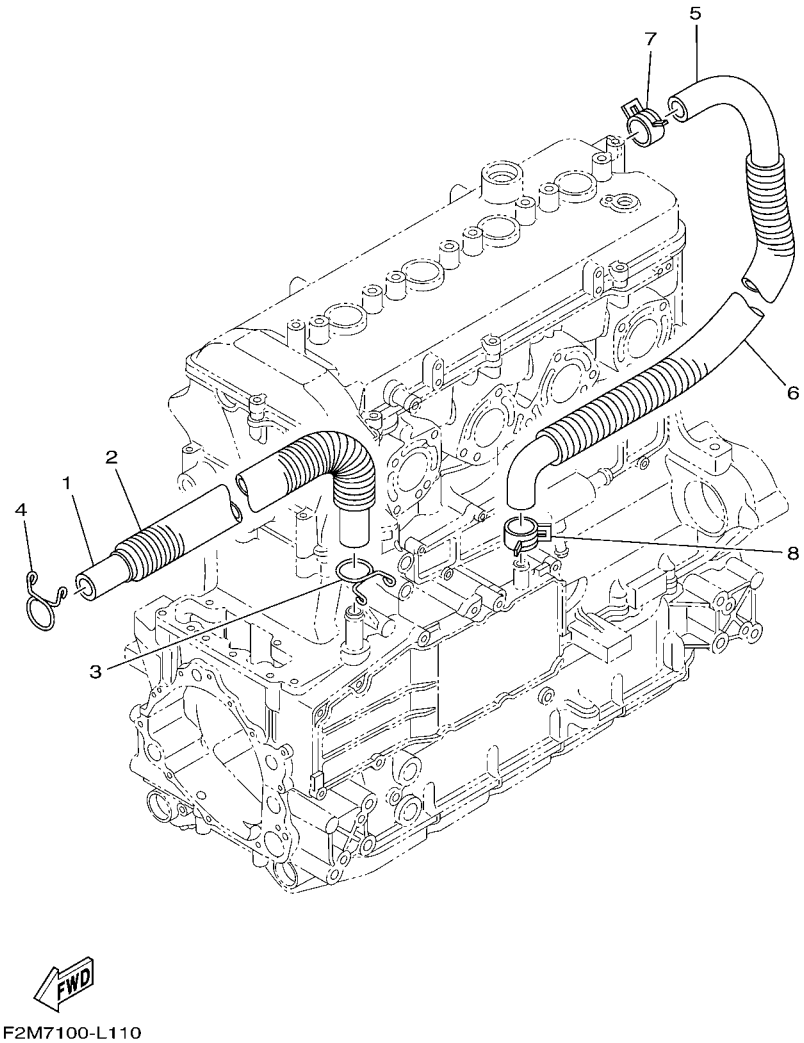

FIG. 11 BREATHER OIL

REF. NO.	PART NO.	DESCRIPTION	CAN	EUR				REMARKS
1	6S5–11166–10	PIPE, BREATHER 1	1	1				
2	90447–22015	TUBE	1	1				
3	90467–190A0	CLIP	1	1				
4	90467–190A0	CLIP	1	1				
5	6S5–11167–10	PIPE, BREATHER 2	1	1				
6	90447–22016	TUBE	1	1				
7	90467–240A0	CLIP	1	1				
8	90467–200A3	CLIP	1	1				

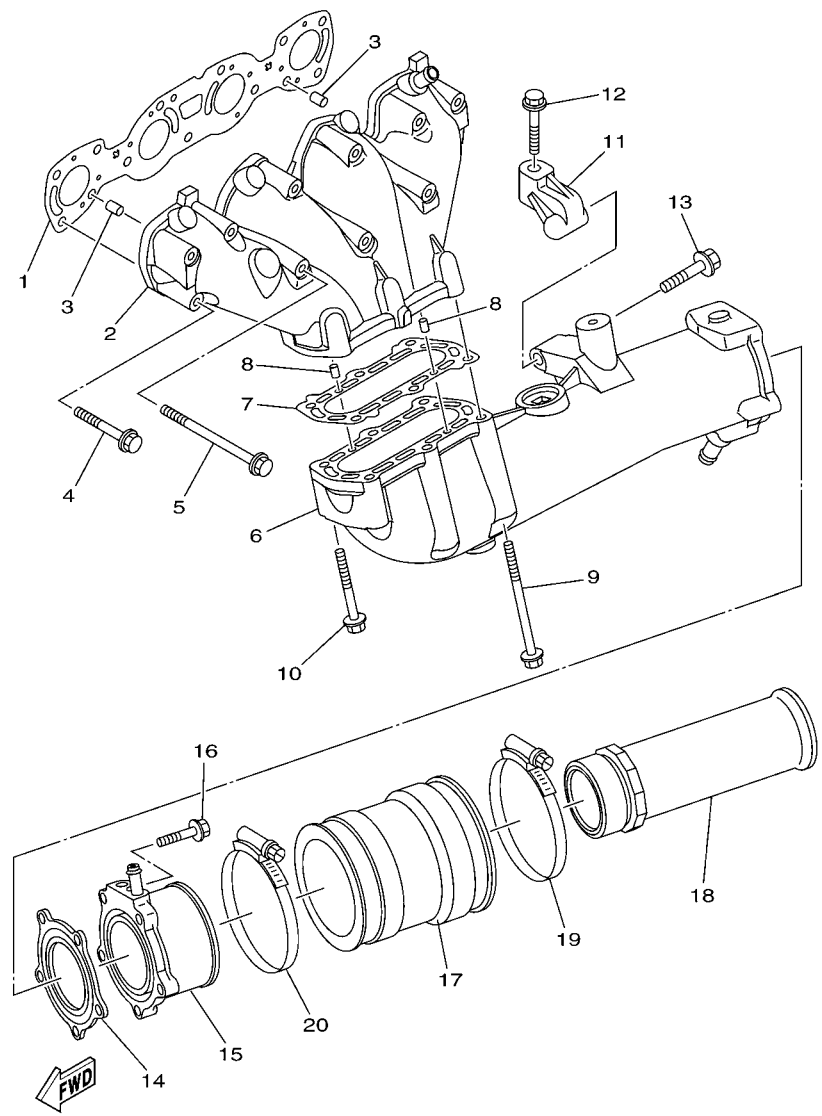

F2H1100-H120

FIG. 12 EXHAUST 1

REF. NO.	PART NO.	DESCRIPTION	CAN	EUR				REMARKS
1	6BH–14613–00	GASKET, EXHAUST PIPE	1	1				
2	6BH–14711–10	MUFFLER 1	1	1				
3	93608–16M16	PIN, DOWEL	2	2				
4	90119–08034	BOLT, WITH WASHER	8	8				
5	90119–08097	BOLT, WITH WASHER	3	3				
6	6BH–14721–10	MUFFLER 2	1	1				
7	6S5–14739–00	GASKET, MUFFLER DAMPER 1	1	1				
8	93606–12019	PIN, DOWEL	2	2				
9	90119–08097	BOLT, WITH WASHER	4	4				
10	90119–08034	BOLT, WITH WASHER	2	2				
11	6S5–14771–00–94	STAY, MUFFLER 1	1	1				
12	90119–08096	BOLT, WITH WASHER	1	1				
13	90119–10029	BOLT, WITH WASHER	1	1				
14	6BH–14749–00	GASKET, MUFFLER DAMPER 2	1	1				
15	6BH–14784–01–94	PIPE, TAIL	1	1				
16	95024–08035	BOLT, FLG.(SMALL HEAD)	5	5				
17	6S5–14752–00	PIPE, OUTLET	1	1				
18	6S5–1475A–00	PIPE 1	1	1				
19	90450–99M06	HOSE CLAMP ASSY	1	1				
20	90450–90M10	HOSE CLAMP ASSY	1	1				

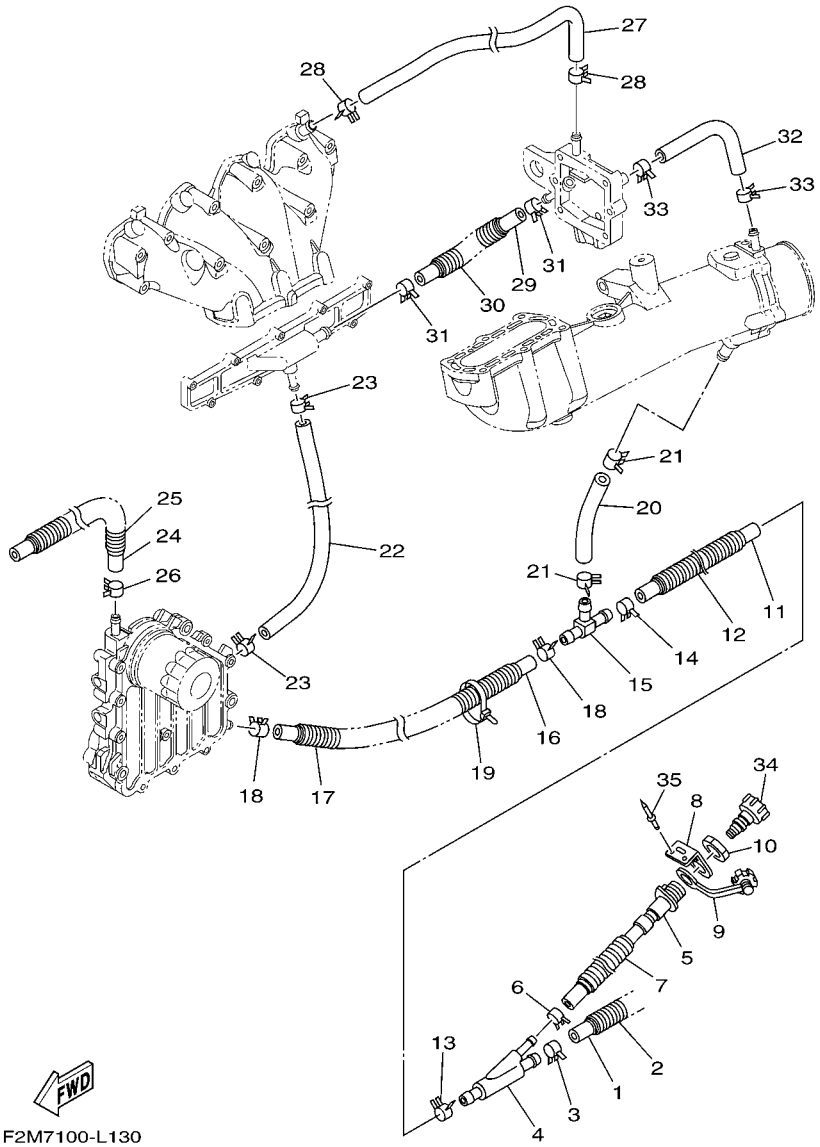

FIG. 13 EXHAUST 2

REF. NO.	PART NO.	DESCRIPTION	CAN	EUR				REMARKS
1	90445–21806	HOSE (L250)	1	1				
2	90447–22801	TUBE (L200)	1	1				
3	90467–200A3	CLIP	1	1				
4	60E–12581–00	JOINT, HOSE 1	1	1				
5	63M–12580–00	JOINT ASSY	1	1				
6	90467–150A5	CLIP	1	1				
7	90447–19801	TUBE (L485)	1	1				
8	60E–12443–00	STAY	1	1				
9	682–84385–01	CAP,1	1	1				
10	EU0–61652–00	NUT	1	1				
11	6S5–1243E–01	HOSE 2	1	1				
12	90447–22011	TUBE (L170)	1	1				
13	90467–200A3	CLIP	1	1				
14	90467–200A3	CLIP	1	1				
15	6BH–12584–00	JOINT, HOSE 3	1	1				
16	90445–18012	HOSE (L400)	1	1				
17	90447–19005	TUBE (L260)	1	1				
18	90467–160A0	CLIP	2	2				
19	90464–35132	CLAMP	1	1				
20	6S5–12589–01	HOSE 6	1	1				
21	90467–200A3	CLIP	1	1				
22	6BH–1244H–00	HOSE 5	1	1				
23	90467–150A1	CLIP	2	2				
24	6CN–12588–00	HOSE 5	1	1				
25	90447–19021	TUBE (L860)	1	1				
26	90467–160A0	CLIP	1	1				
27	6BH–12577–00	HOSE 2	1	1				

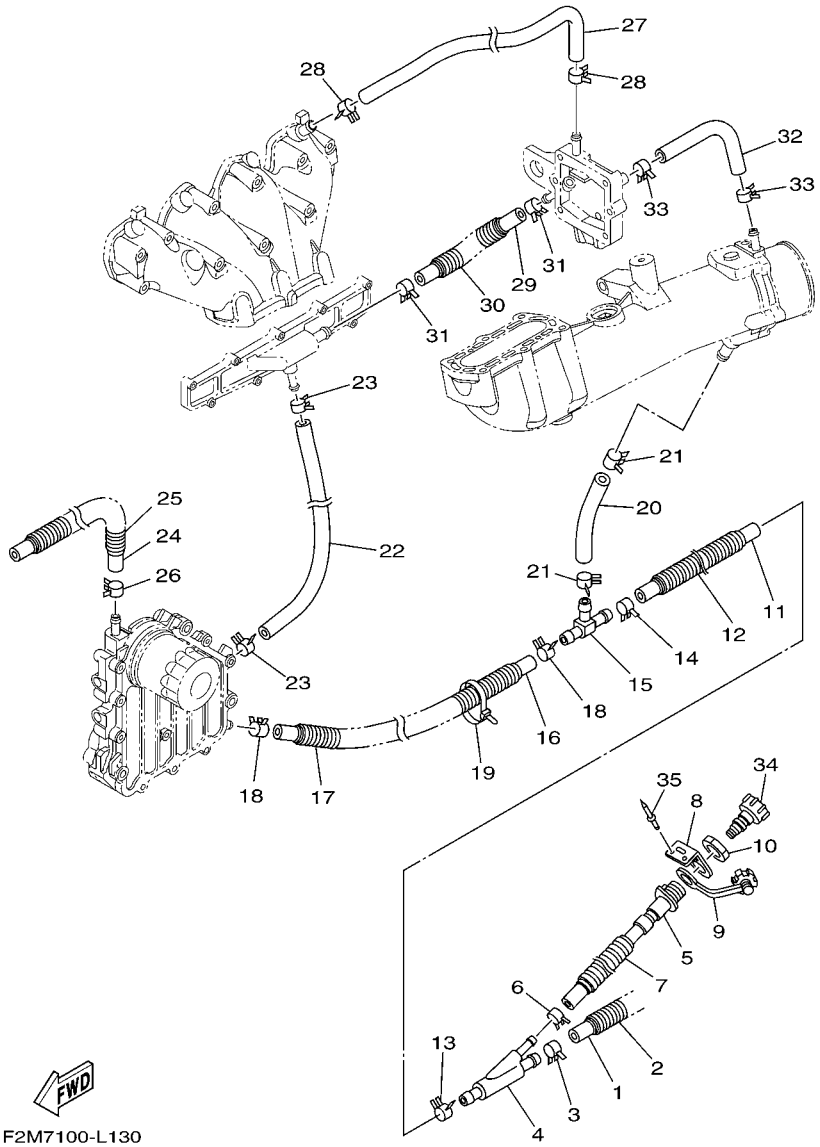

FIG. 13 EXHAUST 2

REF. NO.	PART NO.	DESCRIPTION	CAN	EUR				REMARKS
28	90467–160A0	CLIP	2	2				
29	6S5–12579–00	HOSE 4	1	1				
30	90447–19011	TUBE (L150)	1	1				
31	90467–160A0	CLIP	2	2				
32	90445–16013	HOSE (L220)	1	1				
33	90467–160A0	CLIP	2	2				
34	67X–E2590–10	CONDUCTION ASSY	1	1				
35	90267–489U1	RIVET,BLIND	2	2				

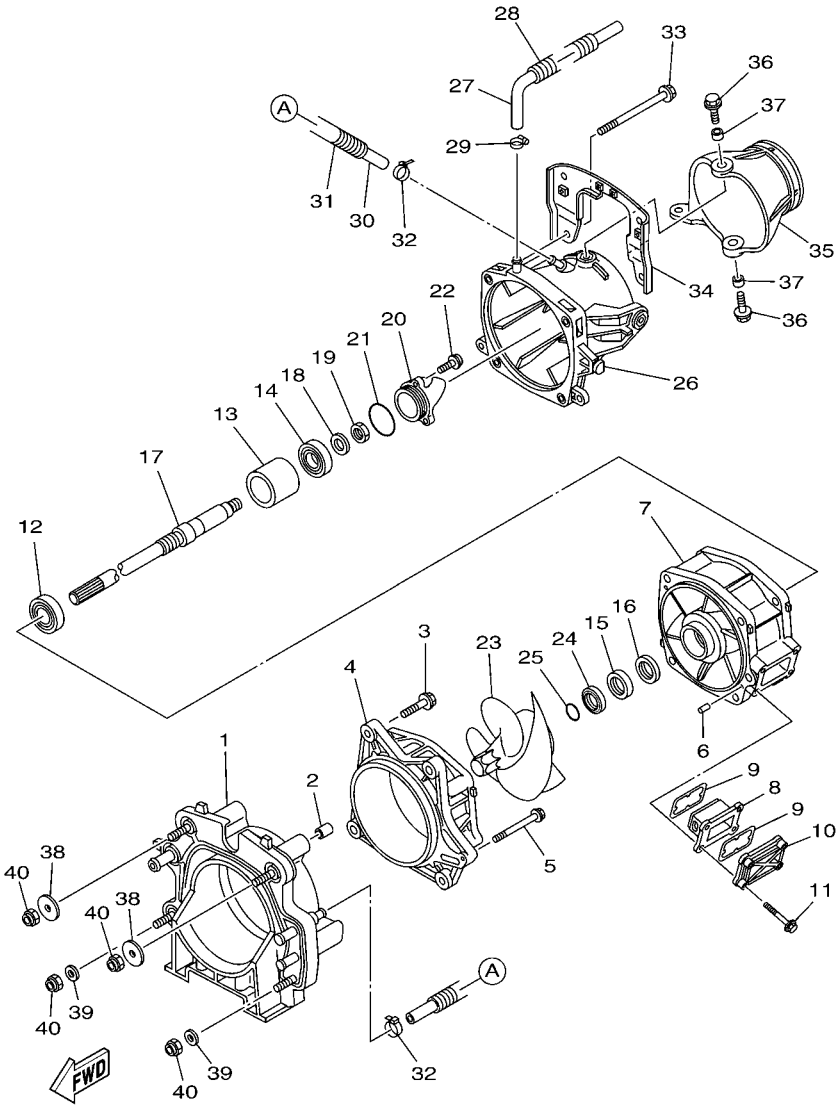

FIG. 14 JET UNIT 1

REF. NO.	PART NO.	DESCRIPTION	CAN	EUR				REMARKS
1	6AN–G5831–00	PLATE, TRANSOM	1	1				
2	99590–14016	PIN, DOWEL	2	2				
3	90119–10810	BOLT, WITH WASHER	4	4				
4	66V–51312–01–94	HOUSING, IMPELLER	1	1				
5	90119–06893	BOLT, WITH WASHER	1	1				
6	93606–12019	PIN, DOWEL	2	2				
7	6S5–51315–00–94	DUCT, IMPELLER	1	1				
8	6AN–G6882–00	FILTER	1	1				
9	66V–42414–00	O-RING	2	2				
10	6AN–G5214–00–94	COVER, WATER INLET 1	1	1				
11	90119–06897	BOLT, WITH WASHER	4	4				
12	93306–20654	BEARING	1	1				
13	6S5–45538–00	SPACER 1	1	1				
14	93306–30582	BEARING	1	1				
15	93102–31009	OIL SEAL	1	1				
16	93101–31001	OIL SEAL	1	1				
17	6S5–45511–00	SHAFT, DRIVE	1	1				
18	9290P–20600	WASHER	1	1				
19	90170–20802	NUT	1	1				
20	6AN–R1326–00–94	CAP	1	1				
21	6S5–5111K–00	O-RING 1	1	1				
22	90110–06822	BOLT, HEXAGON SOCKET HEAD	3	3				
23	6AP–R1321–01	IMPELLER	1	1				
24	6BH–51348–01	SPACER	1	1				
25	93210–30611	O-RING	1	1				
26	6BU–R1318–00	NOZZLE	1	1				
27	6CN–U72M2–00	HOSE 1	1	1				

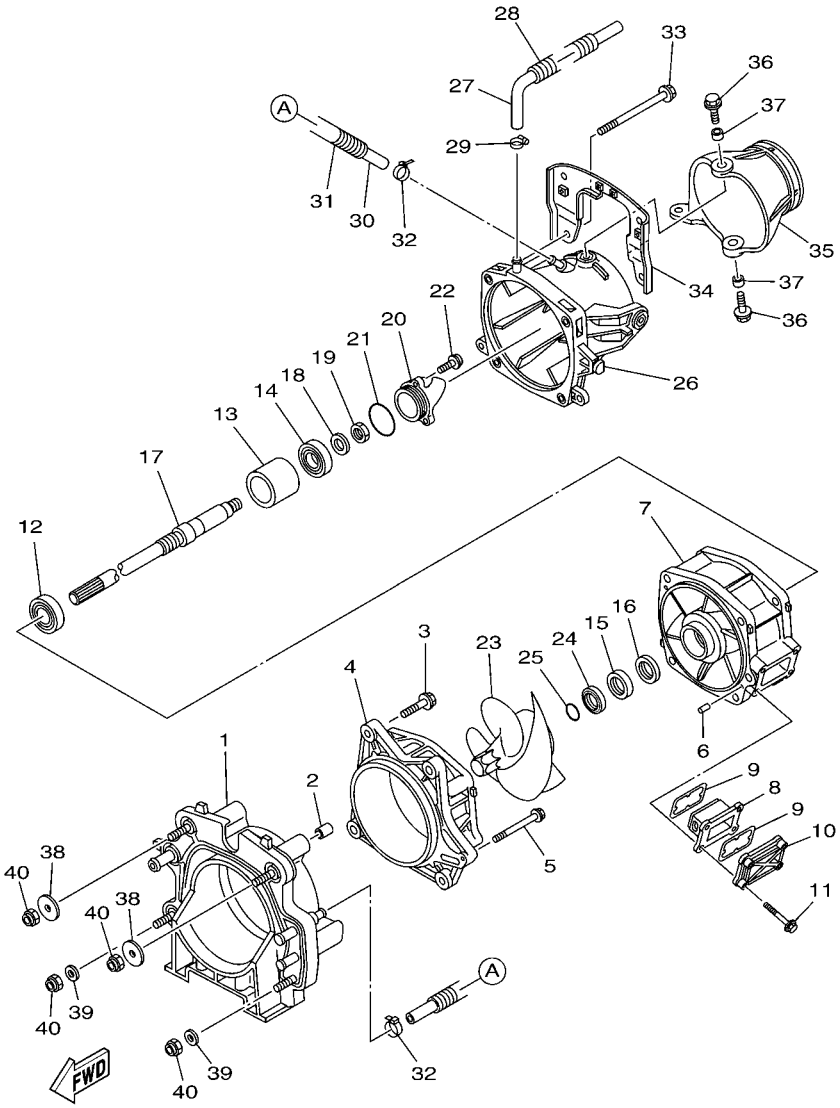

FIG. 14 JET UNIT 1

REF. NO.	PART NO.	DESCRIPTION	CAN	EUR				REMARKS
28	90447–19022	TUBE	1	1				
29	90601–118UF	BAND, HOSE 18	1	1				
30	90445–14807	HOSE (L355)	1	1				
31	90446–20MF5	HOSE (L320)	1	1				
32	90465–11829	CLAMP	2	2				
33	90119–10806	BOLT, WITH WASHER	4	4				
34	6D3–R1341–00	BRACKET 1	1	1				
35	6BU–R1313–00–94	NOZZLE, DEFLECTOR	1	1				
36	90119–08840	BOLT, WITH WASHER	2	2				
37	90387–08M06	COLLAR	2	2				
38	F1S–U725E–01	WASHER	2	2				
39	90201–10801	WASHER, PLATE	2	2				
40	9572R–10300	NUT, NYLON	4	4				

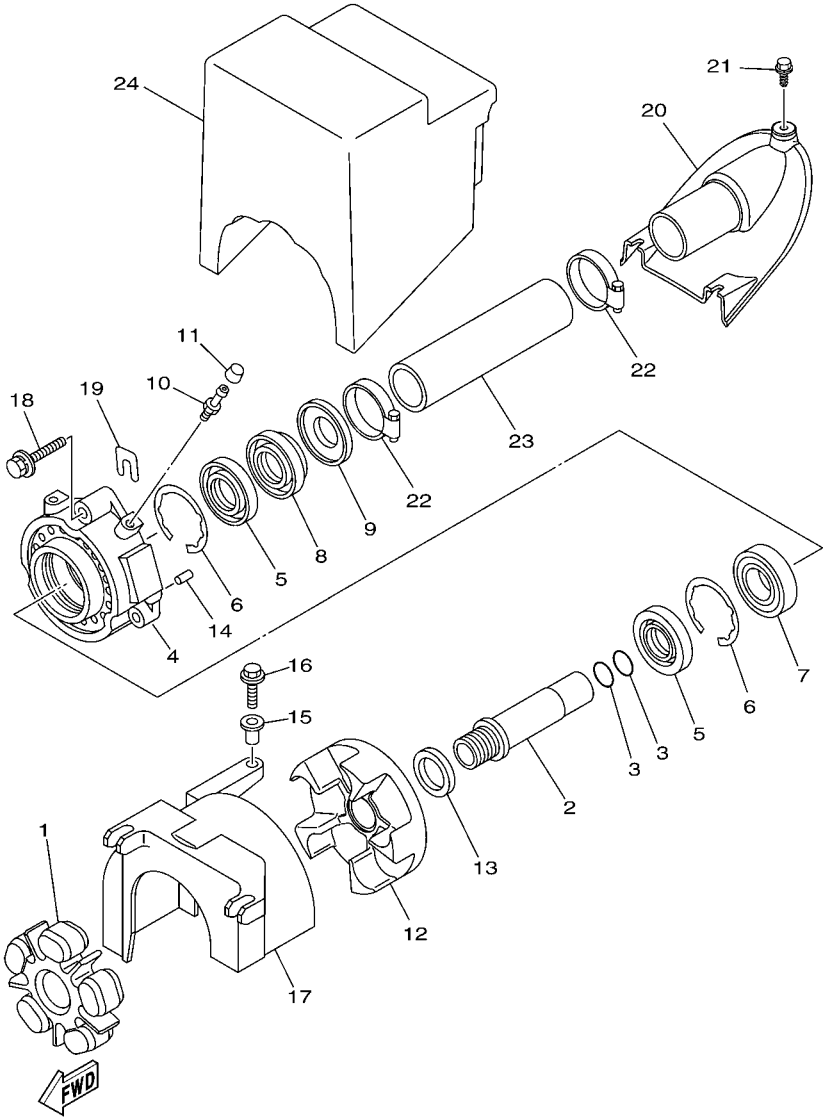

F2M7100-L150

FIG. 15 JET UNIT 2

REF. NO.	PART NO.	DESCRIPTION	CAN	EUR				REMARKS
1	6BH–4581J–00	RUBBER SHAFT COUPLING	1	1				
2	6S5–51323–00	SHAFT, COUPLER	1	1				
3	93210–22MF1	O-RING	2	2				
4	6S5–45332–00–94	HOUSING, BEARING	1	1				
5	93102–29008	OIL SEAL	2	2				
6	93450–66156	CIRCLIP	2	2				
7	93306–20655	BEARING	1	1				
8	93102–29009	OIL SEAL	1	1				
9	6S5–45613–10	WASHER, THRUST	1	1				
10	93700–06M03	NIPPLE, GREASE	1	1				
11	663–45119–00	CAP, GREASE NIPPLE	1	1				
12	6S5–45593–00–94	FLANGE, COUPLING 1	1	1				
13	6S5–12289–00	WASHER	1	1				
14	93606–12019	PIN, DOWEL	2	2				
15	90387–06M60	COLLAR	1	1				
16	90119–06891	BOLT, WITH WASHER	1	1				
17	6S5–R1381–01	COVER	1	1				
18	90119–089UU	BOLT, WITH WASHER	3	3				
19	GD0–U7249–00–05	SHIM (T=0.5)	2	2				UN
20	F2N–U883E–00	JOINT, PIPE	1	1				
21	90109–06832	BOLT	3	3				
22	90601–155U4	BAND, HOSE 55	2	2				
23	F2C–U883B–00	PIPE, 1	1	1				
24	F1K–U892D–00	FLOTATION, STERN	1	1				

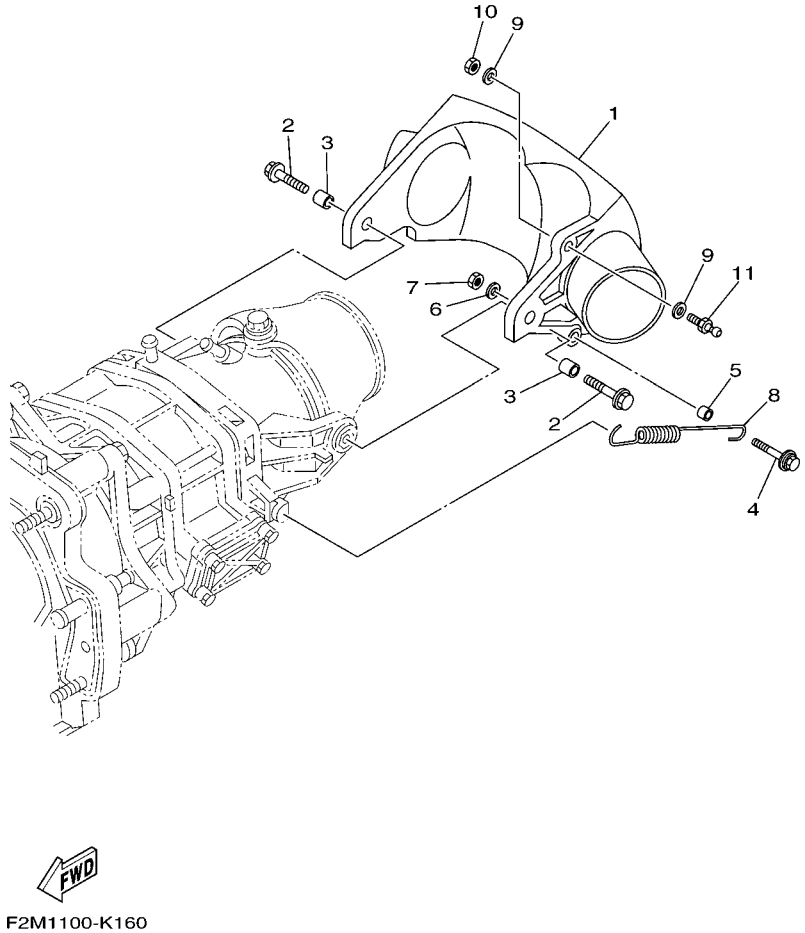

FIG. 16 JET UNIT 3

REF. NO.	PART NO.	DESCRIPTION	CAN	EUR				REMARKS
1	6D3–R1314–00	GATE, REVERSE	1	1				
2	90119–08840	BOLT, WITH WASHER	2	2				
3	90387–08M30	COLLAR	2	2				
4	90119–069UX	BOLT, WITH WASHER	1	1				
5	90387–06M30	COLLAR	1	1				
6	90201–06801	WASHER, PLATE	1	1				
7	9538R–06600	NUT	1	1				
8	6D3–52358–00	SPRING, RETAINER	1	1				
9	90201–06801	WASHER, PLATE	2	2				
10	9538R–06600	NUT	1	1				
11	EU0–U1461–02	STUD, JOINT BALL	1	1				

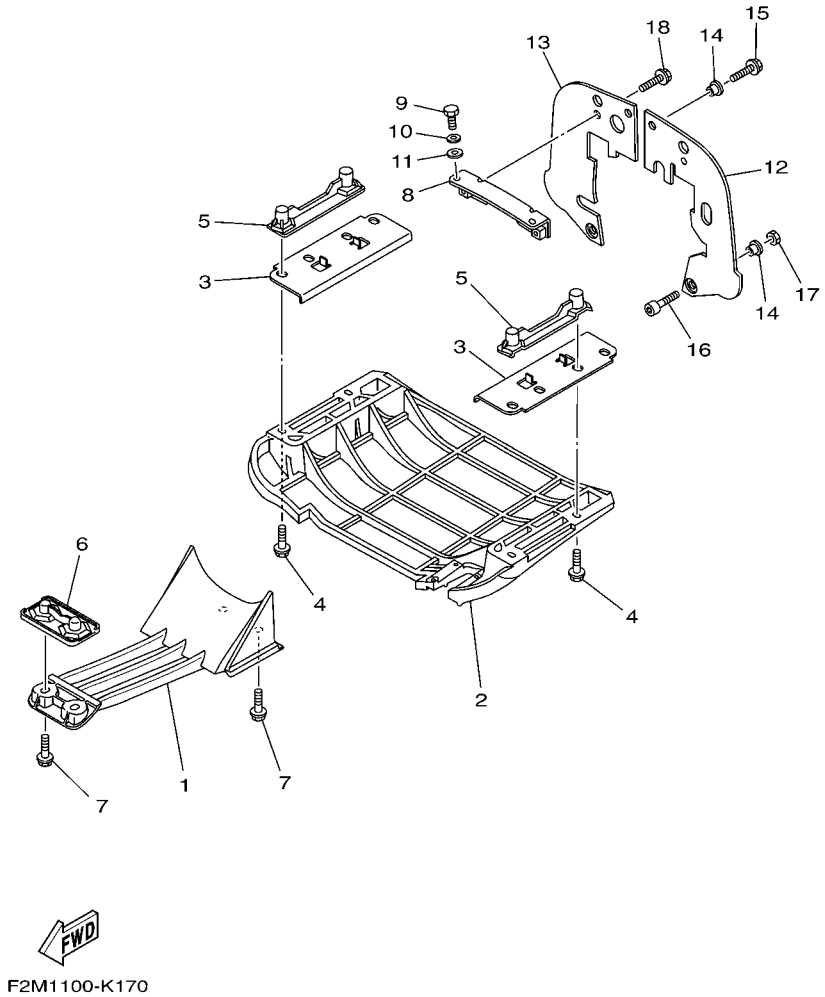

FIG. 17 JET UNIT 4

REF. NO.	PART NO.	DESCRIPTION	CAN	EUR				REMARKS
1	6CN–R1333–00	SCREEN, INTAKE	1	1				
2	F1K–U273B–06	PLATE 2	1	1				
3	F2M–U143G–00	SPACER	2	2				
4	90119–08829	BOLT, WITH WASHER	4	4				
5	F1G–U8572–02	BRACKET 2	2	2				
6	F2C–U8577–03	BRACKET, 3	1	1				
7	90119–10809	BOLT, WITH WASHER	4	4				
8	F1K–U7557–01	BRACKET	1	1				
9	90109–08041	BOLT	2	2				
10	92990–12200	WASHER, PLAIN	2	2				
11	90430–12002	GASKET	2	2				
12	F1K–U757E–01	PLATE, RUBBER 1	1	1				
13	F1K–U757F–01	PLATE, RUBBER 2	1	1				
14	90387–06080	COLLAR	6	6				
15	90119–06880	BOLT, WITH WASHER	4	4				
16	90101–069U0	BOLT	2	2				
17	9572R–06300	NUT, NYLON	2	2				
18	90119–08800	BOLT, WITH WASHER	2	2				

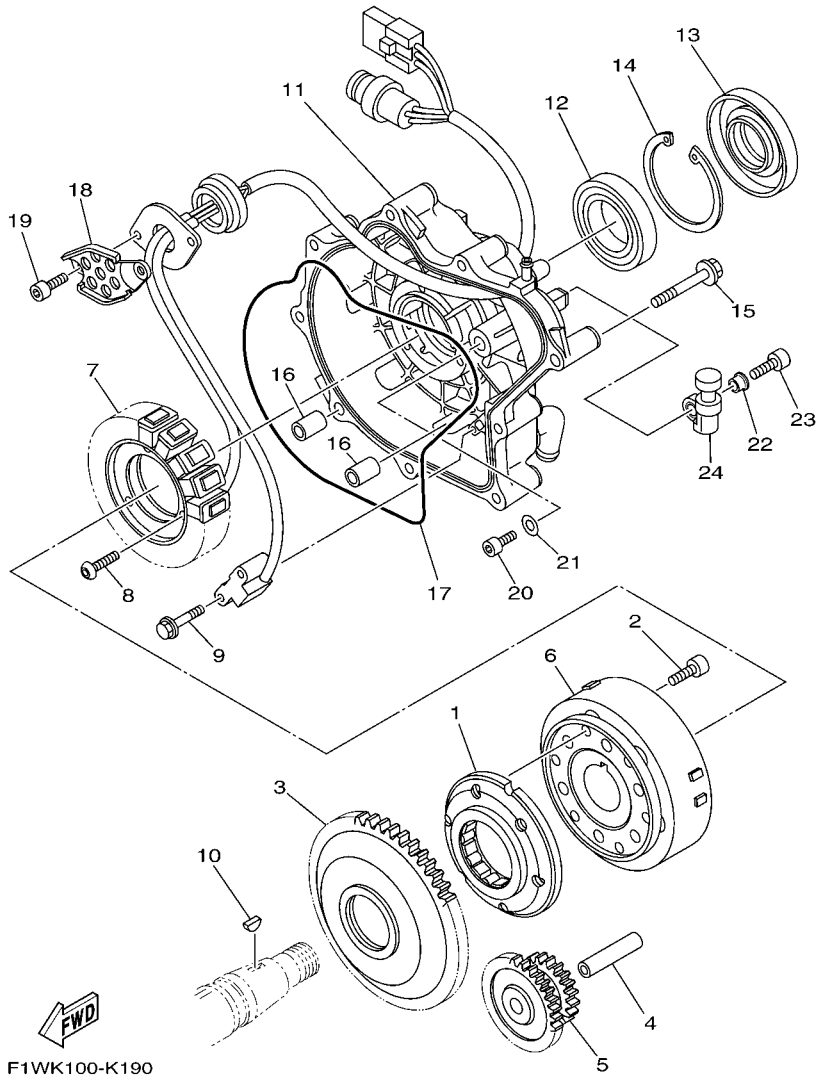

FIG. 18 GENERATOR

REF. NO.	PART NO.	DESCRIPTION	CAN	EUR				REMARKS
1	6S5–15590–00	STARTER ONE-WAY ASSY	1	1				
2	90110–08212	BOLT, HEXAGON SOCKET HEAD	6	6				
3	6S5–15515–00	GEAR 3	1	1				
4	6S5–15521–00	SHAFT 1	1	1				
5	6S5–15517–00	GEAR, IDLER 2	1	1				
6	6S5–81450–01	ROTOR ASSY	1	1				
7	6S5–81410–00	STATOR ASSY	1	1				
8	90149–06229	SCREW	3	3				
9	97513–05514	BOLT, WITH WASHER	2	2				
10	90280–03047	KEY, WOODRUFF	1	1				
11	6S5–81337–20	COVER, FLYWHEEL	1	1				
12	93306–00805	BEARING	1	1				
13	6S5–81167–10	OIL SEAL	1	1				
14	99009–72500	CIRCLIP	1	1				
15	95024–08050	BOLT, FLG.(SMALL HEAD)	9	9				
16	99530–10114	PIN, DOWEL	2	2				
17	6S5–81168–00	O-RING	1	1				
18	6S5–81328–00	CLAMP	1	1				
19	91317–06014	BOLT	2	2				
20	91317–05010	BOLT	1	1				
21	90201–052E8	WASHER, PLATE	1	1				
22	90387–06M05	COLLAR	2	2				
23	91380–06020	BOLT	2	2				
24	6S5–81364–10	GROMMET	2	2				

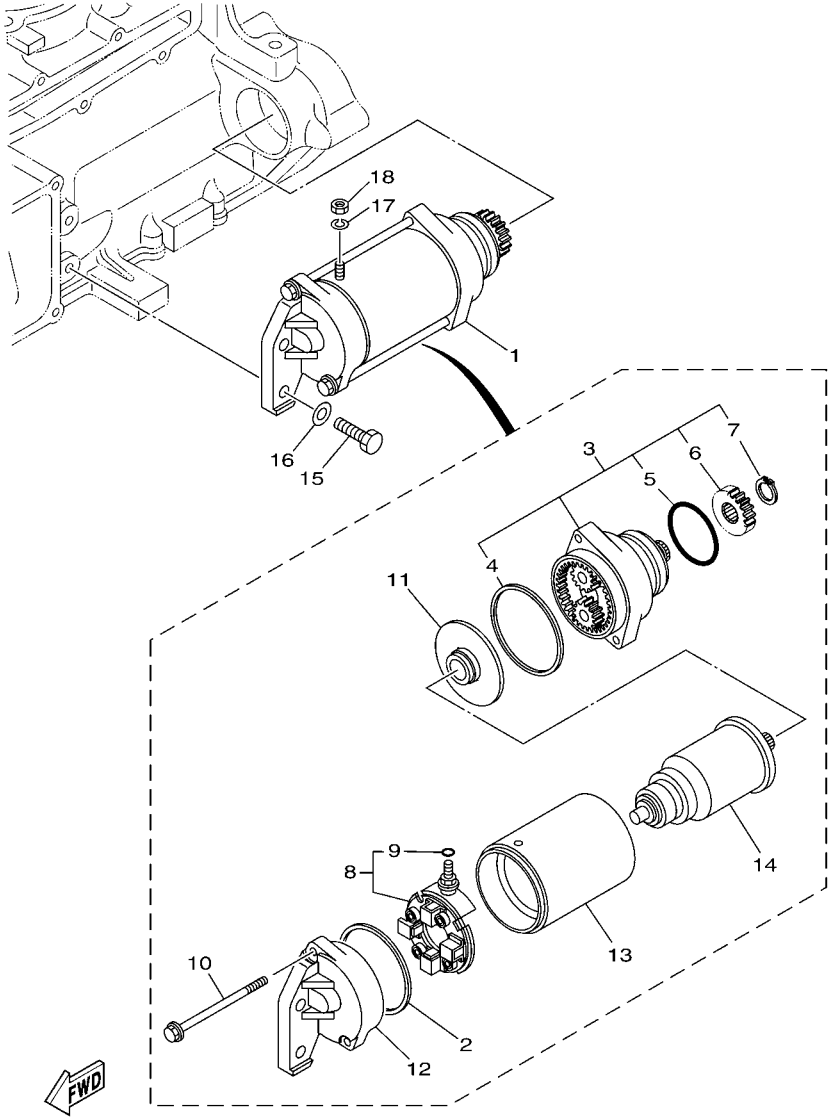

F1W1100-G200

FIG. 19 STARTING MOTOR

REF. NO.	PART NO.	DESCRIPTION	CAN	EUR				REMARKS
1	6S5–81800–00	STARTING MOTOR ASSY	1	1				
2	11H–81844–00	.GASKET	1	1				
3	6S5–81830–00	.FRONT BRACKET ASSY	1	1				
4	4G0–81844–00	..GASKET	1	1				
5	1J7–81847–60	..O-RING	1	1				
6	5EL–15511–00	..GEAR, STARTING MOTOR	1	1				
7	93410–12003	..CIRCLIP	1	1				
8	6S5–81840–00	.BRUSH HOLDER ASSY	1	1				
9	3TB–81847–00	..O-RING	1	1				
10	6S5–81826–00	.BOLT	2	2				
11	5EL–81845–00	.PLATE	1	1				
12	6S5–81820–00	.REAR BRACKET ASSY	1	1				
13	6S5–81810–00	.STATOR ASSY	1	1				
14	5A8–81850–10	.ARMATURE ASSY	1	1				
15	97013–08030	BOLT	2	2				
16	92903–08600	WASHER, PLATE	2	2				
17	92990–06100	WASHER, SPRING	1	1				
18	95380–06700	NUT	1	1				

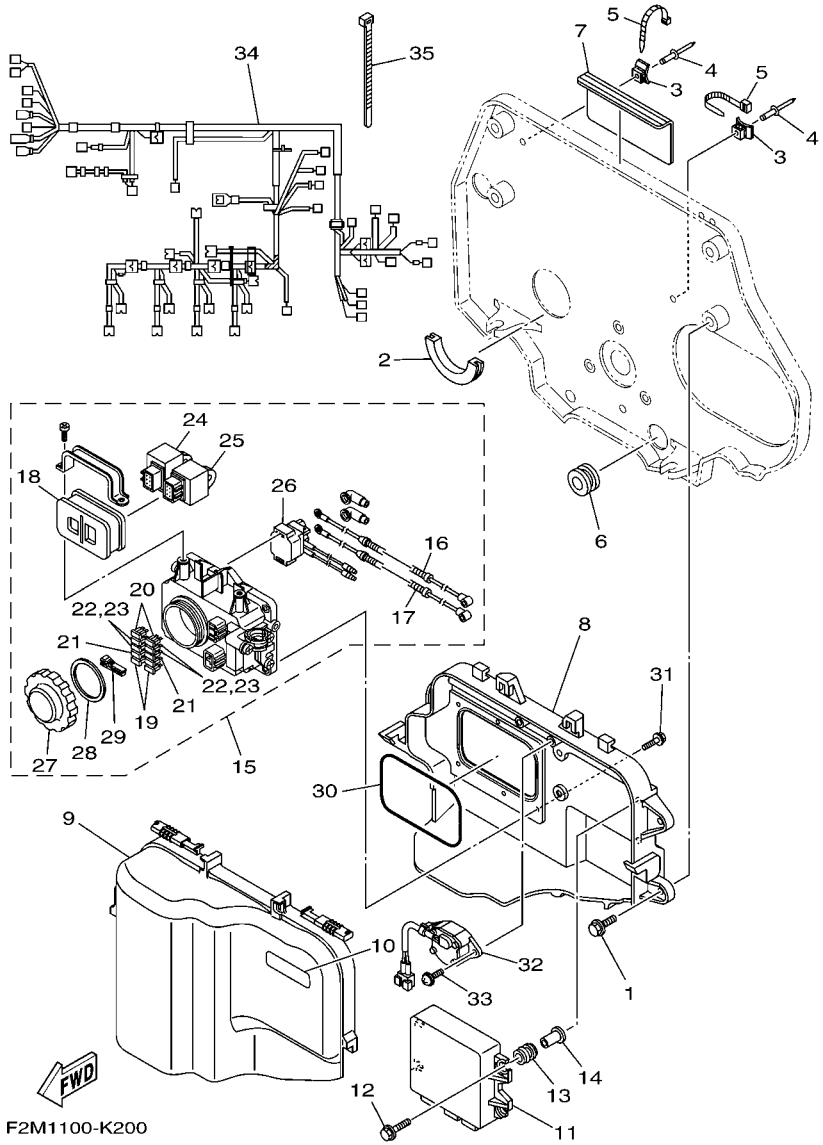

FIG. 20 ELECTRICAL 1

REF. NO.	PART NO.	DESCRIPTION	CAN	EUR				REMARKS
1	90119–089UT	BOLT, WITH WASHER	4	4				
2	F1S–U828H–01	TRIM, 1	1	1				
3	F1W–U828M–00	BASE, CLAMP	2	2				
4	90267–48802	RIVET, BLIND	2	2				
5	90464–32801	CLAMP	2	2				
6	90480–38800	GROMMET	1	1				
7	F1S–U8221–00	PAD, BATTERY	1	1				
8	6BH–81845–00	PLATE	1	1				
9	6S5–81942–10	COVER	1	1				
10	60E–83627–00	LABEL, CAUTION 7	1	1				
11	6CN–8591A–10	ENGINE CONTROL UNIT ASSY	1	1				
12	90119–06M35	BOLT, WITH WASHER	4	4				
13	6A0–82317–00	DAMPER, IGNITION COIL	4	4				
14	90387–06119	COLLAR	4	4				
15	6BH–82170–00	FUSE BOX ASSY	1	1				
16	6S5–82115–00	.WIRE, PLUS LEAD	1	1				
17	6S5–82117–00	.WIRE, LEAD	1	1				
18	6D3–82157–00	.DAMPER	1	1				
19	67F–82151–00	.FUSE (20A)	2	2				
20	67F–82151–10	.FUSE (30A)	2	2				
21	67F–82151–30	.FUSE (3A)	2	2				
22	67F–82151–40	.FUSE (10A)	2	2				
23	67F–82151–40	.FUSE (10A)	2	2				
24	60E–81950–00	.RELAY ASSY	1	1				
25	68V–81950–00	.RELAY ASSY	1	1				
26	6B6–81940–00	.STARTER RELAY ASSY	1	1				
27	66V–8132W–00	.CAP	1	1				

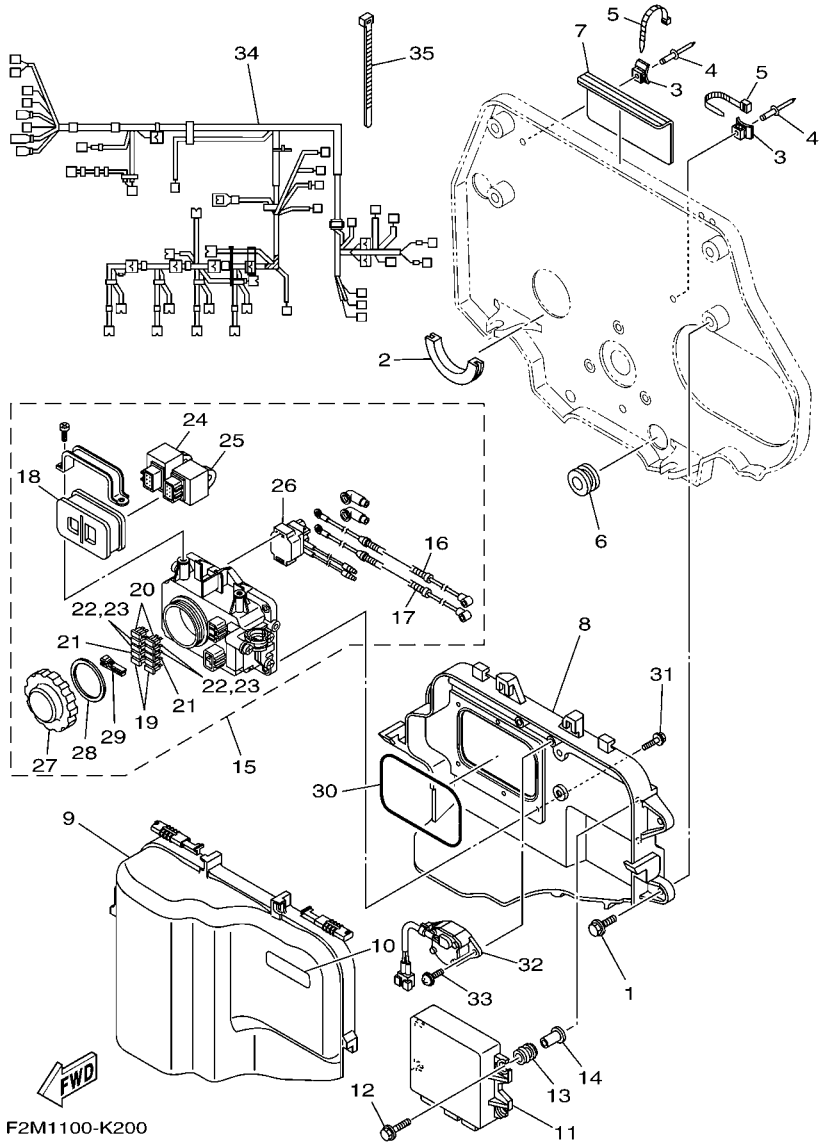

FIG. 20 ELECTRICAL 1

REF. NO.	PART NO.	DESCRIPTION	CAN	EUR				REMARKS
28	66V–81844–00	.GASKET	1	1				
29	67F–2812A–00	.PULLER, FUSE	1	1				
30	6BH–81847–00	O-RING	1	1				
31	90119–06091	BOLT, WITH WASHER	6	6				
32	6S5–8259E–00	SWITCH ASSY	1	1				
33	97780–60520	SCREW, TAPPING	2	2				
34	6CN–8259L–00	WIRE HARNESS ASSY 1	1	1				
35	90465–14M66	CLAMP	3	3				

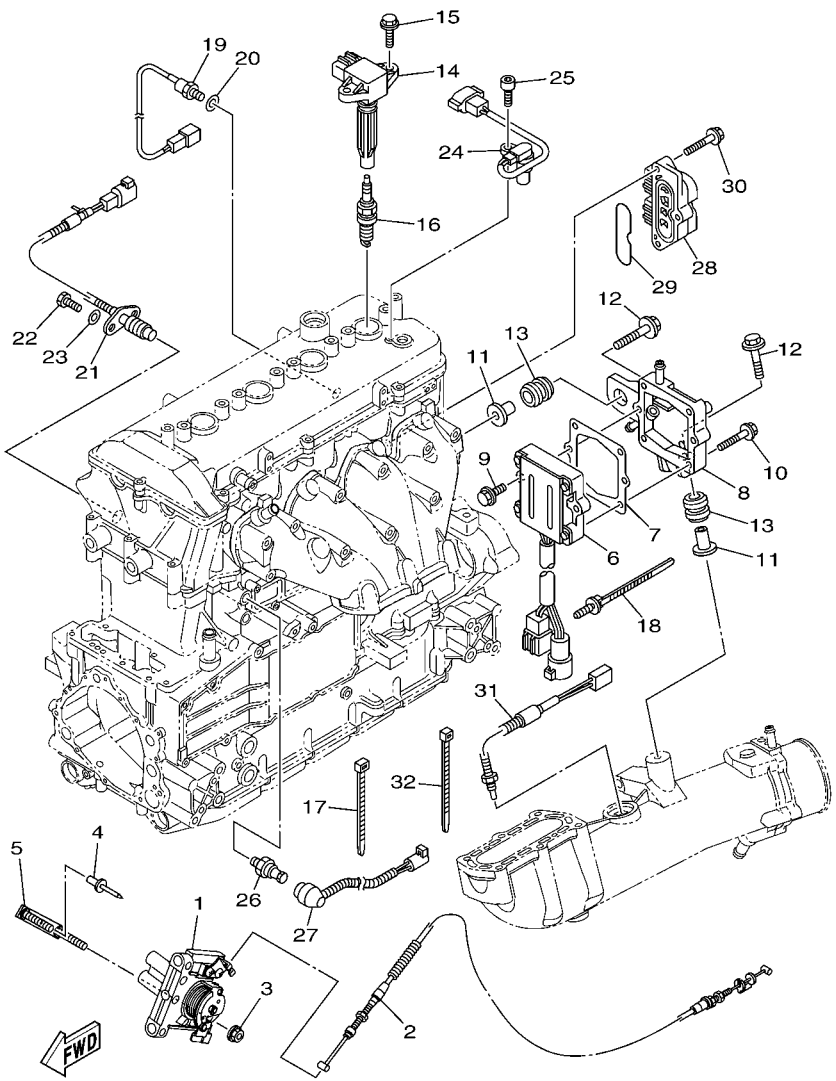

FIG. 21 ELECTRICAL 2

REF. NO.	PART NO.	DESCRIPTION	CAN	EUR				REMARKS
1	6D3–14305–21	ACCEL. POSITON SENSOR ASSY	1	1				
2	6BU–26311–00	CABLE, THROTTLE 1	1	1				
3	95780–08300	NUT, FLANGE	2	2				
4	90267–489U1	RIVET,BLIND	1	1				
5	F2N–U7254–00	BRACKET, THROTTLE	1	1				
6	6S5–81960–00	RECTIFIER & REGULATOR ASSY	1	1				
7	6S5–81975–00	PLATE, RECTIFIER FITTING	1	1				
8	6S5–81972–01–94	COVER, RECTIFIER	1	1				
9	90119–06MA3	BOLT, WITH WASHER	2	2				
10	90119–06048	BOLT, WITH WASHER	4	4				
11	6D3–14495–00	COLLAR	2	2				
12	90119–08M22	BOLT, WITH WASHER	2	2				
13	90480–22M15	GROMMET	2	2				
14	6S5–82310–00	IGNITION COIL ASSY	4	4				
15	90105–06903	BOLT, FLANGE	8	8				
16	94702–00427	PLUG, SPARK (NGK LFR6A)	4	4				
17	90465–13M18	CLAMP	4	4				
18	90464–31001	CLAMP	1	1				
19	61A–85790–00	THERMOSENSOR ASSY	1	1				
20	92990–10600	WASHER, PLATE	1	1				
21	60E–82560–01	THERMO SWITCH ASSY	1	1				
22	97095–06016	BOLT	2	2				
23	92995–06600	WASHER	2	2				
24	6D3–85896–00	SENSOR, CAM POSITION	1	1				
25	91380–06016	BOLT	1	1				
26	68V–82504–00	OIL PRESSURE SWITCH ASSY	1	1				
27	6S5–81315–00	LEAD WIRE ASSY	1	1				

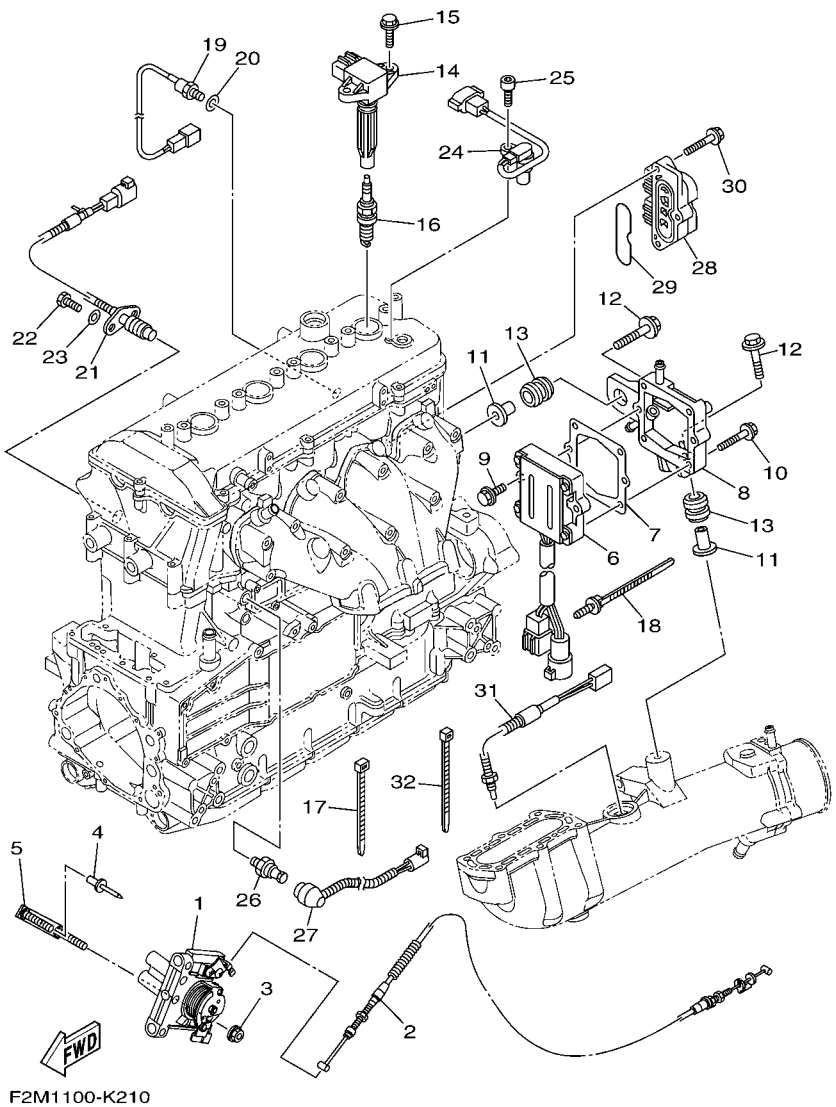

FIG. 21 ELECTRICAL 2

REF. NO.	PART NO.	DESCRIPTION	CAN	EUR				REMARKS
28	6D3–8273J–01	EARTH PLATE COMP.	1	1				
29	93210–60ME8	O-RING	1	1				Go to P/N : PE0-WV-120008
30	90119–06048	BOLT, WITH WASHER	3	3				
31	6AA–85790–00	THERMOSENSOR ASSY	1	1				
32	90464–31001	CLAMP	1	1				

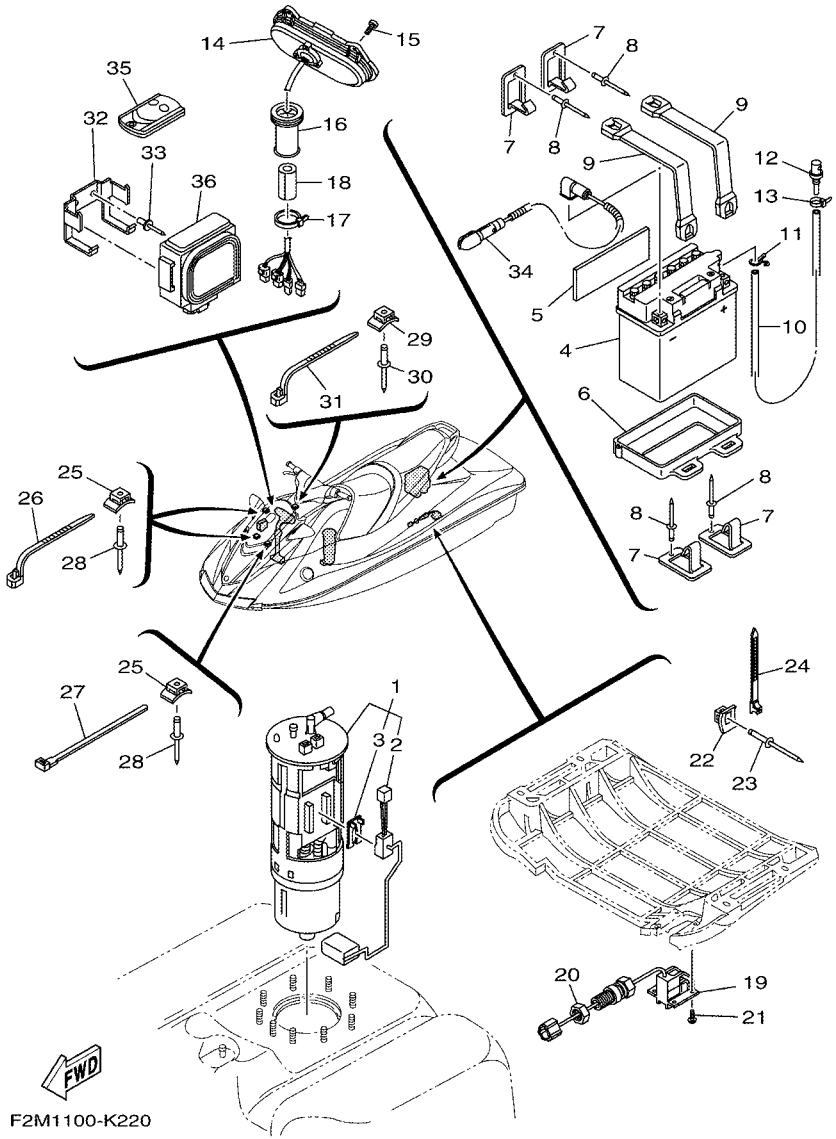

FIG. 22 ELECTRICAL 3

REF. NO.	PART NO.	DESCRIPTION	CAN	EUR				REMARKS
1	6S5–13907–00	FUEL PUMP COMP.	1	1				
2	6S5–682E0–00	.FUEL SENDER ASSY	1	1				
3	60E–82556–00	.DAMPER, STOPPER	1	1				
4	EU0–82110–09	BATTERY ASSY (YB16CL-B)	1	1				YUASA
5	F1K–U8221–00	PAD, BATTERY	1	1				
6	F1K–U8211–01	CASE, BATTERY	1	1				
7	F1K–U5772–04	HOOK A	4	4				
8	90267–489U1	RIVET,BLIND	4	4				
9	F1K–U821D–01	BAND, BATTERY 1	2	2				
10	F0D–U785G–10	HOSE, AIR VENT	1	1				
11	90467–089U1	CLIP	1	1				
12	GJ3–6215F–00	NIPPLE	1	1				
13	90465–11829	CLAMP	1	1				
14	F1K–6820A–20	METER ASSY	1	1				
15	90111–05008	BOLT,HEX. SOCKET BUTTON	4	4				
16	GU2–6822E–01	GROMMET	1	1				
17	90464–32801	CLAMP	1	1				
18	GJ1–U7578–21	PACKING, HOSE 2	1	1				
19	F1S–U8K31–02	SENSOR SPEED	1	1				
20	F2C–U151S–00	NUT	1	1				
21	90150–05807	SCREW, ROUND HEAD	4	4				
22	F1W–U828M–00	BASE, CLAMP	7	7				
23	90267–489U6	RIVET, BLIND	7	7				
24	90464–32801	CLAMP	7	7				
25	F1W–U828M–00	BASE, CLAMP	3	3				
26	90464–32801	CLAMP	1	1				
27	90601–200U2	BAND	2	2				

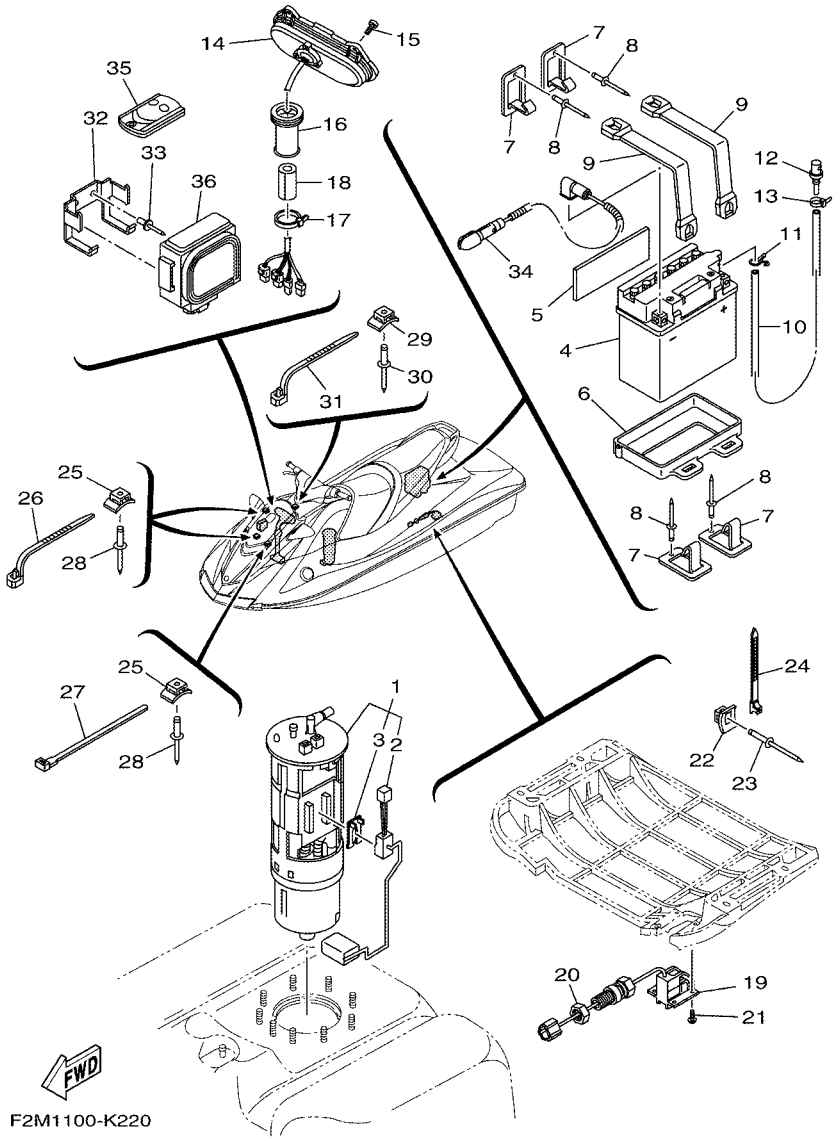

FIG. 22 ELECTRICAL 3

REF. NO.	PART NO.	DESCRIPTION	CAN	EUR				REMARKS
28	90267–489U6	RIVET, BLIND	3	3				
29	F1W–U828M–00	BASE, CLAMP	1	1				
30	90267–489U6	RIVET, BLIND	1	1				
31	90464–32801	CLAMP	1	1				
32	F1W–U826C–00	BRACKET	1	1				
33	90267–489U9	RIVET, BLIND	2	2				
34	6S5–82116–00	WIRE, MINUS LEAD	1	1				
35	6B6–86261–00	TRANSMITTER COMP	1					FOR CAN
	6B6–86261–10	TRANSMITTER COMP		2				FOR EUR
36	6B6–86265–00	RECIVER COMP	1					FOR CAN
	6B6–86265–10	RECIVER COMP		1				FOR EUR

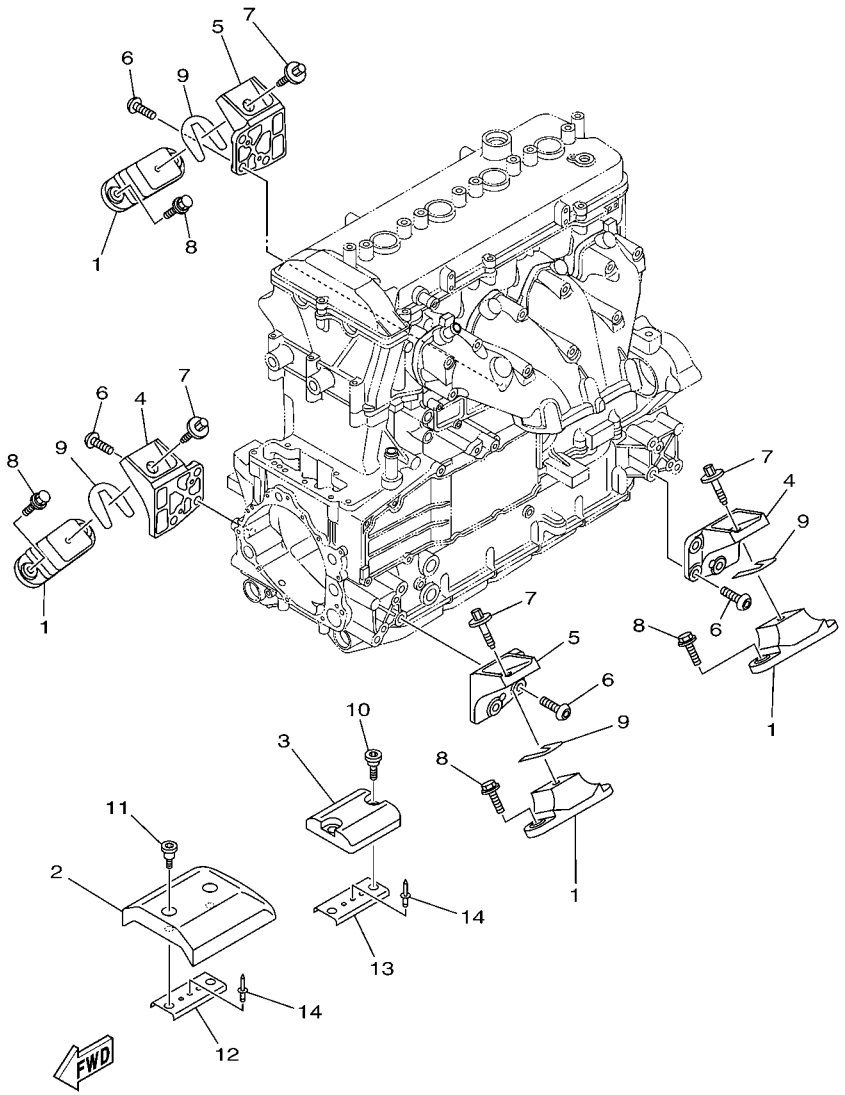

F2M1100-K230

FIG. 23 ENGINE MOUNT

REF. NO.	PART NO.	DESCRIPTION	CAN	EUR				REMARKS
1	67X–44517–10–94	MOUNT RUBBER	4	4				
2	6CN–G4532–00	STOPPER, UPPER MOUNT	1	1				
3	6CN–G4574–00	STOPPER, LOWER MOUNT RUBBER	1	1				
4	6BH–41661–00–94	BRACKET 1	2	2				
5	6BH–41662–00–94	BRACKET 2	2	2				
6	90149–10052	SCREW	12	12				
7	90119–08859	BOLT, WITH WASHER	4	4				
8	90119–08823	BOLT, WITH WASHER	8	8				
9	EU0–U7354–00–01	SHIM (T=0.1)	4	4				UN
	EU0–U7354–00–03	SHIM (T=0.3)	4	4				UN
	EU0–U7354–00–05	SHIM (T=0.5)	4	4				UN
	EU0–U7354–00–10	SHIM (T=1.0)	4	4				UN
	EU0–U7354–00–20	SHIM (T=2.0)	4	4				UN
10	90109–06875	BOLT	2	2				
11	90109–06874	BOLT	2	2				
12	F2M–U732B–00	PLATE	1	1				
13	F2M–U732B–00	PLATE	1	1				
14	90267–489U2	RIVET, BLIND	2	2				

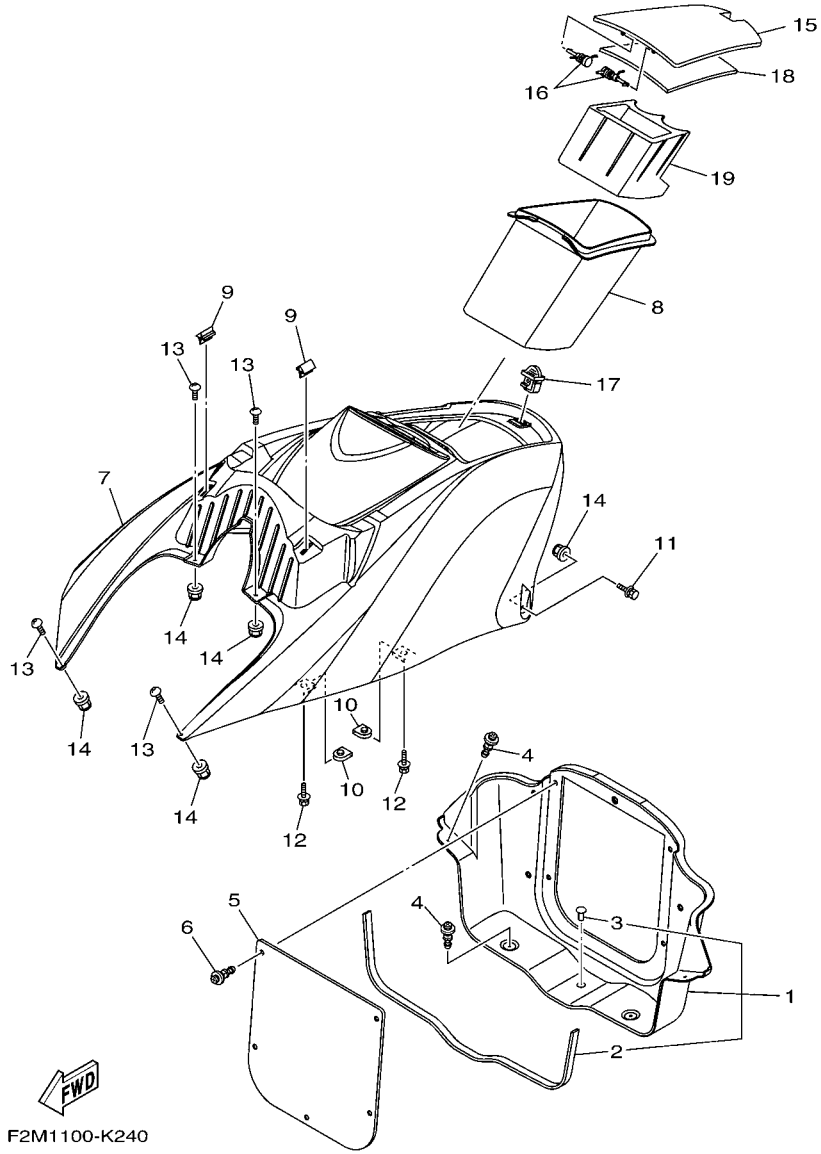

FIG. 24 ENGINE HATCH 1

REF. NO.	PART NO.	DESCRIPTION	CAN	EUR				REMARKS
1	F2N–U475B–03	LOCKER,BOW	1	1				
2	F2N–U266C–01	.PACKING 4	1	1				
3	90605–502U1	.PLUG, BLIND	1	1				
4	90269–08801	RIVET	4	4				
5	F1W–U475F–01	PLATE, LOKER BOW	1	1				
6	90269–08801	RIVET	5	5				
7	F2N–U516N–00–P9	COVER, ENGINE HATCH (DNMC)	1	1				FOR GRAY
	F2N–U516N–00–PA	COVER, ENGINE HATCH (DRMR)	1	1				FOR RED
8	F2N–U516P–00	BOX GLOVE	1	1				
9	F1K–U266C–00	PACKING 4	2	2				
10	90183–06902	NUT, SPRING	4	4				
11	90119–06880	BOLT, WITH WASHER	2	2				
12	90119–06882	BOLT, WITH WASHER	4	4				
13	F2N–67823–10	SCREW	4	4				
14	F2N–U142L–00	NUT, LOCK	6	6				
15	F2N–U517H–01	LID HATCH	1	1				
16	F0X–6517R–01	PIN, HINGE	2	2				
17	GU2–62875–01	LOCK	1	1				
18	F2N–U519D–00	PACKING CASE	1	1				
19	F2N–U5633–00	HOLDER, DRINK	1	1				

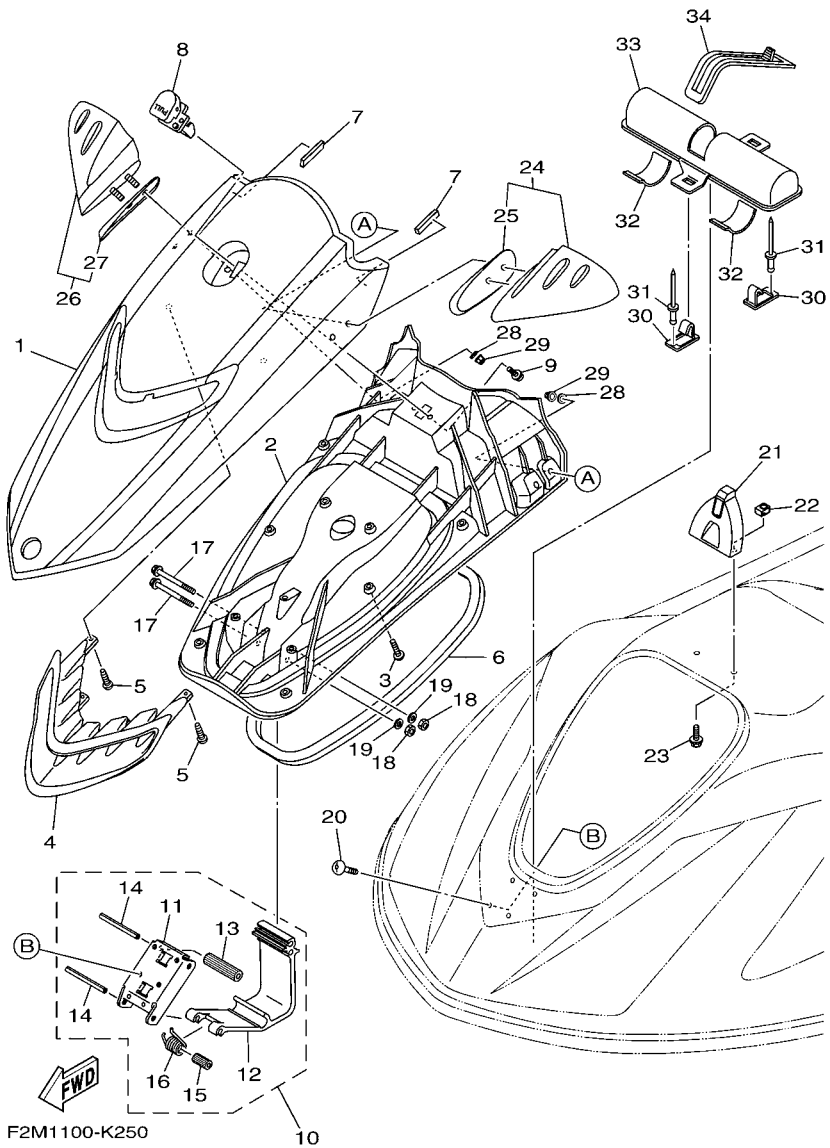

FIG. 25 ENGINE HATCH 2

REF. NO.	PART NO.	DESCRIPTION	CAN	EUR				REMARKS
1	F2M–U517B–00–P3	LID, ENGINE ROOM (DNMC)	1	1				FOR GRAY
	F2M–U517B–00–P4	LID, ENGINE ROOM (DRMR)	1	1				FOR RED
2	F2M–U213B–00	COVER,VENTILATOR 1	1	1				
3	90149–05903	SCREW	9	9				
4	F2M–U517V–00	ORNAMENT, CENTER	1	1				
5	90149–05903	SCREW	4	4				
6	F2N–U2663–01	PACKING 1	1	1				
7	F2C–U1743–00	PACKING	2	2				
8	F2M–6517C–00	LOCK, LID	1	1				
9	90119–059U4	BOLT, WITH WASHER	2	2				
10	F1K–U515A–00	HINGE ASSY.	1	1				
11	F1K–U518E–04	.PLATE, HINGE LID	1	1				
12	F1K–U517D–05	.HINGE, LID	1	1				
13	F1K–U135C–01	.ROLLER, DETENT	1	1				
14	F1K–U517R–00	.PIN, HINGE	2	2				
15	F1K–U471E–03	.SPACER 1	1	1				
16	F1K–U283B–02	.SPRING, TORSION	1	1				
17	90105–06826	BOLT, FLANGE	2	2				
18	9572R–06300	NUT, NYLON	2	2				
19	9299R–06200	WASHER	2	2				
20	F2N–67823–00	SCREW	4	4				
21	F2N–U517F–00	HOOK,LID LOCK	1	1				
22	F1X–U517E–01	NUT	2	2				
23	90119–06880	BOLT, WITH WASHER	2	2				
24	F2N–U596B–00	MIRROR LH	1	1				
25	F2N–U471E–00	.SPACER 1	1	1				
26	F2N–U596C–00	MIRROR RH	1	1				

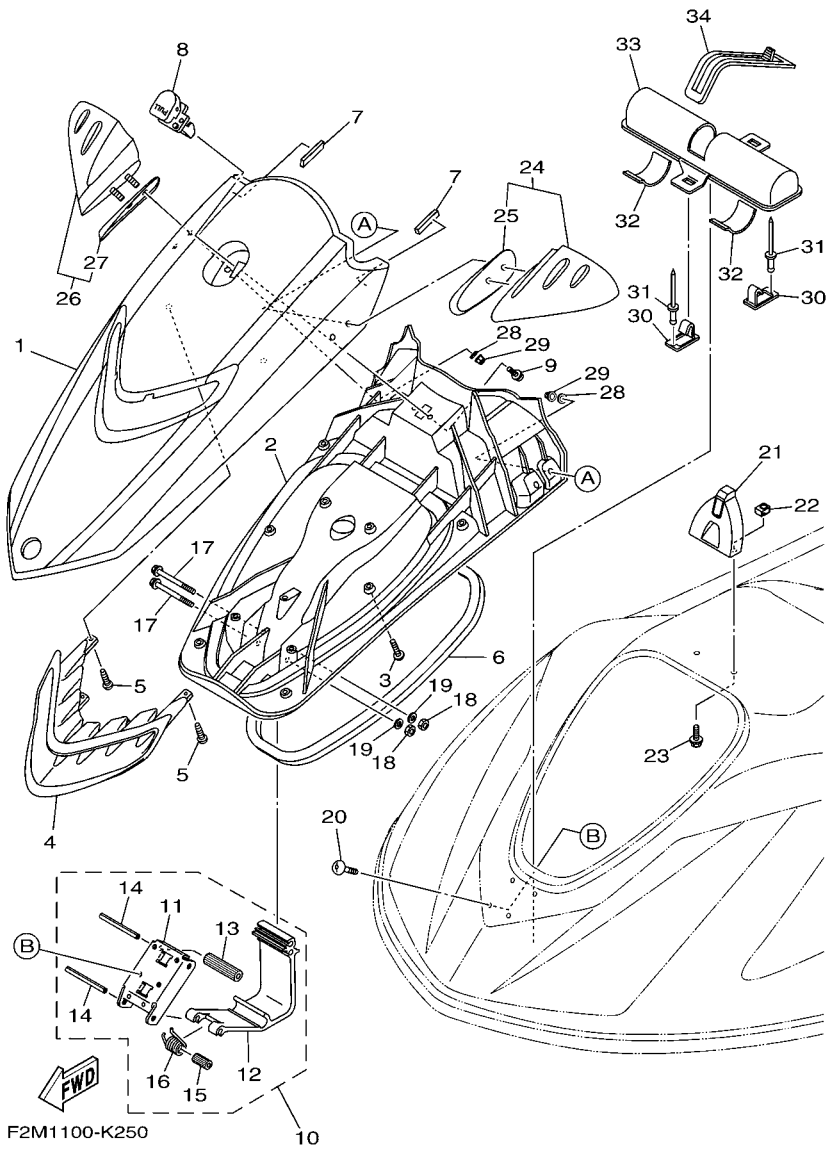

FIG. 25 ENGINE HATCH 2

REF. NO.	PART NO.	DESCRIPTION	CAN	EUR				REMARKS
27	F2N–U471F–00	.SPACER 2	1	1				
28	9299R–08200	WASHER	4	4				
29	9572R–08300	NUT, FLANGE	4	4				
30	F1K–U5772–04	HOOK A	2	2				
31	90267–489U1	RIVET,BLIND	2	2				
32	F1K–U759C–00	MAT 2	2	2				
33	F1K–U5983–01	BOX, FIRE EXTINGUISHER	1	1				
34	F1K–U828K–00	BAND, 1	1	1				

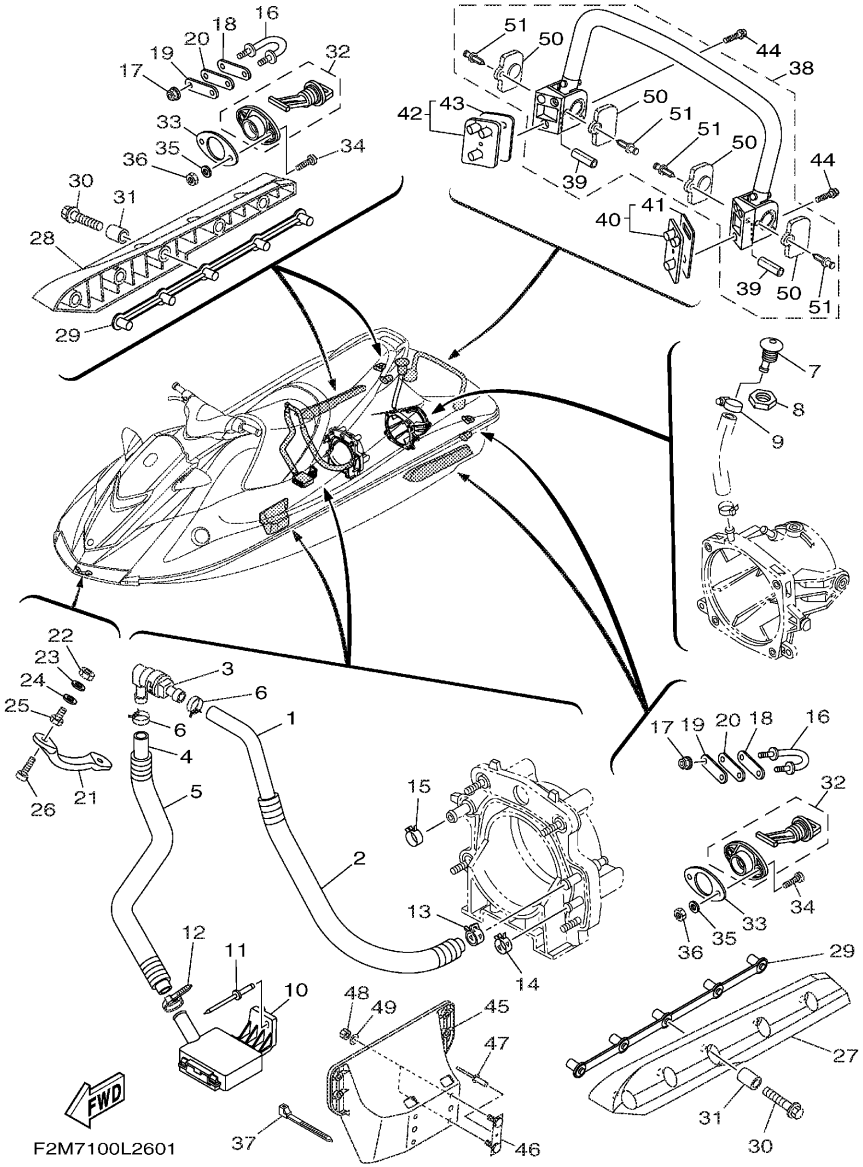

FIG. 26 HULL & DECK

REF. NO.	PART NO.	DESCRIPTION	CAN	EUR				REMARKS
1	90445–20804	HOSE (L860)	1	1				
2	90446–27M73	HOSE (L700)	1	1				
3	68N–5112T–00	JOINT, HOSE	1	1				
4	90445–20800	HOSE (L500)	1	1				
5	90446–27M55	TUBE (L400)	1	1				
6	90467–18804	CLIP	2	2				
7	F1W–U269B–00	SPOUT	1	1				
8	EU0–61652–00	NUT	1	1				
9	90601–118UF	BAND, HOSE 18	1	1				
10	F1B–U761D–02	STRAINER, BILGE	1	1				
11	90267–489U8	RIVET, BLIND	1	1				
12	90465–11829	CLAMP	1	1				
13	90467–21800	CLIP	1	1				
14	90467–200A0	CLIP	1	1				
15	90467–250A0	CLIP	1	1				
16	F2N–U1628–02	STERN EYE	2	2				
17	9572R–08300	NUT, FLANGE	4	4				
18	GP7–U4953–10	PLATE A	2	2				
19	F2C–U4953–10	PLATE A	2	2				
20	F1B–U1653–02	PACKING	2	2				
21	F1K–61624–00	BOWEYE 1	1	1				
22	99780–12600	NUT.HEX.(COARS)	2	2				
23	92990–12200	WASHER, PLAIN	2	2				
24	F0X–61637–00	WASHER	2	2				
25	F0X–61652–00	NUT (BOLT/NUT)	2	2				
26	90110–06040	BOLT, HEXAGON SOCKET HEAD	2	2				
27	F1S–U883N–01	STABILIZER LH	1	1				BLACK

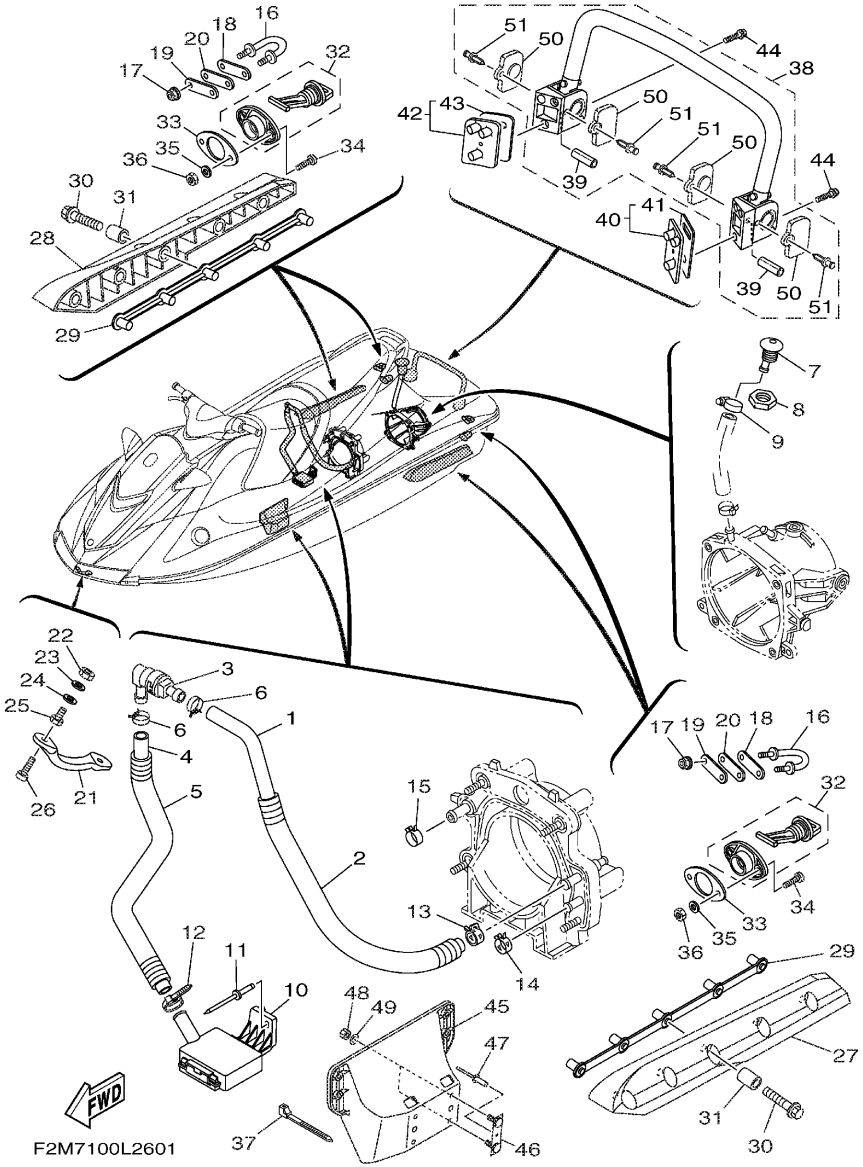

FIG. 26 HULL & DECK

REF. NO.	PART NO.	DESCRIPTION	CAN	EUR				REMARKS
28	F1S–U883P–01	STABILIZER RH	1	1				BLACK
29	F1X–U883T–01	BRACKET,STABILIZER	2	2				
30	90105–08860	BOLT, FLANGE	10	10				
31	F2N–U8169–00	SPACER	10	10				
32	F1S–U2280–01	DRAIN PLUG ASSY.	2	2				
33	F1S–U2285–00	PACKING, DRAIN	2	2				
34	9788R–05025	SCREW, PAN HEAD	4	4				
35	9299R–05200	WASHER	4	4				
36	9572R–05300	NUT, FLANGE	4	4				
37	90464–32801	CLAMP	1	1				
38	F2N–U278A–00	LADDER, STEP ASSY	1	1				
39	F1W–U771H–00	.SLEEVE 1	2	2				
40	F2L–U278F–01	BRACKET, LADDER LH	1	1				
41	F2L–U278H–00	.PACKING, BRKT. 1	1	1				
42	F2L–U278G–01	BRACKET, LADDER RH	1	1				
43	F2L–U278H–00	.PACKING, BRKT. 1	1	1				
44	90119–08844	BOLT, WITH WASHER	6	6				
45	F1W–U8572–01	BRACKET 2	1	1				
46	F1K–U826C–03	BRACKET	2	2				
47	90267–489U1	RIVET,BLIND	2	2				
48	9572R–08300	NUT, FLANGE	4	4				
49	9299R–08200	WASHER	4	4				
50	F2C-U377H-00	.SIDE COVER	4	4				
51	F2C-U1314-00	.PIN	4	4				

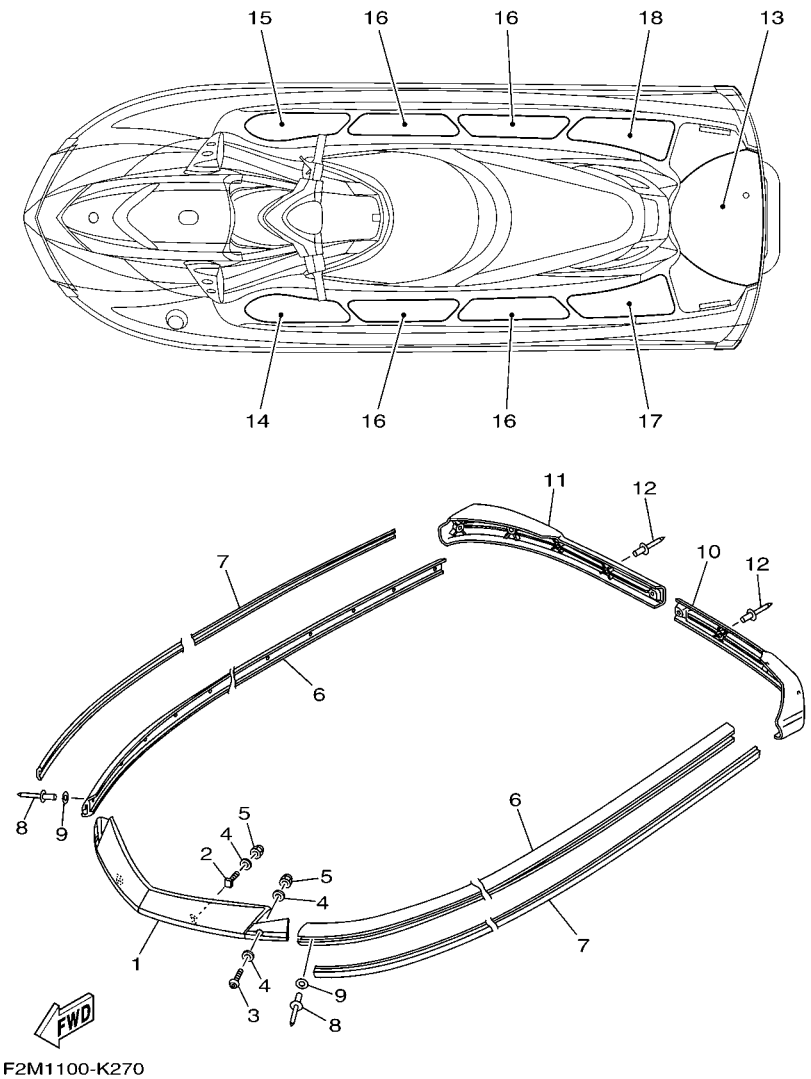

FIG. 27 GUNWALE & MAT

REF. NO.	PART NO.	DESCRIPTION	CAN	EUR				REMARKS
1	F2N–U2511–02	GUNWALE, BOW	1	1				
2	F1W–U491K–00	BOLT, SPECIAL	2	2				
3	90111–06803	BOLT,HEX. SOCKET BUTTON	2	2				
4	9299R–06200	WASHER	6	6				
5	9572R–06300	NUT, NYLON	4	4				
6	F1K–U2512–03	GUNWALE, SIDE	2	2				GRAY
7	F1K–U2519–20	INNER,GUNWALE	2	2				YAMAHA BLACK
8	90267–489U8	RIVET, BLIND	30	30				
9	9299R–05200	WASHER	30	30				
10	F1K–U251D–01	GUNWALE, STERN 1	1	1				GRAY
11	F1K–U251E–01	GUNWALE, STERN 2	1	1				GRAY
12	90267–48963	RIVET, BLIND	9	9				
13	F2N–U3581–00	MAT, UPPER	1	1				DARK GREY
14	F2N–U351H–00	MAT, STEP 1	1	1				DARK GREY
15	F2N–U351J–00	MAT, STEP 2	1	1				DARK GREY
16	F2N–U351K–00	MAT, STEP 3	4	4				DARK GREY
17	F2N–U351M–00	MAT, STEP 4	1	1				DARK GREY
18	F2N–U351N–00	MAT, STEP 5	1	1				DARK GREY

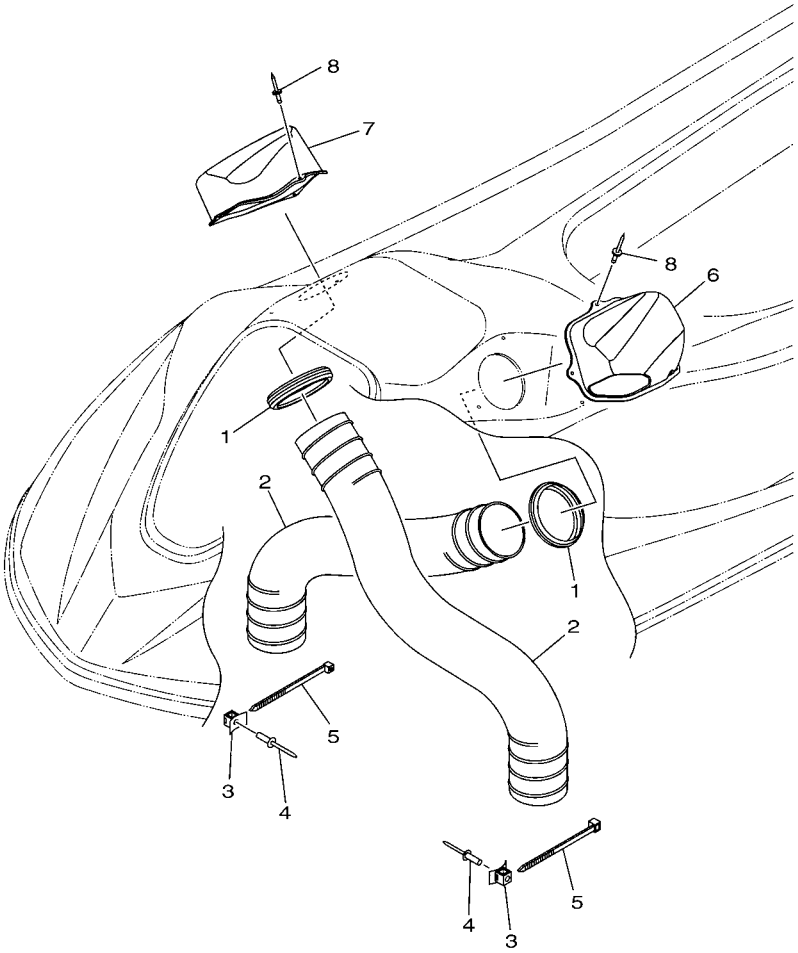

F2N1100-J250

FIG. 28 VENTILATION

REF. NO.	PART NO.	DESCRIPTION	CAN	EUR				REMARKS
1	F2N–U2127–00	BASE, AIR INTAKE	2	2				
2	F2N–U213G–01	HOSE, VENTILATOR 2	2	2				
3	F1W–U828M–00	BASE, CLAMP	2	2				
4	90267–489U6	RIVET, BLIND	2	2				
5	90464–99804	CLAMP	2	2				
6	F2N–U2187–00	BOX, INDUCTION 1	1	1				
7	F2N–U2188–00	BOX, INDUCTION 2	1	1				
8	90267–48806	RIVET, BLIND	6	6				

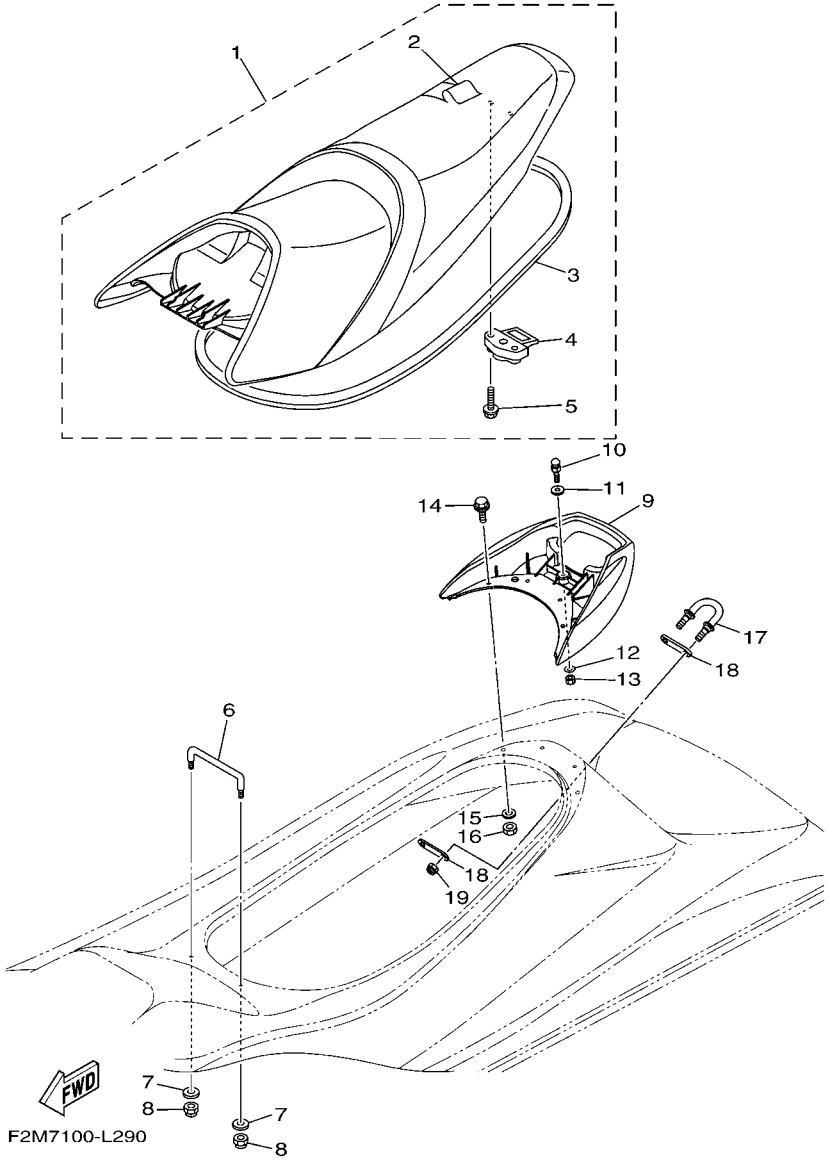

FIG. 29 SEAT & UNDER LOCKER

REF. NO.	PART NO.	DESCRIPTION	CAN	EUR				REMARKS
1	F2M–U371A–01	DOUBLE SEAT ASSY	1	1				
2	F2M–U371B–00	.COVER, SEAT 1	1	1				
3	F2N–U2664–00	.PACKING	1	1				
4	F2C–U3850–00	.SEAT LOCK ASSY	1	1				
5	90119–069UP	.BOLT, WITH WASHER	2	2				
6	F0X–6378C–00	STAY, SEAT 1	1	1				
7	90201–099U3	WASHER, PLATE	2	2				
8	9572R–08300	NUT, FLANGE	2	2				
9	F2N–U271B–01	GRIP, HAND	1	1				
10	GH1–U3774–00	PIN	1	1				
11	90201–109U6	WASHER, PLATE	1	1				
12	9299R–10200	WASHER	1	1				
13	9572R–10300	NUT, NYLON	1	1				
14	90119–089U2	BOLT, WITH WASHER	4	4				
15	9299R–08200	WASHER	4	4				
16	9572R–08300	NUT, FLANGE	4	4				
17	F2N–U1628–02	STERN EYE	1	1				
18	GP7–U4953–10	PLATE A	2	2				
19	9572R–08300	NUT, FLANGE	2	2				

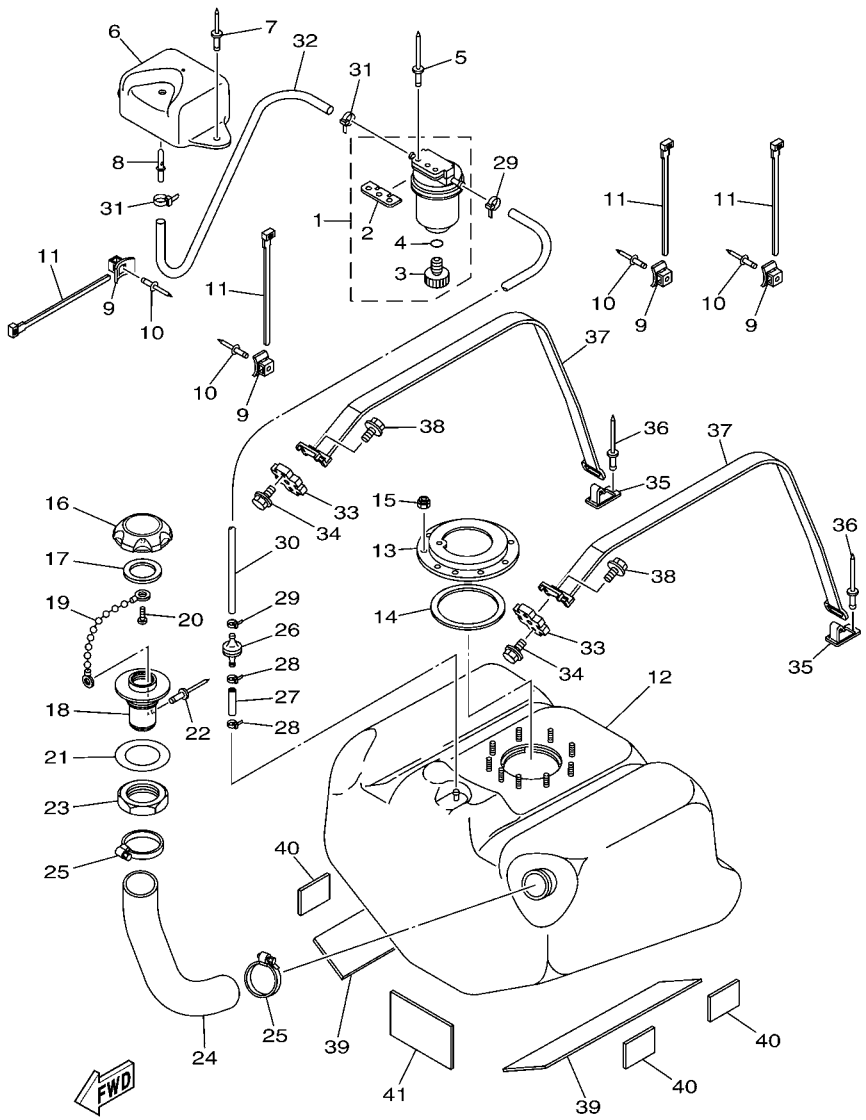

F2M1100-K300

FIG. 30 FUEL TANK

REF. NO.	PART NO.	DESCRIPTION	CAN	EUR				REMARKS
1	F2F–6214A–00	FILTER, VENT ASSY	1	1				
2	EW2–62142–00	.PLATE, FILTER	1	1				
3	70R–24543–00	.PLUG, DRAIN	1	1				
4	70R–24489–00	.O-RING	1	1				
5	90267–489U2	RIVET, BLIND	2	2				
6	F1W–U2159–00	SOCKET, VENTILATION	1	1				
7	90267–489U6	RIVET, BLIND	2	2				
8	F1G–62149–00	PIPE, VENTILATION	1	1				
9	F1W–U828M–00	BASE, CLAMP	4	4				
10	90267–489U6	RIVET, BLIND	4	4				
11	90464–32801	CLAMP	4	4				
12	F1K–U7711–10	TANK, FUEL	1					FOR CAN
	F1K–U7711–02	TANK, FUEL		1				FOR EUR
13	F1B–U7773–00	RING	1	1				
14	F1B–67747–00	PACKING, SEAL	1	1				
15	9572R–06300	NUT, NYLON	9	9				
16	F2N–U7831–10	CAP, FUEL FILLER	1	1				BLACK
17	GP7–U7832–01	PACKING	1	1				
18	GP7–U7833–11	SOCKET	1	1				BLACK
19	GP7–U7835–00	CHAIN BALL	1	1				
20	90169–049U1	TAPPING SCREW	1	1				
21	GP7–U7834–00	PACKING FUEL FILLER	1	1				
22	90267–329UR	RIVET, BLIND	1	1				
23	GP7–U783F–00	NUT, FUEL FILLER	1	1				
24	F2N–U7844–00	HOSE	1	1				
25	90601–155U4	BAND, HOSE 55	2	2				
26	EU0–67767–31	CHECK VALVE	1	1				

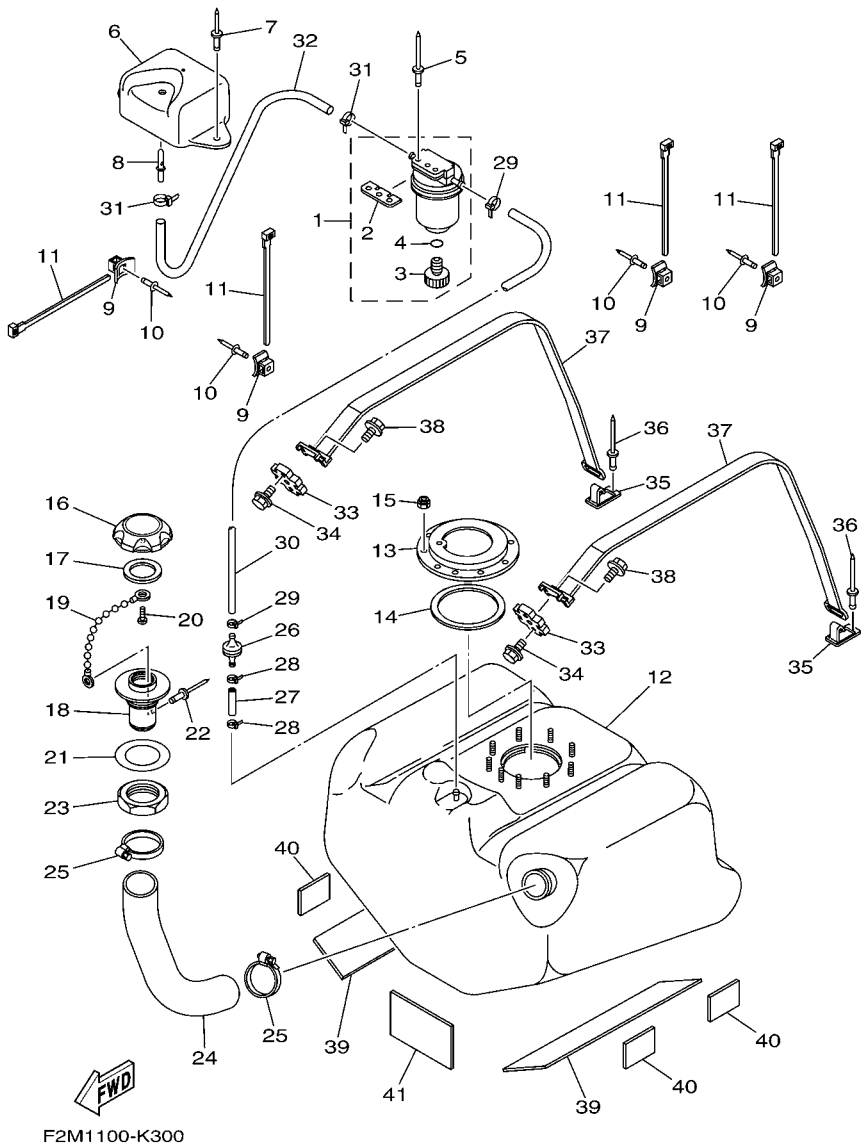

FIG. 30 FUEL TANK

REF. NO.	PART NO.	DESCRIPTION	CAN	EUR				REMARKS
27	GP7–U785H–00	HOSE, AIR VENT 3	1	1				
28	90465–11829	CLAMP	2	2				
29	90465–11829	CLAMP	2	2				
30	F1K–U785G–00	HOSE, AIR VENT	1	1				
31	90465–11829	CLAMP	2	2				
32	F0D–U7856–10	HOSE, AIR VENT 3	1	1				
33	F1X–U2873–00	NUT, SPECIAL	2	2				
34	90119–069UH	BOLT, WITH WASHER	4	4				
35	F1K–U5772–04	HOOK A	2	2				
36	90267–489U1	RIVET,BLIND	2	2				
37	F2N–67743–00	BELT, TANK 1	2	2				
38	90119–089U7	BOLT, WITH WASHER	2	2				
39	F1K–U759B–00	MAT 1	2	2				
40	F1W–U759C–01	MAT 2	4	4				
41	F1S–U8221–00	PAD, BATTERY	1	1				

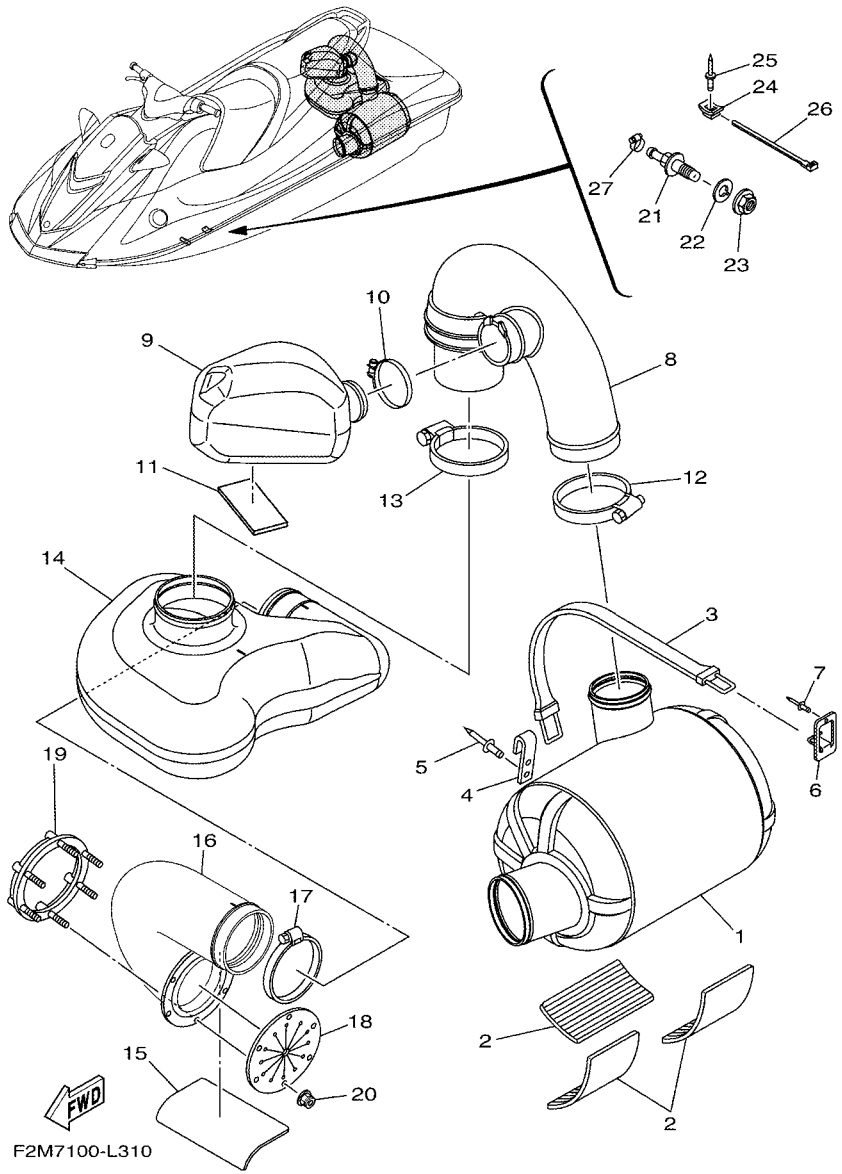

FIG. 31 EXHAUST 3

REF. NO.	PART NO.	DESCRIPTION	CAN	EUR				REMARKS
1	F1W–U7550–01	WATER LOCK COMP.	1	1				
2	F1S–U8221–00	PAD, BATTERY	3	3				
3	EW2–67821–00	BAND, FUEL TANK	1	1				
4	GA7–65772–00	HOOK A	1	1				
5	90267–489U1	RIVET,BLIND	2	2				
6	F1K–U5772–04	HOOK A	1	1				
7	90267–489U1	RIVET,BLIND	1	1				
8	F1W–U7555–00	HOSE, EXHAUST	1	1				
9	F1W–U753C–01	RESONATOR 1	1	1				
10	90601–170UG	BAND, HOSE 70	1	1				
11	F1K–U759C–00	MAT 2	1	1				
12	90450–99801	HOSE CLAMP ASSY	1	1				
13	90450–99804	HOSE CLAMP ASSY	1	1				
14	F2N–U4261–00	TANK, WATER	1	1				
15	F1S–U8221–00	PAD, BATTERY	1	1				
16	F2N–U758D–00	HOSE,EXHAUST 3	1	1				
17	90450–99801	HOSE CLAMP ASSY	1	1				
18	F1B–U751G–00	VALVE, EXHAUST	1	1				
19	F1S–U757B–01	PLATE	1	1				
20	F2N–U142L–00	NUT, LOCK	6	6				
21	F1K–6753B–00	PILOT, WATER	1	1				
22	F1B–67564–00	GASKET	1	1				
23	F0X–62733–00	NUT	1	1				
24	F1W–U828M–00	BASE, CLAMP	1	1				
25	90267–489U6	RIVET, BLIND	1	1				
26	90464–32801	CLAMP	1	1				
27	90467–17802	CLIP	1	1				

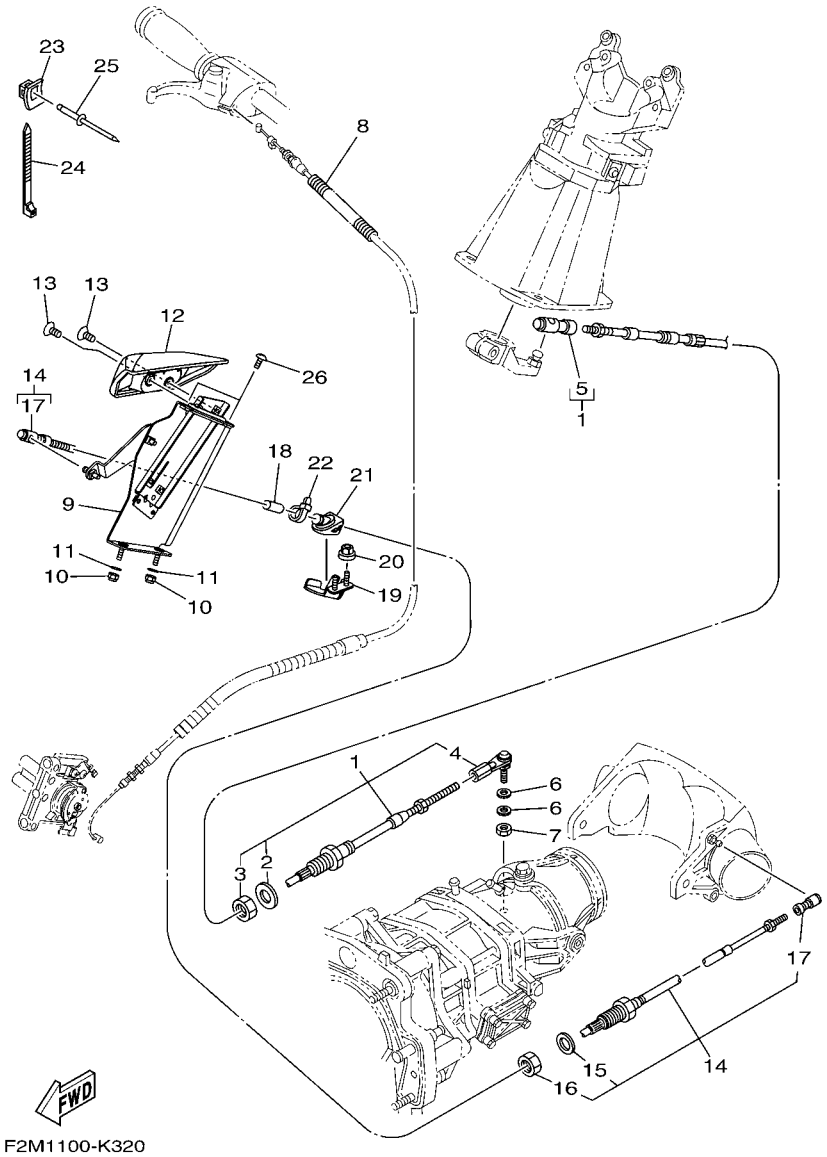

FIG. 32 CONTROL CABLE

REF. NO.	PART NO.	DESCRIPTION	CAN	EUR				REMARKS
1	F2N–61481–00	CABLE, STEERING	1	1				
2	F1B–61438–00	.PACKING C	1	1				
3	F1B–6151S–00	.NUT	1	1				
4	F1B–61461–02	.STUD, JOINT BALL	1	1				
5	F2N–61460–00	.BALL JOINT ASSY	1	1				
6	90201–06906	WASHER, PLATE	2	2				
7	9538R–06700	NUT	1	1				
8	90447–06803	TUBE	1	1				
9	F2N–U134A–00	REMOCON. LEVER ASSY.	1	1				
10	9572R–06300	NUT, NYLON	2	2				
11	9299R–06200	WASHER	2	2				
12	F2N–U2714–01	GRIP	1	1				
13	90151–06815	SCREW, COUNTERSUNK	2	2				
14	F2N–6149C–00	CABLE,REVERSE	1	1				
15	F1B–61438–00	.PACKING C	1	1				
16	F1B–6151S–00	.NUT	1	1				
17	F1B–61460–00	.BALL JOINT ASSY	2	2				
18	F1W–U146G–00	PACKING, CABLE	1	1				
19	F2N–U1467–00	BRACKET,STOPPER CABLE	1	1				
20	F2N–U142L–00	NUT, LOCK	2	2				
21	F2N–U146G–00	PACKING, CABLE	1	1				
22	90465–11829	CLAMP	1	1				
23	F1W–U828M–00	BASE, CLAMP	3	3				
24	90464–32801	CLAMP	3	3				
25	90267–489U6	RIVET, BLIND	3	3				
26	F2N–67823–00	SCREW	2	2				

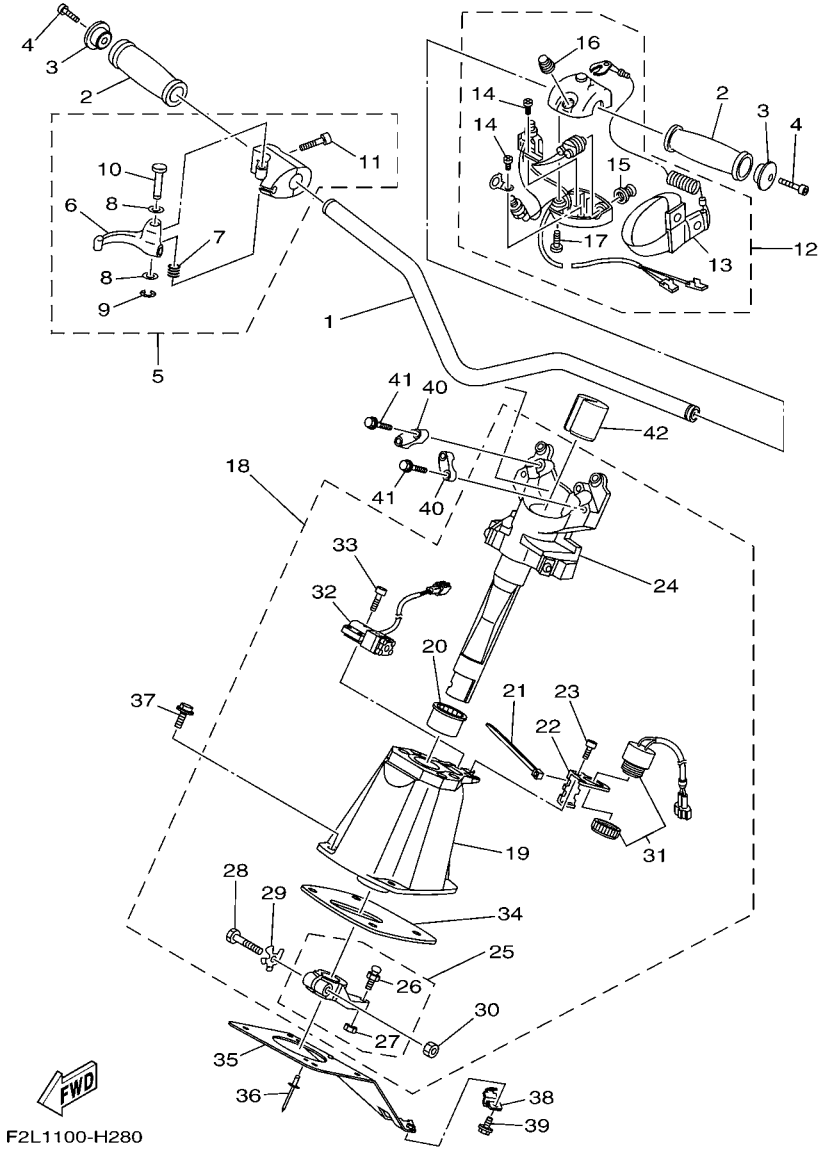

FIG. 33 STEERING 1

REF. NO.	PART NO.	DESCRIPTION	CAN	EUR				REMARKS
1	F2N–U1552–00	HANDLE	1	1				
2	GP7–U155D–01	GRIP, HANDLE	2	2				
3	GP7–U155F–00	GRIP, END	2	2				
4	90110–05908	BOLT, HEXAGON SOCKET HEAD	2	2				
5	F0D–67250–10	THROTTLE LEVER ASSY	1	1				
6	F0D–67255–02	.LEVER, THROTTLE	1	1				
7	EW2–67256–00	.SPRING	1	1				
8	EW2–67258–01	.WASHER	2	2				
9	EW2–67259–01	.E-RING	1	1				
10	F0D–67257–00	.SHAFT	1	1				
11	F1X–6725F–01	.BOLT, THROTTLE	2	2				
12	FK7–68310–07	SWITCH BOX ASSY	1	1				
13	EW2–68348–00	.LANYARD, STOP SWITCH	1	1				
14	97880–03008	.SCREW, PAN HEAD	2	2				
15	FK7–68312–02	.STOP BUTTON COMP	1	1				
16	FK7–68313–02	.START BUTTON COMP.	1	1				
17	97880–05025	.SCREW, PAN HEAD	2	2				
18	F1K–61400–01	STEERING MASTER ASSY	1	1				
19	F1K–6152M–00	.HOUSING ASSY	1	1				
20	F1K–6134M–00	.BUSH	1	1				
21	703–82591–00	.BAND	2	2				
22	F1K–6146H–10	.SPACER, BRKT.	1	1				
23	F1B–613C1–00	.SCREW	2	2				
24	F1K–67410–00	.SHAFT ASSY	1	1				
25	F1K–6153R–00	.ARM ASSY.	1	1				
26	EU0–61461–02	..STUD, JOINT BALL	1	1				
27	95720–06300	..NUT, SELF-LOCKING	1	1				

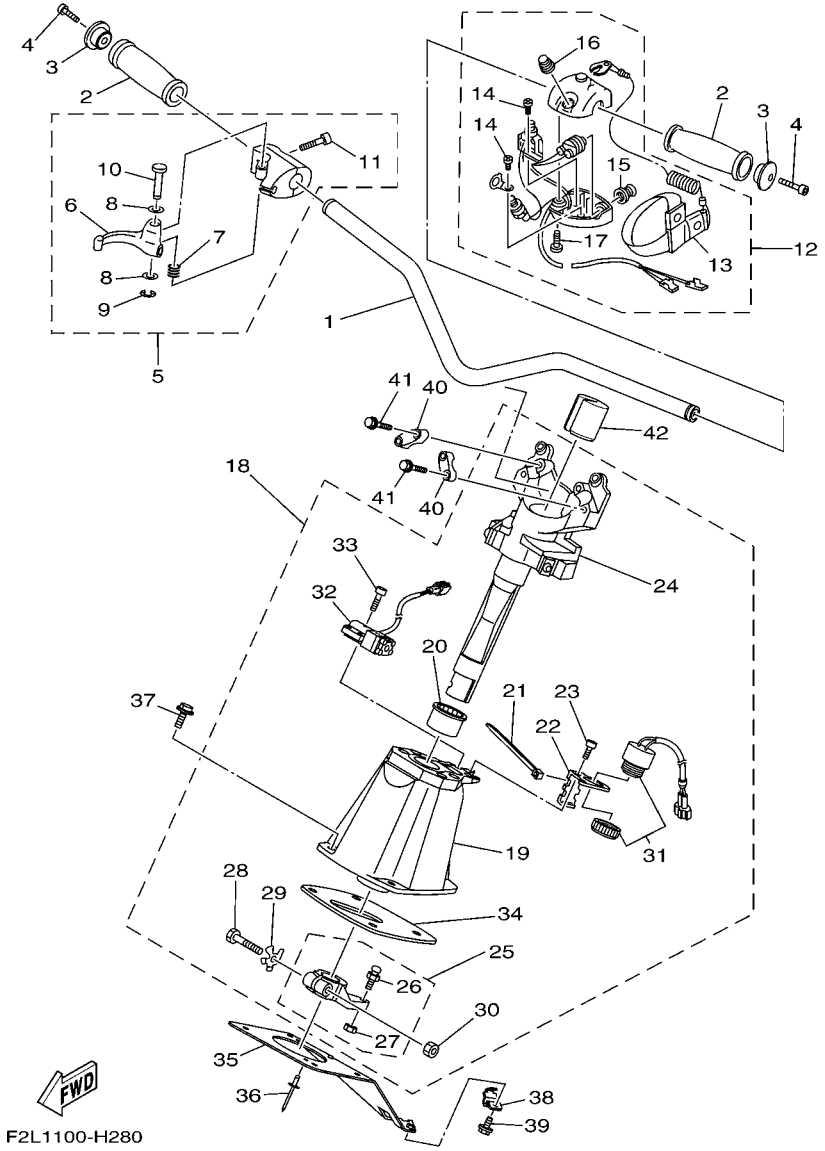

FIG. 33 STEERING 1

REF. NO.	PART NO.	DESCRIPTION	CAN	EUR				REMARKS
28	F1K–61355–00	.BOLT	1	1				
29	F1K–6142B–00	.PLATE, RETAINING	1	1				
30	95720–08300	.NUT, SELF-LOCKING	1	1				
31	F1S–68341–00	.BUZZER	1	1				
32	F1W–68303–00	.SENSOR ASSY	1	1				
33	F1W–61516–00	.BOLT	4	4				
34	F1K–6143C–00	.SEAL, RUBBER	1	1				
35	F1K–U1467–01	BRACKET,STOPPER CABLE	1	1				
36	90267–489U2	RIVET, BLIND	2	2				
37	90119–08836	BOLT, WITH WASHER	4	4				
38	F1K–U1468–03	STOPPER, CABLE	1	1				
39	90119–069UH	BOLT, WITH WASHER	1	1				
40	EU0–23814–31	HOLDER, HANDLE UPPER	2	2				
41	90119–08827	BOLT, WITH WASHER	4	4				
42	F1K–U1949–00	PLUG	1	1				

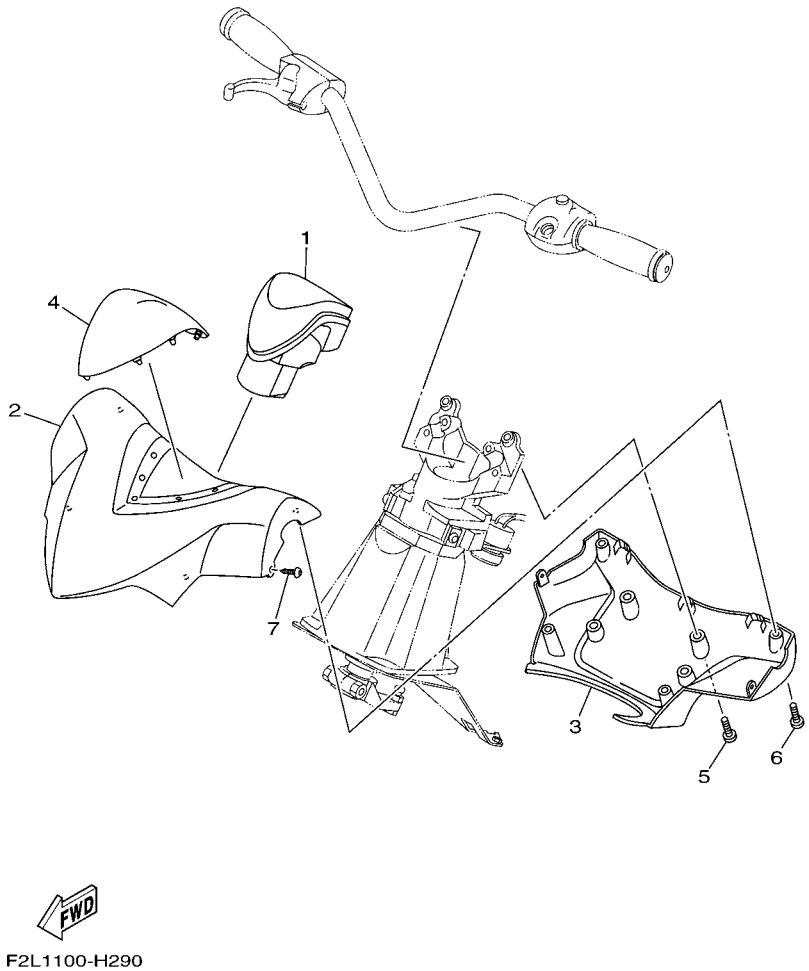

FIG. 34 STEERING 2

REF. NO.	PART NO.	DESCRIPTION	CAN	EUR				REMARKS
1	F1K–U156E–01	PAD 1	1	1				
2	F1K–U143D–01	PAD, STEERING 1	1	1				
3	F1K–U143E–01	PAD, STEERING 2	1	1				
4	F1K–U142D–00	COVER, PAD	1	1				
5	90154–06017	SCREW, BINDING	4	4				
6	90149–05903	SCREW	4	4				
7	90167–04003	SCREW, TAPPING	2	2				

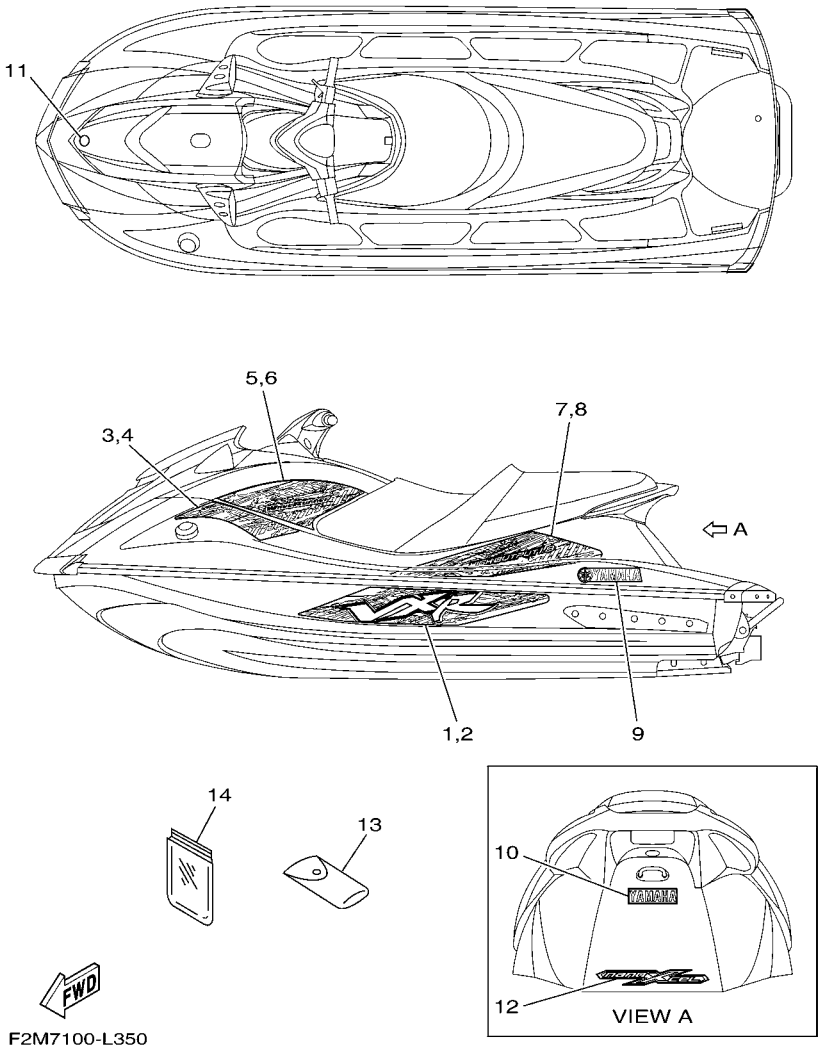

FIG. 35 GRAPHICS

REF. NO.	PART NO.	DESCRIPTION	CAN	EUR				REMARKS
1	F2M–U417B–60	GRAPHIC 1 (LH)	1	1				FOR GRAY
	F2M–U417B–70	GRAPHIC 1 (LH)	1	1				FOR RED
2	F2M–U417C–60	GRAPHIC 2 (RH)	1	1				FOR GRAY
	F2M–U417C–70	GRAPHIC 2 (RH)	1	1				FOR RED
3	F2M–U417D–60	GRAPHIC 3 (LH)	1	1				FOR GRAY
	F2M–U417D–70	GRAPHIC 3 (LH)	1	1				FOR RED
4	F2M–U417E–60	GRAPHIC 4 (RH)	1	1				FOR GRAY
	F2M–U417E–70	GRAPHIC 4 (RH)	1	1				FOR RED
5	F2M–U417F–60	GRAPHIC 5 (LH)	1	1				FOR GRAY
	F2M–U417F–70	GRAPHIC 5 (LH)	1	1				FOR RED
6	F2M–U417G–60	GRAPHIC 6 (RH)	1	1				FOR GRAY
	F2M–U417G–70	GRAPHIC 6 (RH)	1	1				FOR RED
7	F2M–U417H–60	GRAPHIC 7 (LH)	1	1				FOR GRAY
	F2M–U417H–70	GRAPHIC 7 (LH)	1	1				FOR RED
8	F2M–U417J–60	GRAPHIC 8 (RH)	1	1				FOR GRAY
	F2M–U417J–70	GRAPHIC 8 (RH)	1	1				FOR RED
9	F2R–U411C–00	EMBLEM, YAMAHA	2	2				FOR GRAY
	F1W–U411C–00	EMBLEM, YAMAHA	2	2				FOR RED
10	F2R–U4114–00	MARK, YAMAHA A	1	1				FOR GRAY
	F1W–U4114–00	MARK, YAMAHA A	1	1				FOR RED
11	F1K–U411H–00	EMBLEM, TUNING FORK	1	1				
12	F1W–U4121–00	EMBLEM A	1	1				
13	F1B–65986–10	TOOL SET	1	1				
14	EU0–65901–01	TOOL BAG	1	1				

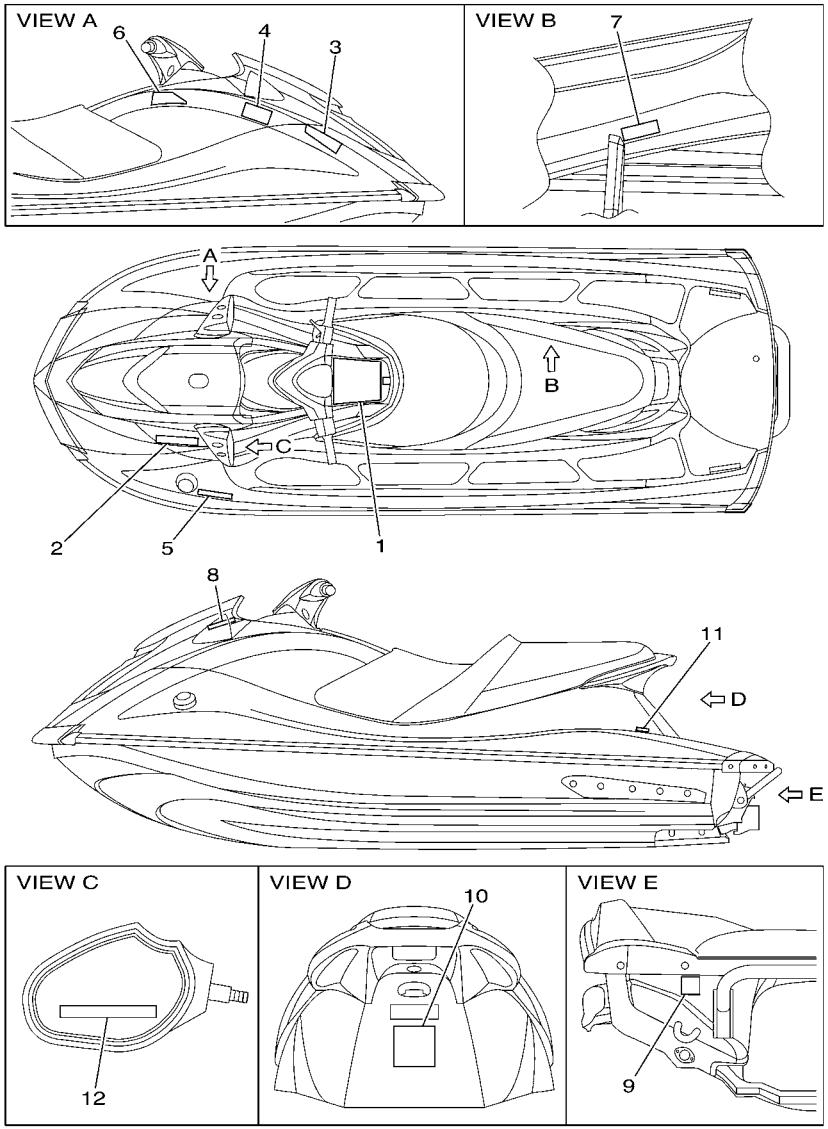

F2M1100-K360

FIG. 36 IMPORTANT LABELS

REF. NO.	PART NO.	DESCRIPTION	CAN	EUR				REMARKS
1	F2N–U41B1–10	LABEL, WARNING UNIFORM 1	1					
2	F1B–U41B1–21	LABEL, WARNING UNIFORM 1	1					
3	F1B–U41B1–31	LABEL, WARNING UNIFORM 1	1					
4	F1B–U41B2–01	LABEL, WARNING UNIFORM 2	1					
5	F1S–U415B–11	LABEL, WARNING(FUEL)	1					
6	F0V–U41D5–31	LABEL, WARNING SHIFT LEVER	1					
7	F0V–U41DB–12	LABEL, WARNING BATTERY	1					
8	F1B–U41F5–21	LABEL, FIRE EXTINGUISHER 1	1					
9	F1G–U418F–00	LABEL, RIGHTING	1					
10	F1S–U41E1–11	LABEL, SET 1	1					
11	F1S–U419E–01	LABEL 4	1					
12	GJ1–U419F–21	LABEL,5	2					

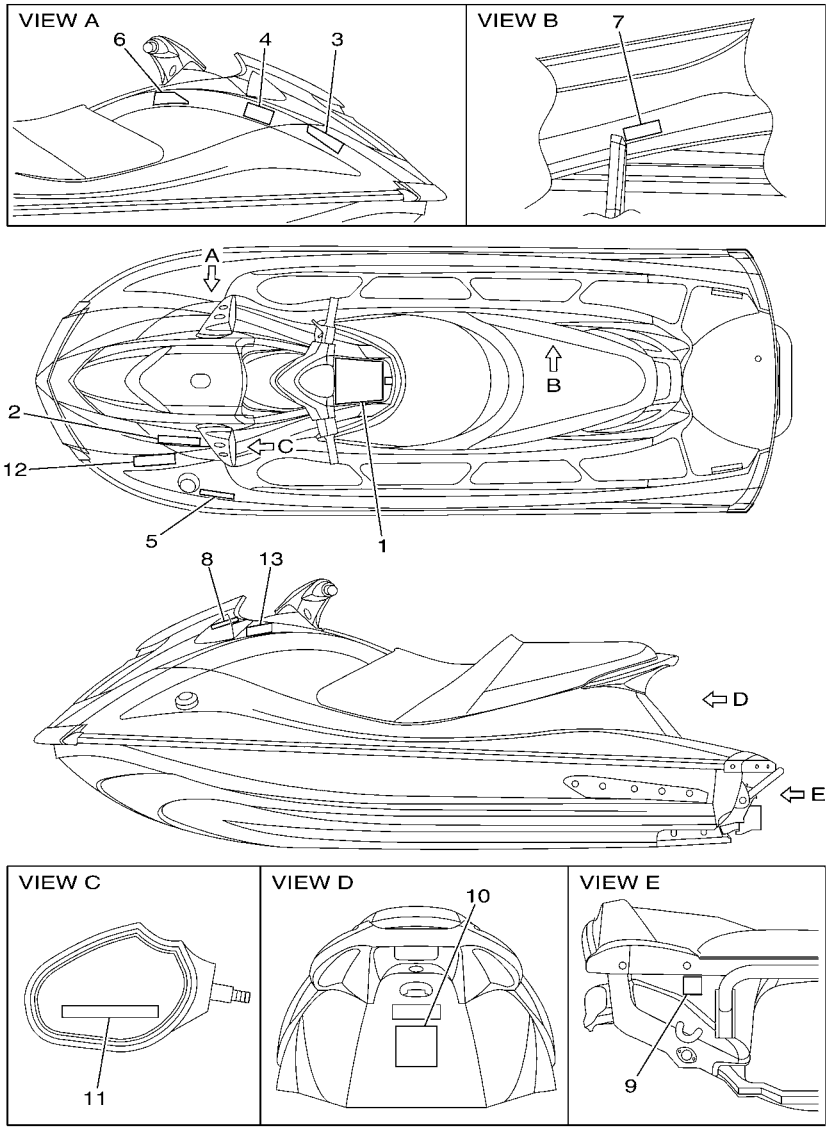

F2M1100-K370

FIG. 37 IMPORTANT LABELS 2

REF. NO.	PART NO.	DESCRIPTION	CAN	EUR				REMARKS
1	F2N–U41B1–10	LABEL, WARNING UNIFORM 1		1				
2	F1B–U41B1–21	LABEL, WARNING UNIFORM 1		1				
3	F1B–U41B1–31	LABEL, WARNING UNIFORM 1		1				
4	F1B–U41B2–01	LABEL, WARNING UNIFORM 2		1				
5	F1S–U415B–11	LABEL, WARNING(FUEL)		1				
6	F0V–U41D5–31	LABEL, WARNING SHIFT LEVER		1				
7	F0V–U41DB–12	LABEL, WARNING BATTERY		1				
8	F1B–U41F5–21	LABEL, FIRE EXTINGUISHER 1		1				
9	F1G–U418F–00	LABEL, RIGHTING		1				
10	F1S–U41E1–11	LABEL, SET 1		1				
11	GJ1–U419F–21	LABEL,5		2				
12	GP8–U416H–01	LABEL,WARNING(FRANCE)		1				
13	F1X–U413P–02	LABEL, BUILDERS PLATE		1				

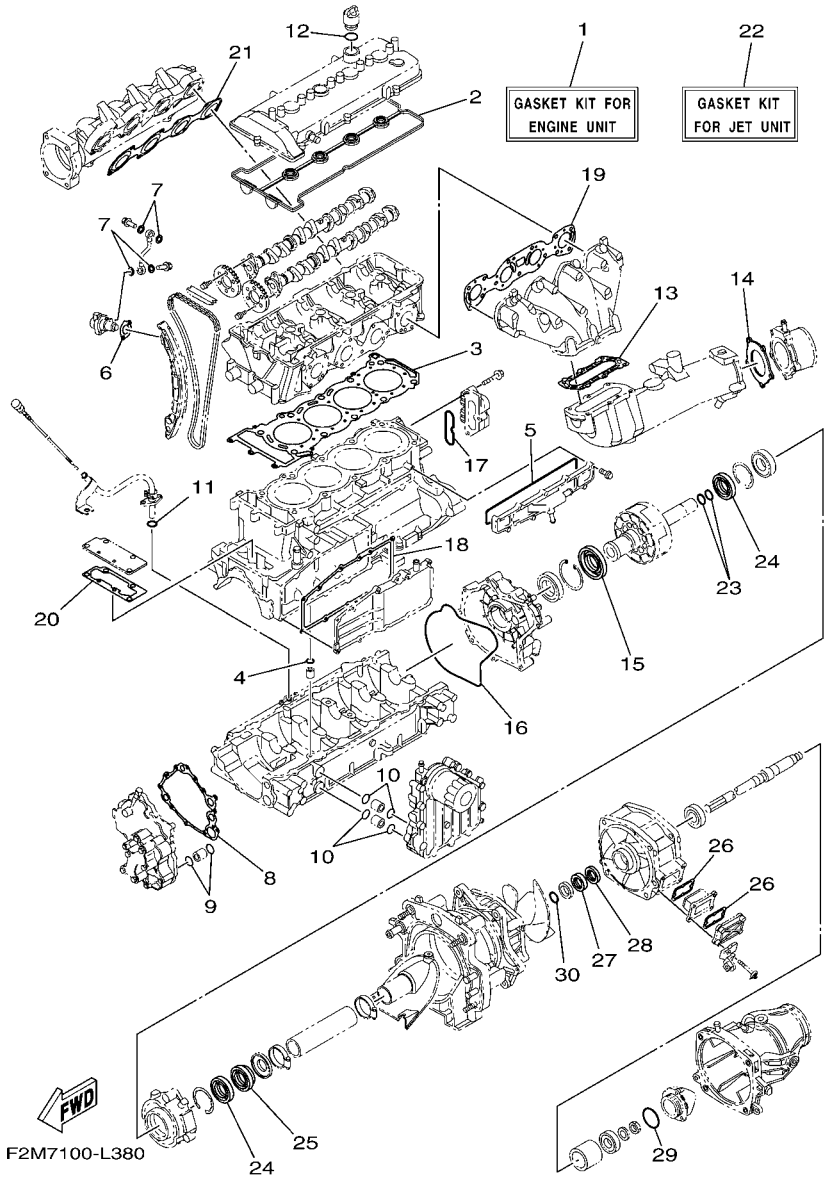

FIG. 38 REPAIR KIT 1

REF. NO.	PART NO.	DESCRIPTION	CAN	EUR				REMARKS
1	6BH–W0001–00	GASKET KIT FOR ENGINE UNIT	1	1				Go to P/N : PE0-WV-120008
2	6BH–11193–00	.GASKET, HEAD COVER 1	1	1				
3	6BH–11181–00	.GASKET, CYLINDER HEAD 1	1	1				
4	93210–11453	.O-RING	1	1				
5	6S5–12517–01	.GASKET, WATER INLET	1	1				
6	6S5–121E2–00	.GASKET	1	1				
7	90430–10007	.GASKET	4	4				
8	6S5–13563–00	.GASKET	1	1				
9	93210–21631	.O-RING	2	2				
10	93210–18322	.O-RING	4	4				
11	93210–12790	.O-RING	1	1				
12	93210–24M79	.O-RING	1	1				
13	6S5–14739–00	.GASKET, MUFFLER DAMPER 1	1	1				
14	6BH–14749–00	.GASKET, MUFFLER DAMPER 2	1	1				
15	6S5–81167–10	.OIL SEAL	1	1				
16	6S5–81168–00	.O-RING	1	1				
17	93210–60ME8	.O-RING	1	1				Go to P/N : PE0-WV-120008
18	6BH–13557–00	.GASKET	1	1				
19	6BH–14613–00	.GASKET, EXHAUST PIPE	1	1				
20	6BH–1131B–00	.GASKET, COVER	1	1				
21	6BH–13645–00	.GASKET, MANIFOLD 1	1	1				
22	6S5–W0001–22	GASKET KIT FOR JET UNIT	1	1				
23	93210–22MF1	.O-RING	2	2				
24	93102–29008	.OIL SEAL	2	2				
25	93102–29009	.OIL SEAL	1	1				
26	66V–42414–00	.O-RING	2	2				
27	93102–31009	.OIL SEAL	1	1				

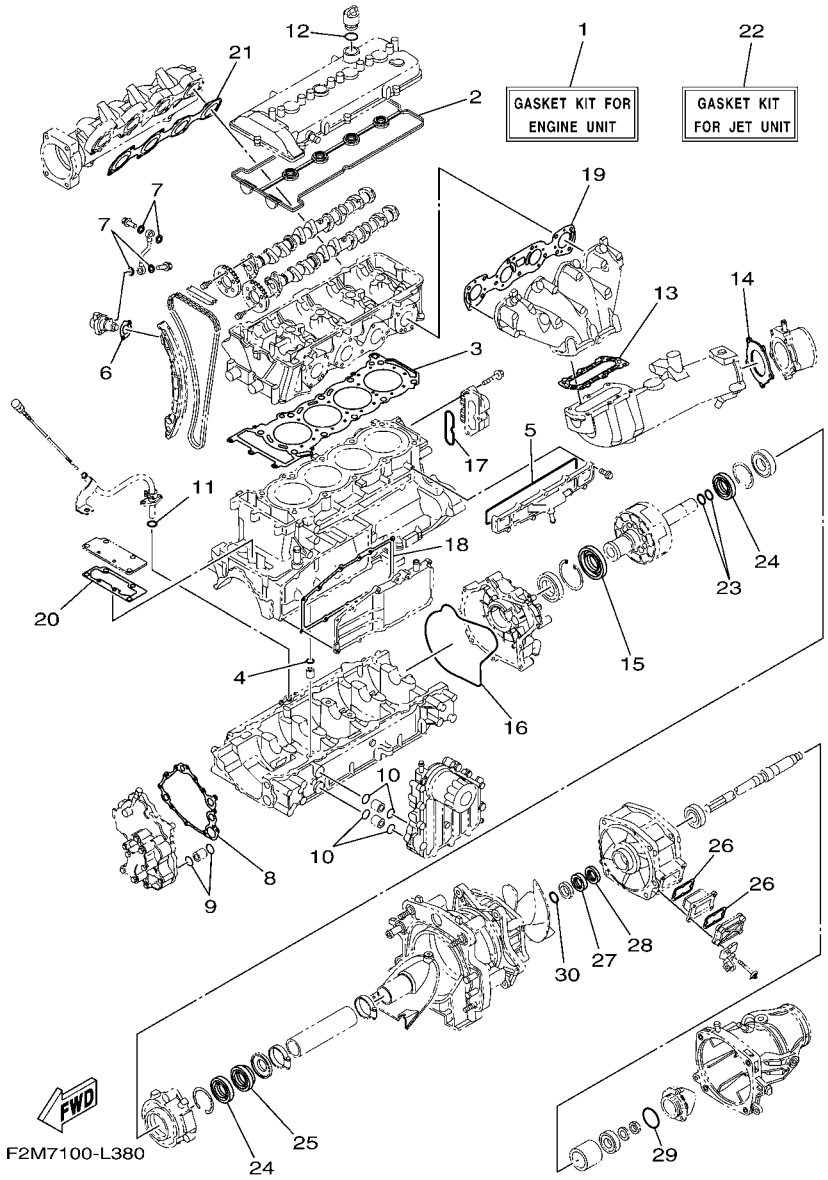

FIG. 38 REPAIR KIT 1

REF. NO.	PART NO.	DESCRIPTION	CAN	EUR				REMARKS
28	93101–31001	.OIL SEAL	1	1				
29	6S5–5111K–00	.O-RING 1	1	1				
30	93210–30611	.O-RING	1	1				

PARTS NEWS

YAMAHA
YAMAHA MOTOR CO., LTD.
2500 SHINGAI IWATA SHIZUOKA JAPAN

Date: 2012/03/27

News No.PE0-WV-120008

Signature: S. Ishibashi

Cause ☑ Revision Notice ☐ Correction ☐ Sales Unit Change ☐ Others

Model	See the"List of Models and CATALOGUE No's below."
Subject	PARTS CATALOGUE CORRECTIONS
CATALOGUE NO.	See the"List of Models and CATALOGUE No's below."

Time of YPEC Revision Text, Illustration --> Apr./10/2012 PDF Replace --> Apr./10/2012

(YPEC = Yamaha Parts Electrical Catalogue = Website parts catalogue)

7. LIST of Models and CATALOGUE No's.

The applicable MODELS, MODEL CODES, and CATALOGUE No's are as follows.

CATALOGUE No.	Model	Mode code	DESTINATION	Applicable Serial No.
1LF2M-110E1 1LF2M-100E1 1LF2M-300E1	VX1800A-L	F2M7 F2M9	USA / CAN EUR	F2M-809000 and following (ENGINE:6CN-1009001 and following)
1LF2M-110EA 1LF2M-100EA 1LF2M-300EA	VX1800-L	F2MA F2MC	USA / CAN EUR	

FIG. 3 CRANKCASE SECTION

8. LIST CORRECTION

Ref.No.	OLD PART No.	**NEW PART No.**	PART NAME	Q'TY	INTERCHANGE ABILITY(*1)	REMARKS
1	6BH-15100-20	**6CR-15100-01**	CRANKCASE ASSY	1	B	Revision
4	6BH-W009B-11-94	**6CR-W009B-00-94**	CYLINDER BLOCK ASSY	1	B	Revision

*1: Interchangeability

A	Old Parts → Old Parts New Parts → New Parts	
B	Old Parts → Old Parts New Parts → New Parts	
C	Old Parts → Old Parts New Parts → New Parts	
	These parts are interchangeable with a set	

9. ILLUSTRATION CORRECTION

NEW type

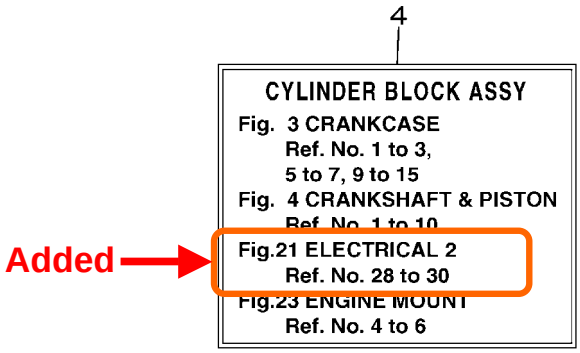

Thank you very much for your cooperation.

Parts Manager Check	Service Manager Check	Parts Manager File	YAMAHA MOTOR CO.,LTD 2500 Shingai Iwata Shizuoka 438-8501.Japan Technical Publication Dept.

YAMAHA GENUINE Parts & Accessories

PARTS NEWS

YAMAHA MOTOR CO., LTD.
2500 SHINGAI IWATA SHIZUOKA JAPAN

Date: 2012/03/27

News No.PE0-WV-120008

Signature: S. Ishibashi

Cause ☑ Revision Notice ☐ Correction ☐ Sales Unit Change ☐ Others

Model	See the"List of Models and CATALOGUE No's below."
Subject	PARTS CATALOGUE CORRECTIONS
CATALOGUE NO.	See the"List of Models and CATALOGUE No's below."

Time of YPEC Revision Text, Illustration --> Apr./10/2012 PDF Replace --> Apr./10/2012

(YPEC = Yamaha Parts Electrical Catalogue = Website parts catalogue)

FIG. 21 ELECTRICAL 2 SECTION

10. LIST CORRECTION

Ref.No.	OLD PART No.	**NEW PART No.**	PART NAME	Q'TY	INTERCHANGE ABILITY	REMARKS
28	6D3-8273J-01	**6CS-8273J-00**	EARTH PLATE COMP.	1		Revision
29	93210-60ME8	**93210-32172**	O-RING	1		Revision
30	90119-06048	**90119-06MA3**	BOLT, WITH WASHER	3->**2**		Revision

11. ILLUSTRATION CORRECTION

NEW type

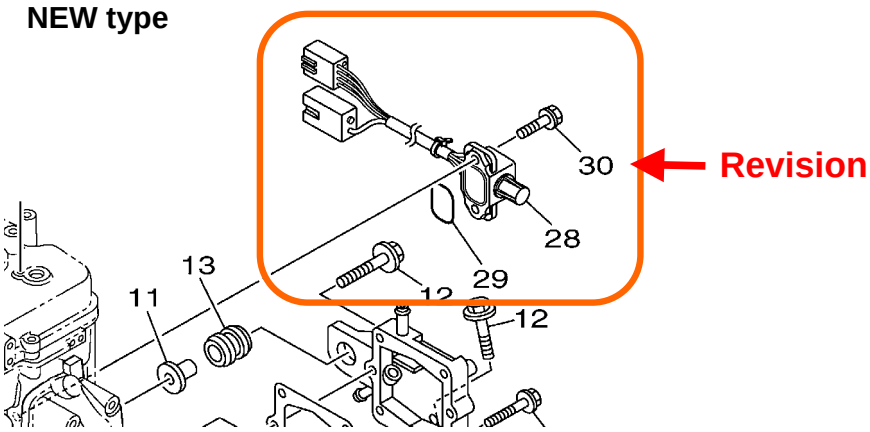

FIG. 38 REPAIER KIT 1 SECTION

12. LIST CORRECTION

Ref.No.	OLD PART No.	**NEW PART No.**	PART NAME	Q'TY	INTERCHANGE ABILITY	REMARKS
1	6BH-W0001-00	**6CR-W0001-00**	GASKET KIT FOR ENGINE UNIT	1		Revision
17	93210-60ME8	**93210-32172**	.O-RING	1		Revision

Thank you very much for your cooperation.

Parts Manager Check	Service Manager Check	Parts Manager File	YAMAHA MOTOR CO.,LTD 2500 Shingai Iwata Shizuoka 438-8501.Japan Technical Publication Dept.

YAMAHA GENUINE Parts & Accessories

PART NO.	REF. NO.
6BH–11102–10	2 – 2
6BH–11119–00	2 – 14
6BH–1111E–00	2 – 12
6S5–11133–10	2 – 3
6S5–11166–10	11 – 1
6S5–11167–10	11 – 5
6BH–11181–00	2 – 11
	38 – 3
6BH–11191–20	1 – 1
6BH–11193–00	1 – 3
	38 – 2
69J–11301–10	3 – 9
6BH–1131B–00	3 – 29
	38 – 20
6BH–1131C–00	3 – 28
6S5–1131M–10–8P	3 – 18
68V–11325–02	3 – 10
67F–11328–00	3 – 11
6S5–11377–00	3 – 16
6S5–11411–00	4 – 1
6S5–11416–00	4 – 2
6S5–11416–10	4 – 2
6S5–11416–20	4 – 2
6S5–11416–30	4 – 2
6S5–11416–40	4 – 2
6S5–11459–01	4 – 15
6S5–11603–00	4 – 4
6BH–11631–00–B0	4 – 3
6S5–11633–00	4 – 5
6BH–11650–00	4 – 7
6S5–11654–00	4 – 8
6S5–11656–00	4 – 10
6S5–11656–10	4 – 10
6S5–11656–20	4 – 10
6S5–11656–30	4 – 10
6S5–12111–00	5 – 5
6S5–12113–00	5 – 8
6S5–12116–00	5 – 7
6S5–12117–00	5 – 9
3LD–12118–00	5 – 10
51Y–12119–00	5 – 11
6S5–12121–00	5 – 6
6S5–12153–00	5 – 13
3LD–12168–00	5 – 12
3LD–12168–20	5 – 12
3LD–12168–40	5 – 12
3LD–12168–60	5 – 12
3LD–12168–80	5 – 12

PART NO.	REF. NO.
3LD–12168–A0	5 – 12
3LD–12168–F0	5 – 12
3LD–12168–H1	5 – 12
3LD–12168–K1	5 – 12
3LD–12168–M1	5 – 12
3LD–12168–R1	5 – 12
3LD–12168–U1	5 – 12
3LD–12168–W1	5 – 12
3LD–12168–Y1	5 – 12
3LD–12169–11	5 – 12
3LD–12169–31	5 – 12
3LD–12169–50	5 – 12
3LD–12169–70	5 – 12
3LD–12169–90	5 – 12
3LD–12169–E0	5 – 12
3LD–12169–G0	5 – 12
3LD–12169–J0	5 – 12
3LD–12169–L0	5 – 12
6BH–12171–00	5 – 1
6D3–12176–00	5 – 3
6BH–12181–00	5 – 2
6S5–121E2–00	5 – 19
	38 – 6
6S5–12210–00	5 – 18
6S5–12228–01	2 – 7
6BH–12241–00	5 – 25
6BH–12251–00	5 – 24
6BH–12252–00	5 – 15
6BH–12279–00	5 – 16
6S5–12289–00	4 – 12
	15 – 13
6D3–12411–00	2 – 16
6BH–12413–00	2 – 17
6S5–1243E–01	13 – 11
60E–12443–00	13 – 8
6BH–1244H–00	13 – 22
6S5–12469–01–94	3 – 22
6S5–12517–01	3 – 23
	38 – 5
6BH–12577–00	13 – 27
6S5–12578–00	2 – 19
6S5–12579–00	13 – 29
63M–12580–00	13 – 5
60E–12581–00	13 – 4
6BH–12584–00	13 – 15
6CN–12588–00	13 – 24
6S5–12589–01	13 – 20
6S5–12858–00	10 – 2

PART NO.	REF. NO.
6S5–12880–10	6 – 4
6S5–1310A–20	9 – 1
6BH–1319K–00	3 – 34
6BH–13300–10	8 – 1
6S5–13317–10	9 – 4
6S5–13337–10	3 – 25
6S5–13405–10	9 – 2
6S5–13418–00	5 – 21
69J–13440–01	10 – 1
60E–13446–00	10 – 12
6S5–13446–10	8 – 5
6BH–13470–10	10 – 3
6S5–13477–00	9 – 3
6BH–13532–00	6 – 19
6BH–13556–00	10 – 4
8FP–13556–10	6 – 13
6BH–13557–00	3 – 19
	38 – 18
6S5–13563–00	8 – 2
	38 – 8
6P2–13578–00	6 – 6
6P2–13588–00	6 – 5
6BH–13641–01	6 – 2
6BH–13645–00	6 – 24
	38 – 21
6BH–13750–00	6 – 1
6S5–13761–10	6 – 11
6S5–13907–00	22 – 1
68V–1416A–00	6 – 12
6S5–14285–00	6 – 16
6CN–14294–10	6 – 21
6D3–14305–21	21 – 1
6BH–14360–00	6 – 10
6S5–14413–00–94	6 – 28
6BH–14445–00	6 – 18
63P–14446–00	6 – 7
6BH–1444B–00	6 – 14
6BH–14457–00	6 – 17
6D3–14495–00	7 – 2
	21 – 11
6S5–14496–00	6 – 9
6BH–14613–00	12 – 1
	38 – 19
6BH–14711–10	12 – 2
6BH–14721–10	12 – 6
6S5–14739–00	12 – 7
	38 – 13
6BH–14749–00	12 – 14

PART NO.	REF. NO.
6BH–14749–00	38 – 14
6S5–14752–00	12 – 17
6S5–1475A–00	12 – 18
6S5–14771–00–94	12 – 11
6BH–14784–01–94	12 – 15
6BH–15100–20	3 – 1
6BH–15362–00	3 – 32
6S5–15363–00	1 – 10
6S5–15486–10	9 – 5
5EL–15511–00	19 – 6
6S5–15515–00	18 – 3
6S5–15517–00	18 – 5
6S5–15521–00	18 – 4
6S5–15590–00	18 – 1
6S5–17031–00	4 – 17
6S5–17525–01	4 – 14
6S5–17572–01	4 – 11
6BH–17586–10	4 – 16
EU0–23814–31	33 – 40
6S5–24300–01	6 – 20
70R–24489–00	30 – 4
70R–24543–00	30 – 3
6BU–26311–00	21 – 2
67F–2812A–00	20 – 29
6BH–41661–00–94	23 – 4
6BH–41662–00–94	23 – 5
66V–42414–00	14 – 9
	38 – 26
67X–44517–10–94	23 – 1
663–45119–00	15 – 11
6S5–45332–00–94	15 – 4
6S5–45511–00	14 – 17
6S5–45538–00	14 – 13
6S5–45593–00–94	15 – 12
6S5–45613–10	15 – 9
6S5–45813–01–94	4 – 13
6BH–4581J–00	15 – 1
6S5–5111K–00	14 – 21
	38 – 29
68N–5112T–00	26 – 3
66V–51312–01–94	14 – 4
6S5–51315–00–94	14 – 7
6S5–51323–00	15 – 2
6BH–51348–01	14 – 24
6D3–52358–00	16 – 8
F1K–6134M–00	33 – 20
F1K–61355–00	33 – 28
F1B–613C1–00	33 – 23

PART NO.	REF. NO.
F1K–61400–01	33 – 18
F1K–6142B–00	33 – 29
F1B–61438–00	32 – 2
	32 – 15
F1K–6143C–00	33 – 34
F1B–61460–00	32 – 17
F2N–61460–00	32 – 5
EU0–61461–02	33 – 26
F1B–61461–02	32 – 4
F1K–6146H–10	33 – 22
F2N–61481–00	32 – 1
F2N–6149C–00	32 – 14
F1W–61516–00	33 – 33
F1B–6151S–00	32 – 3
	32 – 16
F1K–6152M–00	33 – 19
F1K–6153R–00	33 – 25
F1K–61624–00	26 – 21
F0X–61637–00	26 – 24
EU0–61652–00	13 – 10
	26 – 8
F0X–61652–00	26 – 25
EW2–62142–00	30 – 2
F1G–62149–00	30 – 8
F2F–6214A–00	30 – 1
GJ3–6215F–00	22 – 12
F0X–62733–00	31 – 23
GU2–62875–01	24 – 17
F0X–6378C–00	29 – 6
F2M–6517C–00	25 – 8
F0X–6517R–01	24 – 16
GA7–65772–00	31 – 4
EU0–65901–01	35 – 14
F1B–65986–10	35 – 13
F0D–67250–10	33 – 5
F0D–67255–02	33 – 6
EW2–67256–00	33 – 7
F0D–67257–00	33 – 10
EW2–67258–01	33 – 8
EW2–67259–01	33 – 9
F1X–6725F–01	33 – 11
F1K–67410–00	33 – 24
F1K–6753B–00	31 – 21
F1B–67564–00	31 – 22
F2N–67743–00	30 – 37
F1B–67747–00	30 – 14
EU0–67767–31	30 – 26
EW2–67821–00	31 – 3

PART NO.	REF. NO.
F2N–67823–00	25 – 20
	32 – 26
F2N–67823–10	24 – 13
F1K–6820A–20	22 – 14
GU2–6822E–01	22 – 16
6S5–682E0–00	22 – 2
F1W–68303–00	33 – 32
FK7–68310–07	33 – 12
FK7–68312–02	33 – 15
FK7–68313–02	33 – 16
F1S–68341–00	33 – 31
EW2–68348–00	33 – 13
6S5–81167–10	18 – 13
	38 – 15
6S5–81168–00	18 – 17
	38 – 16
6S5–81315–00	21 – 27
6S5–81328–00	18 – 18
66V–8132W–00	20 – 27
6S5–81337–20	18 – 11
6S5–81364–10	18 – 24
6S5–81410–00	18 – 7
6S5–81450–01	18 – 6
6S5–81800–00	19 – 1
6S5–81810–00	19 – 13
6S5–81820–00	19 – 12
6S5–81826–00	19 – 10
6S5–81830–00	19 – 3
6S5–81840–00	19 – 8
11H–81844–00	19 – 2
4G0–81844–00	19 – 4
66V–81844–00	20 – 28
5EL–81845–00	19 – 11
6BH–81845–00	20 – 8
3TB–81847–00	19 – 9
6BH–81847–00	20 – 30
1J7–81847–60	19 – 5
5A8–81850–10	19 – 14
6B6–81940–00	20 – 26
6S5–81942–10	20 – 9
60E–81950–00	20 – 24
68V–81950–00	20 – 25
6S5–81960–00	21 – 6
6S5–81972–01–94	21 – 8
6S5–81975–00	21 – 7
EU0–82110–09	22 – 4
6S5–82115–00	20 – 16
6S5–82116–00	22 – 34

PART NO.	REF. NO.
6S5–82117–00	20 – 17
67F–82151–00	20 – 19
67F–82151–10	20 – 20
67F–82151–30	20 – 21
67F–82151–40	20 – 22
	20 – 23
6D3–82157–00	20 – 18
6BH–82170–00	20 – 15
6S5–82310–00	21 – 14
61N–82317–00	1 – 7
6A0–82317–00	20 – 13
6BH–82380–00	6 – 8
68V–82504–00	21 – 26
60E–82556–00	22 – 3
60E–82560–01	21 – 21
703–82591–00	33 – 21
6S5–8259E–00	20 – 32
6CN–8259L–00	20 – 34
6D3–8273J–01	21 – 28
60E–83627–00	20 – 10
682–84385–01	13 – 9
6BH–85516–00	3 – 35
6BH–8572F–00	3 – 33
61A–85790–00	21 – 19
6AA–85790–00	21 – 31
65L–85886–00	6 – 15
6D3–85896–00	21 – 24
6CN–8591A–10	20 – 11
6B6–86261–00	22 – 35
6B6–86261–10	22 – 35
6B6–86265–00	22 – 36
6B6–86265–10	22 – 36
6BH–E110M–00	1 – 4
6S5–E118E–00	1 – 6
6S5–E1328–00	1 – 5
67X–E2590–10	13 – 34
6S5–E4410–01	7 – 6
6BH–E4419–00	7 – 12
6S5–E4436–00	7 – 8
6S5–E4451–00	7 – 7
6S5–G2717–00	7 – 9
6CN–G4532–00	23 – 2
6CN–G4574–00	23 – 3
6AN–G5214–00–94	14 – 10
6AN–G5831–00	14 – 1
6AN–G6882–00	14 – 8
6BH–R1142–10	7 – 13
6BU–R1313–00–94	14 – 35

PART NO.	REF. NO.
6D3–R1314–00	16 – 1
6BU–R1318–00	14 – 26
6AP–R1321–01	14 – 23
6AN–R1326–00–94	14 – 20
6CN–R1333–00	17 – 1
6D3–R1341–00	14 – 34
6S5–R1381–01	15 – 17
F2N–U134A–00	32 – 9
F1K–U135C–01	25 – 13
F1K–U142D–00	34 – 4
F2N–U142L–00	24 – 14
	31 – 20
	32 – 20
F1K–U143D–01	34 – 2
F1K–U143E–01	34 – 3
F2M–U143G–00	17 – 3
EU0–U1461–02	16 – 11
F2N–U1467–00	32 – 19
F1K–U1467–01	33 – 35
F1K–U1468–03	33 – 38
F1W–U146G–00	32 – 18
F2N–U146G–00	32 – 21
F2C–U151S–00	22 – 20
F2N–U1552–00	33 – 1
GP7–U155D–01	33 – 2
GP7–U155F–00	33 – 3
F1K–U156E–01	34 – 1
F2N–U1628–02	26 – 16
	29 – 17
F1B–U1653–02	26 – 20
F2C–U1743–00	25 – 7
F1K–U1949–00	33 – 42
F2N–U2127–00	28 – 1
F2M–U213B–00	25 – 2
F2N–U213G–01	28 – 2
F1W–U2159–00	30 – 6
F2N–U2187–00	28 – 6
F2N–U2188–00	28 – 7
F1S–U2280–01	26 – 32
F1S–U2285–00	26 – 33
F2N–U2511–02	27 – 1
F1K–U2512–03	27 – 6
F1K–U2519–20	27 – 7
F1K–U251D–01	27 – 10
F1K–U251E–01	27 – 11
F2N–U2663–01	25 – 6
F2N–U2664–00	29 – 3
F1K–U266C–00	24 – 9

PART NO.	REF. NO.
F2N–U266C–01	24 – 2
F1W–U269B–00	26 – 7
F2N–U2714–01	32 – 12
F2N–U271B–01	29 – 9
F1K–U273B–06	17 – 2
F2N–U278A–00	26 – 38
F2L–U278F–01	26 – 40
F2L–U278G–01	26 – 42
F2L–U278H–00	26 – 41
	26 – 43
F1K–U283B–02	25 – 16
F1X–U2873–00	30 – 33
F2N–U351H–00	27 – 14
F2N–U351J–00	27 – 15
F2N–U351K–00	27 – 16
F2N–U351M–00	27 – 17
F2N–U351N–00	27 – 18
F2N–U3581–00	27 – 13
F2M–U371A–01	29 – 1
F2M–U371B–00	29 – 2
GH1–U3774–00	29 – 10
F2C–U3850–00	29 – 4
F1W–U4114–00	35 – 10
F2R–U4114–00	35 – 10
F1W–U411C–00	35 – 9
F2R–U411C–00	35 – 9
F1K–U411H–00	35 – 11
F1W–U4121–00	35 – 12
F1X–U413P–02	37 – 13
F1S–U415B–11	36 – 5
	37 – 5
GP8–U416H–01	37 – 12
F2M–U417B–60	35 – 1
F2M–U417B–70	35 – 1
F2M–U417C–60	35 – 2
F2M–U417C–70	35 – 2
F2M–U417D–60	35 – 3
F2M–U417D–70	35 – 3
F2M–U417E–60	35 – 4
F2M–U417E–70	35 – 4
F2M–U417F–60	35 – 5
F2M–U417F–70	35 – 5
F2M–U417G–60	35 – 6
F2M–U417G–70	35 – 6
F2M–U417H–60	35 – 7
F2M–U417H–70	35 – 7
F2M–U417J–60	35 – 8
F2M–U417J–70	35 – 8

PART NO.	REF. NO.
F1G–U418F–00	36 – 9
	37 – 9
F1S–U419E–01	36 – 11
GJ1–U419F–21	36 – 12
	37 – 11
F2N–U41B1–10	36 – 1
	37 – 1
F1B–U41B1–21	36 – 2
	37 – 2
F1B–U41B1–31	36 – 3
	37 – 3
F1B–U41B2–01	36 – 4
	37 – 4
F0V–U41D5–31	36 – 6
	37 – 6
F0V–U41DB–12	36 – 7
	37 – 7
F1S–U41E1–11	36 – 10
	37 – 10
F1B–U41F5–21	36 – 8
	37 – 8
F2N–U4261–00	31 – 14
F2N–U471E–00	25 – 25
F1K–U471E–03	25 – 15
F2N–U471F–00	25 – 27
F2N–U475B–03	24 – 1
F1W–U475F–01	24 – 5
F1W–U491K–00	27 – 2
F2C–U4953–10	26 – 19
GP7–U4953–10	26 – 18
	29 – 18
F1K–U515A–00	25 – 10
F2N–U516N–00–P9	24 – 7
F2N–U516N–00–PA	24 – 7
F2N–U516P–00	24 – 8
F2M–U517B–00–P3	25 – 1
F2M–U517B–00–P4	25 – 1
F1K–U517D–05	25 – 12
F1X–U517E–01	25 – 22
F2N–U517F–00	25 – 21
F2N–U517H–01	24 – 15
F1K–U517R–00	25 – 14
F2M–U517V–00	25 – 4
F1K–U518E–04	25 – 11
F2N–U519D–00	24 – 18
F2N–U5633–00	24 – 19
F1K–U5772–04	22 – 7
	25 – 30

PART NO.	REF. NO.
F1K–U5772–04	30 – 35
	31 – 6
F2N–U596B–00	25 – 24
F2N–U596C–00	25 – 26
F1K–U5983–01	25 – 33
GD0–U7249–00–05	15 – 19
F2N–U7254–00	21 – 5
F1S–U725E–01	14 – 38
6CN–U72M2–00	14 – 27
F2M–U732B–00	23 – 12
	23 – 13
EU0–U7354–00–01	23 – 9
EU0–U7354–00–03	23 – 9
EU0–U7354–00–05	23 – 9
EU0–U7354–00–10	23 – 9
EU0–U7354–00–20	23 – 9
F1B–U751G–00	31 – 18
F1W–U753C–01	31 – 9
F1W–U7550–01	31 – 1
F1W–U7555–00	31 – 8
F1K–U7557–01	17 – 8
GJ1–U7578–21	22 – 18
F1S–U757B–01	31 – 19
F1K–U757E–01	17 – 12
F1K–U757F–01	17 – 13
F2N–U758D–00	31 – 16
F1K–U759B–00	30 – 39
F1K–U759C–00	25 – 32
	31 – 11
F1W–U759C–01	30 – 40
F1B–U761D–02	26 – 10
F1K–U7711–02	30 – 12
F1K–U7711–10	30 – 12
F1W–U771H–00	26 – 39
F1B–U7773–00	30 – 13
F2N–U7831–10	30 – 16
GP7–U7832–01	30 – 17
GP7–U7833–11	30 – 18
GP7–U7834–00	30 – 21
GP7–U7835–00	30 – 19
GP7–U783F–00	30 – 23
F2N–U7844–00	30 – 24
F0D–U7856–10	30 – 32
F1K–U785G–00	30 – 30
F0D–U785G–10	22 – 10
GP7–U785H–00	30 – 27
F2N–U8169–00	26 – 31
F1K–U8211–01	22 – 6

PART NO.	REF. NO.
F1K–U821D–01	22 – 9
F1K–U8221–00	22 – 5
F1S–U8221–00	20 – 7
	30 – 41
	31 – 2
	31 – 15
F1W–U826C–00	22 – 32
F1K–U826C–03	26 – 46
F1S–U828H–01	20 – 2
F1K–U828K–00	25 – 34
F1W–U828M–00	20 – 3
	22 – 22
	22 – 25
	22 – 29
	28 – 3
	30 – 9
	31 – 24
	32 – 23
F1W–U8572–01	26 – 45
F1G–U8572–02	17 – 5
F2C–U8577–03	17 – 6
F2C–U883B–00	15 – 23
F2N–U883E–00	15 – 20
F1S–U883N–01	26 – 27
F1S–U883P–01	26 – 28
F1X–U883T–01	26 – 29
F1K–U892D–00	15 – 24
F1S–U8K31–02	22 – 19
6BH–W0001–00	38 – 1
6S5–W0001–22	38 – 22
6BH–W009A–01–94	2 – 1
6BH–W009B–11–94	3 – 4
90101–069U0	17 – 16
90105–06028	1 – 2
90105–06035	2 – 18
90105–06184	10 – 6
90105–06185	10 – 7
90105–06826	25 – 17
90105–06903	21 – 15
90105–06M07	3 – 12
90105–07004	5 – 4
90105–07009	2 – 6
90105–08054	10 – 9
90105–08169	10 – 10
90105–08170	10 – 11
90105–08860	26 – 30
90105–10071	3 – 5
90109–06268	3 – 38

PART NO.	REF. NO.
90109–06832	15 – 21
90109–06874	23 – 11
90109–06875	23 – 10
90109–08041	17 – 9
90110–05908	33 – 4
90110–06040	26 – 26
90110–06182	3 – 26
90110–06822	14 – 22
90110–08212	18 – 2
90111–05008	22 – 15
90111–06803	27 – 3
90116–08032	6 – 26
90119–059U4	25 – 9
90119–06048	21 – 10
	21 – 30
90119–06091	20 – 31
90119–06880	17 – 15
	24 – 11
	25 – 23
90119–06882	24 – 12
90119–06891	15 – 16
90119–06893	14 – 5
90119–06897	14 – 11
90119–069UH	30 – 34
	33 – 39
90119–069UP	29 – 5
90119–069UX	16 – 4
90119–06M35	20 – 12
90119–06MA3	21 – 9
90119–08022	6 – 25
90119–08034	12 – 4
	12 – 10
90119–08043	6 – 29
90119–08096	12 – 12
90119–08097	12 – 5
	12 – 9
90119–08099	6 – 30
90119–08800	17 – 18
90119–08823	23 – 8
90119–08827	33 – 41
90119–08829	17 – 4
90119–08836	33 – 37
90119–08840	14 – 36
	16 – 2
90119–08844	26 – 44
90119–08859	23 – 7
90119–089U2	29 – 14
90119–089U7	30 – 38

PART NO.	REF. NO.
90119–089UT	20 – 1
90119–089UU	15 – 18
90119–08M22	7 – 3
	21 – 12
90119–10029	12 – 13
90119–10806	14 – 33
90119–10809	17 – 7
90119–10810	14 – 3
90149–05903	25 – 3
	25 – 5
	34 – 6
90149–06229	18 – 8
90149–10052	23 – 6
90150–05807	22 – 21
90151–06815	32 – 13
90154–06017	34 – 5
90167–04003	34 – 7
90169–049U1	30 – 20
90170–20802	14 – 19
90176–08080	6 – 27
90179–09379	4 – 9
90183–06902	24 – 10
90201–052E8	18 – 21
90201–06028	9 – 8
90201–06801	16 – 6
	16 – 9
90201–06906	32 – 6
90201–099U3	29 – 7
90201–10801	14 – 39
90201–109U6	29 – 11
90201–12039	2 – 8
90267–329UR	30 – 22
90267–48802	20 – 4
90267–48806	28 – 8
90267–48963	27 – 12
90267–489U1	13 – 35
	21 – 4
	22 – 8
	25 – 31
	26 – 47
	30 – 36
	31 – 5
	31 – 7
90267–489U2	23 – 14
	30 – 5
	33 – 36
90267–489U6	22 – 23
	22 – 28

PART NO.	REF. NO.
90267–489U6	22 – 30
	28 – 4
	30 – 7
	30 – 10
	31 – 25
	32 – 25
90267–489U8	26 – 11
	27 – 8
90267–489U9	22 – 33
90269–08801	24 – 4
	24 – 6
90280–03047	18 – 10
90387–06080	17 – 14
90387–06119	1 – 8
	20 – 14
90387–06M05	18 – 22
90387–06M30	16 – 5
90387–06M60	15 – 15
90387–08M06	14 – 37
90387–08M30	16 – 3
90401–10040	5 – 23
90430–06232	10 – 8
90430–06M03	3 – 13
90430–08209	9 – 10
90430–10007	5 – 22
	38 – 7
90430–12002	17 – 11
90445–14807	14 – 30
90445–16013	13 – 32
90445–18012	13 – 16
90445–20800	26 – 4
90445–20804	26 – 1
90445–21806	13 – 1
90446–20MF5	14 – 31
90446–27M55	26 – 5
90446–27M73	26 – 2
90447–06803	32 – 8
90447–19005	13 – 17
90447–19011	13 – 30
90447–19020	6 – 22
90447–19021	13 – 25
90447–19022	14 – 28
90447–19801	13 – 7
90447–22011	13 – 12
90447–22015	11 – 2
90447–22016	11 – 6
90447–22801	13 – 2
90447–28008	2 – 20

PART NO.	REF. NO.
90450–17M17	6 – 23
90450–90001	7 – 4
	7 – 5
90450–90M10	12 – 20
90450–99801	31 – 12
	31 – 17
90450–99804	31 – 13
90450–99M06	12 – 19
90464–31001	21 – 18
	21 – 32
90464–32801	20 – 5
	22 – 17
	22 – 24
	22 – 26
	22 – 31
	26 – 37
	30 – 11
	31 – 26
	32 – 24
90464–35132	13 – 19
90464–40825	7 – 14
90464–99804	28 – 5
90465–11829	14 – 32
	22 – 13
	26 – 12
	30 – 28
	30 – 29
	30 – 31
	32 – 22
90465–13M18	21 – 17
90465–14M66	20 – 35
90467–089U1	22 – 11
90467–150A1	3 – 36
	13 – 23
90467–150A5	13 – 6
90467–160A0	13 – 18
	13 – 26
	13 – 28
	13 – 31
	13 – 33
90467–17802	31 – 27
90467–18804	26 – 6
90467–190A0	3 – 17
	11 – 3
	11 – 4
90467–200A0	26 – 14
90467–200A3	11 – 8
	13 – 3

PART NO.	REF. NO.
90467–200A3	13 – 13
	13 – 14
	13 – 21
90467–21800	26 – 13
90467–240A0	2 – 21
	11 – 7
90467–250A0	26 – 15
90480–22801	7 – 11
90480–22M15	7 – 1
	21 – 13
90480–38800	20 – 6
90601–118UF	14 – 29
	26 – 9
90601–155U4	15 – 22
	30 – 25
90601–170UG	31 – 10
90601–200U2	22 – 27
90605–502U1	24 – 3
91314–06020	8 – 4
91314–06060	9 – 7
91317–05010	18 – 20
91317–06014	18 – 19
91380–06016	21 – 25
91380–06020	18 – 23
91380–06025	5 – 20
91809–16001	2 – 4
	2 – 5
92014–06012	2 – 13
92903–06600	2 – 10
92903–08600	19 – 16
9290P–20600	14 – 18
92990–06100	19 – 17
92990–10600	21 – 20
92990–12200	17 – 10
	26 – 23
92995–06600	21 – 23
92995–08600	3 – 15
9299R–05200	26 – 35
	27 – 9
9299R–06200	25 – 19
	27 – 4
	32 – 11
9299R–08200	25 – 28
	26 – 49
	29 – 15
9299R–10200	29 – 12
93101–31001	14 – 16
	38 – 28

PART NO.	REF. NO.
93102–29008	15 – 5
	38 – 24
93102–29009	15 – 8
	38 – 25
93102–31009	14 – 15
	38 – 27
93210–11453	3 – 3
	38 – 4
93210–12790	3 – 37
	38 – 11
93210–18322	10 – 13
	38 – 10
93210–21631	8 – 6
	38 – 9
93210–22MF1	15 – 3
	38 – 23
93210–24M79	1 – 11
	38 – 12
93210–30611	14 – 25
	38 – 30
93210–60ME8	21 – 29
	38 – 17
93306–00805	18 – 12
93306–20654	14 – 12
93306–20655	15 – 7
93306–30582	14 – 14
93410–12003	19 – 7
93450–24028	4 – 6
93450–66156	15 – 6
93604–10011	6 – 3
93604–10M03	3 – 8
	10 – 5
93606–12019	3 – 7
	8 – 3
	12 – 8
	14 – 6
	15 – 14
93608–16M16	12 – 3
93700–06M03	15 – 10
94591–66152	5 – 14
94702–00427	21 – 16
95023–06025	3 – 24
95024–06014	3 – 20
95024–06020	3 – 21
	9 – 12
95024–06035	9 – 11
95024–08035	12 – 16
95024–08050	18 – 15

PART NO.	REF. NO.
95380–06700	19 – 18
9538R–06600	16 – 7
	16 – 10
9538R–06700	32 – 7
95720–06300	33 – 27
95720–08300	33 – 30
9572R–05300	26 – 36
9572R–06300	17 – 17
	25 – 18
	27 – 5
	30 – 15
	32 – 10
9572R–08300	25 – 29
	26 – 17
	26 – 48
	29 – 8
	29 – 16
	29 – 19
9572R–10300	14 – 40
	29 – 13
95780–08300	21 – 3
95814–06016	3 – 31
95814–06030	5 – 17
95814–06070	3 – 6
95814–08020	3 – 30
	9 – 9
95817–06014	9 – 6
95824–06025	1 – 9
97013–06055	2 – 9
97013–08030	19 – 15
97095–06016	21 – 22
97095–08040	3 – 14
97513–05514	18 – 9
97513–10525	2 – 15
97780–60516	7 – 10
97780–60520	20 – 33
97880–03008	33 – 14
97880–05025	33 – 17
9788R–05025	26 – 34
99009–72500	18 – 14
99530–10114	3 – 2
	3 – 27
	18 – 16
99590–14016	14 – 2
99780–12600	26 – 22