YAMAHA

PARTS CATALOGUE

WaveRunner FX HO

FB1800-M (F2T7/6CRC/6CR2)

FB1800-M (F2T8/6CRD/6CR2)

1MF2T-100EA

( )

YAMAHA
GENUINE
Parts & Accessories

FB1800-M
PARTS CATALOGUE
©2012 by Yamaha Motor Co., Ltd.
1st edition, September 2012
All rights reserved.
Any reprinting or unauthorized use
without the written permission of
Yamaha Motor Co., Ltd.
is expressly prohibited.
Printed in Japan.

FOREWORD

This Parts Catalogue is related to the parts for the model(s) on the cover page. When you are ordering replacement parts, please refer to this Parts Catalogue and quote both part numbers and part names correctly.

1. Modifications or additions which have been made after the issue of the Parts Catalogue will be announced in the Parts News.
   It is advisable that you make the necessary corrections to the Parts Catalogue according to the Parts News.

2. Abbreviations
   The following abbreviations are used in this Parts Catalogue.

   “UR” Use specified parts number.
   “UN” Use as many as needed.
   “AP” Alternate Parts
   “LM” Locally Made (Parts need to be ordered locally)
   “F#” Frame No. (Applicable machine No.)
   “O/S” Over Size

3. The number of components for assembly
   - Parts, which are to be supplied in an assembly, are listed with a dot (.) in front of the part name as shown below.
   - The numeral appearing to the right of each component part indicates the quantity of parts for each assembly unit.

PART NO.	DESCRIPTION	Q’TY	REMARKS
2F5–83310–60	FRONT FLASHER LIGHT ASSY	2	
115–83311–60	.BULB (6V–18W)	1	

4. Applicable colours of graphics are represented in the “REMARKS” as shown below.

PART NO.	DESCRIPTION	Q’TY	REMARKS
2N4–24110–00–X5	FUEL TANK COMP.	2	MXR
3J1–24240–10	.GRAPHIC, FUEL TANK	1	FOR MXR

5. Note that the illustrations for reference in finding parts numbers are not to be used for assembling. When assembling, please use the applicable service manual.

6. The asterisk (*) before a reference number indicates modified items after the first edition.

7. Applicable Serial No.

Engine Serial No.

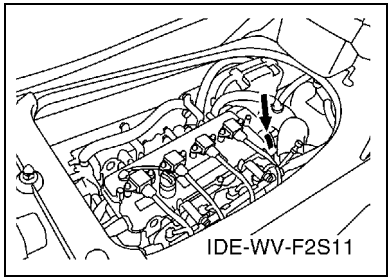

Primary Identification No.

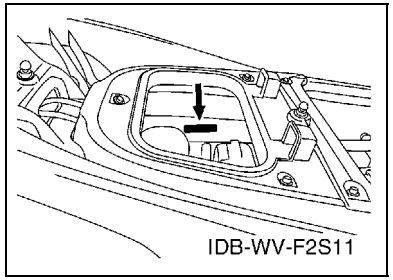

8. Applicable Colour Code (The (*) mark shows Model colour.)

Abbreviation	Colour Name	Colour Code
DRMR(*)	DEEP RED METALLIC R	1080

9. Quantity Column Information

Column No.	Name Of Q'ty Column	Destination
1	CAN	CANADA
2	EUR	EUROPE

10. Applicable Starting Serial No.

Engine Serial No.

Serial No.	Name Of Q'ty Column	Model Code
6CR-1003001	CAN	6CRC
6CR-1003001	EUR	6CRD

Primary Identification No.

Serial No.	Name Of Q'ty Column	Model Code
F2T-803101	CAN	F2T7
F2T-803101	EUR	F2T8

CONTENTS

CYLINDER 1 1
CYLINDER 2 2
CRANKCASE 3
CRANKSHAFT & PISTON 5
VALVE 6
INTAKE 1 8
INTAKE 2 10
OIL PUMP 11
OIL PAN 12
OIL COOLER 13
BREATHER OIL 14
EXHAUST 1 15
EXHAUST 2 16
JET UNIT 1 18
JET UNIT 2 20
JET UNIT 3 21
JET UNIT 4 22
GENERATOR 24
STARTING MOTOR 25
ELECTRICAL 1 26
ELECTRICAL 2 28
ELECTRICAL 3 30
ENGINE MOUNT 32
ENGINE HATCH 1 33
ENGINE HATCH 2 35
HULL & DECK 37
HULL & DECK 2 39
GUNWALE & MAT 40
VENTILATION 41
SEAT & UNDER LOCKER 42
SEAT & UNDER LOCKER 2 43
FUEL TANK 45
BILGE PUMP 47
EXHAUST 3 48
CONTROL CABLE 49
STEERING 1 51
STEERING 2 52
STEERING 3 54
GRAPHICS 55
IMPORTANT LABELS 56
REPAIR KIT 1 57

INDEX

NUMERICAL INDEX 59

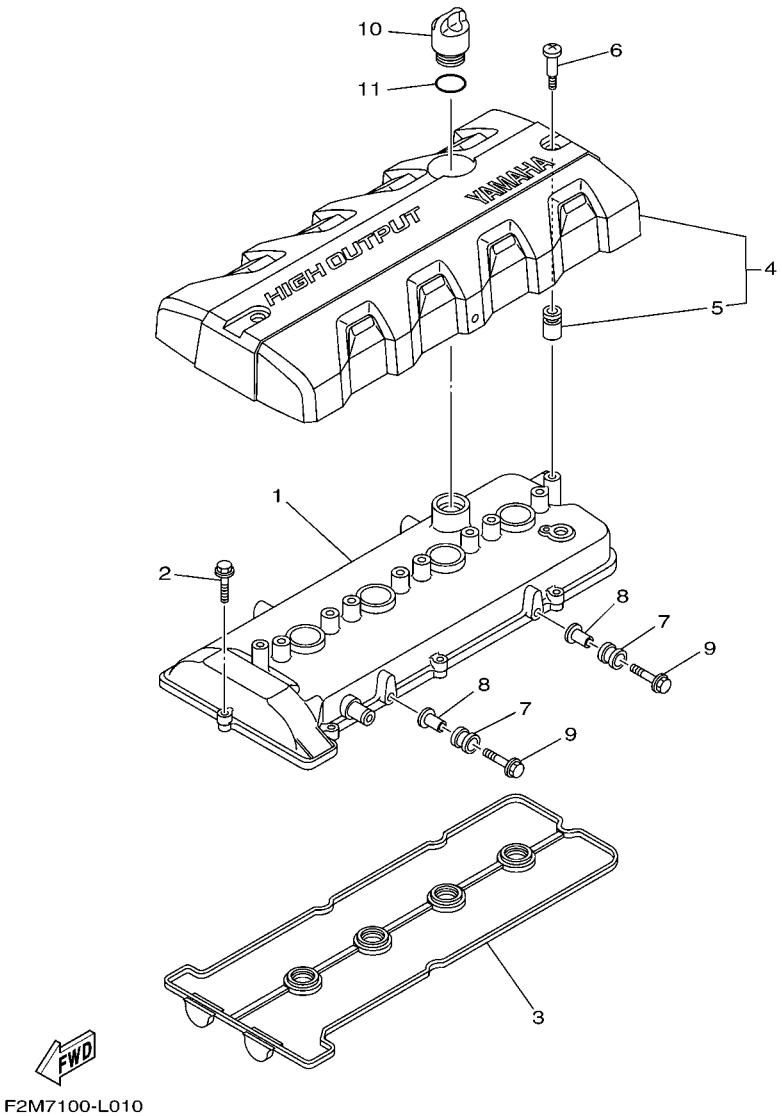

FIG. 1 CYLINDER 1

REF. NO.	PART NO.	DESCRIPTION	CAN	EUR				REMARKS
1	6BH–11191–20	COVER, CYLINDER HEAD 1	1	1				
2	90105–06028	BOLT, FLANGE	8	8				
3	6BH–11193–00	GASKET, HEAD COVER 1	1	1				
4	6BH–E110M–00	COVER ASSY 1	1	1				
5	6S5–E1328–00	.GROMMET, ANODE	1	1				
6	6S5–E118E–00	BOLT, COVER MOUNTING	2	2				
7	61N–82317–00	DAMPER, IGNITION COIL	2	2				
8	90387–06119	COLLAR	2	2				
9	95824–06025	BOLT, FLANGE	2	2				
10	6S5–15363–00	PLUG, OIL	1	1				
11	93210–24M79	O-RING	1	1				

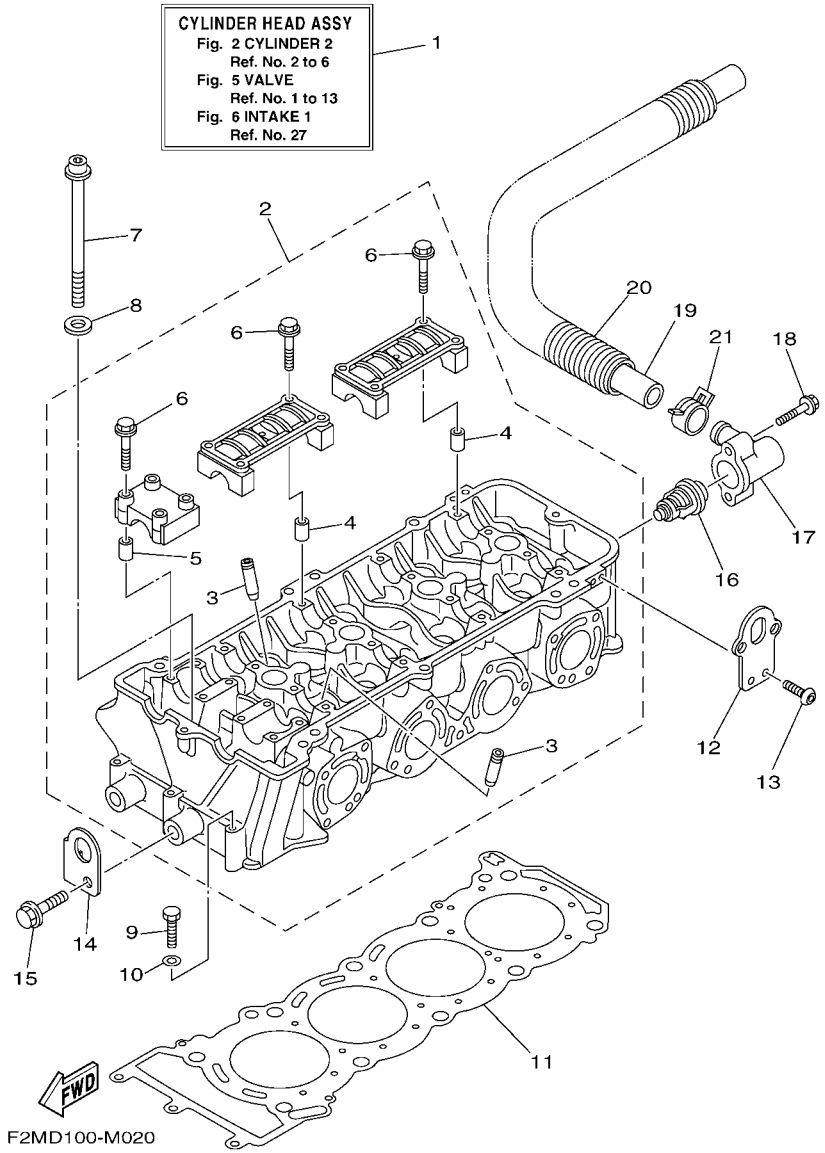

FIG. 2 CYLINDER 2

REF. NO.	PART NO.	DESCRIPTION	CAN	EUR				REMARKS
1	6BH–W009A–02–94	CYLINDER HEAD COMPLETE	1	1				
2	6BH–11102–11	CYLINDER HEAD ASSY	1	1				
3	6S5–11133–10	.GUIDE, VALVE 1	16	16				
4	91809–16002	.PIN, DOWEL	8	8				
5	91809–16002	.PIN, DOWEL	4	4				
6	90105–07009	.BOLT, FLANGE	24	24				
7	6S5–12228–01	BOLT	10	10				
8	90201–12039	WASHER, PLATE	10	10				
9	97013–06055	BOLT	3	3				
10	92903–06600	WASHER, PLATE	3	3				
11	6BH–11181–00	GASKET, CYLINDER HEAD 1	1	1				
12	6BH–1111E–00	HANGER, ENGINE 2	2	2				
13	92014–06012	BOLT, BUTTON HEAD	4	4				
14	6BH–11119–00	HANGER, ENGINE	1	1				
15	97513–10525	BOLT, WITH WASHER	1	1				
16	6D3–12411–00	THERMOSTAT	1	1				
17	6BH–12413–00	COVER, THERMOSTAT	1	1				
18	90105–06035	BOLT, FLANGE	2	2				
19	6S5–12578–00	HOSE 3	1	1				
20	90447–28008	TUBE (L850)	1	1				
21	90467–240A0	CLIP	1	1				

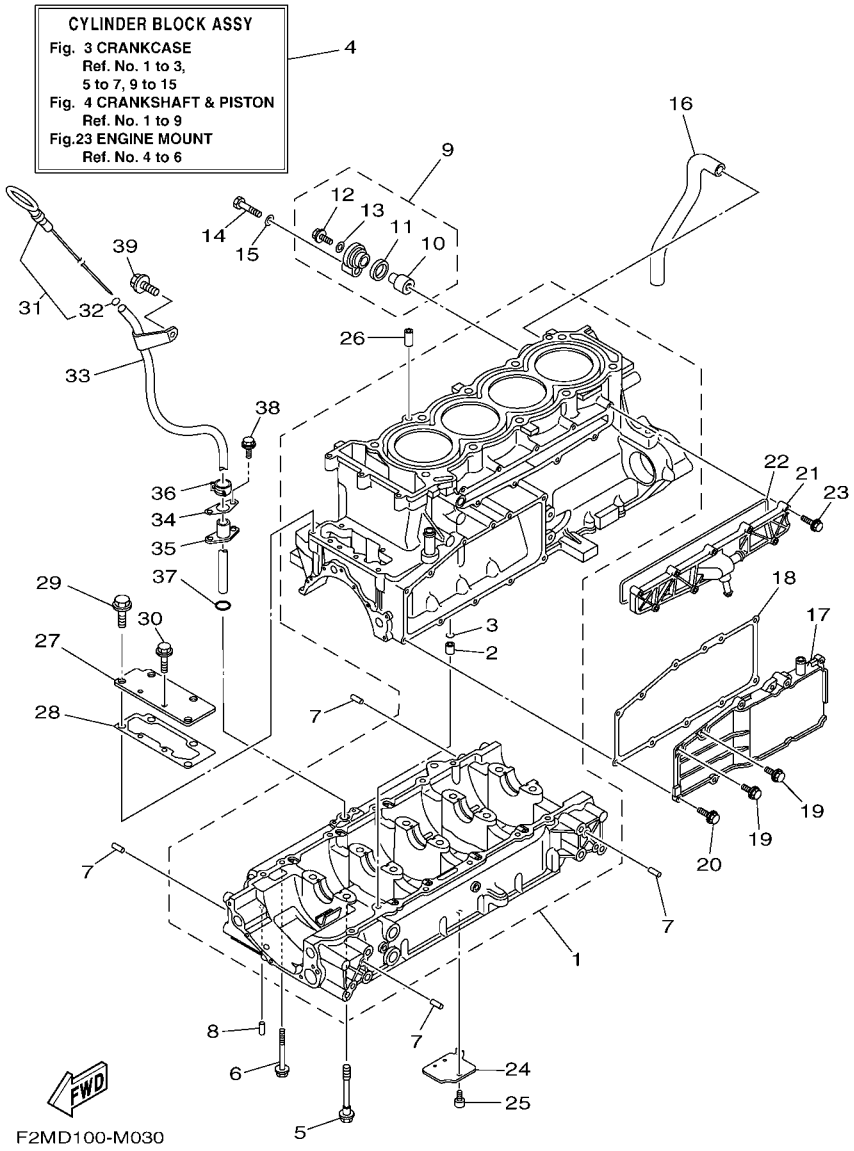

FIG. 3 CRANKCASE

REF. NO.	PART NO.	DESCRIPTION	CAN	EUR				REMARKS
1	6CR–15100–10	CRANKCASE ASSY	1	1				
2	99530–10114	.PIN, DOWEL	1	1				
3	93210–11453	.O-RING	1	1				
4	6CR–W009B–10–94	CYLINDER BLOCK ASSY	1	1				
5	90105–10071	BOLT, FLANGE	10	10				
6	95814–06070	BOLT, FLANGE	12	12				
7	93606–12019	PIN, DOWEL	8	8				
8	93604–10M03	PIN, DOWEL	2	2				
9	69J–11301–10	ANODE COVER ASSY	1	1				
10	68V–11325–02	.ANODE	1	1				
11	67F–11328–00	.GROMMET, ANODE	1	1				
12	90105–06M07	.BOLT, FLANGE	1	1				
13	90430–06M03	.GASKET	1	1				
14	97095–08040	BOLT	1	1				
15	92995–08600	WASHER	1	1				
16	6S5–11377–00	HOSE	1	1				
17	6S5–1131M–10–8P	COVER	1	1				
18	6BH–13557–00	GASKET	1	1				
19	95024–06014	BOLT, FLG.(SMALL HEAD)	2	2				
20	95024–06020	BOLT, FLG.(SMALL HEAD)	9	9				
21	6CS–12469–A0	JOINT 1	1	1				
22	6CS–12517–00	GASKET, WATER INLET	1	1				
23	95814–06035	BOLT, FLANGE	9	9				
24	6S5–13337–10	PLATE, BAFFLE LOWER	1	1				
25	90110–06182	BOLT, HEXAGON SOCKET HEAD	1	1				
26	99530–10114	PIN, DOWEL	2	2				
27	6BH–1131C–00	COVER, JOINT	1	1				

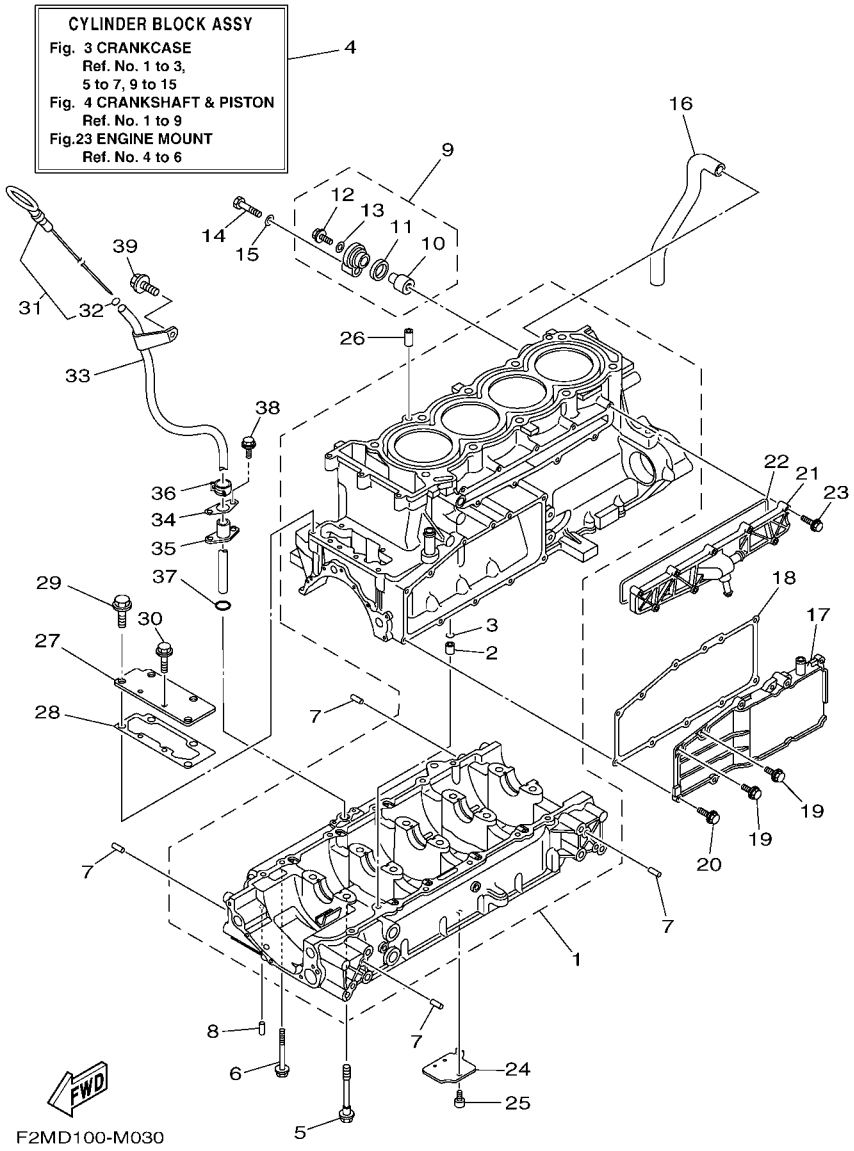

FIG. 3 CRANKCASE

REF. NO.	PART NO.	DESCRIPTION	CAN	EUR				REMARKS
28	6BH–1131B–00	GASKET, COVER	1	1				
29	95814–08020	BOLT, FLANGE	4	4				
30	95814–06016	BOLT, FLANGE	2	2				
31	6CS–15362–00	PLUG, OIL LEVEL	1	1				
32	93210–06632	.O-RING	1	1				
33	6CS–8572F–00	PIPE, OIL LEVEL	1	1				
34	6BH–1319K–00	PLATE	1	1				
35	6CS–85516–00	SPACER	1	1				
36	90467–150A1	CLIP	1	1				
37	93210–12016	O-RING	1	1				
38	90109–06268	BOLT	2	2				
39	90105–08021	BOLT, FLANGE	1	1				

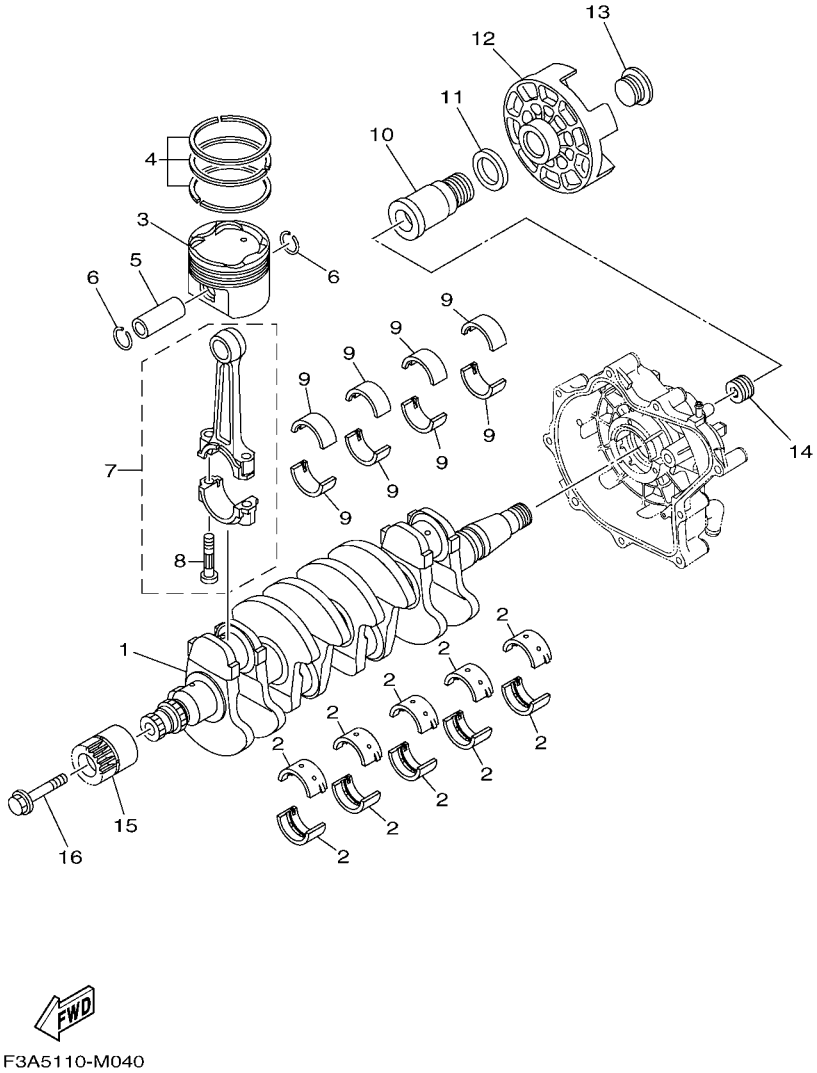

FIG. 4 CRANKSHAFT & PISTON

REF. NO.	PART NO.	DESCRIPTION	CAN	EUR				REMARKS
1	6S5–11411–00	CRANKSHAFT	1	1				
2	6S5–11416–00	PLANE BEARING, CRANKSHAFT 1	10	10				UR BROWN
	6S5–11416–10	PLANE BEARING, CRANKSHAFT 1	10	10				UR BLACK
	6S5–11416–20	PLANE BEARING, CRANKSHAFT 1	10	10				UR BLUE
	6S5–11416–30	PLANE BEARING, CRANKSHAFT 1	10	10				UR GREEN
	6S5–11416–40	PLANE BEARING, CRANKSHAFT 1	10	10				UR YELLOW
3	6BH–11631–00–B0	PISTON (STD)	4	4				
4	6S5–11603–00	PISTON RING SET (STD)	4	4				
5	6S5–11633–00	PIN, PISTON	4	4				
6	93450–24028	CIRCLIP	8	8				
7	6BH–11650–10	CONNECTING ROD ASSY	4	4				
8	6S5–11654–10	.BOLT, CONNECTING ROD	2	2				
9	6S5–11656–40	PLANE BEARING, CONNECTING ROD	8	8				UR BLUE
	6S5–11656–50	PLANE BEARING, CONNECTING ROD	8	8				UR BLACK
	6S5–11656–60	PLANE BEARING, CONNECTING ROD	8	8				UR BROWN
	6S5–11656–70	PLANE BEARING, CONNECTING ROD	8	8				UR GREEN
10	6S5–17572–01	SHAFT, TRANSFER	1	1				
11	6S5–12289–00	WASHER	1	1				
12	6S5–45813–01–94	FLANGE, COUPLING	1	1				
13	6S5–17525–01	HOLDER 2	1	1				
14	6S5–11459–01	NUT, SPECIAL	1	1				
15	6BH–17586–10	GEAR, TRANSFER DRIVE	1	1				
16	6S5–17031–00	BOLT	1	1				

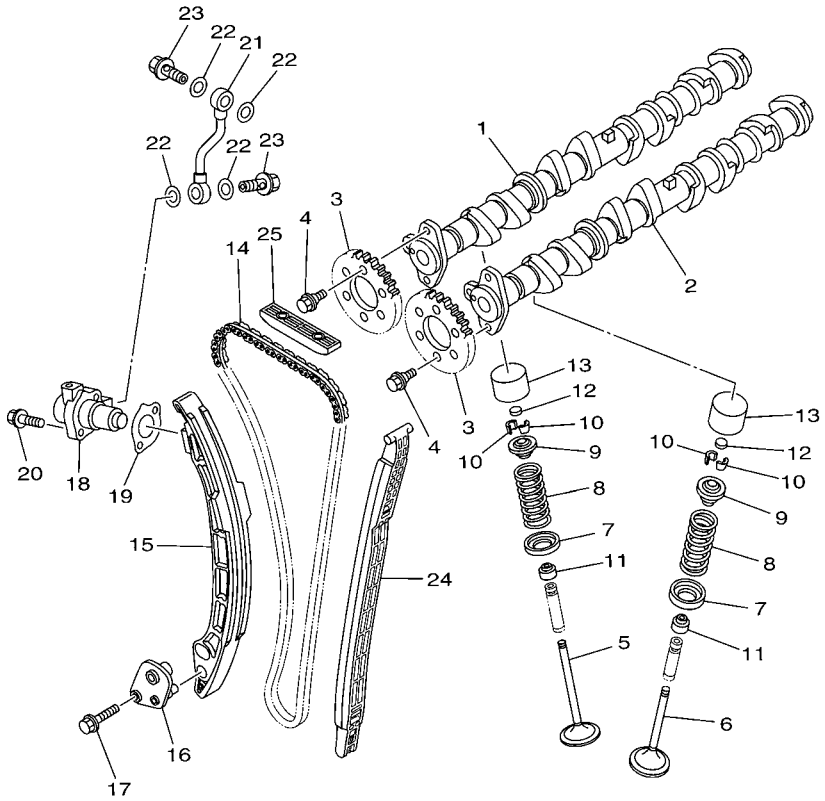

F2H1100-H050

FIG. 5 VALVE

REF. NO.	PART NO.	DESCRIPTION	CAN	EUR				REMARKS
1	6BH–12171–10	CAMSHAFT 1	1	1				
2	6BH–12181–10	CAMSHAFT 2	1	1				
3	6D3–12176–10	SPROCKET, CAM CHAIN	2	2				
4	90105–07004	BOLT, FLANGE	4	4				
5	6S5–12111–00	VALVE, INTAKE	8	8				
6	6S5–12121–00	VALVE, EXHAUST	8	8				
7	6S5–12116–00	SEAT, VALVE SPRING	16	16				
8	6S5–12113–00	SPRING, VALVE INNER	16	16				
9	6S5–12117–00	RETAINER, VALVE SPRING	16	16				
10	3LD–12118–00	LOCK, VALVE SPRING RETAINER	32	32				
11	51Y–12119–00	SEAL, VALVE STEM	16	16				
12	3LD–12168–00	PAD, ADJUSTING (1.20)	16	16				UR
	3LD–12168–20	PAD, ADJUSTING (1.25)	16	16				UR
	3LD–12168–40	PAD, ADJUSTING (1.30)	16	16				UR
	3LD–12168–60	PAD, ADJUSTING (1.35)	16	16				UR
	3LD–12168–80	PAD, ADJUSTING (1.40)	16	16				UR
	3LD–12168–A0	PAD, ADJUSTING (1.45)	16	16				UR
	3LD–12168–F0	PAD, ADJUSTING (1.50)	16	16				UR
	3LD–12168–H1	PAD, ADJUSTING (1.55)	16	16				UR
	3LD–12168–K1	PAD, ADJUSTING (1.60)	16	16				UR
	3LD–12168–M1	PAD, ADJUSTING (1.65)	16	16				UR
	3LD–12168–R1	PAD, ADJUSTING (1.70)	16	16				UR
	3LD–12168–U1	PAD, ADJUSTING (1.75)	16	16				UR
	3LD–12168–W1	PAD, ADJUSTING (1.80)	16	16				UR
	3LD–12168–Y1	PAD, ADJUSTING (1.85)	16	16				UR
	3LD–12169–11	PAD, ADJUSTING (1.90)	16	16				UR
	3LD–12169–31	PAD, ADJUSTING (1.95)	16	16				UR

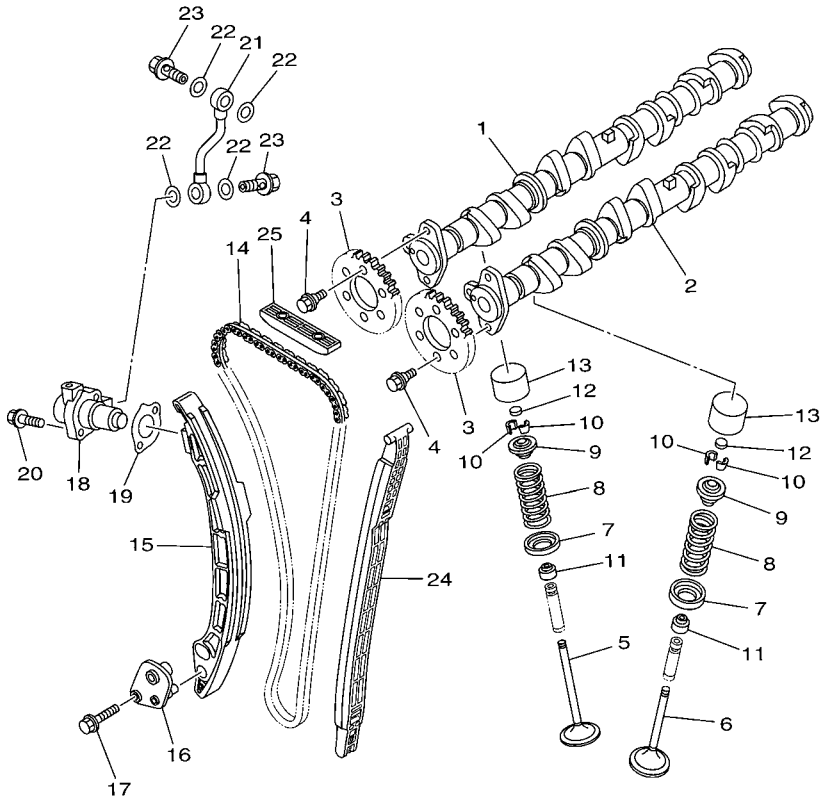

F2H1100-H050

FIG. 5 VALVE

REF. NO.	PART NO.	DESCRIPTION	CAN	EUR				REMARKS
12	3LD–12169–50	PAD, ADJUSTING (2.00)	16	16				UR
	3LD–12169–70	PAD, ADJUSTING (2.05)	16	16				UR
	3LD–12169–90	PAD, ADJUSTING (2.10)	16	16				UR
	3LD–12169–E0	PAD, ADJUSTING (2.15)	16	16				UR
	3LD–12169–G0	PAD, ADJUSTING (2.20)	16	16				UR
	3LD–12169–J0	PAD, ADJUSTING (2.25)	16	16				UR
	3LD–12169–L0	PAD, ADJUSTING (2.30)	16	16				UR
13	6S5–12153–00	LIFTER, VALVE	16	16				
14	94591–66152	CHAIN	1	1				
15	6BH–12252–00	DAMPER, CHAIN 2	1	1				
16	6BH–12279–00	PLATE	1	1				
17	95814–06030	BOLT, FLANGE	2	2				
18	6S5–12210–00	TENSIONER ASSY, CAM CHAIN	1	1				
19	6S5–121E2–00	GASKET	1	1				
20	91380–06025	BOLT	2	2				
21	6S5–13418–00	PIPE, OIL 2	1	1				
22	90430–10007	GASKET	4	4				
23	90401–10040	BOLT, UNION	2	2				
24	6BH–12251–00	DAMPER, CHAIN 1	1	1				
25	6BH–12241–00	GUIDE, STOPPER 2	1	1				

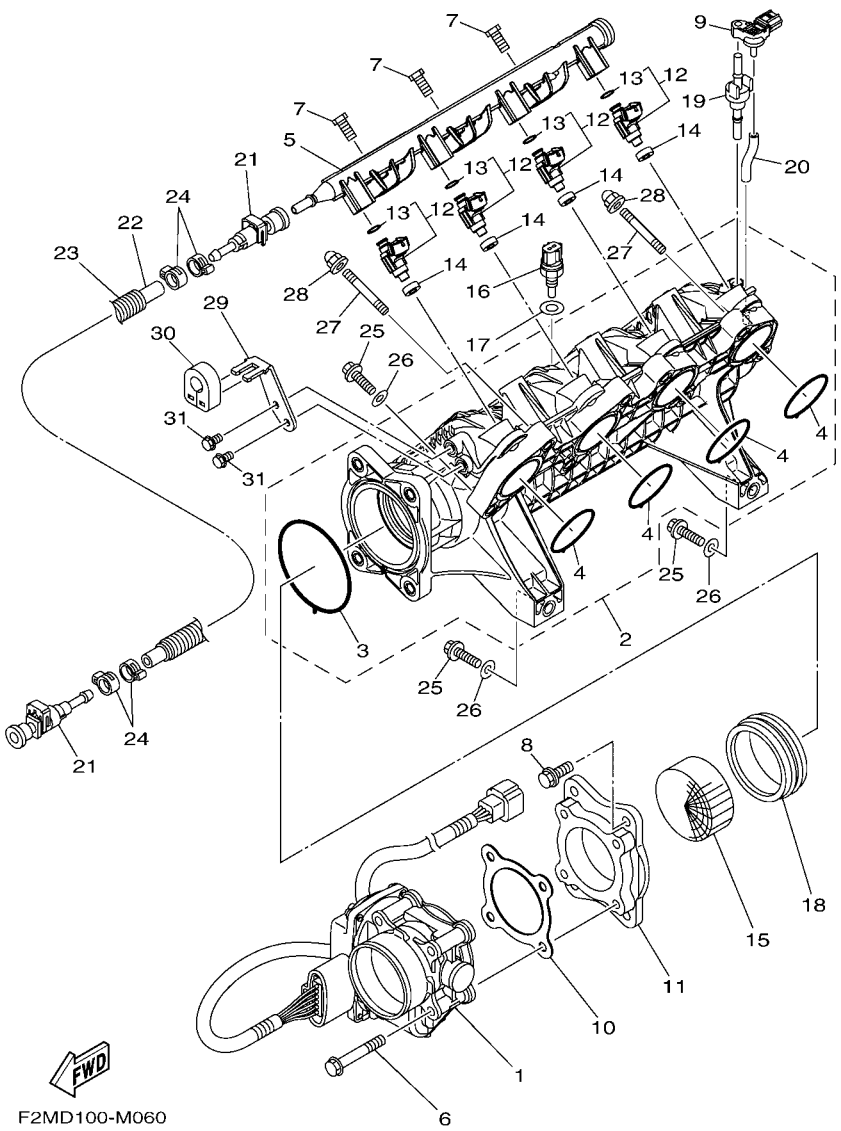

FIG. 6 INTAKE 1

REF. NO.	PART NO.	DESCRIPTION	CAN	EUR				REMARKS
1	6BH–13750–00	THROTTLE BODY ASSY	1	1				
2	6BH–13641–10	MANIFOLD, INTAKE 1	1	1				
3	6BH–14156–00	.GASKET, INSULATING	1	1				
4	6BH–14126–00	.GASKET	4	4				
5	6CS–12880–00	DELIVERY PIPE	1	1				
6	90105–08243	BOLT, FLANGE	4	4				
7	6CS–14446–00	BOLT	3	3				
8	97513–08525	BOLT, WITH WASHER	4	4				
9	6BH–82380–00	SENSOR, PRESSURE	1	1				
10	6CR–14536–00	GASKET	1	1				
11	6CR–14163–00	SPACER	1	1				
12	6S5–13761–10	INJECTOR	4	4				
13	68V–1416A–00	.O-RING	1	1				
14	8FP–13556–10	GASKET, MANIFOLD	4	4				
15	6D3–1444B–00	RIBBON	1	1				
16	65L–85886–00	THERMOSENSOR	1	1				
17	6S5–14285–00	WASHER	1	1				
18	6S5–14457–00	HOLDER	1	1				
19	6BH–14445–00	GROMMET	1	1				
20	6BH–13532–00	HOSE, VACUUM SENSING 3	1	1				
21	6S5–24300–01	FUEL PIPE JOINT	2	2				
22	6AN–14294–10	HOSE	1	1				
23	90447–19017	TUBE (L495)	1	1				
24	90450–17M17	HOSE CLAMP ASSY	4	4				
25	97013–08035	BOLT	8	8				
26	92903–08600	WASHER, PLATE	8	8				
27	90116–08032	BOLT, STUD	2	2				

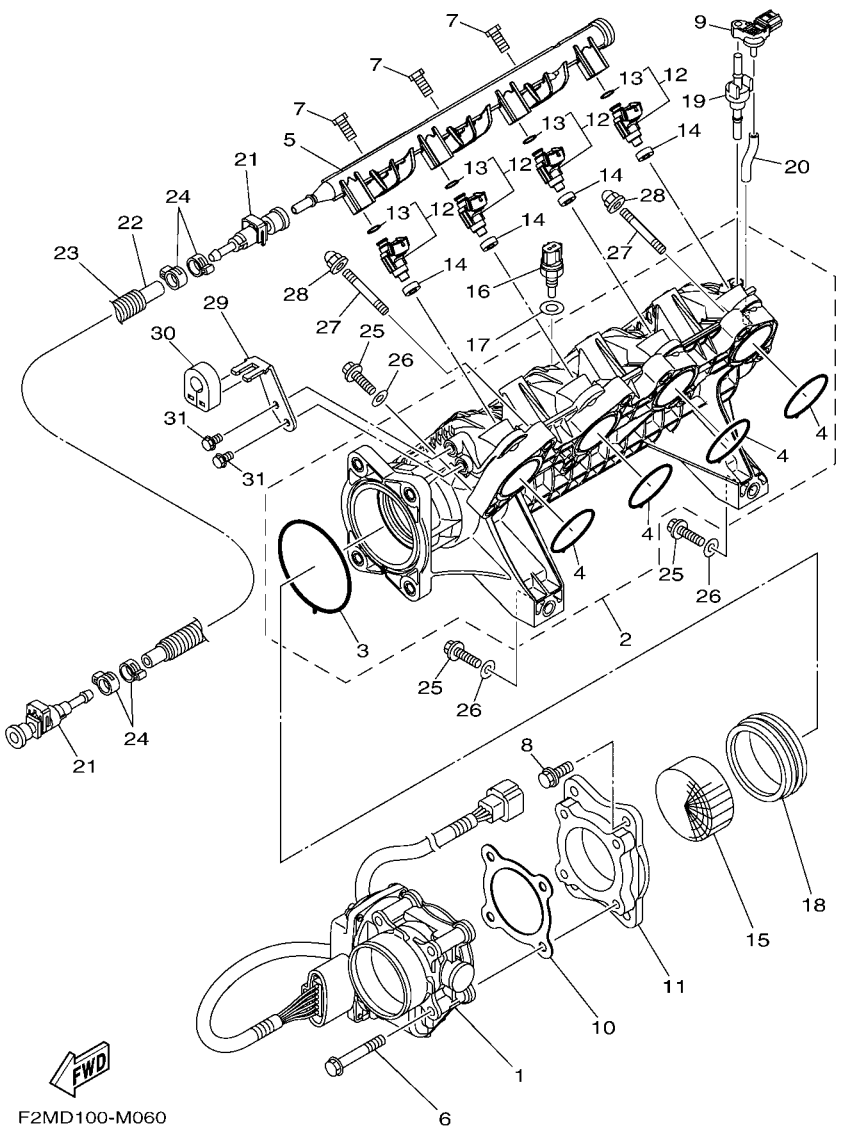

FIG. 6 INTAKE 1

REF. NO.	PART NO.	DESCRIPTION	CAN	EUR				REMARKS
28	90176–08080	NUT, CROWN	2	2				
29	6CR–14572–00	PLATE, STAY	1	1				
30	6CS–14445–00	GROMMET	1	1				
31	95023–06012	BOLT	2	2				

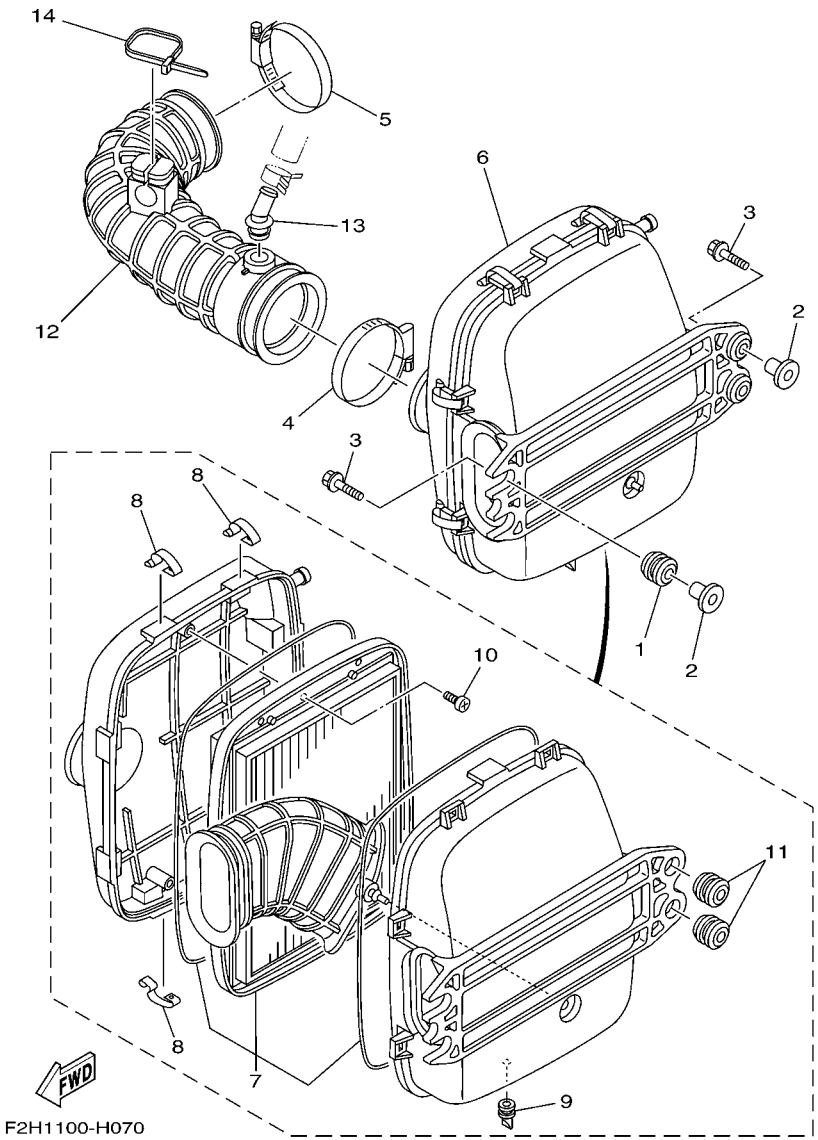

FIG. 7 INTAKE 2

REF. NO.	PART NO.	DESCRIPTION	CAN	EUR				REMARKS
1	90480–22M15	GROMMET	2	2				
2	6D3–14495–00	COLLAR	4	4				
3	90119–08M22	BOLT, WITH WASHER	4	4				
4	90450–90002	HOSE CLAMP ASSY	1	1				
5	90450–90002	HOSE CLAMP ASSY	1	1				
6	6S5–E4410–01	AIR CLEANER ASSY.	1	1				
7	6S5–E4451–00	.ELEMENT, AIR CLEANER	1	1				
8	6S5–E4436–00	.HOOK	8	8				
9	6S5–G2717–00	.RUBBER, SEAL 2	1	1				
10	97780–60516	.SCREW, TAPPING	3	3				
11	90480–22801	.GROMMET	2	2				
12	6BH–E4419–00	PIPE	1	1				
13	6BH–R1142–10	CONNECTION	1	1				
14	90464–40825	CLAMP	1	1				

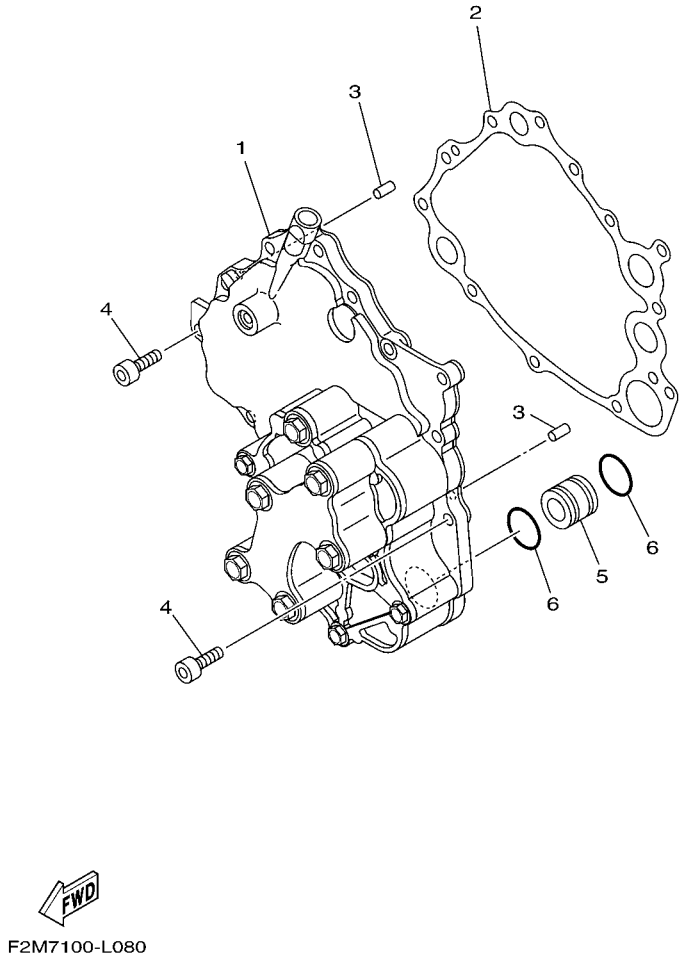

FIG. 8 OIL PUMP

REF. NO.	PART NO.	DESCRIPTION	CAN	EUR				REMARKS
1	6BH–13300–11	OIL PUMP ASSY	1	1				
2	6S5–13563–00	GASKET	1	1				
3	93606–12019	PIN, DOWEL	2	2				
4	91314–06020	BOLT, HEXAGON SOCKET HEAD	12	12				
5	6S5–13446–10	CONNECTOR	1	1				
6	93210–21631	O-RING	2	2				

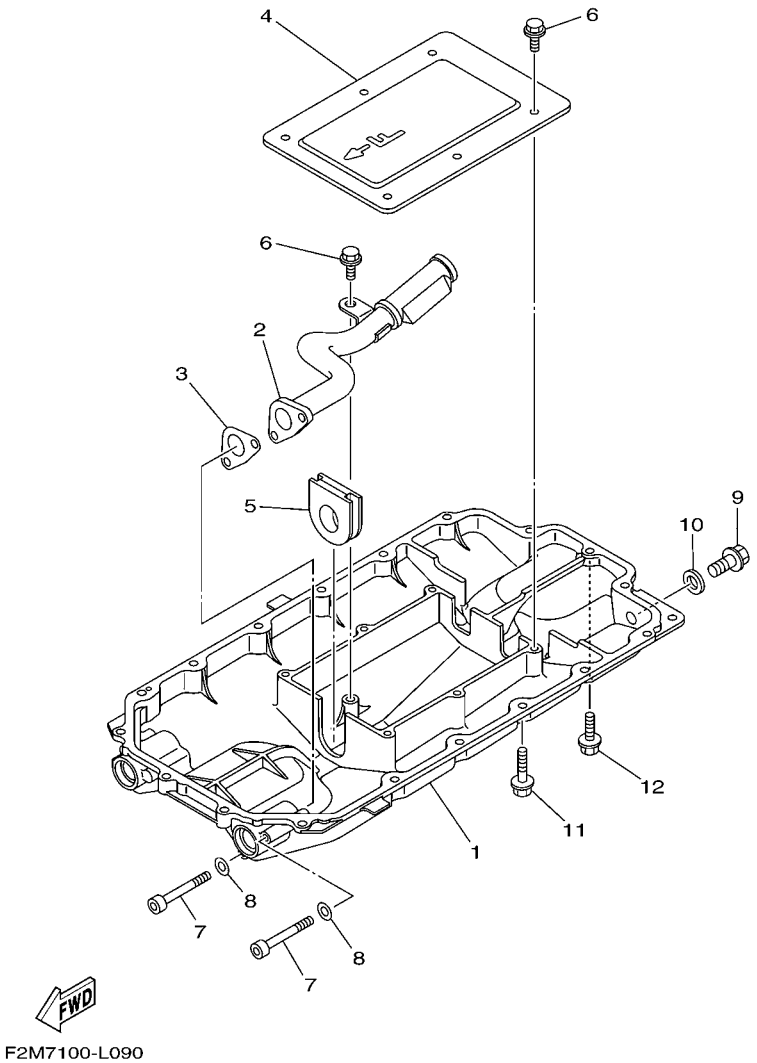

FIG. 9 OIL PAN

REF. NO.	PART NO.	DESCRIPTION	CAN	EUR				REMARKS
1	6S5–1310A–20	PAN, OIL	1	1				
2	6S5–13405–10	OIL PIPE COMP. 1	1	1				
3	6S5–13477–00	GASKET	1	1				
4	6S5–13317–10	PLATE, BAFFLE	1	1				
5	6S5–15486–10	GROMMET	1	1				
6	95817–06014	BOLT, FLANGE	7	7				
7	91314–06060	BOLT, HEXAGON SOCKET HEAD	2	2				
8	90201–06028	WASHER, PLATE	2	2				
9	95814–08020	BOLT, FLANGE	1	1				
10	90430–08209	GASKET	1	1				
11	95024–06035	BOLT, FLG.(SMALL HEAD)	17	17				
12	95024–06020	BOLT, FLG.(SMALL HEAD)	1	1				

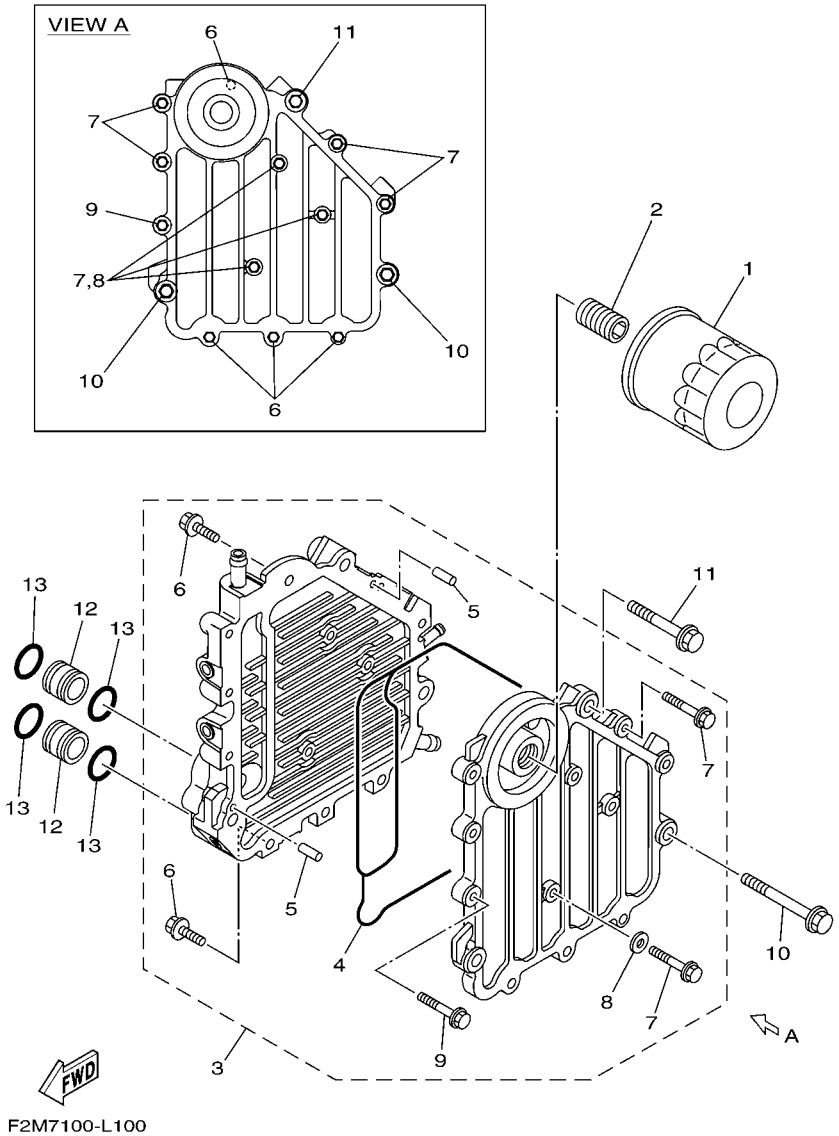

FIG. 10 OIL COOLER

REF. NO.	PART NO.	DESCRIPTION	CAN	EUR				REMARKS
1	69J–13440–01	ELEMENT ASSY, OIL CLEANER	1	1				
2	6S5–12858–00	BOLT, UNION	1	1				
3	6BH–13470–20	OIL COOLER ASSY	1	1				
4	6BH–13556–00	.GASKET, MANIFOLD	1	1				
5	93604–10M03	.PIN, DOWEL	2	2				
6	90105–06184	.BOLT, FLANGE	4	4				
7	90105–06185	.BOLT, FLANGE	7	7				
8	90430–06232	.GASKET	3	3				
9	90105–08054	.BOLT, FLANGE	1	1				
10	90105–08169	BOLT, FLANGE	2	2				
11	90105–08170	BOLT, FLANGE	1	1				
12	60E–13446–00	CONNECTOR	2	2				
13	93210–18322	O-RING	4	4				

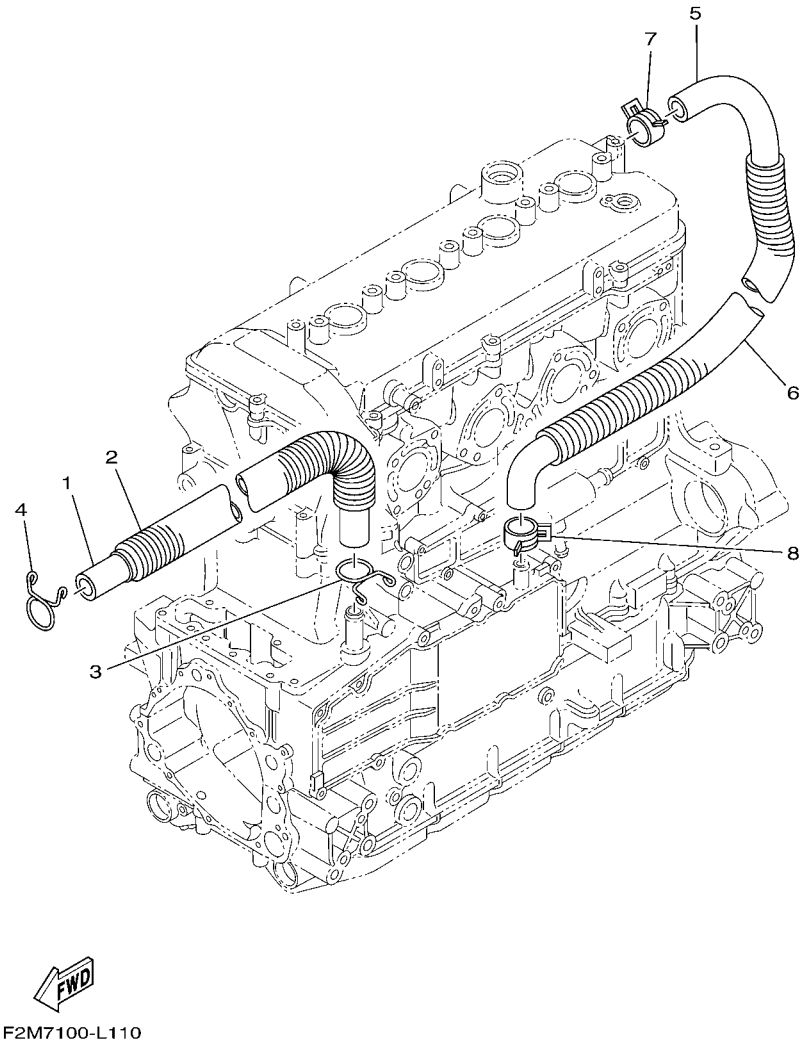

FIG. 11 BREATHER OIL

REF. NO.	PART NO.	DESCRIPTION	CAN	EUR				REMARKS
1	6S5–11166–10	PIPE, BREATHER 1	1	1				
2	90447–22015	TUBE (L410)	1	1				
3	90467–190A0	CLIP	1	1				
4	90467–190A0	CLIP	1	1				
5	6S5–11167–10	PIPE, BREATHER 2	1	1				
6	90447–22016	TUBE (L490)	1	1				
7	90467–240A0	CLIP	1	1				
8	90467–200A3	CLIP	1	1				

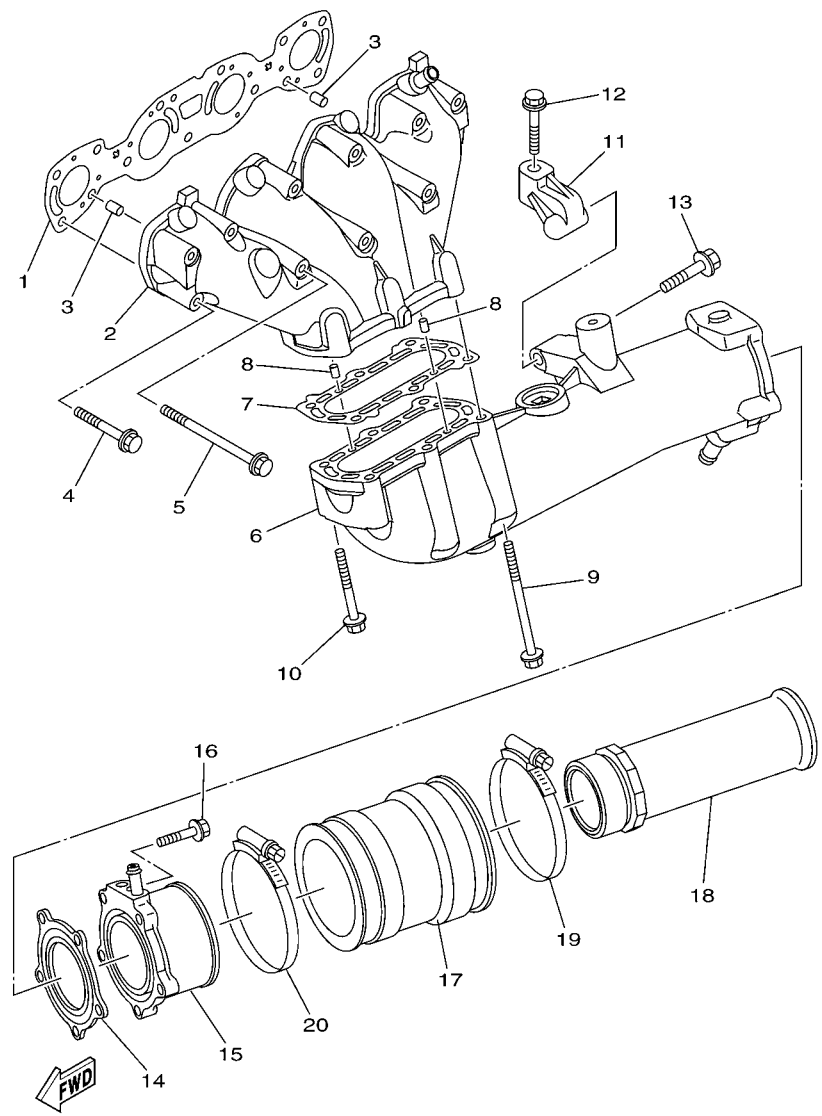

F2H1100-H120

FIG. 12 EXHAUST 1

REF. NO.	PART NO.	DESCRIPTION	CAN	EUR				REMARKS
1	6BH–14613–00	GASKET, EXHAUST PIPE	1	1				
2	6BH–14711–10	MUFFLER 1	1	1				
3	93608–16M16	PIN, DOWEL	2	2				
4	90119–08034	BOLT, WITH WASHER	8	8				
5	90119–08097	BOLT, WITH WASHER	3	3				
6	6BH–14721–10	MUFFLER 2	1	1				
7	6S5–14739–00	GASKET, MUFFLER DAMPER 1	1	1				
8	93606–12019	PIN, DOWEL	2	2				
9	90119–08097	BOLT, WITH WASHER	4	4				
10	90119–08034	BOLT, WITH WASHER	2	2				
11	6S5–14771–00–94	STAY, MUFFLER 1	1	1				
12	90119–08096	BOLT, WITH WASHER	1	1				
13	90119–10029	BOLT, WITH WASHER	1	1				
14	6BH–14749–00	GASKET, MUFFLER DAMPER 2	1	1				
15	6BH–14784–01–94	PIPE, TAIL	1	1				
16	95024–08035	BOLT, FLG.(SMALL HEAD)	5	5				
17	6S5–14752–00	PIPE, OUTLET	1	1				
18	6S5–1475A–00	PIPE 1	1	1				
19	90450–99016	HOSE CLAMP ASSY	1	1				
20	90450–99015	HOSE CLAMP ASSY	1	1				

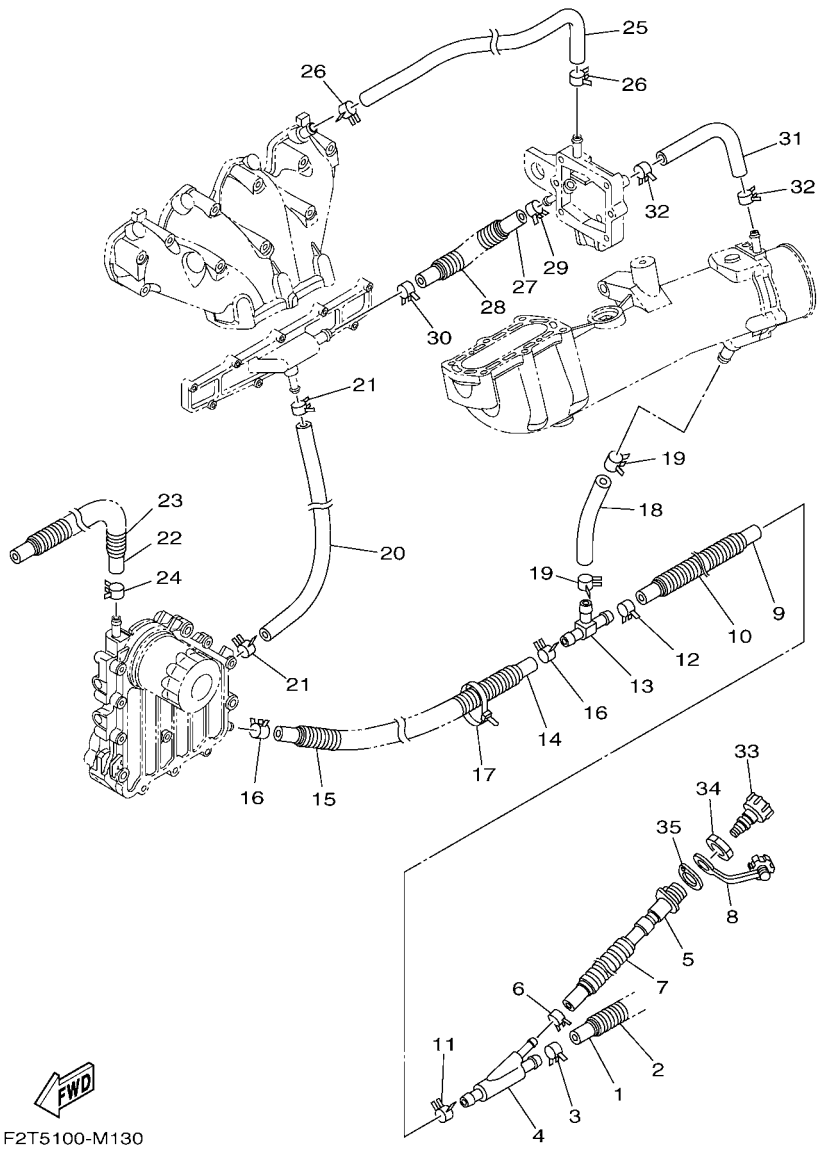

FIG. 13 EXHAUST 2

REF. NO.	PART NO.	DESCRIPTION	CAN	EUR				REMARKS
1	90445–21806	HOSE (L250)	1	1				
2	90447–22801	TUBE (L200)	1	1				
3	90467–200A3	CLIP	1	1				
4	60E–12581–00	JOINT, HOSE 1	1	1				
5	6CS–12580–00	JOINT ASSY	1	1				
6	90467–150A5	CLIP	1	1				
7	90447–19801	TUBE (L485)	1	1				
8	682–84385–01	CAP,1	1	1				
9	6S5–1243E–01	HOSE 2	1	1				
10	90447–22011	TUBE (L170)	1	1				
11	90467–200A3	CLIP	1	1				
12	90467–200A3	CLIP	1	1				
13	6BH–12584–00	JOINT, HOSE 3	1	1				
14	90445–18012	HOSE (L400)	1	1				
15	90447–19005	TUBE (L260)	1	1				
16	90467–160A0	CLIP	2	2				
17	90464–35132	CLAMP	1	1				
18	6S5–12589–01	HOSE 6	1	1				
19	90467–200A3	CLIP	2	2				
20	6BH–1244H–00	HOSE 5	1	1				
21	90467–150A1	CLIP	2	2				
22	6CS–12588–00	HOSE 5	1	1				
23	90447–19018	TUBE (L760)	1	1				
24	90467–160A0	CLIP	1	1				
25	6BH–12577–00	HOSE 2	1	1				
26	90467–160A0	CLIP	2	2				
27	6S5–12579–00	HOSE 4	1	1				

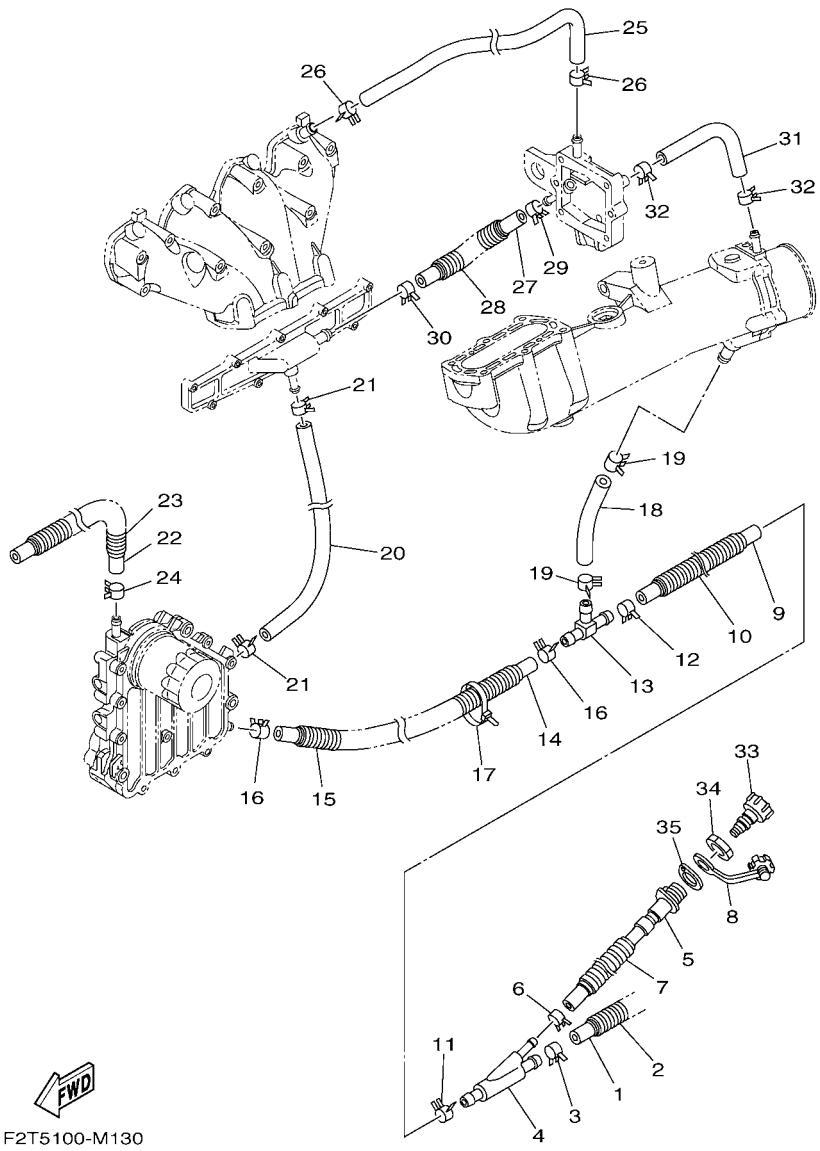

FIG. 13 EXHAUST 2

REF. NO.	PART NO.	DESCRIPTION	CAN	EUR				REMARKS
28	90447–19011	TUBE (L150)	1	1				
29	90467–160A0	CLIP	1	1				
30	90467–170A5	CLIP	1	1				
31	90445–16013	HOSE (L220)	1	1				
32	90467–160A0	CLIP	2	2				
33	67X–E2590–10	CONDUCTION ASSY	1	1				
34	EU0–61652–00	NUT	1	1				
35	F2S–U7525–00	PACKING	1	1				

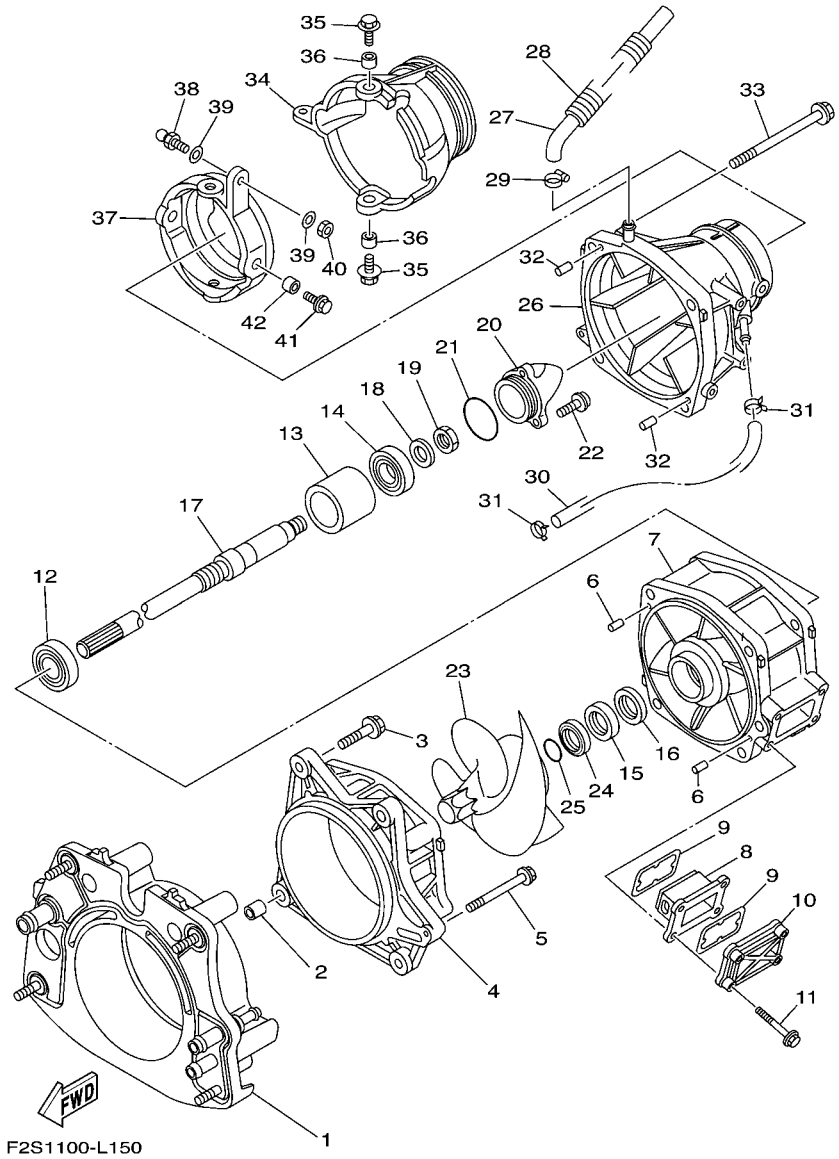

FIG. 14 JET UNIT 1

REF. NO.	PART NO.	DESCRIPTION	CAN	EUR				REMARKS
1	6CS–G5831–00	PLATE, TRANSOM	1	1				
2	99590–14016	PIN, DOWEL	2	2				
3	90119–10810	BOLT, WITH WASHER	4	4				
4	66V–51312–01–94	HOUSING, IMPELLER	1	1				
5	90119–06893	BOLT, WITH WASHER	1	1				
6	93606–12019	PIN, DOWEL	2	2				
7	6S5–51315–01	DUCT, IMPELLER	1	1				
8	6AN–G6882–00	FILTER	1	1				
9	66V–42414–00	O-RING	2	2				
10	6AN–G5214–00	COVER, WATER INLET 1	1	1				
11	90119–06897	BOLT, WITH WASHER	4	4				
12	93306–20654	BEARING	1	1				
13	6CS–G5538–00	SPACER 1	1	1				
14	93306–30537	BEARING	1	1				
15	93102–31009	OIL SEAL	1	1				
16	93101–31001	OIL SEAL	1	1				
17	6S5–45511–00	SHAFT, DRIVE	1	1				
18	9290P–20600	WASHER	1	1				
19	90170–20802	NUT	1	1				
20	6AN–R1326–00	CAP	1	1				
21	6S5–5111K–00	O-RING 1	1	1				
22	90110–06822	BOLT, HEXAGON SOCKET HEAD	3	3				
23	6BH–R1321–01	IMPELLER	1	1				
24	6BH–51348–01	SPACER	1	1				
25	93210–30611	O-RING	1	1				
26	6BH–R1318–01	NOZZLE	1	1				
27	6CS–U72M2–00	HOSE 1	1	1				

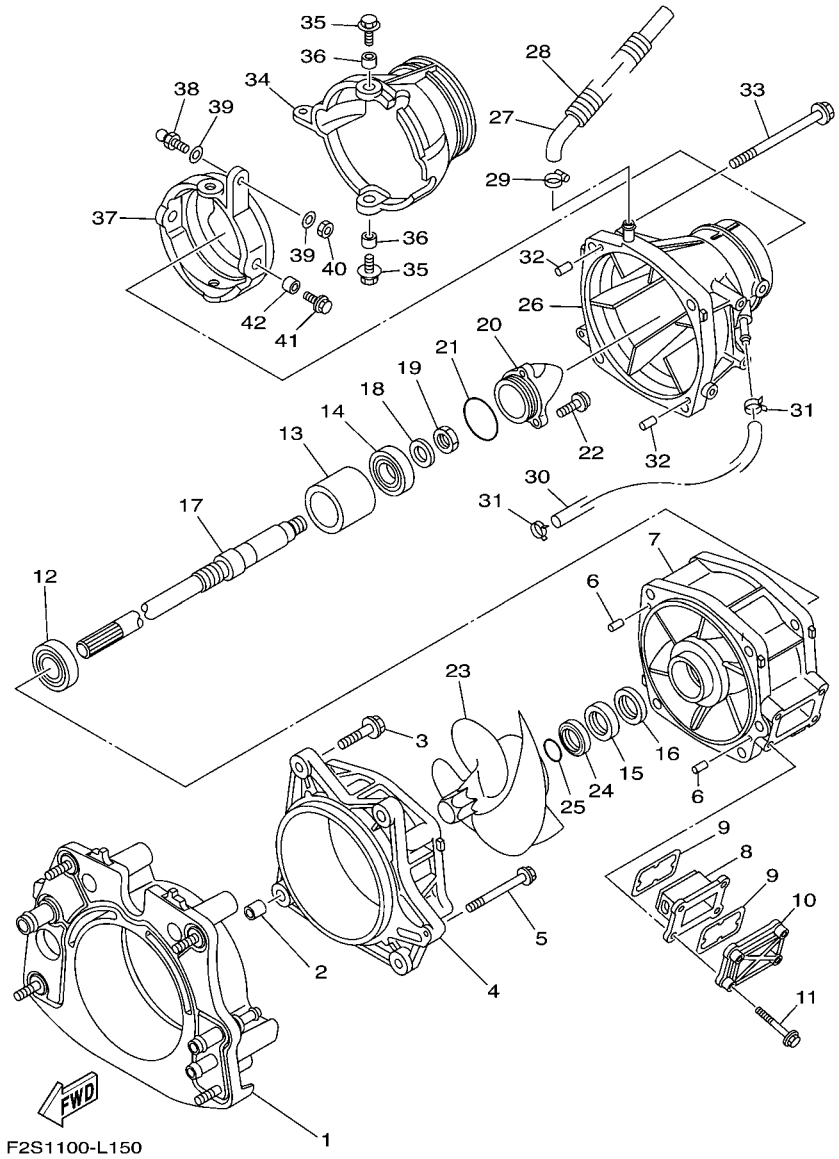

FIG. 14 JET UNIT 1

REF. NO.	PART NO.	DESCRIPTION	CAN	EUR				REMARKS
28	90447–19015	TUBE (L230)	1	1				
29	90601–118UF	BAND, HOSE 18	1	1				
30	90445–14804	HOSE (L330)	1	1				
31	90467–14803	CLIP	2	2				
32	93606–12019	PIN, DOWEL	2	2				
33	90119–10806	BOLT, WITH WASHER	4	4				
34	6S5–R1313–01	NOZZLE, DEFLECTOR	1	1				
35	90119–08851	BOLT, WITH WASHER	2	2				
36	90387–08M06	COLLAR	2	2				
37	6AN–R1190–00	RING,TRIM	1	1				
38	GH3–U146E–00	STUD, JOINT BALL	1	1				
39	90201–068M4	WASHER, PLATE	2	2				
40	9538R–06700	NUT	1	1				
41	90119–08851	BOLT, WITH WASHER	2	2				
42	90387–08M06	COLLAR	2	2				

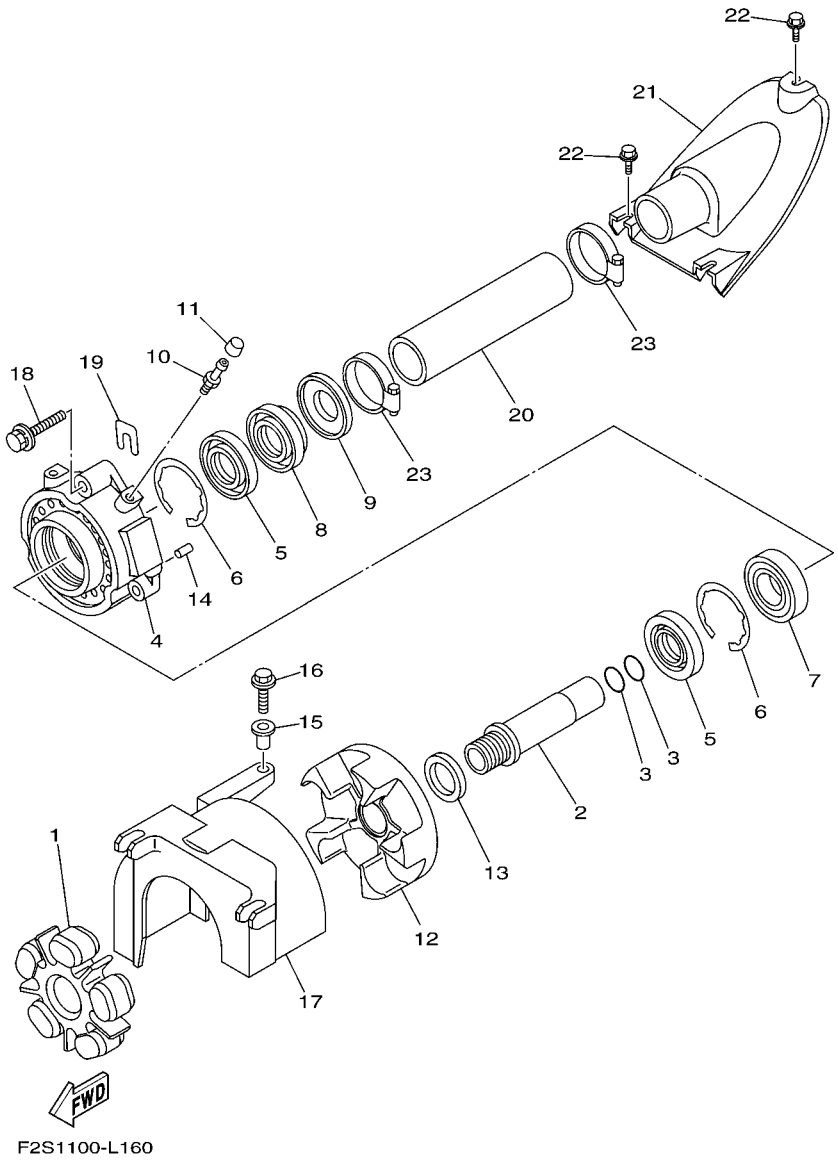

FIG. 15 JET UNIT 2

REF. NO.	PART NO.	DESCRIPTION	CAN	EUR				REMARKS
1	6BH–4581J–00	RUBBER SHAFT COUPLING	1	1				
2	6S5–51323–00	SHAFT, COUPLER	1	1				
3	93210–22MF1	O-RING	2	2				
4	6S5–45332–00–94	HOUSING, BEARING	1	1				
5	93102–29008	OIL SEAL	2	2				
6	93450–66156	CIRCLIP	2	2				
7	93306–20655	BEARING	1	1				
8	93102–29009	OIL SEAL	1	1				
9	6S5–45613–10	WASHER, THRUST	1	1				
10	93700–06M03	NIPPLE, GREASE	1	1				
11	663–45119–00	CAP, GREASE NIPPLE	1	1				
12	6S5–45593–00–94	FLANGE, COUPLING 1	1	1				
13	6S5–12289–00	WASHER	1	1				
14	93606–12019	PIN, DOWEL	2	2				
15	90387–06M60	COLLAR	1	1				
16	90119–06891	BOLT, WITH WASHER	1	1				
17	6S5–R1381–01	COVER	1	1				
18	90119–089UU	BOLT, WITH WASHER	3	3				
19	GD0–U7249–00–05	SHIM (T=0.5)	2	2				UN
20	F2S–U883B–00	PIPE, 1	1	1				
21	F2S–U883E–00	JOINT, PIPE	1	1				
22	90109–06832	BOLT	3	3				
23	90601–152U3	BAND, HOSE 52	2	2				

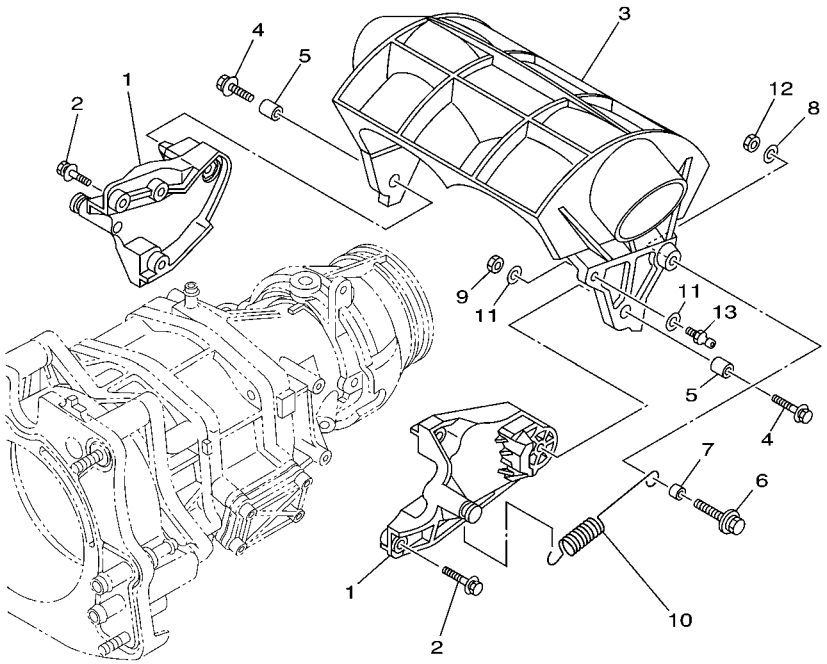

FIG. 16 JET UNIT 3

REF. NO.	PART NO.	DESCRIPTION	CAN	EUR				REMARKS
1	6CS–R1341–00	BRACKET 1	2	2				
2	90119–06891	BOLT, WITH WASHER	6	6				
3	6S5–R1314–02	GATE, REVERSE	1	1				
4	90119–08840	BOLT, WITH WASHER	2	2				
5	90387–08M30	COLLAR	2	2				
6	90119–069UX	BOLT, WITH WASHER	1	1				
7	90387–06M30	COLLAR	1	1				
8	90201–06801	WASHER, PLATE	1	1				
9	9538R–06600	NUT	1	1				
10	6S5–52358–00	SPRING, RETAINER	1	1				
11	90201–06801	WASHER, PLATE	2	2				
12	9538R–06600	NUT	1	1				
13	EU0–U1461–02	STUD, JOINT BALL	1	1				

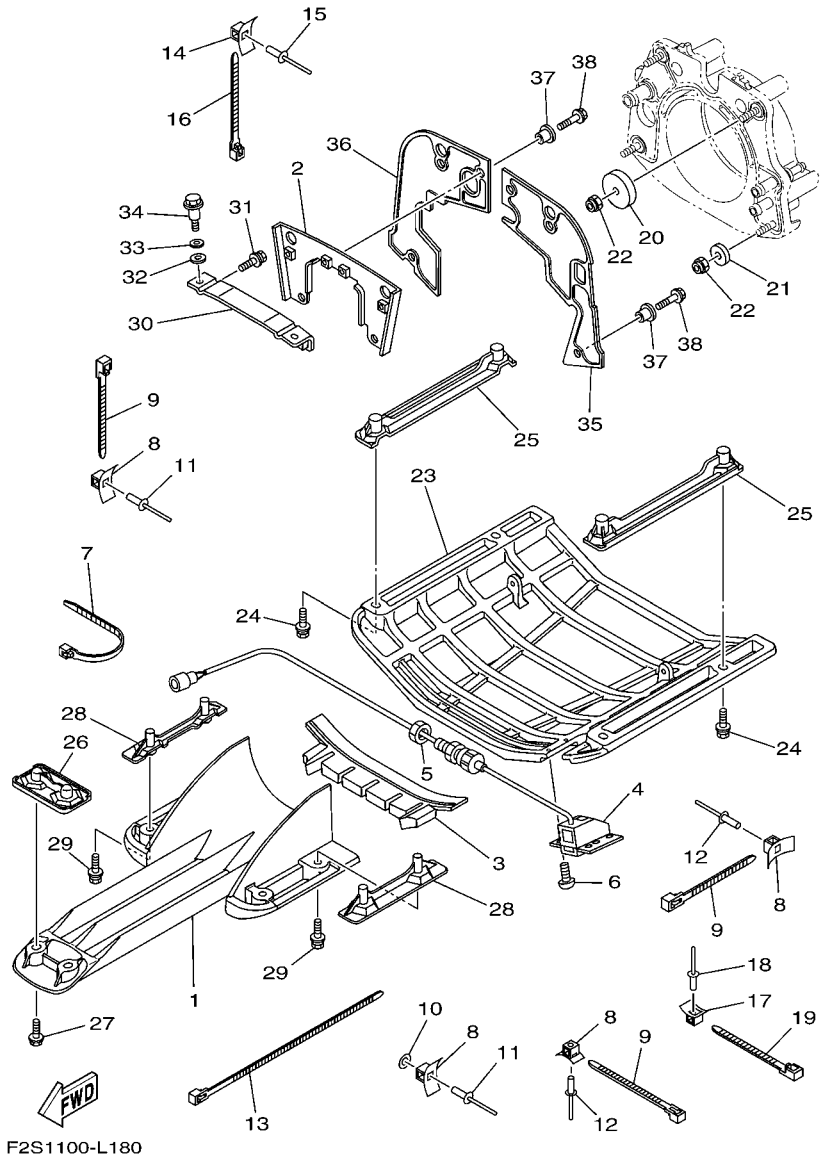

FIG. 17 JET UNIT 4

REF. NO.	PART NO.	DESCRIPTION	CAN	EUR				REMARKS
1	6CS–R1333–00	SCREEN, INTAKE	1	1				
2	6AN–R1341–01	BRACKET 1	1	1				
3	F2S–U72C0–01	SPACER	1	1				
4	F1S–U8K31–02	SENSOR SPEED	1	1				
5	F2C–U151S–00	NUT	1	1				
6	90150–05807	SCREW, ROUND HEAD	4	4				
7	90464–32801	CLAMP	1	1				
8	F1W–U828M–00	BASE, CLAMP	8	8				
9	90464–32801	CLAMP	7	7				
10	9299R–05200	WASHER	1	1				
11	90267–489U6	RIVET, BLIND	5	5				
12	90267–489U6	RIVET, BLIND	3	3				
13	90464–99801	CLAMP	1	1				
14	F1W–U828M–00	BASE, CLAMP	1	1				
15	90267–489U6	RIVET, BLIND	1	1				
16	90464–32801	CLAMP	1	1				
17	F1W–U828M–00	BASE, CLAMP	1	1				
18	90267–489U6	RIVET, BLIND	1	1				
19	90464–32801	CLAMP	1	1				
20	F1S–U725E–01	WASHER	2	2				
21	90201–10801	WASHER, PLATE	2	2				
22	9572R–10300	NUT, NYLON	4	4				
23	F2S–6273B–00	PLATE 2	1	1				
24	90119–08823	BOLT, WITH WASHER	4	4				
25	F1B–U8572–01	BRACKET 2	2	2				
26	F2S–U8577–00	BRACKET, 3	1	1				
27	90119–08823	BOLT, WITH WASHER	2	2				

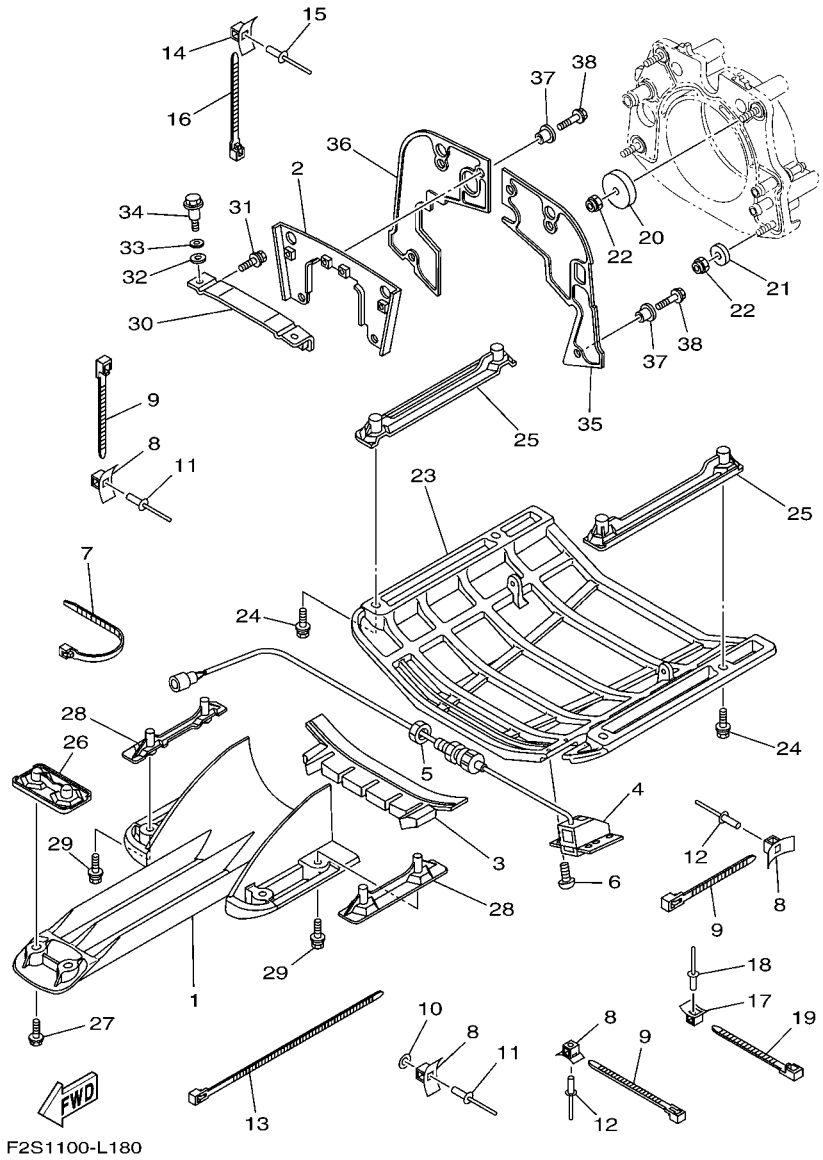

FIG. 17 JET UNIT 4

REF. NO.	PART NO.	DESCRIPTION	CAN	EUR				REMARKS
28	F1G–U8571–02	BRACKET 1	2	2				
29	90119–08823	BOLT, WITH WASHER	4	4				
30	F2C–U7557–01	BRACKET	1	1				
31	90119–089U7	BOLT, WITH WASHER	2	2				
32	90430–12002	GASKET	2	2				
33	92990–12200	WASHER, PLAIN	2	2				
34	90109–08041	BOLT	2	2				
35	F2S–U757E–02	PLATE, RUBBER 1	1	1				
36	F2S–U757F–01	PLATE, RUBBER 2	1	1				
37	90387–06080	COLLAR	6	6				
38	90119–06827	BOLT, WITH WASHER	6	6				

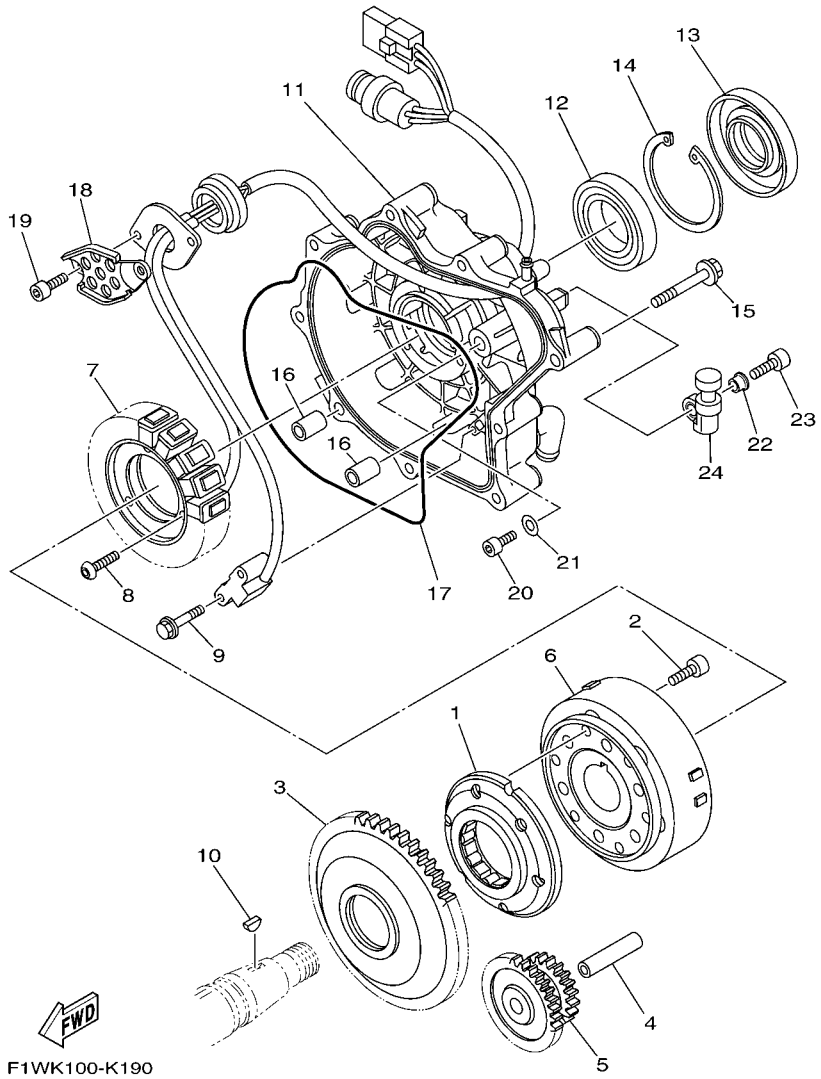

FIG. 18 GENERATOR

REF. NO.	PART NO.	DESCRIPTION	CAN	EUR				REMARKS
1	6S5–15590–00	STARTER ONE-WAY ASSY	1	1				
2	90110–08212	BOLT, HEXAGON SOCKET HEAD	6	6				
3	6S5–15515–00	GEAR 3	1	1				
4	6S5–15521–00	SHAFT 1	1	1				
5	6S5–15517–00	GEAR, IDLER 2	1	1				
6	6S5–81450–01	ROTOR ASSY	1	1				
7	6S5–81410–10	STATOR ASSY	1	1				
8	90149–06229	SCREW	3	3				
9	97513–05514	BOLT, WITH WASHER	2	2				
10	90280–03047	KEY, WOODRUFF	1	1				
11	6S5–81337–20	COVER, FLYWHEEL	1	1				
12	93306–00805	BEARING	1	1				
13	6S5–81167–10	OIL SEAL	1	1				
14	99009–72500	CIRCLIP	1	1				
15	90105–08249	BOLT, FLANGE	9	9				
16	99530–10114	PIN, DOWEL	2	2				
17	6S5–81168–00	O-RING	1	1				
18	6S5–81328–00	CLAMP	1	1				
19	91317–06014	BOLT	2	2				
20	91317–05010	BOLT	1	1				
21	90201–052E8	WASHER, PLATE	1	1				
22	90387–06M05	COLLAR	2	2				
23	91380–06020	BOLT	2	2				
24	6S5–81364–10	GROMMET	2	2				

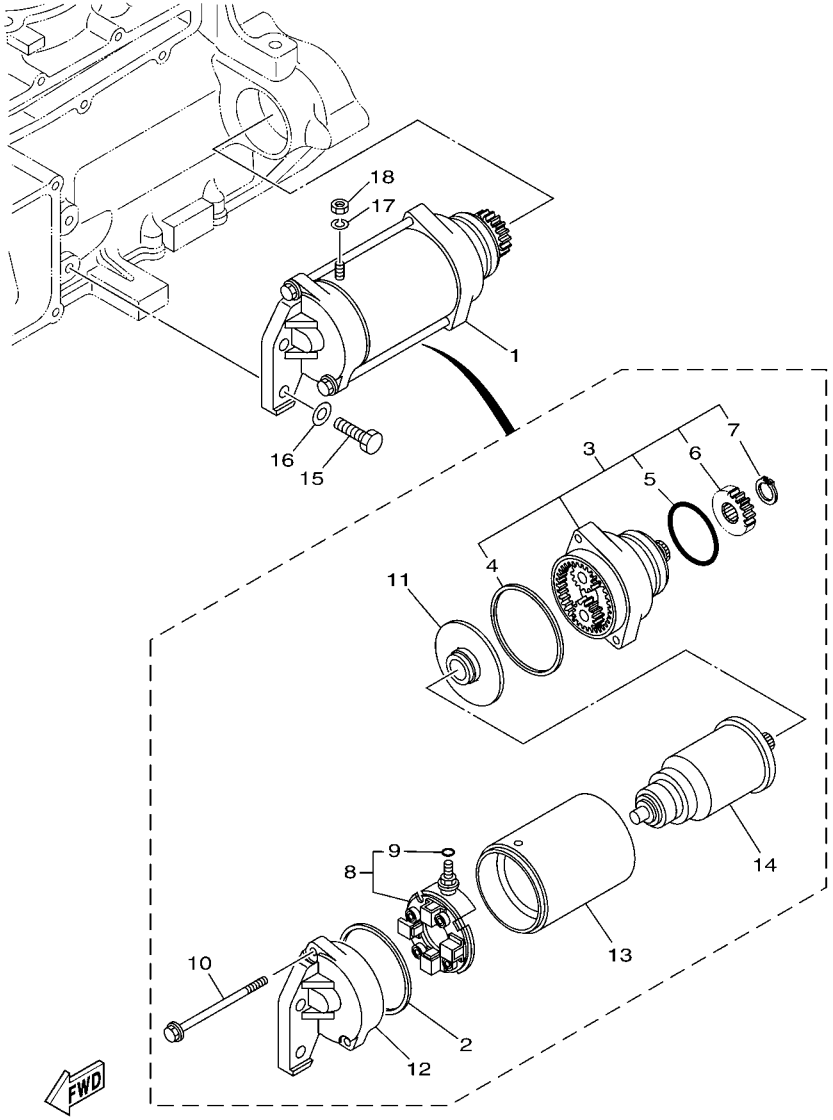

F1W1100-G200

FIG. 19 STARTING MOTOR

REF. NO.	PART NO.	DESCRIPTION	CAN	EUR				REMARKS
1	6S5–81800–00	STARTING MOTOR ASSY	1	1				
2	11H–81844–00	.GASKET	1	1				
3	6S5–81830–00	.FRONT BRACKET ASSY	1	1				
4	4G0–81844–00	..GASKET	1	1				
5	1J7–81847–60	..O-RING	1	1				
6	5EL–15511–00	..GEAR, STARTING MOTOR	1	1				
7	93410–12003	..CIRCLIP	1	1				
8	6S5–81840–00	.BRUSH HOLDER ASSY	1	1				
9	3TB–81847–00	..O-RING	1	1				
10	6S5–81826–00	.BOLT	2	2				
11	5EL–81845–00	.PLATE	1	1				
12	6S5–81820–00	.REAR BRACKET ASSY	1	1				
13	6S5–81810–00	.STATOR ASSY	1	1				
14	5A8–81850–10	.ARMATURE ASSY	1	1				
15	97013–08030	BOLT	2	2				
16	92903–08600	WASHER, PLATE	2	2				
17	92990–06100	WASHER, SPRING	1	1				
18	95380–06700	NUT	1	1				

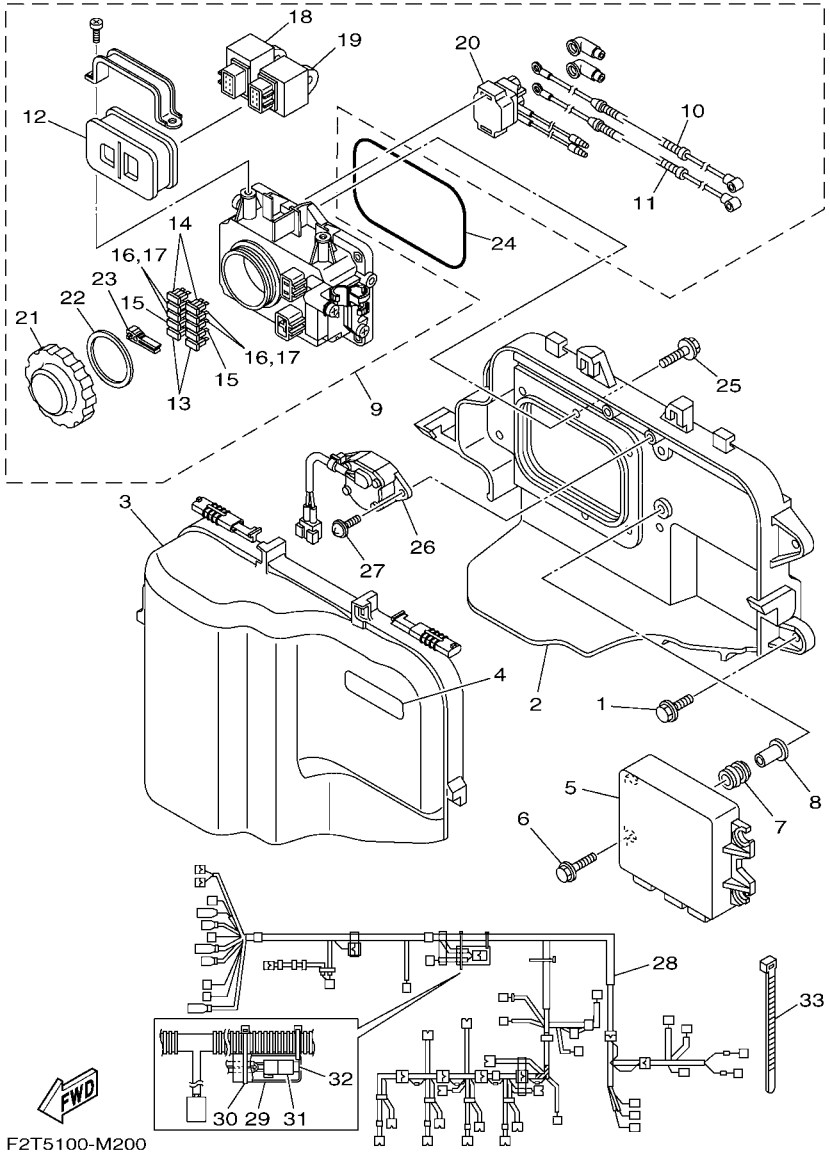

FIG. 20 ELECTRICAL 1

REF. NO.	PART NO.	DESCRIPTION	CAN	EUR				REMARKS
1	90119–089UT	BOLT, WITH WASHER	4	4				
2	6BH–81845–00	PLATE	1	1				
3	6S5–81942–10	COVER	1	1				
4	60E–83627–00	LABEL, CAUTION 7	1	1				
5	6CR–8591A–10	ENGINE CONTROL UNIT ASSY	1	1				
6	90119–06M35	BOLT, WITH WASHER	4	4				
7	6A0–82317–00	DAMPER, IGNITION COIL	4	4				
8	90387–06119	COLLAR	4	4				
9	6BH–82170–00	FUSE BOX ASSY	1	1				
10	6S5–82115–00	.WIRE, PLUS LEAD	1	1				
11	6S5–82117–00	.WIRE, LEAD	1	1				
12	6D3–82157–00	.DAMPER	1	1				
13	67F–82151–00	.FUSE (20A)	2	2				
14	67F–82151–10	.FUSE (30A)	2	2				
15	67F–82151–30	.FUSE (3A)	2	2				
16	67F–82151–40	.FUSE (10A)	2	2				
17	67F–82151–40	.FUSE (10A)	2	2				
18	60E–81950–00	.RELAY ASSY	1	1				
19	68V–81950–00	.RELAY ASSY	1	1				
20	6B6–81940–00	.STARTER RELAY ASSY	1	1				
21	66V–8132W–00	.CAP	1	1				
22	66V–81844–00	.GASKET	1	1				
23	67F–2812A–00	.PULLER, FUSE	1	1				
24	6BH–81847–00	O-RING	1	1				
25	90119–06091	BOLT, WITH WASHER	6	6				
26	6S5–8259E–00	SWITCH ASSY	1	1				
27	97780–60520	SCREW, TAPPING	2	2				

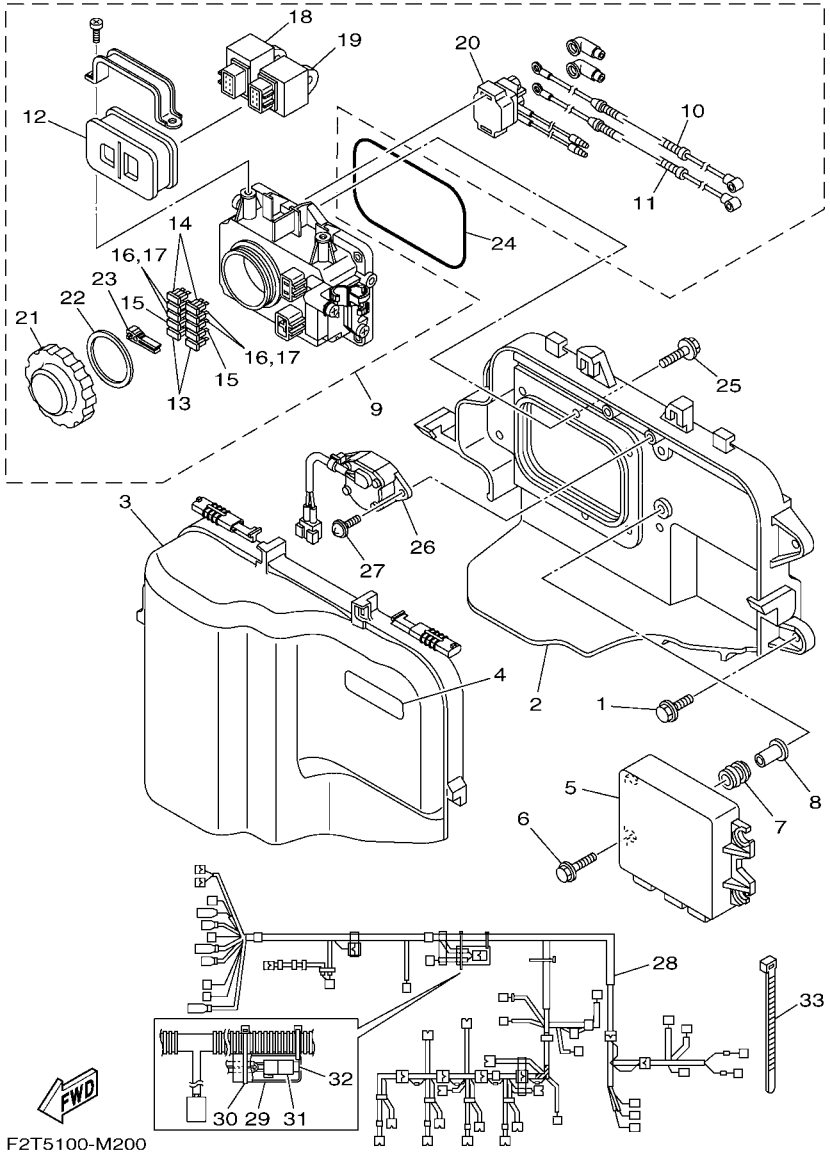

FIG. 20 ELECTRICAL 1

REF. NO.	PART NO.	DESCRIPTION	CAN	EUR				REMARKS
28	6CR–8259L–10	WIRE HARNESS ASSY 1	1	1				
29	4B5–82599–00	.COVER, CONNECTER	1	1				
30	90465–13M18	.CLAMP	1	1				
31	67F–82151–30	.FUSE (3A)	2	2				
32	67F–8215B–00	.CAP (BLACK)	1	1				
33	90465–14M66	CLAMP	2	2				

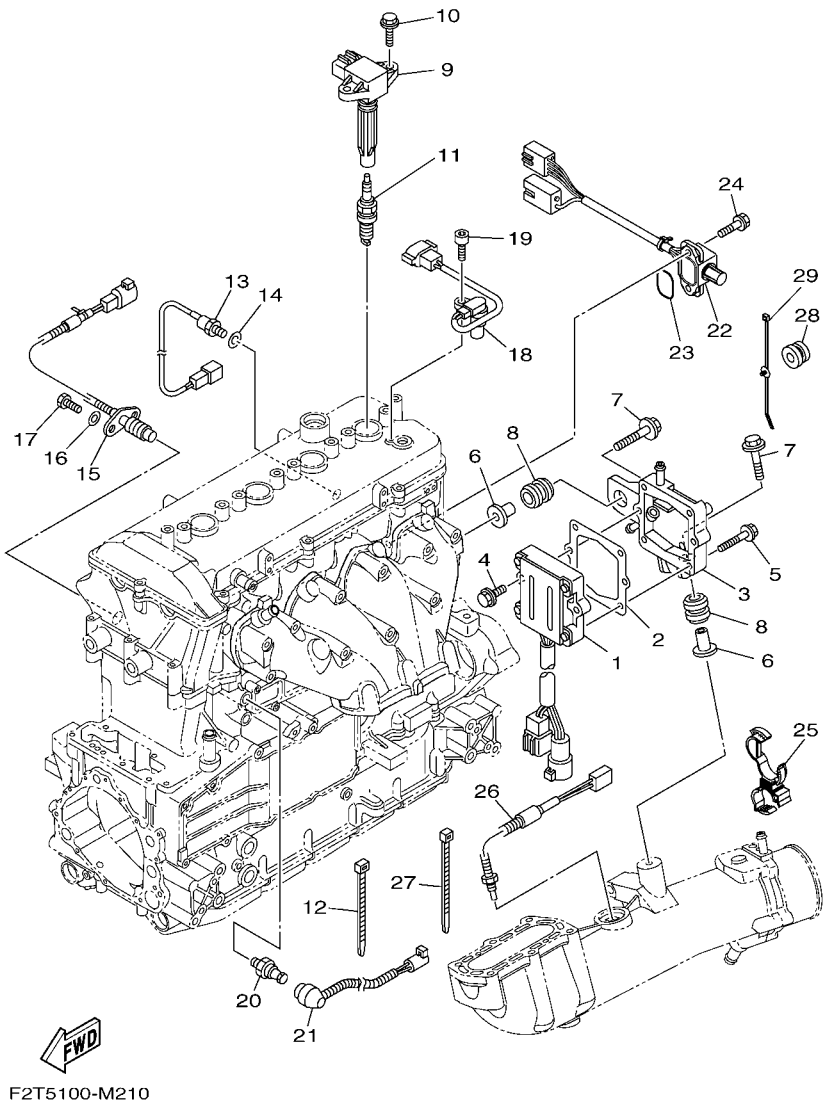

FIG. 21 ELECTRICAL 2

REF. NO.	PART NO.	DESCRIPTION	CAN	EUR				REMARKS
1	6S5–81960–10	RECTIFIER & REGULATOR ASSY	1	1				
2	6S5–81975–00	PLATE, RECTIFIER FITTING	1	1				
3	6S5–81972–01–94	COVER, RECTIFIER	1	1				
4	90119–06MA3	BOLT, WITH WASHER	2	2				
5	90119–06048	BOLT, WITH WASHER	4	4				
6	6D3–14495–00	COLLAR	2	2				
7	90119–08M22	BOLT, WITH WASHER	2	2				
8	90480–22M15	GROMMET	2	2				
9	6S5–82310–00	IGNITION COIL ASSY	4	4				
10	90105–06903	BOLT, FLANGE	8	8				
11	94702–00427	PLUG, SPARK (NGK LFR6A)	4	4				
12	90465–13M18	CLAMP	7	7				
13	61A–85790–00	THERMOSENSOR ASSY	1	1				
14	92990–10600	WASHER, PLATE	1	1				
15	6CR–82560–00	THERMO SWITCH ASSY	1	1				
16	97095–06016	BOLT	2	2				
17	92995–06600	WASHER	2	2				
18	60E–85896–00	SENSOR, CAM POSITION	1	1				
19	91380–06016	BOLT	1	1				
20	68V–82504–00	OIL PRESSURE SWITCH ASSY	1	1				
21	6S5–81315–00	LEAD WIRE ASSY	1	1				
22	6CS–8273J–00	EARTH PLATE COMP.	1	1				
23	93210–32172	O-RING	1	1				
24	90119–06MA3	BOLT, WITH WASHER	2	2				
25	90464–20008	CLAMP	1	1				
26	6AA–85790–00	THERMOSENSOR ASSY	1	1				
27	90464–31001	CLAMP	1	1				

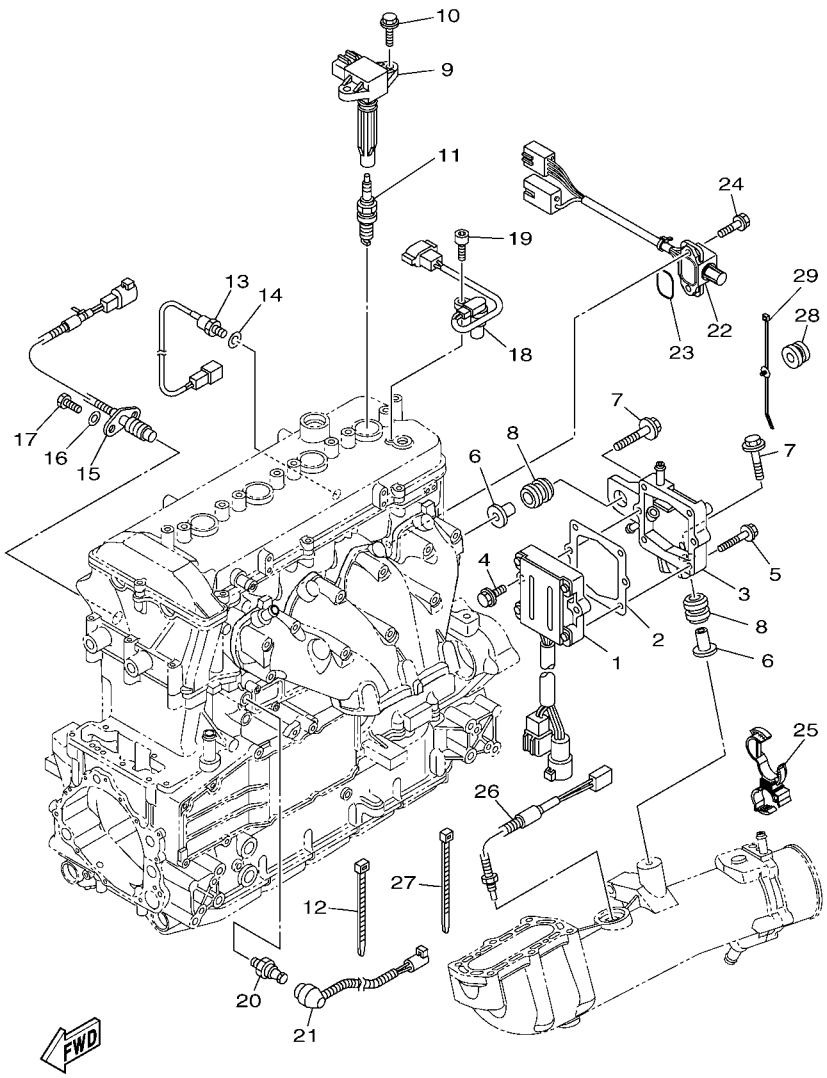

FIG. 21 ELECTRICAL 2

REF. NO.	PART NO.	DESCRIPTION	CAN	EUR				REMARKS
28	90464–31002	CLAMP	1	1				
29	90480–20132	GROMMET	1	1				

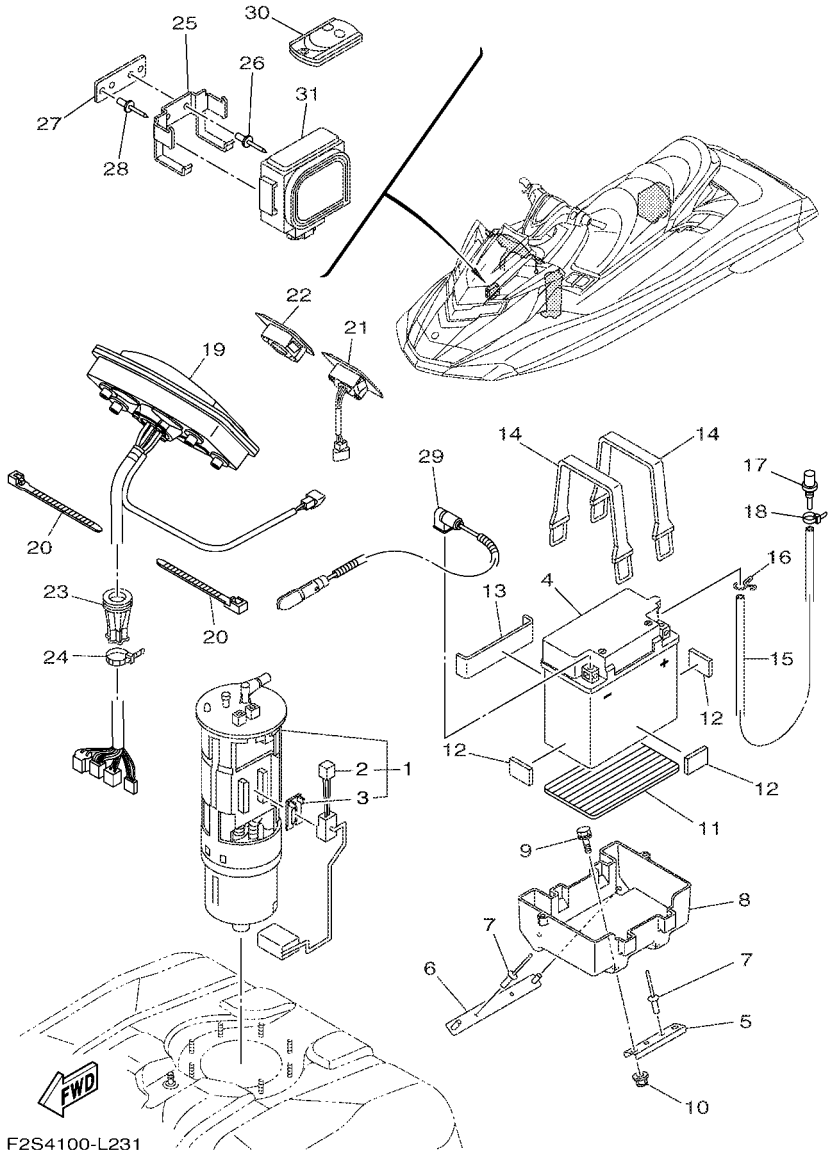

FIG. 22 ELECTRICAL 3

REF. NO.	PART NO.	DESCRIPTION	CAN	EUR				REMARKS
1	6S5–13907–00	FUEL PUMP COMP.	1	1				
2	6S5–682E0–00	.FUEL SENDER ASSY	1	1				
3	60E–82556–00	.DAMPER, STOPPER	1	1				
4	EU0–U8217–H2	BATTERY (YB16CL-B)	1	1				
5	F2S–U8592–00	PLATE, BASE 2	1	1				
6	F2S–U8593–00	PLATE, BASE 3	1	1				
7	90267–489U1	RIVET,BLIND	4	4				
8	F2S–U8211–00	CASE, BATTERY	1	1				
9	90119–06832	BOLT, WITH WASHER	2	2				
10	F2N–U142L–00	NUT, LOCK	2	2				
11	F1S–U8221–00	PAD, BATTERY	1	1				
12	EU0–U8221–30	PAD, BATTERY 2	3	3				
13	F1K–U8221–00	PAD, BATTERY	1	1				
14	EU0–U821D–00	BAND,BATTERY 1	2	2				
15	F0D–U785G–10	HOSE, AIR VENT	1	1				
16	90467–089U1	CLIP	1	1				
17	GJ3–6215F–00	NIPPLE	1	1				
18	90465–11829	CLAMP	1	1				
19	F2S–6820A–10	METER ASSY	1	1				
20	90464–32801	CLAMP	2	2				
21	F2S–68090–00	SWITCH ASSY.	1	1				
22	F2T–68322–00	PANEL	1	1				
23	F1X–U822E–00	GROMMET	1	1				
24	90464–32801	CLAMP	1	1				
25	F1W–U826C–00	BRACKET	1	1				
26	90267–489U1	RIVET,BLIND	2	2				
27	F1W–U8376–00	PLATE	1	1				

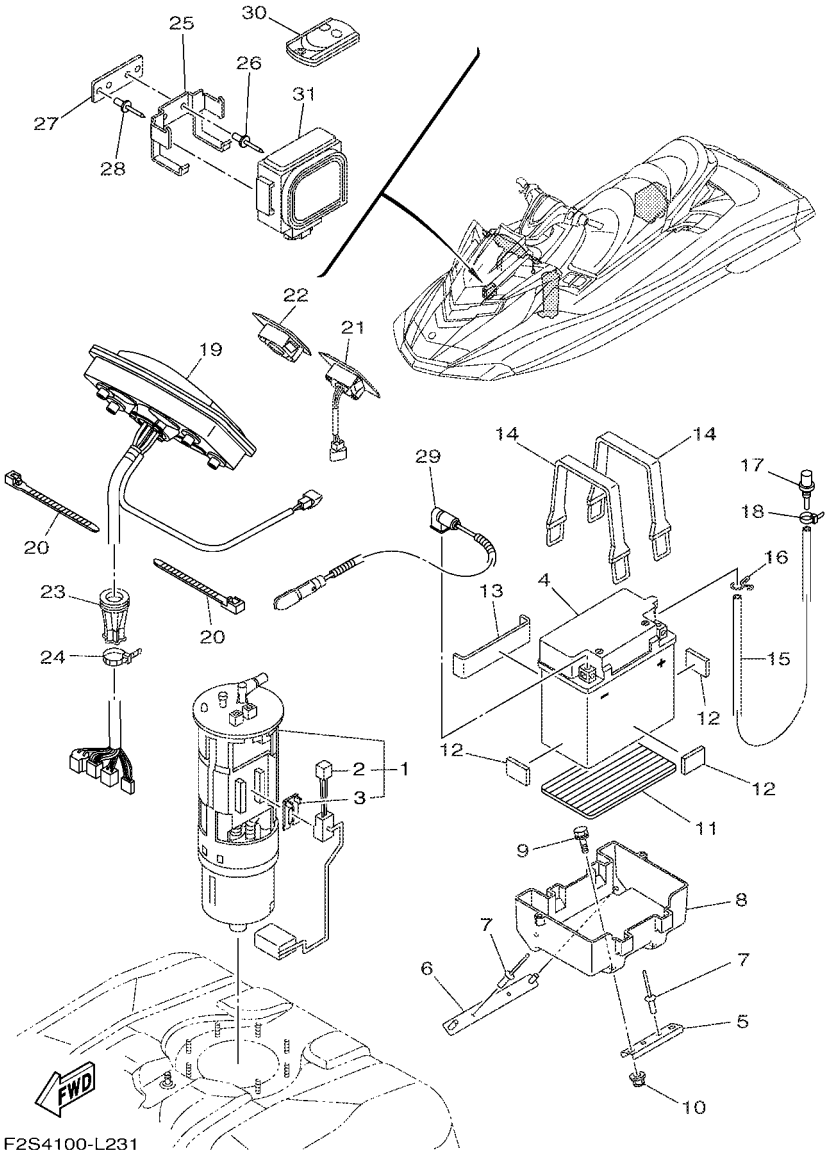

FIG. 22 ELECTRICAL 3

REF. NO.	PART NO.	DESCRIPTION	CAN	EUR				REMARKS
28	90267–489U1	RIVET,BLIND	2	2				
29	6S5–82116–00	WIRE, MINUS LEAD	1	1				
30	6B6–86261–00	TRANSMITTER COMP	1					FOR CAN
	6B6–86261–10	TRANSMITTER COMP		2				FOR EUR
31	6B6–86265–00	RECIVER COMP	1					FOR CAN
	6B6–86265–10	RECIVER COMP		1				FOR EUR

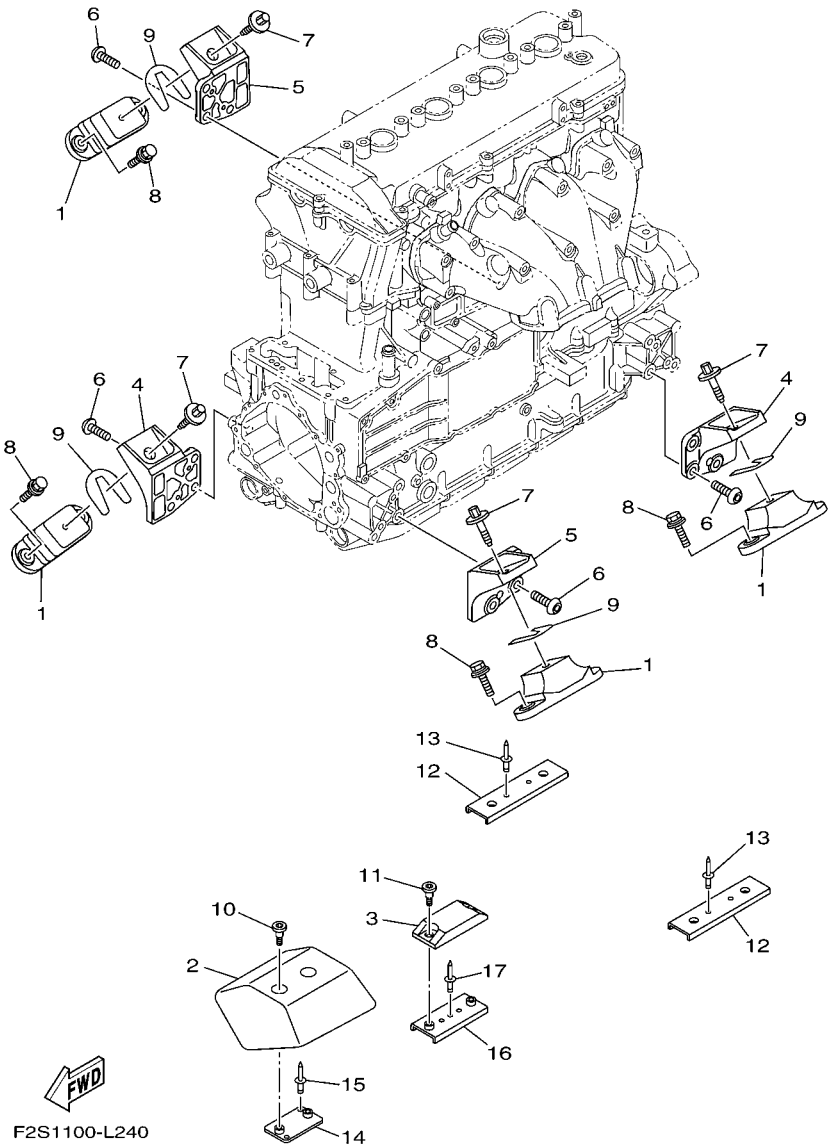

FIG. 23 ENGINE MOUNT

REF. NO.	PART NO.	DESCRIPTION	CAN	EUR				REMARKS
1	67X–44517–10	MOUNT RUBBER	4	4				
2	6BH–G4532–00	STOPPER, UPPER MOUNT	1	1				
3	6BH–G4574–00	STOPPER, LOWER MOUNT RUBBER	1	1				
4	6BH–41661–00–94	BRACKET 1	2	2				
5	6BH–41662–00–94	BRACKET 2	2	2				
6	90149–10052	SCREW	12	12				
7	90119–08859	BOLT, WITH WASHER	4	4				
8	F2S–U1355–00	BOLT	8	8				
9	EU0–U7354–00–01	SHIM (T=0.1)	10	10				UN
	EU0–U7354–00–03	SHIM (T=0.3)	10	10				UN
	EU0–U7354–00–05	SHIM (T=0.5)	10	10				UN
	EU0–U7354–00–10	SHIM (T=1.0)	10	10				UN
	EU0–U7354–00–20	SHIM (T=2.0)	10	10				UN
10	90109–06874	BOLT	2	2				
11	90109–06875	BOLT	2	2				
12	F2S–U732B–00	PLATE	2	2				
13	90267–489U2	RIVET, BLIND	4	4				
14	F2S–U732B–10	PLATE	1	1				
15	90267–489U2	RIVET, BLIND	2	2				
16	F2M–U732B–00	PLATE	1	1				
17	90267–489U2	RIVET, BLIND	1	1				

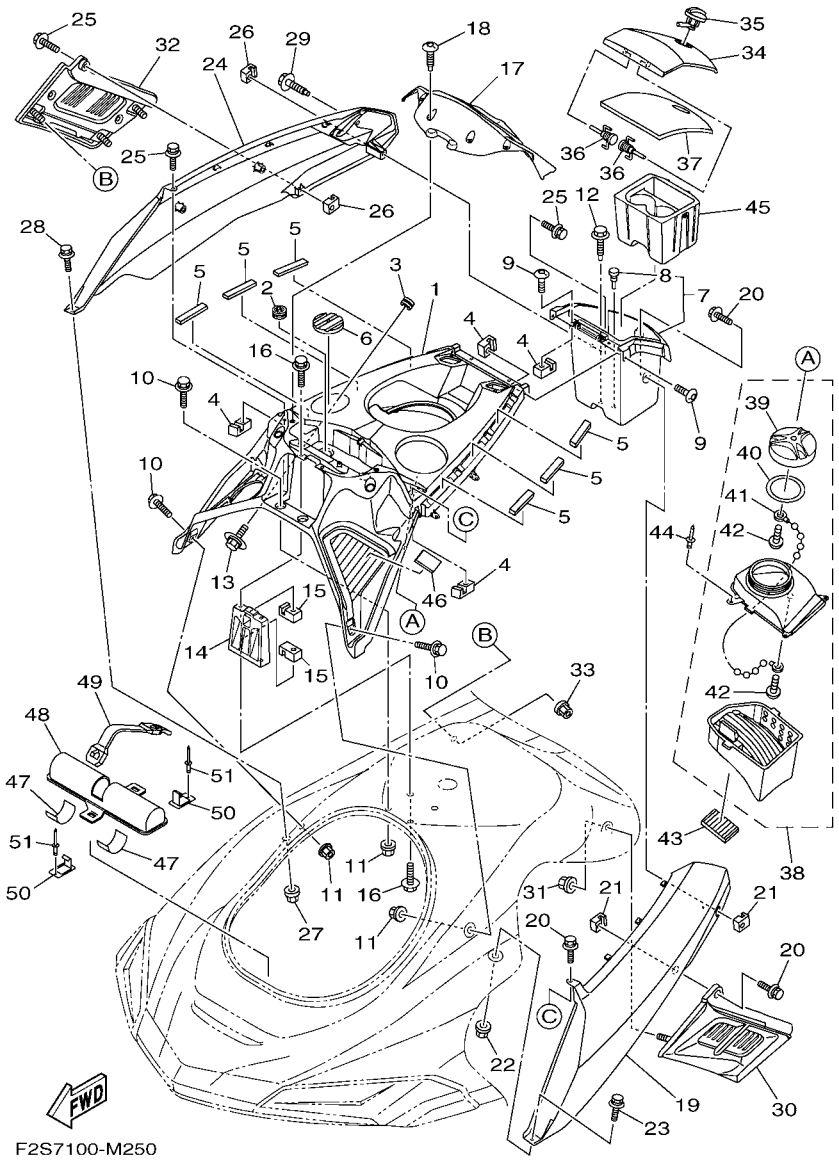

FIG. 24 ENGINE HATCH 1

REF. NO.	PART NO.	DESCRIPTION	CAN	EUR				REMARKS
1	F2S–U5554–02	COVER, CENTER	1	1				
2	F1X–U828E–01	DAMPER 1	2	2				
3	90480–19800	GROMMET	4	4				
4	F1X–U517E–01	NUT	6	6				
5	F0X–U515E–01	DAMPER 2	6	6				
6	F2S–U3844–00	MAT	1	1				
7	F2S–U1708–02	GLOVE BOX HATCH ASSY.	1	1				
8	90605–502U2	.PLUG	1	1				
9	F2N–67823–10	SCREW	4	4				
10	90119–06880	BOLT, WITH WASHER	4	4				
11	F2N–U142L–00	NUT, LOCK	4	4				
12	90119–06858	BOLT, WITH WASHER	2	2				
13	90119–05803	BOLT, WITH WASHER	4	4				
14	F2S–U517F–00	HOOK,LID LOCK	1	1				
15	F1X–U517E–01	NUT	4	4				
16	90119–06880	BOLT, WITH WASHER	4	4				
17	F2S–U8262–01–P0	COVER METER (BMG)	1	1				
18	F2S–U13C1–00	SCREW	4	4				
19	F2S–U377B–02–P2	COVER,SIDE 1 (DRMR)	1	1				
20	90119–06880	BOLT, WITH WASHER	3	3				
21	F1X–U517E–01	NUT	2	2				
22	F2N–U142L–00	NUT, LOCK	1	1				
23	90119–06880	BOLT, WITH WASHER	1	1				
24	F2S–U377C–02–P2	COVER,SIDE 2 (DRMR)	1	1				
25	90119–06880	BOLT, WITH WASHER	3	3				
26	F1X–U517E–01	NUT	2	2				
27	F2N–U142L–00	NUT, LOCK	1	1				

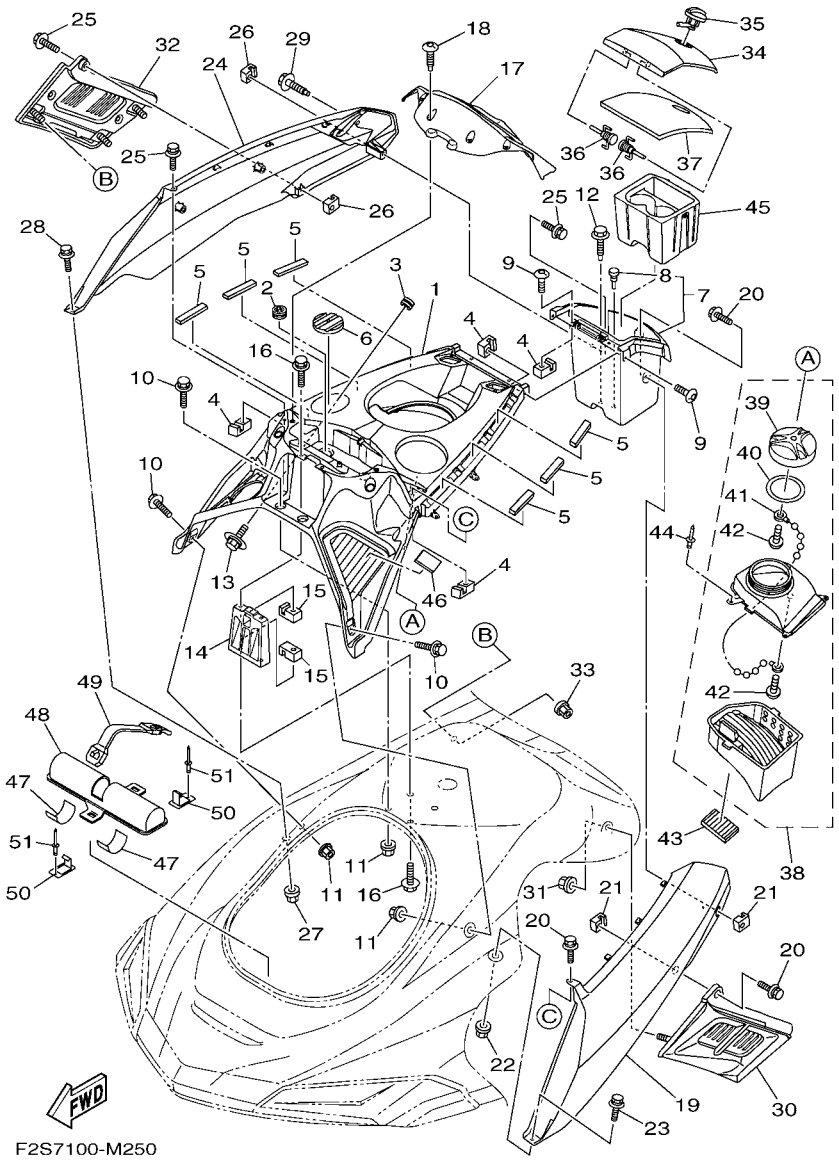

FIG. 24 ENGINE HATCH 1

REF. NO.	PART NO.	DESCRIPTION	CAN	EUR				REMARKS
28	90119–06880	BOLT, WITH WASHER	1	1				
29	90119–06858	BOLT, WITH WASHER	1	1				
30	F2S–U370J–00	SIDE ORNAMENT ASSY 1	1	1				
31	F2N–U142L–00	NUT, LOCK	3	3				
32	F2S–U370K–00	SIDE ORNAMENT ASSY 2	1	1				
33	F2N–U142L–00	NUT, LOCK	3	3				
34	F2S–U517H–00	LID HATCH	1	1				
35	F1X–62875–00	LOCK	1	1				
36	F1B–6517R–00	PIN, HINGE	2	2				
37	F2S–U519D–00	PACKING CASE	1	1				
38	F2S–U591A–00	CASE,ASSY 1	1	1				
39	F1W–U591C–01	.CAP,CASE	1	1				
40	F1W–U591D–00	.PACKING,CASE	1	1				
41	F2S–U7835–01	.CHAIN BALL	1	1				
42	F2S–U316C–00	.SCREW (FL66314300)	2	2				
43	F1K–U759C–00	MAT 2	1	1				
44	90267–48807	RIVET, BLIND	3	3				
45	F2S–U5633–00	HOLDER, DRINK	1	1				
46	GJ1–U759C–00	MAT 2	1	1				
47	F1K–U759C–00	MAT 2	2	2				
48	F1K–U5983–01	BOX, FIRE EXTINGUISHER	1	1				
49	F2P–U828K–00	BAND 1	1	1				
50	F1K–U5772–04	HOOK A	2	2				
51	90267–489U1	RIVET,BLIND	2	2				

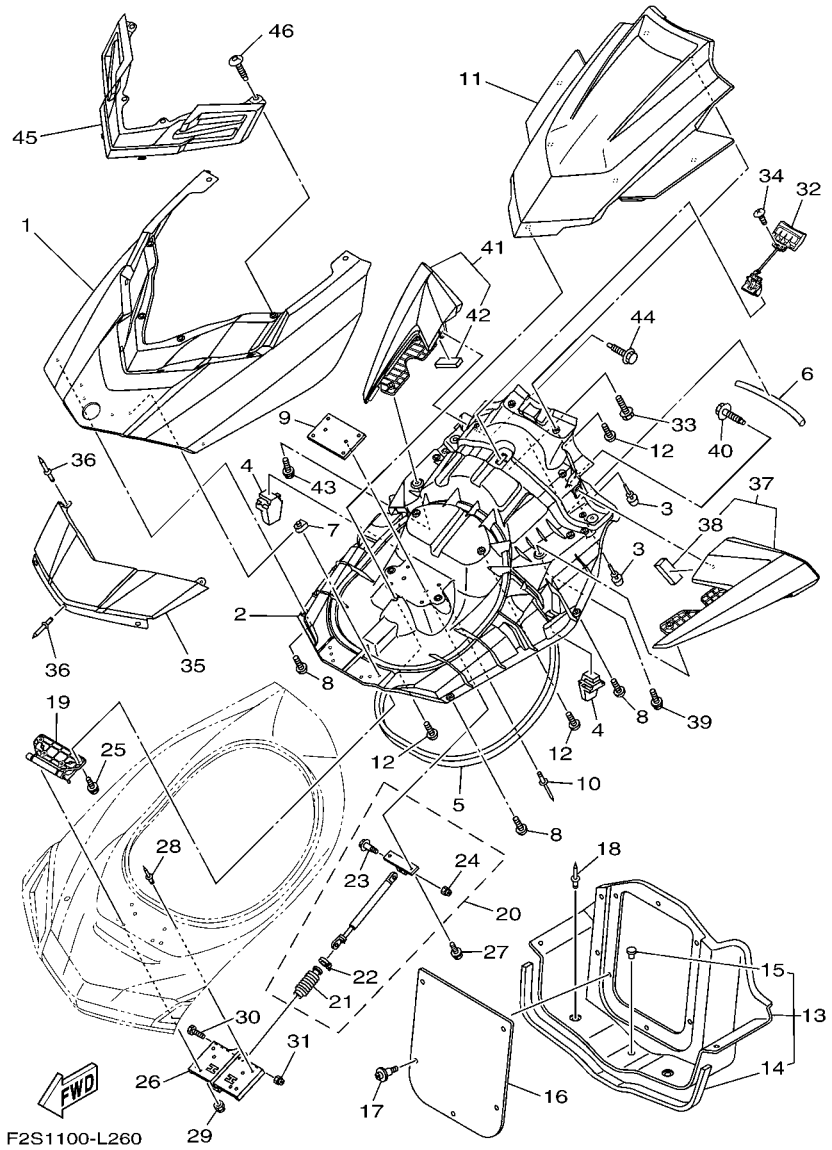

FIG. 25 ENGINE HATCH 2

REF. NO.	PART NO.	DESCRIPTION	CAN	EUR				REMARKS
1	F2S–U517B–01–P2	LID, ENGINE ROOM (DRMR)	1	1				
2	F2S–U519G–02	INNER, ENGINE HATCH	1	1				
3	F1W–U3768–01	CUSHION, RUBBER	4	4				
4	F2S–U5135–00	STOPPER, HATCH 1	2	2				
5	F2S–U2663–00	PACKING 1	1	1				
6	F2S–U266B–00	PACKING 3	1	1				
7	90183–06902	NUT, SPRING	4	4				
8	F2S–U13C1–00	SCREW	8	8				
9	F1W–U5148–00	PLATE, HATCH	1	1				
10	90267–48807	RIVET, BLIND	4	4				
11	F2S–U515N–01–P2	VISOR (DRMR)	1	1				
12	F2S–U13C1–00	SCREW	7	7				
13	F2S–U475B–00	LOCKER,BOW	1	1				
14	F2N–U266C–01	.PACKING 4	1	1				
15	90605–502U1	.PLUG, BLIND	1	1				
16	F2S–U475F–00	PLATE, LOKER BOW	1	1				
17	90269–08801	RIVET	5	5				
18	90269–08801	RIVET	4	4				
19	F2S–U517D–00	HINGE, LID	1	1				
20	F2S–6514S–00	DAMPER ASSY	1	1				
21	F1W–6514T–00	.COVER, DAMPER	1	1				
22	1UA–82591–00	.BAND	1	1				
23	90109–06218	.BOLT	1	1				
24	95720–06300	.NUT, SELF-LOCKING	1	1				
25	90119–06895	BOLT, WITH WASHER	4	4				
26	F2S–U518E–00	PLATE, HINGE LID	1	1				
27	90119–069UH	BOLT, WITH WASHER	2	2				

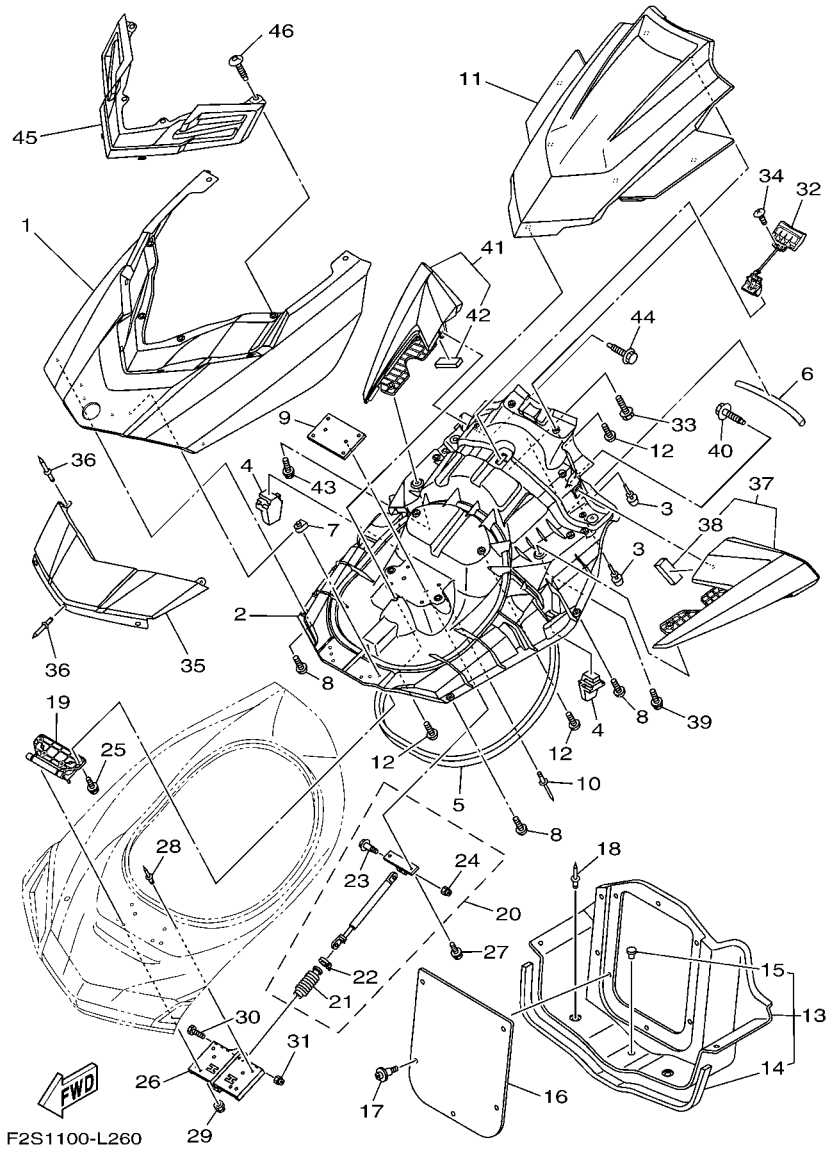

FIG. 25 ENGINE HATCH 2

REF. NO.	PART NO.	DESCRIPTION	CAN	EUR				REMARKS
28	90267–48020	RIVET, BLIND	2	2				
29	9572R–06300	NUT, NYLON	4	4				
30	90109–06218	BOLT	1	1				
31	9572R–06300	NUT, NYLON	1	1				
32	F2S–U517C–01	LOCK, LID	1	1				
33	90119–059U4	BOLT, WITH WASHER	2	2				
34	9778R–50010	SCREW, TAPPING	2	2				
35	F2S–U513M–01–P2	COVER, FRONT (DRMR)	1	1				
36	90267–489U6	RIVET, BLIND	5	5				
37	F2S–U590D–31	MIRROR ASSY. 1	1	1				
38	F1K–U266B–00	.PACKING 3	1	1				
39	90119–089UL	BOLT, WITH WASHER	2	2				
40	90119–06858	BOLT, WITH WASHER	1	1				
41	F2S–U590E–31	MIRROR ASSY. 2	1	1				
42	F1K–U266B–00	.PACKING 3	1	1				
43	90119–089UL	BOLT, WITH WASHER	2	2				
44	90119–06858	BOLT, WITH WASHER	1	1				
45	F2S–U510D–01	CENTER ORNAMENT ASSY	1	1				
46	F2S–U13C1–00	SCREW	4	4				

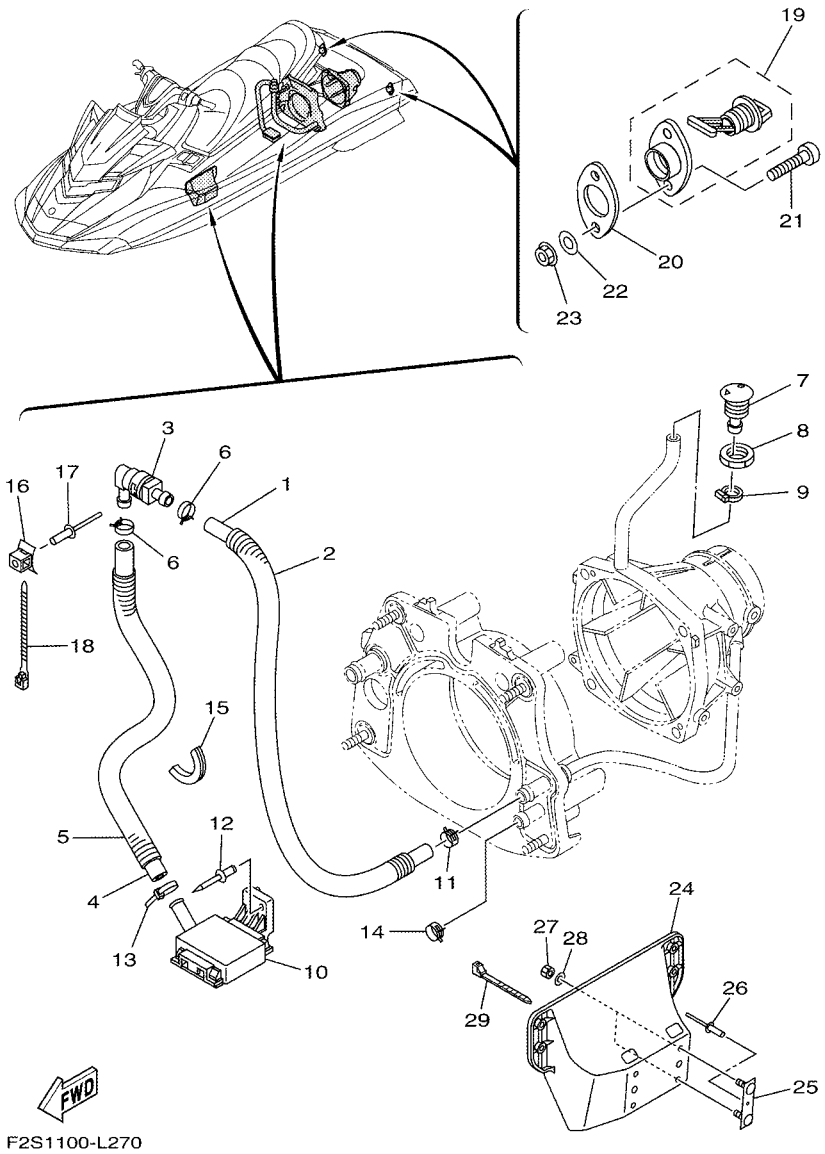

FIG. 26 HULL & DECK

REF. NO.	PART NO.	DESCRIPTION	CAN	EUR				REMARKS
1	90445–20804	HOSE (L860)	1	1				
2	90446–27M73	HOSE (L700)	1	1				
3	68N–5112T–00	JOINT, HOSE	1	1				
4	90445–20800	HOSE (L500)	1	1				
5	90446–27M55	TUBE (L400)	1	1				
6	90467–18804	CLIP	2	2				
7	F1W–U269B–00	SPOUT	1	1				
8	EU0–61652–00	NUT	1	1				
9	90601–118UF	BAND, HOSE 18	1	1				
10	F1B–U761D–02	STRAINER, BILGE	1	1				
11	90467–21800	CLIP	1	1				
12	90267–489U8	RIVET, BLIND	1	1				
13	90601–200U1	BAND	1	1				
14	90467–200A0	CLIP	1	1				
15	F1S–U828H–01	TRIM, 1	1	1				
16	F1W–U828M–00	BASE, CLAMP	1	1				
17	90267–48802	RIVET, BLIND	1	1				
18	90464–32801	CLAMP	1	1				
19	F1S–U2280–00	DRAIN PLUG ASSY.	2	2				
20	F1S–U2285–00	PACKING, DRAIN	2	2				
21	9788R–05025	SCREW, PAN HEAD	4	4				
22	9299R–05200	WASHER	4	4				
23	9572R–05300	NUT, FLANGE	4	4				
24	F1W–U8572–01	BRACKET 2	1	1				
25	F1K–U826C–03	BRACKET	2	2				
26	90267–489U1	RIVET,BLIND	2	2				
27	9572R–08300	NUT, FLANGE	4	4				

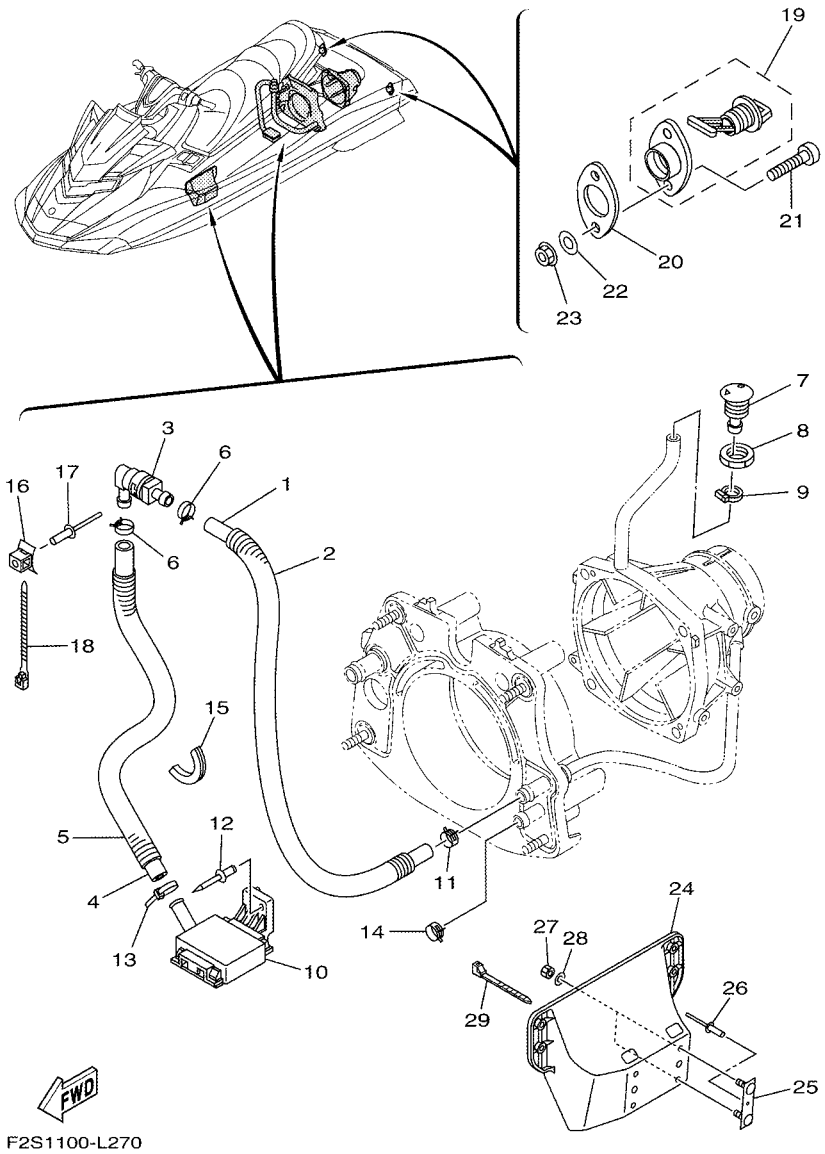

FIG. 26 HULL & DECK

REF. NO.	PART NO.	DESCRIPTION	CAN	EUR				REMARKS
28	9299R–08200	WASHER	4	4				
29	90464–32801	CLAMP	1	1				

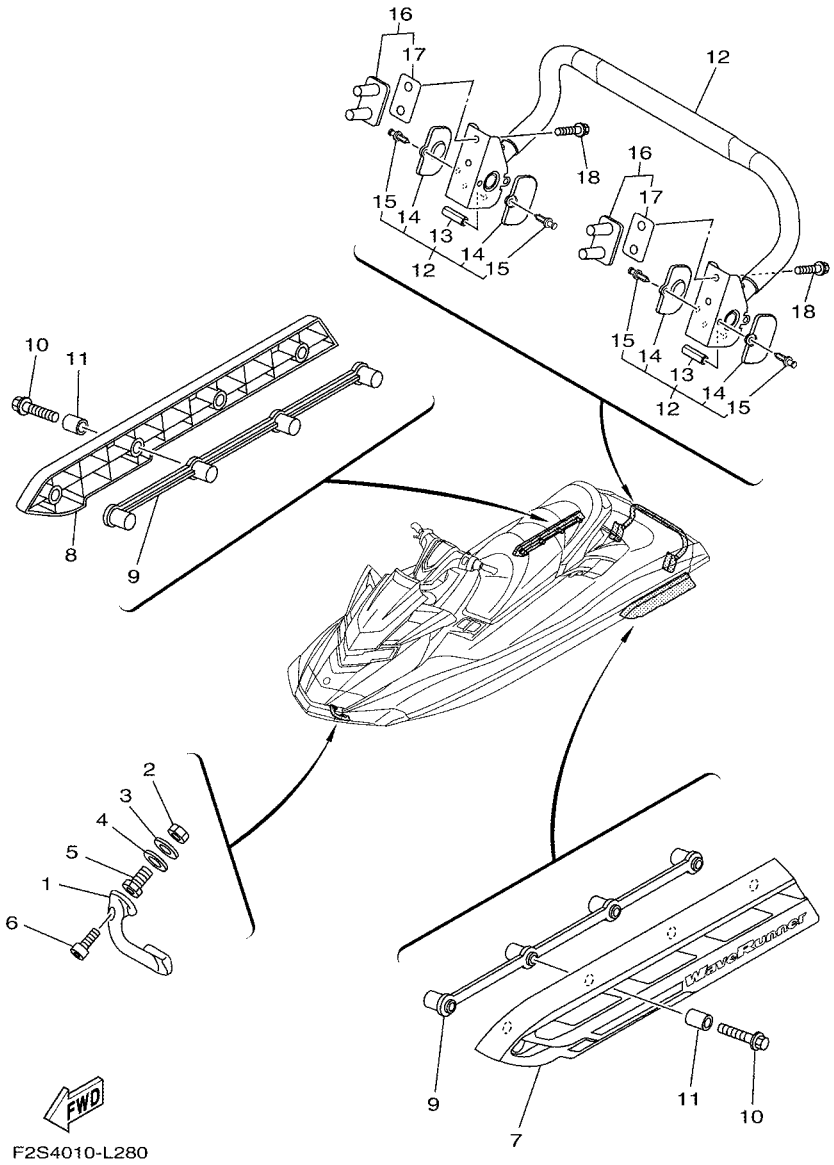

FIG. 27 HULL & DECK 2

REF. NO.	PART NO.	DESCRIPTION	CAN	EUR				REMARKS
1	F1K–61624–00	BOWEYE 1	1	1				
2	99780–12600	NUT.HEX.(COARS)	2	2				
3	92990–12200	WASHER, PLAIN	2	2				
4	F0X–61637–00	WASHER	2	2				
5	F0X–61652–00	NUT (BOLT/NUT)	2	2				
6	90110–06040	BOLT, HEXAGON SOCKET HEAD	2	2				
7	F2S–U883N–01	STABILIZER LH	1	1				
8	F2S–U883P–01	STABILIZER RH	1	1				
9	F2S–U883T–00	BRACKET,STABILIZER	2	2				
10	90105–08860	BOLT, FLANGE	8	8				
11	F2N–U8169–00	SPACER	8	8				
12	F2S–U278A–00	LADDER, STEP ASSY	1	1				
13	F1W–U771H–00	.SLEEVE 1	2	2				
14	F2C–U377H–00	.INNER, COVER SIDE 1	4	4				
15	F2C–U1314–00	.PIN	4	4				
16	F2S–U278F–00	BRACKET, LADDER LH	2	2				
17	F2S–U278H–00	.PACKING, BRKT. 1	1	1				
18	90119–08861	BOLT, WITH WASHER	4	4				

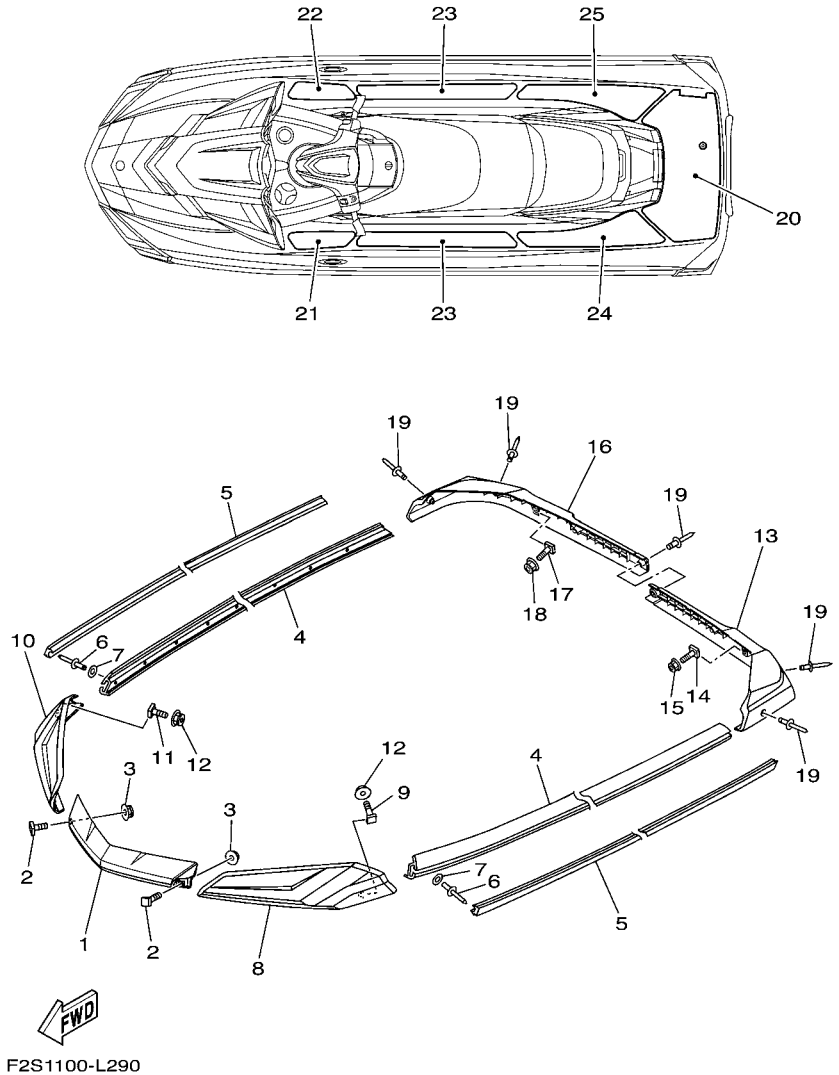

FIG. 28 GUNWALE & MAT

REF. NO.	PART NO.	DESCRIPTION	CAN	EUR				REMARKS
1	F2S–U2511–00	GUNWALE, BOW	1	1				GRAY
2	F1W–U491K–00	BOLT, SPECIAL	4	4				
3	F2N–U142L–00	NUT, LOCK	4	4				
4	F2S–U2512–00	GUNWALE, SIDE	2	2				GRAY
5	F2S–U2519–01	INNER,GUNWALE	2	2				YAMAHA BLACK
6	90267–489U8	RIVET, BLIND	30	30				
7	9299R–05200	WASHER	30	30				
8	F2S–U252E–03	JOINT, GUNWALE LH	1	1				GRAY
9	F1W–U491K–00	BOLT, SPECIAL	3	3				
10	F2S–U252F–03	JOINT, GUNWALE RH	1	1				GRAY
11	F1W–U491K–00	BOLT, SPECIAL	3	3				
12	F2N–U142L–00	NUT, LOCK	6	6				
13	F2S–U251D–01	GUNWALE, STERN 1 LH	1	1				GRAY
14	F1W–U491K–00	BOLT, SPECIAL	1	1				
15	F2N–U142L–00	NUT, LOCK	1	1				
16	F2S–U251E–01	GUNWALE, STERN 2 RH	1	1				GRAY
17	F1W–U491K–00	BOLT, SPECIAL	1	1				
18	F2N–U142L–00	NUT, LOCK	1	1				
19	90267–48825	RIVET, BLIND	7	7				
20	F2S–U3581–01	MAT, UPPER	1	1				DARK GRAY & BLACK
21	F2S–U351H–00	MAT, STEP 1	1	1				DARK GRAY & BLACK
22	F2S–U351J–00	MAT, STEP 2	1	1				DARK GRAY & BLACK
23	F2S–U351K–00	MAT, STEP 3	2	2				DARK GRAY & BLACK
24	F2S–U351M–00	MAT, STEP 4	1	1				DARK GRAY & BLACK
25	F2S–U351N–00	MAT, STEP 5	1	1				DARK GRAY & BLACK

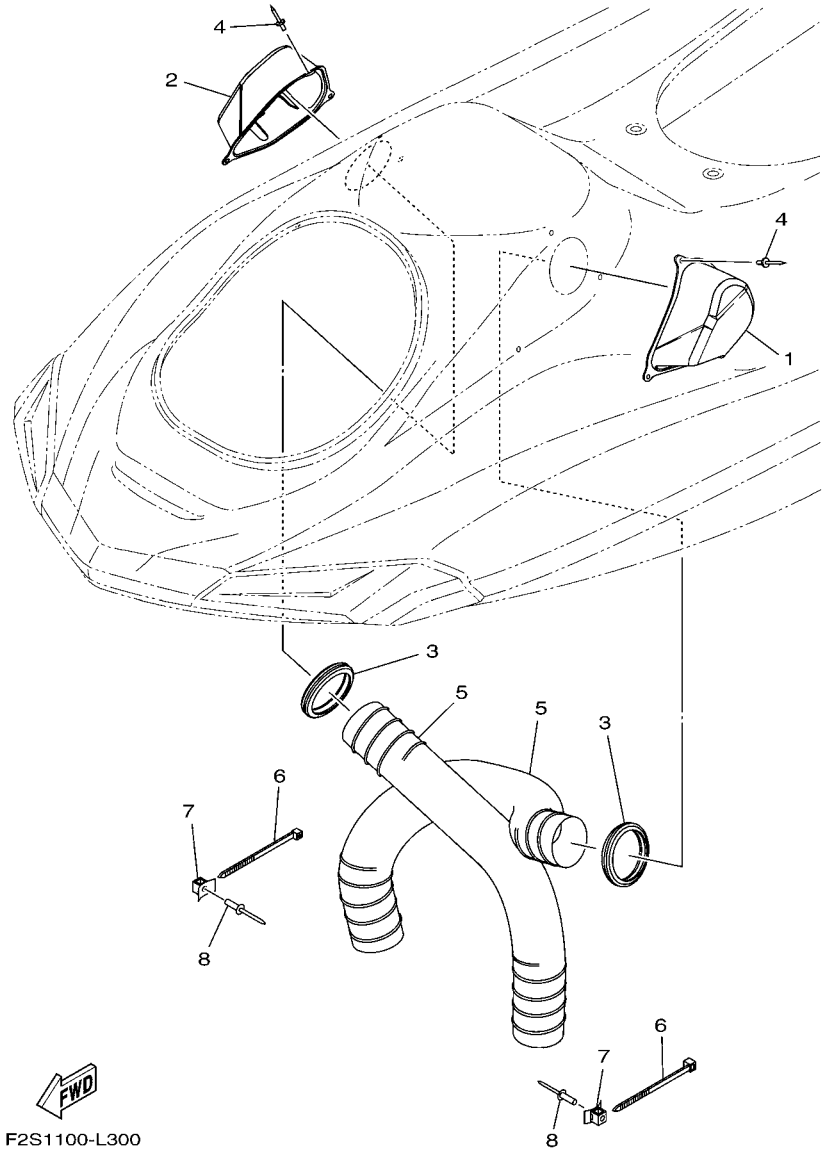

FIG. 29 VENTILATION

REF. NO.	PART NO.	DESCRIPTION	CAN	EUR				REMARKS
1	F2S–U2187–00	BOX, INDUCTION 1	1	1				
2	F2S–U2188–00	BOX, INDUCTION 2	1	1				
3	F2N–U2127–00	BASE, AIR INTAKE	2	2				
4	90267–48806	RIVET, BLIND	6	6				
5	F2N–U213G–01	HOSE, VENTILATOR 2	2	2				
6	90464–99804	CLAMP	2	2				
7	F1W–U828M–00	BASE, CLAMP	2	2				
8	90267–489U6	RIVET, BLIND	2	2				

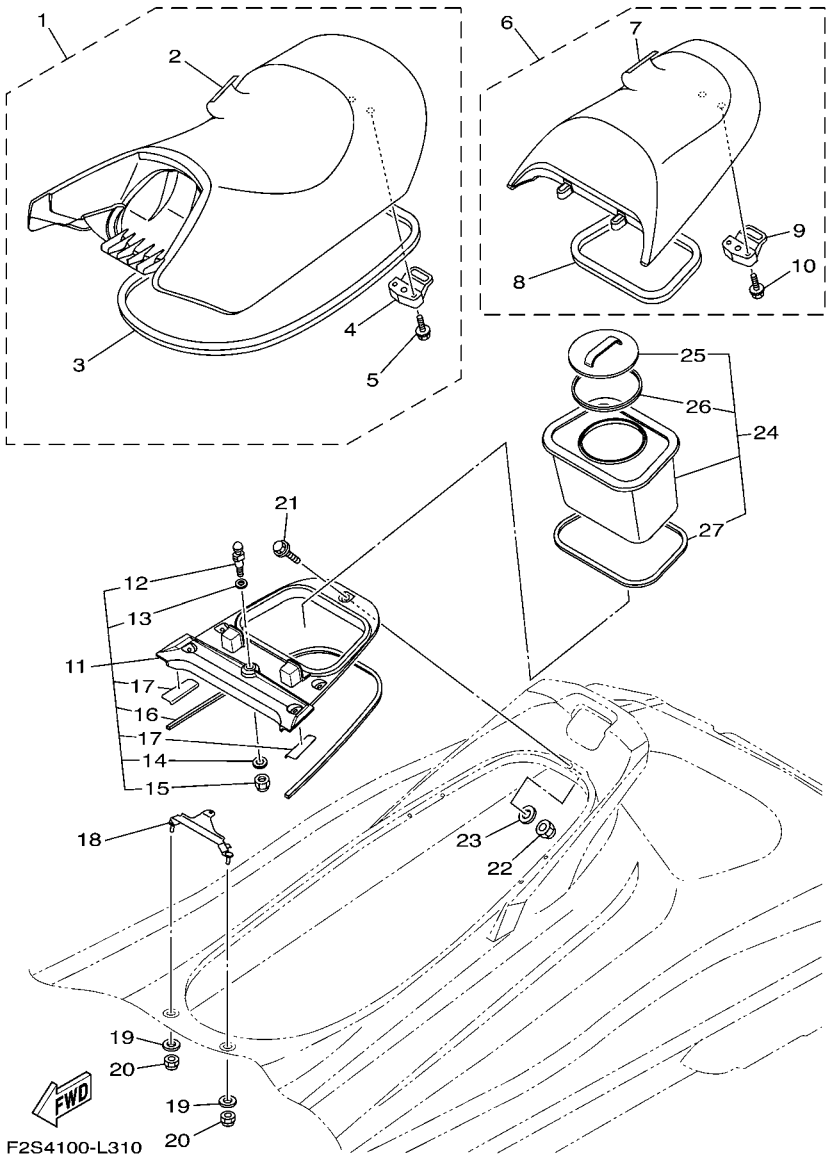

FIG. 30 SEAT & UNDER LOCKER

REF. NO.	PART NO.	DESCRIPTION	CAN	EUR				REMARKS
1	F2S–U371A–20	DOUBLE SEAT ASSY	1	1				
2	F2S–U371B–20	.COVER, SEAT 1	1	1				
3	F1W–U2664–01	.PACKING	1	1				
4	F2C–U3850–00	.SEAT LOCK ASSY	1	1				
5	90119–069UP	.BOLT, WITH WASHER	2	2				
6	F2S–U372A–20	SINGLE SEAT ASSY	1	1				
7	F2S–U372B–20	.COVER, SEAT	1	1				
8	F2C–U266D–01	.PACKING 5	1	1				
9	F2C–U3850–00	.SEAT LOCK ASSY	1	1				
10	90119–069UP	.BOLT, WITH WASHER	2	2				
11	F2S–U890L–04	DECK BEAM ASSY	1	1				
12	GH1–U3774–00	.PIN	1	1				
13	90201–109U6	.WASHER, PLATE	1	1				
14	9299R–10200	.WASHER	1	1				
15	9572R–10300	.NUT, NYLON	1	1				
16	F2S–U375E–00	.PACKING 1	1	1				
17	F2S–U8244–00	.PACKING	2	2				
18	F2C–U378C–00	STAY, SEAT 1	1	1				
19	90201–099U3	WASHER, PLATE	2	2				
20	9572R–08300	NUT, FLANGE	2	2				
21	90119–08828	BOLT, WITH WASHER	5	5				
22	9572R–08300	NUT, FLANGE	5	5				
23	9299R–08200	WASHER	5	5				
24	F2C–U591A–02	CASE,ASSY 1	1	1				
25	F2C–U591C–00	.CAP,CASE	1	1				
26	F2C–U591D–01	.PACKING,CASE	1	1				
27	F2C–U266E–00	.PACKING,6	1	1				

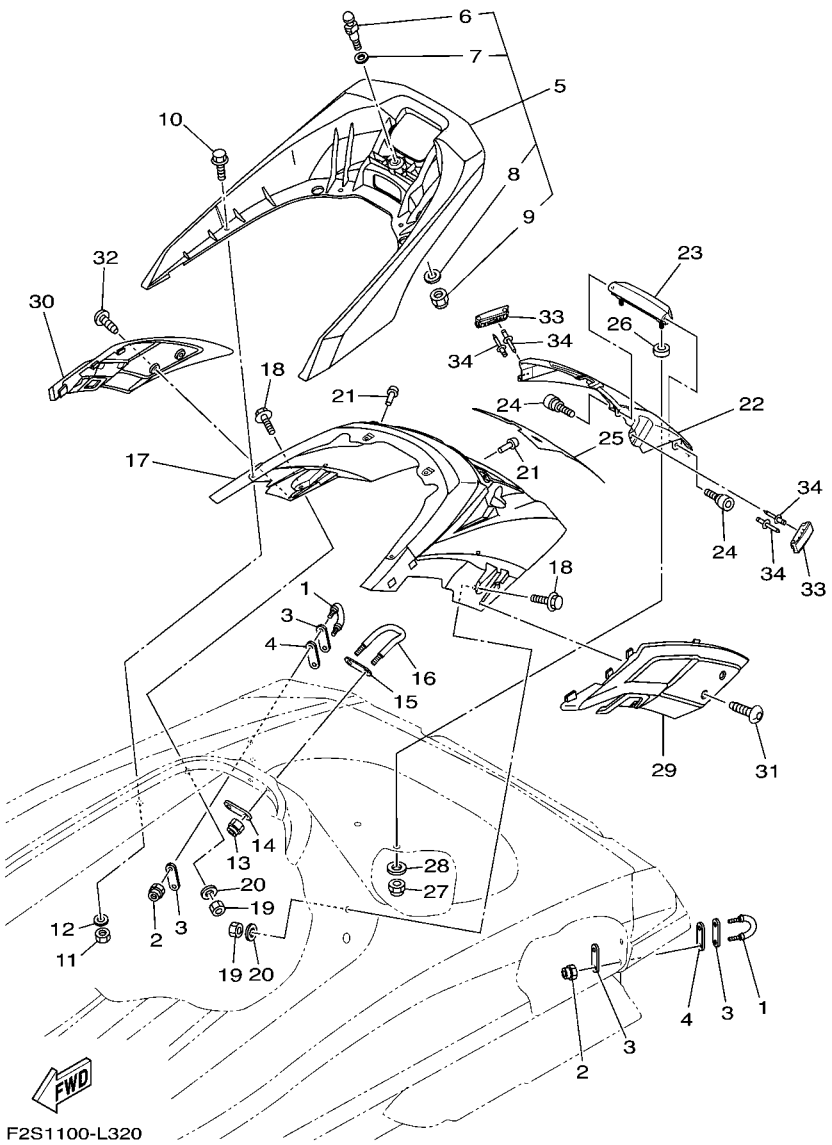

FIG. 31 SEAT & UNDER LOCKER 2

REF. NO.	PART NO.	DESCRIPTION	CAN	EUR				REMARKS
1	F2N–U1628–02	STERN EYE	2	2				
2	9572R–08300	NUT, FLANGE	4	4				
3	GP7–U4953–10	PLATE A	4	4				
4	F1B–U1653–02	PACKING	2	2				
5	F2S–U270B–02	GRIP ASSY	1	1				
6	GH1–U3774–00	.PIN	1	1				
7	90201–109U6	.WASHER, PLATE	1	1				
8	9299R–10200	.WASHER	1	1				
9	9572R–10300	.NUT, NYLON	1	1				
10	90119–08829	BOLT, WITH WASHER	4	4				
11	9572R–08300	NUT, FLANGE	4	4				
12	9299R–08200	WASHER	4	4				
13	9572R–08300	NUT, FLANGE	2	2				
14	GP7–U4953–10	PLATE A	1	1				
15	GP7–U4953–10	PLATE A	1	1				
16	F1B–U1629–00	SKI TOWS	1	1				
17	F2S–U89A1–01–P2	STORAGE, STERN (DRMR)	1	1				
18	90119–08832	BOLT, WITH WASHER	2	2				
19	9572R–08300	NUT, FLANGE	2	2				
20	9299R–08200	WASHER	2	2				
21	F1W–U3768–01	CUSHION, RUBBER	2	2				
22	F2S–U518M–01–P2	LID LOCKER STERN (DRMR)	1	1				
23	F2S–U271F–01	GRIP, LOWER	1	1				
24	F2S–U2624–00	BOLT	2	2				
25	F2S–U519D–10	PACKING CASE	1	1				
26	F2S–U2284–00	PACKING	2	2				
27	9572R–08300	NUT, FLANGE	2	2				

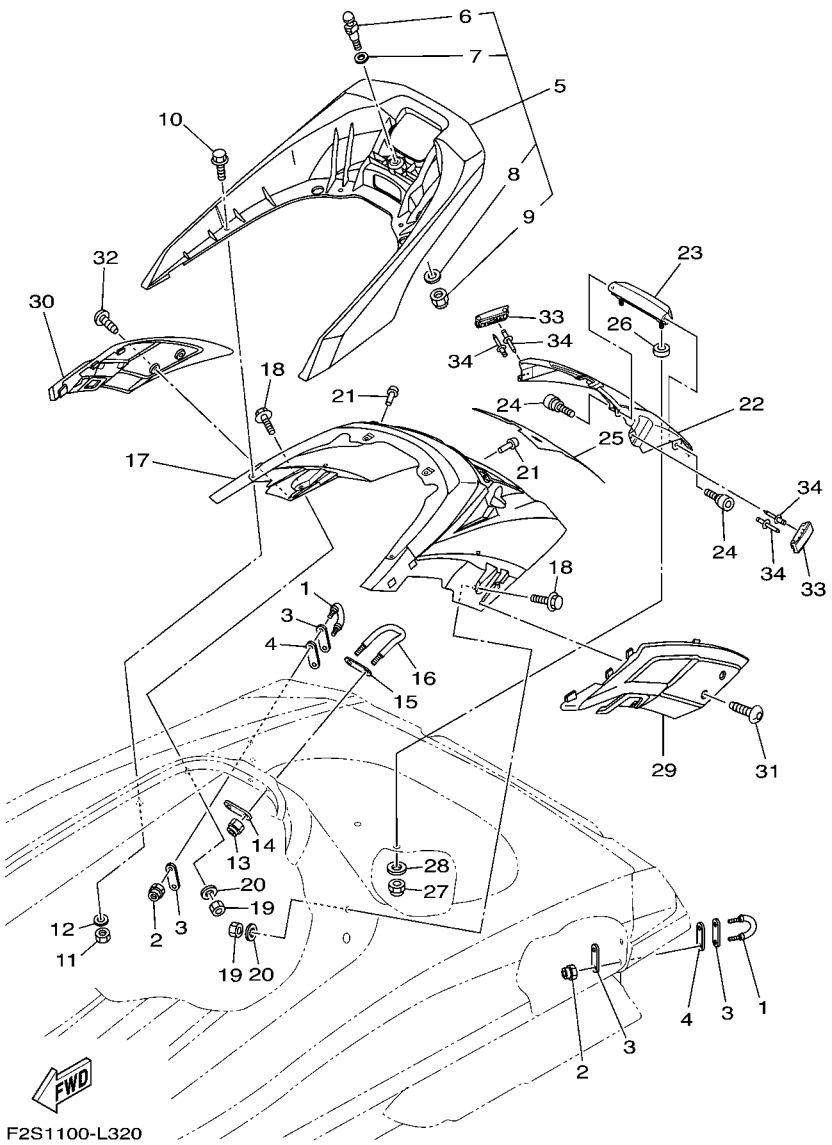

FIG. 31 SEAT & UNDER LOCKER 2

REF. NO.	PART NO.	DESCRIPTION	CAN	EUR				REMARKS
28	9299R–08200	WASHER	2	2				
29	F2S–U890M–03	STERN COVER ASSY 1	1	1				
30	F2S–U890N–03	STERN COVER ASSY 2	1	1				
31	F2S–U13C1–00	SCREW	2	2				
32	F2S–U13C1–00	SCREW	2	2				
33	F2S–U264L–01	LOCK 1	2	2				
34	90267–409U3	RIVET, BLIND	8	8				

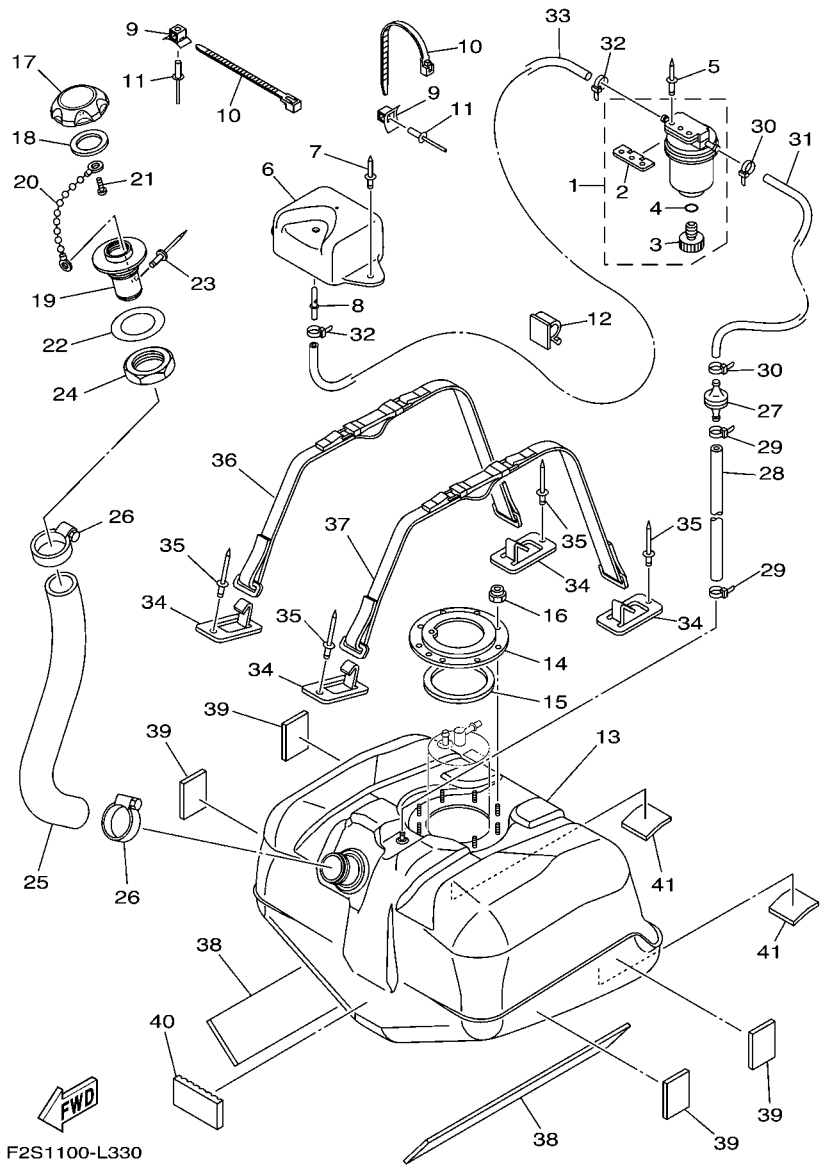

FIG. 32 FUEL TANK

REF. NO.	PART NO.	DESCRIPTION	CAN	EUR				REMARKS
1	F2F–6214A–00	FILTER, VENT ASSY	1	1				
2	EW2–62142–00	.PLATE, FILTER	1	1				
3	70R–24543–00	.PLUG, DRAIN	1	1				
4	70R–24489–00	.O-RING	1	1				
5	90267–489U2	RIVET, BLIND	2	2				
6	F1W–U2159–00	SOCKET, VENTILATION	1	1				
7	90267–489U6	RIVET, BLIND	2	2				
8	F1G–62149–00	PIPE, VENTILATION	1	1				
9	F1W–U828M–00	BASE, CLAMP	2	2				
10	90464–32801	CLAMP	2	2				
11	90267–489U6	RIVET, BLIND	2	2				
12	90464–17800	CLAMP	1	1				
13	F2S–U7711–01	TANK, FUEL	1	1				
14	F1B–U7773–00	RING	1	1				
15	F1B–67747–00	PACKING, SEAL	1	1				
16	9572R–06300	NUT, NYLON	9	9				
17	F2N–U7831–10	CAP, FUEL FILLER	1	1				BLACK
18	GP7–U7832–01	PACKING	1	1				
19	GP7–U7833–11	SOCKET	1	1				BLACK
20	GP7–U7835–00	CHAIN BALL	1	1				
21	90169–049U1	TAPPING SCREW	1	1				
22	GP7–U7834–10	PACKING FUEL FILLER	1	1				
23	90267–329UR	RIVET, BLIND	1	1				
24	GP7–U783F–00	NUT, FUEL FILLER	1	1				
25	F2S–U7844–00	HOSE	1	1				
26	90601–155U4	BAND, HOSE 55	2	2				
27	EU0–67767–31	CHECK VALVE	1	1				

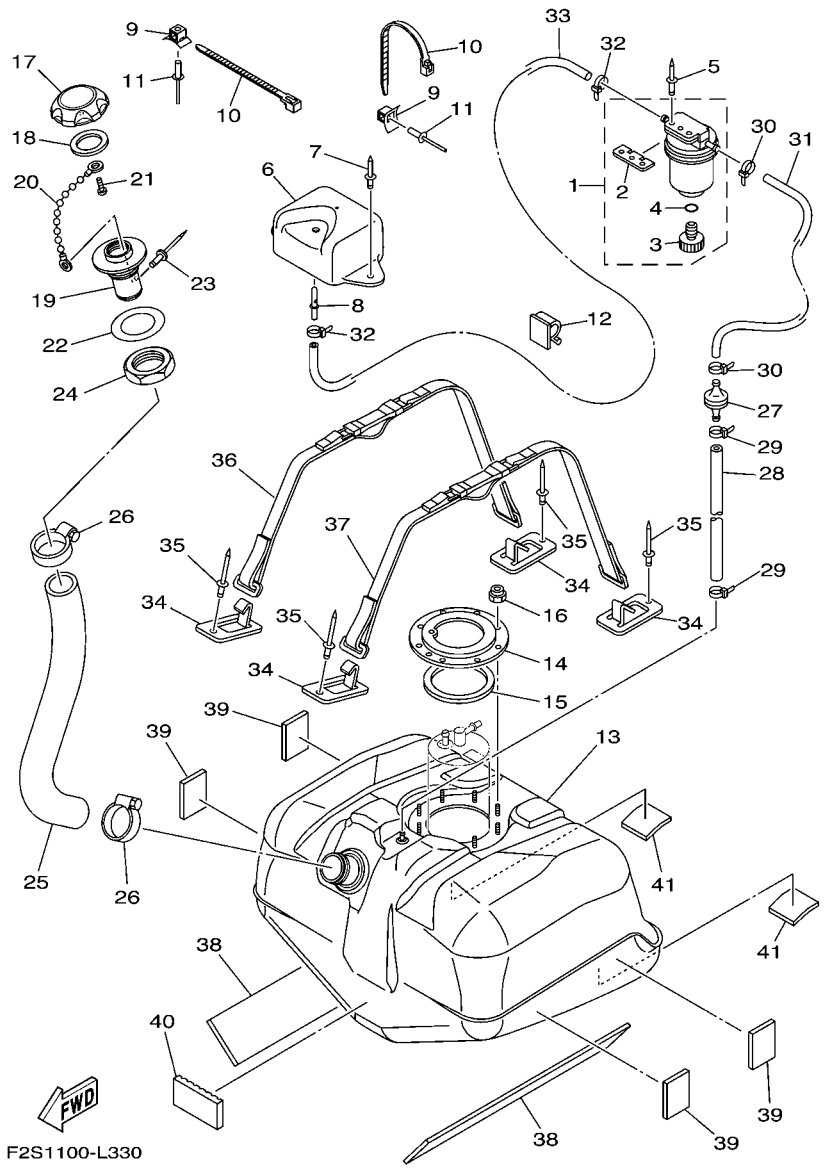

FIG. 32 FUEL TANK

REF. NO.	PART NO.	DESCRIPTION	CAN	EUR				REMARKS
28	F2H–U785H–00	HOSE, AIR VENT 3	1	1				
29	90465–11829	CLAMP	2	2				
30	90465–11829	CLAMP	2	2				
31	F0D–U785G–10	HOSE, AIR VENT	1	1				
32	90465–11829	CLAMP	2	2				
33	F0D–U7856–10	HOSE, AIR VENT 3	1	1				
34	F1K–U5772–04	HOOK A	4	4				
35	90267–489U1	RIVET,BLIND	4	4				
36	F2S–67743–00	BELT, TANK 1	1	1				
37	F2S–67743–00	BELT, TANK 1	1	1				
38	F2S–U759B–00	MAT 1	2	2				
39	F1W–U759C–01	MAT 2	4	4				
40	F1K–U759C–00	MAT 2	1	1				
41	F1K–U759C–00	MAT 2	2	2				

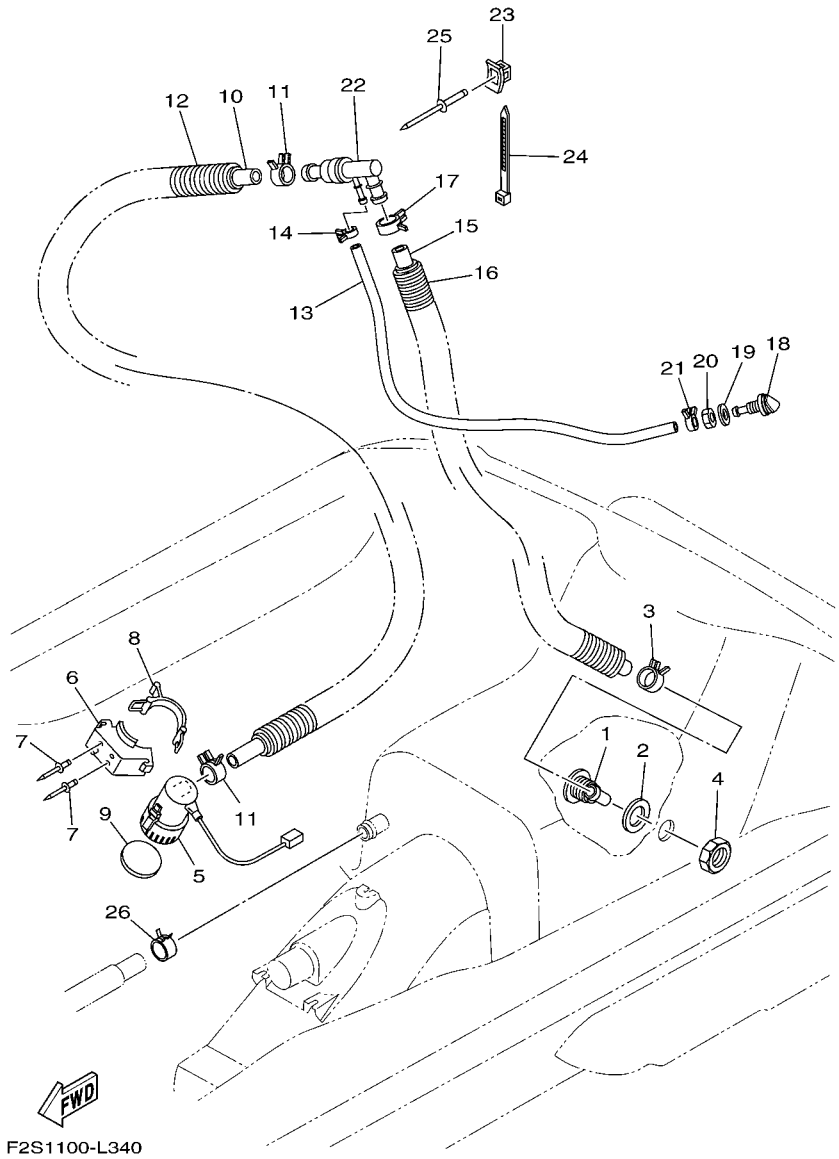

FIG. 33 BILGE PUMP

REF. NO.	PART NO.	DESCRIPTION	CAN	EUR				REMARKS
1	F1W–U224E–00	BODY, DRAIN 3	1	1				
2	F1S–U7525–01	PACKING	1	1				
3	90467–26800	CLIP	1	1				
4	F1B–62241–00	DRAIN, COCKPIT	1	1				
5	F1B–U8360–01	BILGE PUMP ASSY	1	1				
6	F1B–U7698–01	BRACKET	1	1				
7	90267–489UP	RIVET, BLIND	2	2				
8	GA7–68218–00	BAND, BATTERY	1	1				
9	F1B–U7656–00	PACKING, BILGE	1	1				
10	F1B–U7626–00	HOSE 1	1	1				
11	90467–25801	CLIP	2	2				
12	90447–28004	HOSE, WITH SPRING (L800)	1	1				
13	F2S–U7629–00	HOSE, DRAIN 2	1	1				
14	90467–14803	CLIP	1	1				
15	F1B–U7628–00	HOSE, DRAIN 3	1	1				
16	90447–28004	HOSE, WITH SPRING (L800)	1	1				
17	90467–26800	CLIP	1	1				
18	GH7–6753B–00	PILOT,WATER	1	1				
19	90430–16910	GASKET	1	1				
20	GP7–61652–00	NUT	1	1				
21	90467–14803	CLIP	1	1				
22	F1S–67620–00	HOSE JOINT	1	1				
23	F1W–U828M–00	BASE, CLAMP	1	1				
24	F2C–U4256–00	CLAMP	1	1				
25	90267–489U6	RIVET, BLIND	1	1				
26	90467–26800	CLIP	1	1				

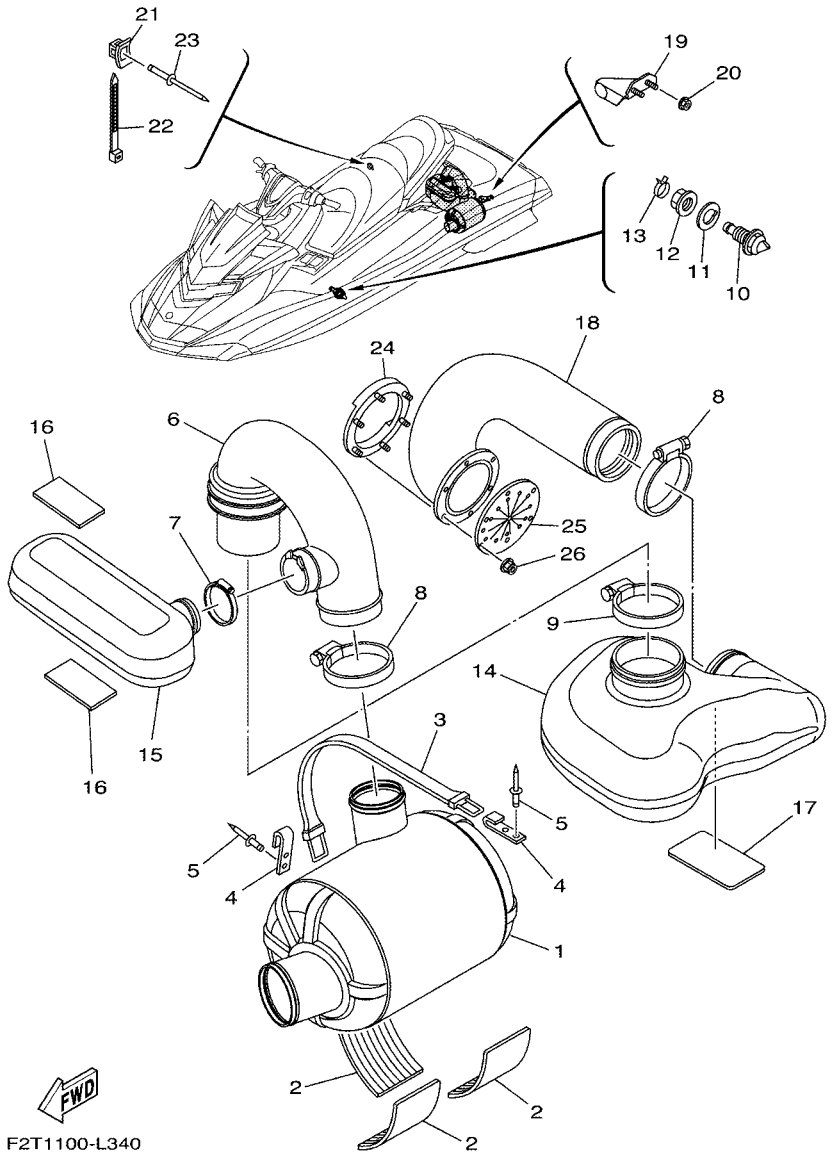

FIG. 34 EXHAUST 3

REF. NO.	PART NO.	DESCRIPTION	CAN	EUR				REMARKS
1	F1W–U7550–01	WATER LOCK COMP.	1	1				
2	F1S–U8221–00	PAD, BATTERY	3	3				
3	EW2–67821–00	BAND, FUEL TANK	1	1				
4	GA7–65772–00	HOOK A	2	2				
5	90267–489U1	RIVET,BLIND	4	4				
6	F2S–U7555–00	HOSE, EXHAUST	1	1				
7	90601–170UG	BAND, HOSE 70	1	1				
8	90450–99801	HOSE CLAMP ASSY	2	2				
9	90450–99804	HOSE CLAMP ASSY	1	1				
10	F2C–U753B–01	PILOT, WATER	1	1				
11	F2C–U7564–00	GASKET	1	1				
12	F2C–U2733–00	NUT	1	1				
13	90467–17802	CLIP	1	1				
14	F2N–U4261–00	TANK, WATER	1	1				
15	F2S–U753C–00	RESONATOR 1	1	1				
16	F1K–U759C–00	MAT 2	2	2				
17	F1S–U8221–00	PAD, BATTERY	1	1				
18	F2N–U758D–00	HOSE,EXHAUST 3	1	1				
19	F2C–U755G–00	BRKT., WATER LOCK	1	1				
20	F2N–U142L–00	NUT, LOCK	2	2				
21	F1W–U828M–00	BASE, CLAMP	1	1				
22	90464–32801	CLAMP	1	1				
23	90267–48802	RIVET, BLIND	1	1				
24	F1S–U757B–01	PLATE	1	1				
25	F1B–U751G–00	VALVE, EXHAUST	1	1				
26	F2N–U142L–00	NUT, LOCK	6	6				

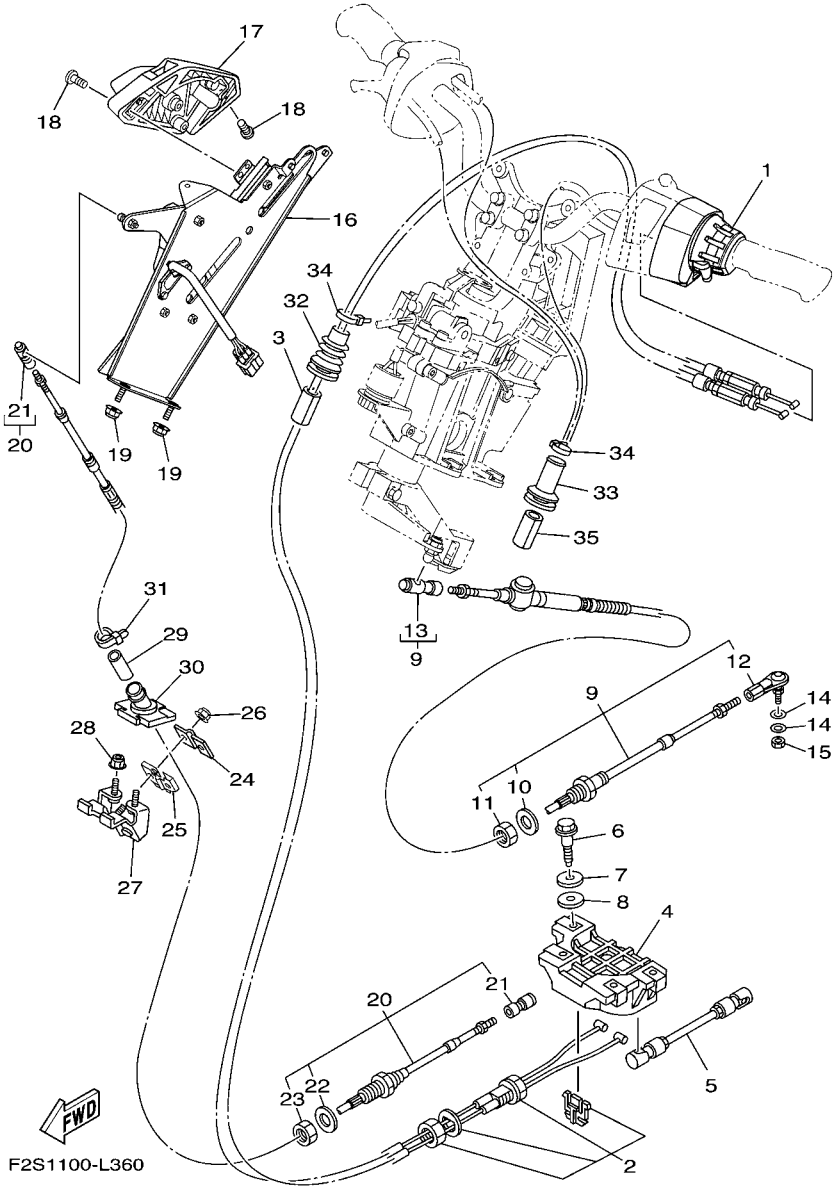

FIG. 35 CONTROL CABLE

REF. NO.	PART NO.	DESCRIPTION	CAN	EUR				REMARKS
1	F2S–6153A–00	NOZZLE,CONTROL ASSY	1	1				
2	F2S–6153E–00	CABLE,NOZZLE CONTROL 3	1	1				
3	GJ1–U7578–11	PACKING, HOSE 2	1	1				
4	F1W–6153J–00	REMOCON,NOZZLE 2	1	1				
5	F1W–6150A–00	ROD ASSY	1	1				
6	90109–06233	BOLT	4	4				
7	90201–099U3	WASHER, PLATE	4	4				
8	90202–08002	WASHER, PLATE	4	4				
9	F1S–61481–10	CABLE, STEERING	1	1				
10	F1B–61438–00	.PACKING C	1	1				
11	F1B–6151S–00	.NUT	1	1				
12	F1B–61461–02	.STUD, JOINT BALL	1	1				
13	F2N–61460–00	.BALL JOINT ASSY	1	1				
14	90201–06906	WASHER, PLATE	2	2				
15	9538R–06700	NUT	1	1				
16	F2S–6134A–01	REMOCON. LEVER ASSY.	1	1				
17	F2S–62714–00	GRIP	1	1				
18	90154–06017	SCREW, BINDING	2	2				
19	F2N–U142L–00	NUT, LOCK	2	2				
20	F2S–U149C–01	CABLE,REVERSE	1	1				
21	F0V–U1461–00	.STUD, JOINT BALL	2	2				
22	F2S–U1438–00	.PACKING C	1	1				
23	F2S–U151S–00	.NUT	1	1				
24	GH1–61468–01	STOPPER, CABLE	1	1				
25	GU5–6146K–10	HOLDER, STOPPER	1	1				
26	F2N–U142L–00	NUT, LOCK	2	2				
27	F2S–U1467–10	BRACKET,STOPPER CABLE	1	1				

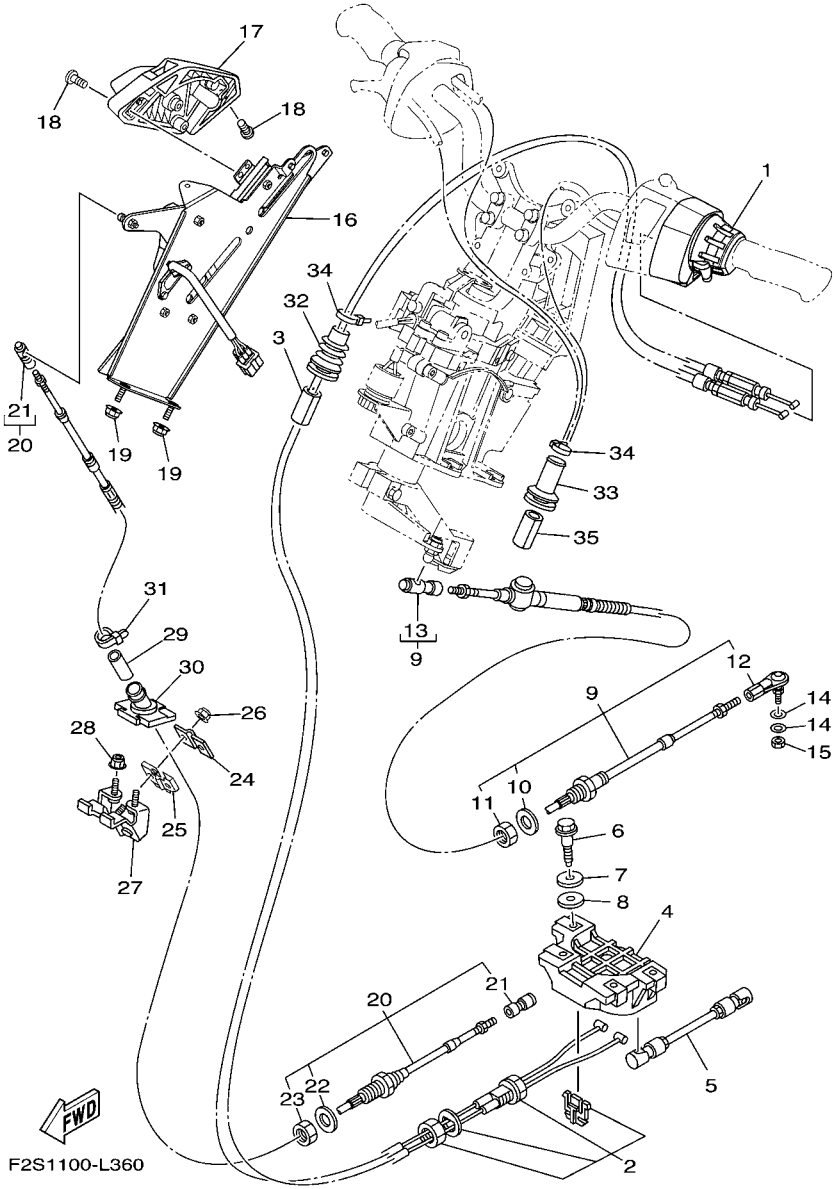

FIG. 35 CONTROL CABLE

REF. NO.	PART NO.	DESCRIPTION	CAN	EUR				REMARKS
28	F2N–U142L–00	NUT, LOCK	2	2				
29	F1W–U146G–00	PACKING, CABLE	1	1				
30	F2S–U146G–10	PACKING, CABLE	1	1				
31	90465–11829	CLAMP	1	1				
32	F0D–6822E–00	GROMMET	1	1				
33	GU2–6822E–01	GROMMET	1	1				
34	90601–200U1	BAND	2	2				
35	GJ1–U7578–11	PACKING, HOSE 2	1	1				

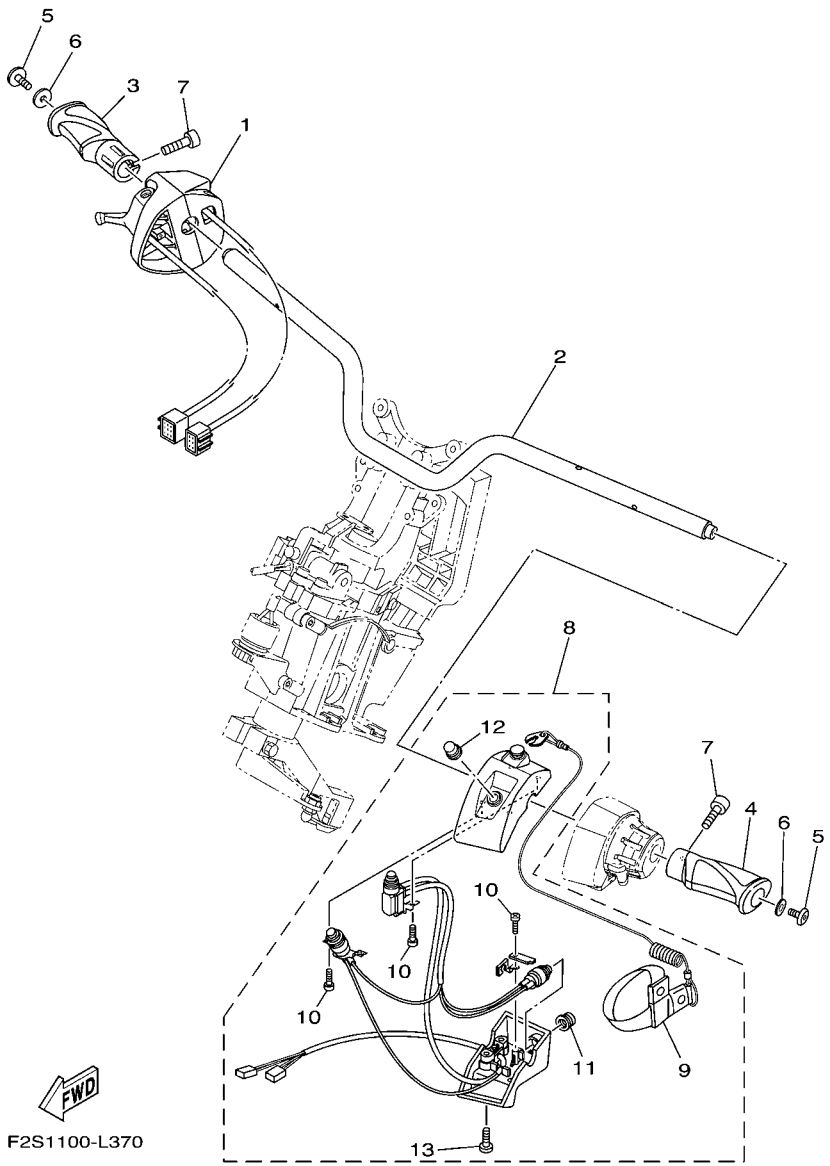

FIG. 36 STEERING 1

REF. NO.	PART NO.	DESCRIPTION	CAN	EUR				REMARKS
1	6CS–26250–00	THROTTLE LEVER ASSY	1	1				
2	F2S–U1552–00	HANDLE	1	1				
3	F2S–U155D–02	GRIP, HANDLE	1	1				
4	F2S–U155C–02	GRIP,HANDLE	1	1				
5	90110–06382	BOLT, HEXAGON SOCKET HEAD	2	2				
6	90201–068G0	WASHER, PLATE	2	2				
7	F2S–U1516–00	BOLT	2	2				
8	F2S–68310–00	SWITCH BOX ASSY	1	1				
9	EW2–68348–00	.LANYARD, STOP SWITCH	1	1				
10	97780–30610	.SCREW, TAPPING	5	5				
11	FK7–68312–02	.STOP BUTTON COMP	1	1				
12	FK7–68313–02	.START BUTTON COMP.	1	1				
13	98580–05030	.SCREW, PAN HEAD	2	2				

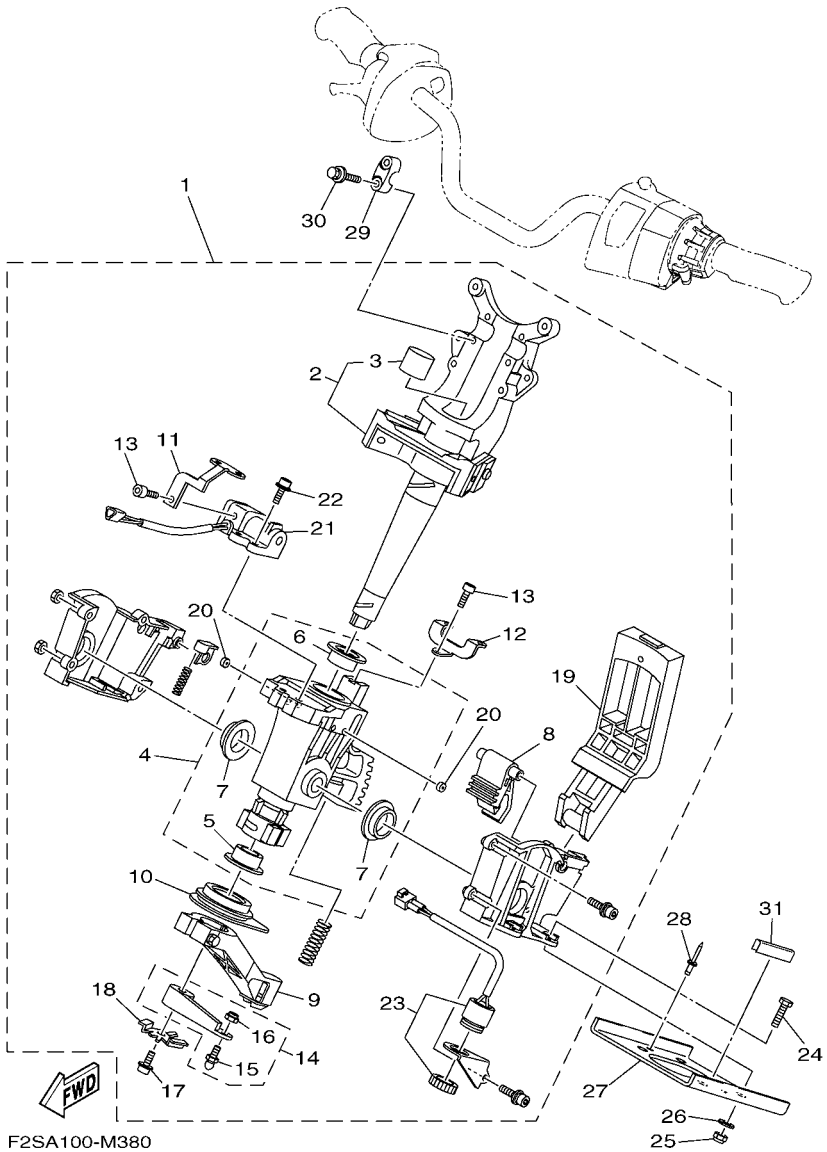

FIG. 37 STEERING 2

REF. NO.	PART NO.	DESCRIPTION	CAN	EUR				REMARKS
1	F2S–61400–00	STEERING MASTER ASSY	1	1				
2	F1W–67410–11	.SHAFT ASSY	1	1				
3	F1W–61435–00	..SEAL, PIPE 30	1	1				
4	F1W–6773D–00	.TUBE & BUSHING SET	1	1				
5	F1S–6134M–00	..BUSH	1	1				
6	F2C–6134M–00	..BUSH	1	1				
7	F1S–6134M–10	..BUSH	2	2				
8	F1S–61782–00	.LOCK 1	1	1				
9	F1S–6146A–00	.CABLE STOPPER ASSY.	1	1				
10	F1S–6143C–00	.SEAL, RUBBER	1	1				
11	F1W–65938–00	.STAY 1	1	1				
12	F2S–65939–00	.STAY 2	1	1				
13	F1B–613C1–00	.SCREW	2	2				
14	F1S–6153R–01	.ARM ASSY.	1	1				
15	EU0–61461–02	..STUD, JOINT BALL	1	1				
16	95720–06300	..NUT, SELF-LOCKING	1	1				
17	F1W–61355–00	.BOLT	1	1				
18	F1W–6142B–00	.PLATE, RETAINING	1	1				
19	F2S–6151M–00	.LEVER ASSY	1	1				
20	F1W–6358B–00	.PLUG	4	4				
21	F1W–68303–00	.SENSOR ASSY	1	1				
22	F1S–61355–00	.BOLT	4	4				
23	F1S–68341–00	.BUZZER	1	1				
24	97080–08035	BOLT	4	4				
25	9572R–08300	NUT, FLANGE	4	4				
26	F1W–U725E–00	WASHER	4	4				
27	F1X–U1554–00	PLATE, RETAINING	1	1				

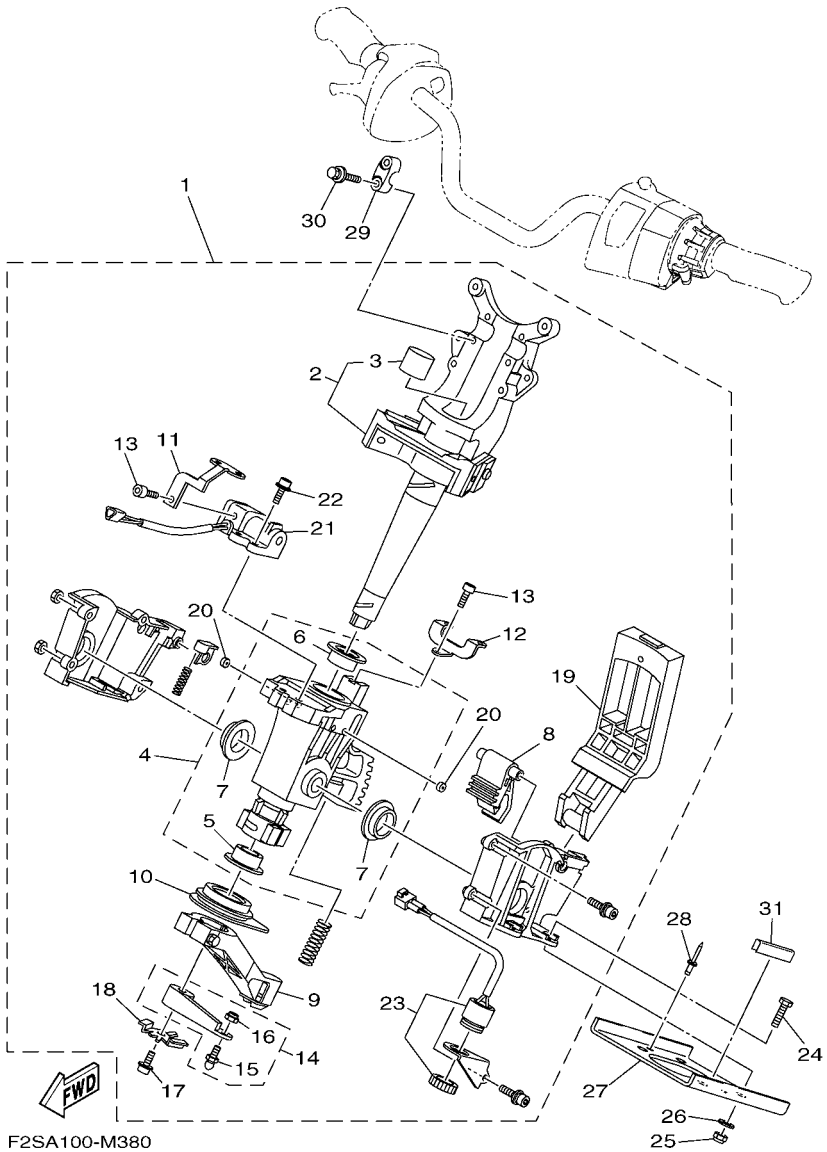

FIG. 37 STEERING 2

REF. NO.	PART NO.	DESCRIPTION	CAN	EUR				REMARKS
28	90267–489U6	RIVET, BLIND	2	2				
29	EU0–23814–31	HOLDER, HANDLE UPPER	2	2				
30	90119–089UU	BOLT, WITH WASHER	4	4				
31	F2S–U5162–00	TRIM	1	1				

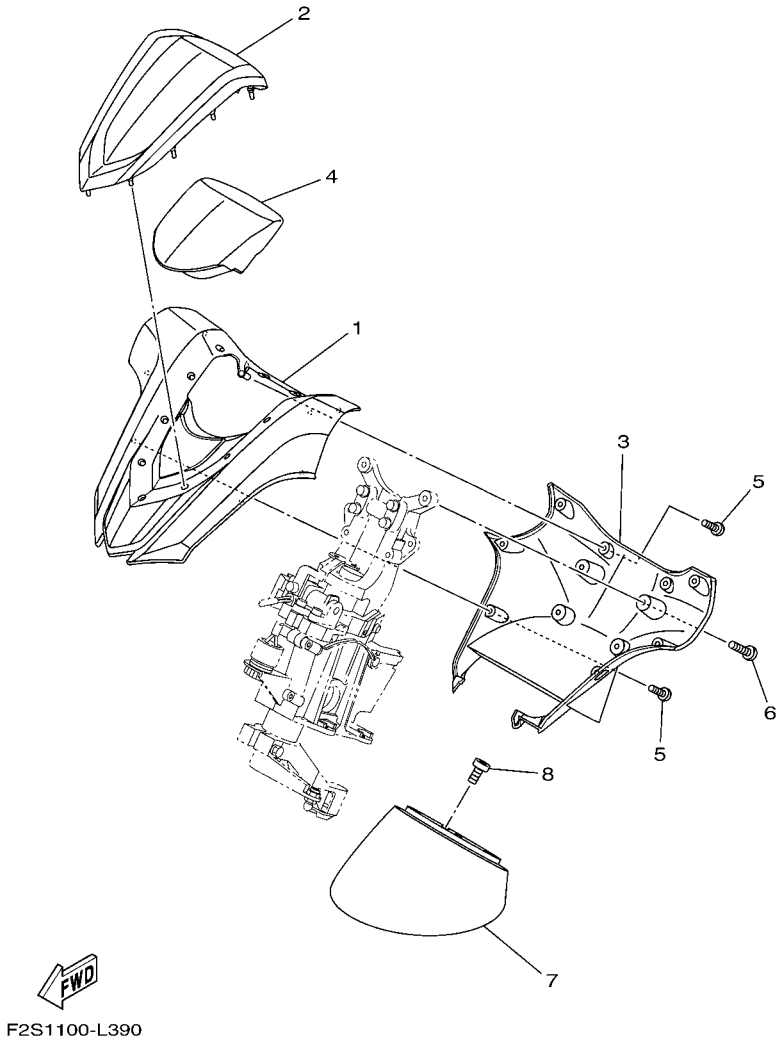

FIG. 38 STEERING 3

REF. NO.	PART NO.	DESCRIPTION	CAN	EUR				REMARKS
1	F2S–U143D–00	PAD, STEERING 1	1	1				
2	F2S–U142D–00	COVER, PAD	1	1				
3	F2S–U143E–00	PAD, STEERING 2	1	1				
4	F2S–U142E–00	CUSHION, PAD 1	1	1				
5	F2S–U13C1–00	SCREW	8	8				
6	90154–06017	SCREW, BINDING	4	4				
7	F2S–U143L–00	PAD, STEERING 3	1	1				
8	90154–06030	SCREW, BINDING	4	4				

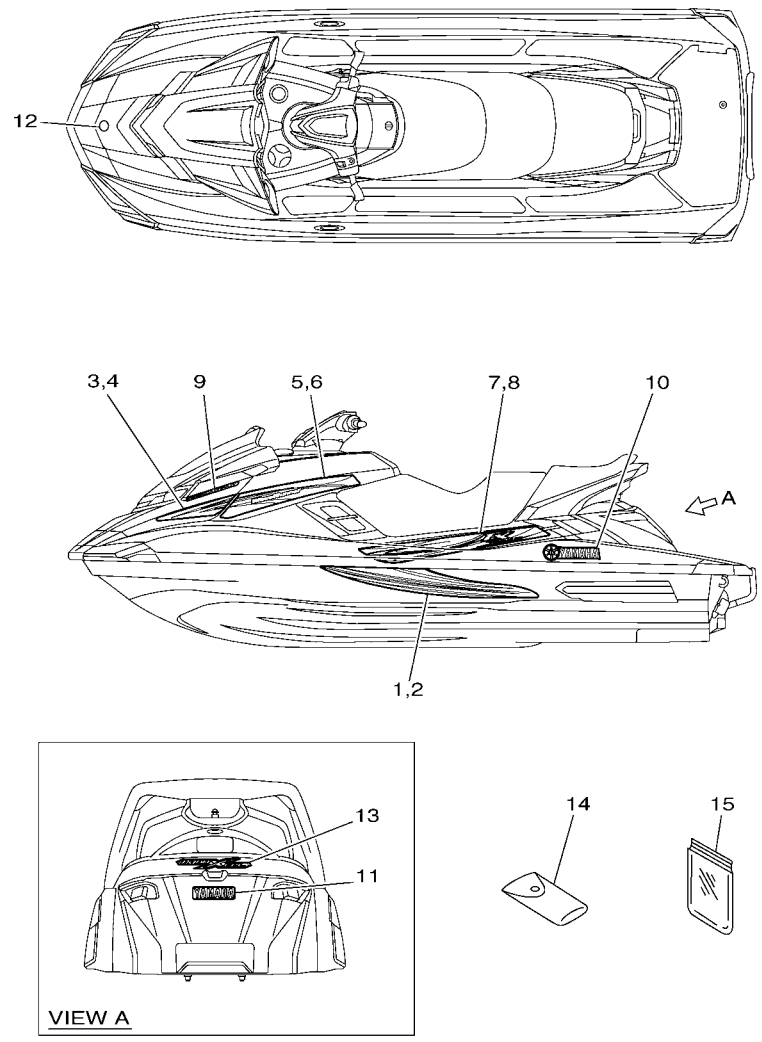

F2T7100-M390

FIG. 39 GRAPHICS

REF. NO.	PART NO.	DESCRIPTION	CAN	EUR				REMARKS
1	F2T–U417B–30	GRAPHIC 1 (LH)	1	1				
2	F2T–U417C–30	GRAPHIC 2 (RH)	1	1				
3	F2T–U417D–30	GRAPHIC 3 (LH)	1	1				
4	F2T–U417E–30	GRAPHIC 4 (RH)	1	1				
5	F2T–U417F–30	GRAPHIC 5 (LH)	1	1				
6	F2T–U417G–30	GRAPHIC 6 (RH)	1	1				
7	F2T–U417H–30	GRAPHIC 7 (LH)	1	1				
8	F2T–U417J–30	GRAPHIC 8 (RH)	1	1				
9	F2T–U417M–10	GRAPHIC C	2	2				
10	F2S–U4116–00	MARK, YAMAHA 3	2	2				
11	F2S–U4114–00	MARK, YAMAHA A	1	1				
12	F2S–6411H–00	EMBLEM, TUNING FORK	1	1				
13	F1W–U4121–00	EMBLEM A	1	1				
14	F1B–65986–10	TOOL SET	1	1				
15	EU0–65901–01	TOOL BAG	1	1				

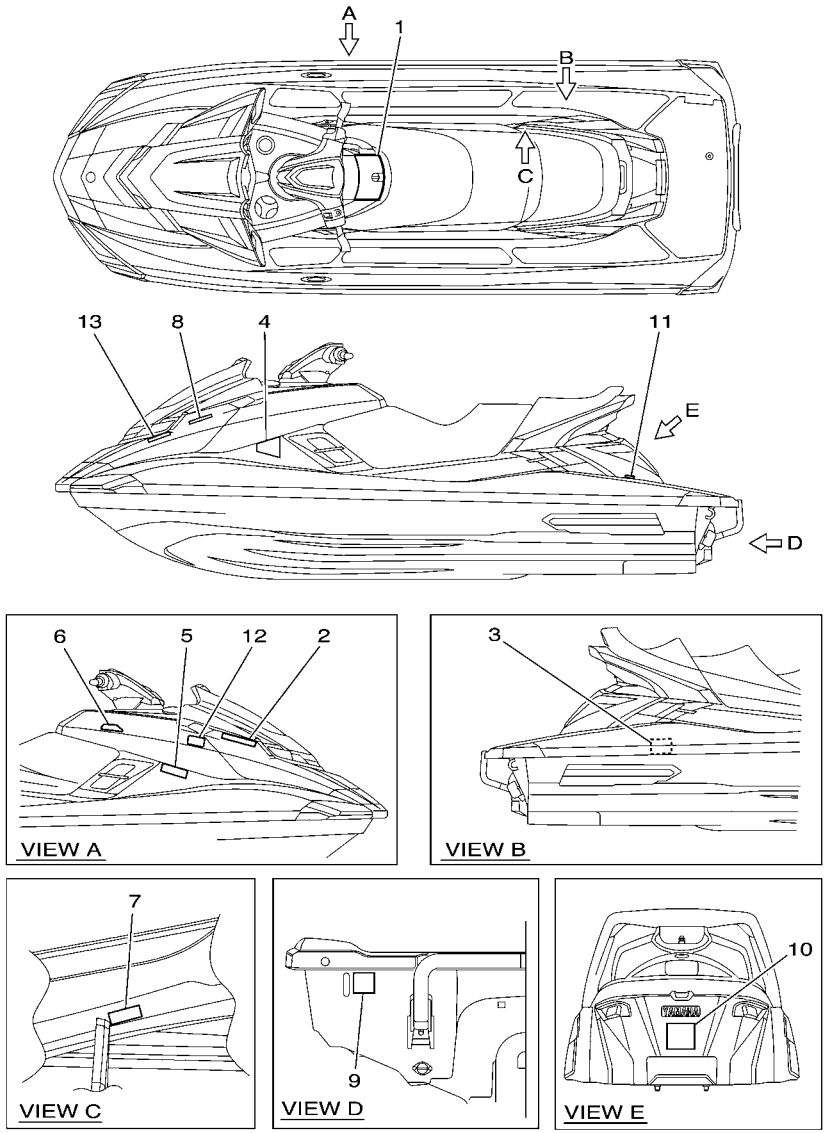

F2S4100-L410

FIG. 40 IMPORTANT LABELS

REF. NO.	PART NO.	DESCRIPTION	CAN	EUR				REMARKS
1	F2S–U41B1–10	LABEL, WARNING UNIFORM 1	1	1				
2	F1B–U41B1–21	LABEL, WARNING UNIFORM 1	1	1				
3	F1B–U41B1–31	LABEL, WARNING UNIFORM 1	1	1				
4	F1B–U41B2–01	LABEL, WARNING UNIFORM 2	1	1				
5	F1S–U415B–11	LABEL, WARNING(FUEL)	1	1				
6	F0V–U41D5–31	LABEL, WARNING SHIFT LEVER	1	1				
7	F0V–U41DB–12	LABEL, WARNING BATTERY	1	1				
8	F1B–U41F5–21	LABEL, FIRE EXTINGUISHER 1	1	1				
9	F1G–U418F–00	LABEL, RIGHTING	1	1				
10	F1S–U41E1–11	LABEL, SET 1	1	1				
11	F1S–U419E–01	LABEL 4	1					FOR CAN
12	F1X–U413P–02	LABEL, BUILDERS PLATE		1				FOR EUR
13	GP8–U416H–01	LABEL,WARNING(FRANCE)		1				FOR EUR

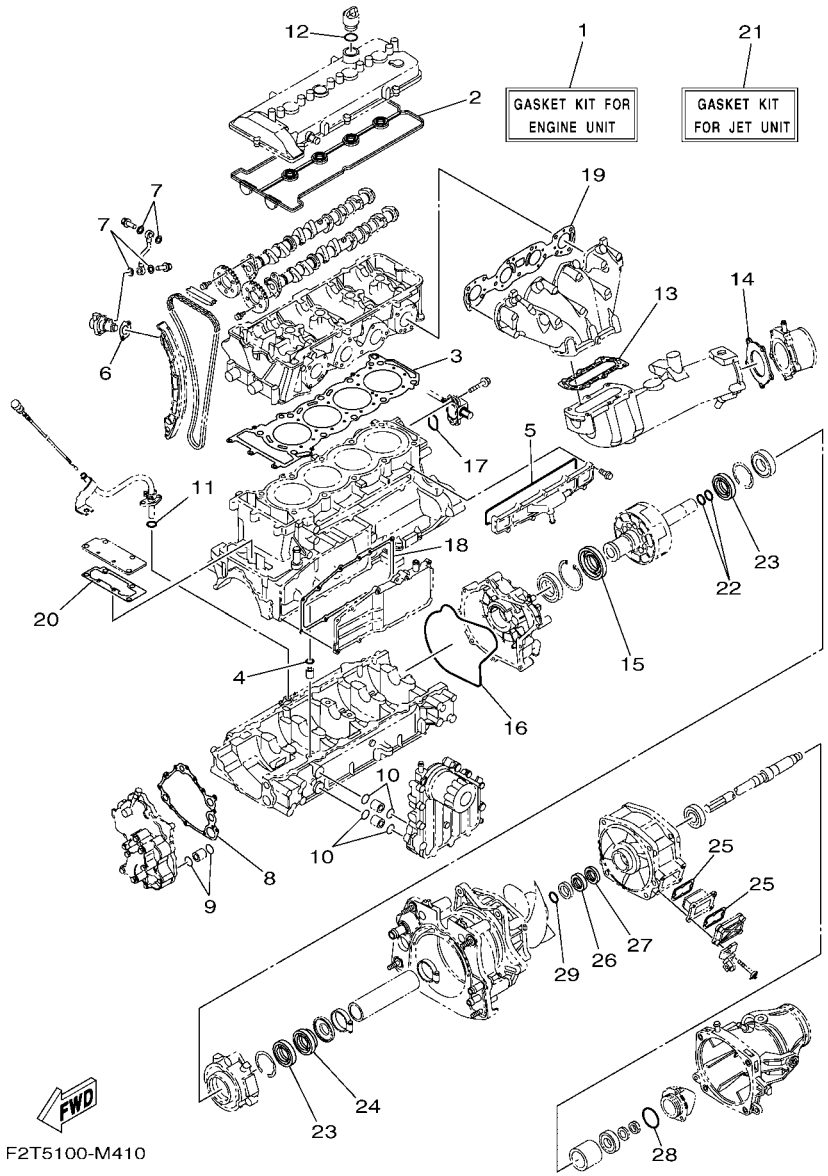

FIG. 41 REPAIR KIT 1

REF. NO.	PART NO.	DESCRIPTION	CAN	EUR				REMARKS
1	6CR–W0001–01	GASKET KIT FOR ENGINE UNIT	1	1				
2	6BH–11193–00	.GASKET, HEAD COVER 1	1	1				
3	6BH–11181–00	.GASKET, CYLINDER HEAD 1	1	1				
4	93210–11453	.O-RING	1	1				
5	6CS–12517–00	.GASKET, WATER INLET	1	1				
6	6S5–121E2–00	.GASKET	1	1				
7	90430–10007	.GASKET	4	4				
8	6S5–13563–00	.GASKET	1	1				
9	93210–21631	.O-RING	2	2				
10	93210–18322	.O-RING	4	4				
11	93210–12016	.O-RING	1	1				
12	93210–24M79	.O-RING	1	1				
13	6S5–14739–00	.GASKET, MUFFLER DAMPER 1	1	1				
14	6BH–14749–00	.GASKET, MUFFLER DAMPER 2	1	1				
15	6S5–81167–10	.OIL SEAL	1	1				
16	6S5–81168–00	.O-RING	1	1				
17	93210–32172	.O-RING	1	1				
18	6BH–13557–00	.GASKET	1	1				
19	6BH–14613–00	.GASKET, EXHAUST PIPE	1	1				
20	6BH–1131B–00	.GASKET, COVER	1	1				
21	6S5–W0001–22	GASKET KIT FOR JET UNIT	1	1				
22	93210–22MF1	.O-RING	2	2				
23	93102–29008	.OIL SEAL	2	2				
24	93102–29009	.OIL SEAL	1	1				
25	66V–42414–00	.O-RING	2	2				
26	93102–31009	.OIL SEAL	1	1				
27	93101–31001	.OIL SEAL	1	1				

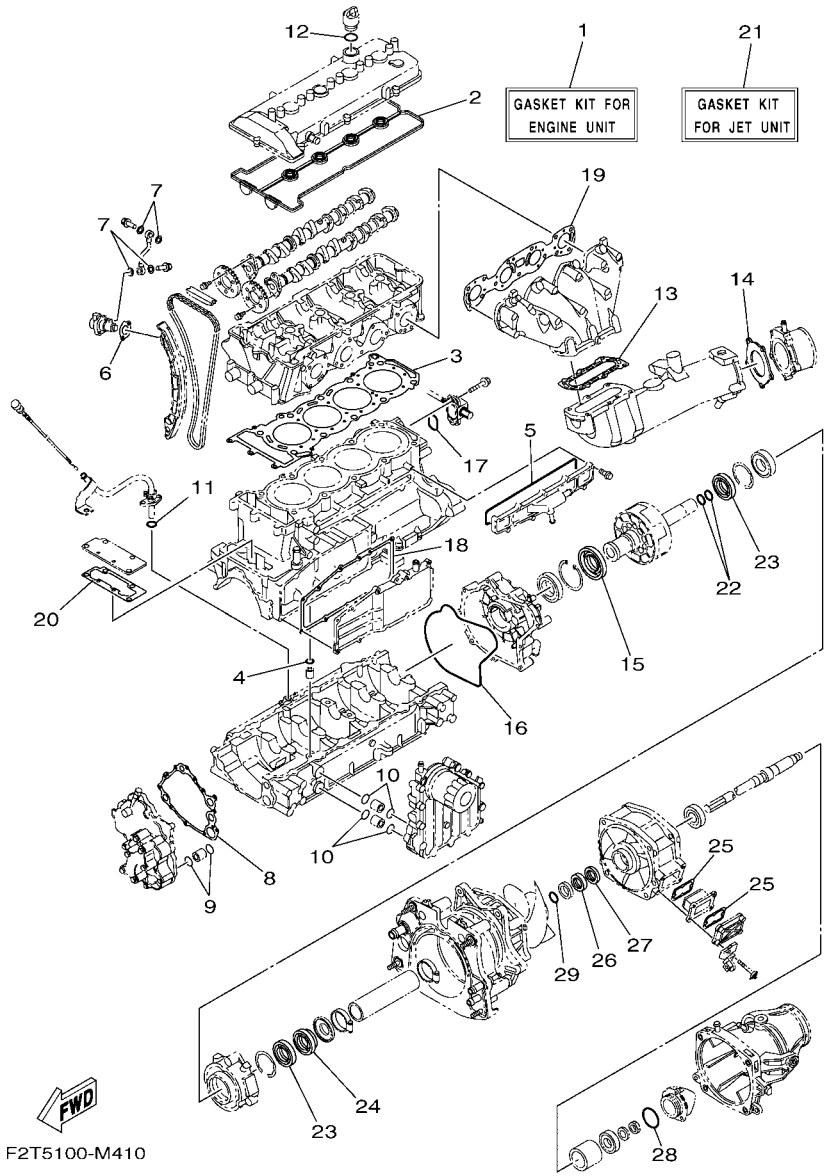

FIG. 41 REPAIR KIT 1

REF. NO.	PART NO.	DESCRIPTION	CAN	EUR				REMARKS
28	6S5–5111K–00	.O-RING 1	1	1				
29	93210–30611	.O-RING	1	1				

PART NO.	REF. NO.
6BH–11102–11	2 – 2
6BH–11119–00	2 – 14
6BH–1111E–00	2 – 12
6S5–11133–10	2 – 3
6S5–11166–10	11 – 1
6S5–11167–10	11 – 5
6BH–11181–00	2 – 11
	41 – 3
6BH–11191–20	1 – 1
6BH–11193–00	1 – 3
	41 – 2
69J–11301–10	3 – 9
6BH–1131B–00	3 – 28
	41 – 20
6BH–1131C–00	3 – 27
6S5–1131M–10–8P	3 – 17
68V–11325–02	3 – 10
67F–11328–00	3 – 11
6S5–11377–00	3 – 16
6S5–11411–00	4 – 1
6S5–11416–00	4 – 2
6S5–11416–10	4 – 2
6S5–11416–20	4 – 2
6S5–11416–30	4 – 2
6S5–11416–40	4 – 2
6S5–11459–01	4 – 14
6S5–11603–00	4 – 4
6BH–11631–00–B0	4 – 3
6S5–11633–00	4 – 5
6BH–11650–10	4 – 7
6S5–11654–10	4 – 8
6S5–11656–40	4 – 9
6S5–11656–50	4 – 9
6S5–11656–60	4 – 9
6S5–11656–70	4 – 9
6S5–12111–00	5 – 5
6S5–12113–00	5 – 8
6S5–12116–00	5 – 7
6S5–12117–00	5 – 9
3LD–12118–00	5 – 10
51Y–12119–00	5 – 11
6S5–12121–00	5 – 6
6S5–12153–00	5 – 13
3LD–12168–00	5 – 12
3LD–12168–20	5 – 12
3LD–12168–40	5 – 12
3LD–12168–60	5 – 12
3LD–12168–80	5 – 12

PART NO.	REF. NO.
3LD–12168–A0	5 – 12
3LD–12168–F0	5 – 12
3LD–12168–H1	5 – 12
3LD–12168–K1	5 – 12
3LD–12168–M1	5 – 12
3LD–12168–R1	5 – 12
3LD–12168–U1	5 – 12
3LD–12168–W1	5 – 12
3LD–12168–Y1	5 – 12
3LD–12169–11	5 – 12
3LD–12169–31	5 – 12
3LD–12169–50	5 – 12
3LD–12169–70	5 – 12
3LD–12169–90	5 – 12
3LD–12169–E0	5 – 12
3LD–12169–G0	5 – 12
3LD–12169–J0	5 – 12
3LD–12169–L0	5 – 12
6BH–12171–10	5 – 1
6D3–12176–10	5 – 3
6BH–12181–10	5 – 2
6S5–121E2–00	5 – 19
	41 – 6
6S5–12210–00	5 – 18
6S5–12228–01	2 – 7
6BH–12241–00	5 – 25
6BH–12251–00	5 – 24
6BH–12252–00	5 – 15
6BH–12279–00	5 – 16
6S5–12289–00	4 – 11
	15 – 13
6D3–12411–00	2 – 16
6BH–12413–00	2 – 17
6S5–1243E–01	13 – 9
6BH–1244H–00	13 – 20
6CS–12469–A0	3 – 21
6CS–12517–00	3 – 22
	41 – 5
6BH–12577–00	13 – 25
6S5–12578–00	2 – 19
6S5–12579–00	13 – 27
6CS–12580–00	13 – 5
60E–12581–00	13 – 4
6BH–12584–00	13 – 13
6CS–12588–00	13 – 22
6S5–12589–01	13 – 18
6S5–12858–00	10 – 2
6CS–12880–00	6 – 5

PART NO.	REF. NO.
6S5–1310A–20	9 – 1
6BH–1319K–00	3 – 34
6BH–13300–11	8 – 1
6S5–13317–10	9 – 4
6S5–13337–10	3 – 24
6S5–13405–10	9 – 2
6S5–13418–00	5 – 21
69J–13440–01	10 – 1
60E–13446–00	10 – 12
6S5–13446–10	8 – 5
6BH–13470–20	10 – 3
6S5–13477–00	9 – 3
6BH–13532–00	6 – 20
6BH–13556–00	10 – 4
8FP–13556–10	6 – 14
6BH–13557–00	3 – 18
	41 – 18
6S5–13563–00	8 – 2
	41 – 8
6BH–13641–10	6 – 2
6BH–13750–00	6 – 1
6S5–13761–10	6 – 12
6S5–13907–00	22 – 1
6BH–14126–00	6 – 4
6BH–14156–00	6 – 3
6CR–14163–00	6 – 11
68V–1416A–00	6 – 13
6S5–14285–00	6 – 17
6AN–14294–10	6 – 22
6BH–14445–00	6 – 19
6CS–14445–00	6 – 30
6CS–14446–00	6 – 7
6D3–1444B–00	6 – 15
6S5–14457–00	6 – 18
6D3–14495–00	7 – 2
	21 – 6
6CR–14536–00	6 – 10
6CR–14572–00	6 – 29
6BH–14613–00	12 – 1
	41 – 19
6BH–14711–10	12 – 2
6BH–14721–10	12 – 6
6S5–14739–00	12 – 7
	41 – 13
6BH–14749–00	12 – 14
	41 – 14
6S5–14752–00	12 – 17
6S5–1475A–00	12 – 18

PART NO.	REF. NO.
6S5–14771–00–94	12 – 11
6BH–14784–01–94	12 – 15
6CR–15100–10	3 – 1
6CS–15362–00	3 – 31
6S5–15363–00	1 – 10
6S5–15486–10	9 – 5
5EL–15511–00	19 – 6
6S5–15515–00	18 – 3
6S5–15517–00	18 – 5
6S5–15521–00	18 – 4
6S5–15590–00	18 – 1
6S5–17031–00	4 – 16
6S5–17525–01	4 – 13
6S5–17572–01	4 – 10
6BH–17586–10	4 – 15
EU0–23814–31	37 – 29
6S5–24300–01	6 – 21
70R–24489–00	32 – 4
70R–24543–00	32 – 3
6CS–26250–00	36 – 1
67F–2812A–00	20 – 23
6BH–41661–00–94	23 – 4
6BH–41662–00–94	23 – 5
66V–42414–00	14 – 9
	41 – 25
67X–44517–10	23 – 1
663–45119–00	15 – 11
6S5–45332–00–94	15 – 4
6S5–45511–00	14 – 17
6S5–45593–00–94	15 – 12
6S5–45613–10	15 – 9
6S5–45813–01–94	4 – 12
6BH–4581J–00	15 – 1
6S5–5111K–00	14 – 21
	41 – 28
68N–5112T–00	26 – 3
66V–51312–01–94	14 – 4
6S5–51315–01	14 – 7
6S5–51323–00	15 – 2
6BH–51348–01	14 – 24
6S5–52358–00	16 – 10
F2S–6134A–01	35 – 16
F1S–6134M–00	37 – 5
F2C–6134M–00	37 – 6
F1S–6134M–10	37 – 7
F1S–61355–00	37 – 22
F1W–61355–00	37 – 17
F1B–613C1–00	37 – 13

PART NO.	REF. NO.
F2S–61400–00	37 – 1
F1W–6142B–00	37 – 18
F1W–61435–00	37 – 3
F1B–61438–00	35 – 10
F1S–6143C–00	37 – 10
F2N–61460–00	35 – 13
EU0–61461–02	37 – 15
F1B–61461–02	35 – 12
GH1–61468–01	35 – 24
F1S–6146A–00	37 – 9
GU5–6146K–10	35 – 25
F1S–61481–10	35 – 9
F1W–6150A–00	35 – 5
F2S–6151M–00	37 – 19
F1B–6151S–00	35 – 11
F2S–6153A–00	35 – 1
F2S–6153E–00	35 – 2
F1W–6153J–00	35 – 4
F1S–6153R–01	37 – 14
F1K–61624–00	27 – 1
F0X–61637–00	27 – 4
EU0–61652–00	13 – 34
	26 – 8
F0X–61652–00	27 – 5
GP7–61652–00	33 – 20
F1S–61782–00	37 – 8
EW2–62142–00	32 – 2
F1G–62149–00	32 – 8
F2F–6214A–00	32 – 1
GJ3–6215F–00	22 – 17
F1B–62241–00	33 – 4
F2S–62714–00	35 – 17
F2S–6273B–00	17 – 23
F1X–62875–00	24 – 35
F1W–6358B–00	37 – 20
F2S–6411H–00	39 – 12
F2S–6514S–00	25 – 20
F1W–6514T–00	25 – 21
F1B–6517R–00	24 – 36
GA7–65772–00	34 – 4
EU0–65901–01	39 – 15
F1W–65938–00	37 – 11
F2S–65939–00	37 – 12
F1B–65986–10	39 – 14
F1W–67410–11	37 – 2
GH7–6753B–00	33 – 18
F1S–67620–00	33 – 22
F1W–6773D–00	37 – 4

PART NO.	REF. NO.
F2S–67743–00	32 – 36
	32 – 37
F1B–67747–00	32 – 15
EU0–67767–31	32 – 27
EW2–67821–00	34 – 3
F2N–67823–10	24 – 9
F2S–68090–00	22 – 21
F2S–6820A–10	22 – 19
GA7–68218–00	33 – 8
F0D–6822E–00	35 – 32
GU2–6822E–01	35 – 33
6S5–682E0–00	22 – 2
F1W–68303–00	37 – 21
F2S–68310–00	36 – 8
FK7–68312–02	36 – 11
FK7–68313–02	36 – 12
F2T–68322–00	22 – 22
F1S–68341–00	37 – 23
EW2–68348–00	36 – 9
6S5–81167–10	18 – 13
	41 – 15
6S5–81168–00	18 – 17
	41 – 16
6S5–81315–00	21 – 21
6S5–81328–00	18 – 18
66V–8132W–00	20 – 21
6S5–81337–20	18 – 11
6S5–81364–10	18 – 24
6S5–81410–10	18 – 7
6S5–81450–01	18 – 6
6S5–81800–00	19 – 1
6S5–81810–00	19 – 13
6S5–81820–00	19 – 12
6S5–81826–00	19 – 10
6S5–81830–00	19 – 3
6S5–81840–00	19 – 8
11H–81844–00	19 – 2
4G0–81844–00	19 – 4
66V–81844–00	20 – 22
5EL–81845–00	19 – 11
6BH–81845–00	20 – 2
3TB–81847–00	19 – 9
6BH–81847–00	20 – 24
1J7–81847–60	19 – 5
5A8–81850–10	19 – 14
6B6–81940–00	20 – 20
6S5–81942–10	20 – 3
60E–81950–00	20 – 18

PART NO.	REF. NO.
68V–81950–00	20 – 19
6S5–81960–10	21 – 1
6S5–81972–01–94	21 – 3
6S5–81975–00	21 – 2
6S5–82115–00	20 – 10
6S5–82116–00	22 – 29
6S5–82117–00	20 – 11
67F–82151–00	20 – 13
67F–82151–10	20 – 14
67F–82151–30	20 – 15
	20 – 31
67F–82151–40	20 – 16
	20 – 17
6D3–82157–00	20 – 12
67F–8215B–00	20 – 32
6BH–82170–00	20 – 9
6S5–82310–00	21 – 9
61N–82317–00	1 – 7
6A0–82317–00	20 – 7
6BH–82380–00	6 – 9
68V–82504–00	21 – 20
60E–82556–00	22 – 3
6CR–82560–00	21 – 15
1UA–82591–00	25 – 22
4B5–82599–00	20 – 29
6S5–8259E–00	20 – 26
6CR–8259L–10	20 – 28
6CS–8273J–00	21 – 22
60E–83627–00	20 – 4
682–84385–01	13 – 8
6CS–85516–00	3 – 35
6CS–8572F–00	3 – 33
61A–85790–00	21 – 13
6AA–85790–00	21 – 26
65L–85886–00	6 – 16
60E–85896–00	21 – 18
6CR–8591A–10	20 – 5
6B6–86261–00	22 – 30
6B6–86261–10	22 – 30
6B6–86265–00	22 – 31
6B6–86265–10	22 – 31
6BH–E110M–00	1 – 4
6S5–E118E–00	1 – 6
6S5–E1328–00	1 – 5
67X–E2590–10	13 – 33
6S5–E4410–01	7 – 6
6BH–E4419–00	7 – 12
6S5–E4436–00	7 – 8

PART NO.	REF. NO.
6S5–E4451–00	7 – 7
6S5–G2717–00	7 – 9
6BH–G4532–00	23 – 2
6BH–G4574–00	23 – 3
6AN–G5214–00	14 – 10
6CS–G5538–00	14 – 13
6CS–G5831–00	14 – 1
6AN–G6882–00	14 – 8
6BH–R1142–10	7 – 13
6AN–R1190–00	14 – 37
6S5–R1313–01	14 – 34
6S5–R1314–02	16 – 3
6BH–R1318–01	14 – 26
6BH–R1321–01	14 – 23
6AN–R1326–00	14 – 20
6CS–R1333–00	17 – 1
6CS–R1341–00	16 – 1
6AN–R1341–01	17 – 2
6S5–R1381–01	15 – 17
F2C–U1314–00	27 – 15
F2S–U1355–00	23 – 8
F2S–U13C1–00	24 – 18
	25 – 8
	25 – 12
	25 – 46
	31 – 31
	31 – 32
	38 – 5
F2S–U142D–00	38 – 2
F2S–U142E–00	38 – 4
F2N–U142L–00	22 – 10
	24 – 11
	24 – 22
	24 – 27
	24 – 31
	24 – 33
	28 – 3
	28 – 12
	28 – 15
	28 – 18
	34 – 20
	34 – 26
	35 – 19
	35 – 26
	35 – 28
F2S–U1438–00	35 – 22
F2S–U143D–00	38 – 1
F2S–U143E–00	38 – 3

PART NO.	REF. NO.
F2S–U143L–00	38 – 7
F0V–U1461–00	35 – 21
EU0–U1461–02	16 – 13
F2S–U1467–10	35 – 27
GH3–U146E–00	14 – 38
F1W–U146G–00	35 – 29
F2S–U146G–10	35 – 30
F2S–U149C–01	35 – 20
F2S–U1516–00	36 – 7
F2C–U151S–00	17 – 5
F2S–U151S–00	35 – 23
F2S–U1552–00	36 – 2
F1X–U1554–00	37 – 27
F2S–U155C–02	36 – 4
F2S–U155D–02	36 – 3
F2N–U1628–02	31 – 1
F1B–U1629–00	31 – 16
F1B–U1653–02	31 – 4
F2S–U1708–02	24 – 7
F2N–U2127–00	29 – 3
F2N–U213G–01	29 – 5
F1W–U2159–00	32 – 6
F2S–U2187–00	29 – 1
F2S–U2188–00	29 – 2
F1W–U224E–00	33 – 1
F1S–U2280–00	26 – 19
F2S–U2284–00	31 – 26
F1S–U2285–00	26 – 20
F2S–U2511–00	28 – 1
F2S–U2512–00	28 – 4
F2S–U2519–01	28 – 5
F2S–U251D–01	28 – 13
F2S–U251E–01	28 – 16
F2S–U252E–03	28 – 8
F2S–U252F–03	28 – 10
F2S–U2624–00	31 – 24
F2S–U264L–01	31 – 33
F2S–U2663–00	25 – 5
F1W–U2664–01	30 – 3
F1K–U266B–00	25 – 38
	25 – 42
F2S–U266B–00	25 – 6
F2N–U266C–01	25 – 14
F2C–U266D–01	30 – 8
F2C–U266E–00	30 – 27
F1W–U269B–00	26 – 7
F2S–U270B–02	31 – 5
F2S–U271F–01	31 – 23

PART NO.	REF. NO.
F2C–U2733–00	34 – 12
F2S–U278A–00	27 – 12
F2S–U278F–00	27 – 16
F2S–U278H–00	27 – 17
F2S–U316C–00	24 – 42
F2S–U351H–00	28 – 21
F2S–U351J–00	28 – 22
F2S–U351K–00	28 – 23
F2S–U351M–00	28 – 24
F2S–U351N–00	28 – 25
F2S–U3581–01	28 – 20
F2S–U370J–00	24 – 30
F2S–U370K–00	24 – 32
F2S–U371A–20	30 – 1
F2S–U371B–20	30 – 2
F2S–U372A–20	30 – 6
F2S–U372B–20	30 – 7
F2S–U375E–00	30 – 16
F1W–U3768–01	25 – 3
	31 – 21
GH1–U3774–00	30 – 12
	31 – 6
F2S–U377B–02–P2	24 – 19
F2S–U377C–02–P2	24 – 24
F2C–U377H–00	27 – 14
F2C–U378C–00	30 – 18
F2S–U3844–00	24 – 6
F2C–U3850–00	30 – 4
	30 – 9
F2S–U4114–00	39 – 11
F2S–U4116–00	39 – 10
F1W–U4121–00	39 – 13
F1X–U413P–02	40 – 12
F1S–U415B–11	40 – 5
GP8–U416H–01	40 – 13
F2T–U417B–30	39 – 1
F2T–U417C–30	39 – 2
F2T–U417D–30	39 – 3
F2T–U417E–30	39 – 4
F2T–U417F–30	39 – 5
F2T–U417G–30	39 – 6
F2T–U417H–30	39 – 7
F2T–U417J–30	39 – 8
F2T–U417M–10	39 – 9
F1G–U418F–00	40 – 9
F1S–U419E–01	40 – 11
F2S–U41B1–10	40 – 1
F1B–U41B1–21	40 – 2

PART NO.	REF. NO.
F1B–U41B1–31	40 – 3
F1B–U41B2–01	40 – 4
F0V–U41D5–31	40 – 6
F0V–U41DB–12	40 – 7
F1S–U41E1–11	40 – 10
F1B–U41F5–21	40 – 8
F2C–U4256–00	33 – 24
F2N–U4261–00	34 – 14
F2S–U475B–00	25 – 13
F2S–U475F–00	25 – 16
F1W–U491K–00	28 – 2
	28 – 9
	28 – 11
	28 – 14
	28 – 17
GP7–U4953–10	31 – 3
	31 – 14
	31 – 15
F2S–U510D–01	25 – 45
F2S–U5135–00	25 – 4
F2S–U513M–01–P2	25 – 35
F1W–U5148–00	25 – 9
F0X–U515E–01	24 – 5
F2S–U515N–01–P2	25 – 11
F2S–U5162–00	37 – 31
F2S–U517B–01–P2	25 – 1
F2S–U517C–01	25 – 32
F2S–U517D–00	25 – 19
F1X–U517E–01	24 – 4
	24 – 15
	24 – 21
	24 – 26
F2S–U517F–00	24 – 14
F2S–U517H–00	24 – 34
F2S–U518E–00	25 – 26
F2S–U518M–01–P2	31 – 22
F2S–U519D–00	24 – 37
F2S–U519D–10	31 – 25
F2S–U519G–02	25 – 2
F2S–U5554–02	24 – 1
F2S–U5633–00	24 – 45
F1K–U5772–04	24 – 50
	32 – 34
F2S–U590D–31	25 – 37
F2S–U590E–31	25 – 41
F2S–U591A–00	24 – 38
F2C–U591A–02	30 – 24
F2C–U591C–00	30 – 25

PART NO.	REF. NO.
F1W–U591C–01	24 – 39
F1W–U591D–00	24 – 40
F2C–U591D–01	30 – 26
F1K–U5983–01	24 – 48
GD0–U7249–00–05	15 – 19
F1W–U725E–00	37 – 26
F1S–U725E–01	17 – 20
F2S–U72C0–01	17 – 3
6CS–U72M2–00	14 – 27
F2M–U732B–00	23 – 16
F2S–U732B–00	23 – 12
F2S–U732B–10	23 – 14
EU0–U7354–00–01	23 – 9
EU0–U7354–00–03	23 – 9
EU0–U7354–00–05	23 – 9
EU0–U7354–00–10	23 – 9
EU0–U7354–00–20	23 – 9
F1B–U751G–00	34 – 25
F2S–U7525–00	13 – 35
F1S–U7525–01	33 – 2
F2C–U753B–01	34 – 10
F2S–U753C–00	34 – 15
F1W–U7550–01	34 – 1
F2S–U7555–00	34 – 6
F2C–U7557–01	17 – 30
F2C–U755G–00	34 – 19
F2C–U7564–00	34 – 11
GJ1–U7578–11	35 – 3
	35 – 35
F1S–U757B–01	34 – 24
F2S–U757E–02	17 – 35
F2S–U757F–01	17 – 36
F2N–U758D–00	34 – 18
F2S–U759B–00	32 – 38
F1K–U759C–00	24 – 43
	24 – 47
	32 – 40
	32 – 41
	34 – 16
GJ1–U759C–00	24 – 46
F1W–U759C–01	32 – 39
F1B–U761D–02	26 – 10
F1B–U7626–00	33 – 10
F1B–U7628–00	33 – 15
F2S–U7629–00	33 – 13
F1B–U7656–00	33 – 9
F1B–U7698–01	33 – 6
F2S–U7711–01	32 – 13

PART NO.	REF. NO.
F1W–U771H–00	27 – 13
F1B–U7773–00	32 – 14
F2N–U7831–10	32 – 17
GP7–U7832–01	32 – 18
GP7–U7833–11	32 – 19
GP7–U7834–10	32 – 22
GP7–U7835–00	32 – 20
F2S–U7835–01	24 – 41
GP7–U783F–00	32 – 24
F2S–U7844–00	32 – 25
F0D–U7856–10	32 – 33
F0D–U785G–10	22 – 15
	32 – 31
F2H–U785H–00	32 – 28
F2N–U8169–00	27 – 11
F2S–U8211–00	22 – 8
EU0–U8217–H2	22 – 4
EU0–U821D–00	22 – 14
F1K–U8221–00	22 – 13
F1S–U8221–00	22 – 11
	34 – 2
	34 – 17
EU0–U8221–30	22 – 12
F1X–U822E–00	22 – 23
F2S–U8244–00	30 – 17
F2S–U8262–01–P0	24 – 17
F1W–U826C–00	22 – 25
F1K–U826C–03	26 – 25
F1X–U828E–01	24 – 2
F1S–U828H–01	26 – 15
F2P–U828K–00	24 – 49
F1W–U828M–00	17 – 8
	17 – 14
	17 – 17
	26 – 16
	29 – 7
	32 – 9
	33 – 23
	34 – 21
F1B–U8360–01	33 – 5
F1W–U8376–00	22 – 27
F1G–U8571–02	17 – 28
F1B–U8572–01	17 – 25
F1W–U8572–01	26 – 24
F2S–U8577–00	17 – 26
F2S–U8592–00	22 – 5
F2S–U8593–00	22 – 6
F2S–U883B–00	15 – 20

PART NO.	REF. NO.
F2S–U883E–00	15 – 21
F2S–U883N–01	27 – 7
F2S–U883P–01	27 – 8
F2S–U883T–00	27 – 9
F2S–U890L–04	30 – 11
F2S–U890M–03	31 – 29
F2S–U890N–03	31 – 30
F2S–U89A1–01–P2	31 – 17
F1S–U8K31–02	17 – 4
6CR–W0001–01	41 – 1
6S5–W0001–22	41 – 21
6BH–W009A–02–94	2 – 1
6CR–W009B–10–94	3 – 4
90105–06028	1 – 2
90105–06035	2 – 18
90105–06184	10 – 6
90105–06185	10 – 7
90105–06903	21 – 10
90105–06M07	3 – 12
90105–07004	5 – 4
90105–07009	2 – 6
90105–08021	3 – 39
90105–08054	10 – 9
90105–08169	10 – 10
90105–08170	10 – 11
90105–08243	6 – 6
90105–08249	18 – 15
90105–08860	27 – 10
90105–10071	3 – 5
90109–06218	25 – 23
	25 – 30
90109–06233	35 – 6
90109–06268	3 – 38
90109–06832	15 – 22
90109–06874	23 – 10
90109–06875	23 – 11
90109–08041	17 – 34
90110–06040	27 – 6
90110–06182	3 – 25
90110–06382	36 – 5
90110–06822	14 – 22
90110–08212	18 – 2
90116–08032	6 – 27
90119–05803	24 – 13
90119–059U4	25 – 33
90119–06048	21 – 5
90119–06091	20 – 25
90119–06827	17 – 38

PART NO.	REF. NO.
90119–06832	22 – 9
90119–06858	24 – 12
	24 – 29
	25 – 40
	25 – 44
90119–06880	24 – 10
	24 – 16
	24 – 20
	24 – 23
	24 – 25
	24 – 28
90119–06891	15 – 16
	16 – 2
90119–06893	14 – 5
90119–06895	25 – 25
90119–06897	14 – 11
90119–069UH	25 – 27
90119–069UP	30 – 5
	30 – 10
90119–069UX	16 – 6
90119–06M35	20 – 6
90119–06MA3	21 – 4
	21 – 24
90119–08034	12 – 4
	12 – 10
90119–08096	12 – 12
90119–08097	12 – 5
	12 – 9
90119–08823	17 – 24
	17 – 27
	17 – 29
90119–08828	30 – 21
90119–08829	31 – 10
90119–08832	31 – 18
90119–08840	16 – 4
90119–08851	14 – 35
	14 – 41
90119–08859	23 – 7
90119–08861	27 – 18
90119–089U7	17 – 31
90119–089UL	25 – 39
	25 – 43
90119–089UT	20 – 1
90119–089UU	15 – 18
	37 – 30
90119–08M22	7 – 3
	21 – 7
90119–10029	12 – 13

PART NO.	REF. NO.
90119–10806	14 – 33
90119–10810	14 – 3
90149–06229	18 – 8
90149–10052	23 – 6
90150–05807	17 – 6
90154–06017	35 – 18
	38 – 6
90154–06030	38 – 8
90169–049U1	32 – 21
90170–20802	14 – 19
90176–08080	6 – 28
90183–06902	25 – 7
90201–052E8	18 – 21
90201–06028	9 – 8
90201–06801	16 – 8
	16 – 11
90201–068G0	36 – 6
90201–068M4	14 – 39
90201–06906	35 – 14
90201–099U3	30 – 19
	35 – 7
90201–10801	17 – 21
90201–109U6	30 – 13
	31 – 7
90201–12039	2 – 8
90202–08002	35 – 8
90267–329UR	32 – 23
90267–409U3	31 – 34
90267–48020	25 – 28
90267–48802	26 – 17
	34 – 23
90267–48806	29 – 4
90267–48807	24 – 44
	25 – 10
90267–48825	28 – 19
90267–489U1	22 – 7
	22 – 26
	22 – 28
	24 – 51
	26 – 26
	32 – 35
	34 – 5
90267–489U2	23 – 13
	23 – 15
	23 – 17
	32 – 5
90267–489U6	17 – 11
	17 – 12

PART NO.	REF. NO.
90267–489U6	17 – 15
	17 – 18
	25 – 36
	29 – 8
	32 – 7
	32 – 11
	33 – 25
	37 – 28
90267–489U8	26 – 12
	28 – 6
90267–489UP	33 – 7
90269–08801	25 – 17
	25 – 18
90280–03047	18 – 10
90387–06080	17 – 37
90387–06119	1 – 8
	20 – 8
90387–06M05	18 – 22
90387–06M30	16 – 7
90387–06M60	15 – 15
90387–08M06	14 – 36
	14 – 42
90387–08M30	16 – 5
90401–10040	5 – 23
90430–06232	10 – 8
90430–06M03	3 – 13
90430–08209	9 – 10
90430–10007	5 – 22
	41 – 7
90430–12002	17 – 32
90430–16910	33 – 19
90445–14804	14 – 30
90445–16013	13 – 31
90445–18012	13 – 14
90445–20800	26 – 4
90445–20804	26 – 1
90445–21806	13 – 1
90446–27M55	26 – 5
90446–27M73	26 – 2
90447–19005	13 – 15
90447–19011	13 – 28
90447–19015	14 – 28
90447–19017	6 – 23
90447–19018	13 – 23
90447–19801	13 – 7
90447–22011	13 – 10
90447–22015	11 – 2
90447–22016	11 – 6

PART NO.	REF. NO.
90447–22801	13 – 2
90447–28004	33 – 12
	33 – 16
90447–28008	2 – 20
90450–17M17	6 – 24
90450–90002	7 – 4
	7 – 5
90450–99015	12 – 20
90450–99016	12 – 19
90450–99801	34 – 8
90450–99804	34 – 9
90464–17800	32 – 12
90464–20008	21 – 25
90464–31001	21 – 27
90464–31002	21 – 28
90464–32801	17 – 7
	17 – 9
	17 – 16
	17 – 19
	22 – 20
	22 – 24
	26 – 18
	26 – 29
	32 – 10
	34 – 22
90464–35132	13 – 17
90464–40825	7 – 14
90464–99801	17 – 13
90464–99804	29 – 6
90465–11829	22 – 18
	32 – 29
	32 – 30
	32 – 32
	35 – 31
90465–13M18	20 – 30
	21 – 12
90465–14M66	20 – 33
90467–089U1	22 – 16
90467–14803	14 – 31
	33 – 14
	33 – 21
90467–150A1	3 – 36
	13 – 21
90467–150A5	13 – 6
90467–160A0	13 – 16
	13 – 24
	13 – 26
	13 – 29

PART NO.	REF. NO.
90467–160A0	13 – 32
90467–170A5	13 – 30
90467–17802	34 – 13
90467–18804	26 – 6
90467–190A0	11 – 3
	11 – 4
90467–200A0	26 – 14
90467–200A3	11 – 8
	13 – 3
	13 – 11
	13 – 12
	13 – 19
90467–21800	26 – 11
90467–240A0	2 – 21
	11 – 7
90467–25801	33 – 11
90467–26800	33 – 3
	33 – 17
	33 – 26
90480–19800	24 – 3
90480–20132	21 – 29
90480–22801	7 – 11
90480–22M15	7 – 1
	21 – 8
90601–118UF	14 – 29
	26 – 9
90601–152U3	15 – 23
90601–155U4	32 – 26
90601–170UG	34 – 7
90601–200U1	26 – 13
	35 – 34
90605–502U1	25 – 15
90605–502U2	24 – 8
91314–06020	8 – 4
91314–06060	9 – 7
91317–05010	18 – 20
91317–06014	18 – 19
91380–06016	21 – 19
91380–06020	18 – 23
91380–06025	5 – 20
91809–16002	2 – 4
	2 – 5
92014–06012	2 – 13
92903–06600	2 – 10
92903–08600	6 – 26
	19 – 16
9290P–20600	14 – 18
92990–06100	19 – 17

PART NO.	REF. NO.
92990–10600	21 – 14
92990–12200	17 – 33
	27 – 3
92995–06600	21 – 17
92995–08600	3 – 15
9299R–05200	17 – 10
	26 – 22
	28 – 7
9299R–08200	26 – 28
	30 – 23
	31 – 12
	31 – 20
	31 – 28
9299R–10200	30 – 14
	31 – 8
93101–31001	14 – 16
	41 – 27
93102–29008	15 – 5
	41 – 23
93102–29009	15 – 8
	41 – 24
93102–31009	14 – 15
	41 – 26
93210–06632	3 – 32
93210–11453	3 – 3
	41 – 4
93210–12016	3 – 37
	41 – 11
93210–18322	10 – 13
	41 – 10
93210–21631	8 – 6
	41 – 9
93210–22MF1	15 – 3
	41 – 22
93210–24M79	1 – 11
	41 – 12
93210–30611	14 – 25
	41 – 29
93210–32172	21 – 23
	41 – 17
93306–00805	18 – 12
93306–20654	14 – 12
93306–20655	15 – 7
93306–30537	14 – 14
93410–12003	19 – 7
93450–24028	4 – 6
93450–66156	15 – 6
93604–10M03	3 – 8

PART NO.	REF. NO.
93604–10M03	10 – 5
93606–12019	3 – 7
	8 – 3
	12 – 8
	14 – 6
	14 – 32
	15 – 14
93608–16M16	12 – 3
93700–06M03	15 – 10
94591–66152	5 – 14
94702–00427	21 – 11
95023–06012	6 – 31
95024–06014	3 – 19
95024–06020	3 – 20
	9 – 12
95024–06035	9 – 11
95024–08035	12 – 16
95380–06700	19 – 18
9538R–06600	16 – 9
	16 – 12
9538R–06700	14 – 40
	35 – 15
95720–06300	25 – 24
	37 – 16
9572R–05300	26 – 23
9572R–06300	25 – 29
	25 – 31
	32 – 16
9572R–08300	26 – 27
	30 – 20
	30 – 22
	31 – 2
	31 – 11
	31 – 13
	31 – 19
	31 – 27
	37 – 25
9572R–10300	17 – 22
	30 – 15
	31 – 9
95814–06016	3 – 30
95814–06030	5 – 17
95814–06035	3 – 23
95814–06070	3 – 6
95814–08020	3 – 29
	9 – 9
95817–06014	9 – 6
95824–06025	1 – 9

PART NO.	REF. NO.
97013–06055	2 – 9
97013–08030	19 – 15
97013–08035	6 – 25
97080–08035	37 – 24
97095–06016	21 – 16
97095–08040	3 – 14
97513–05514	18 – 9
97513–08525	6 – 8
97513–10525	2 – 15
97780–30610	36 – 10
97780–60516	7 – 10
97780–60520	20 – 27
9778R–50010	25 – 34
9788R–05025	26 – 21
98580–05030	36 – 13
99009–72500	18 – 14
99530–10114	3 – 2
	3 – 26
	18 – 16
99590–14016	14 – 2
99780–12600	27 – 2

PART NO.	REF. NO.

PART NO.	REF. NO.