YAMAHA

# PARTS CATALOGUE

## *WaveRunner FZS*

# GX1800A-N (F3K1/6EVA/6EV1)
# GX1800A-N (F3K2/6EVB/6EV1)
# GX1800A-N (F3K3/6EVC/6EV1)

1NF3K-100E1

(  )

YAMAHA GENUINE Parts & Accessories

2020/12/16

| NEWS NO. | DATE | COMMENT |
|---|---|---|
| PE0-WV-140002 | July,24,2014 | COR:GX1800(A)(F3K*/F3L*)FIG.30 SEAT & UNDER LOCKER LIST/ILLUST. CORRECTION |
| PE0-WV-200001 | Oct.,21,2020 | COR:F3J,F3K,F3L,F3P,F3X,F4B JET UNIT 1 LIST CORRECTION |

GX1800A-N
PARTS CATALOGUE
©2013 by Yamaha Motor Co., Ltd.
1st edition, December 2013
All rights reserved.
Any reprinting or unauthorized use
without the written permission of
Yamaha Motor Co., Ltd.
is expressly prohibited.
Printed in Japan.

# FOREWORD

This Parts Catalogue is related to the parts for the model(s) on the cover page. When you are ordering replacement parts, please refer to this Parts Catalogue and quote both part numbers and part names correctly.

1. Modifications or additions which have been made after the issue of the Parts Catalogue will be announced in the Parts News.
   It is advisable that you make the necessary corrections to the Parts Catalogue according to the Parts News.

2. Abbreviations
   The following abbreviations are used in this Parts Catalogue.

   “UR” Use specified parts number.
   “UN” Use as many as needed.
   “AP” Alternate Parts
   “LM” Locally Made (Parts need to be ordered locally)
   “F#” Frame No. (Applicable machine No.)
   “O/S” Over Size

3. The number of components for assembly
   - Parts, which are to be supplied in an assembly, are listed with a dot (.) in front of the part name as shown below.
   - The numeral appearing to the right of each component part indicates the quantity of parts for each assembly unit.

| PART NO. | DESCRIPTION | Q’TY | REMARKS |
|---|---|---|---|
| 2F5–83310–60 | FRONT FLASHER LIGHT ASSY | 2 | |
| 115–83311–60 | .BULB (6V–18W) | 1 | |

4. Applicable colours of graphics are represented in the “REMARKS” as shown below.

| PART NO. | DESCRIPTION | Q’TY | REMARKS |
|---|---|---|---|
| 2N4–24110–00–X5 | FUEL TANK COMP. | 2 | MXR |
| 3J1–24240–10 | .GRAPHIC, FUEL TANK | 1 | FOR MXR |

5. Note that the illustrations for reference in finding parts numbers are not to be used for assembling. When assembling, please use the applicable service manual.

6. The asterisk (*) before a reference number indicates modified items after the first edition.

7. Applicable Serial No.

Engine Serial No.

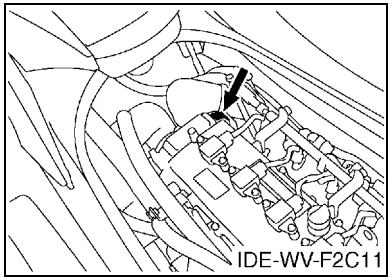


Primary Identification No.

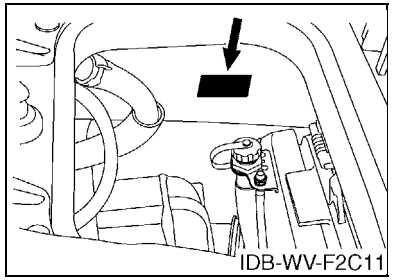


8. Applicable Colour Code (The (*) mark shows Model colour.)

| Abbreviation | Colour Name | Colour Code |
|---|---|---|
| BMG(*) | BLACK METALLIC G | 1050 |
| RYM4(*) | REDDISH YELLOW METALLIC 4 | 1190 |
| | | |
| | | |
| | | |
| | | |
| | | |
| | | |
| | | |
| | | |

9. Quantity Column Information

| Column No. | Name Of Q'ty Column | Destination |
|---|---|---|
| 1 | CAN | CANADA |
| 2 | EUR | EUROPE |
| 3 | GENE | EXCEPT CANADA, EUROPE |
| | | |
| | | |

10. Applicable Starting Serial No.

Engine Serial No.

| Serial No. | Name Of Q'ty Column | Model Code |
|---|---|---|
| 6EV-1000001 | CAN | 6EVA |
| 6EV-1000001 | EUR | 6EVC |
| 6EV-1000001 | GENE | 6EVB |
| | | |
| | | |

Primary Identification No.

| Serial No. | Name Of Q'ty Column | Model Code |
|---|---|---|
| F3K-800101 | CAN | F3K1 |
| F3K-800101 | EUR | F3K3 |
| F3K-800101 | GENE | F3K2 |
| | | |
| | | |

# CONTENTS

CYLINDER 1 ..... 1
CYLINDER 2 ..... 2
CRANKCASE ..... 3
CRANKSHAFT & PISTON ..... 5
VALVE ..... 7
INTAKE 1 ..... 9
INTAKE 2 ..... 11
INTAKE 3 ..... 12
OIL PUMP ..... 13
OIL PAN ..... 14
OIL COOLER ..... 15
BREATHER OIL ..... 16
EXHAUST 1 ..... 17
EXHAUST 2 ..... 18
JET UNIT 1 ..... 20
JET UNIT 2 ..... 22
JET UNIT 3 ..... 23
JET UNIT 4 ..... 24
GENERATOR ..... 26
STARTING MOTOR ..... 27
ELECTRICAL 1 ..... 28
ELECTRICAL 2 ..... 30
ELECTRICAL 3 ..... 32
ENGINE MOUNT ..... 33
ENGINE HATCH 1 ..... 34
ENGINE HATCH 2 ..... 37
HULL & DECK ..... 39
GUNWALE & MAT ..... 41
VENTILATION ..... 43
SEAT & UNDER LOCKER ..... 44
FUEL TANK ..... 46
BILGE PUMP ..... 48
EXHAUST 3 ..... 49
CONTROL CABLE ..... 50
STEERING 1 ..... 52
STEERING 2 ..... 54
GRAPHICS ..... 55
IMPORTANT LABELS ..... 56
REPAIR KIT 1 ..... 57

## INDEX

NUMERICAL INDEX ..... 59

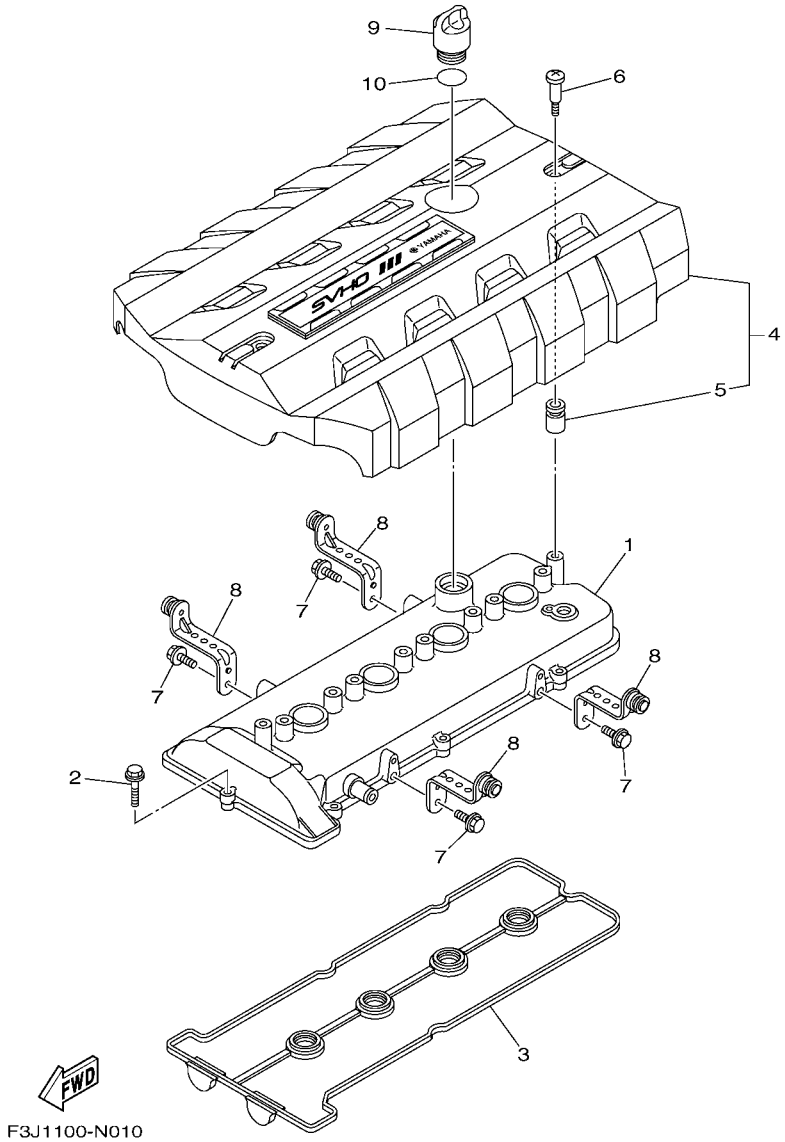


## FIG. 1 CYLINDER 1

| REF. NO. | PART NO. | DESCRIPTION | CAN | EUR | GENE | | | REMARKS |
|---|---|---|---|---|---|---|---|---|
| 1 | 6S5–11191–20 | COVER, CYLINDER HEAD 1 | 1 | 1 | 1 | | | |
| 2 | 90105–06028 | BOLT, FLANGE | 8 | 8 | 8 | | | |
| 3 | 6BH–11193–00 | GASKET, HEAD COVER 1 | 1 | 1 | 1 | | | |
| 4 | 6ET–E110M–00 | COVER ASSY 1 | 1 | 1 | 1 | | | |
| 5 | 6S5–E1328–00 | .GROMMET, ANODE | 2 | 2 | 2 | | | |
| 6 | 6S5–E118E–00 | BOLT, COVER MOUNTING | 2 | 2 | 2 | | | |
| 7 | 95814–06012 | BOLT, FLANGE | 4 | 4 | 4 | | | |
| 8 | 6S5–11941–10 | STAY | 4 | 4 | 4 | | | |
| 9 | 6S5–15363–00 | PLUG, OIL | 1 | 1 | 1 | | | |
| 10 | 93210–24M79 | O-RING | 1 | 1 | 1 | | | |

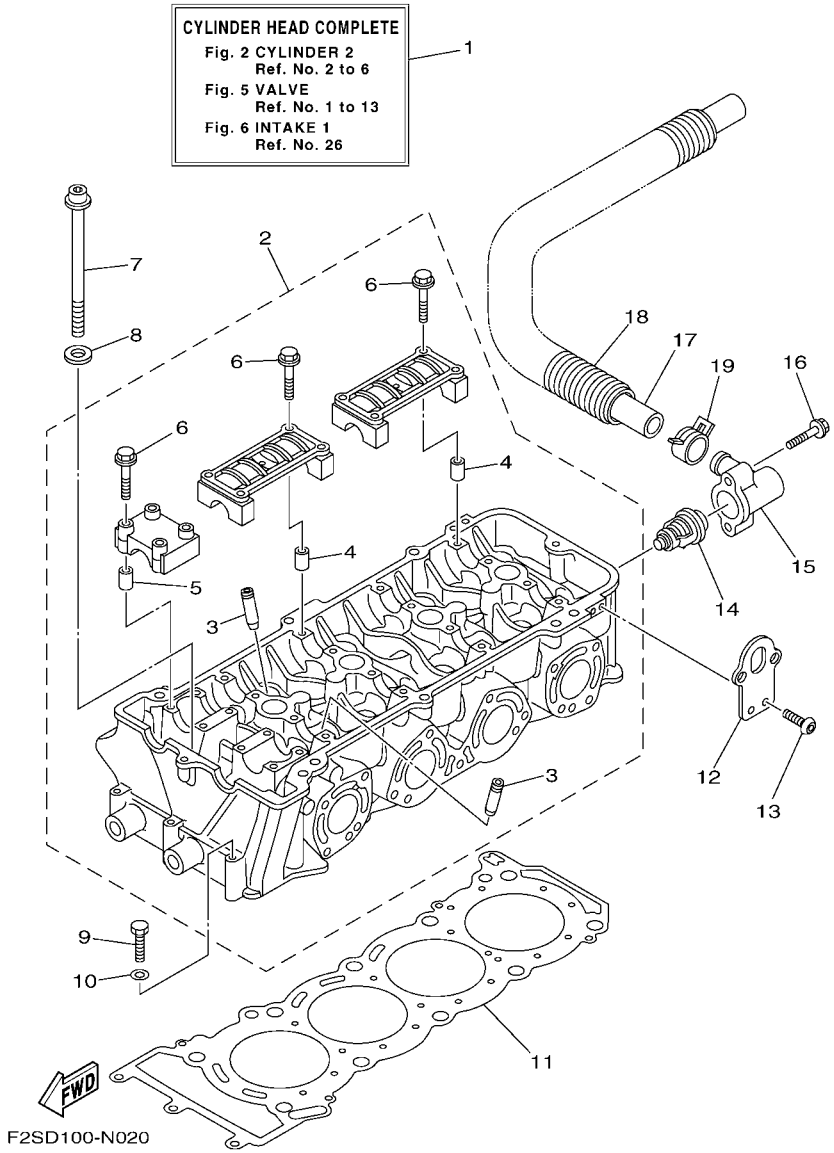


## FIG. 2 CYLINDER 2

| REF. NO. | PART NO. | DESCRIPTION | CAN | EUR | GENE | | | REMARKS |
|---|---|---|---|---|---|---|---|---|
| 1 | 6ET–W009A–00–94 | CYLINDER HEAD COMPLETE | 1 | 1 | 1 | | | |
| 2 | 6S5–11102–11 | CYLINDER HEAD ASSY | 1 | 1 | 1 | | | |
| 3 | 6S5–11133–10 | .GUIDE, VALVE 1 | 16 | 16 | 16 | | | |
| 4 | 91809–16002 | .PIN, DOWEL | 8 | 8 | 8 | | | |
| 5 | 91809–16002 | .PIN, DOWEL | 4 | 4 | 4 | | | |
| 6 | 90105–07009 | .BOLT, FLANGE | 24 | 24 | 24 | | | |
| 7 | 6S5–12228–01 | BOLT | 10 | 10 | 10 | | | |
| 8 | 90201–12039 | WASHER, PLATE | 10 | 10 | 10 | | | |
| 9 | 97013–06055 | BOLT | 3 | 3 | 3 | | | |
| 10 | 92903–06600 | WASHER, PLATE | 3 | 3 | 3 | | | |
| 11 | 6BH–11181–00 | GASKET, CYLINDER HEAD 1 | 1 | 1 | 1 | | | |
| 12 | 6BH–1111E–00 | HANGER, ENGINE 2 | 2 | 2 | 2 | | | |
| 13 | 92014–06012 | BOLT, BUTTON HEAD | 4 | 4 | 4 | | | |
| 14 | 6D3–12411–00 | THERMOSTAT | 1 | 1 | 1 | | | |
| 15 | 6BH–12413–00 | COVER, THERMOSTAT | 1 | 1 | 1 | | | |
| 16 | 90105–06035 | BOLT, FLANGE | 2 | 2 | 2 | | | |
| 17 | 6S5–12578–00 | HOSE 3 | 1 | 1 | 1 | | | |
| 18 | 90447–28008 | TUBE (L850) | 1 | 1 | 1 | | | |
| 19 | 90467–240A0 | CLIP | 1 | 1 | 1 | | | |

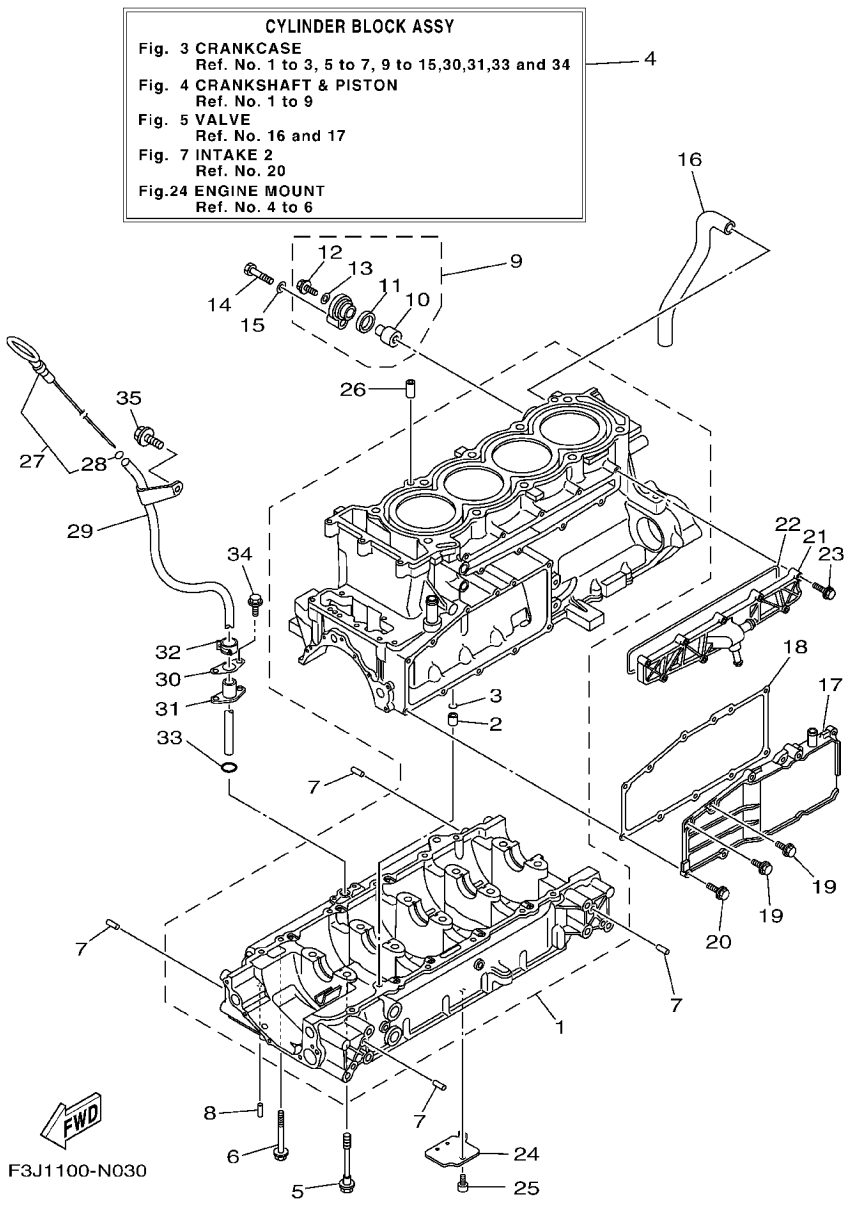


## FIG. 3 CRANKCASE

| REF. NO. | PART NO. | DESCRIPTION | CAN | EUR | GENE | | | REMARKS |
|---|---|---|---|---|---|---|---|---|
| 1 | 6CS–15100–11 | CRANKCASE ASSY | 1 | 1 | 1 | | | |
| 2 | 99530–10114 | .PIN, DOWEL | 1 | 1 | 1 | | | |
| 3 | 93210–11453 | .O-RING | 1 | 1 | 1 | | | |
| 4 | 6ET–W009B–00–94 | CYLINDER BLOCK ASSY | 1 | 1 | 1 | | | |
| 5 | 90105–10071 | BOLT, FLANGE | 10 | 10 | 10 | | | |
| 6 | 95814–06070 | BOLT, FLANGE | 12 | 12 | 12 | | | |
| 7 | 93606–12019 | PIN, DOWEL | 8 | 8 | 8 | | | |
| 8 | 93604–10M03 | PIN, DOWEL | 2 | 2 | 2 | | | |
| 9 | 69J–11301–10 | ANODE COVER ASSY | 1 | 1 | 1 | | | |
| 10 | 68V–11325–02 | .ANODE | 1 | 1 | 1 | | | |
| 11 | 67F–11328–00 | .GROMMET, ANODE | 1 | 1 | 1 | | | |
| 12 | 90105–06M07 | .BOLT, FLANGE | 1 | 1 | 1 | | | |
| 13 | 90430–06M03 | .GASKET | 1 | 1 | 1 | | | |
| 14 | 97095–08040 | BOLT | 1 | 1 | 1 | | | |
| 15 | 92995–08600 | WASHER | 1 | 1 | 1 | | | |
| 16 | 6S5–11377–00 | HOSE | 1 | 1 | 1 | | | |
| 17 | 6S5–1131M–10–8P | COVER | 1 | 1 | 1 | | | |
| 18 | 6BH–13557–00 | GASKET | 1 | 1 | 1 | | | |
| 19 | 95024–06014 | BOLT, FLG.(SMALL HEAD) | 2 | 2 | 2 | | | |
| 20 | 95024–06020 | BOLT, FLG.(SMALL HEAD) | 9 | 9 | 9 | | | |
| 21 | 6CS–12469–A0 | JOINT 1 | 1 | 1 | 1 | | | |
| 22 | 6CS–12517–00 | GASKET, WATER INLET | 1 | 1 | 1 | | | |
| 23 | 95814–06035 | BOLT, FLANGE | 9 | 9 | 9 | | | |
| 24 | 6S5–13337–10 | PLATE, BAFFLE LOWER | 1 | 1 | 1 | | | |
| 25 | 90110–06182 | BOLT, HEXAGON SOCKET HEAD | 1 | 1 | 1 | | | |
| 26 | 99530–10114 | PIN, DOWEL | 2 | 2 | 2 | | | |
| 27 | 6ET–15362–00 | PLUG, OIL LEVEL | 1 | 1 | 1 | | | |

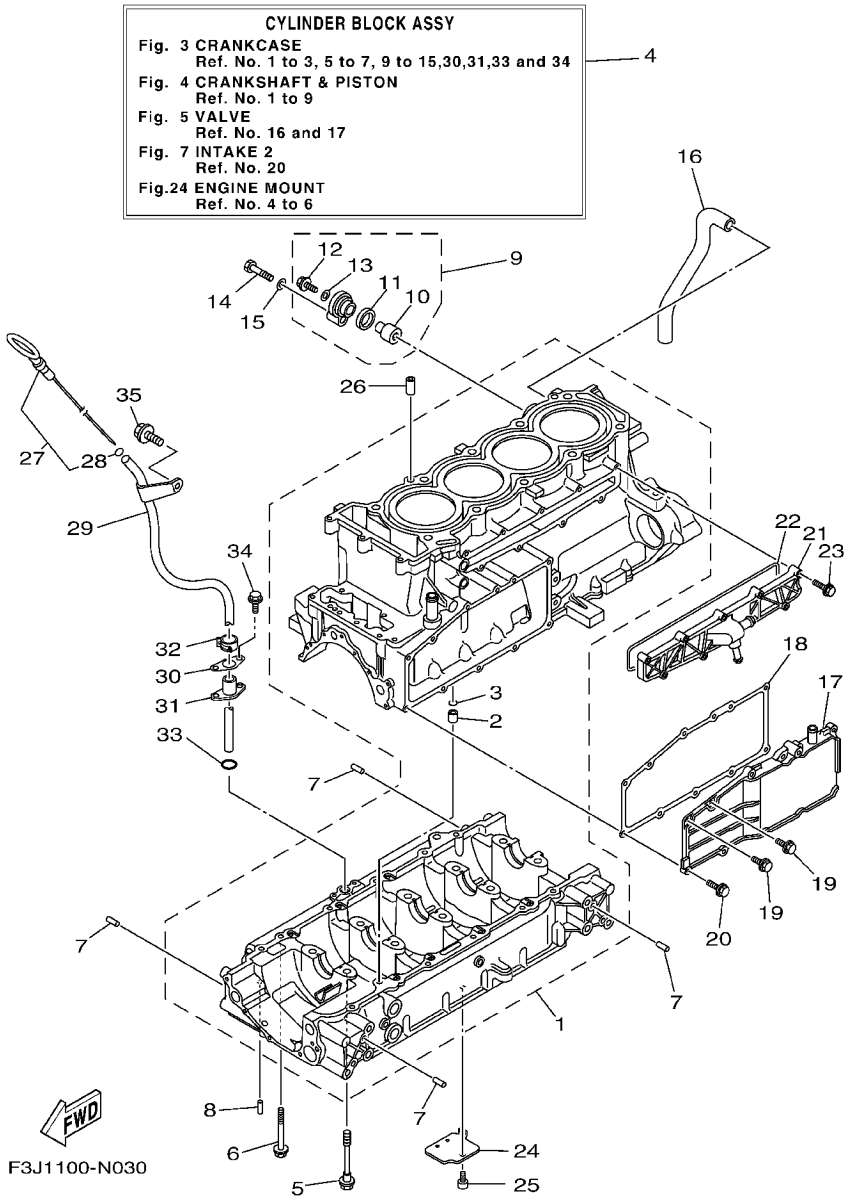


## FIG. 3 CRANKCASE

| REF. NO. | PART NO. | DESCRIPTION | CAN | EUR | GENE | | | REMARKS |
|---|---|---|---|---|---|---|---|---|
| 28 | 93210–06632 | .O-RING | 1 | 1 | 1 | | | |
| 29 | 6CS–8572F–00 | PIPE, OIL LEVEL | 1 | 1 | 1 | | | |
| 30 | 6BH–1319K–00 | PLATE | 1 | 1 | 1 | | | |
| 31 | 6CS–85516–00 | SPACER | 1 | 1 | 1 | | | |
| 32 | 90467–150A1 | CLIP | 1 | 1 | 1 | | | |
| 33 | 93210–12016 | O-RING | 1 | 1 | 1 | | | |
| 34 | 90109–06268 | BOLT | 2 | 2 | 2 | | | |
| 35 | 90105–08021 | BOLT, FLANGE | 1 | 1 | 1 | | | |

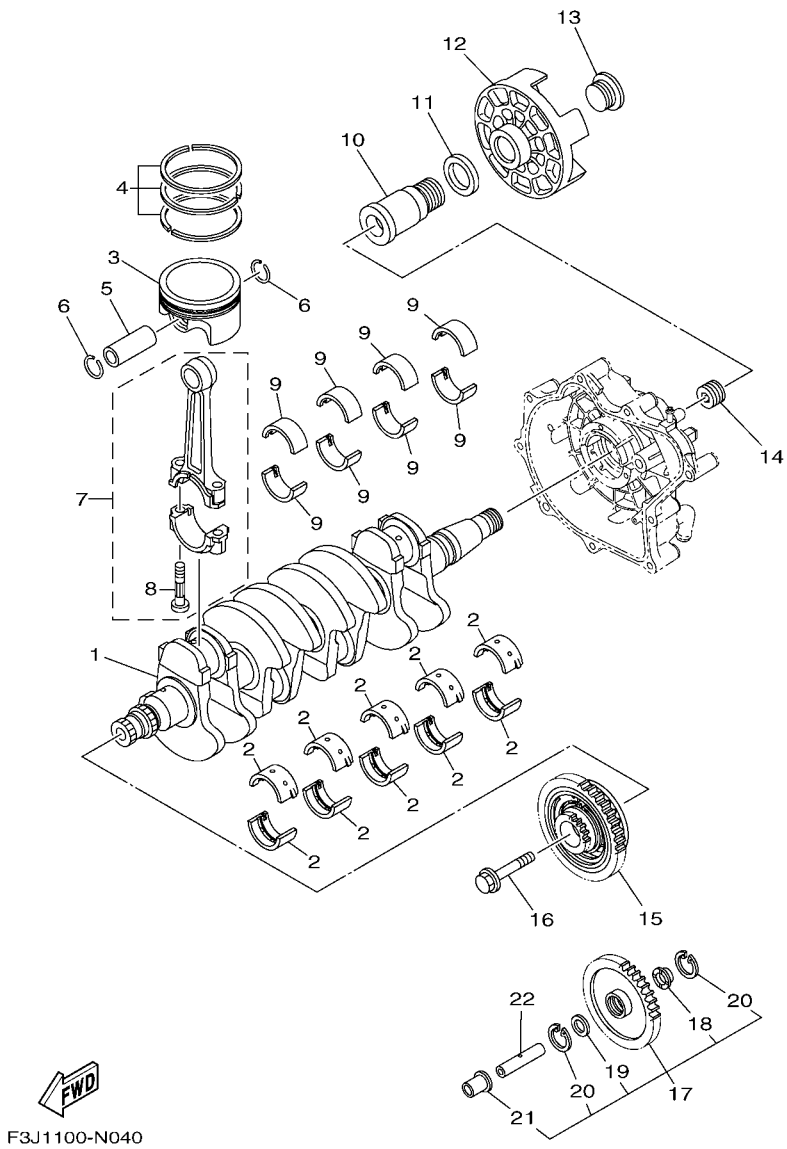


## FIG. 4 CRANKSHAFT & PISTON

| REF. NO. | PART NO. | DESCRIPTION | CAN | EUR | GENE | | | REMARKS |
|---|---|---|---|---|---|---|---|---|
| 1 | 6S5–11411–00 | CRANKSHAFT | 1 | 1 | 1 | | | |
| 2 | 6S5–11416–00 | PLANE BEARING, CRANKSHAFT 1 | 10 | 10 | 10 | | | UR BROWN |
| | 6S5–11416–10 | PLANE BEARING, CRANKSHAFT 1 | 10 | 10 | 10 | | | UR BLACK |
| | 6S5–11416–20 | PLANE BEARING, CRANKSHAFT 1 | 10 | 10 | 10 | | | UR BLUE |
| | 6S5–11416–30 | PLANE BEARING, CRANKSHAFT 1 | 10 | 10 | 10 | | | UR GREEN |
| | 6S5–11416–40 | PLANE BEARING, CRANKSHAFT 1 | 10 | 10 | 10 | | | UR YELLOW |
| 3 | 6ET–11631–00–B0 | PISTON (STD) | 4 | 4 | 4 | | | |
| 4 | 6S5–11603–00 | PISTON RING SET (STD) | 4 | 4 | 4 | | | |
| 5 | 6ET–11633–00 | PIN, PISTON | 4 | 4 | 4 | | | |
| 6 | 93450–24028 | CIRCLIP | 8 | 8 | 8 | | | |
| 7 | 6S5–11650–10 | CONNECTING ROD ASSY | 4 | 4 | 4 | | | |
| 8 | 6S5–11654–10 | .BOLT, CONNECTING ROD | 2 | 2 | 2 | | | |
| 9 | 6S5–11656–40 | PLANE BEARING, CONNECTING ROD | 8 | 8 | 8 | | | UR BLUE |
| | 6S5–11656–50 | PLANE BEARING, CONNECTING ROD | 8 | 8 | 8 | | | UR BLACK |
| | 6S5–11656–60 | PLANE BEARING, CONNECTING ROD | 8 | 8 | 8 | | | UR BROWN |
| | 6S5–11656–70 | PLANE BEARING, CONNECTING ROD | 8 | 8 | 8 | | | UR GREEN |
| 10 | 6S5–17572–01 | SHAFT, TRANSFER | 1 | 1 | 1 | | | |
| 11 | 6S5–12289–00 | WASHER | 1 | 1 | 1 | | | |
| 12 | 6S5–45813–01–94 | FLANGE, COUPLING | 1 | 1 | 1 | | | |
| 13 | 6S5–17525–01 | HOLDER 2 | 1 | 1 | 1 | | | |
| 14 | 6S5–11459–01 | NUT, SPECIAL | 1 | 1 | 1 | | | |
| 15 | 6ET–17800–00 | GEAR UNIT ASSY | 1 | 1 | 1 | | | |
| 16 | 6S5–17031–00 | BOLT | 1 | 1 | 1 | | | |
| 17 | 6S5–W1783–20 | DRIVE GEAR & COLLAR SET (18T) | 1 | 1 | 1 | | | |
| 18 | 6S5–17529–00 | .WASHER, THRUST | 1 | 1 | 1 | | | |
| 19 | 90201–132G5 | .WASHER, PLATE | 1 | 1 | 1 | | | |
| 20 | 99009–24700 | .CIRCLIP | 2 | 2 | 2 | | | |

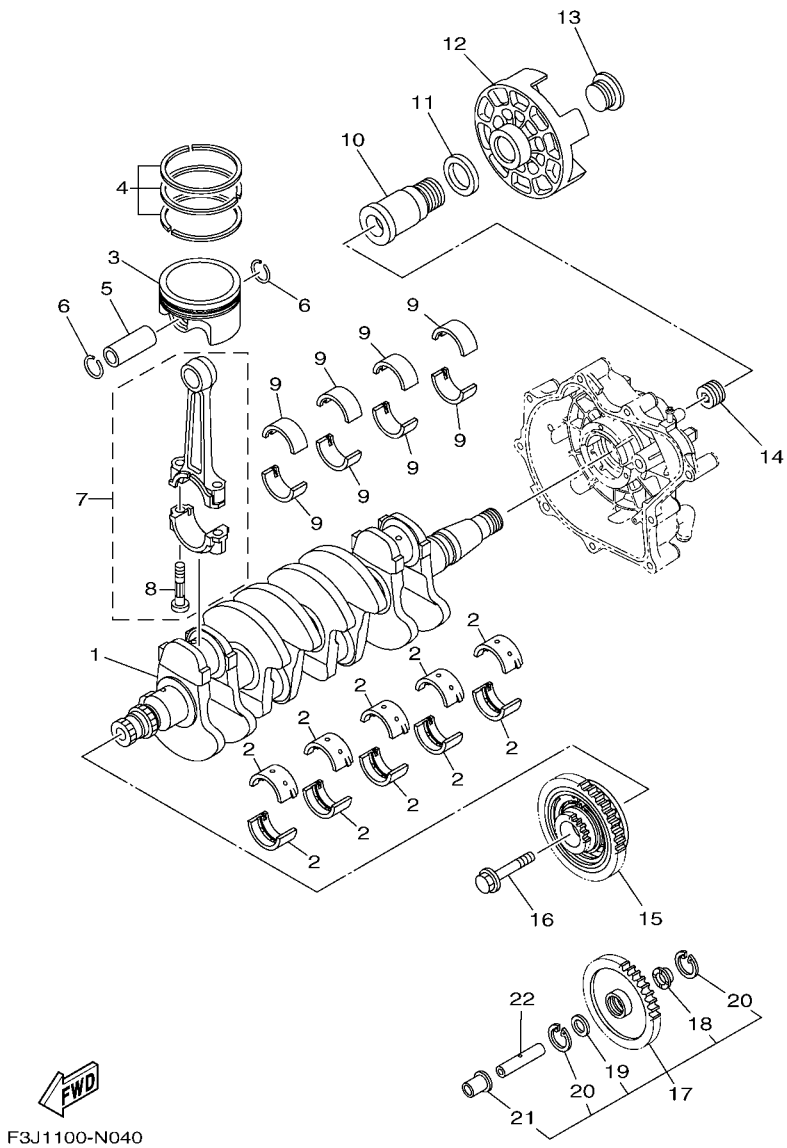


## FIG. 4 CRANKSHAFT & PISTON

| REF. NO. | PART NO. | DESCRIPTION | CAN | EUR | GENE | | | REMARKS |
|---|---|---|---|---|---|---|---|---|
| 21 | 6S5–17585–10 | .COLLAR, GEAR | 1 | 1 | 1 | | | |
| 22 | 6S5–17553–00 | SHAFT, MIDDLE DRIVEN | 1 | 1 | 1 | | | |

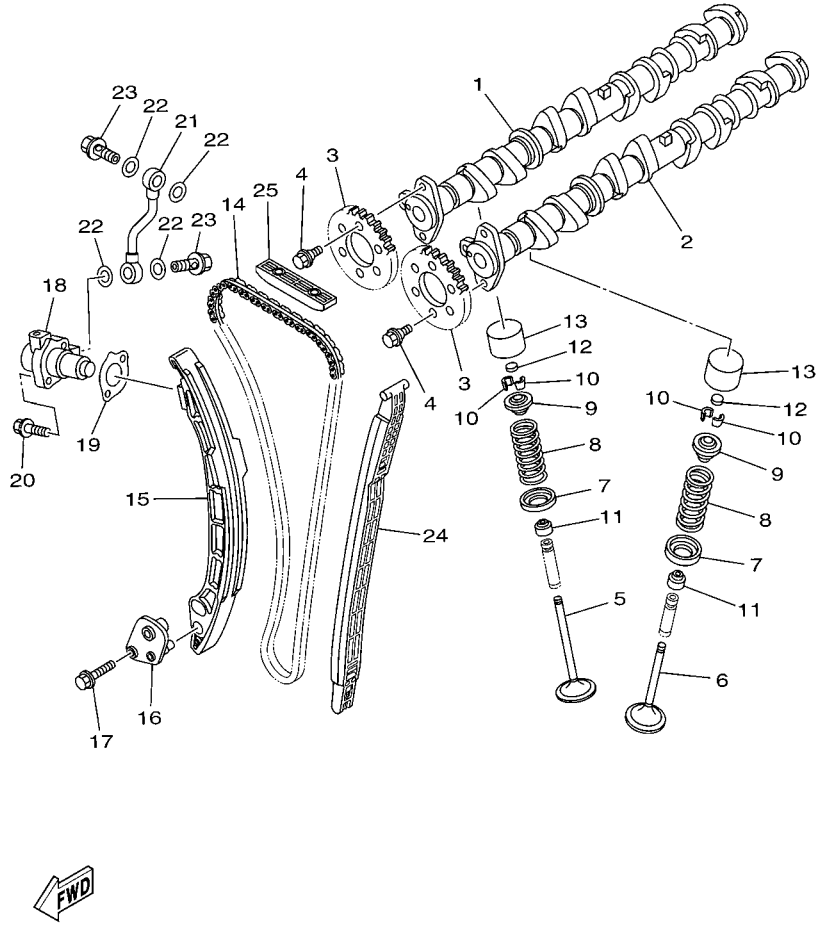


F2CD100-L050

## FIG. 5 VALVE

| REF. NO. | PART NO. | DESCRIPTION | CAN | EUR | GENE | | | REMARKS |
|---|---|---|---|---|---|---|---|---|
| 1 | 6S5–12171–10 | CAMSHAFT 1 | 1 | 1 | 1 | | | |
| 2 | 6ET–12181–00 | CAMSHAFT 2 | 1 | 1 | 1 | | | |
| 3 | 6D3–12176–10 | SPROCKET, CAM CHAIN | 2 | 2 | 2 | | | |
| 4 | 90105–07004 | BOLT, FLANGE | 4 | 4 | 4 | | | |
| 5 | 6S5–12111–00 | VALVE, INTAKE | 8 | 8 | 8 | | | |
| 6 | 6S5–12121–00 | VALVE, EXHAUST | 8 | 8 | 8 | | | |
| 7 | 6S5–12116–00 | SEAT, VALVE SPRING | 16 | 16 | 16 | | | |
| 8 | 6S5–12113–00 | SPRING, VALVE INNER | 16 | 16 | 16 | | | |
| 9 | 6S5–12117–00 | RETAINER, VALVE SPRING | 16 | 16 | 16 | | | |
| 10 | 3LD–12118–00 | LOCK, VALVE SPRING RETAINER | 32 | 32 | 32 | | | |
| 11 | 51Y–12119–00 | SEAL, VALVE STEM | 16 | 16 | 16 | | | |
| 12 | 3LD–12168–00 | PAD, ADJUSTING (1.20) | 16 | 16 | 16 | | | UR |
| | 3LD–12168–20 | PAD, ADJUSTING (1.25) | 16 | 16 | 16 | | | UR |
| | 3LD–12168–40 | PAD, ADJUSTING (1.30) | 16 | 16 | 16 | | | UR |
| | 3LD–12168–60 | PAD, ADJUSTING (1.35) | 16 | 16 | 16 | | | UR |
| | 3LD–12168–80 | PAD, ADJUSTING (1.40) | 16 | 16 | 16 | | | UR |
| | 3LD–12168–A0 | PAD, ADJUSTING (1.45) | 16 | 16 | 16 | | | UR |
| | 3LD–12168–F0 | PAD, ADJUSTING (1.50) | 16 | 16 | 16 | | | UR |
| | 3LD–12168–H1 | PAD, ADJUSTING (1.55) | 16 | 16 | 16 | | | UR |
| | 3LD–12168–K1 | PAD, ADJUSTING (1.60) | 16 | 16 | 16 | | | UR |
| | 3LD–12168–M1 | PAD, ADJUSTING (1.65) | 16 | 16 | 16 | | | UR |
| | 3LD–12168–R1 | PAD, ADJUSTING (1.70) | 16 | 16 | 16 | | | UR |
| | 3LD–12168–U1 | PAD, ADJUSTING (1.75) | 16 | 16 | 16 | | | UR |
| | 3LD–12168–W1 | PAD, ADJUSTING (1.80) | 16 | 16 | 16 | | | UR |
| | 3LD–12168–Y1 | PAD, ADJUSTING (1.85) | 16 | 16 | 16 | | | UR |
| | 3LD–12169–11 | PAD, ADJUSTING (1.90) | 16 | 16 | 16 | | | UR |
| | 3LD–12169–31 | PAD, ADJUSTING (1.95) | 16 | 16 | 16 | | | UR |

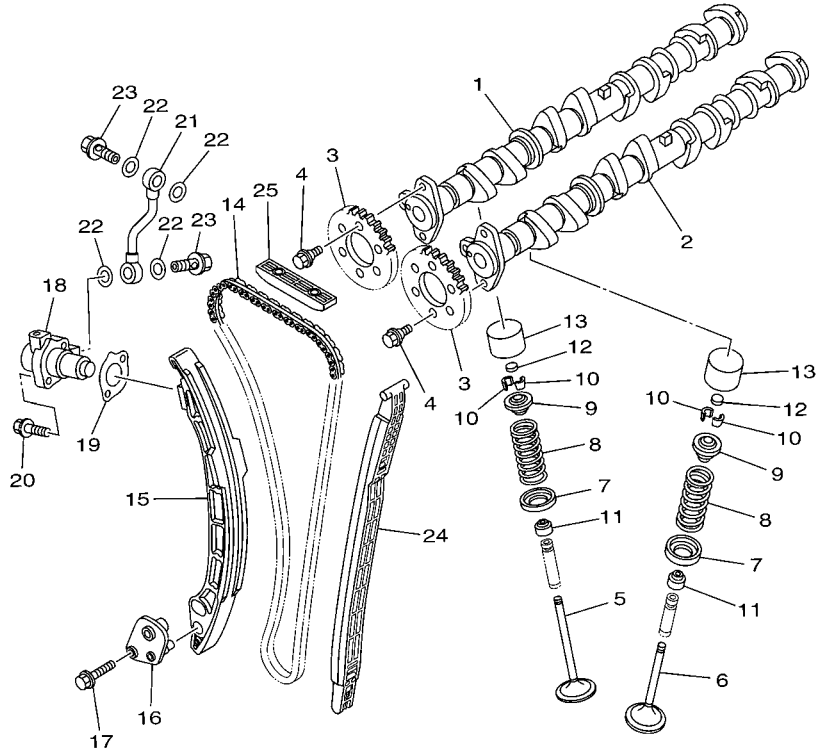


F2CD100-L050

## FIG. 5 VALVE

| REF. NO. | PART NO. | DESCRIPTION | CAN | EUR | GENE | | | REMARKS |
|---|---|---|---|---|---|---|---|---|
| 12 | 3LD–12169–50 | PAD, ADJUSTING (2.00) | 16 | 16 | 16 | | | UR |
| | 3LD–12169–70 | PAD, ADJUSTING (2.05) | 16 | 16 | 16 | | | UR |
| | 3LD–12169–90 | PAD, ADJUSTING (2.10) | 16 | 16 | 16 | | | UR |
| | 3LD–12169–E0 | PAD, ADJUSTING (2.15) | 16 | 16 | 16 | | | UR |
| | 3LD–12169–G0 | PAD, ADJUSTING (2.20) | 16 | 16 | 16 | | | UR |
| | 3LD–12169–J0 | PAD, ADJUSTING (2.25) | 16 | 16 | 16 | | | UR |
| | 3LD–12169–L0 | PAD, ADJUSTING (2.30) | 16 | 16 | 16 | | | UR |
| 13 | 6S5–12153–00 | LIFTER, VALVE | 16 | 16 | 16 | | | |
| 14 | 94591–66152 | CHAIN | 1 | 1 | 1 | | | |
| 15 | 6BH–12252–00 | DAMPER, CHAIN 2 | 1 | 1 | 1 | | | |
| 16 | 6BH–12279–00 | PLATE | 1 | 1 | 1 | | | |
| 17 | 95814–06030 | BOLT, FLANGE | 2 | 2 | 2 | | | |
| 18 | 6S5–12210–00 | TENSIONER ASSY, CAM CHAIN | 1 | 1 | 1 | | | |
| 19 | 6S5–121E2–00 | GASKET | 1 | 1 | 1 | | | |
| 20 | 91380–06025 | BOLT | 2 | 2 | 2 | | | |
| 21 | 6S5–13418–00 | PIPE, OIL 2 | 1 | 1 | 1 | | | |
| 22 | 90430–10007 | GASKET | 4 | 4 | 4 | | | |
| 23 | 90401–10040 | BOLT, UNION | 2 | 2 | 2 | | | |
| 24 | 6BH–12251–00 | DAMPER, CHAIN 1 | 1 | 1 | 1 | | | |
| 25 | 6BH–12241–00 | GUIDE, STOPPER 2 | 1 | 1 | 1 | | | |

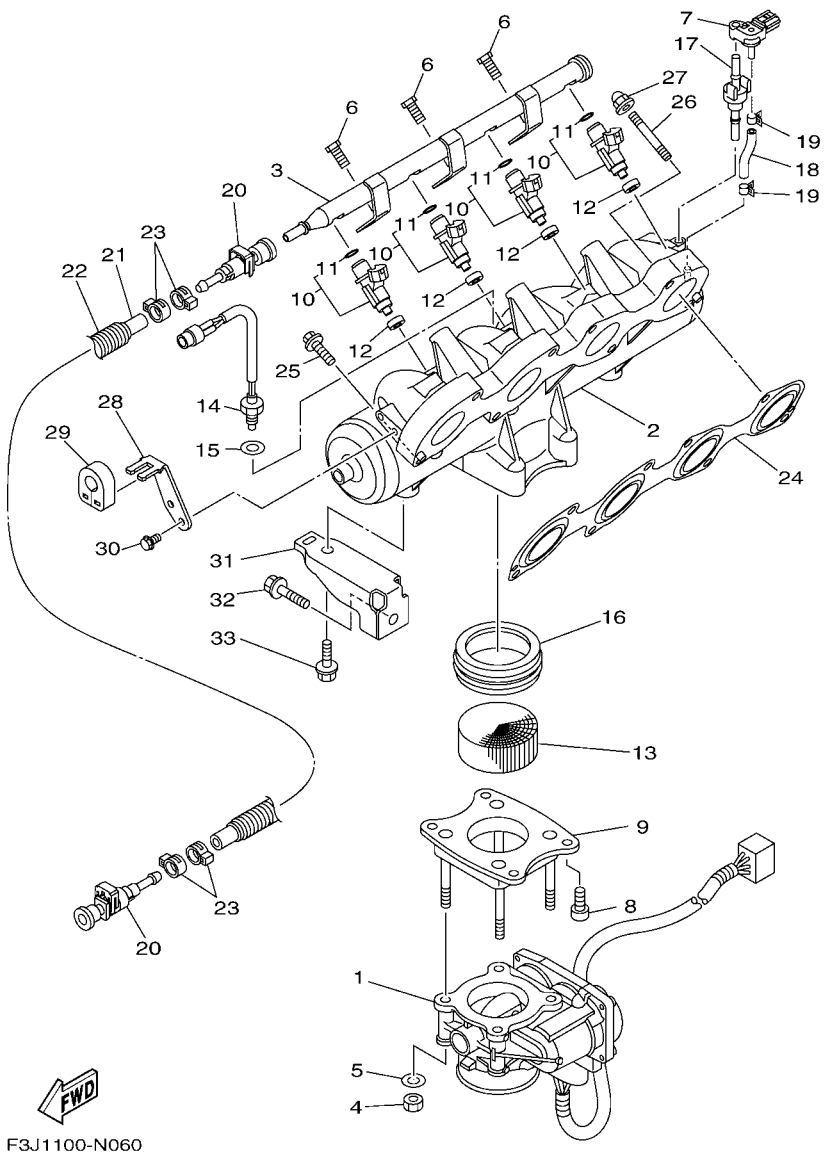


## FIG. 6 INTAKE 1

| REF. NO. | PART NO. | DESCRIPTION | CAN | EUR | GENE | | | REMARKS |
|---|---|---|---|---|---|---|---|---|
| 1 | 6S5–13750–10 | THROTTLE BODY ASSY | 1 | 1 | 1 | | | |
| 2 | 6S5–13641–A2 | MANIFOLD, INTAKE 1 | 1 | 1 | 1 | | | |
| 3 | 6CS–12880–00 | DELIVERY PIPE | 1 | 1 | 1 | | | |
| 4 | 6P2–13588–00 | NUT | 4 | 4 | 4 | | | |
| 5 | 6P2–13578–00 | WASHER | 4 | 4 | 4 | | | |
| 6 | 6CS–14446–00 | BOLT | 3 | 3 | 3 | | | |
| 7 | 6BH–82380–00 | SENSOR, PRESSURE | 1 | 1 | 1 | | | |
| 8 | 6S5–14496–00 | BOLT | 4 | 4 | 4 | | | |
| 9 | 6S5–14360–10 | THROTTLE DAMPER ASSY | 1 | 1 | 1 | | | |
| 10 | 6ET–13761–00 | INJECTOR | 4 | 4 | 4 | | | |
| 11 | 68V–1416A–00 | .O-RING | 1 | 1 | 1 | | | |
| 12 | 8FP–13556–10 | GASKET, MANIFOLD | 4 | 4 | 4 | | | |
| 13 | 6D3–1444B–00 | RIBBON | 1 | 1 | 1 | | | |
| 14 | 6S5–85886–00 | SENSOR, AIR TEMPERATURE | 1 | 1 | 1 | | | |
| 15 | 6S5–14285–00 | WASHER | 1 | 1 | 1 | | | |
| 16 | 6S5–14457–00 | HOLDER | 1 | 1 | 1 | | | |
| 17 | 6BH–14445–00 | GROMMET | 1 | 1 | 1 | | | |
| 18 | 6S5–13532–00 | HOSE, VACUUM SENSING 3 | 1 | 1 | 1 | | | |
| 19 | 6S5–14159–00 | CLIP | 2 | 2 | 2 | | | |
| 20 | 6S5–24300–01 | FUEL PIPE JOINT | 2 | 2 | 2 | | | |
| 21 | 6AN–14294–10 | HOSE | 1 | 1 | 1 | | | |
| 22 | 90447–19017 | TUBE (L495) | 1 | 1 | 1 | | | |
| 23 | 90450–17M17 | HOSE CLAMP ASSY | 4 | 4 | 4 | | | |
| 24 | 6BH–13645–00 | GASKET, MANIFOLD 1 | 1 | 1 | 1 | | | |
| 25 | 97513–08535 | BOLT, WITH WASHER | 6 | 6 | 6 | | | |
| 26 | 90116–08032 | BOLT, STUD | 2 | 2 | 2 | | | |
| 27 | 90176–08080 | NUT, CROWN | 2 | 2 | 2 | | | |

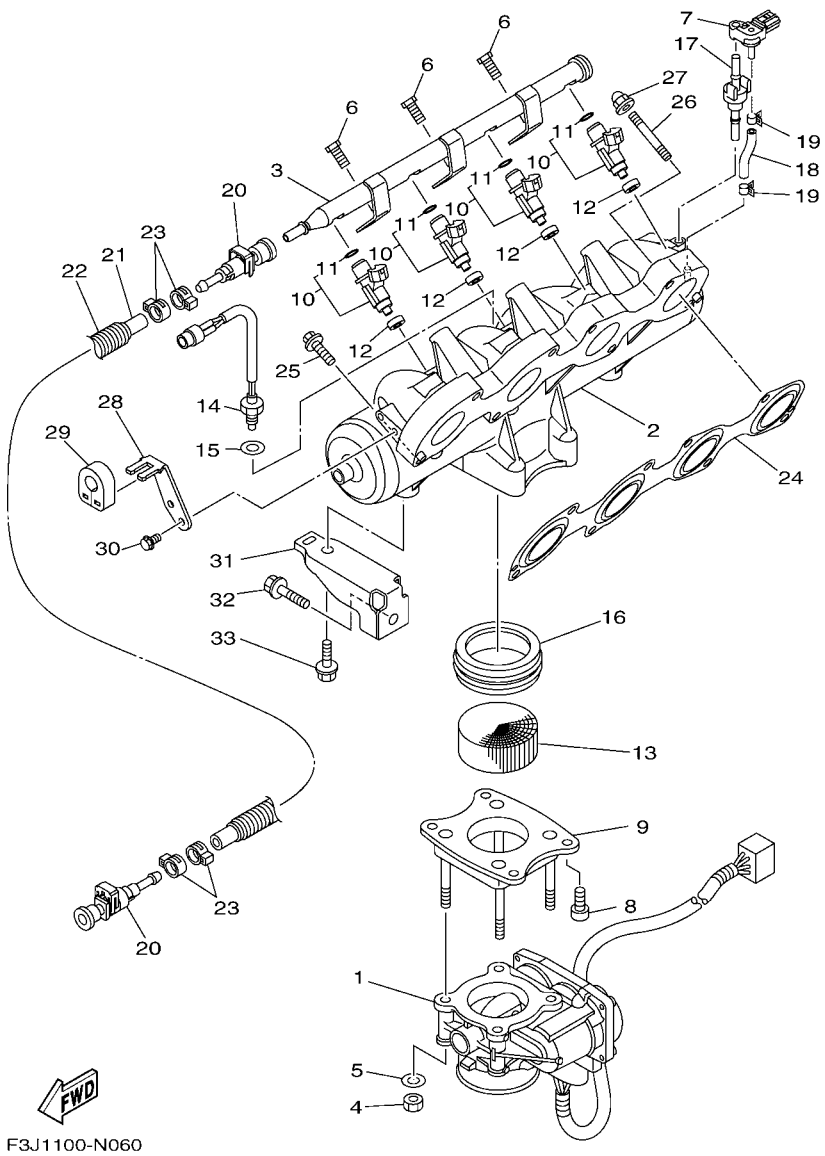


## FIG. 6 INTAKE 1

| REF. NO. | PART NO. | DESCRIPTION | CAN | EUR | GENE | | | REMARKS |
|---|---|---|---|---|---|---|---|---|
| 28 | 6CS–14572–00 | PLATE, STAY | 1 | 1 | 1 | | | |
| 29 | 6CS–14445–00 | GROMMET | 1 | 1 | 1 | | | |
| 30 | 95023–06012 | BOLT | 2 | 2 | 2 | | | |
| 31 | 6CS–14413–00 | STAY | 2 | 2 | 2 | | | |
| 32 | 90119–08099 | BOLT, WITH WASHER | 2 | 2 | 2 | | | |
| 33 | 90119–08074 | BOLT, WITH WASHER | 2 | 2 | 2 | | | |

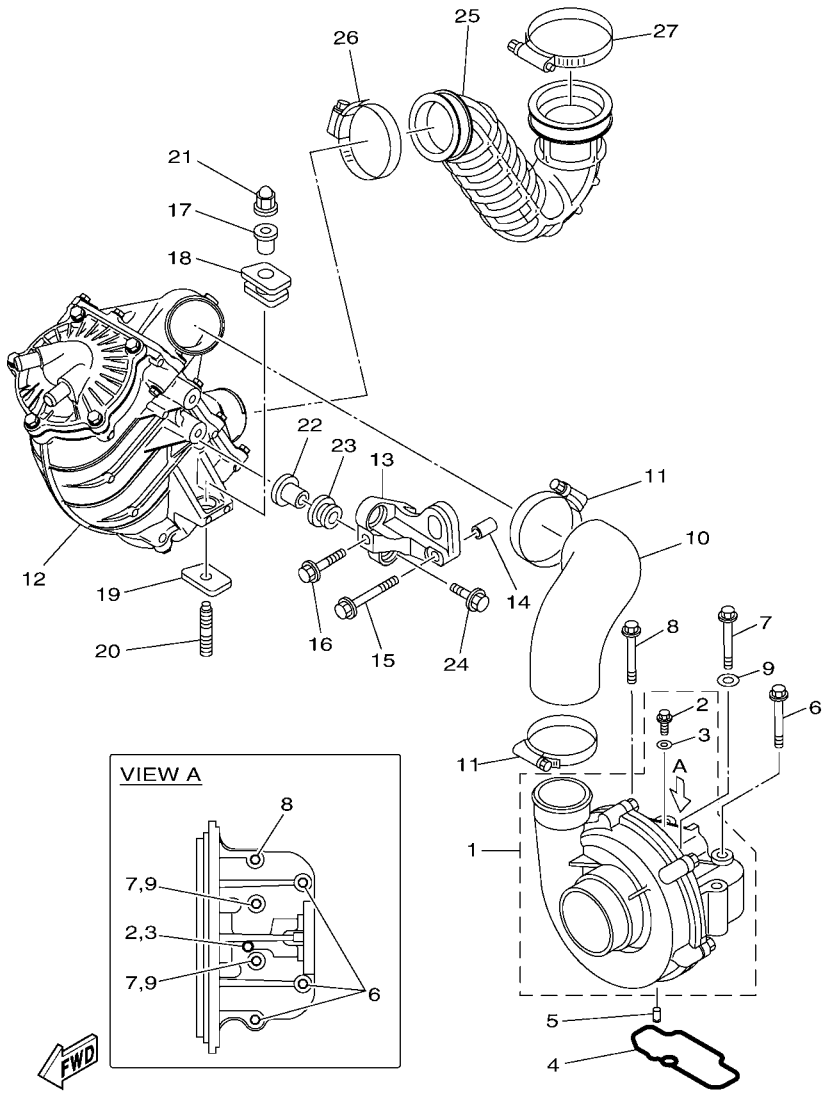


F3J1100-N070

## FIG. 7 INTAKE 2

| REF. NO. | PART NO. | DESCRIPTION | CAN | EUR | GENE | | | REMARKS |
|---|---|---|---|---|---|---|---|---|
| 1 | 6ET–141A0–01 | SUPER CHARGER ASSY | 1 | 1 | 1 | | | |
| 2 | 90105–05020 | .BOLT, FLANGE | 1 | 1 | 1 | | | |
| 3 | 6S5–14199–00 | .GASKET | 1 | 1 | 1 | | | |
| 4 | 6S5–1416A–00 | O-RING | 1 | 1 | 1 | | | |
| 5 | 93604–10M03 | PIN, DOWEL | 2 | 2 | 2 | | | |
| 6 | 95814–08065 | BOLT, FLANGE | 3 | 3 | 3 | | | |
| 7 | 95814–06065 | BOLT, FLANGE | 2 | 2 | 2 | | | |
| 8 | 90105–08188 | BOLT, FLANGE | 1 | 1 | 1 | | | |
| 9 | 90201–06028 | WASHER, PLATE | 2 | 2 | 2 | | | |
| 10 | 6S5–14349–00 | PIPE | 1 | 1 | 1 | | | |
| 11 | 90450–75003 | HOSE CLAMP ASSY | 2 | 2 | 2 | | | |
| 12 | 6ET–13670–00 | AIR COOLER ASSY. | 1 | 1 | 1 | | | |
| 13 | 6S5–13691–11 | BRACKET, AIR COOLER | 1 | 1 | 1 | | | |
| 14 | 99590–14016 | PIN, DOWEL | 2 | 2 | 2 | | | |
| 15 | 90119–10047 | BOLT, WITH WASHER | 1 | 1 | 1 | | | |
| 16 | 90119–10046 | BOLT, WITH WASHER | 1 | 1 | 1 | | | |
| 17 | 90387–11007 | COLLAR | 1 | 1 | 1 | | | |
| 18 | 6S5–14435–00 | GROMMET | 1 | 1 | 1 | | | |
| 19 | 6S5–14243–01 | PLATE | 1 | 1 | 1 | | | |
| 20 | 90116–10044 | BOLT, STUD | 1 | 1 | 1 | | | |
| 21 | 90176–10001 | NUT, CROWN | 1 | 1 | 1 | | | |
| 22 | 90387–11008 | COLLAR | 2 | 2 | 2 | | | |
| 23 | 90480–21M63 | GROMMET | 2 | 2 | 2 | | | |
| 24 | 90119–10011 | BOLT, WITH WASHER | 2 | 2 | 2 | | | |
| 25 | 6CS–13651–00 | PIPE, BOOST | 1 | 1 | 1 | | | |
| 26 | 90450–70006 | HOSE CLAMP ASSY | 1 | 1 | 1 | | | |
| 27 | 90450–90002 | HOSE CLAMP ASSY | 1 | 1 | 1 | | | |

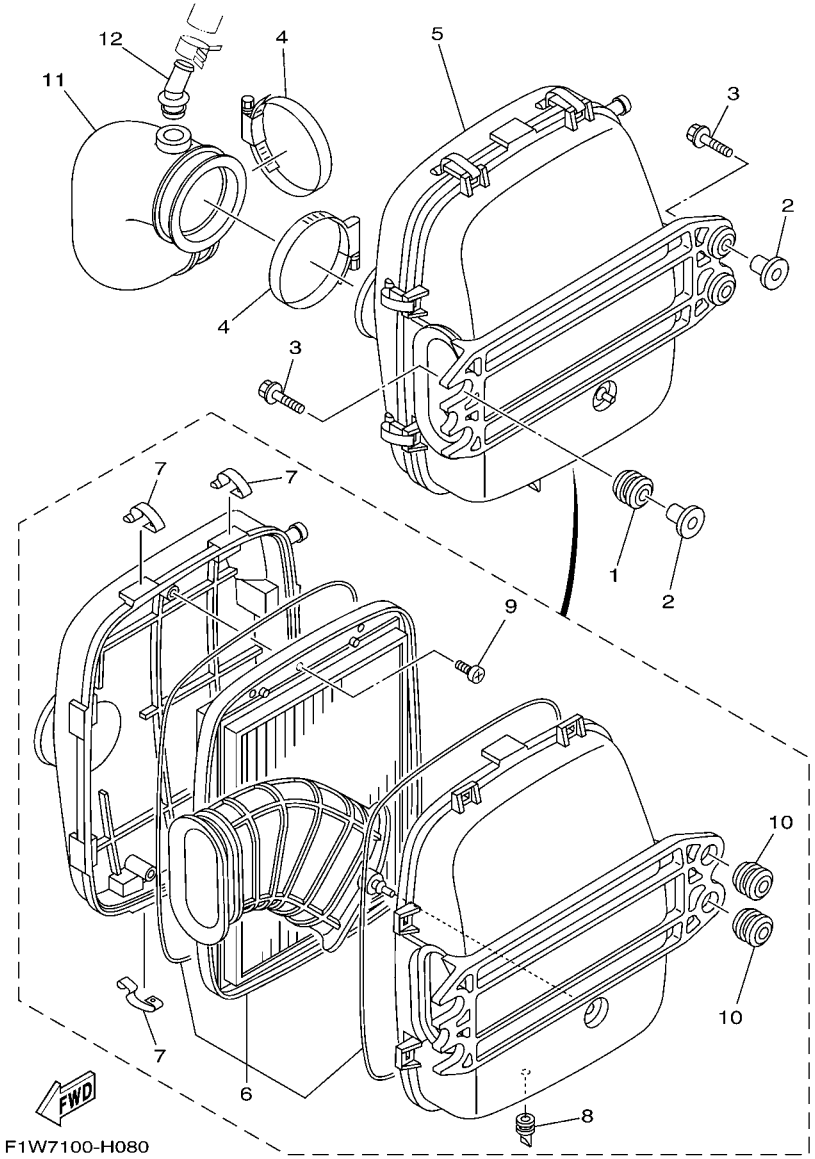


## FIG. 8 INTAKE 3

| REF. NO. | PART NO. | DESCRIPTION | CAN | EUR | GENE | | | REMARKS |
|---|---|---|---|---|---|---|---|---|
| 1 | 90480–22M15 | GROMMET | 2 | 2 | 2 | | | |
| 2 | 90387–08M37 | COLLAR | 4 | 4 | 4 | | | |
| 3 | 90119–08M22 | BOLT, WITH WASHER | 4 | 4 | 4 | | | |
| 4 | 90450–90002 | HOSE CLAMP ASSY | 2 | 2 | 2 | | | |
| 5 | 6S5–E4410–01 | AIR CLEANER ASSY. | 1 | 1 | 1 | | | |
| 6 | 6S5–E4451–00 | .ELEMENT, AIR CLEANER | 1 | 1 | 1 | | | |
| 7 | 6S5–E4436–00 | .HOOK | 8 | 8 | 8 | | | |
| 8 | 6S5–G2717–00 | .RUBBER, SEAL 2 | 1 | 1 | 1 | | | |
| 9 | 97780–60516 | .SCREW, TAPPING | 3 | 3 | 3 | | | |
| 10 | 90480–22801 | .GROMMET | 2 | 2 | 2 | | | |
| 11 | 6S5–E4419–00 | PIPE | 1 | 1 | 1 | | | |
| 12 | 6S5–R1142–10 | CONNECTION | 1 | 1 | 1 | | | |

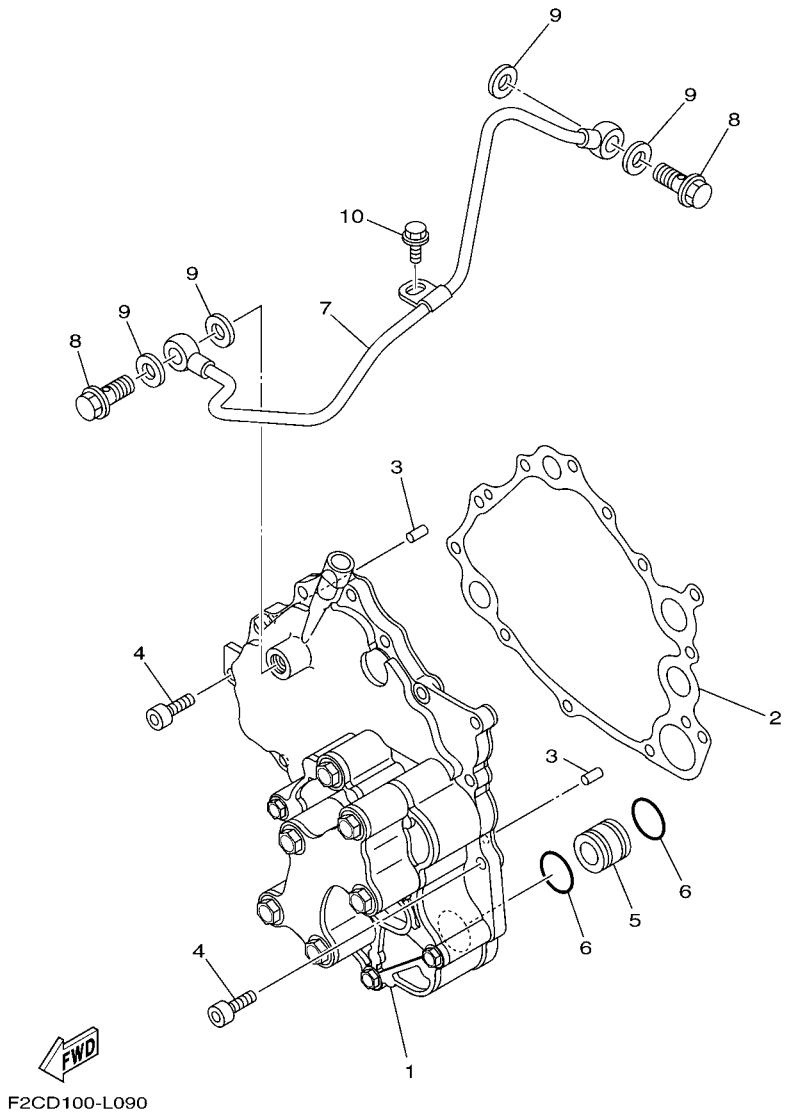


## FIG. 9 OIL PUMP

| REF. NO. | PART NO. | DESCRIPTION | CAN | EUR | GENE | | | REMARKS |
|---|---|---|---|---|---|---|---|---|
| 1 | 6S5–13300–22 | OIL PUMP ASSY | 1 | 1 | 1 | | | |
| 2 | 6S5–13563–00 | GASKET | 1 | 1 | 1 | | | |
| 3 | 93606–12019 | PIN, DOWEL | 2 | 2 | 2 | | | |
| 4 | 91314–06020 | BOLT, HEXAGON SOCKET HEAD | 12 | 12 | 12 | | | |
| 5 | 6S5–13446–10 | CONNECTOR | 1 | 1 | 1 | | | |
| 6 | 93210–21631 | O-RING | 2 | 2 | 2 | | | |
| 7 | 6S5–13416–00 | PIPE, OIL 1 | 1 | 1 | 1 | | | |
| 8 | 90401–10040 | BOLT, UNION | 2 | 2 | 2 | | | |
| 9 | 90430–10007 | GASKET | 4 | 4 | 4 | | | |
| 10 | 95023–06012 | BOLT | 1 | 1 | 1 | | | |

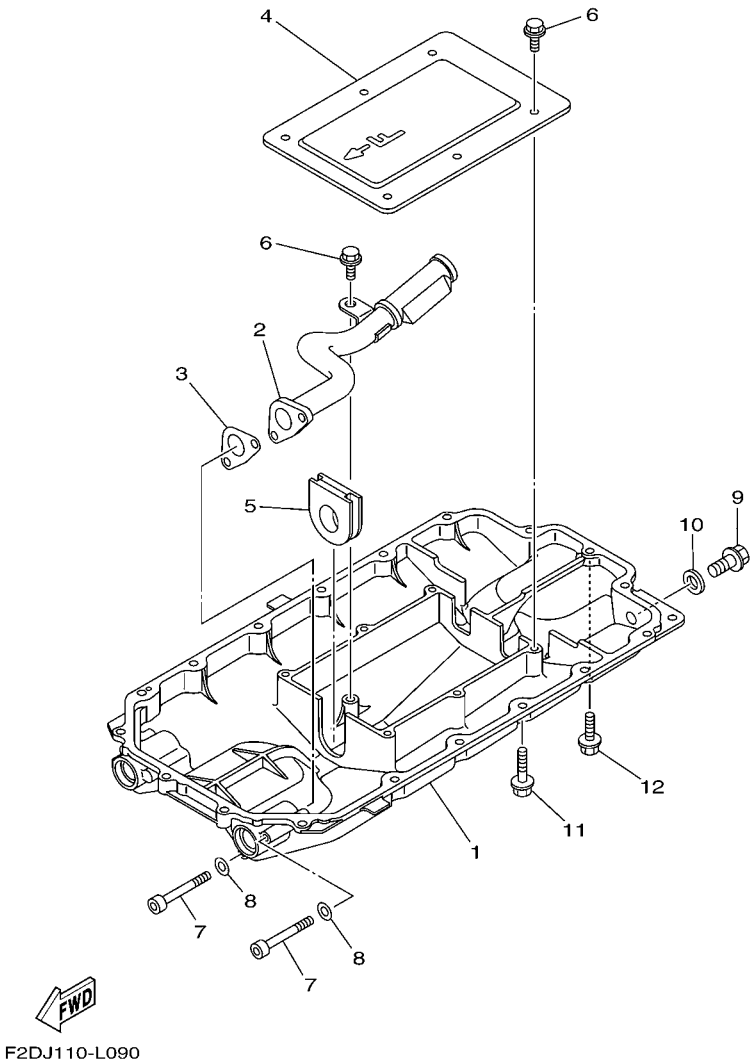


## FIG. 10 OIL PAN

| REF. NO. | PART NO. | DESCRIPTION | CAN | EUR | GENE | | | REMARKS |
|---|---|---|---|---|---|---|---|---|
| 1 | 6S5–1310A–22 | PAN, OIL | 1 | 1 | 1 | | | |
| 2 | 6S5–13405–10 | OIL PIPE COMP. 1 | 1 | 1 | 1 | | | |
| 3 | 6S5–13477–00 | GASKET | 1 | 1 | 1 | | | |
| 4 | 6S5–13317–10 | PLATE, BAFFLE | 1 | 1 | 1 | | | |
| 5 | 6S5–15486–10 | GROMMET | 1 | 1 | 1 | | | |
| 6 | 95817–06014 | BOLT, FLANGE | 7 | 7 | 7 | | | |
| 7 | 91314–06060 | BOLT, HEXAGON SOCKET HEAD | 2 | 2 | 2 | | | |
| 8 | 90201–06028 | WASHER, PLATE | 2 | 2 | 2 | | | |
| 9 | 95814–08020 | BOLT, FLANGE | 1 | 1 | 1 | | | |
| 10 | 90430–08209 | GASKET | 1 | 1 | 1 | | | |
| 11 | 95024–06035 | BOLT, FLG.(SMALL HEAD) | 17 | 17 | 17 | | | |
| 12 | 95024–06020 | BOLT, FLG.(SMALL HEAD) | 1 | 1 | 1 | | | |

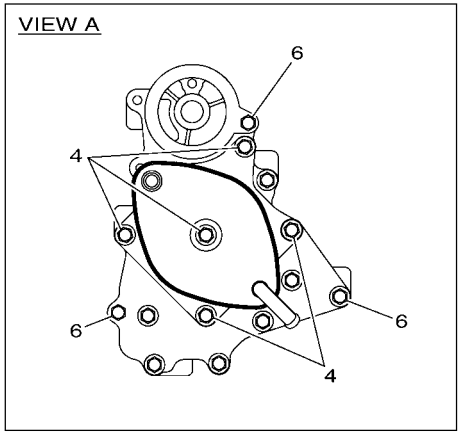


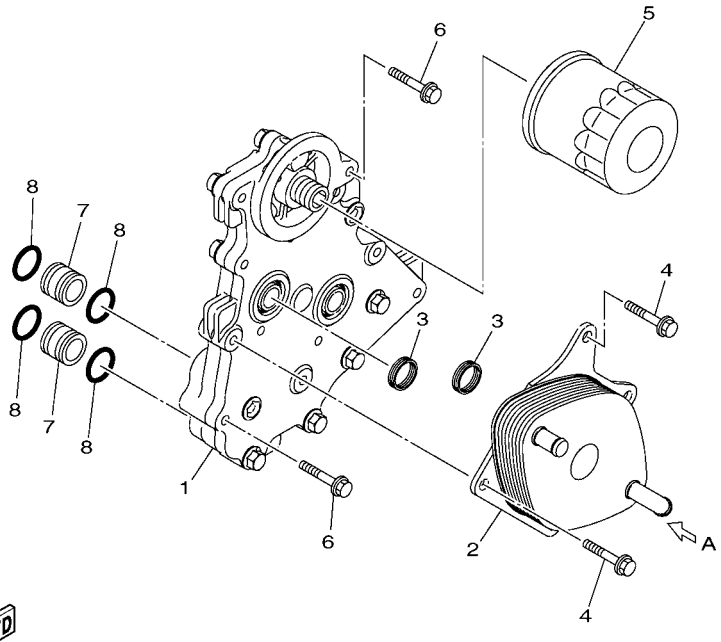


F3J1100-N110

## FIG. 11 OIL COOLER

| REF. NO. | PART NO. | DESCRIPTION | CAN | EUR | GENE | | | REMARKS |
|---|---|---|---|---|---|---|---|---|
| 1 | 6ET–13460–00 | ADAPTER PLATE ASSY | 1 | 1 | 1 | | | |
| 2 | 6ET–13470–00 | OIL COOLER ASSY | 1 | 1 | 1 | | | |
| 3 | 6ET–13557–00 | GASKET | 2 | 2 | 2 | | | |
| 4 | 95814–08030 | BOLT, FLANGE | 5 | 5 | 5 | | | |
| 5 | 69J–13440–03 | ELEMENT ASSY, OIL CLEANER | 1 | 1 | 1 | | | |
| 6 | 95814–08050 | BOLT, FLANGE | 3 | 3 | 3 | | | |
| 7 | 60E–13446–00 | CONNECTOR | 2 | 2 | 2 | | | |
| 8 | 93210–18322 | O-RING | 4 | 4 | 4 | | | |

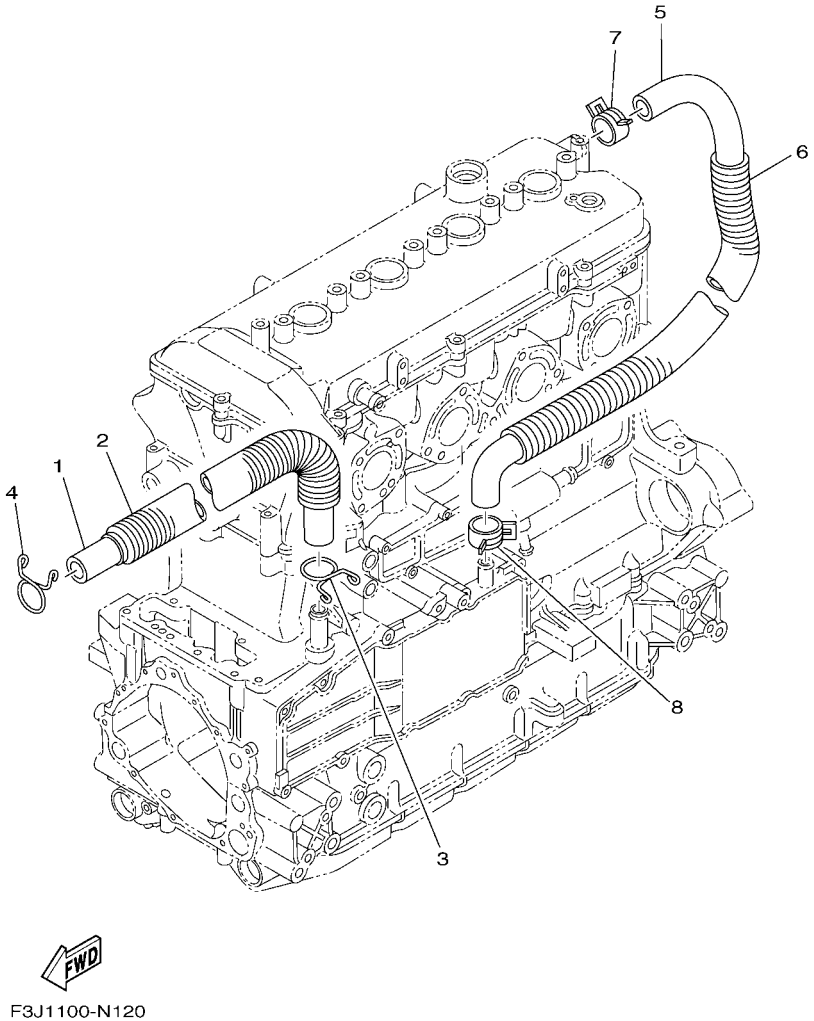


## FIG. 12 BREATHER OIL

| REF. NO. | PART NO. | DESCRIPTION | CAN | EUR | GENE | | | REMARKS |
|---|---|---|---|---|---|---|---|---|
| 1 | 6S5–11166–10 | PIPE, BREATHER 1 | 1 | 1 | 1 | | | |
| 2 | 90447–22015 | TUBE (L410) | 1 | 1 | 1 | | | |
| 3 | 90467–190A0 | CLIP | 1 | 1 | 1 | | | |
| 4 | 90467–190A0 | CLIP | 1 | 1 | 1 | | | |
| 5 | 6S5–11167–10 | PIPE, BREATHER 2 | 1 | 1 | 1 | | | |
| 6 | 90447–22016 | TUBE (L490) | 1 | 1 | 1 | | | |
| 7 | 90467–240A0 | CLIP | 1 | 1 | 1 | | | |
| 8 | 90467–200A3 | CLIP | 1 | 1 | 1 | | | |

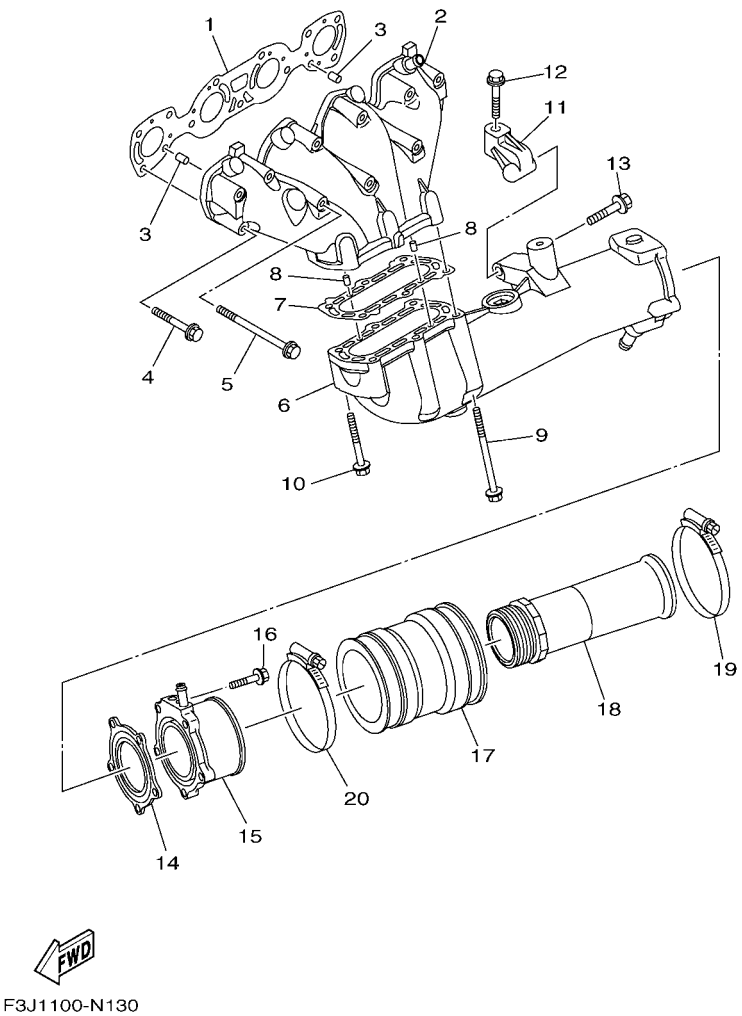


## FIG. 13 EXHAUST 1

| REF. NO. | PART NO. | DESCRIPTION | CAN | EUR | GENE | | | REMARKS |
|---|---|---|---|---|---|---|---|---|
| 1 | 6ET–14613–00 | GASKET, EXHAUST PIPE | 1 | 1 | 1 | | | |
| 2 | 6BH–14711–10 | MUFFLER 1 | 1 | 1 | 1 | | | |
| 3 | 93608–16M16 | PIN, DOWEL | 2 | 2 | 2 | | | |
| 4 | 90119–08034 | BOLT, WITH WASHER | 8 | 8 | 8 | | | |
| 5 | 90119–08097 | BOLT, WITH WASHER | 3 | 3 | 3 | | | |
| 6 | 6BH–14721–10 | MUFFLER 2 | 1 | 1 | 1 | | | |
| 7 | 6S5–14739–00 | GASKET, MUFFLER DAMPER 1 | 1 | 1 | 1 | | | |
| 8 | 93606–12019 | PIN, DOWEL | 2 | 2 | 2 | | | |
| 9 | 90119–08097 | BOLT, WITH WASHER | 4 | 4 | 4 | | | |
| 10 | 90119–08034 | BOLT, WITH WASHER | 2 | 2 | 2 | | | |
| 11 | 6S5–14771–00–94 | STAY, MUFFLER 1 | 1 | 1 | 1 | | | |
| 12 | 90119–08096 | BOLT, WITH WASHER | 1 | 1 | 1 | | | |
| 13 | 90119–10029 | BOLT, WITH WASHER | 1 | 1 | 1 | | | |
| 14 | 6BH–14749–00 | GASKET, MUFFLER DAMPER 2 | 1 | 1 | 1 | | | |
| 15 | 6BH–14784–01–94 | PIPE, TAIL | 1 | 1 | 1 | | | |
| 16 | 95024–08035 | BOLT, FLG.(SMALL HEAD) | 5 | 5 | 5 | | | |
| 17 | 6S5–E4752–00 | PIPE, OUTLET | 1 | 1 | 1 | | | |
| 18 | 6CS–1475A–00 | PIPE 1 | 1 | 1 | 1 | | | |
| 19 | 90450–99016 | HOSE CLAMP ASSY | 1 | 1 | 1 | | | |
| 20 | 90450–99015 | HOSE CLAMP ASSY | 1 | 1 | 1 | | | |

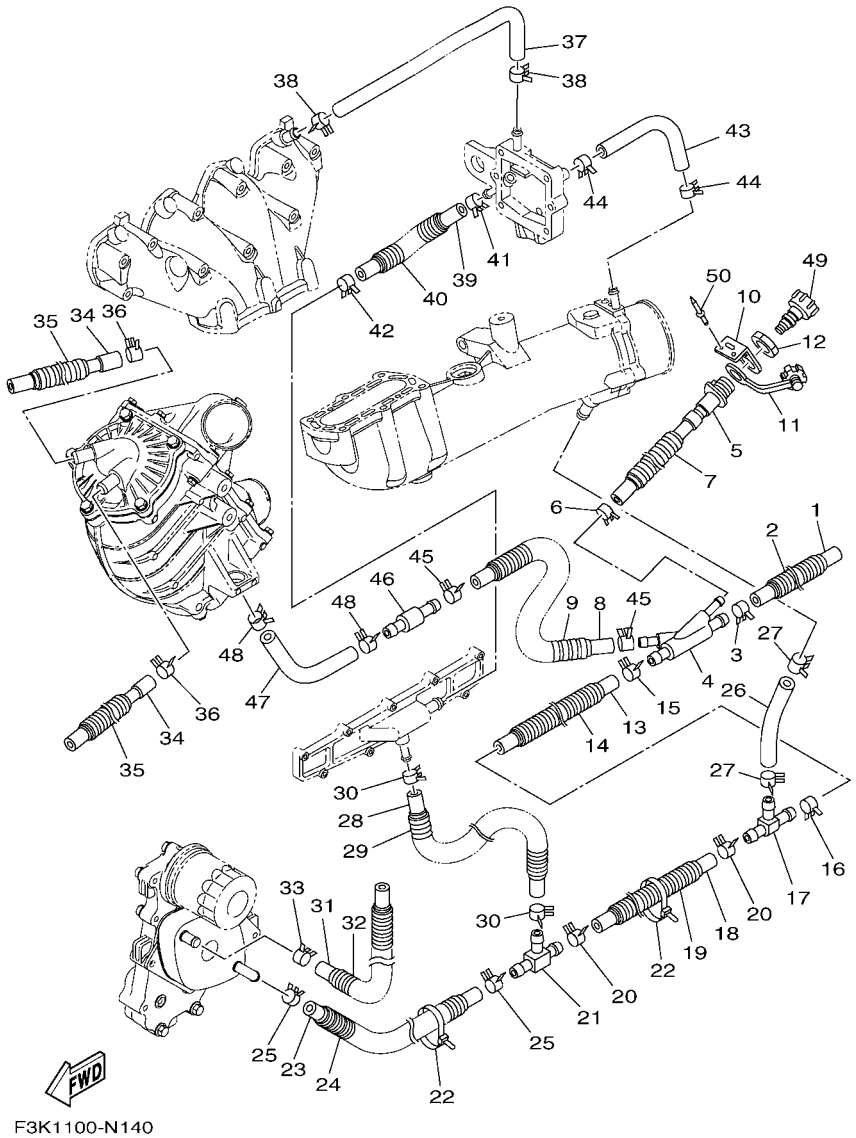


F3K1100-N140

## FIG. 14 EXHAUST 2

| REF. NO. | PART NO. | DESCRIPTION | CAN | EUR | GENE | | | REMARKS |
|---|---|---|---|---|---|---|---|---|
| 1 | 90445–21813 | HOSE (L285) | 1 | 1 | 1 | | | |
| 2 | 90447–22801 | TUBE (L200) | 1 | 1 | 1 | | | |
| 3 | 90467–200A3 | CLIP | 1 | 1 | 1 | | | |
| 4 | 6ET–12581–10 | JOINT, HOSE 1 | 1 | 1 | 1 | | | |
| 5 | 63M–12580–00 | JOINT ASSY | 1 | 1 | 1 | | | |
| 6 | 90467–150A5 | CLIP | 1 | 1 | 1 | | | |
| 7 | 90447–19801 | TUBE (L485) | 1 | 1 | 1 | | | |
| 8 | 90445–21807 | HOSE (L970) | 1 | 1 | 1 | | | |
| 9 | 90447–22802 | TUBE (L850) | 1 | 1 | 1 | | | |
| 10 | 60E–12443–00 | STAY | 1 | 1 | 1 | | | |
| 11 | 682–84385–01 | CAP,1 | 1 | 1 | 1 | | | |
| 12 | EU0–61652–00 | NUT | 1 | 1 | 1 | | | |
| 13 | 6S5–1243E–01 | HOSE 2 | 1 | 1 | 1 | | | |
| 14 | 90447–22011 | TUBE (L170) | 1 | 1 | 1 | | | |
| 15 | 90467–200A3 | CLIP | 1 | 1 | 1 | | | |
| 16 | 90467–200A3 | CLIP | 1 | 1 | 1 | | | |
| 17 | 6BH–12584–00 | JOINT, HOSE 3 | 1 | 1 | 1 | | | |
| 18 | 90445–18017 | HOSE (L220) | 1 | 1 | 1 | | | |
| 19 | 90447–19004 | HOSE, WITH SPRING (L=130) | 1 | 1 | 1 | | | |
| 20 | 90467–160A0 | CLIP | 2 | 2 | 2 | | | |
| 21 | 6ET–12582–00 | JOINT, HOSE 2 | 1 | 1 | 1 | | | |
| 22 | 90464–35132 | CLAMP | 2 | 2 | 2 | | | |
| 23 | 90445–18017 | HOSE (L220) | 1 | 1 | 1 | | | |
| 24 | 90447–19004 | HOSE, WITH SPRING (L=130) | 1 | 1 | 1 | | | |
| 25 | 90467–160A0 | CLIP | 2 | 2 | 2 | | | |
| 26 | 6S5–12589–01 | HOSE 6 | 1 | 1 | 1 | | | |
| 27 | 90467–200A3 | CLIP | 2 | 2 | 2 | | | |

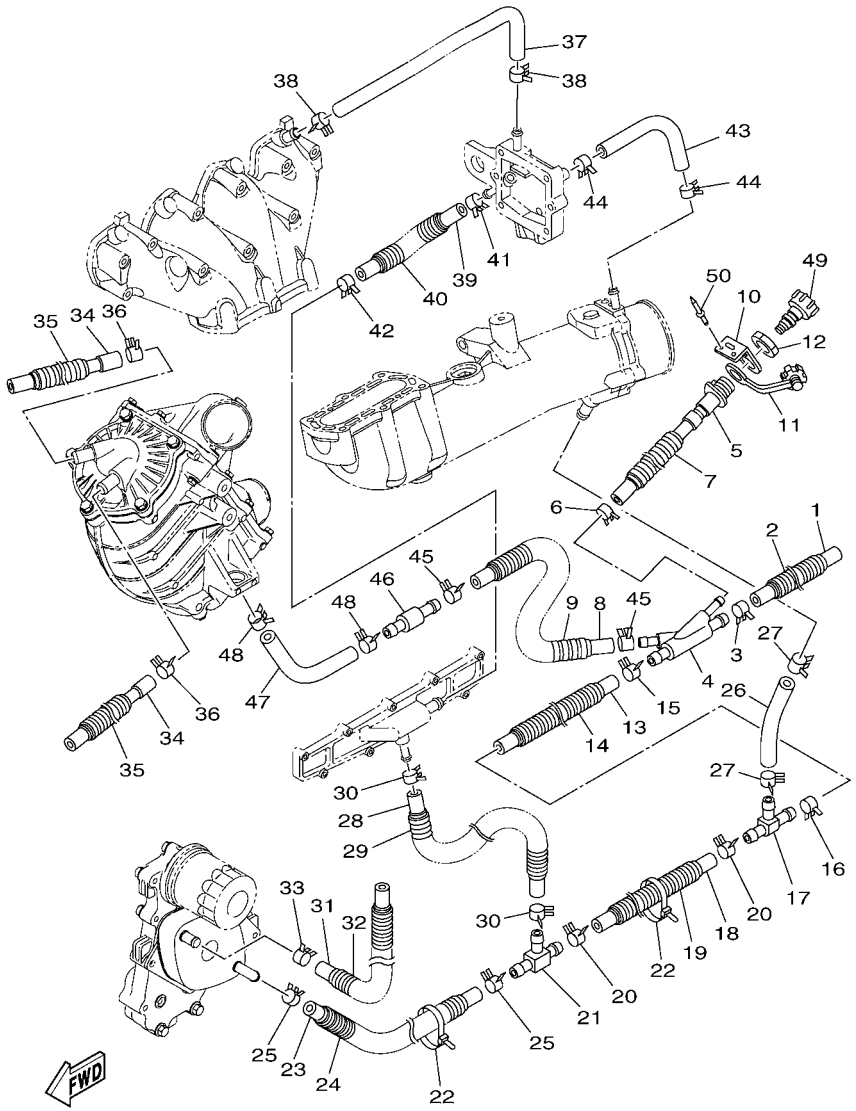


F3K1100-N140

## FIG. 14 EXHAUST 2

| REF. NO. | PART NO. | DESCRIPTION | CAN | EUR | GENE | | | REMARKS |
|---|---|---|---|---|---|---|---|---|
| 28 | 6S5–1244H–00 | HOSE 5 | 1 | 1 | 1 | | | |
| 29 | 90447–19011 | TUBE (L150) | 1 | 1 | 1 | | | |
| 30 | 90467–150A1 | CLIP | 2 | 2 | 2 | | | |
| 31 | 6S5–12588–00 | HOSE 5 | 1 | 1 | 1 | | | |
| 32 | 90447–19006 | HOSE, WITH SPRING (L=630) | 1 | 1 | 1 | | | |
| 33 | 90467–160A0 | CLIP | 1 | 1 | 1 | | | |
| 34 | 6S5–12552–00 | HOSE 8 | 2 | 2 | 2 | | | |
| 35 | 90446–24M89 | HOSE (L420) | 2 | 2 | 2 | | | |
| 36 | 90467–170A4 | CLIP | 2 | 2 | 2 | | | |
| 37 | 6BH–12577–00 | HOSE 2 | 1 | 1 | 1 | | | |
| 38 | 90467–160A0 | CLIP | 2 | 2 | 2 | | | |
| 39 | 6S5–12579–00 | HOSE 4 | 1 | 1 | 1 | | | |
| 40 | 90447–19011 | TUBE (L150) | 1 | 1 | 1 | | | |
| 41 | 90467–160A0 | CLIP | 1 | 1 | 1 | | | |
| 42 | 90467–170A5 | CLIP | 1 | 1 | 1 | | | |
| 43 | 90445–16013 | HOSE (L220) | 1 | 1 | 1 | | | |
| 44 | 90467–160A0 | CLIP | 2 | 2 | 2 | | | |
| 45 | 90467–200A3 | CLIP | 2 | 2 | 2 | | | |
| 46 | 6S5–12594–00 | JOINT, HOSE 4 | 1 | 1 | 1 | | | |
| 47 | 6S5–12576–01 | HOSE 1 | 1 | 1 | 1 | | | |
| 48 | 90467–200A3 | CLIP | 2 | 2 | 2 | | | |
| 49 | 67X–E2590–10 | CONDUCTION ASSY | 1 | 1 | 1 | | | |
| 50 | 90267–489U1 | RIVET,BLIND | 2 | 2 | 2 | | | |

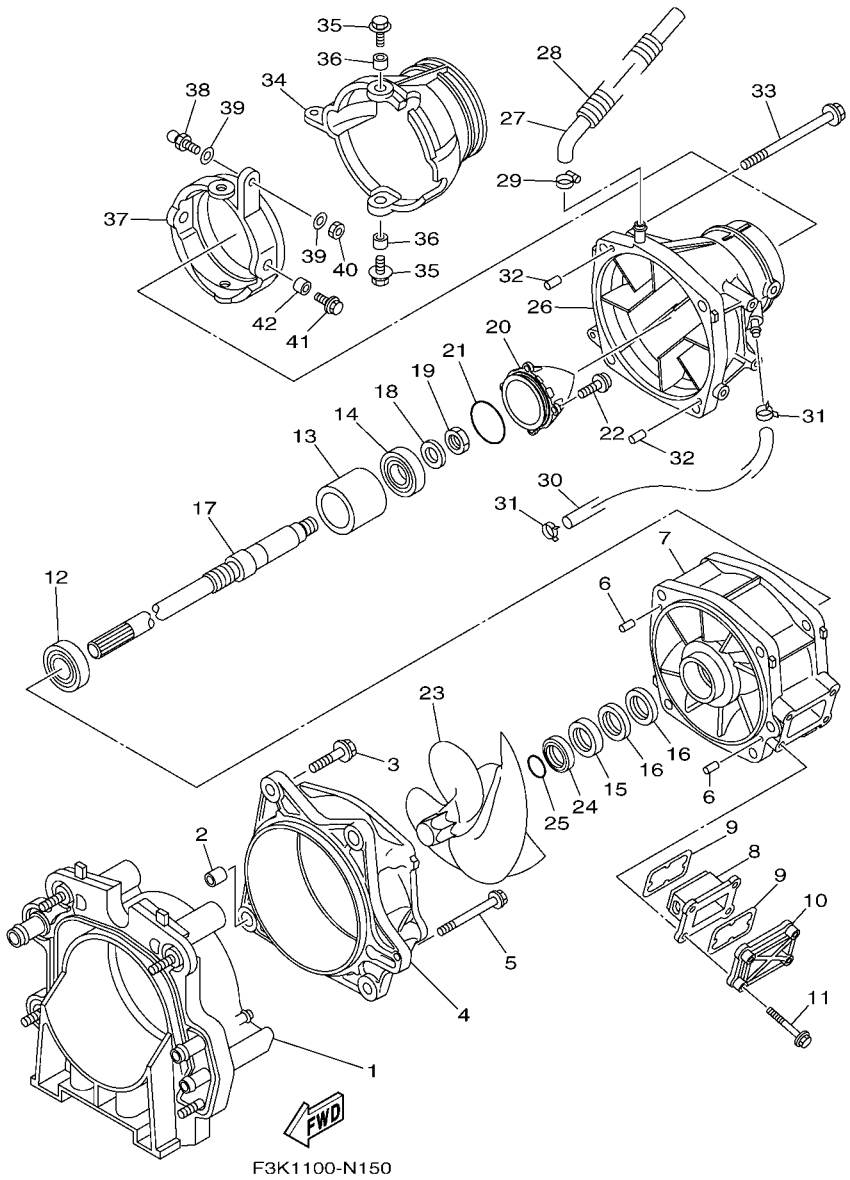


## FIG. 15 JET UNIT 1

| REF. NO. | PART NO. | DESCRIPTION | CAN | EUR | GENE | | | REMARKS |
|---|---|---|---|---|---|---|---|---|
| 1 | 6EV–G5831–00 | PLATE, TRANSOM | 1 | 1 | 1 | | | |
| 2 | 99590–14016 | PIN, DOWEL | 2 | 2 | 2 | | | |
| 3 | 90119–10810 | BOLT, WITH WASHER | 4 | 4 | 4 | | | |
| 4 | 99999–04523 | HOUSING, IMPELLER | 1 | 1 | 1 | | | Go to P/N : PE0-WV-200001 |
| 5 | 90119–06893 | BOLT, WITH WASHER | 1 | 1 | 1 | | | |
| 6 | 93606–12019 | PIN, DOWEL | 2 | 2 | 2 | | | |
| 7 | 6ET–51315–00 | DUCT, IMPELLER | 1 | 1 | 1 | | | |
| 8 | 6ET–G6882–00 | FILTER | 1 | 1 | 1 | | | |
| 9 | 66V–42414–00 | O-RING | 2 | 2 | 2 | | | |
| 10 | 6AN–G5214–00 | COVER, WATER INLET 1 | 1 | 1 | 1 | | | |
| 11 | 90119–06897 | BOLT, WITH WASHER | 4 | 4 | 4 | | | |
| 12 | 93306–20654 | BEARING | 1 | 1 | 1 | | | |
| 13 | 6CS–G5538–00 | SPACER 1 | 1 | 1 | 1 | | | |
| 14 | 93306–30537 | BEARING | 1 | 1 | 1 | | | |
| 15 | 93102–31009 | OIL SEAL | 1 | 1 | 1 | | | |
| 16 | 93101–31001 | OIL SEAL | 2 | 2 | 2 | | | |
| 17 | 6EV–45511–00 | SHAFT, DRIVE | 1 | 1 | 1 | | | |
| 18 | 9290P–20600 | WASHER | 1 | 1 | 1 | | | |
| 19 | 90170–20802 | NUT | 1 | 1 | 1 | | | |
| 20 | 6ET–R1326–00 | CAP | 1 | 1 | 1 | | | |
| 21 | 6S5–5111K–00 | O-RING 1 | 1 | 1 | 1 | | | |
| 22 | 90110–06822 | BOLT, HEXAGON SOCKET HEAD | 4 | 4 | 4 | | | |
| 23 | 6EV–R1321–00 | IMPELLER | 1 | 1 | 1 | | | |
| 24 | 6BH–51348–01 | SPACER | 1 | 1 | 1 | | | |
| 25 | 93210–30611 | O-RING | 1 | 1 | 1 | | | |
| 26 | 6EV–R1318–00 | NOZZLE | 1 | 1 | 1 | | | |
| 27 | 6AN–U72M2–00 | HOSE 1 | 1 | 1 | 1 | | | |

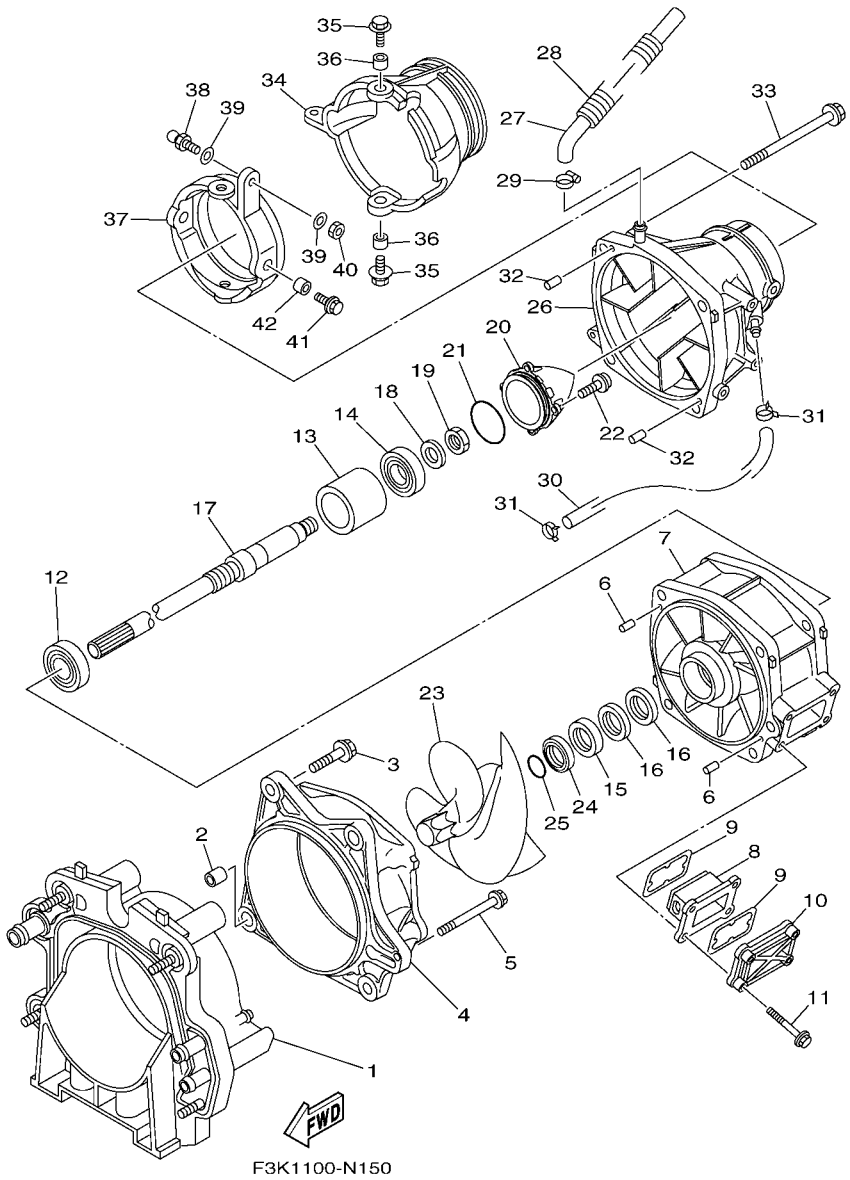


## FIG. 15 JET UNIT 1

| REF. NO. | PART NO. | DESCRIPTION | CAN | EUR | GENE | | | REMARKS |
|---|---|---|---|---|---|---|---|---|
| 28 | 6CN–U773D–00 | TUBE | 1 | 1 | 1 | | | |
| 29 | 90601–118UF | BAND, HOSE 18 | 1 | 1 | 1 | | | |
| 30 | 90445–14804 | HOSE (L330) | 1 | 1 | 1 | | | |
| 31 | 90467–14803 | CLIP | 2 | 2 | 2 | | | |
| 32 | 93606–12019 | PIN, DOWEL | 2 | 2 | 2 | | | |
| 33 | 90119–10806 | BOLT, WITH WASHER | 4 | 4 | 4 | | | |
| 34 | 6S5–R1313–01 | NOZZLE, DEFLECTOR | 1 | 1 | 1 | | | |
| 35 | 90119–08851 | BOLT, WITH WASHER | 2 | 2 | 2 | | | |
| 36 | 90387–08M06 | COLLAR | 2 | 2 | 2 | | | |
| 37 | 6AN–R1190–00 | RING,TRIM | 1 | 1 | 1 | | | |
| 38 | GH3–U146E–00 | STUD, JOINT BALL | 1 | 1 | 1 | | | |
| 39 | 90201–068M4 | WASHER, PLATE | 2 | 2 | 2 | | | |
| 40 | 9538R–06700 | NUT | 1 | 1 | 1 | | | |
| 41 | 90119–08851 | BOLT, WITH WASHER | 2 | 2 | 2 | | | |
| 42 | 90387–08M06 | COLLAR | 2 | 2 | 2 | | | |

# PARTS NEWS

YAMAHA
YAMAHA MOTOR CO., LTD.
2500 SHINGAI IWATA SHIZUOKA JAPAN

News No. PE0-WV-200001

Revise 1 Dec.17.2020

Date:2020/10/21
Signature:T.Ogomori

Cause : ☐ Revision Notice ☐ Correction ☑ Sales Unit Change ☐ Others

| | |
|---|---|
| Model | See the "List of Models and Catalog No's" below. |
| Subject | PART CATALOG CORRECTION |
| CATALOGUE NO. | See the "List of Models and Catalog No's" below. |

1. LIST of Models and Catalog No's.

The applicable MODELS, MODEL CODES, and CATALOG No's are as follows.

| Model Code | Model Name | Model Year | Catalogue No. | FIG. No. | REF. No. |
|---|---|---|---|---|---|
| F3J1/ 2/ 3 | FC1800A-N | 2014 | 1NF3J-100E1/ 110E1 | 15 | 4 |
| F3J4/ 5/ 6 | FC1800-N | 2014 | 1NF3J-100EA/ 110EA | 15 | 4 |
| F3K1/ 2/ 3 | GX1800A-N | 2014 | 1NF3K-100E1/ 110E1 | 15 | 4 |
| F3L1/ 2/ 3 | GX1800-N | 2014 | 1NF3L-100E1/ 110E1 | 15 | 4 |
| F3J7/ 8/ 9 | FC1800A-P | 2015 | 1PF3J-100E1/110E1 | 15 | 4 |
| F3JA/ B/ C | FC1800-P | 2015 | 1PF3J-100EA/ 110EA | 15 | 4 |
| F3K4/ 5/ 6 | GX1800A-P | 2015 | 1PF3K-100E1/ 110E1 | 15 | 4 |
| F3L4/ 5/ 6 | GX1800-P | 2015 | 1PF3L-100E1/ 110E1 | 15 | 4 |
| F3JD/ E/ F | FC1800A-R | 2016 | 1RF3J-100E1/ 110E1 | 15 | 4 |
| F3JG/ H/ J | FC1800-R | 2016 | 1RF3J-100EA/ 110EA | 15 | 4 |
| F3K7/ 8/ 9 | GX1800A-R | 2016 | 1RF3K-100E1/ 110E1 | 15 | 4 |
| F3L7/ 8/ 9 | GX1800-R | 2016 | 1RF3L-100E1/ 110E1 | 15 | 4 |
| F3JK/ L | FC1800A-S | 2017 | 1SF3J-100E1/ 110E1 | 15 | 4 |
| F3JM/ N | FC1800-S | 2017 | 1SF3J-100EA/ 110EA | 15 | 4 |
| F4B1 | RP1800A-S | 2017 | 1SF4B-110E1/ 171E1 | 16 | 3 |
| F4B2 | RP1800B-S | 2017 | 1SF4B-110EA/ 171EA | 16 | 3 |
| F3JP/ R | FC1800B-S | 2017 | 1SF3J-100EK/ 110EK | 15 | 4 |
| F3P1/ 2 | GP1800-S | 2017 | 1SF3P-100E1/ 110E1 | 15 | 4 |
| F3JS/ T | FC1800A-T | 2018 | 1TF3J-100E1/ 110E1 | 15 | 4 |
| F3JU/ V | FC1800-T | 2018 | 1TF3J-100EA/ 110EA | 15 | 4 |
| F3JX | FC1800B-T | 2018 | 1TF3J-100EK/ 110EK | 15 | 4 |
| F3P3/ 4 | GP1800-T | 2018 | 1TF3P-100E1/110E1 | 15 | 4 |
| F4B3 | RP1800A-T | 2018 | 1TF4B-110E1/ 171E1 | 16 | 3 |
| F4B4 | RP1800B-T | 2018 | 1TF4B-110EA/ 171EA | 16 | 3 |
| F3P5 | GP1800-U | 2019 | 1UF3P-100E1/ 110E1 | 15 | 4 |
| F3X1 | FC1800A-U | 2019 | 1UF3X-100E1/ 110E1 | 15 | 4 |
| F3X2 | FC1800-U | 2019 | 1UF3X-100EA/ 110EA | 15 | 4 |
| F3X3 | FC1800B-U | 2019 | 1UF3X-100EK/ 110EK | 15 | 4 |

Thank you very much for your cooperation.

| Parts Manager Check | Service Manager Check | Parts Manager File |
|---|---|---|

YAMAHA MOTOR CO.,LTD
2500 Shingai Iwata Shizuoka 438-8501.Japan
Technical & New Model Info. Gr., YMC.

YAMAHA GENUINE Parts & Accessories

# PARTS NEWS

YAMAHA MOTOR CO., LTD.
2500 SHINGAI IWATA SHIZUOKA JAPAN

Date:2020/10/21

News No.PE0-WV-200001

Signature:T.Ogomori

Cause : ☐ Revision Notice ☐ Correction ☑ Sales Unit Change ☐ Others

| | |
|---|---|
| Model | See the "List of Models and Catalog No's" below. |
| Subject | PART CATALOG CORRECTION |
| CATALOGUE NO. | See the "List of Models and Catalog No's" below. |

**JET UNIT 1** SECTION

2. LIST CORRECTION

| FIG. No. | REF. No. | OLD PART No. | NEW PART No. | PART NAME | QTY | REMARK | *1 | NOTE |
|---|---|---|---|---|---|---|---|---|
| 15 or 16 | 3 or 4 | 6ET-51312-00 | ~~99999-04435~~ 1 99999-04523 | HOUSING, IMPELLER | 1 | | D | Note-1 |

Note-1

●Old HOUSING, IMPELLER are not interchangeable with new HOUSING, IMPELLER 1 99999-04523

●When you exchange old HOUSING, IMPELLER, please exchange in HOUSING, ~~IMPELLER (~~99999-04435).

●*Old parts: DUCT, IMPELLER(6ET-51315-00) is not required when using HOUSING, ~~IMPELLER (~~99999-04435).

●For models prior to the 2017, 4 pieces of BOLT, WITH WASHER (90119-06889) are required to install the new FILTER (6GN-G6882-00) when replacing with new HOUSING, IMPELLER. 1

*1: Interchangeability

| | | |
|---|---|---|
| A | Old Parts → Old Parts<br>New Parts → New Parts | |
| B | Old Parts → Old Parts<br>New Parts → New Parts | |
| C | Old Parts → Old Parts<br>New Parts → New Parts | |
| D | Old Parts → Old Parts<br>New Parts → New Parts | |
| | These parts are interchangeable with a set | |

*Components parts of 1 99999-04523
HOUSING, IMPELLER : ~~99999-04435~~

| No. | PART No. | PART NAME | QTY |
|---|---|---|---|
| 1 | 6HL-R1312-00 | HOUSING, IMPELLER | 1 |
| 2 | 6GN-R1337-00 | SLEEVE, IMPELLER | 1 |
| 3 | 6GN-G6882-00 | FILTER | 1 |
| 4 | 93211-70800 | O-RING | 2 |
| 5 | 90119-10811 | BOLT, WITH WASHER | 4 |
| 6 | 90119-06889 | BOLT, WITH WASHER | 4 |

1

*DUCT,IMPELLER

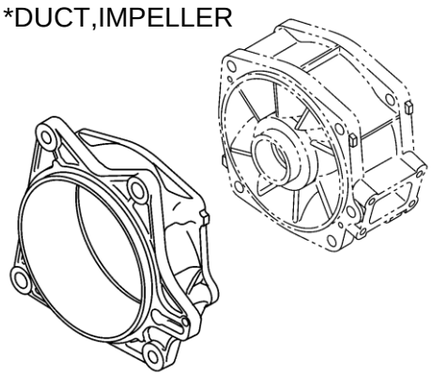

HOUSING,IMPELLER

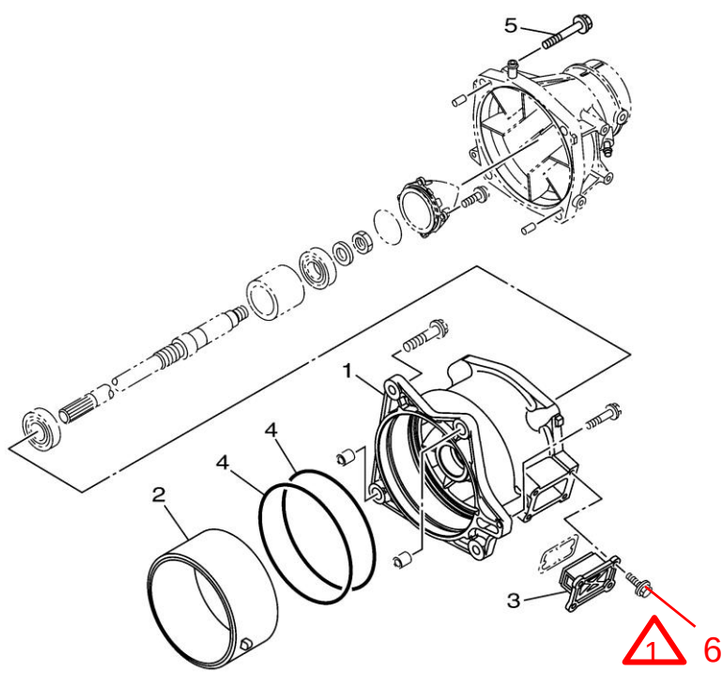


Thank you very much for your cooperation.

| Parts Manager Check | Service Manager Check | Parts Manager File |
|---|---|---|

YAMAHA MOTOR CO.,LTD
2500 Shingai Iwata Shizuoka 438-8501.Japan
Technical & New Model Info. Gr., YMC.

YAMAHA GENUINE Parts & Accessories

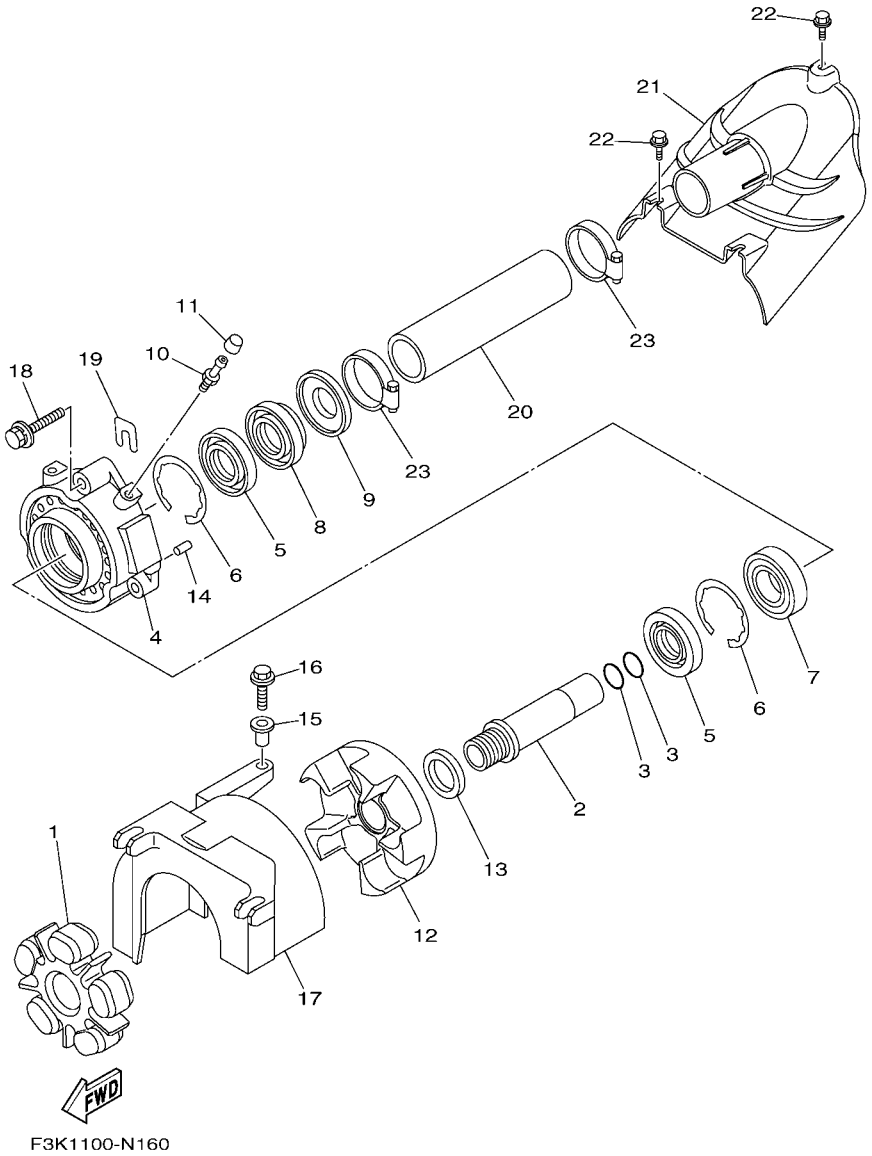


## FIG. 16 JET UNIT 2

| REF. NO. | PART NO. | DESCRIPTION | CAN | EUR | GENE | | | REMARKS |
|---|---|---|---|---|---|---|---|---|
| 1 | 6BH–4581J–00 | RUBBER SHAFT COUPLING | 1 | 1 | 1 | | | |
| 2 | 6S5–51323–00 | SHAFT, COUPLER | 1 | 1 | 1 | | | |
| 3 | 93210–22MF1 | O-RING | 2 | 2 | 2 | | | |
| 4 | 6S5–45332–00–94 | HOUSING, BEARING | 1 | 1 | 1 | | | |
| 5 | 93102–29008 | OIL SEAL | 2 | 2 | 2 | | | |
| 6 | 93450–66156 | CIRCLIP | 2 | 2 | 2 | | | |
| 7 | 93306–20655 | BEARING | 1 | 1 | 1 | | | |
| 8 | 93102–29009 | OIL SEAL | 1 | 1 | 1 | | | |
| 9 | 6ET–45613–00 | WASHER, THRUST | 1 | 1 | 1 | | | |
| 10 | 93700–06M03 | NIPPLE, GREASE | 1 | 1 | 1 | | | |
| 11 | 663–45119–00 | CAP, GREASE NIPPLE | 1 | 1 | 1 | | | |
| 12 | 6S5–45593–00–94 | FLANGE, COUPLING 1 | 1 | 1 | 1 | | | |
| 13 | 6ET–E2289–00 | WASHER | 1 | 1 | 1 | | | |
| 14 | 93606–12019 | PIN, DOWEL | 2 | 2 | 2 | | | |
| 15 | 90387–06289 | COLLAR | 1 | 1 | 1 | | | |
| 16 | 90119–06891 | BOLT, WITH WASHER | 1 | 1 | 1 | | | |
| 17 | 6S5–R1381–01 | COVER | 1 | 1 | 1 | | | |
| 18 | 90119–089UU | BOLT, WITH WASHER | 3 | 3 | 3 | | | |
| 19 | GD0–U7249–00–05 | SHIM (T=0.5) | 2 | 2 | 2 | | | UN |
| 20 | F2C–U883B–00 | PIPE, 1 | 1 | 1 | 1 | | | |
| 21 | F3K–U883E–00 | JOINT, PIPE | 1 | 1 | 1 | | | |
| 22 | 90109–06832 | BOLT | 3 | 3 | 3 | | | |
| 23 | 90601–152U3 | BAND, HOSE 52 | 2 | 2 | 2 | | | |

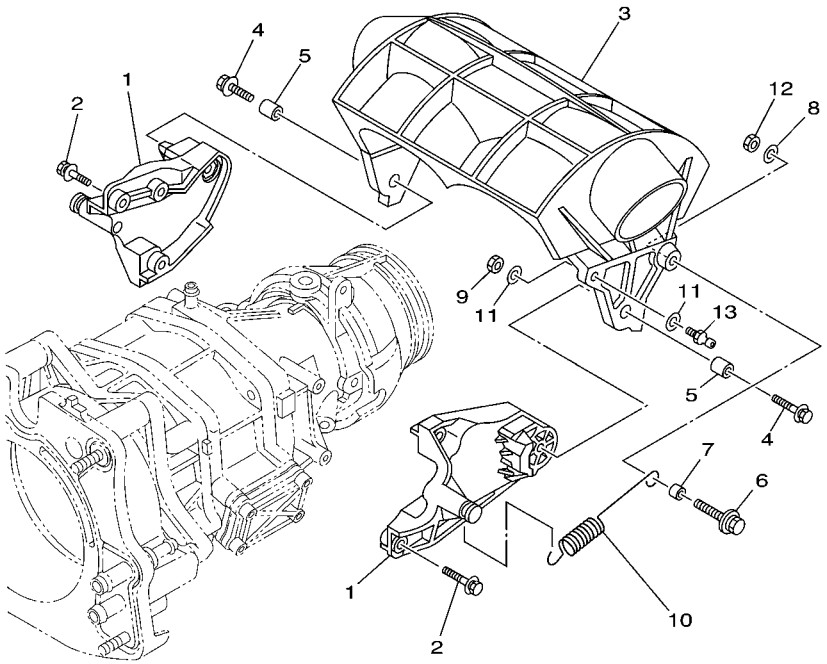


F2S1100-L170

## FIG. 17 JET UNIT 3

| REF. NO. | PART NO. | DESCRIPTION | CAN | EUR | GENE | | | REMARKS |
|---|---|---|---|---|---|---|---|---|
| 1 | 6CS–R1341–00 | BRACKET 1 | 2 | 2 | 2 | | | |
| 2 | 90119–06891 | BOLT, WITH WASHER | 6 | 6 | 6 | | | |
| 3 | 6S5–R1314–02 | GATE, REVERSE | 1 | 1 | 1 | | | |
| 4 | 90119–08840 | BOLT, WITH WASHER | 2 | 2 | 2 | | | |
| 5 | 90387–08M30 | COLLAR | 2 | 2 | 2 | | | |
| 6 | 90119–069UX | BOLT, WITH WASHER | 1 | 1 | 1 | | | |
| 7 | 90387–06M30 | COLLAR | 1 | 1 | 1 | | | |
| 8 | 90201–06801 | WASHER, PLATE | 1 | 1 | 1 | | | |
| 9 | 9538R–06600 | NUT | 1 | 1 | 1 | | | |
| 10 | 6S5–52358–00 | SPRING, RETAINER | 1 | 1 | 1 | | | |
| 11 | 90201–06801 | WASHER, PLATE | 2 | 2 | 2 | | | |
| 12 | 9538R–06600 | NUT | 1 | 1 | 1 | | | |
| 13 | EU0–U1461–02 | STUD, JOINT BALL | 1 | 1 | 1 | | | |

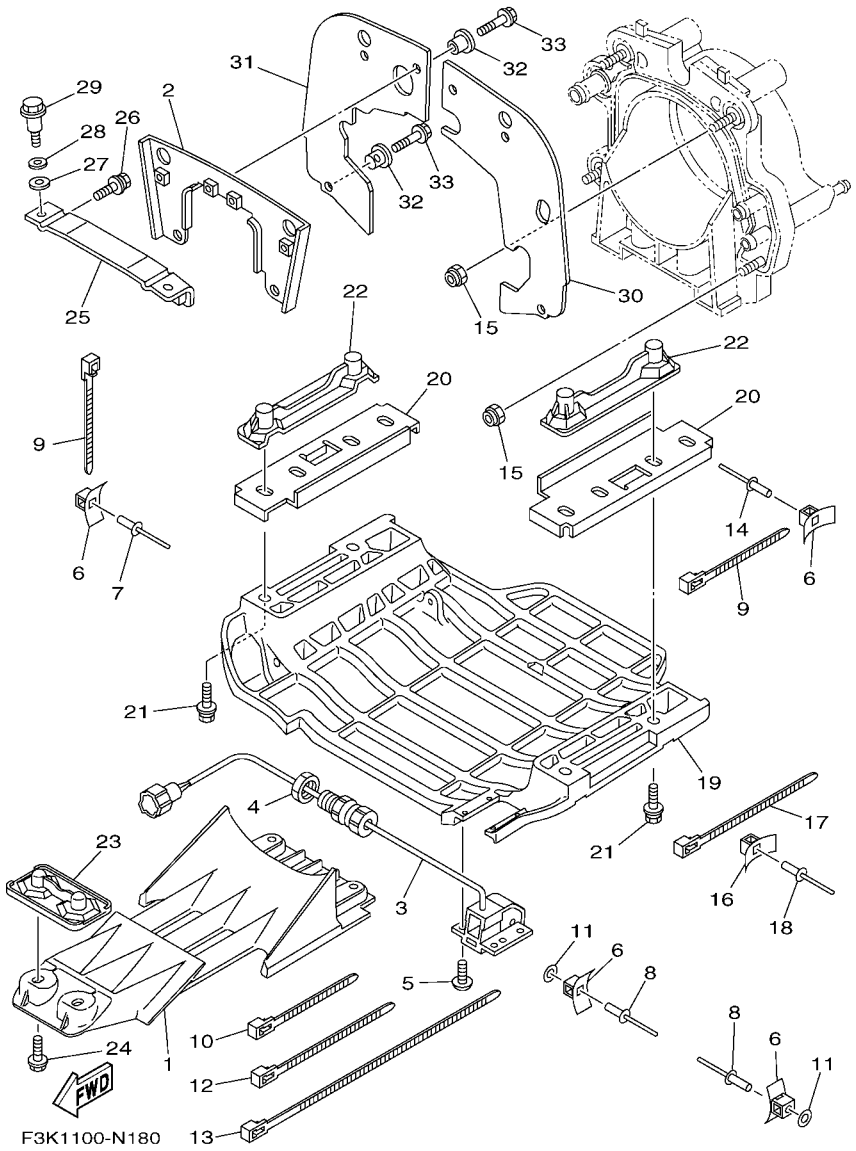


## FIG. 18 JET UNIT 4

| REF. NO. | PART NO. | DESCRIPTION | CAN | EUR | GENE | | | REMARKS |
|---|---|---|---|---|---|---|---|---|
| 1 | 6EV–R1333–00 | SCREEN, INTAKE | 1 | 1 | 1 | | | |
| 2 | 6AN–R1341–01 | BRACKET 1 | 1 | 1 | 1 | | | |
| 3 | F1S–U8K31–02 | SENSOR SPEED | 1 | 1 | 1 | | | |
| 4 | F2C–U151S–00 | NUT | 1 | 1 | 1 | | | |
| 5 | 90150–05807 | SCREW, ROUND HEAD | 4 | 4 | 4 | | | |
| 6 | F1W–U828M–00 | BASE, CLAMP | 11 | 11 | 11 | | | |
| 7 | 90267–48802 | RIVET, BLIND | 4 | 4 | 4 | | | |
| 8 | 90267–489U2 | RIVET, BLIND | 2 | 2 | 2 | | | |
| 9 | 90464–32801 | CLAMP | 8 | 8 | 8 | | | |
| 10 | 90601–200U1 | BAND | 2 | 2 | 2 | | | |
| 11 | 9299R–05200 | WASHER | 2 | 2 | 2 | | | |
| 12 | 90464–32801 | CLAMP | 1 | 1 | 1 | | | |
| 13 | 90464–99801 | CLAMP | 1 | 1 | 1 | | | |
| 14 | 90267–489U6 | RIVET, BLIND | 5 | 5 | 5 | | | |
| 15 | 9572R–10300 | NUT, NYLON | 4 | 4 | 4 | | | |
| 16 | F1W–U828M–00 | BASE, CLAMP | 2 | 2 | 2 | | | |
| 17 | 90464–32801 | CLAMP | 2 | 2 | 2 | | | |
| 18 | 90267–48802 | RIVET, BLIND | 2 | 2 | 2 | | | |
| 19 | F3K–6273B–00 | PLATE 2 | 1 | 1 | 1 | | | |
| 20 | F2C–U143G–00 | SPACER | 2 | 2 | 2 | | | |
| 21 | 90119–08823 | BOLT, WITH WASHER | 4 | 4 | 4 | | | |
| 22 | F1G–U8572–02 | BRACKET 2 | 2 | 2 | 2 | | | |
| 23 | F2C–U8577–03 | BRACKET, 3 | 1 | 1 | 1 | | | |
| 24 | 90119–10808 | BOLT, WITH WASHER | 6 | 6 | 6 | | | |
| 25 | F2C–U7557–01 | BRACKET | 1 | 1 | 1 | | | |
| 26 | 90119–089U7 | BOLT, WITH WASHER | 2 | 2 | 2 | | | |
| 27 | 90430–12002 | GASKET | 2 | 2 | 2 | | | |

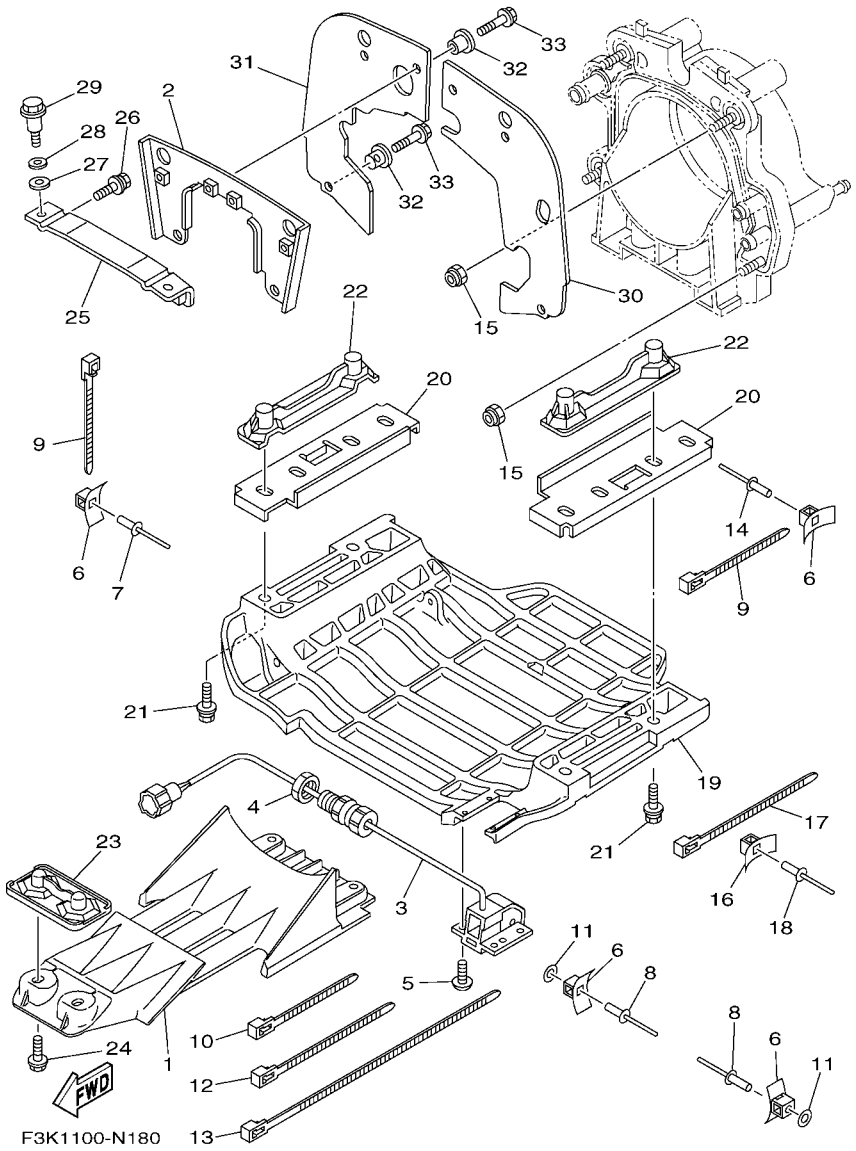


## FIG. 18 JET UNIT 4

| REF. NO. | PART NO. | DESCRIPTION | CAN | EUR | GENE | | | REMARKS |
|---|---|---|---|---|---|---|---|---|
| 28 | 92990–12200 | WASHER, PLAIN | 2 | 2 | 2 | | | |
| 29 | 90109–08041 | BOLT | 2 | 2 | 2 | | | |
| 30 | F3K–U757E–00 | PLATE, RUBBER 1 | 1 | 1 | 1 | | | |
| 31 | F3K–U757F–00 | PLATE, RUBBER 2 | 1 | 1 | 1 | | | |
| 32 | 90387–06080 | COLLAR | 6 | 6 | 6 | | | |
| 33 | 90119–06827 | BOLT, WITH WASHER | 6 | 6 | 6 | | | |

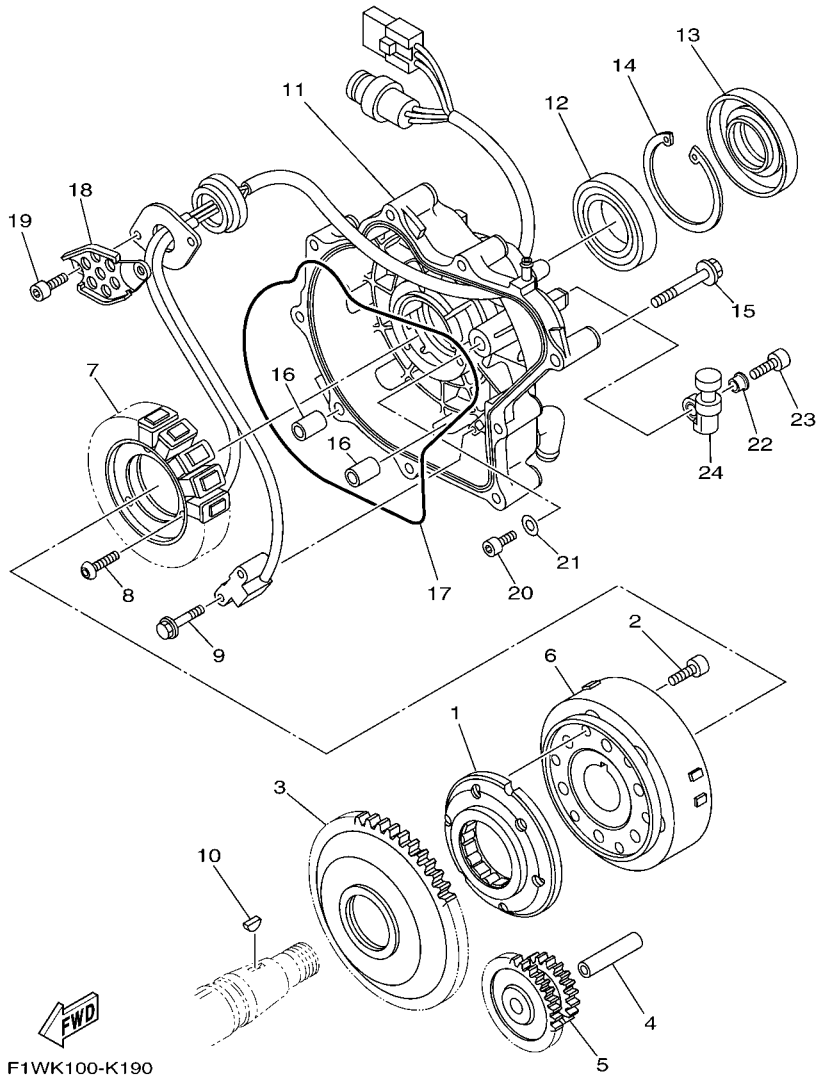


## FIG. 19 GENERATOR

| REF. NO. | PART NO. | DESCRIPTION | CAN | EUR | GENE | | | REMARKS |
|---|---|---|---|---|---|---|---|---|
| 1 | 6S5–15590–00 | STARTER ONE-WAY ASSY | 1 | 1 | 1 | | | |
| 2 | 90110–08212 | BOLT, HEXAGON SOCKET HEAD | 6 | 6 | 6 | | | |
| 3 | 6S5–15515–00 | GEAR 3 | 1 | 1 | 1 | | | |
| 4 | 6S5–15521–00 | SHAFT 1 | 1 | 1 | 1 | | | |
| 5 | 6S5–15517–00 | GEAR, IDLER 2 | 1 | 1 | 1 | | | |
| 6 | 6S5–81450–01 | ROTOR ASSY | 1 | 1 | 1 | | | |
| 7 | 6S5–81410–11 | STATOR ASSY | 1 | 1 | 1 | | | |
| 8 | 90149–06229 | SCREW | 3 | 3 | 3 | | | |
| 9 | 97513–05514 | BOLT, WITH WASHER | 2 | 2 | 2 | | | |
| 10 | 90280–03047 | KEY, WOODRUFF | 1 | 1 | 1 | | | |
| 11 | 6S5–81337–20 | COVER, FLYWHEEL | 1 | 1 | 1 | | | |
| 12 | 93306–00805 | BEARING | 1 | 1 | 1 | | | |
| 13 | 6S5–81167–10 | OIL SEAL | 1 | 1 | 1 | | | |
| 14 | 99009–72500 | CIRCLIP | 1 | 1 | 1 | | | |
| 15 | 90105–08249 | BOLT, FLANGE | 9 | 9 | 9 | | | |
| 16 | 99530–10114 | PIN, DOWEL | 2 | 2 | 2 | | | |
| 17 | 6S5–81168–00 | O-RING | 1 | 1 | 1 | | | |
| 18 | 6S5–81328–00 | CLAMP | 1 | 1 | 1 | | | |
| 19 | 91317–06014 | BOLT | 2 | 2 | 2 | | | |
| 20 | 91317–05010 | BOLT | 1 | 1 | 1 | | | |
| 21 | 90201–052E8 | WASHER, PLATE | 1 | 1 | 1 | | | |
| 22 | 90387–06M05 | COLLAR | 2 | 2 | 2 | | | |
| 23 | 91380–06020 | BOLT | 2 | 2 | 2 | | | |
| 24 | 6S5–81364–10 | GROMMET | 2 | 2 | 2 | | | |

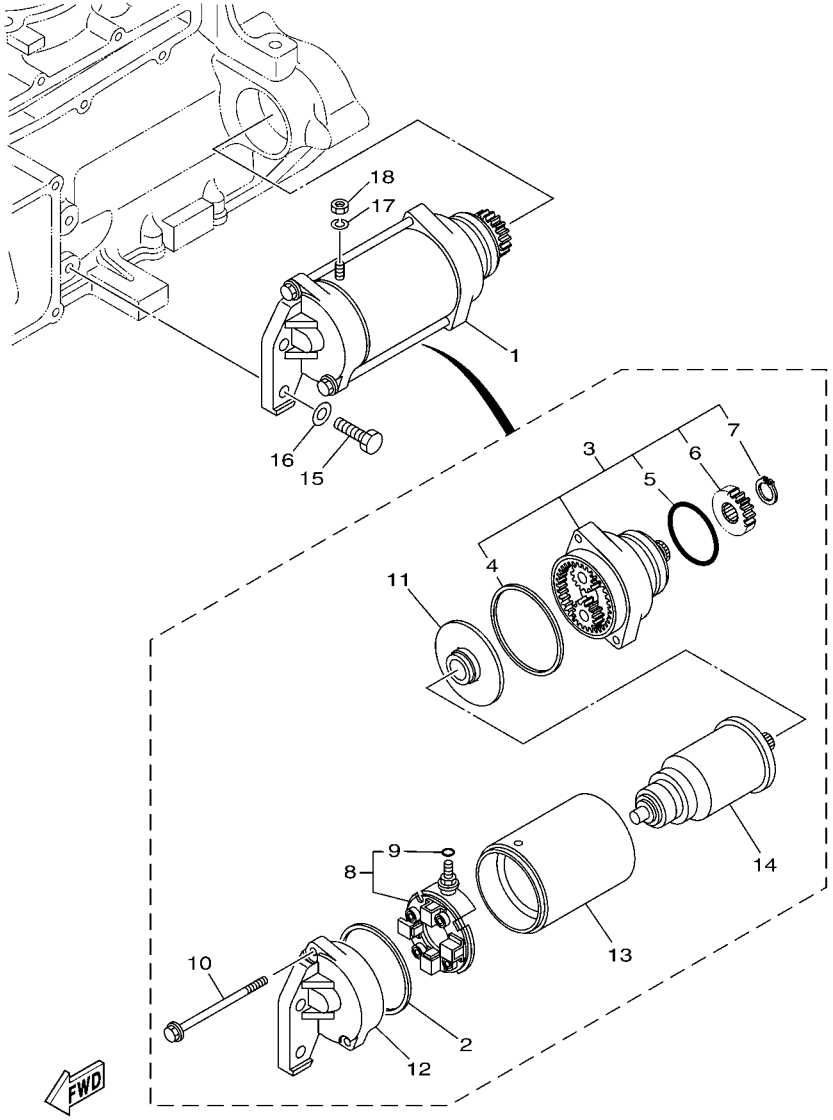


F1W1100-G200

## FIG. 20 STARTING MOTOR

| REF. NO. | PART NO. | DESCRIPTION | CAN | EUR | GENE | | | REMARKS |
|---|---|---|---|---|---|---|---|---|
| 1 | 6S5–81800–00 | STARTING MOTOR ASSY | 1 | 1 | 1 | | | |
| 2 | 11H–81844–00 | .GASKET | 1 | 1 | 1 | | | |
| 3 | 6S5–81830–00 | .FRONT BRACKET ASSY | 1 | 1 | 1 | | | |
| 4 | 4G0–81844–00 | ..GASKET | 1 | 1 | 1 | | | |
| 5 | 1J7–81847–60 | ..O-RING | 1 | 1 | 1 | | | |
| 6 | 5EL–15511–00 | ..GEAR, STARTING MOTOR | 1 | 1 | 1 | | | |
| 7 | 93410–12003 | ..CIRCLIP | 1 | 1 | 1 | | | |
| 8 | 6S5–81840–00 | .BRUSH HOLDER ASSY | 1 | 1 | 1 | | | |
| 9 | 3TB–81847–00 | ..O-RING | 1 | 1 | 1 | | | |
| 10 | 6S5–81826–00 | .BOLT | 2 | 2 | 2 | | | |
| 11 | 5EL–81845–00 | .PLATE | 1 | 1 | 1 | | | |
| 12 | 6S5–81820–00 | .REAR BRACKET ASSY | 1 | 1 | 1 | | | |
| 13 | 6S5–81810–00 | .STATOR ASSY | 1 | 1 | 1 | | | |
| 14 | 5A8–81850–10 | .ARMATURE ASSY | 1 | 1 | 1 | | | |
| 15 | 97013–08030 | BOLT | 2 | 2 | 2 | | | |
| 16 | 92903–08600 | WASHER, PLATE | 2 | 2 | 2 | | | |
| 17 | 92990–06100 | WASHER, SPRING | 1 | 1 | 1 | | | |
| 18 | 95380–06700 | NUT | 1 | 1 | 1 | | | |

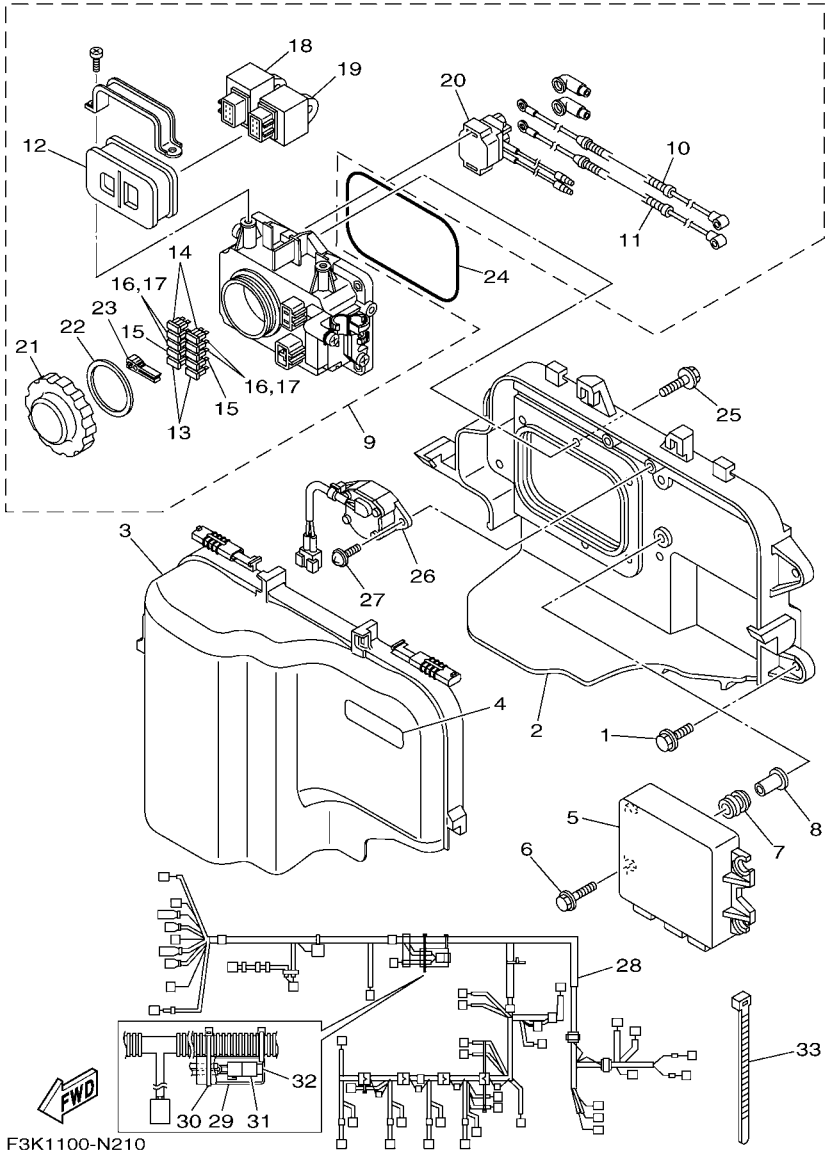


## FIG. 21 ELECTRICAL 1

| REF. NO. | PART NO. | DESCRIPTION | CAN | EUR | GENE | | | REMARKS |
|---|---|---|---|---|---|---|---|---|
| 1 | 90119–089UT | BOLT, WITH WASHER | 4 | 4 | 4 | | | |
| 2 | 6BH–81845–00 | PLATE | 1 | 1 | 1 | | | |
| 3 | 6S5–81942–11 | COVER | 1 | 1 | 1 | | | |
| 4 | 60E–83627–00 | LABEL, CAUTION 7 | 1 | 1 | 1 | | | |
| 5 | 6EV–8591A–00 | ENGINE CONTROL UNIT ASSY | 1 | | 1 | | | FOR CAN, GENE |
| | 6EV–8591A–10 | ENGINE CONTROL UNIT ASSY | | 1 | | | | FOR EUR |
| 6 | 90119–06M35 | BOLT, WITH WASHER | 4 | 4 | 4 | | | |
| 7 | 6A0–82317–00 | DAMPER, IGNITION COIL | 4 | 4 | 4 | | | |
| 8 | 90387–06119 | COLLAR | 4 | 4 | 4 | | | |
| 9 | 6BH–82170–00 | FUSE BOX ASSY | 1 | 1 | 1 | | | |
| 10 | 6S5–82115–00 | .WIRE, PLUS LEAD | 1 | 1 | 1 | | | |
| 11 | 6S5–82117–00 | .WIRE, LEAD | 1 | 1 | 1 | | | |
| 12 | 6D3–82157–00 | .DAMPER | 1 | 1 | 1 | | | |
| 13 | 67F–82151–00 | .FUSE (20A) | 2 | 2 | 2 | | | |
| 14 | 67F–82151–10 | .FUSE (30A) | 2 | 2 | 2 | | | |
| 15 | 67F–82151–30 | .FUSE (3A) | 2 | 2 | 2 | | | |
| 16 | 67F–82151–40 | .FUSE (10A) | 2 | 2 | 2 | | | |
| 17 | 67F–82151–40 | .FUSE (10A) | 2 | 2 | 2 | | | |
| 18 | 60E–81950–00 | .RELAY ASSY | 1 | 1 | 1 | | | |
| 19 | 68V–81950–00 | .RELAY ASSY | 1 | 1 | 1 | | | |
| 20 | 6B6–81940–00 | .STARTER RELAY ASSY | 1 | 1 | 1 | | | |
| 21 | 66V–8132W–00 | .CAP | 1 | 1 | 1 | | | |
| 22 | 66V–81844–00 | .GASKET | 1 | 1 | 1 | | | |
| 23 | 67F–2812A–00 | .PULLER, FUSE | 1 | 1 | 1 | | | |
| 24 | 6BH–81847–00 | O-RING | 1 | 1 | 1 | | | |
| 25 | 90119–06091 | BOLT, WITH WASHER | 6 | 6 | 6 | | | |
| 26 | 6S5–8259E–00 | SWITCH ASSY | 1 | 1 | 1 | | | |

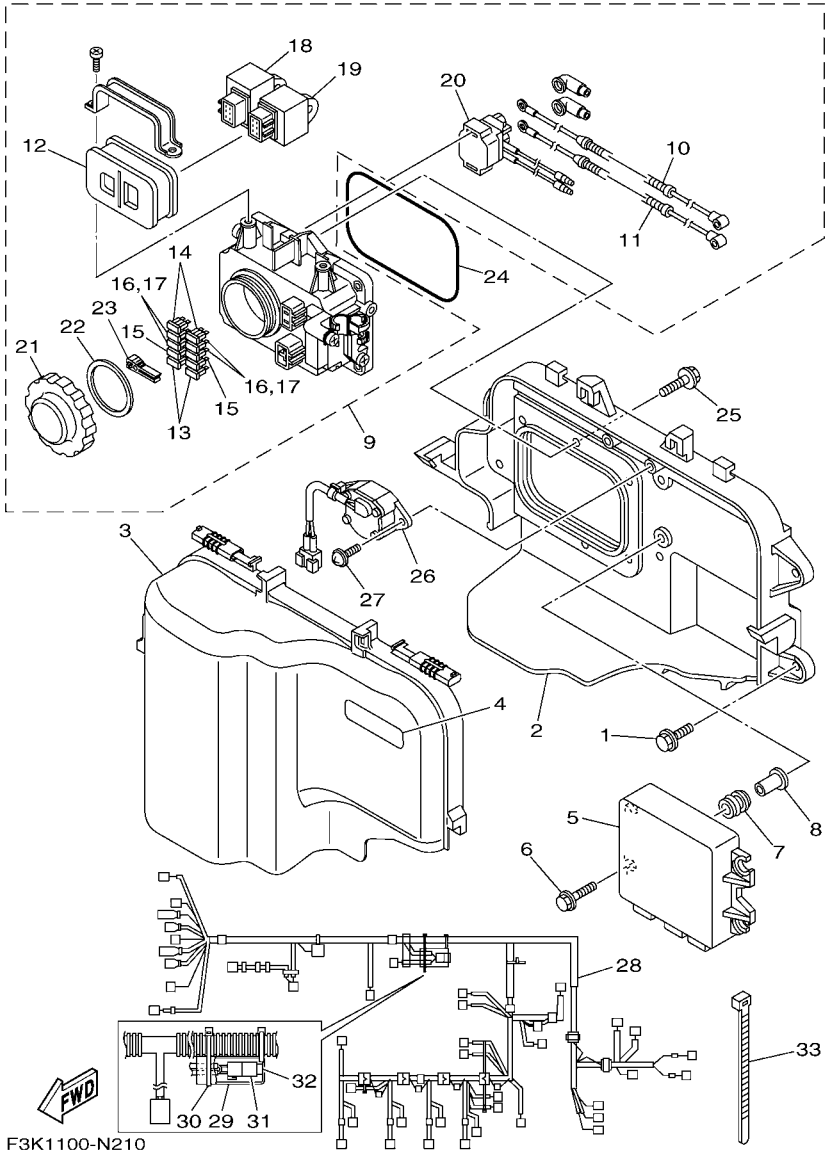


## FIG. 21 ELECTRICAL 1

| REF. NO. | PART NO. | DESCRIPTION | CAN | EUR | GENE | | | REMARKS |
|---|---|---|---|---|---|---|---|---|
| 27 | 97780–60520 | SCREW, TAPPING | 2 | 2 | 2 | | | |
| 28 | 6EV–8259L–00 | WIRE HARNESS ASSY 1 | 1 | 1 | 1 | | | |
| 29 | 4B5–82599–00 | .COVER, CONNECTER | 1 | 1 | 1 | | | |
| 30 | 90465–13M18 | .CLAMP | 1 | 1 | 1 | | | |
| 31 | 67F–82151–30 | .FUSE (3A) | 2 | 2 | 2 | | | |
| 32 | 67F–8215B–00 | .CAP (BLACK) | 1 | 1 | 1 | | | |
| 33 | 90465–14M66 | CLAMP | 2 | 2 | 2 | | | |

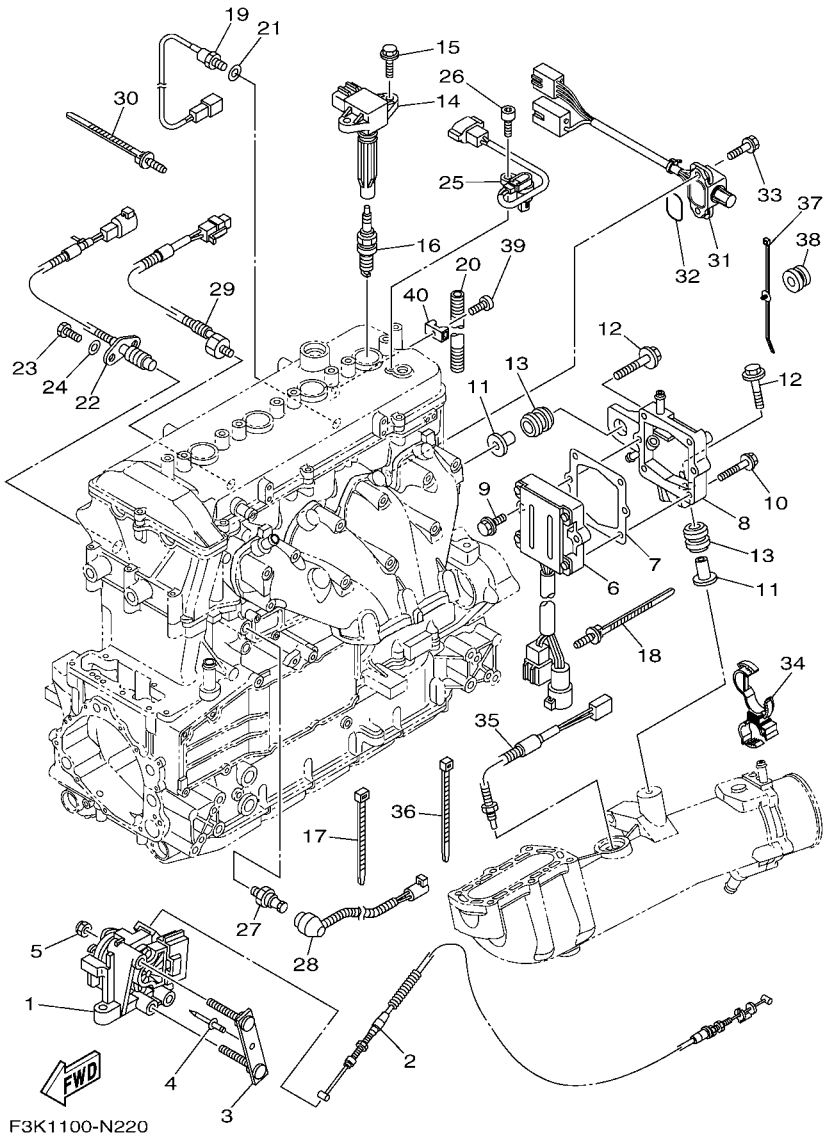


## FIG. 22 ELECTRICAL 2

| REF. NO. | PART NO. | DESCRIPTION | CAN | EUR | GENE | | | REMARKS |
|---|---|---|---|---|---|---|---|---|
| 1 | 6D3–14305–21 | ACCEL. POSITON SENSOR ASSY | 1 | 1 | 1 | | | |
| 2 | 6AN–26311–00 | CABLE, THROTTLE 1 | 1 | 1 | 1 | | | |
| 3 | F2N–U7254–00 | BRACKET, THROTTLE | 1 | 1 | 1 | | | |
| 4 | 90267–489U1 | RIVET,BLIND | 1 | 1 | 1 | | | |
| 5 | 95780–08300 | NUT, FLANGE | 2 | 2 | 2 | | | |
| 6 | 6S5–81960–10 | RECTIFIER & REGULATOR ASSY | 1 | 1 | 1 | | | |
| 7 | 6S5–81975–00 | PLATE, RECTIFIER FITTING | 1 | 1 | 1 | | | |
| 8 | 6S5–81972–01–94 | COVER, RECTIFIER | 1 | 1 | 1 | | | |
| 9 | 90119–06MA3 | BOLT, WITH WASHER | 2 | 2 | 2 | | | |
| 10 | 90119–06048 | BOLT, WITH WASHER | 4 | 4 | 4 | | | |
| 11 | 90387–08M37 | COLLAR | 2 | 2 | 2 | | | |
| 12 | 90119–08M22 | BOLT, WITH WASHER | 2 | 2 | 2 | | | |
| 13 | 90480–22M15 | GROMMET | 2 | 2 | 2 | | | |
| 14 | 6S5–82310–00 | IGNITION COIL ASSY | 4 | 4 | 4 | | | |
| 15 | 90105–06903 | BOLT, FLANGE | 8 | 8 | 8 | | | |
| 16 | 94702–00435 | PLUG, SPARK (NGK LFR7A) | 4 | 4 | 4 | | | |
| 17 | 90465–13M18 | CLAMP | 8 | 8 | 8 | | | |
| 18 | 90464–31001 | CLAMP | 1 | 1 | 1 | | | |
| 19 | 61A–85790–00 | THERMOSENSOR ASSY | 1 | 1 | 1 | | | |
| 20 | 90446–10MH3 | HOSE (L350) | 1 | 1 | 1 | | | |
| 21 | 92990–10600 | WASHER, PLATE | 1 | 1 | 1 | | | |
| 22 | 60E–82560–01 | THERMO SWITCH ASSY | 1 | 1 | 1 | | | |
| 23 | 97095–06016 | BOLT | 2 | 2 | 2 | | | |
| 24 | 92995–06600 | WASHER | 2 | 2 | 2 | | | |
| 25 | 60E–85896–00 | SENSOR, CAM POSITION | 1 | 1 | 1 | | | |
| 26 | 91380–06016 | BOLT | 1 | 1 | 1 | | | |
| 27 | 68V–82504–00 | OIL PRESSURE SWITCH ASSY | 1 | 1 | 1 | | | |

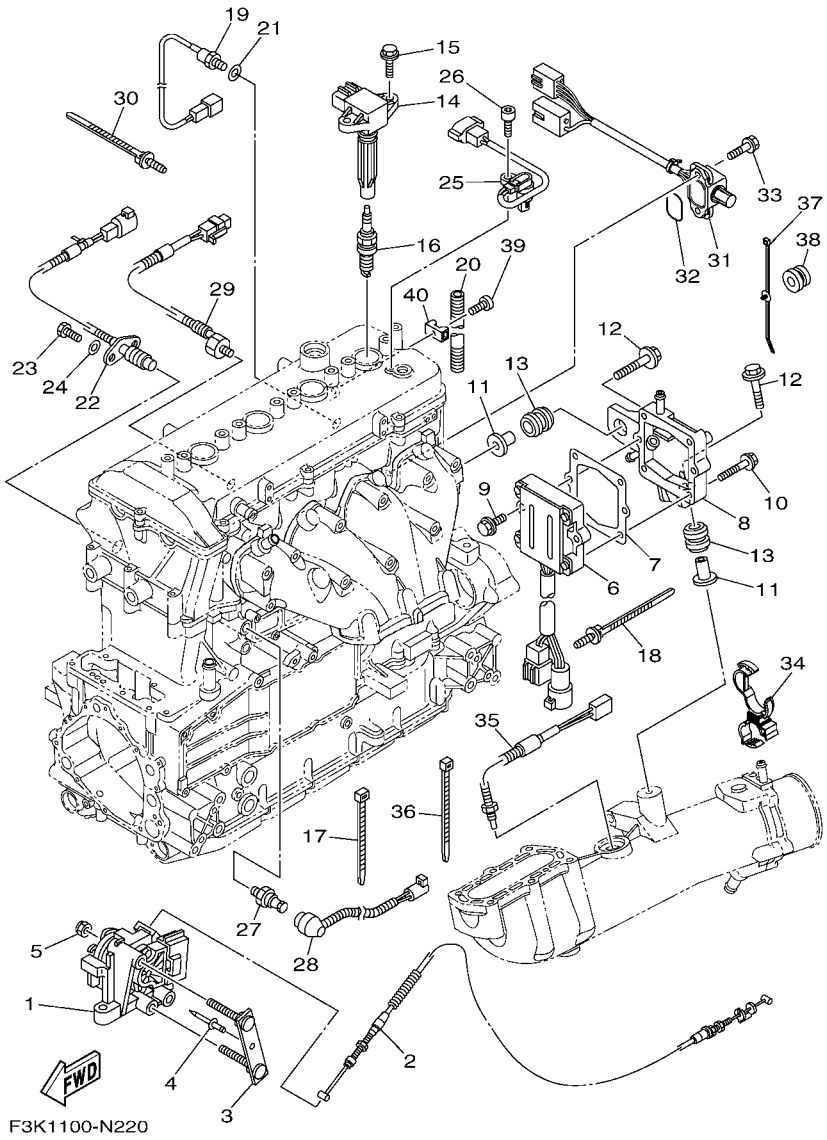


## FIG. 22 ELECTRICAL 2

| REF. NO. | PART NO. | DESCRIPTION | CAN | EUR | GENE | | | REMARKS |
|---|---|---|---|---|---|---|---|---|
| 28 | 6S5–81315–00 | LEAD WIRE ASSY | 1 | 1 | 1 | | | |
| 29 | 6AN–85780–00 | SENSOR, KNOCK | 1 | 1 | 1 | | | |
| 30 | 90464–31001 | CLAMP | 1 | 1 | 1 | | | |
| 31 | 6CS–8273J–00 | EARTH PLATE COMP. | 1 | 1 | 1 | | | |
| 32 | 93210–32172 | O-RING | 1 | 1 | 1 | | | |
| 33 | 90119–06MA3 | BOLT, WITH WASHER | 2 | 2 | 2 | | | |
| 34 | 90464–20008 | CLAMP | 1 | 1 | 1 | | | |
| 35 | 6AA–85790–00 | THERMOSENSOR ASSY | 1 | 1 | 1 | | | |
| 36 | 90464–31001 | CLAMP | 1 | 1 | 1 | | | |
| 37 | 90464–31002 | CLAMP | 1 | 1 | 1 | | | |
| 38 | 90480–20132 | GROMMET | 1 | 1 | 1 | | | |
| 39 | 92014–06012 | BOLT, BUTTON HEAD | 1 | 1 | 1 | | | |
| 40 | 60E–1244E–00 | BRACKET 1 | 1 | 1 | 1 | | | |

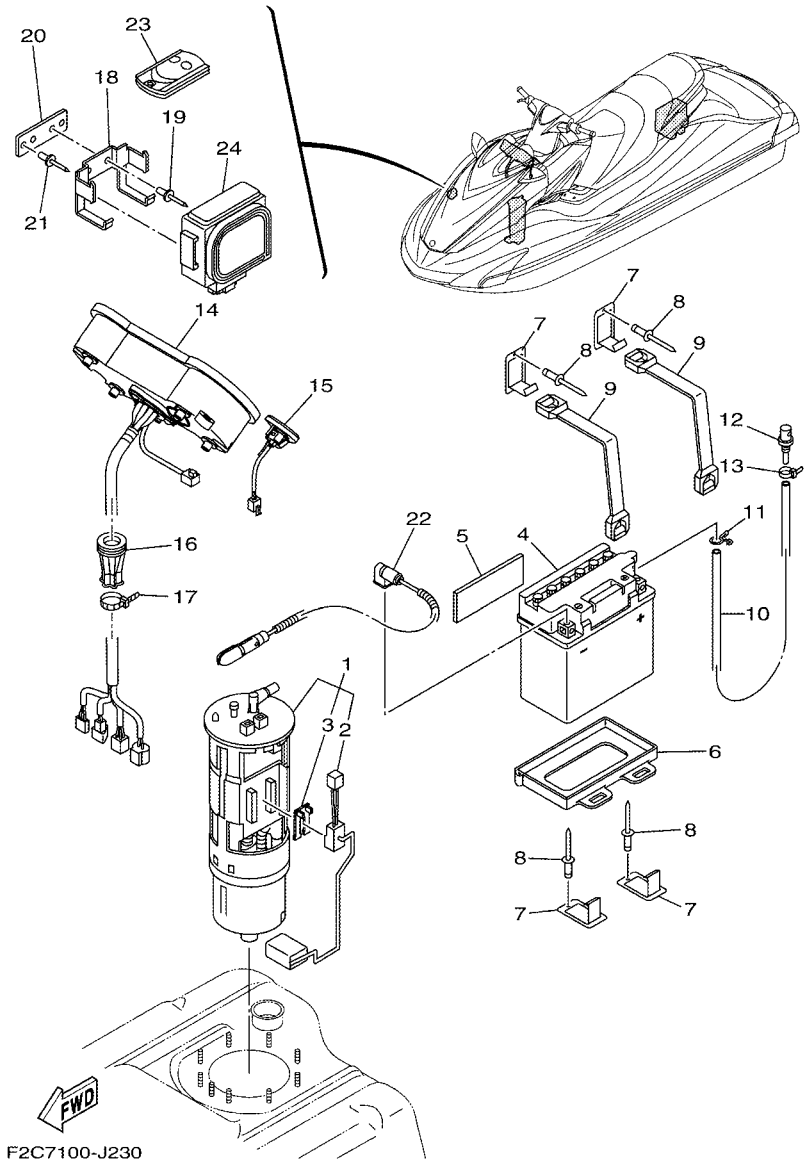


## FIG. 23 ELECTRICAL 3

| REF. NO. | PART NO. | DESCRIPTION | CAN | EUR | GENE | | | REMARKS |
|---|---|---|---|---|---|---|---|---|
| 1 | 6S5–13907–00 | FUEL PUMP COMP. | 1 | 1 | 1 | | | |
| 2 | 6S5–682E0–00 | .FUEL SENDER ASSY | 1 | 1 | 1 | | | |
| 3 | 60E–82556–00 | .DAMPER, STOPPER | 1 | 1 | 1 | | | |
| 4 | EU0–82110–09 | BATTERY ASSY (YB16CL-B) | 1 | 1 | 1 | | | YUASA |
| 5 | F1K–U8221–00 | PAD, BATTERY | 1 | 1 | 1 | | | |
| 6 | F1K–U8211–01 | CASE, BATTERY | 1 | 1 | 1 | | | |
| 7 | F1K–U5772–04 | HOOK A | 4 | 4 | 4 | | | |
| 8 | 90267–489U1 | RIVET,BLIND | 4 | 4 | 4 | | | |
| 9 | F1K–U821D–01 | BAND, BATTERY 1 | 2 | 2 | 2 | | | |
| 10 | F0D–U785G–10 | HOSE, AIR VENT | 1 | 1 | 1 | | | |
| 11 | 90467–089U1 | CLIP | 1 | 1 | 1 | | | |
| 12 | GJ3–6215F–00 | NIPPLE | 1 | 1 | 1 | | | |
| 13 | 90465–11829 | CLAMP | 1 | 1 | 1 | | | |
| 14 | F2C–6820A–10 | METER ASSY | 1 | 1 | 1 | | | |
| 15 | F2C–68090–00 | SWITCH ASSY. | 1 | 1 | 1 | | | |
| 16 | F1X–U822E–00 | GROMMET | 1 | 1 | 1 | | | |
| 17 | 90601–200U1 | BAND | 1 | 1 | 1 | | | |
| 18 | F1W–U826C–00 | BRACKET | 1 | 1 | 1 | | | |
| 19 | 90267–489U1 | RIVET,BLIND | 2 | 2 | 2 | | | |
| 20 | F1W–U8376–00 | PLATE | 1 | 1 | 1 | | | |
| 21 | 90267–489U1 | RIVET,BLIND | 2 | 2 | 2 | | | |
| 22 | 6S5–82116–00 | WIRE, MINUS LEAD | 1 | 1 | 1 | | | |
| 23 | 6B6–86261–00 | TRANSMITTER COMP | 2 | | | | | FOR CAN |
| | 6B6–86261–10 | TRANSMITTER COMP | | 2 | 2 | | | FOR EUR, GENE |
| 24 | 6B6–86265–00 | RECIVER COMP | 1 | | | | | FOR CAN |
| | 6B6–86265–10 | RECIVER COMP | | 1 | 1 | | | FOR EUR, GENE |

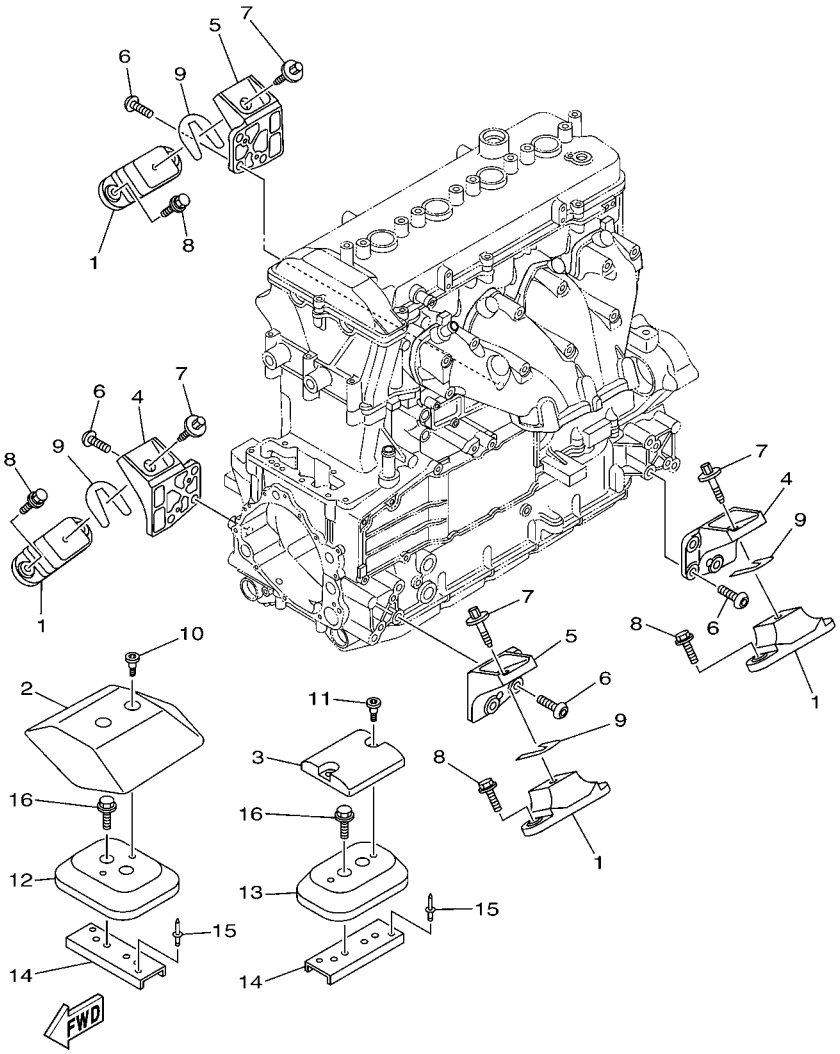


## FIG. 24 ENGINE MOUNT

| REF. NO. | PART NO. | DESCRIPTION | CAN | EUR | GENE | | | REMARKS |
|---|---|---|---|---|---|---|---|---|
| 1 | 67X–44517–10 | MOUNT RUBBER | 4 | 4 | 4 | | | |
| 2 | 6BH–G4532–00 | STOPPER, UPPER MOUNT | 1 | 1 | 1 | | | |
| 3 | 6BH–G4574–00 | STOPPER, LOWER MOUNT RUBBER | 1 | 1 | 1 | | | |
| 4 | 6BH–41661–00–94 | BRACKET 1 | 2 | 2 | 2 | | | |
| 5 | 6BH–41662–00–94 | BRACKET 2 | 2 | 2 | 2 | | | |
| 6 | 90149–10052 | SCREW | 12 | 12 | 12 | | | |
| 7 | 90119–08859 | BOLT, WITH WASHER | 4 | 4 | 4 | | | |
| 8 | 90119–08823 | BOLT, WITH WASHER | 8 | 8 | 8 | | | |
| 9 | EU0–U7354–00–01 | SHIM (T=0.1) | 10 | 10 | 10 | | | UN |
| | EU0–U7354–00–03 | SHIM (T=0.3) | 10 | 10 | 10 | | | UN |
| | EU0–U7354–00–05 | SHIM (T=0.5) | 10 | 10 | 10 | | | UN |
| | EU0–U7354–00–10 | SHIM (T=1.0) | 10 | 10 | 10 | | | UN |
| | EU0–U7354–00–20 | SHIM (T=2.0) | 10 | 10 | 10 | | | UN |
| 10 | 90109–06874 | BOLT | 2 | 2 | 2 | | | |
| 11 | 90109–06875 | BOLT | 2 | 2 | 2 | | | |
| 12 | F2C–U721B–00 | SPACER,ENGINE MOUNT | 1 | 1 | 1 | | | |
| 13 | F2C–U721B–10 | SPACER,ENGINE MOUNT | 1 | 1 | 1 | | | |
| 14 | F2N–U732B–10 | PLATE | 2 | 2 | 2 | | | |
| 15 | 90267–489U2 | RIVET, BLIND | 4 | 4 | 4 | | | |
| 16 | 90119–06891 | BOLT, WITH WASHER | 4 | 4 | 4 | | | |

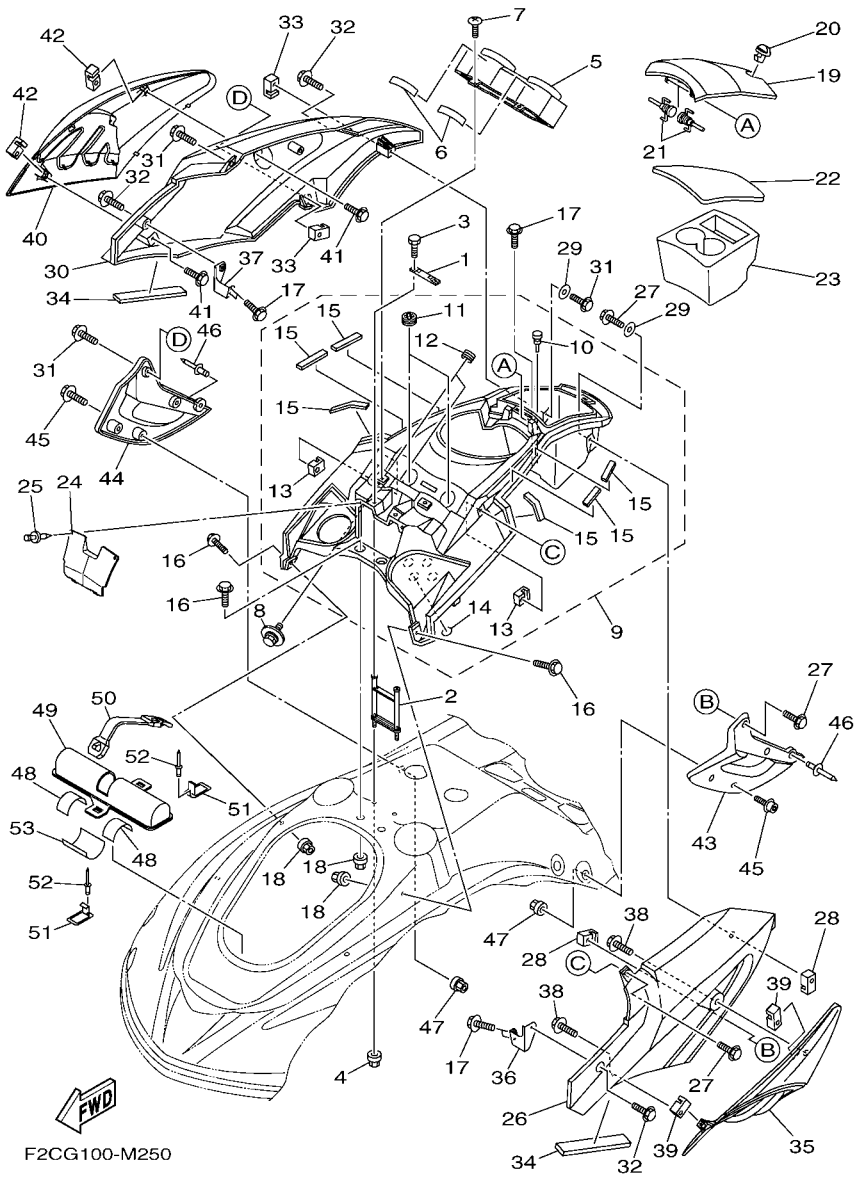


## FIG. 25 ENGINE HATCH 1

| REF. NO. | PART NO. | DESCRIPTION | CAN | EUR | GENE | | | REMARKS |
|---|---|---|---|---|---|---|---|---|
| 1 | F1W–U517F–00 | HOOK,LID LOCK | 1 | 1 | 1 | | | |
| 2 | F1W–U555D–02 | BRKT., COVER CENTER 1 | 1 | 1 | 1 | | | |
| 3 | 90101–05800 | BOLT | 2 | 2 | 2 | | | |
| 4 | F2N–U142L–00 | NUT, LOCK | 2 | 2 | 2 | | | |
| 5 | F2C–U82AA–00 | METER COVER ASSY. | 1 | 1 | 1 | | | |
| 6 | F0X–U515E–01 | DAMPER 2 | 2 | 2 | 2 | | | |
| 7 | 90149–05903 | SCREW | 2 | 2 | 2 | | | |
| 8 | 90119–05803 | BOLT, WITH WASHER | 4 | 4 | 4 | | | |
| 9 | F2C–U5508–02 | CENTER COVER ASSY. | 1 | 1 | 1 | | | |
| 10 | 90605–502U2 | .PLUG | 1 | 1 | 1 | | | |
| 11 | F1X–U828E–01 | .DAMPER 1 | 2 | 2 | 2 | | | |
| 12 | 90480–19800 | .GROMMET | 4 | 4 | 4 | | | |
| 13 | F1X–U517E–01 | .NUT | 2 | 2 | 2 | | | |
| 14 | F2R–U884B–00 | .SEAL 1 | 4 | 4 | 4 | | | |
| 15 | F0X–U515E–01 | .DAMPER 2 | 6 | 6 | 6 | | | |
| 16 | 90119–06880 | BOLT, WITH WASHER | 4 | 4 | 4 | | | |
| 17 | 90119–06882 | BOLT, WITH WASHER | 5 | 5 | 5 | | | |
| 18 | F2N–U142L–00 | NUT, LOCK | 4 | 4 | 4 | | | |
| 19 | F2C–U517H–01 | LID HATCH | 1 | 1 | 1 | | | |
| 20 | GU2–62875–02 | LOCK | 1 | 1 | 1 | | | |
| 21 | F1B–6517R–00 | PIN, HINGE | 2 | 2 | 2 | | | |
| 22 | F2C–U519D–01 | PACKING CASE | 1 | 1 | 1 | | | |
| 23 | F2C–U5633–00 | HOLDER, DRINK | 1 | 1 | 1 | | | |
| 24 | F1W–U555B–00 | SEAL, COVER CENTER | 1 | 1 | 1 | | | |
| 25 | F1W–U2698–00 | RIVET | 2 | 2 | 2 | | | |
| 26 | F2C–U377B–02–P5 | COVER,SIDE 1 (RYM4) | 1 | 1 | 1 | | | FOR YELLOW |
| | F2C–U377B–02–P7 | COVER,SIDE 1 (YRM2) | 1 | 1 | 1 | | | FOR BLACK |

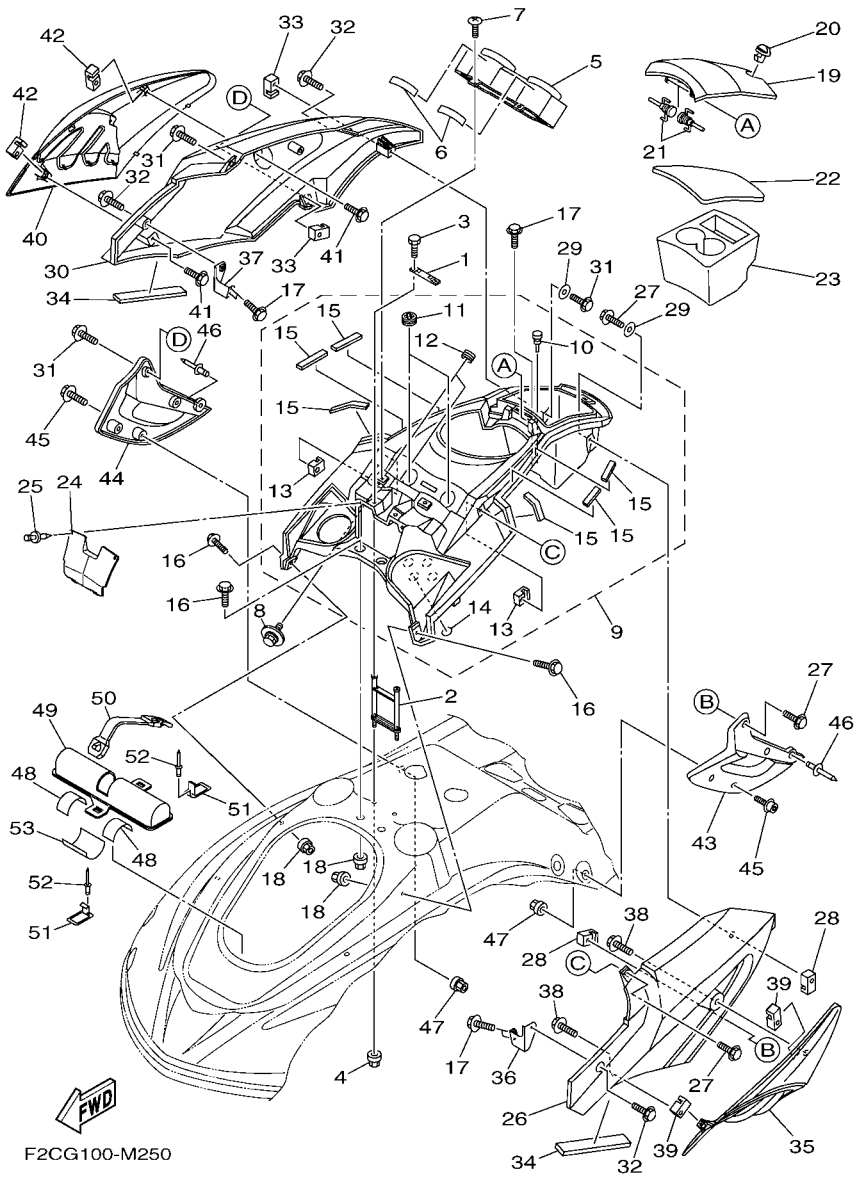


## FIG. 25 ENGINE HATCH 1

| REF. NO. | PART NO. | DESCRIPTION | CAN | EUR | GENE | | | REMARKS |
|---|---|---|---|---|---|---|---|---|
| 27 | 90119–06880 | BOLT, WITH WASHER | 3 | 3 | 3 | | | |
| 28 | F1X–U517E–01 | NUT | 2 | 2 | 2 | | | |
| 29 | 90201–068G7 | WASHER, PLATE | 2 | 2 | 2 | | | |
| 30 | F2C–U377C–02–P5 | COVER,SIDE 2 (RYM4) | 1 | 1 | 1 | | | FOR YELLOW |
| | F2C–U377C–02–P7 | COVER,SIDE 2 (YRM2) | 1 | 1 | 1 | | | FOR BLACK |
| 31 | 90119–06880 | BOLT, WITH WASHER | 3 | 3 | 3 | | | |
| 32 | 90119–06882 | BOLT, WITH WASHER | 3 | 3 | 3 | | | |
| 33 | F1X–U517E–01 | NUT | 2 | 2 | 2 | | | |
| 34 | F2C–U515D–00 | DAMPER 1 | 2 | 2 | 2 | | | |
| 35 | F2C–U517W–00 | ORNAMENT, LH | 1 | 1 | 1 | | | |
| 36 | F2C–U377M–00 | BRKT., COVER SIDE 1 | 1 | 1 | 1 | | | |
| 37 | F2C–U377N–00 | BRKT, COVER SIDE 2 | 1 | 1 | 1 | | | |
| 38 | 90119–06880 | BOLT, WITH WASHER | 2 | 2 | 2 | | | |
| 39 | F1X–U517E–01 | NUT | 2 | 2 | 2 | | | |
| 40 | F2C–U517X–00 | ORNAMENT, RH | 1 | 1 | 1 | | | |
| 41 | 90119–06880 | BOLT, WITH WASHER | 2 | 2 | 2 | | | |
| 42 | F1X–U517E–01 | NUT | 2 | 2 | 2 | | | |
| 43 | F2C–U353B–20 | PAD, KNEE | 1 | 1 | 1 | | | |
| 44 | F2C–U353B–30 | PAD, KNEE | 1 | 1 | 1 | | | |
| 45 | 90110–06823 | BOLT, HEXAGON SOCKET HEAD | 6 | 6 | 6 | | | |
| 46 | 90267–48807 | RIVET, BLIND | 2 | 2 | 2 | | | |
| 47 | F2N–U142L–00 | NUT, LOCK | 6 | 6 | 6 | | | |
| 48 | F1K–U759C–00 | MAT 2 | 2 | 2 | 2 | | | |
| 49 | F1K–U5983–01 | BOX, FIRE EXTINGUISHER | 1 | 1 | 1 | | | |
| 50 | F2P–U828K–00 | BAND 1 | 1 | 1 | 1 | | | |
| 51 | F1K–U5772–04 | HOOK A | 2 | 2 | 2 | | | |
| 52 | 90267–489U1 | RIVET,BLIND | 2 | 2 | 2 | | | |

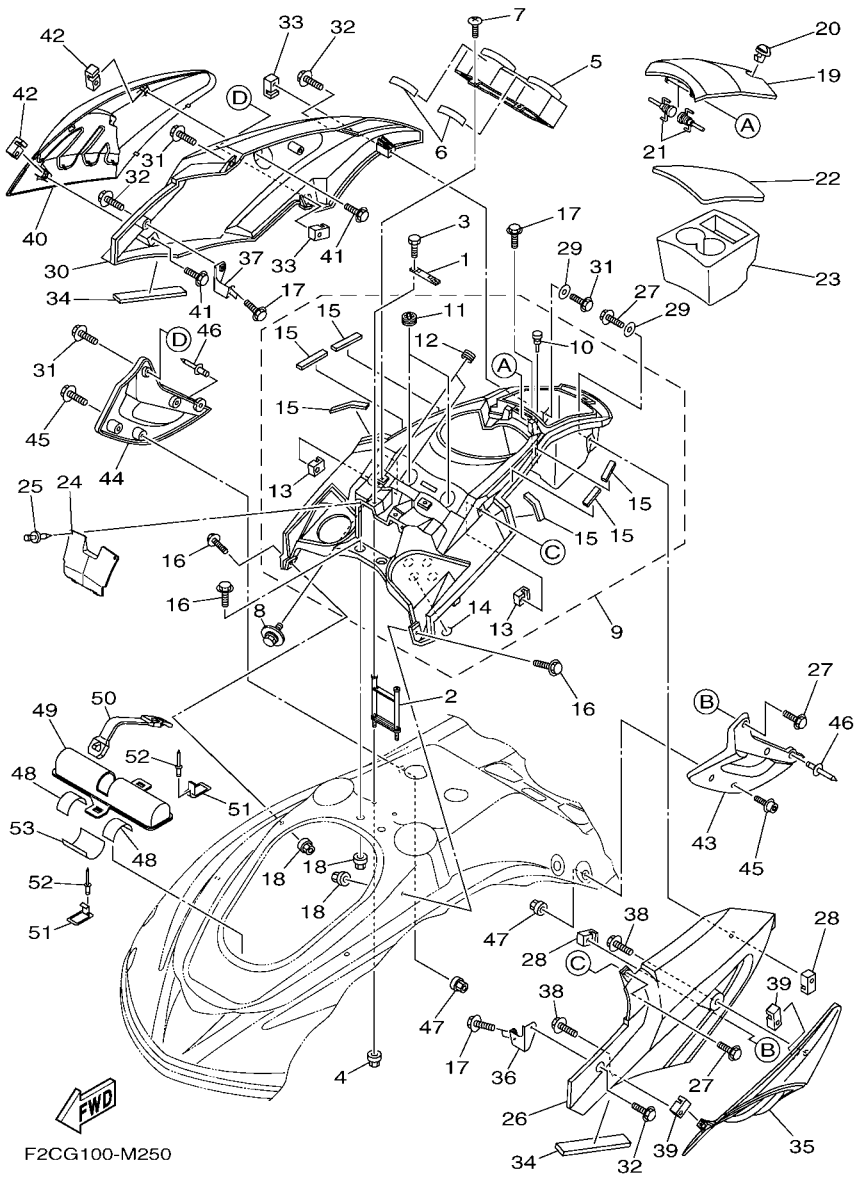


## FIG. 25 ENGINE HATCH 1

| REF. NO. | PART NO. | DESCRIPTION | CAN | EUR | GENE | | | REMARKS |
|---|---|---|---|---|---|---|---|---|
| 53 | F1S–U8221–00 | PAD, BATTERY | 1 | 1 | 1 | | | |

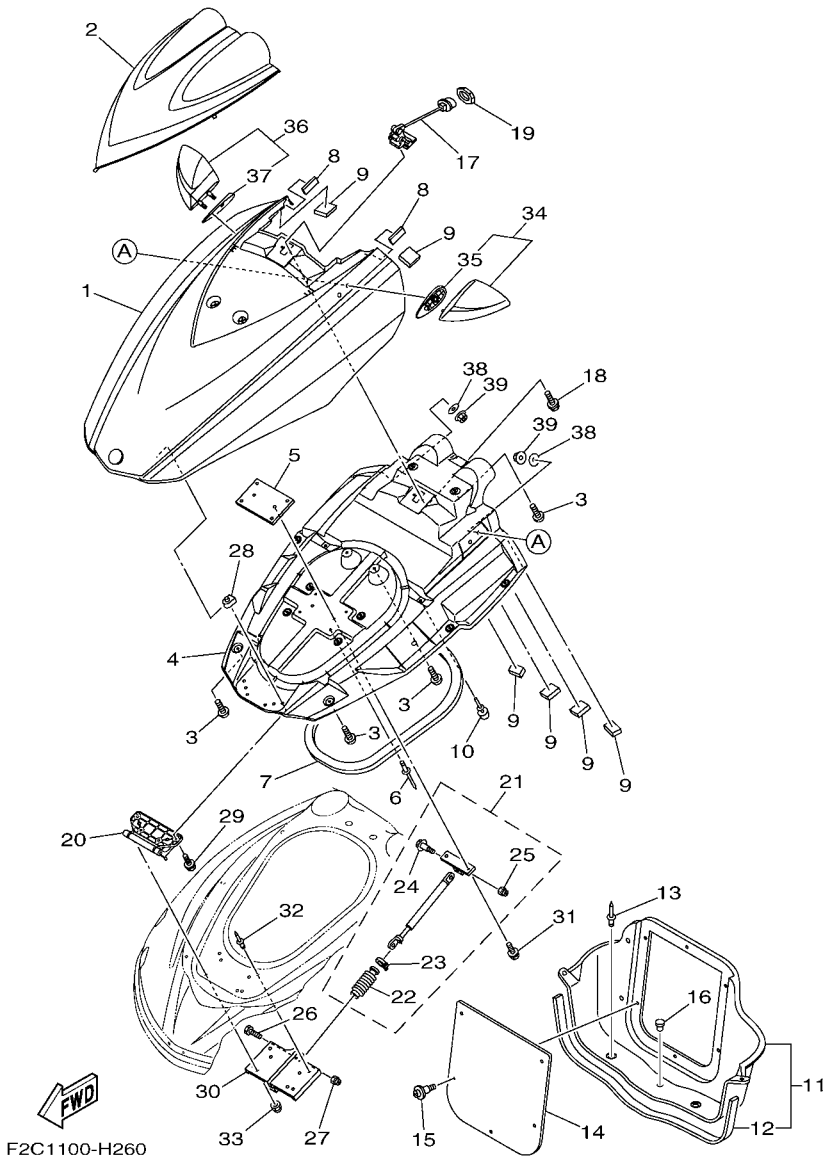


## FIG. 26 ENGINE HATCH 2

| REF. NO. | PART NO. | DESCRIPTION | CAN | EUR | GENE | | | REMARKS |
|---|---|---|---|---|---|---|---|---|
| 1 | F2C–U517B–02–P5 | LID, ENGINE ROOM (RYM4) | 1 | 1 | 1 | | | FOR YELLOW |
| | F2C–U517B–02–P7 | LID, ENGINE ROOM (YRM2) | 1 | 1 | 1 | | | FOR BLACK |
| 2 | F2C–U515N–01–P0 | VISOR (BMG) | 1 | 1 | 1 | | | |
| 3 | 90149–05903 | SCREW | 14 | 14 | 14 | | | |
| 4 | F2C–U213B–01 | COVER,VENTILATOR 1 | 1 | 1 | 1 | | | |
| 5 | F1W–U5148–00 | PLATE, HATCH | 1 | 1 | 1 | | | |
| 6 | 90267–48807 | RIVET, BLIND | 4 | 4 | 4 | | | |
| 7 | F1K–U2663–01 | PACKING 1 | 1 | 1 | 1 | | | |
| 8 | F1K–U266B–00 | PACKING 3 | 2 | 2 | 2 | | | |
| 9 | F2C–U1743–00 | PACKING | 6 | 6 | 6 | | | |
| 10 | F1W–U3768–01 | CUSHION, RUBBER | 2 | 2 | 2 | | | |
| 11 | F2C–U475B–00 | LOCKER,BOW | 1 | 1 | 1 | | | |
| 12 | F2C–U266C–00 | .PACKING 4 | 1 | 1 | 1 | | | |
| 13 | F3J–U516R–00 | RIVET 1 | 4 | 4 | 4 | | | |
| 14 | F1W–U475F–01 | PLATE, LOKER BOW | 1 | 1 | 1 | | | |
| 15 | 90269–08801 | RIVET | 5 | 5 | 5 | | | |
| 16 | 90605–502U1 | PLUG, BLIND | 1 | 1 | 1 | | | |
| 17 | F2C–U517C–01 | LOCK, LID | 1 | 1 | 1 | | | |
| 18 | 90119–059U4 | BOLT, WITH WASHER | 2 | 2 | 2 | | | |
| 19 | F2C–U518D–00 | PACKING | 1 | 1 | 1 | | | |
| 20 | F2C–U517D–00 | HINGE, LID | 1 | 1 | 1 | | | |
| 21 | F2C–6514S–00 | DAMPER ASSY | 1 | 1 | 1 | | | |
| 22 | F1W–6514T–00 | .COVER, DAMPER | 1 | 1 | 1 | | | |
| 23 | 1UA–82591–00 | .BAND | 1 | 1 | 1 | | | |
| 24 | 90109–06218 | .BOLT | 1 | 1 | 1 | | | |
| 25 | 95720–06300 | .NUT, SELF-LOCKING | 1 | 1 | 1 | | | |
| 26 | 90109–06218 | BOLT | 1 | 1 | 1 | | | |

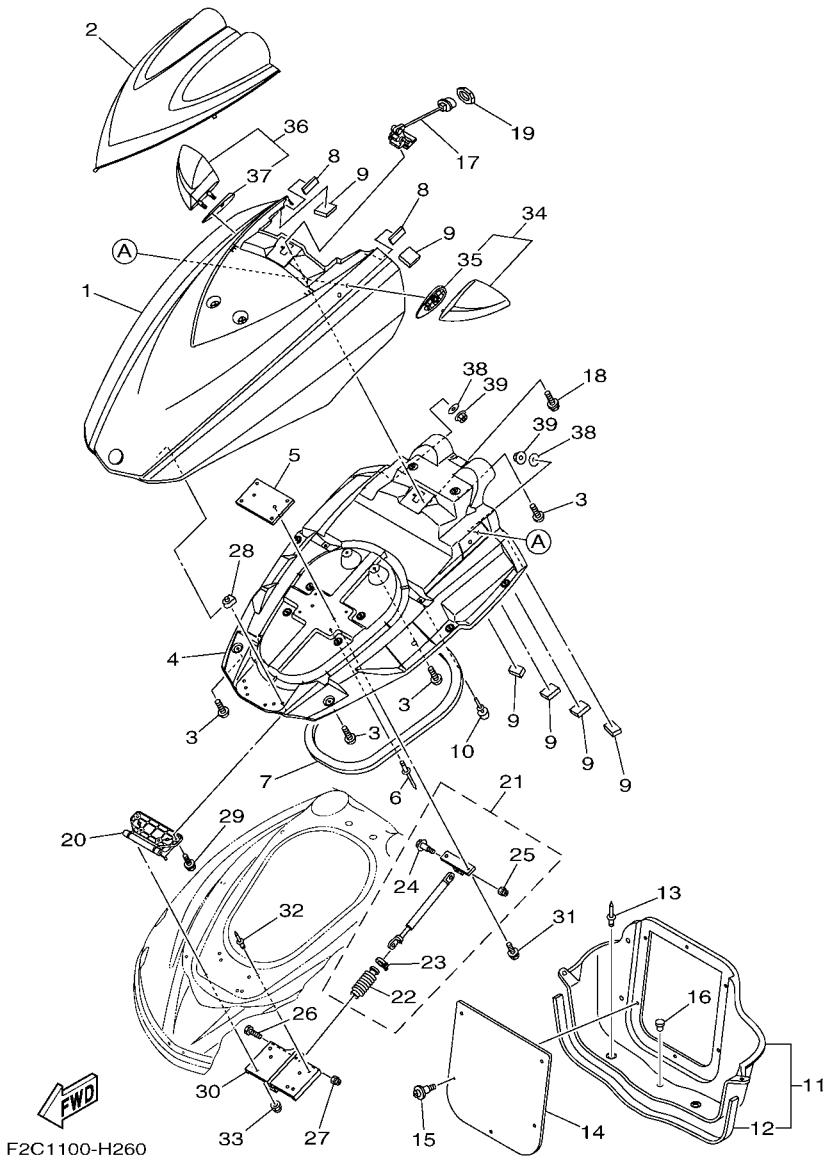


## FIG. 26 ENGINE HATCH 2

| REF. NO. | PART NO. | DESCRIPTION | CAN | EUR | GENE | | | REMARKS |
|---|---|---|---|---|---|---|---|---|
| 27 | 9572R–06300 | NUT, NYLON | 1 | 1 | 1 | | | |
| 28 | 90183–06902 | NUT, SPRING | 4 | 4 | 4 | | | |
| 29 | 90119–06895 | BOLT, WITH WASHER | 4 | 4 | 4 | | | |
| 30 | F1W–U518E–02 | PLATE, HINGE LID | 1 | 1 | 1 | | | |
| 31 | 90119–069UH | BOLT, WITH WASHER | 2 | 2 | 2 | | | |
| 32 | 90267–48020 | RIVET, BLIND | 2 | 2 | 2 | | | |
| 33 | 9572R–06300 | NUT, NYLON | 4 | 4 | 4 | | | |
| 34 | F2C–U596B–00 | MIRROR LH | 1 | 1 | 1 | | | |
| 35 | F2C–U471E–00 | .SPACER 1 | 1 | 1 | 1 | | | |
| 36 | F2C–U596C–00 | MIRROR RH | 1 | 1 | 1 | | | |
| 37 | F2C–U471F–00 | .SPACER 2 | 1 | 1 | 1 | | | |
| 38 | 9299R–08200 | WASHER | 4 | 4 | 4 | | | |
| 39 | 9572R–08300 | NUT, FLANGE | 4 | 4 | 4 | | | |

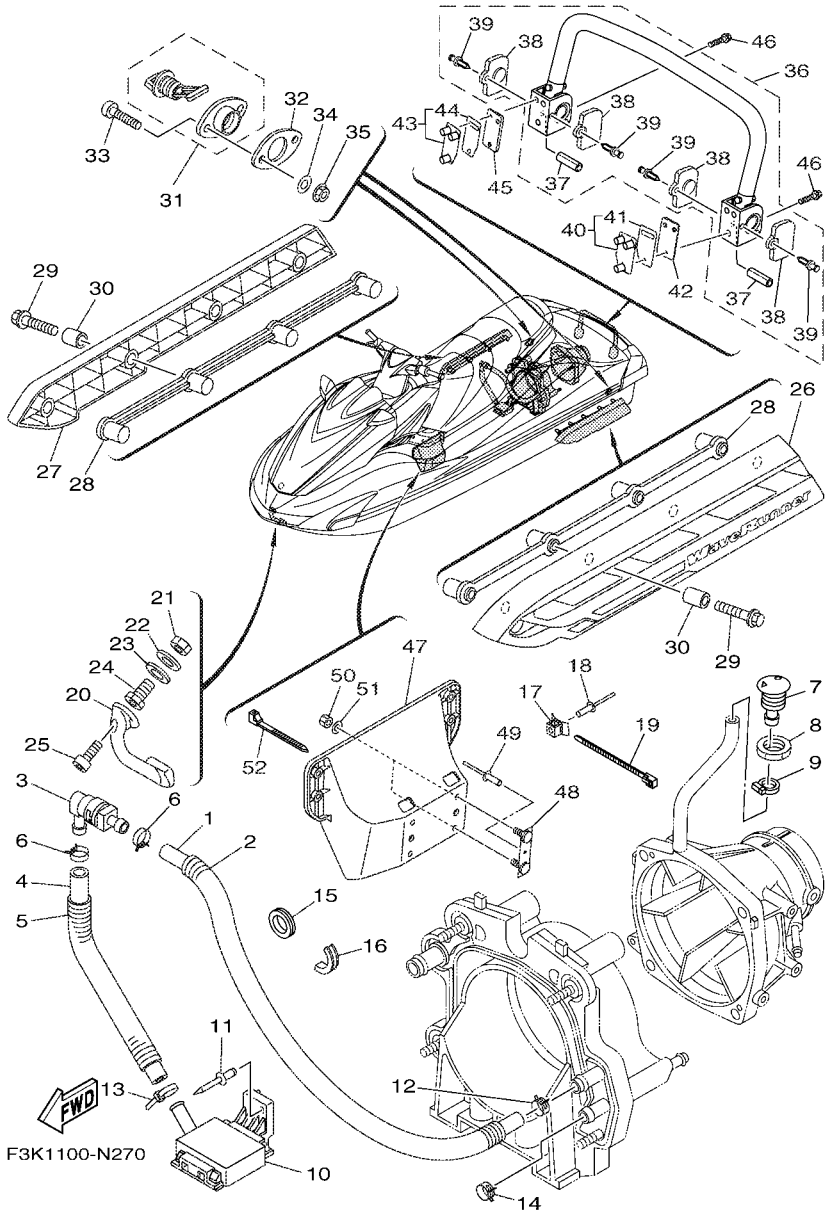


## FIG. 27 HULL & DECK

| REF. NO. | PART NO. | DESCRIPTION | CAN | EUR | GENE | | | REMARKS |
|---|---|---|---|---|---|---|---|---|
| 1 | 90445–20804 | HOSE (L860) | 1 | 1 | 1 | | | |
| 2 | 90446–27M73 | HOSE (L700) | 1 | 1 | 1 | | | |
| 3 | 68N–5112T–00 | JOINT, HOSE | 1 | 1 | 1 | | | |
| 4 | 90445–20800 | HOSE (L500) | 1 | 1 | 1 | | | |
| 5 | 90446–27M55 | TUBE (L400) | 1 | 1 | 1 | | | |
| 6 | 90467–18804 | CLIP | 2 | 2 | 2 | | | |
| 7 | F1W–U269B–00 | SPOUT | 1 | 1 | 1 | | | |
| 8 | EU0–61652–00 | NUT | 1 | 1 | 1 | | | |
| 9 | 90601–118UF | BAND, HOSE 18 | 1 | 1 | 1 | | | |
| 10 | F1B–U761D–02 | STRAINER, BILGE | 1 | 1 | 1 | | | |
| 11 | 90267–489U8 | RIVET, BLIND | 1 | 1 | 1 | | | |
| 12 | 90467–21800 | CLIP | 1 | 1 | 1 | | | |
| 13 | 90601–200U1 | BAND | 1 | 1 | 1 | | | |
| 14 | 90467–200A0 | CLIP | 1 | 1 | 1 | | | |
| 15 | 90480–38800 | GROMMET | 1 | 1 | 1 | | | |
| 16 | F1S–U828H–01 | TRIM, 1 | 1 | 1 | 1 | | | |
| 17 | F1W–U828M–00 | BASE, CLAMP | 2 | 2 | 2 | | | |
| 18 | 90267–48802 | RIVET, BLIND | 2 | 2 | 2 | | | |
| 19 | 90464–32801 | CLAMP | 2 | 2 | 2 | | | |
| 20 | F1K–61624–00 | BOWEYE 1 | 1 | 1 | 1 | | | |
| 21 | 99780–12600 | NUT.HEX.(COARS) | 2 | 2 | 2 | | | |
| 22 | 92990–12200 | WASHER, PLAIN | 2 | 2 | 2 | | | |
| 23 | F0X–61637–00 | WASHER | 2 | 2 | 2 | | | |
| 24 | F0X–61652–00 | NUT (BOLT/NUT) | 2 | 2 | 2 | | | |
| 25 | 90110–06040 | BOLT, HEXAGON SOCKET HEAD | 2 | 2 | 2 | | | |
| 26 | F2S–U883N–01 | STABILIZER LH | 1 | 1 | 1 | | | |
| 27 | F2S–U883P–01 | STABILIZER RH | 1 | 1 | 1 | | | |

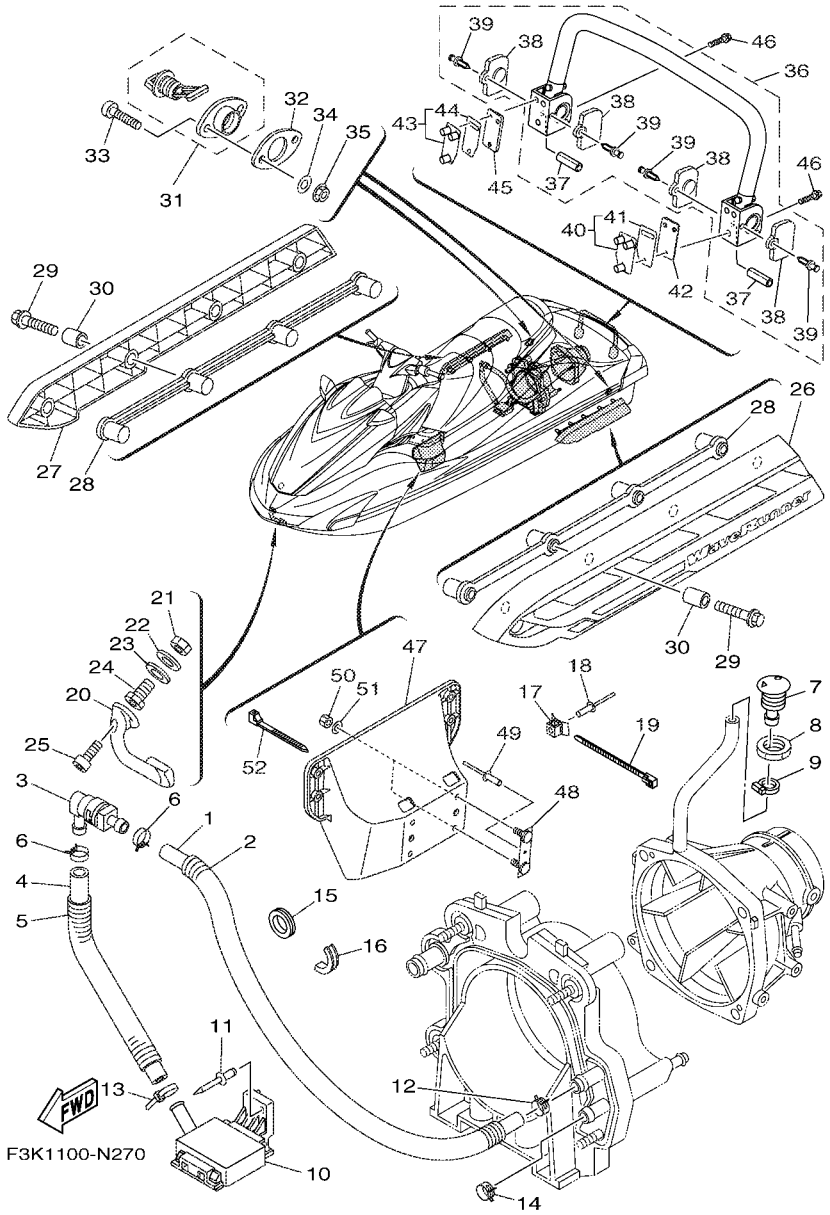


## FIG. 27 HULL & DECK

| REF. NO. | PART NO. | DESCRIPTION | CAN | EUR | GENE | | | REMARKS |
|---|---|---|---|---|---|---|---|---|
| 28 | F2S–U883T–00 | BRACKET,STABILIZER | 2 | 2 | 2 | | | |
| 29 | 90105–08860 | BOLT, FLANGE | 8 | 8 | 8 | | | |
| 30 | F2N–U8169–00 | SPACER | 8 | 8 | 8 | | | |
| 31 | F1S–U2280–02 | DRAIN PLUG ASSY. | 2 | 2 | 2 | | | |
| 32 | F1S–U2285–00 | PACKING, DRAIN | 2 | 2 | 2 | | | |
| 33 | 9788R–05025 | SCREW, PAN HEAD | 4 | 4 | 4 | | | |
| 34 | 9299R–05200 | WASHER | 4 | 4 | 4 | | | |
| 35 | 9572R–05300 | NUT, FLANGE | 4 | 4 | 4 | | | |
| 36 | F2C–U278A–00 | LADDER, STEP ASSY | 1 | 1 | 1 | | | |
| 37 | F1W–U771H–00 | .SLEEVE 1 | 2 | 2 | 2 | | | |
| 38 | F2C–U377H–00 | .INNER, COVER SIDE 1 | 4 | 4 | 4 | | | |
| 39 | F2C–U1314–00 | .PIN | 4 | 4 | 4 | | | |
| 40 | F2C–U278F–00 | BRACKET, LADDER LH | 1 | 1 | 1 | | | |
| 41 | F2C–U278H–00 | .PACKING, BRKT. 1 | 1 | 1 | 1 | | | |
| 42 | F2C–U278L–00 | BRACKET 2 | 1 | 1 | 1 | | | |
| 43 | F2C–U278G–00 | BRACKET, LADDER RH | 1 | 1 | 1 | | | |
| 44 | F2C–U278H–00 | .PACKING, BRKT. 1 | 1 | 1 | 1 | | | |
| 45 | F2C–U278K–00 | BRACKET 1 | 1 | 1 | 1 | | | |
| 46 | 90119–08844 | BOLT, WITH WASHER | 6 | 6 | 6 | | | |
| 47 | F1W–U8572–01 | BRACKET 2 | 1 | 1 | 1 | | | |
| 48 | F1K–U826C–03 | BRACKET | 2 | 2 | 2 | | | |
| 49 | 90267–489U1 | RIVET,BLIND | 2 | 2 | 2 | | | |
| 50 | 9572R–08300 | NUT, FLANGE | 4 | 4 | 4 | | | |
| 51 | 9299R–08200 | WASHER | 4 | 4 | 4 | | | |
| 52 | 90464–32801 | CLAMP | 1 | 1 | 1 | | | |

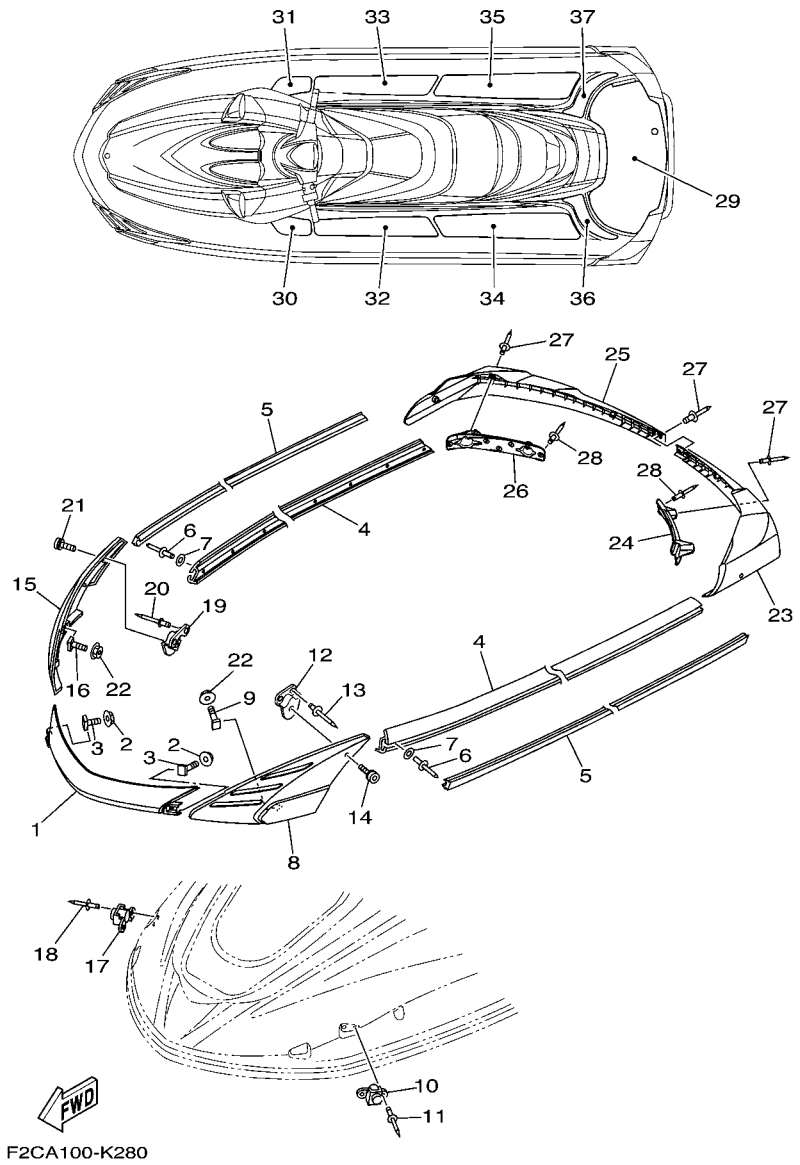


## FIG. 28 GUNWALE & MAT

| REF. NO. | PART NO. | DESCRIPTION | CAN | EUR | GENE | | | REMARKS |
|---|---|---|---|---|---|---|---|---|
| 1 | F2C–U2511–10 | GUNWALE, BOW | 1 | 1 | 1 | | | YB |
| 2 | F2N–U142L–00 | NUT, LOCK | 4 | 4 | 4 | | | |
| 3 | F1W–U491K–00 | BOLT, SPECIAL | 4 | 4 | 4 | | | |
| 4 | F1B–U2512–10 | GUNWALE, SIDE | 2 | 2 | 2 | | | YB |
| 5 | F1B–U2519–10 | INNER,GUNWALE | 2 | 2 | 2 | | | YAMAHA BLACK |
| 6 | 90267–489U8 | RIVET, BLIND | 36 | 36 | 36 | | | |
| 7 | 9299R–05200 | WASHER | 36 | 36 | 36 | | | |
| 8 | F1W–U252E–20 | JOINT, GUNWALE LH | 1 | 1 | 1 | | | YB |
| 9 | F1W–U491K–00 | BOLT, SPECIAL | 2 | 2 | 2 | | | |
| 10 | F1W–U250B–00 | GROMMET ASSY | 1 | 1 | 1 | | | |
| 11 | 90267–489U6 | RIVET, BLIND | 2 | 2 | 2 | | | |
| 12 | F1W–U4949–00 | BRACKET | 1 | 1 | 1 | | | |
| 13 | 90267–489U6 | RIVET, BLIND | 2 | 2 | 2 | | | |
| 14 | 90111–06114 | BOLT,HEX. SOCKET BUTTON | 1 | 1 | 1 | | | |
| 15 | F1W–U252F–20 | JOINT, GUNWALE RH | 1 | 1 | 1 | | | YB |
| 16 | F1W–U491K–00 | BOLT, SPECIAL | 2 | 2 | 2 | | | |
| 17 | F1W–U250B–00 | GROMMET ASSY | 1 | 1 | 1 | | | |
| 18 | 90267–489U6 | RIVET, BLIND | 2 | 2 | 2 | | | |
| 19 | F1W–U4949–00 | BRACKET | 1 | 1 | 1 | | | |
| 20 | 90267–489U6 | RIVET, BLIND | 2 | 2 | 2 | | | |
| 21 | 90111–06114 | BOLT,HEX. SOCKET BUTTON | 1 | 1 | 1 | | | |
| 22 | F2N–U142L–00 | NUT, LOCK | 4 | 4 | 4 | | | |
| 23 | F1W–U251D–20 | GUNWALE, STERN 1 | 1 | 1 | 1 | | | YB |
| 24 | F1W–U251L–01 | BRACKET, GUNWALE 1 | 1 | 1 | 1 | | | |
| 25 | F1W–U251E–20 | GUNWALE, STERN 2 | 1 | 1 | 1 | | | YB |
| 26 | F1W–U251M–01 | BRACKET, GUNWALE 2 | 1 | 1 | 1 | | | |
| 27 | 90267–48825 | RIVET, BLIND | 9 | 9 | 9 | | | |

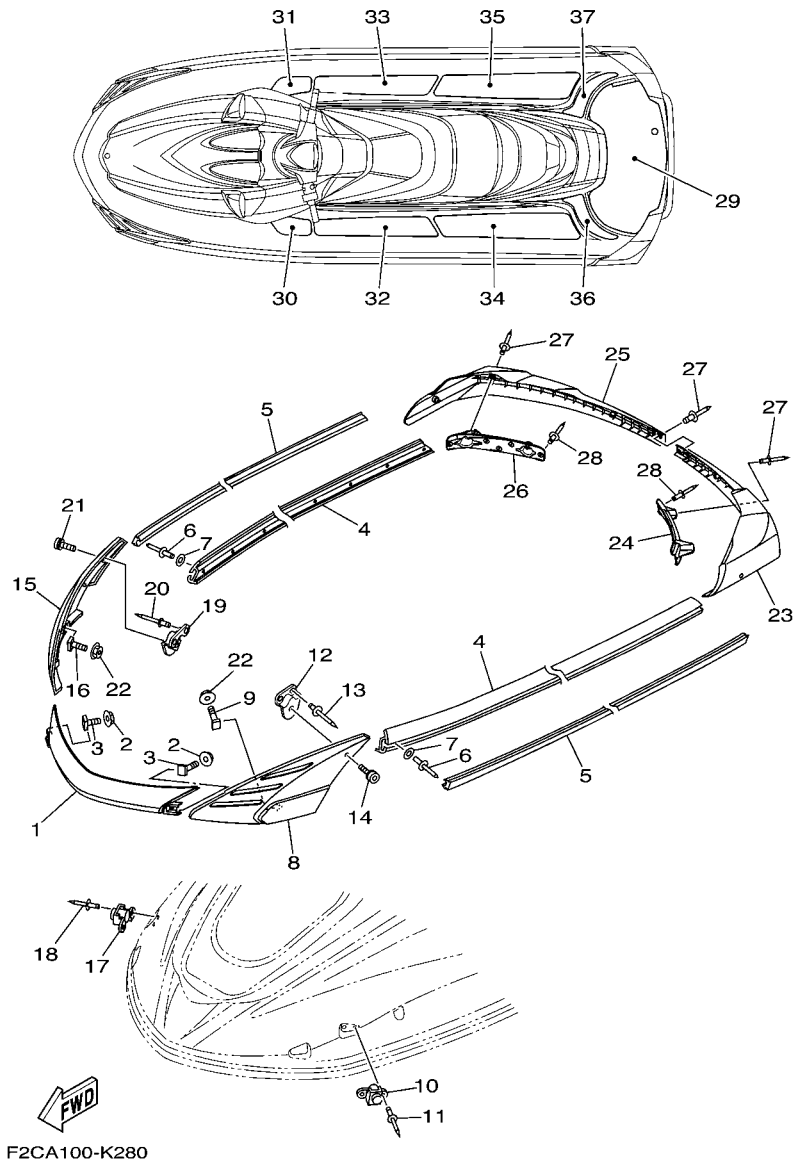


## FIG. 28 GUNWALE & MAT

| REF. NO. | PART NO. | DESCRIPTION | CAN | EUR | GENE | | | REMARKS |
|---|---|---|---|---|---|---|---|---|
| 28 | 90267–489U8 | RIVET, BLIND | 10 | 10 | 10 | | | |
| 29 | F2C–U3581–10 | MAT, UPPER | 1 | 1 | 1 | | | DARK GREY & BLACK |
| 30 | F2C–U351H–10 | MAT, STEP 1 | 1 | 1 | 1 | | | DARK GREY & BLACK |
| 31 | F2C–U351J–10 | MAT, STEP 2 | 1 | 1 | 1 | | | DARK GREY & BLACK |
| 32 | F2C–U351K–10 | MAT, STEP 3 | 1 | 1 | 1 | | | DARK GREY & BLACK |
| 33 | F2C–U351M–10 | MAT, STEP 4 | 1 | 1 | 1 | | | DARK GREY & BLACK |
| 34 | F2C–U351N–10 | MAT, STEP 5 | 1 | 1 | 1 | | | DARK GREY & BLACK |
| 35 | F2C–U351P–10 | MAT, STEP 6 | 1 | 1 | 1 | | | DARK GREY & BLACK |
| 36 | F2C–U351R–10 | MAT, STEP 7 | 1 | 1 | 1 | | | DARK GRRY & BLACK |
| 37 | F2C–U351S–10 | MAT, STEP 8 | 1 | 1 | 1 | | | DARK GREY & BLACK |

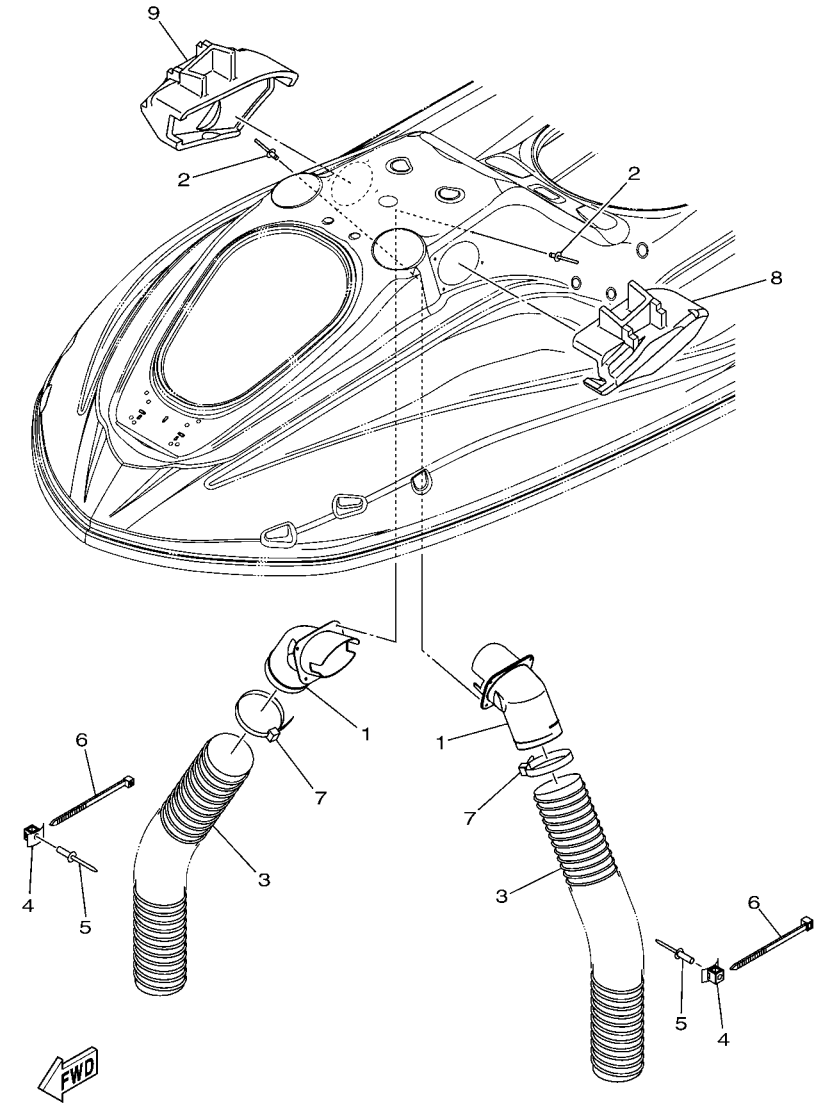


F2C7100-J290

## FIG. 29 VENTILATION

| REF. NO. | PART NO. | DESCRIPTION | CAN | EUR | GENE | | | REMARKS |
|---|---|---|---|---|---|---|---|---|
| 1 | F1W–U2127–01 | BASE, AIR INTAKE | 2 | 2 | 2 | | | |
| 2 | 90267–48806 | RIVET, BLIND | 8 | 8 | 8 | | | |
| 3 | F0X–U213G–01 | HOSE, VENTILATOR 2 | 2 | 2 | 2 | | | |
| 4 | F1W–U828M–00 | BASE, CLAMP | 2 | 2 | 2 | | | |
| 5 | 90267–489U6 | RIVET, BLIND | 2 | 2 | 2 | | | |
| 6 | 90464–99804 | CLAMP | 2 | 2 | 2 | | | |
| 7 | 90601–200U7 | BAND | 2 | 2 | 2 | | | |
| 8 | F2C–U2187–01 | BOX, INDUCTION 1 (LH) | 1 | 1 | 1 | | | |
| 9 | F2C–U2188–01 | BOX, INDUCTION 2 (RH) | 1 | 1 | 1 | | | |

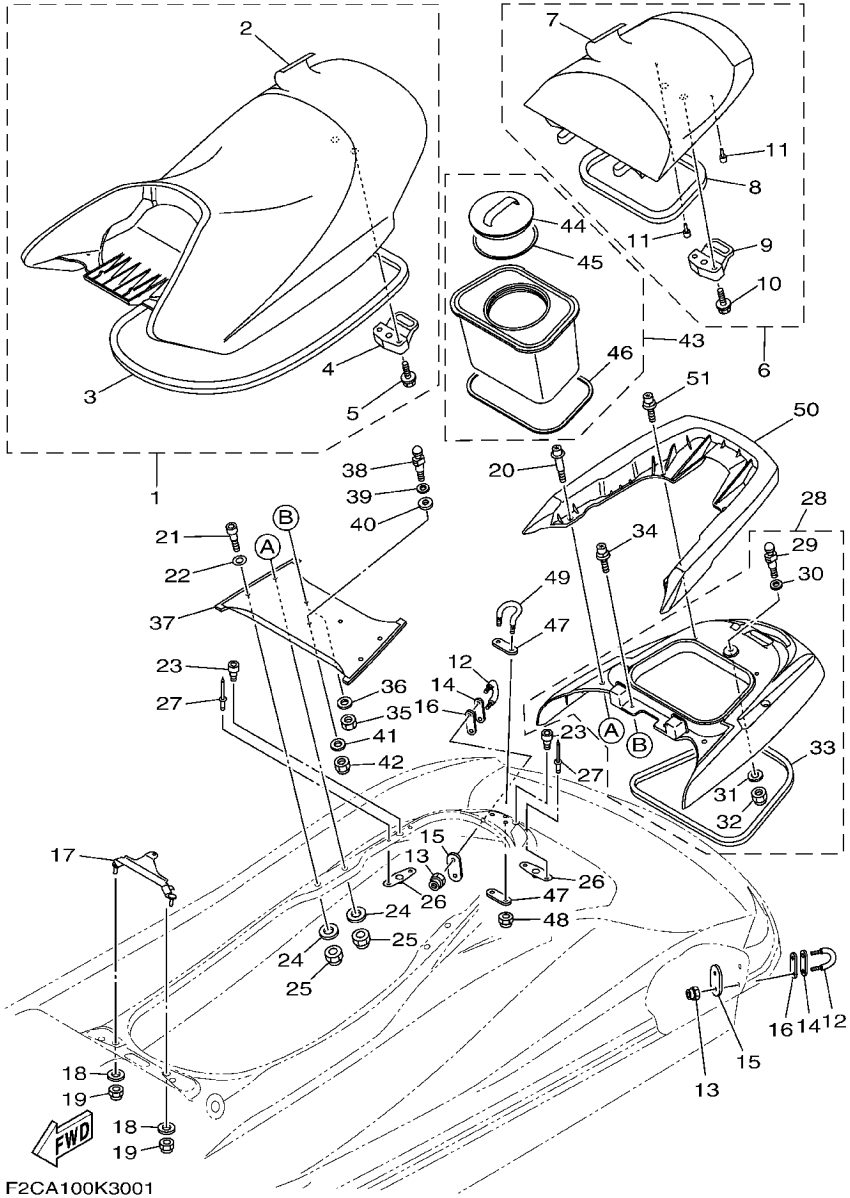


## FIG. 30 SEAT & UNDER LOCKER

| REF. NO. | PART NO. | DESCRIPTION | CAN | EUR | GENE | | | REMARKS |
|---|---|---|---|---|---|---|---|---|
| 1 | F2C–U371A–31 | DOUBLE SEAT ASSY | 1 | 1 | 1 | | | |
| 2 | F2C–U371B–31 | .COVER, SEAT 1 | 1 | 1 | 1 | | | |
| 3 | F1W–U2664–01 | .PACKING | 1 | 1 | 1 | | | |
| 4 | F1B–U3850–02 | .SEAT LOCK ASSY | 1 | 1 | 1 | | | |
| 5 | 90119–069UP | .BOLT, WITH WASHER | 2 | 2 | 2 | | | |
| 6 | F2C–U372A–30 | SINGLE SEAT ASSY | 1 | 1 | 1 | | | |
| 7 | F2C–U372B–30 | .COVER, SEAT | 1 | 1 | 1 | | | |
| 8 | F2C–U266D–01 | .PACKING 5 | 1 | 1 | 1 | | | |
| 9 | F2C–U3850–00 | .SEAT LOCK ASSY | 1 | 1 | 1 | | | |
| 10 | 90119–069UP | .BOLT, WITH WASHER | 2 | 2 | 2 | | | |
| 11 | F1W–U3768–01 | .CUSHION, RUBBER | 2 | 2 | 2 | | | |
| 12 | F2N–U1628–02 | STERN EYE | 2 | 2 | 2 | | | |
| 13 | 9572R–08300 | NUT, FLANGE | 4 | 4 | 4 | | | |
| 14 | GP7–U4953–10 | PLATE A | 2 | 2 | 2 | | | |
| 15 | F2C–U4953–10 | PLATE A | 2 | 2 | 2 | | | |
| 16 | F1B–U1653–02 | PACKING | 2 | 2 | 2 | | | |
| 17 | F2C–U378C–00 | STAY, SEAT 1 | 1 | 1 | 1 | | | |
| 18 | 90201–099U3 | WASHER, PLATE | 2 | 2 | 2 | | | |
| 19 | 9572R–08300 | NUT, FLANGE | 2 | 2 | 2 | | | |
| 20 | F2C–U2624–01 | BOLT | 2 | 2 | 2 | | | |
| 21 | F2C–U2624–20 | BOLT | 2 | 2 | 2 | | | |
| 22 | 9299R–10200 | WASHER | 2 | 2 | 2 | | | |
| 23 | F2C–U2624–10 | BOLT | 3 | 3 | 3 | | | |
| 24 | 9299R–08200 | WASHER | 4 | 4 | 4 | | | |
| 25 | 9572R–08300 | NUT, FLANGE | 4 | 4 | 4 | | | |
| 26 | F2C–U826C–00 | BRACKET | 3 | 3 | 3 | | | |
| 27 | 90267–489U1 | RIVET,BLIND | 6 | 6 | 6 | | | |

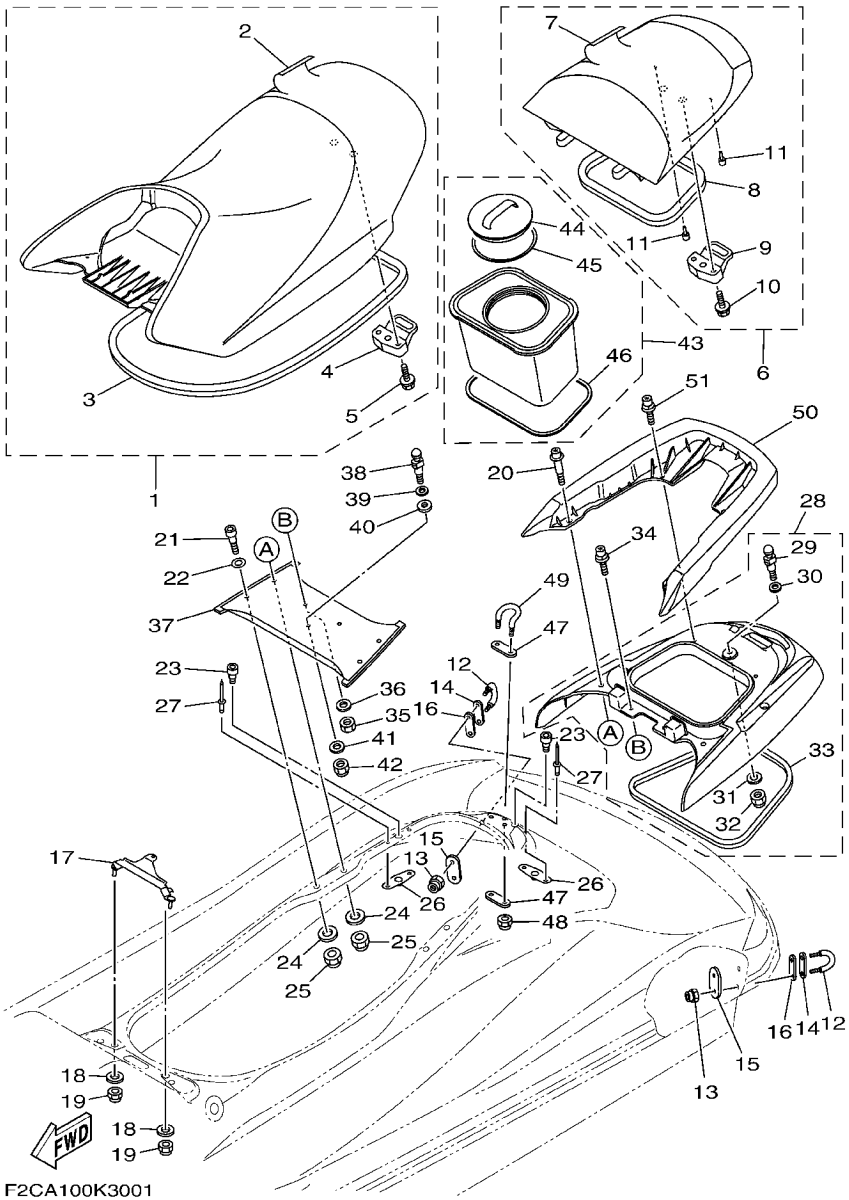


F2CA100K3001

## FIG. 30 SEAT & UNDER LOCKER

| REF. NO. | PART NO. | DESCRIPTION | CAN | EUR | GENE | | | REMARKS |
|---|---|---|---|---|---|---|---|---|
| 28 | F2C–U890L–10 | DECK BEAM ASSY | 1 | 1 | 1 | | | |
| 29 | GH1–U3774–00 | .PIN | 1 | 1 | 1 | | | |
| 30 | 90201–109U6 | .WASHER, PLATE | 1 | 1 | 1 | | | |
| 31 | 9299R–10200 | .WASHER | 1 | 1 | 1 | | | |
| 32 | 9572R–10300 | .NUT, NYLON | 1 | 1 | 1 | | | |
| 33 | F2C–U375E–00 | .PACKING 1 | 1 | 1 | 1 | | | |
| 34 | F2C–U2624–30 | BOLT | 2 | 2 | 2 | | | |
| 35 | 9538R–08600 | NUT | 2 | 2 | 2 | | | |
| 36 | 9299R–08200 | WASHER | 2 | 2 | 2 | | | |
| 37 | F2C–U8952–11 | BEAM, DECK 1 | 1 | 1 | 1 | | | |
| 38 | F1B–U3774–00 | PIN | 1 | 1 | 1 | | | |
| 39 | 92990–12200 | WASHER, PLAIN | 1 | 1 | 1 | | | |
| 40 | F0X–6375E–00 | PACKING 1 | 1 | 1 | 1 | | | |
| 41 | 9299R–10200 | WASHER | 1 | 1 | 1 | | | |
| 42 | 9572R–10300 | NUT, NYLON | 1 | 1 | 1 | | | |
| 43 | F2C–U591A–02 | CASE,ASSY 1 | 1 | 1 | 1 | | | |
| 44 | F2C–U591C–00 | .CAP,CASE | 1 | 1 | 1 | | | |
| 45 | F2C–U591D–01 | .PACKING,CASE | 1 | 1 | 1 | | | |
| 46 | F2C–U266E–00 | .PACKING,6 | 1 | 1 | 1 | | | |
| 47 | F2C–U4953–00 | PLATE A | 2 | 2 | 2 | | | |
| 48 | 9572R–10300 | NUT, NYLON | 2 | 2 | 2 | | | |
| 49 | F2C–U1629–00 | SKI TOWS | 1 | 1 | 1 | | | |
| 50 | F2C–U271B–20 | GRIP, HAND | 1 | 1 | 1 | | | |
| 51 | F2C–U2624–30 | BOLT | 2 | 2 | 2 | | | |

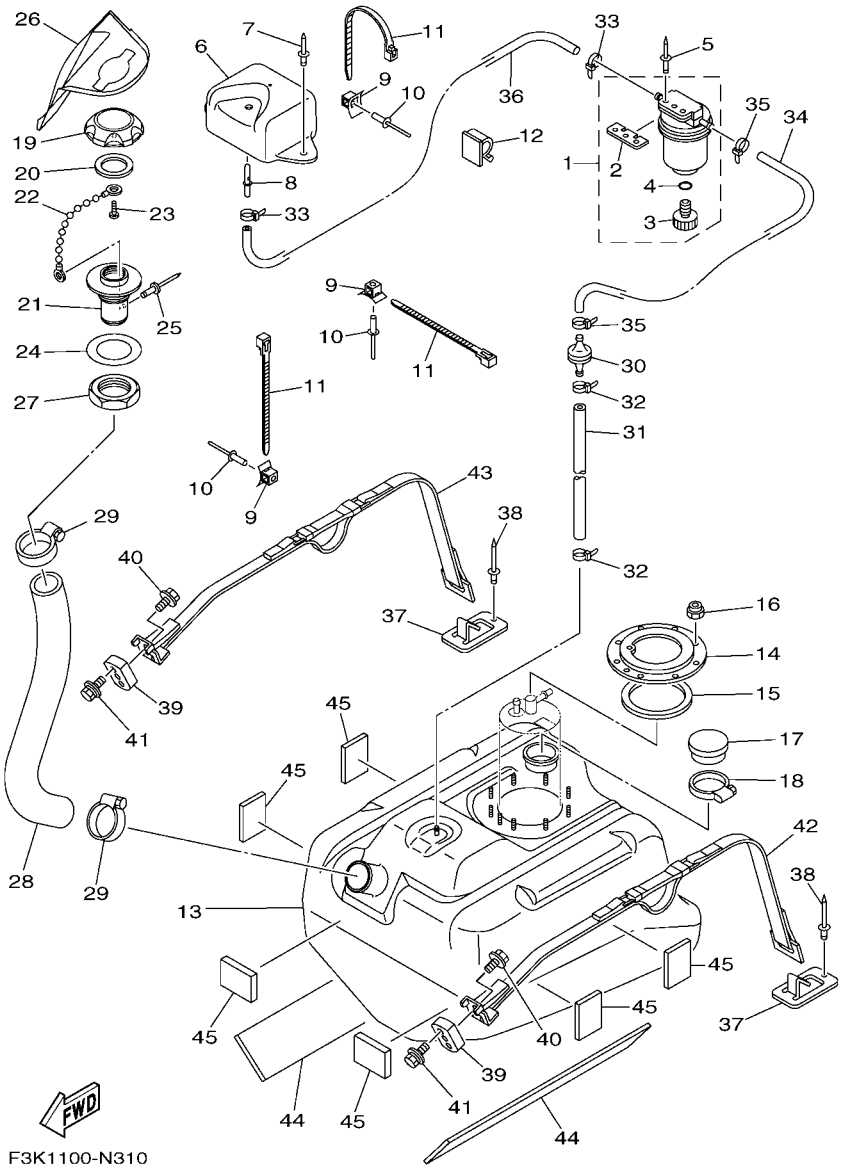


## FIG. 31 FUEL TANK

| REF. NO. | PART NO. | DESCRIPTION | CAN | EUR | GENE | | | REMARKS |
|---|---|---|---|---|---|---|---|---|
| 1 | F2F–6214A–00 | FILTER, VENT ASSY | 1 | 1 | 1 | | | |
| 2 | EW2–62142–00 | .PLATE, FILTER | 1 | 1 | 1 | | | |
| 3 | 70R–24543–00 | .PLUG, DRAIN | 1 | 1 | 1 | | | |
| 4 | 70R–24489–00 | .O-RING | 1 | 1 | 1 | | | |
| 5 | 90267–489U2 | RIVET, BLIND | 2 | 2 | 2 | | | |
| 6 | F1W–U2159–00 | SOCKET, VENTILATION | 1 | 1 | 1 | | | |
| 7 | 90267–489U6 | RIVET, BLIND | 2 | 2 | 2 | | | |
| 8 | F1G–62149–00 | PIPE, VENTILATION | 1 | 1 | 1 | | | |
| 9 | F1W–U828M–00 | BASE, CLAMP | 3 | 3 | 3 | | | |
| 10 | 90267–489U6 | RIVET, BLIND | 3 | 3 | 3 | | | |
| 11 | 90464–32801 | CLAMP | 3 | 3 | 3 | | | |
| 12 | 90464–17800 | CLAMP | 1 | 1 | 1 | | | |
| 13 | F1W–U7711–12 | TANK, FUEL | 1 | | | | | |
| | F1W–U7711–03 | TANK, FUEL | | 1 | 1 | | | |
| 14 | F1B–U7773–00 | RING | 1 | 1 | 1 | | | |
| 15 | F1B–67747–00 | PACKING, SEAL | 1 | 1 | 1 | | | |
| 16 | 9572R–06300 | NUT, NYLON | 9 | 9 | 9 | | | |
| 17 | FN8–6771K–00 | COVER | 1 | 1 | 1 | | | |
| 18 | 90601–162U5 | BAND, HOSE 62 | 1 | 1 | 1 | | | |
| 19 | F2N–U7831–10 | CAP, FUEL FILLER | 1 | 1 | 1 | | | BLACK |
| 20 | GP7–U7832–01 | PACKING | 1 | 1 | 1 | | | |
| 21 | GP7–U7833–11 | SOCKET | 1 | 1 | 1 | | | BLACK |
| 22 | GP7–U7835–00 | CHAIN BALL | 1 | 1 | 1 | | | |
| 23 | 90169–049U1 | TAPPING SCREW | 1 | 1 | 1 | | | |
| 24 | GP7–U7834–10 | PACKING FUEL FILLER | 1 | 1 | 1 | | | |
| 25 | 90267–329UR | RIVET, BLIND | 1 | 1 | 1 | | | |
| 26 | F3K–U895D–00 | PROTECTOR | 1 | 1 | 1 | | | |

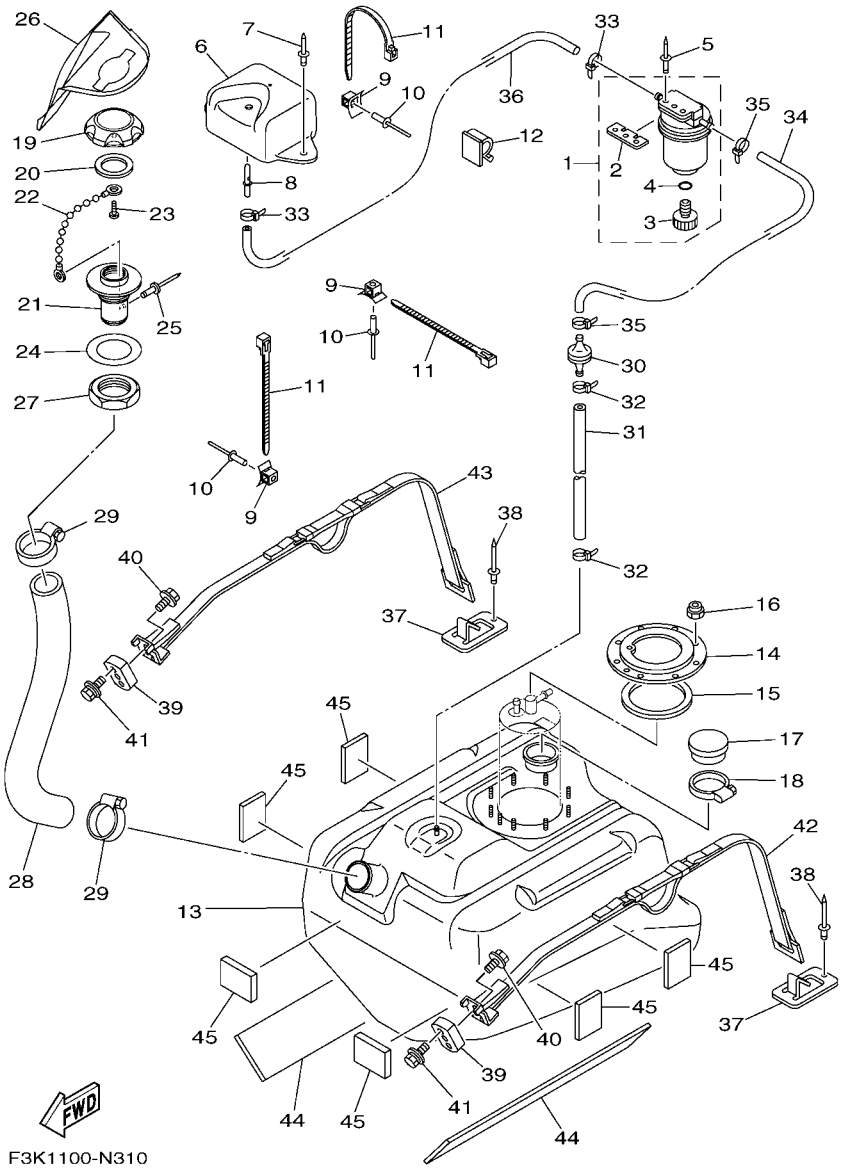


## FIG. 31 FUEL TANK

| REF. NO. | PART NO. | DESCRIPTION | CAN | EUR | GENE | | | REMARKS |
|---|---|---|---|---|---|---|---|---|
| 27 | GP7–U783F–00 | NUT, FUEL FILLER | 1 | 1 | 1 | | | |
| 28 | F2C–U7844–00 | HOSE | 1 | 1 | 1 | | | |
| 29 | 90601–155U4 | BAND, HOSE 55 | 2 | 2 | 2 | | | |
| 30 | EU0–67767–31 | CHECK VALVE | 1 | 1 | 1 | | | |
| 31 | F2H–U785H–00 | HOSE, AIR VENT 3 | 1 | 1 | 1 | | | |
| 32 | 90465–11829 | CLAMP | 2 | 2 | 2 | | | |
| 33 | 90465–11829 | CLAMP | 2 | 2 | 2 | | | |
| 34 | F2C–U785G–00 | HOSE, AIR VENT | 1 | 1 | 1 | | | |
| 35 | 90465–11829 | CLAMP | 2 | 2 | 2 | | | |
| 36 | F0D–U7856–10 | HOSE, AIR VENT 3 | 1 | 1 | 1 | | | |
| 37 | F1K–U5772–04 | HOOK A | 2 | 2 | 2 | | | |
| 38 | 90267–489U1 | RIVET,BLIND | 2 | 2 | 2 | | | |
| 39 | F1X–U2873–00 | NUT, SPECIAL | 2 | 2 | 2 | | | |
| 40 | 90119–089U7 | BOLT, WITH WASHER | 2 | 2 | 2 | | | |
| 41 | 90119–069UH | BOLT, WITH WASHER | 4 | 4 | 4 | | | |
| 42 | F2C–67743–00 | BELT, TANK 1 | 1 | 1 | 1 | | | |
| 43 | F2C–67743–10 | BELT, TANK 1 | 1 | 1 | 1 | | | |
| 44 | F1W–U759B–00 | MAT 1 | 2 | 2 | 2 | | | |
| 45 | F1W–U759C–01 | MAT 2 | 6 | 6 | 6 | | | |

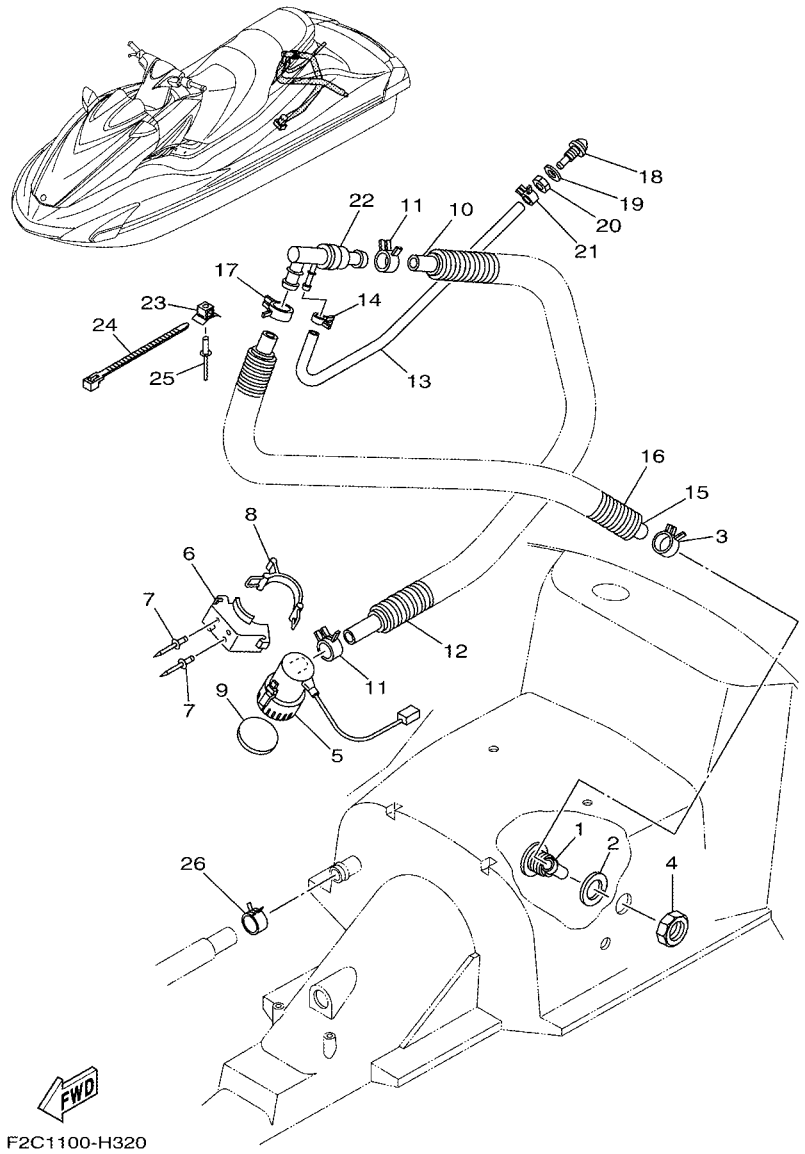


## FIG. 32 BILGE PUMP

| REF. NO. | PART NO. | DESCRIPTION | CAN | EUR | GENE | | | REMARKS |
|---|---|---|---|---|---|---|---|---|
| 1 | F1W–U224E–00 | BODY, DRAIN 3 | 1 | 1 | 1 | | | |
| 2 | F1S–U7525–01 | PACKING | 1 | 1 | 1 | | | |
| 3 | 90467–26800 | CLIP | 1 | 1 | 1 | | | |
| 4 | F1B–62241–00 | DRAIN, COCKPIT | 1 | 1 | 1 | | | |
| 5 | F1B–U8360–01 | BILGE PUMP ASSY | 1 | 1 | 1 | | | |
| 6 | F1B–U7698–01 | BRACKET | 1 | 1 | 1 | | | |
| 7 | F3J–U516R–00 | RIVET 1 | 2 | 2 | 2 | | | |
| 8 | GA7–68218–00 | BAND, BATTERY | 1 | 1 | 1 | | | |
| 9 | F1B–U7656–00 | PACKING, BILGE | 1 | 1 | 1 | | | |
| 10 | F1B–U7626–00 | HOSE 1 | 1 | 1 | 1 | | | |
| 11 | 90467–25801 | CLIP | 2 | 2 | 2 | | | |
| 12 | 90447–28004 | HOSE, WITH SPRING (L800) | 1 | 1 | 1 | | | |
| 13 | F1W–U7629–00 | HOSE, DRAIN 2 | 1 | 1 | 1 | | | |
| 14 | 90467–14803 | CLIP | 1 | 1 | 1 | | | |
| 15 | F1B–U7628–00 | HOSE, DRAIN 3 | 1 | 1 | 1 | | | |
| 16 | 90447–28004 | HOSE, WITH SPRING (L800) | 1 | 1 | 1 | | | |
| 17 | 90467–26800 | CLIP | 1 | 1 | 1 | | | |
| 18 | GH7–6753B–00 | PILOT,WATER | 1 | 1 | 1 | | | |
| 19 | 90430–16910 | GASKET | 1 | 1 | 1 | | | |
| 20 | GP7–61652–00 | NUT | 1 | 1 | 1 | | | |
| 21 | 90467–14803 | CLIP | 1 | 1 | 1 | | | |
| 22 | F1S–67620–00 | HOSE JOINT | 1 | 1 | 1 | | | |
| 23 | F1W–U828M–00 | BASE, CLAMP | 1 | 1 | 1 | | | |
| 24 | F2C–U4256–00 | CLAMP | 1 | 1 | 1 | | | |
| 25 | 90267–489U6 | RIVET, BLIND | 1 | 1 | 1 | | | |
| 26 | 90467–26800 | CLIP | 1 | 1 | 1 | | | |

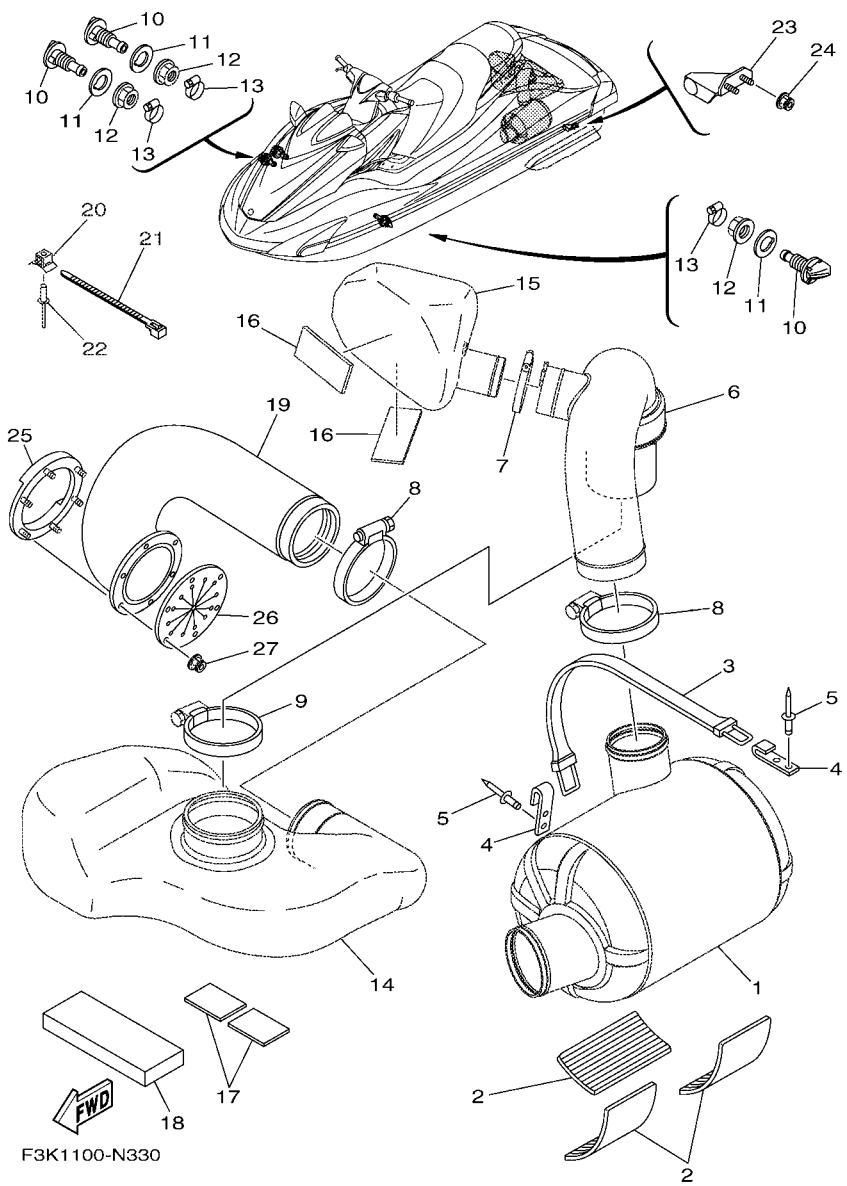


## FIG. 33 EXHAUST 3

| REF. NO. | PART NO. | DESCRIPTION | CAN | EUR | GENE | | | REMARKS |
|---|---|---|---|---|---|---|---|---|
| 1 | F1W–U7550–02 | WATER LOCK COMP. | 1 | 1 | 1 | | | |
| 2 | F1S–U8221–00 | PAD, BATTERY | 3 | 3 | 3 | | | |
| 3 | EW2–67821–00 | BAND, FUEL TANK | 1 | 1 | 1 | | | |
| 4 | GA7–65772–00 | HOOK A | 2 | 2 | 2 | | | |
| 5 | 90267–489U1 | RIVET,BLIND | 4 | 4 | 4 | | | |
| 6 | F1W–U7555–01 | HOSE, EXHAUST | 1 | 1 | 1 | | | |
| 7 | 90601–170UG | BAND, HOSE 70 | 1 | 1 | 1 | | | |
| 8 | 90450–99801 | HOSE CLAMP ASSY | 2 | 2 | 2 | | | |
| 9 | 90450–99804 | HOSE CLAMP ASSY | 1 | 1 | 1 | | | |
| 10 | F2C–U753B–01 | PILOT, WATER | 3 | 3 | 3 | | | |
| 11 | F2C–U7564–00 | GASKET | 3 | 3 | 3 | | | |
| 12 | F2C–U2733–00 | NUT | 3 | 3 | 3 | | | |
| 13 | 90467–17802 | CLIP | 3 | 3 | 3 | | | |
| 14 | F1W–U4261–00 | TANK, WATER | 1 | 1 | 1 | | | |
| 15 | F1W–U753C–01 | RESONATOR 1 | 1 | 1 | 1 | | | |
| 16 | F1K–U759C–00 | MAT 2 | 2 | 2 | 2 | | | |
| 17 | F1W–U759C–01 | MAT 2 | 2 | 2 | 2 | | | |
| 18 | F1W–U8831–01 | BED,TANK 1 | 1 | 1 | 1 | | | |
| 19 | F1B–U758D–03 | HOSE,EXHAUST 3 | 1 | 1 | 1 | | | |
| 20 | F1W–U828M–00 | BASE, CLAMP | 1 | 1 | 1 | | | |
| 21 | 90464–32801 | CLAMP | 1 | 1 | 1 | | | |
| 22 | 90267–48802 | RIVET, BLIND | 1 | 1 | 1 | | | |
| 23 | F2C–U755G–00 | BRKT., WATER LOCK | 1 | 1 | 1 | | | |
| 24 | F2N–U142L–00 | NUT, LOCK | 2 | 2 | 2 | | | |
| 25 | F1S–U757B–01 | PLATE | 1 | 1 | 1 | | | |
| 26 | F1B–U751G–00 | VALVE, EXHAUST | 1 | 1 | 1 | | | |
| 27 | F2N–U142L–00 | NUT, LOCK | 6 | 6 | 6 | | | |

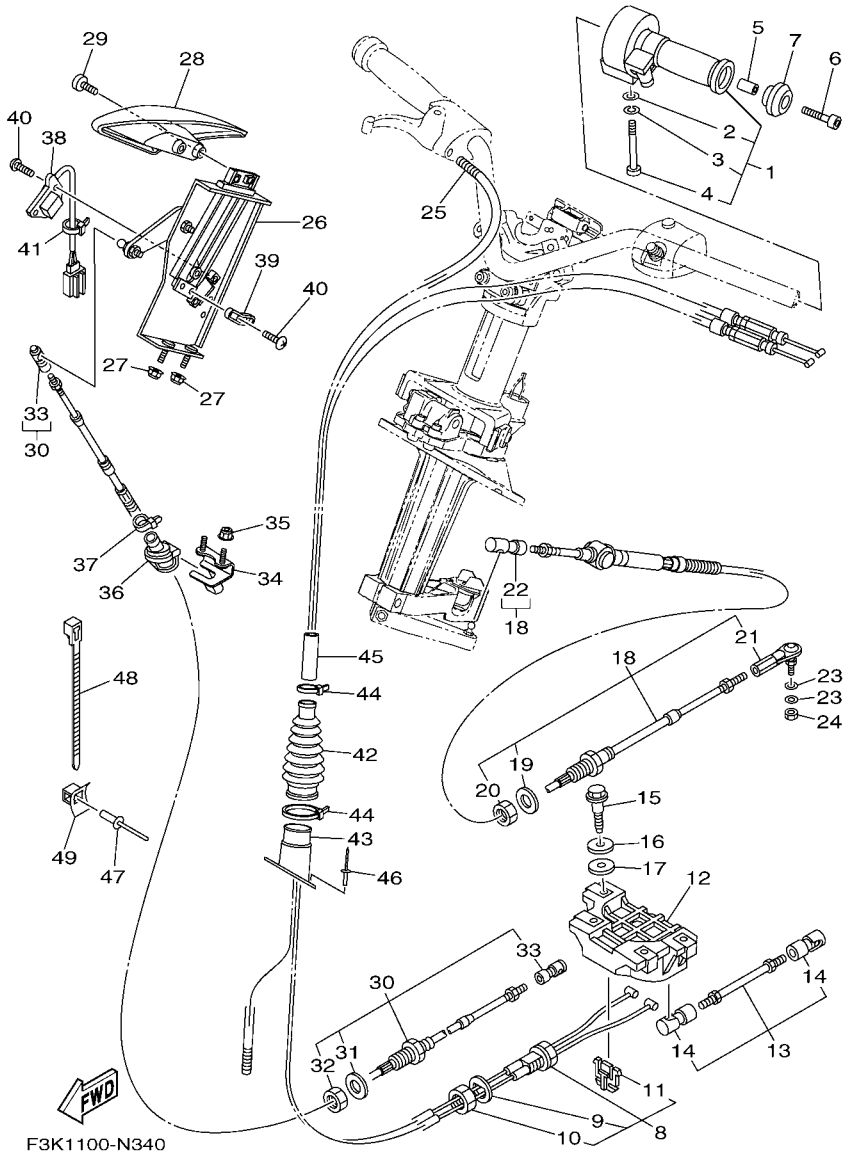


## FIG. 34 CONTROL CABLE

| REF. NO. | PART NO. | DESCRIPTION | CAN | EUR | GENE | | | REMARKS |
|---|---|---|---|---|---|---|---|---|
| 1 | F1W–6153A–00 | NOZZLE,CONTROL ASSY | 1 | 1 | 1 | | | |
| 2 | 92990–06200 | .WASHER, PLAIN | 1 | 1 | 1 | | | |
| 3 | 92990–06100 | .WASHER, SPRING | 1 | 1 | 1 | | | |
| 4 | F1W–613C1–00 | .SCREW | 1 | 1 | 1 | | | |
| 5 | 90387–05800 | COLLAR | 1 | 1 | 1 | | | |
| 6 | 90110–05908 | BOLT, HEXAGON SOCKET HEAD | 1 | 1 | 1 | | | |
| 7 | GP7–U155F–00 | GRIP, END | 1 | 1 | 1 | | | |
| 8 | F2C–6153E–00 | CABLE,NOZZLE CONTROL 3 | 1 | 1 | 1 | | | |
| 9 | F1W–61438–00 | .PACKING C | 1 | 1 | 1 | | | |
| 10 | F1B–6151S–00 | .NUT | 1 | 1 | 1 | | | |
| 11 | F1W–61557–00 | .GUIDE, CABLE | 1 | 1 | 1 | | | |
| 12 | F1W–6153J–00 | REMOCON,NOZZLE 2 | 1 | 1 | 1 | | | |
| 13 | F3K–6150A–00 | ROD ASSY | 1 | 1 | 1 | | | |
| 14 | F1B–61460–00 | .BALL JOINT ASSY | 2 | 2 | 2 | | | |
| 15 | 90109–06233 | BOLT | 4 | 4 | 4 | | | |
| 16 | 90201–099U3 | WASHER, PLATE | 4 | 4 | 4 | | | |
| 17 | 90202–08002 | WASHER, PLATE | 4 | 4 | 4 | | | |
| 18 | F2C–61481–10 | CABLE, STEERING | 1 | 1 | 1 | | | |
| 19 | F1B–61438–00 | .PACKING C | 1 | 1 | 1 | | | |
| 20 | F1B–6151S–00 | .NUT | 1 | 1 | 1 | | | |
| 21 | F1B–61461–02 | .STUD, JOINT BALL | 1 | 1 | 1 | | | |
| 22 | F2N–61460–00 | .BALL JOINT ASSY | 1 | 1 | 1 | | | |
| 23 | 90201–06906 | WASHER, PLATE | 2 | 2 | 2 | | | |
| 24 | 9538R–06700 | NUT | 1 | 1 | 1 | | | |
| 25 | 90447–07001 | HOSE, WITH SPRING (L400) | 1 | 1 | 1 | | | |
| 26 | F2C–U134A–03 | REMOCON. LEVER ASSY. | 1 | 1 | 1 | | | |
| 27 | F2N–U142L–00 | NUT, LOCK | 2 | 2 | 2 | | | |

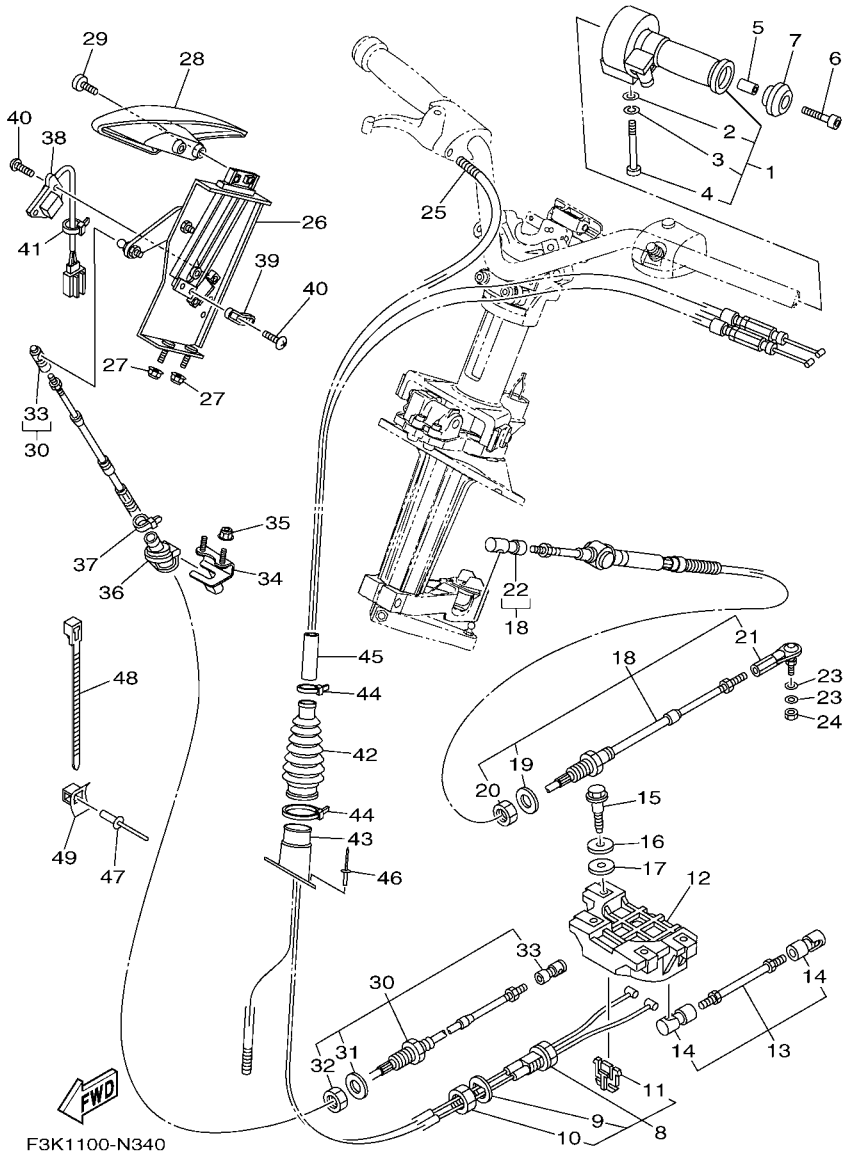


## FIG. 34 CONTROL CABLE

| REF. NO. | PART NO. | DESCRIPTION | CAN | EUR | GENE | | | REMARKS |
|---|---|---|---|---|---|---|---|---|
| 28 | F2C–U2714–00 | GRIP | 1 | 1 | 1 | | | |
| 29 | 90154–06017 | SCREW, BINDING | 2 | 2 | 2 | | | |
| 30 | F3K–6149C–00 | CABLE,REVERSE | 1 | 1 | 1 | | | |
| 31 | F1B–61438–00 | .PACKING C | 1 | 1 | 1 | | | |
| 32 | F1B–6151S–00 | .NUT | 1 | 1 | 1 | | | |
| 33 | F2C–61460–00 | .BALL JOINT ASSY | 2 | 2 | 2 | | | |
| 34 | F2C–U1467–01 | BRACKET,STOPPER CABLE | 1 | 1 | 1 | | | |
| 35 | F2N–U142L–00 | NUT, LOCK | 2 | 2 | 2 | | | |
| 36 | F2C–U146G–01 | PACKING, CABLE | 1 | 1 | 1 | | | |
| 37 | 90465–11829 | CLAMP | 1 | 1 | 1 | | | |
| 38 | F1W–6830K–00 | REVERSE SENSOR ASSY | 1 | 1 | 1 | | | |
| 39 | F2C–6838C–00 | MAGNET | 1 | 1 | 1 | | | |
| 40 | 90150–05807 | SCREW, ROUND HEAD | 4 | 4 | 4 | | | |
| 41 | 90465–11829 | CLAMP | 1 | 1 | 1 | | | |
| 42 | F2C–U822E–01 | GROMMET | 1 | 1 | 1 | | | |
| 43 | F2C–U1465–00 | COLLAR, PLASTIC | 1 | 1 | 1 | | | |
| 44 | 90464–40825 | CLAMP | 2 | 2 | 2 | | | |
| 45 | GJ1–U7578–11 | PACKING, HOSE 2 | 1 | 1 | 1 | | | |
| 46 | 90267–48806 | RIVET, BLIND | 3 | 3 | 3 | | | |
| 47 | 90267–489U6 | RIVET, BLIND | 1 | 1 | 1 | | | |
| 48 | 90464–32801 | CLAMP | 1 | 1 | 1 | | | |
| 49 | F1W–U828M–00 | BASE, CLAMP | 1 | 1 | 1 | | | |

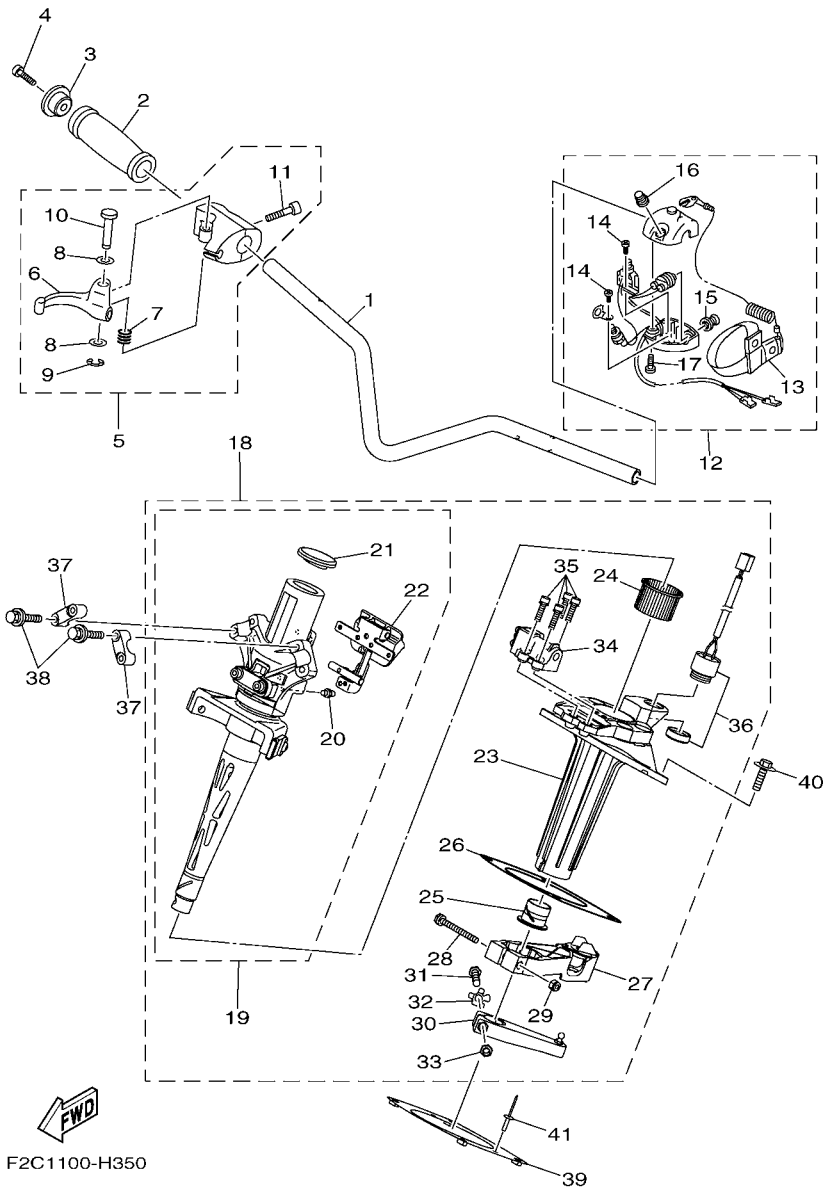


## FIG. 35 STEERING 1

| REF. NO. | PART NO. | DESCRIPTION | CAN | EUR | GENE | | | REMARKS |
|---|---|---|---|---|---|---|---|---|
| 1 | F2C–U1552–00 | HANDLE | 1 | 1 | 1 | | | |
| 2 | GP7–U155D–01 | GRIP, HANDLE | 1 | 1 | 1 | | | |
| 3 | GP7–U155F–00 | GRIP, END | 1 | 1 | 1 | | | |
| 4 | 90110–05908 | BOLT, HEXAGON SOCKET HEAD | 1 | 1 | 1 | | | |
| 5 | F0D–67250–10 | THROTTLE LEVER ASSY | 1 | 1 | 1 | | | |
| 6 | F0D–67255–02 | .LEVER, THROTTLE | 1 | 1 | 1 | | | |
| 7 | EW2–67256–00 | .SPRING | 1 | 1 | 1 | | | |
| 8 | EW2–67258–01 | .WASHER | 2 | 2 | 2 | | | |
| 9 | EW2–67259–01 | .E-RING | 1 | 1 | 1 | | | |
| 10 | F0D–67257–00 | .SHAFT | 1 | 1 | 1 | | | |
| 11 | F1X–6725F–01 | .BOLT, THROTTLE | 2 | 2 | 2 | | | |
| 12 | F2C–68310–00 | SWITCH BOX ASSY | 1 | 1 | 1 | | | |
| 13 | EW2–68348–00 | .LANYARD, STOP SWITCH | 1 | 1 | 1 | | | |
| 14 | 97880–03008 | .SCREW, PAN HEAD | 2 | 2 | 2 | | | |
| 15 | FK7–68312–02 | .STOP BUTTON COMP | 1 | 1 | 1 | | | |
| 16 | FK7–68313–02 | .START BUTTON COMP. | 1 | 1 | 1 | | | |
| 17 | 97880–05025 | .SCREW, PAN HEAD | 2 | 2 | 2 | | | |
| 18 | F2C–61400–00 | STEERING MASTER ASSY | 1 | 1 | 1 | | | |
| 19 | F2C–67410–01 | .SHAFT ASSY | 1 | 1 | 1 | | | |
| 20 | F2C–6151T–00 | ..NIPPLE, GREASE | 1 | 1 | 1 | | | |
| 21 | F2C–613B0–00 | ..CAP | 1 | 1 | 1 | | | |
| 22 | F2C–6287A–00 | ..LOCK ASSY | 1 | 1 | 1 | | | |
| 23 | F2C–6152M–00 | .HOUSING ASSY | 1 | 1 | 1 | | | |
| 24 | F1K–6134M–00 | .BUSH | 1 | 1 | 1 | | | |
| 25 | F2C–6134M–00 | .BUSH | 1 | 1 | 1 | | | |
| 26 | F2C–6143C–00 | .SEAL, RUBBER | 1 | 1 | 1 | | | |
| 27 | F2C–6146A–00 | .CABLE STOPPER ASSY. | 1 | 1 | 1 | | | |

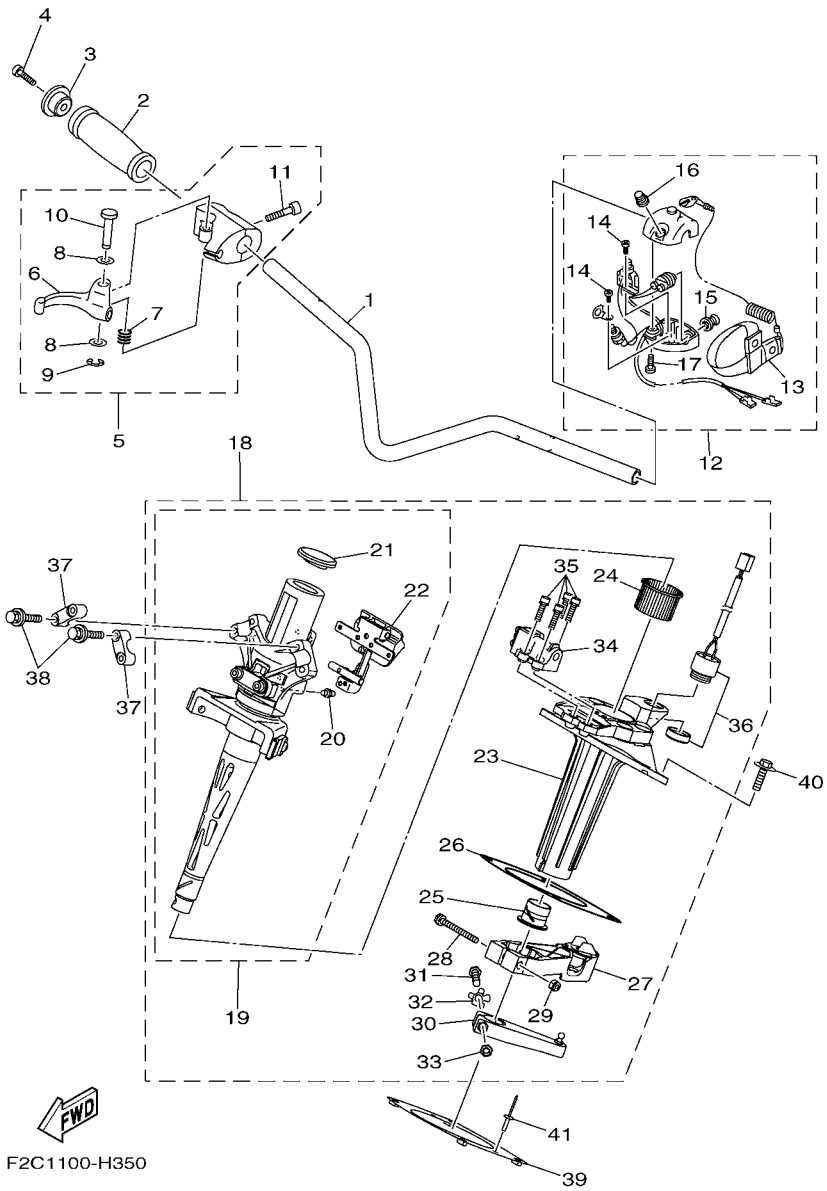


## FIG. 35 STEERING 1

| REF. NO. | PART NO. | DESCRIPTION | CAN | EUR | GENE | | | REMARKS |
|---|---|---|---|---|---|---|---|---|
| 28 | F2C–61369–00 | .BOLT | 1 | 1 | 1 | | | |
| 29 | 95720–06300 | .NUT, SELF-LOCKING | 1 | 1 | 1 | | | |
| 30 | F2C–6153R–00 | .ARM ASSY. | 1 | 1 | 1 | | | |
| 31 | F1K–61355–00 | .BOLT | 1 | 1 | 1 | | | |
| 32 | F1K–6142B–00 | .PLATE, RETAINING | 1 | 1 | 1 | | | |
| 33 | 95720–08300 | .NUT, SELF-LOCKING | 1 | 1 | 1 | | | |
| 34 | F1W–68303–00 | .SENSOR ASSY | 1 | 1 | 1 | | | |
| 35 | F1W–61516–00 | .BOLT | 4 | 4 | 4 | | | |
| 36 | F1S–68341–00 | .BUZZER | 1 | 1 | 1 | | | |
| 37 | EU0–23814–31 | HOLDER, HANDLE UPPER | 2 | 2 | 2 | | | |
| 38 | 90119–089UU | BOLT, WITH WASHER | 4 | 4 | 4 | | | |
| 39 | F2C–U1554–00 | PLATE, RETAINING | 1 | 1 | 1 | | | |
| 40 | 90119–08836 | BOLT, WITH WASHER | 4 | 4 | 4 | | | |
| 41 | 90267–48806 | RIVET, BLIND | 2 | 2 | 2 | | | |

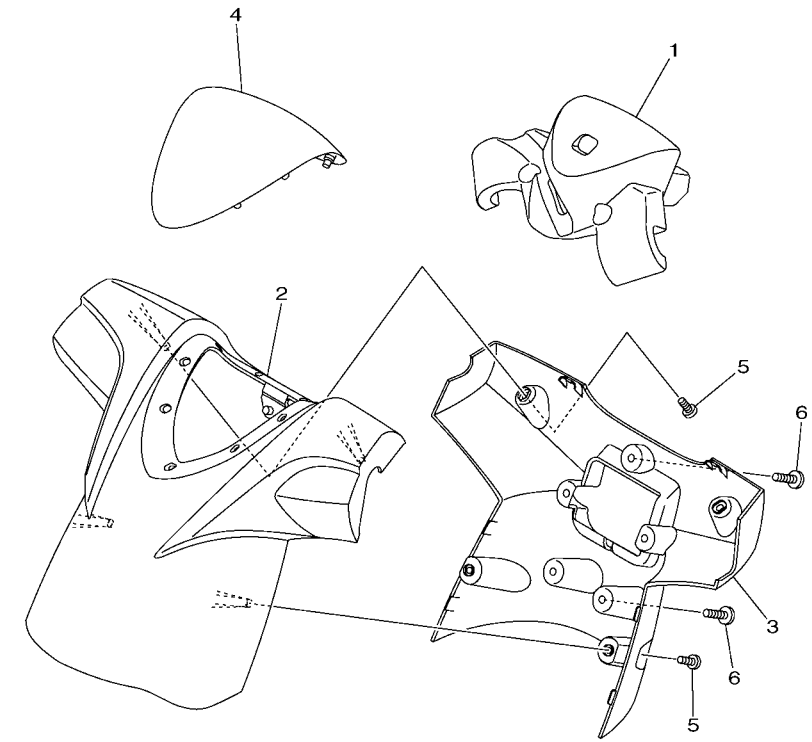

F2C1100-H360

## FIG. 36 STEERING 2

| REF. NO. | PART NO. | DESCRIPTION | CAN | EUR | GENE | | | REMARKS |
|---|---|---|---|---|---|---|---|---|
| 1 | F2C–U156E–00 | PAD 1 | 1 | 1 | 1 | | | |
| 2 | F2C–U143D–10 | PAD, STEERING 1 | 1 | 1 | 1 | | | |
| 3 | F2C–U143E–10 | PAD, STEERING 2 | 1 | 1 | 1 | | | |
| 4 | F1K–U142D–30 | COVER, PAD | 1 | 1 | 1 | | | |
| 5 | 90154–06017 | SCREW, BINDING | 4 | 4 | 4 | | | |
| 6 | 90149–05903 | SCREW | 5 | 5 | 5 | | | |

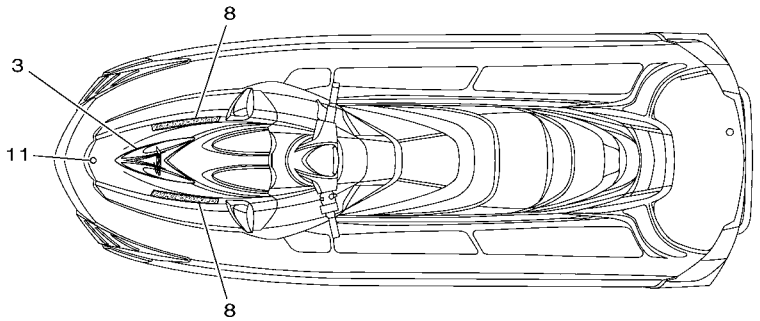


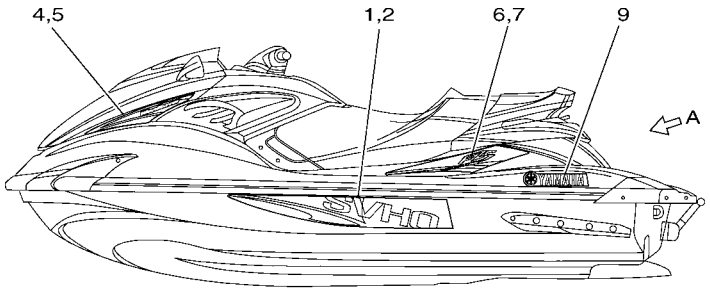


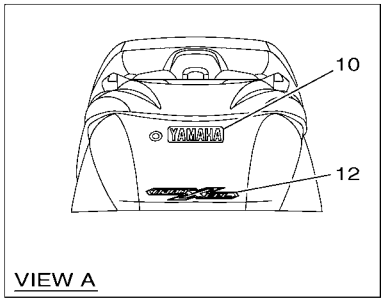


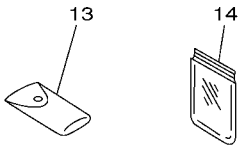





F3K1100-N370

## FIG. 37 GRAPHICS

| REF. NO. | PART NO. | DESCRIPTION | CAN | EUR | GENE | | | REMARKS |
|---|---|---|---|---|---|---|---|---|
| 1 | F3K–U417B–00 | GRAPHIC 1 (LH) | 1 | 1 | 1 | | | FOR YELLOW |
| | F3K–U417B–10 | GRAPHIC 1 (LH) | 1 | 1 | 1 | | | FOR BLACK |
| 2 | F3K–U417C–00 | GRAPHIC 2 (RH) | 1 | 1 | 1 | | | FOR YELLOW |
| | F3K–U417C–10 | GRAPHIC 2 (RH) | 1 | 1 | 1 | | | FOR BLACK |
| 3 | F3K–U417D–00 | GRAPHIC 3 | 1 | 1 | 1 | | | FOR YELLOW |
| | F3K–U417D–10 | GRAPHIC 3 | 1 | 1 | 1 | | | FOR BLACK |
| 4 | F3K–U417F–00 | GRAPHIC 5 (LH) | 1 | 1 | 1 | | | FOR YELLOW |
| | F3K–U417F–10 | GRAPHIC 5 (LH) | 1 | 1 | 1 | | | FOR BLACK |
| 5 | F3K–U417G–00 | GRAPHIC 6 (RH) | 1 | 1 | 1 | | | FOR YELLOW |
| | F3K–U417G–10 | GRAPHIC 6 (RH) | 1 | 1 | 1 | | | FOR BLACK |
| 6 | F3K–U417H–00 | GRAPHIC 7 (LH) | 1 | 1 | 1 | | | FOR YELLOW |
| | F3K–U417H–10 | GRAPHIC 7 (LH) | 1 | 1 | 1 | | | FOR BLACK |
| 7 | F3K–U417J–00 | GRAPHIC 8 (RH) | 1 | 1 | 1 | | | FOR YELLOW |
| | F3K–U417J–10 | GRAPHIC 8 (RH) | 1 | 1 | 1 | | | FOR BLACK |
| 8 | F2C–U417M–60 | GRAPHIC C | 2 | 2 | 2 | | | FOR YELLOW |
| | F3K–U417M–10 | GRAPHIC C | 2 | 2 | 2 | | | FOR BLACK |
| 9 | F2P–U411C–30 | EMBLEM, YAMAHA | 2 | 2 | 2 | | | FOR YELLOW |
| | F2P–U411C–A0 | EMBLEM, YAMAHA | 2 | 2 | 2 | | | FOR BLACK |
| 10 | F2P–U4114–30 | MARK, YAMAHA A | 1 | 1 | 1 | | | FOR YELLOW |
| | F2P–U4114–A0 | MARK, YAMAHA A | 1 | 1 | 1 | | | FOR BLACK |
| 11 | F1K–U411H–00 | EMBLEM, TUNING FORK | 1 | 1 | 1 | | | |
| 12 | F1W–U4121–00 | EMBLEM A | 1 | 1 | 1 | | | |
| 13 | F1B–65986–12 | TOOL SET | 1 | 1 | 1 | | | |
| 14 | EU0–65901–02 | TOOL BAG | 1 | 1 | 1 | | | |

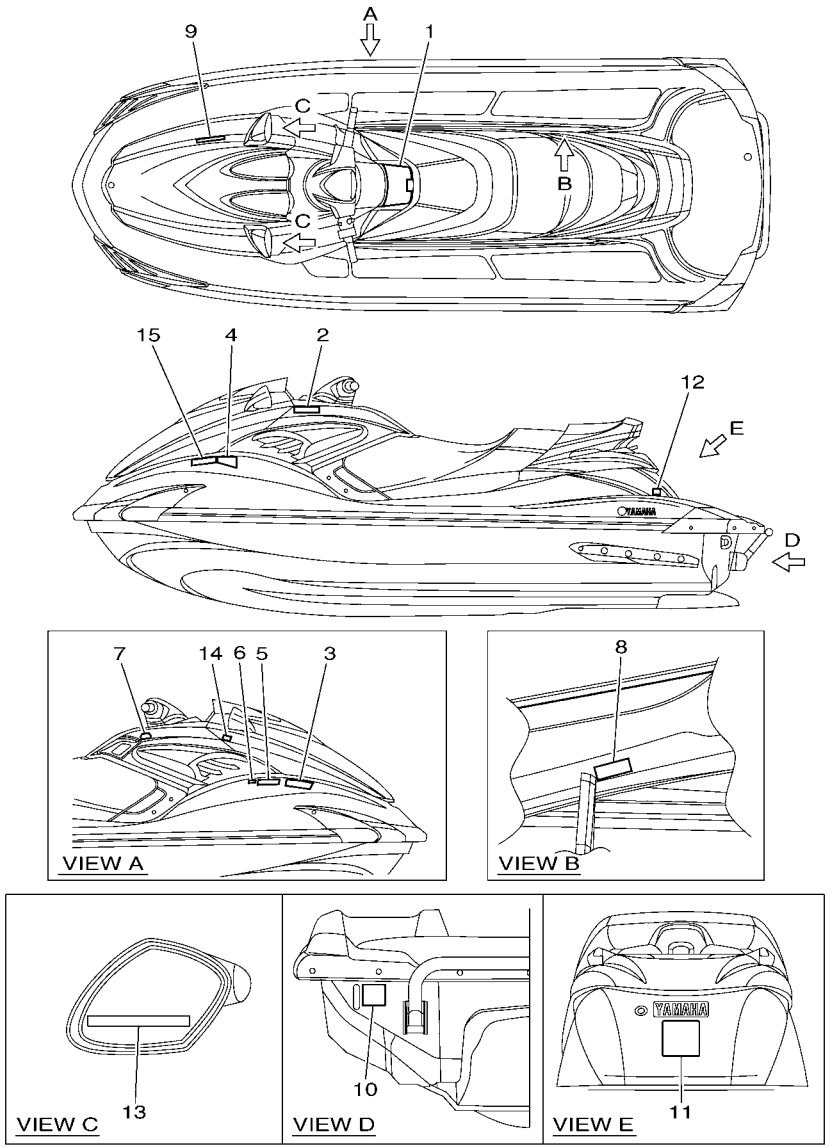


F3K1100-N380

## FIG. 38 IMPORTANT LABELS

| REF. NO. | PART NO. | DESCRIPTION | CAN | EUR | GENE | | | REMARKS |
|---|---|---|---|---|---|---|---|---|
| 1 | F2C–U41B1–10 | LABEL, WARNING UNIFORM 1 | 1 | 1 | 1 | | | |
| 2 | F1B–U41B1–21 | LABEL, WARNING UNIFORM 1 | 1 | 1 | 1 | | | |
| 3 | F1B–U41B1–31 | LABEL, WARNING UNIFORM 1 | 1 | 1 | 1 | | | |
| 4 | F1B–U41B2–01 | LABEL, WARNING UNIFORM 2 | 1 | 1 | 1 | | | |
| 5 | F3J–U415B–10 | LABEL, WARNING(FUEL) | 1 | 1 | 1 | | | |
| 6 | F3J–U419B–10 | LABEL 1 | 1 | 1 | 1 | | | |
| 7 | F0V–U41D5–31 | LABEL, WARNING SHIFT LEVER | 1 | 1 | 1 | | | |
| 8 | F0V–U41DB–12 | LABEL, WARNING BATTERY | 1 | 1 | 1 | | | |
| 9 | F1B–U41F5–21 | LABEL, FIRE EXTINGUISHER 1 | 1 | 1 | 1 | | | |
| 10 | F1G–U418F–00 | LABEL, RIGHTING | 1 | 1 | 1 | | | |
| 11 | F1S–U41E1–11 | LABEL, SET 1 | 1 | 1 | 1 | | | |
| 12 | F1S–U419E–01 | LABEL 4 | 1 | | | | | FOR CAN |
| 13 | GJ1–U419F–21 | LABEL,5 | 2 | 2 | 2 | | | |
| 14 | F1X–U413P–02 | LABEL, BUILDERS PLATE | | 1 | | | | FOR EUR |
| 15 | GP8–U416H–01 | LABEL,WARNING(FRANCE) | | 1 | | | | FOR EUR |

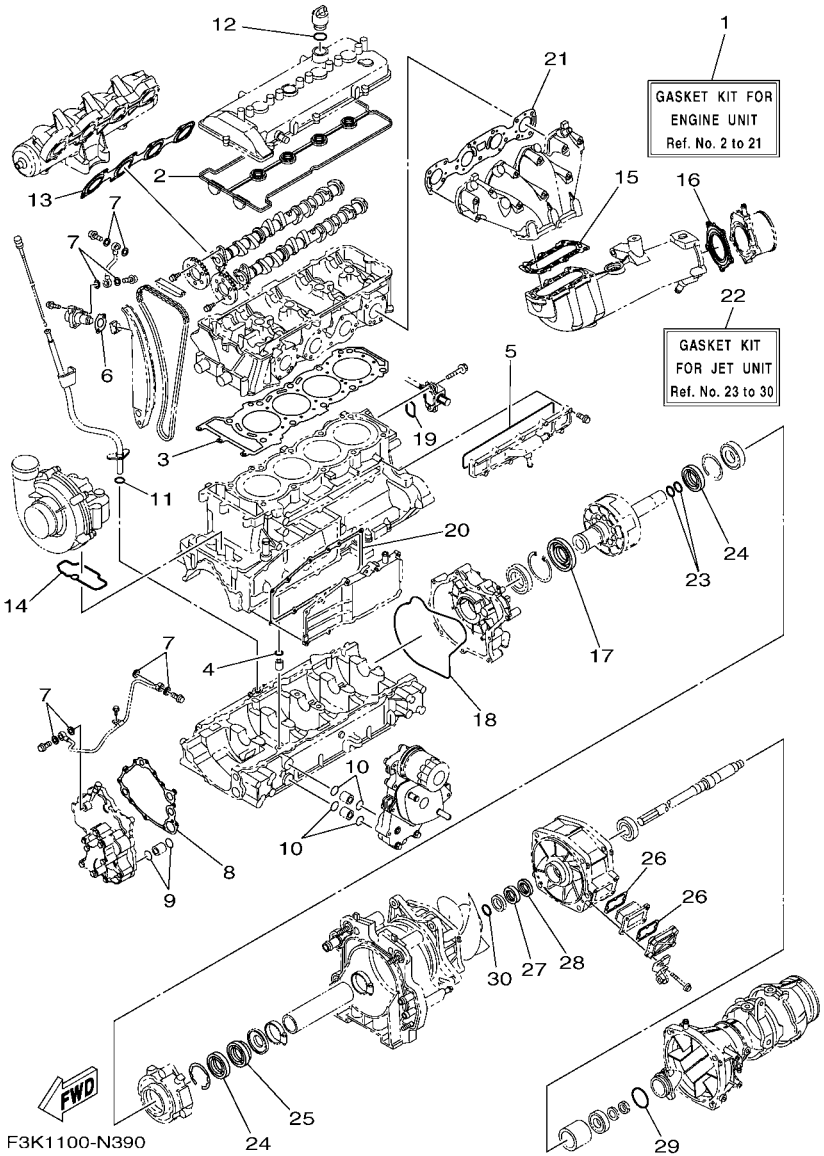


## FIG. 39 REPAIR KIT 1

| REF. NO. | PART NO. | DESCRIPTION | CAN | EUR | GENE | | | REMARKS |
|---|---|---|---|---|---|---|---|---|
| 1 | 6ET–W0001–00 | GASKET KIT FOR ENGINE UNIT | 1 | 1 | 1 | | | |
| 2 | 6BH–11193–00 | .GASKET, HEAD COVER 1 | 1 | 1 | 1 | | | |
| 3 | 6BH–11181–00 | .GASKET, CYLINDER HEAD 1 | 1 | 1 | 1 | | | |
| 4 | 93210–11453 | .O-RING | 1 | 1 | 1 | | | |
| 5 | 6CS–12517–00 | .GASKET, WATER INLET | 1 | 1 | 1 | | | |
| 6 | 6S5–121E2–00 | .GASKET | 1 | 1 | 1 | | | |
| 7 | 90430–10007 | .GASKET | 8 | 8 | 8 | | | |
| 8 | 6S5–13563–00 | .GASKET | 1 | 1 | 1 | | | |
| 9 | 93210–21631 | .O-RING | 2 | 2 | 2 | | | |
| 10 | 93210–18322 | .O-RING | 4 | 4 | 4 | | | |
| 11 | 93210–12016 | .O-RING | 1 | 1 | 1 | | | |
| 12 | 93210–24M79 | .O-RING | 1 | 1 | 1 | | | |
| 13 | 6BH–13645–00 | .GASKET, MANIFOLD 1 | 1 | 1 | 1 | | | |
| 14 | 6S5–1416A–00 | .O-RING | 1 | 1 | 1 | | | |
| 15 | 6S5–14739–00 | .GASKET, MUFFLER DAMPER 1 | 1 | 1 | 1 | | | |
| 16 | 6BH–14749–00 | .GASKET, MUFFLER DAMPER 2 | 1 | 1 | 1 | | | |
| 17 | 6S5–81167–10 | .OIL SEAL | 1 | 1 | 1 | | | |
| 18 | 6S5–81168–00 | .O-RING | 1 | 1 | 1 | | | |
| 19 | 93210–32172 | .O-RING | 1 | 1 | 1 | | | |
| 20 | 6BH–13557–00 | .GASKET | 1 | 1 | 1 | | | |
| 21 | 6ET–14613–00 | .GASKET, EXHAUST PIPE | 1 | 1 | 1 | | | |
| 22 | 6S5–W0001–22 | GASKET KIT FOR JET UNIT | 1 | 1 | 1 | | | |
| 23 | 93210–22MF1 | .O-RING | 2 | 2 | 2 | | | |
| 24 | 93102–29008 | .OIL SEAL | 2 | 2 | 2 | | | |
| 25 | 93102–29009 | .OIL SEAL | 1 | 1 | 1 | | | |
| 26 | 66V–42414–00 | .O-RING | 2 | 2 | 2 | | | |
| 27 | 93102–31009 | .OIL SEAL | 1 | 1 | 1 | | | |

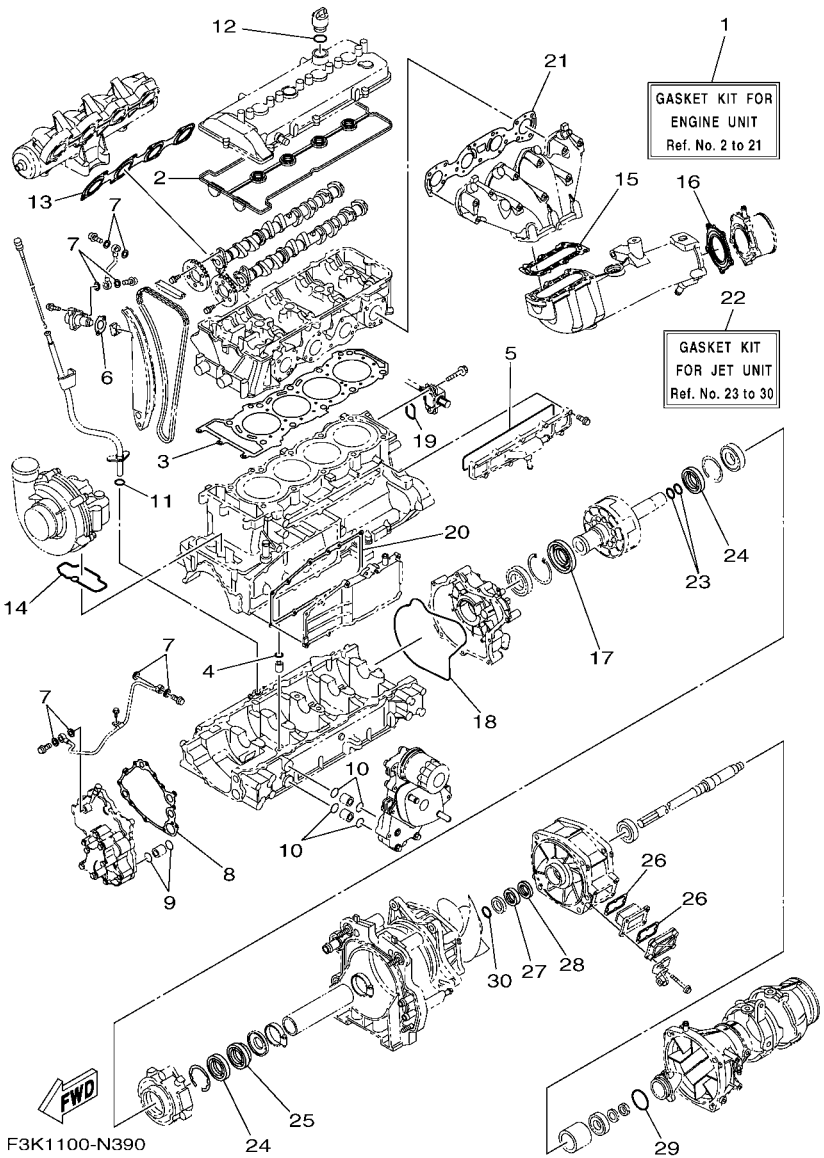


## FIG. 39 REPAIR KIT 1

| REF. NO. | PART NO. | DESCRIPTION | CAN | EUR | GENE | | | REMARKS |
|---|---|---|---|---|---|---|---|---|
| 28 | 93101–31001 | .OIL SEAL | 1 | 1 | 1 | | | |
| 29 | 6S5–5111K–00 | .O-RING 1 | 1 | 1 | 1 | | | |
| 30 | 93210–30611 | .O-RING | 1 | 1 | 1 | | | |

| PART NO. | REF. NO. |
|---|---|
| 6S5–11102–11 | 2 – 2 |
| 6BH–1111E–00 | 2 – 12 |
| 6S5–11133–10 | 2 – 3 |
| 6S5–11166–10 | 12 – 1 |
| 6S5–11167–10 | 12 – 5 |
| 6BH–11181–00 | 2 – 11 |
| | 39 – 3 |
| 6S5–11191–20 | 1 – 1 |
| 6BH–11193–00 | 1 – 3 |
| | 39 – 2 |
| 69J–11301–10 | 3 – 9 |
| 6S5–1131M–10–8P | 3 – 17 |
| 68V–11325–02 | 3 – 10 |
| 67F–11328–00 | 3 – 11 |
| 6S5–11377–00 | 3 – 16 |
| 6S5–11411–00 | 4 – 1 |
| 6S5–11416–00 | 4 – 2 |
| 6S5–11416–10 | 4 – 2 |
| 6S5–11416–20 | 4 – 2 |
| 6S5–11416–30 | 4 – 2 |
| 6S5–11416–40 | 4 – 2 |
| 6S5–11459–01 | 4 – 14 |
| 6S5–11603–00 | 4 – 4 |
| 6ET–11631–00–B0 | 4 – 3 |
| 6ET–11633–00 | 4 – 5 |
| 6S5–11650–10 | 4 – 7 |
| 6S5–11654–10 | 4 – 8 |
| 6S5–11656–40 | 4 – 9 |
| 6S5–11656–50 | 4 – 9 |
| 6S5–11656–60 | 4 – 9 |
| 6S5–11656–70 | 4 – 9 |
| 6S5–11941–10 | 1 – 8 |
| 6S5–12111–00 | 5 – 5 |
| 6S5–12113–00 | 5 – 8 |
| 6S5–12116–00 | 5 – 7 |
| 6S5–12117–00 | 5 – 9 |
| 3LD–12118–00 | 5 – 10 |
| 51Y–12119–00 | 5 – 11 |
| 6S5–12121–00 | 5 – 6 |
| 6S5–12153–00 | 5 – 13 |
| 3LD–12168–00 | 5 – 12 |
| 3LD–12168–20 | 5 – 12 |
| 3LD–12168–40 | 5 – 12 |
| 3LD–12168–60 | 5 – 12 |
| 3LD–12168–80 | 5 – 12 |
| 3LD–12168–A0 | 5 – 12 |
| 3LD–12168–F0 | 5 – 12 |
| 3LD–12168–H1 | 5 – 12 |

| PART NO. | REF. NO. |
|---|---|
| 3LD–12168–K1 | 5 – 12 |
| 3LD–12168–M1 | 5 – 12 |
| 3LD–12168–R1 | 5 – 12 |
| 3LD–12168–U1 | 5 – 12 |
| 3LD–12168–W1 | 5 – 12 |
| 3LD–12168–Y1 | 5 – 12 |
| 3LD–12169–11 | 5 – 12 |
| 3LD–12169–31 | 5 – 12 |
| 3LD–12169–50 | 5 – 12 |
| 3LD–12169–70 | 5 – 12 |
| 3LD–12169–90 | 5 – 12 |
| 3LD–12169–E0 | 5 – 12 |
| 3LD–12169–G0 | 5 – 12 |
| 3LD–12169–J0 | 5 – 12 |
| 3LD–12169–L0 | 5 – 12 |
| 6S5–12171–10 | 5 – 1 |
| 6D3–12176–10 | 5 – 3 |
| 6ET–12181–00 | 5 – 2 |
| 6S5–121E2–00 | 5 – 19 |
| | 39 – 6 |
| 6S5–12210–00 | 5 – 18 |
| 6S5–12228–01 | 2 – 7 |
| 6BH–12241–00 | 5 – 25 |
| 6BH–12251–00 | 5 – 24 |
| 6BH–12252–00 | 5 – 15 |
| 6BH–12279–00 | 5 – 16 |
| 6S5–12289–00 | 4 – 11 |
| 6D3–12411–00 | 2 – 14 |
| 6BH–12413–00 | 2 – 15 |
| 6S5–1243E–01 | 14 – 13 |
| 60E–12443–00 | 14 – 10 |
| 60E–1244E–00 | 22 – 40 |
| 6S5–1244H–00 | 14 – 28 |
| 6CS–12469–A0 | 3 – 21 |
| 6CS–12517–00 | 3 – 22 |
| | 39 – 5 |
| 6S5–12552–00 | 14 – 34 |
| 6S5–12576–01 | 14 – 47 |
| 6BH–12577–00 | 14 – 37 |
| 6S5–12578–00 | 2 – 17 |
| 6S5–12579–00 | 14 – 39 |
| 63M–12580–00 | 14 – 5 |
| 6ET–12581–10 | 14 – 4 |
| 6ET–12582–00 | 14 – 21 |
| 6BH–12584–00 | 14 – 17 |
| 6S5–12588–00 | 14 – 31 |
| 6S5–12589–01 | 14 – 26 |
| 6S5–12594–00 | 14 – 46 |

| PART NO. | REF. NO. |
|---|---|
| 6CS–12880–00 | 6 – 3 |
| 6S5–1310A–22 | 10 – 1 |
| 6BH–1319K–00 | 3 – 30 |
| 6S5–13300–22 | 9 – 1 |
| 6S5–13317–10 | 10 – 4 |
| 6S5–13337–10 | 3 – 24 |
| 6S5–13405–10 | 10 – 2 |
| 6S5–13416–00 | 9 – 7 |
| 6S5–13418–00 | 5 – 21 |
| 69J–13440–03 | 11 – 5 |
| 60E–13446–00 | 11 – 7 |
| 6S5–13446–10 | 9 – 5 |
| 6ET–13460–00 | 11 – 1 |
| 6ET–13470–00 | 11 – 2 |
| 6S5–13477–00 | 10 – 3 |
| 6S5–13532–00 | 6 – 18 |
| 8FP–13556–10 | 6 – 12 |
| 6BH–13557–00 | 3 – 18 |
| | 39 – 20 |
| 6ET–13557–00 | 11 – 3 |
| 6S5–13563–00 | 9 – 2 |
| | 39 – 8 |
| 6P2–13578–00 | 6 – 5 |
| 6P2–13588–00 | 6 – 4 |
| 6S5–13641–A2 | 6 – 2 |
| 6BH–13645–00 | 6 – 24 |
| | 39 – 13 |
| 6CS–13651–00 | 7 – 25 |
| 6ET–13670–00 | 7 – 12 |
| 6S5–13691–11 | 7 – 13 |
| 6S5–13750–10 | 6 – 1 |
| 6ET–13761–00 | 6 – 10 |
| 6S5–13907–00 | 23 – 1 |
| 6S5–14159–00 | 6 – 19 |
| 68V–1416A–00 | 6 – 11 |
| 6S5–1416A–00 | 7 – 4 |
| | 39 – 14 |
| 6S5–14199–00 | 7 – 3 |
| 6ET–141A0–01 | 7 – 1 |
| 6S5–14243–01 | 7 – 19 |
| 6S5–14285–00 | 6 – 15 |
| 6AN–14294–10 | 6 – 21 |
| 6D3–14305–21 | 22 – 1 |
| 6S5–14349–00 | 7 – 10 |
| 6S5–14360–10 | 6 – 9 |
| 6CS–14413–00 | 6 – 31 |
| 6S5–14435–00 | 7 – 18 |
| 6BH–14445–00 | 6 – 17 |

| PART NO. | REF. NO. |
|---|---|
| 6CS–14445–00 | 6 – 29 |
| 6CS–14446–00 | 6 – 6 |
| 6D3–1444B–00 | 6 – 13 |
| 6S5–14457–00 | 6 – 16 |
| 6S5–14496–00 | 6 – 8 |
| 6CS–14572–00 | 6 – 28 |
| 6ET–14613–00 | 13 – 1 |
| | 39 – 21 |
| 6BH–14711–10 | 13 – 2 |
| 6BH–14721–10 | 13 – 6 |
| 6S5–14739–00 | 13 – 7 |
| | 39 – 15 |
| 6BH–14749–00 | 13 – 14 |
| | 39 – 16 |
| 6CS–1475A–00 | 13 – 18 |
| 6S5–14771–00–94 | 13 – 11 |
| 6BH–14784–01–94 | 13 – 15 |
| 6CS–15100–11 | 3 – 1 |
| 6ET–15362–00 | 3 – 27 |
| 6S5–15363–00 | 1 – 9 |
| 6S5–15486–10 | 10 – 5 |
| 5EL–15511–00 | 20 – 6 |
| 6S5–15515–00 | 19 – 3 |
| 6S5–15517–00 | 19 – 5 |
| 6S5–15521–00 | 19 – 4 |
| 6S5–15590–00 | 19 – 1 |
| 6S5–17031–00 | 4 – 16 |
| 6S5–17525–01 | 4 – 13 |
| 6S5–17529–00 | 4 – 18 |
| 6S5–17553–00 | 4 – 22 |
| 6S5–17572–01 | 4 – 10 |
| 6S5–17585–10 | 4 – 21 |
| 6ET–17800–00 | 4 – 15 |
| EU0–23814–31 | 35 – 37 |
| 6S5–24300–01 | 6 – 20 |
| 70R–24489–00 | 31 – 4 |
| 70R–24543–00 | 31 – 3 |
| 6AN–26311–00 | 22 – 2 |
| 67F–2812A–00 | 21 – 23 |
| 6BH–41661–00–94 | 24 – 4 |
| 6BH–41662–00–94 | 24 – 5 |
| 66V–42414–00 | 15 – 9 |
| | 39 – 26 |
| 67X–44517–10 | 24 – 1 |
| 663–45119–00 | 16 – 11 |
| 6S5–45332–00–94 | 16 – 4 |
| 6EV–45511–00 | 15 – 17 |
| 6S5–45593–00–94 | 16 – 12 |

| PART NO. | REF. NO. |
|---|---|
| 6ET–45613–00 | 16 – 9 |
| 6S5–45813–01–94 | 4 – 12 |
| 6BH–4581J–00 | 16 – 1 |
| 6S5–5111K–00 | 15 – 21 |
| | 39 – 29 |
| 68N–5112T–00 | 27 – 3 |
| 6ET–51312–00 | 15 – 4 |
| 6ET–51315–00 | 15 – 7 |
| 6S5–51323–00 | 16 – 2 |
| 6BH–51348–01 | 15 – 24 |
| 6S5–52358–00 | 17 – 10 |
| F1K–6134M–00 | 35 – 24 |
| F2C–6134M–00 | 35 – 25 |
| F1K–61355–00 | 35 – 31 |
| F2C–61369–00 | 35 – 28 |
| F2C–613B0–00 | 35 – 21 |
| F1W–613C1–00 | 34 – 4 |
| F2C–61400–00 | 35 – 18 |
| F1K–6142B–00 | 35 – 32 |
| F1B–61438–00 | 34 – 19 |
| | 34 – 31 |
| F1W–61438–00 | 34 – 9 |
| F2C–6143C–00 | 35 – 26 |
| F1B–61460–00 | 34 – 14 |
| F2C–61460–00 | 34 – 33 |
| F2N–61460–00 | 34 – 22 |
| F1B–61461–02 | 34 – 21 |
| F2C–6146A–00 | 35 – 27 |
| F2C–61481–10 | 34 – 18 |
| F3K–6149C–00 | 34 – 30 |
| F3K–6150A–00 | 34 – 13 |
| F1W–61516–00 | 35 – 35 |
| F1B–6151S–00 | 34 – 10 |
| | 34 – 20 |
| | 34 – 32 |
| F2C–6151T–00 | 35 – 20 |
| F2C–6152M–00 | 35 – 23 |
| F1W–6153A–00 | 34 – 1 |
| F2C–6153E–00 | 34 – 8 |
| F1W–6153J–00 | 34 – 12 |
| F2C–6153R–00 | 35 – 30 |
| F1W–61557–00 | 34 – 11 |
| F1K–61624–00 | 27 – 20 |
| F0X–61637–00 | 27 – 23 |
| EU0–61652–00 | 14 – 12 |
| | 27 – 8 |
| F0X–61652–00 | 27 – 24 |
| GP7–61652–00 | 32 – 20 |

| PART NO. | REF. NO. |
|---|---|
| EW2–62142–00 | 31 – 2 |
| F1G–62149–00 | 31 – 8 |
| F2F–6214A–00 | 31 – 1 |
| GJ3–6215F–00 | 23 – 12 |
| F1B–62241–00 | 32 – 4 |
| F3K–6273B–00 | 18 – 19 |
| GU2–62875–02 | 25 – 20 |
| F2C–6287A–00 | 35 – 22 |
| F0X–6375E–00 | 30 – 40 |
| F2C–6514S–00 | 26 – 21 |
| F1W–6514T–00 | 26 – 22 |
| F1B–6517R–00 | 25 – 21 |
| GA7–65772–00 | 33 – 4 |
| EU0–65901–02 | 37 – 14 |
| F1B–65986–12 | 37 – 13 |
| F0D–67250–10 | 35 – 5 |
| F0D–67255–02 | 35 – 6 |
| EW2–67256–00 | 35 – 7 |
| F0D–67257–00 | 35 – 10 |
| EW2–67258–01 | 35 – 8 |
| EW2–67259–01 | 35 – 9 |
| F1X–6725F–01 | 35 – 11 |
| F2C–67410–01 | 35 – 19 |
| GH7–6753B–00 | 32 – 18 |
| F1S–67620–00 | 32 – 22 |
| FN8–6771K–00 | 31 – 17 |
| F2C–67743–00 | 31 – 42 |
| F2C–67743–10 | 31 – 43 |
| F1B–67747–00 | 31 – 15 |
| EU0–67767–31 | 31 – 30 |
| EW2–67821–00 | 33 – 3 |
| F2C–68090–00 | 23 – 15 |
| F2C–6820A–10 | 23 – 14 |
| GA7–68218–00 | 32 – 8 |
| 6S5–682E0–00 | 23 – 2 |
| F1W–68303–00 | 35 – 34 |
| F1W–6830K–00 | 34 – 38 |
| F2C–68310–00 | 35 – 12 |
| FK7–68312–02 | 35 – 15 |
| FK7–68313–02 | 35 – 16 |
| F1S–68341–00 | 35 – 36 |
| EW2–68348–00 | 35 – 13 |
| F2C–6838C–00 | 34 – 39 |
| 6S5–81167–10 | 19 – 13 |
| | 39 – 17 |
| 6S5–81168–00 | 19 – 17 |
| | 39 – 18 |
| 6S5–81315–00 | 22 – 28 |

| PART NO. | REF. NO. |
|---|---|
| 6S5–81328–00 | 19 – 18 |
| 66V–8132W–00 | 21 – 21 |
| 6S5–81337–20 | 19 – 11 |
| 6S5–81364–10 | 19 – 24 |
| 6S5–81410–11 | 19 – 7 |
| 6S5–81450–01 | 19 – 6 |
| 6S5–81800–00 | 20 – 1 |
| 6S5–81810–00 | 20 – 13 |
| 6S5–81820–00 | 20 – 12 |
| 6S5–81826–00 | 20 – 10 |
| 6S5–81830–00 | 20 – 3 |
| 6S5–81840–00 | 20 – 8 |
| 11H–81844–00 | 20 – 2 |
| 4G0–81844–00 | 20 – 4 |
| 66V–81844–00 | 21 – 22 |
| 5EL–81845–00 | 20 – 11 |
| 6BH–81845–00 | 21 – 2 |
| 3TB–81847–00 | 20 – 9 |
| 6BH–81847–00 | 21 – 24 |
| 1J7–81847–60 | 20 – 5 |
| 5A8–81850–10 | 20 – 14 |
| 6B6–81940–00 | 21 – 20 |
| 6S5–81942–11 | 21 – 3 |
| 60E–81950–00 | 21 – 18 |
| 68V–81950–00 | 21 – 19 |
| 6S5–81960–10 | 22 – 6 |
| 6S5–81972–01–94 | 22 – 8 |
| 6S5–81975–00 | 22 – 7 |
| EU0–82110–09 | 23 – 4 |
| 6S5–82115–00 | 21 – 10 |
| 6S5–82116–00 | 23 – 22 |
| 6S5–82117–00 | 21 – 11 |
| 67F–82151–00 | 21 – 13 |
| 67F–82151–10 | 21 – 14 |
| 67F–82151–30 | 21 – 15 |
| | 21 – 31 |
| 67F–82151–40 | 21 – 16 |
| | 21 – 17 |
| 6D3–82157–00 | 21 – 12 |
| 67F–8215B–00 | 21 – 32 |
| 6BH–82170–00 | 21 – 9 |
| 6S5–82310–00 | 22 – 14 |
| 6A0–82317–00 | 21 – 7 |
| 6BH–82380–00 | 6 – 7 |
| 68V–82504–00 | 22 – 27 |
| 60E–82556–00 | 23 – 3 |
| 60E–82560–01 | 22 – 22 |
| 1UA–82591–00 | 26 – 23 |
| 4B5–82599–00 | 21 – 29 |
| 6S5–8259E–00 | 21 – 26 |
| 6EV–8259L–00 | 21 – 28 |
| 6CS–8273J–00 | 22 – 31 |
| 60E–83627–00 | 21 – 4 |
| 682–84385–01 | 14 – 11 |
| 6CS–85516–00 | 3 – 31 |
| 6CS–8572F–00 | 3 – 29 |
| 6AN–85780–00 | 22 – 29 |
| 61A–85790–00 | 22 – 19 |
| 6AA–85790–00 | 22 – 35 |
| 6S5–85886–00 | 6 – 14 |
| 60E–85896–00 | 22 – 25 |
| 6EV–8591A–00 | 21 – 5 |
| 6EV–8591A–10 | 21 – 5 |
| 6B6–86261–00 | 23 – 23 |
| 6B6–86261–10 | 23 – 23 |
| 6B6–86265–00 | 23 – 24 |
| 6B6–86265–10 | 23 – 24 |
| 6ET–E110M–00 | 1 – 4 |
| 6S5–E118E–00 | 1 – 6 |
| 6S5–E1328–00 | 1 – 5 |
| 6ET–E2289–00 | 16 – 13 |
| 67X–E2590–10 | 14 – 49 |
| 6S5–E4410–01 | 8 – 5 |
| 6S5–E4419–00 | 8 – 11 |
| 6S5–E4436–00 | 8 – 7 |
| 6S5–E4451–00 | 8 – 6 |
| 6S5–E4752–00 | 13 – 17 |
| 6S5–G2717–00 | 8 – 8 |
| 6BH–G4532–00 | 24 – 2 |
| 6BH–G4574–00 | 24 – 3 |
| 6AN–G5214–00 | 15 – 10 |
| 6CS–G5538–00 | 15 – 13 |
| 6EV–G5831–00 | 15 – 1 |
| 6ET–G6882–00 | 15 – 8 |
| 6S5–R1142–10 | 8 – 12 |
| 6AN–R1190–00 | 15 – 37 |
| 6S5–R1313–01 | 15 – 34 |
| 6S5–R1314–02 | 17 – 3 |
| 6EV–R1318–00 | 15 – 26 |
| 6EV–R1321–00 | 15 – 23 |
| 6ET–R1326–00 | 15 – 20 |
| 6EV–R1333–00 | 18 – 1 |
| 6CS–R1341–00 | 17 – 1 |
| 6AN–R1341–01 | 18 – 2 |
| 6S5–R1381–01 | 16 – 17 |
| F2C–U1314–00 | 27 – 39 |
| F2C–U134A–03 | 34 – 26 |
| F1K–U142D–30 | 36 – 4 |
| F2N–U142L–00 | 25 – 4 |
| | 25 – 18 |
| | 25 – 47 |
| | 28 – 2 |
| | 28 – 22 |
| | 33 – 24 |
| | 33 – 27 |
| | 34 – 27 |
| | 34 – 35 |
| F2C–U143D–10 | 36 – 2 |
| F2C–U143E–10 | 36 – 3 |
| F2C–U143G–00 | 18 – 20 |
| EU0–U1461–02 | 17 – 13 |
| F2C–U1465–00 | 34 – 43 |
| F2C–U1467–01 | 34 – 34 |
| GH3–U146E–00 | 15 – 38 |
| F2C–U146G–01 | 34 – 36 |
| F2C–U151S–00 | 18 – 4 |
| F2C–U1552–00 | 35 – 1 |
| F2C–U1554–00 | 35 – 39 |
| GP7–U155D–01 | 35 – 2 |
| GP7–U155F–00 | 34 – 7 |
| | 35 – 3 |
| F2C–U156E–00 | 36 – 1 |
| F2N–U1628–02 | 30 – 12 |
| F2C–U1629–00 | 30 – 49 |
| F1B–U1653–02 | 30 – 16 |
| F2C–U1743–00 | 26 – 9 |
| F1W–U2127–01 | 29 – 1 |
| F2C–U213B–01 | 26 – 4 |
| F0X–U213G–01 | 29 – 3 |
| F1W–U2159–00 | 31 – 6 |
| F2C–U2187–01 | 29 – 8 |
| F2C–U2188–01 | 29 – 9 |
| F1W–U224E–00 | 32 – 1 |
| F1S–U2280–02 | 27 – 31 |
| F1S–U2285–00 | 27 – 32 |
| F1W–U250B–00 | 28 – 10 |
| | 28 – 17 |
| F2C–U2511–10 | 28 – 1 |
| F1B–U2512–10 | 28 – 4 |
| F1B–U2519–10 | 28 – 5 |
| F1W–U251D–20 | 28 – 23 |
| F1W–U251E–20 | 28 – 25 |
| F1W–U251L–01 | 28 – 24 |
| F1W–U251M–01 | 28 – 26 |
| F1W–U252E–20 | 28 – 8 |
| F1W–U252F–20 | 28 – 15 |
| F2C–U2624–01 | 30 – 20 |
| F2C–U2624–10 | 30 – 23 |
| F2C–U2624–20 | 30 – 21 |
| F2C–U2624–30 | 30 – 34 |
| | 30 – 51 |
| F1K–U2663–01 | 26 – 7 |
| F1W–U2664–01 | 30 – 3 |
| F1K–U266B–00 | 26 – 8 |
| F2C–U266C–00 | 26 – 12 |
| F2C–U266D–01 | 30 – 8 |
| F2C–U266E–00 | 30 – 46 |
| F1W–U2698–00 | 25 – 25 |
| F1W–U269B–00 | 27 – 7 |
| F2C–U2714–00 | 34 – 28 |
| F2C–U271B–20 | 30 – 50 |
| F2C–U2733–00 | 33 – 12 |
| F2C–U278A–00 | 27 – 36 |
| F2C–U278F–00 | 27 – 40 |
| F2C–U278G–00 | 27 – 43 |
| F2C–U278H–00 | 27 – 41 |
| | 27 – 44 |
| F2C–U278K–00 | 27 – 45 |
| F2C–U278L–00 | 27 – 42 |
| F1X–U2873–00 | 31 – 39 |
| F2C–U351H–10 | 28 – 30 |
| F2C–U351J–10 | 28 – 31 |
| F2C–U351K–10 | 28 – 32 |
| F2C–U351M–10 | 28 – 33 |
| F2C–U351N–10 | 28 – 34 |
| F2C–U351P–10 | 28 – 35 |
| F2C–U351R–10 | 28 – 36 |
| F2C–U351S–10 | 28 – 37 |
| F2C–U353B–20 | 25 – 43 |
| F2C–U353B–30 | 25 – 44 |
| F2C–U3581–10 | 28 – 29 |
| F2C–U371A–31 | 30 – 1 |
| F2C–U371B–31 | 30 – 2 |
| F2C–U372A–30 | 30 – 6 |
| F2C–U372B–30 | 30 – 7 |
| F2C–U375E–00 | 30 – 33 |
| F1W–U3768–01 | 26 – 10 |
| | 30 – 11 |
| F1B–U3774–00 | 30 – 38 |
| GH1–U3774–00 | 30 – 29 |
| F2C–U377B–02–P5 | 25 – 26 |
| F2C–U377B–02–P7 | 25 – 26 |
| F2C–U377C–02–P5 | 25 – 30 |
| F2C–U377C–02–P7 | 25 – 30 |
| F2C–U377H–00 | 27 – 38 |
| F2C–U377M–00 | 25 – 36 |
| F2C–U377N–00 | 25 – 37 |
| F2C–U378C–00 | 30 – 17 |
| F2C–U3850–00 | 30 – 9 |
| F1B–U3850–02 | 30 – 4 |
| F2P–U4114–30 | 37 – 10 |
| F2P–U4114–A0 | 37 – 10 |
| F2P–U411C–30 | 37 – 9 |
| F2P–U411C–A0 | 37 – 9 |
| F1K–U411H–00 | 37 – 11 |
| F1W–U4121–00 | 37 – 12 |
| F1X–U413P–02 | 38 – 14 |
| F3J–U415B–10 | 38 – 5 |
| GP8–U416H–01 | 38 – 15 |
| F3K–U417B–00 | 37 – 1 |
| F3K–U417B–10 | 37 – 1 |
| F3K–U417C–00 | 37 – 2 |
| F3K–U417C–10 | 37 – 2 |
| F3K–U417D–00 | 37 – 3 |
| F3K–U417D–10 | 37 – 3 |
| F3K–U417F–00 | 37 – 4 |
| F3K–U417F–10 | 37 – 4 |
| F3K–U417G–00 | 37 – 5 |
| F3K–U417G–10 | 37 – 5 |
| F3K–U417H–00 | 37 – 6 |
| F3K–U417H–10 | 37 – 6 |
| F3K–U417J–00 | 37 – 7 |
| F3K–U417J–10 | 37 – 7 |
| F3K–U417M–10 | 37 – 8 |
| F2C–U417M–60 | 37 – 8 |
| F1G–U418F–00 | 38 – 10 |
| F3J–U419B–10 | 38 – 6 |
| F1S–U419E–01 | 38 – 12 |
| GJ1–U419F–21 | 38 – 13 |
| F2C–U41B1–10 | 38 – 1 |
| F1B–U41B1–21 | 38 – 2 |
| F1B–U41B1–31 | 38 – 3 |
| F1B–U41B2–01 | 38 – 4 |
| F0V–U41D5–31 | 38 – 7 |
| F0V–U41DB–12 | 38 – 8 |
| F1S–U41E1–11 | 38 – 11 |
| F1B–U41F5–21 | 38 – 9 |
| F2C–U4256–00 | 32 – 24 |
| F1W–U4261–00 | 33 – 14 |
| F2C–U471E–00 | 26 – 35 |
| F2C–U471F–00 | 26 – 37 |
| F2C–U475B–00 | 26 – 11 |
| F1W–U475F–01 | 26 – 14 |
| F1W–U491K–00 | 28 – 3 |
| | 28 – 9 |
| | 28 – 16 |
| F1W–U4949–00 | 28 – 12 |
| | 28 – 19 |
| F2C–U4953–00 | 30 – 47 |
| F2C–U4953–10 | 30 – 15 |
| GP7–U4953–10 | 30 – 14 |
| F1W–U5148–00 | 26 – 5 |
| F2C–U515D–00 | 25 – 34 |
| F0X–U515E–01 | 25 – 6 |
| | 25 – 15 |
| F2C–U515N–01–P0 | 26 – 2 |
| F3J–U516R–00 | 26 – 13 |
| | 32 – 7 |
| F2C–U517B–02–P5 | 26 – 1 |
| F2C–U517B–02–P7 | 26 – 1 |
| F2C–U517C–01 | 26 – 17 |
| F2C–U517D–00 | 26 – 20 |
| F1X–U517E–01 | 25 – 13 |
| | 25 – 28 |
| | 25 – 33 |
| | 25 – 39 |
| | 25 – 42 |
| F1W–U517F–00 | 25 – 1 |
| F2C–U517H–01 | 25 – 19 |
| F2C–U517W–00 | 25 – 35 |
| F2C–U517X–00 | 25 – 40 |
| F2C–U518D–00 | 26 – 19 |
| F1W–U518E–02 | 26 – 30 |
| F2C–U519D–01 | 25 – 22 |
| F2C–U5508–02 | 25 – 9 |
| F1W–U555B–00 | 25 – 24 |
| F1W–U555D–02 | 25 – 2 |
| F2C–U5633–00 | 25 – 23 |
| F1K–U5772–04 | 23 – 7 |
| | 25 – 51 |
| | 31 – 37 |
| F2C–U591A–02 | 30 – 43 |
| F2C–U591C–00 | 30 – 44 |
| F2C–U591D–01 | 30 – 45 |
| F2C–U596B–00 | 26 – 34 |
| F2C–U596C–00 | 26 – 36 |
| F1K–U5983–01 | 25 – 49 |
| F2C–U721B–00 | 24 – 12 |

| PART NO. | REF. NO. |
|---|---|
| F2C–U721B–10 | 24 – 13 |
| GD0–U7249–00–05 | 16 – 19 |
| F2N–U7254–00 | 22 – 3 |
| 6AN–U72M2–00 | 15 – 27 |
| F2N–U732B–10 | 24 – 14 |
| EU0–U7354–00–01 | 24 – 9 |
| EU0–U7354–00–03 | 24 – 9 |
| EU0–U7354–00–05 | 24 – 9 |
| EU0–U7354–00–10 | 24 – 9 |
| EU0–U7354–00–20 | 24 – 9 |
| F1B–U751G–00 | 33 – 26 |
| F1S–U7525–01 | 32 – 2 |
| F2C–U753B–01 | 33 – 10 |
| F1W–U753C–01 | 33 – 15 |
| F1W–U7550–02 | 33 – 1 |
| F1W–U7555–01 | 33 – 6 |
| F2C–U7557–01 | 18 – 25 |
| F2C–U755G–00 | 33 – 23 |
| F2C–U7564–00 | 33 – 11 |
| GJ1–U7578–11 | 34 – 45 |
| F1S–U757B–01 | 33 – 25 |
| F3K–U757E–00 | 18 – 30 |
| F3K–U757F–00 | 18 – 31 |
| F1B–U758D–03 | 33 – 19 |
| F1W–U759B–00 | 31 – 44 |
| F1K–U759C–00 | 25 – 48 |
| | 33 – 16 |
| F1W–U759C–01 | 31 – 45 |
| | 33 – 17 |
| F1B–U761D–02 | 27 – 10 |
| F1B–U7626–00 | 32 – 10 |
| F1B–U7628–00 | 32 – 15 |
| F1W–U7629–00 | 32 – 13 |
| F1B–U7656–00 | 32 – 9 |
| F1B–U7698–01 | 32 – 6 |
| F1W–U7711–03 | 31 – 13 |
| F1W–U7711–12 | 31 – 13 |
| F1W–U771H–00 | 27 – 37 |
| 6CN–U773D–00 | 15 – 28 |
| F1B–U7773–00 | 31 – 14 |
| F2N–U7831–10 | 31 – 19 |
| GP7–U7832–01 | 31 – 20 |
| GP7–U7833–11 | 31 – 21 |
| GP7–U7834–10 | 31 – 24 |
| GP7–U7835–00 | 31 – 22 |
| GP7–U783F–00 | 31 – 27 |
| F2C–U7844–00 | 31 – 28 |
| F0D–U7856–10 | 31 – 36 |

| PART NO. | REF. NO. |
|---|---|
| F2C–U785G–00 | 31 – 34 |
| F0D–U785G–10 | 23 – 10 |
| F2H–U785H–00 | 31 – 31 |
| F2N–U8169–00 | 27 – 30 |
| F1K–U8211–01 | 23 – 6 |
| F1K–U821D–01 | 23 – 9 |
| F1K–U8221–00 | 23 – 5 |
| F1S–U8221–00 | 25 – 53 |
| | 33 – 2 |
| F1X–U822E–00 | 23 – 16 |
| F2C–U822E–01 | 34 – 42 |
| F1W–U826C–00 | 23 – 18 |
| F2C–U826C–00 | 30 – 26 |
| F1K–U826C–03 | 27 – 48 |
| F1X–U828E–01 | 25 – 11 |
| F1S–U828H–01 | 27 – 16 |
| F2P–U828K–00 | 25 – 50 |
| F1W–U828M–00 | 18 – 6 |
| | 18 – 16 |
| | 27 – 17 |
| | 29 – 4 |
| | 31 – 9 |
| | 32 – 23 |
| | 33 – 20 |
| | 34 – 49 |
| F2C–U82AA–00 | 25 – 5 |
| F1B–U8360–01 | 32 – 5 |
| F1W–U8376–00 | 23 – 20 |
| F1W–U8572–01 | 27 – 47 |
| F1G–U8572–02 | 18 – 22 |
| F2C–U8577–03 | 18 – 23 |
| F1W–U8831–01 | 33 – 18 |
| F2C–U883B–00 | 16 – 20 |
| F3K–U883E–00 | 16 – 21 |
| F2S–U883N–01 | 27 – 26 |
| F2S–U883P–01 | 27 – 27 |
| F2S–U883T–00 | 27 – 28 |
| F2R–U884B–00 | 25 – 14 |
| F2C–U8952–11 | 30 – 37 |
| F2C–U8952–20 | 30 – 28 |
| F3K–U895D–00 | 31 – 26 |
| F1S–U8K31–02 | 18 – 3 |
| 6ET–W0001–00 | 39 – 1 |
| 6S5–W0001–22 | 39 – 22 |
| 6ET–W009A–00–94 | 2 – 1 |
| 6ET–W009B–00–94 | 3 – 4 |
| 6S5–W1783–20 | 4 – 17 |
| 90101–05800 | 25 – 3 |

| PART NO. | REF. NO. |
|---|---|
| 90105–05020 | 7 – 2 |
| 90105–06028 | 1 – 2 |
| 90105–06035 | 2 – 16 |
| 90105–06903 | 22 – 15 |
| 90105–06M07 | 3 – 12 |
| 90105–07004 | 5 – 4 |
| 90105–07009 | 2 – 6 |
| 90105–08021 | 3 – 35 |
| 90105–08188 | 7 – 8 |
| 90105–08249 | 19 – 15 |
| 90105–08860 | 27 – 29 |
| 90105–10071 | 3 – 5 |
| 90109–06218 | 26 – 24 |
| | 26 – 26 |
| 90109–06233 | 34 – 15 |
| 90109–06268 | 3 – 34 |
| 90109–06832 | 16 – 22 |
| 90109–06874 | 24 – 10 |
| 90109–06875 | 24 – 11 |
| 90109–08041 | 18 – 29 |
| 90110–05908 | 34 – 6 |
| | 35 – 4 |
| 90110–06040 | 27 – 25 |
| 90110–06182 | 3 – 25 |
| 90110–06822 | 15 – 22 |
| 90110–06823 | 25 – 45 |
| 90110–08212 | 19 – 2 |
| 90111–06114 | 28 – 14 |
| | 28 – 21 |
| 90116–08032 | 6 – 26 |
| 90116–10044 | 7 – 20 |
| 90119–05803 | 25 – 8 |
| 90119–059U4 | 26 – 18 |
| 90119–06048 | 22 – 10 |
| 90119–06091 | 21 – 25 |
| 90119–06827 | 18 – 33 |
| 90119–06880 | 25 – 16 |
| | 25 – 27 |
| | 25 – 31 |
| | 25 – 38 |
| | 25 – 41 |
| 90119–06882 | 25 – 17 |
| | 25 – 32 |
| 90119–06891 | 16 – 16 |
| | 17 – 2 |
| | 24 – 16 |
| 90119–06893 | 15 – 5 |
| 90119–06895 | 26 – 29 |

| PART NO. | REF. NO. |
|---|---|
| 90119–06897 | 15 – 11 |
| 90119–069UH | 26 – 31 |
| | 31 – 41 |
| 90119–069UP | 30 – 5 |
| | 30 – 10 |
| 90119–069UX | 17 – 6 |
| 90119–06M35 | 21 – 6 |
| 90119–06MA3 | 22 – 9 |
| | 22 – 33 |
| 90119–08034 | 13 – 4 |
| | 13 – 10 |
| 90119–08074 | 6 – 33 |
| 90119–08096 | 13 – 12 |
| 90119–08097 | 13 – 5 |
| | 13 – 9 |
| 90119–08099 | 6 – 32 |
| 90119–08823 | 18 – 21 |
| | 24 – 8 |
| 90119–08836 | 35 – 40 |
| 90119–08840 | 17 – 4 |
| 90119–08844 | 27 – 46 |
| 90119–08851 | 15 – 35 |
| | 15 – 41 |
| 90119–08859 | 24 – 7 |
| 90119–089U7 | 18 – 26 |
| | 31 – 40 |
| 90119–089UT | 21 – 1 |
| 90119–089UU | 16 – 18 |
| | 35 – 38 |
| 90119–08M22 | 8 – 3 |
| | 22 – 12 |
| 90119–10011 | 7 – 24 |
| 90119–10029 | 13 – 13 |
| 90119–10046 | 7 – 16 |
| 90119–10047 | 7 – 15 |
| 90119–10806 | 15 – 33 |
| 90119–10808 | 18 – 24 |
| 90119–10810 | 15 – 3 |
| 90149–05903 | 25 – 7 |
| | 26 – 3 |
| | 36 – 6 |
| 90149–06229 | 19 – 8 |
| 90149–10052 | 24 – 6 |
| 90150–05807 | 18 – 5 |
| | 34 – 40 |
| 90154–06017 | 34 – 29 |
| | 36 – 5 |
| 90169–049U1 | 31 – 23 |

| PART NO. | REF. NO. |
|---|---|
| 90170–20802 | 15 – 19 |
| 90176–08080 | 6 – 27 |
| 90176–10001 | 7 – 21 |
| 90183–06902 | 26 – 28 |
| 90201–052E8 | 19 – 21 |
| 90201–06028 | 7 – 9 |
| | 10 – 8 |
| 90201–06801 | 17 – 8 |
| | 17 – 11 |
| 90201–068G7 | 25 – 29 |
| 90201–068M4 | 15 – 39 |
| 90201–06906 | 34 – 23 |
| 90201–099U3 | 30 – 18 |
| | 34 – 16 |
| 90201–109U6 | 30 – 30 |
| 90201–12039 | 2 – 8 |
| 90201–132G5 | 4 – 19 |
| 90202–08002 | 34 – 17 |
| 90267–329UR | 31 – 25 |
| 90267–48020 | 26 – 32 |
| 90267–48802 | 18 – 7 |
| | 18 – 18 |
| | 27 – 18 |
| | 33 – 22 |
| 90267–48806 | 29 – 2 |
| | 34 – 46 |
| | 35 – 41 |
| 90267–48807 | 25 – 46 |
| | 26 – 6 |
| 90267–48825 | 28 – 27 |
| 90267–489U1 | 14 – 50 |
| | 22 – 4 |
| | 23 – 8 |
| | 23 – 19 |
| | 23 – 21 |
| | 25 – 52 |
| | 27 – 49 |
| | 30 – 27 |
| | 31 – 38 |
| | 33 – 5 |
| 90267–489U2 | 18 – 8 |
| | 24 – 15 |
| | 31 – 5 |
| 90267–489U6 | 18 – 14 |
| | 28 – 11 |
| | 28 – 13 |
| | 28 – 18 |
| | 28 – 20 |

| PART NO. | REF. NO. |
|---|---|
| 90267–489U6 | 29 – 5 |
| | 31 – 7 |
| | 31 – 10 |
| | 32 – 25 |
| | 34 – 47 |
| 90267–489U8 | 27 – 11 |
| | 28 – 6 |
| | 28 – 28 |
| 90269–08801 | 26 – 15 |
| 90280–03047 | 19 – 10 |
| 90387–05800 | 34 – 5 |
| 90387–06080 | 18 – 32 |
| 90387–06119 | 21 – 8 |
| 90387–06289 | 16 – 15 |
| 90387–06M05 | 19 – 22 |
| 90387–06M30 | 17 – 7 |
| 90387–08M06 | 15 – 36 |
| | 15 – 42 |
| 90387–08M30 | 17 – 5 |
| 90387–08M37 | 8 – 2 |
| | 22 – 11 |
| 90387–11007 | 7 – 17 |
| 90387–11008 | 7 – 22 |
| 90401–10040 | 5 – 23 |
| | 9 – 8 |
| 90430–06M03 | 3 – 13 |
| 90430–08209 | 10 – 10 |
| 90430–10007 | 5 – 22 |
| | 9 – 9 |
| | 39 – 7 |
| 90430–12002 | 18 – 27 |
| 90430–16910 | 32 – 19 |
| 90445–14804 | 15 – 30 |
| 90445–16013 | 14 – 43 |
| 90445–18017 | 14 – 18 |
| | 14 – 23 |
| 90445–20800 | 27 – 4 |
| 90445–20804 | 27 – 1 |
| 90445–21807 | 14 – 8 |
| 90445–21813 | 14 – 1 |
| 90446–10MH3 | 22 – 20 |
| 90446–24M89 | 14 – 35 |
| 90446–27M55 | 27 – 5 |
| 90446–27M73 | 27 – 2 |
| 90447–07001 | 34 – 25 |
| 90447–19004 | 14 – 19 |
| | 14 – 24 |
| 90447–19006 | 14 – 32 |

| PART NO. | REF. NO. |
|---|---|
| 90447–19011 | 14 – 29 |
| | 14 – 40 |
| 90447–19017 | 6 – 22 |
| 90447–19801 | 14 – 7 |
| 90447–22011 | 14 – 14 |
| 90447–22015 | 12 – 2 |
| 90447–22016 | 12 – 6 |
| 90447–22801 | 14 – 2 |
| 90447–22802 | 14 – 9 |
| 90447–28004 | 32 – 12 |
| | 32 – 16 |
| 90447–28008 | 2 – 18 |
| 90450–17M17 | 6 – 23 |
| 90450–70006 | 7 – 26 |
| 90450–75003 | 7 – 11 |
| 90450–90002 | 7 – 27 |
| | 8 – 4 |
| 90450–99015 | 13 – 20 |
| 90450–99016 | 13 – 19 |
| 90450–99801 | 33 – 8 |
| 90450–99804 | 33 – 9 |
| 90464–17800 | 31 – 12 |
| 90464–20008 | 22 – 34 |
| 90464–31001 | 22 – 18 |
| | 22 – 30 |
| | 22 – 36 |
| 90464–31002 | 22 – 37 |
| 90464–32801 | 18 – 9 |
| | 18 – 12 |
| | 18 – 17 |
| | 27 – 19 |
| | 27 – 52 |
| | 31 – 11 |
| | 33 – 21 |
| | 34 – 48 |
| 90464–35132 | 14 – 22 |
| 90464–40825 | 34 – 44 |
| 90464–99801 | 18 – 13 |
| 90464–99804 | 29 – 6 |
| 90465–11829 | 23 – 13 |
| | 31 – 32 |
| | 31 – 33 |
| | 31 – 35 |
| | 34 – 37 |
| | 34 – 41 |
| 90465–13M18 | 21 – 30 |
| | 22 – 17 |
| 90465–14M66 | 21 – 33 |

| PART NO. | REF. NO. |
|---|---|
| 90467–089U1 | 23 – 11 |
| 90467–14803 | 15 – 31 |
| | 32 – 14 |
| | 32 – 21 |
| 90467–150A1 | 3 – 32 |
| | 14 – 30 |
| 90467–150A5 | 14 – 6 |
| 90467–160A0 | 14 – 20 |
| | 14 – 25 |
| | 14 – 33 |
| | 14 – 38 |
| | 14 – 41 |
| | 14 – 44 |
| 90467–170A4 | 14 – 36 |
| 90467–170A5 | 14 – 42 |
| 90467–17802 | 33 – 13 |
| 90467–18804 | 27 – 6 |
| 90467–190A0 | 12 – 3 |
| | 12 – 4 |
| 90467–200A0 | 27 – 14 |
| 90467–200A3 | 12 – 8 |
| | 14 – 3 |
| | 14 – 15 |
| | 14 – 16 |
| | 14 – 27 |
| | 14 – 45 |
| | 14 – 48 |
| 90467–21800 | 27 – 12 |
| 90467–240A0 | 2 – 19 |
| | 12 – 7 |
| 90467–25801 | 32 – 11 |
| 90467–26800 | 32 – 3 |
| | 32 – 17 |
| | 32 – 26 |
| 90480–19800 | 25 – 12 |
| 90480–20132 | 22 – 38 |
| 90480–21M63 | 7 – 23 |
| 90480–22801 | 8 – 10 |
| 90480–22M15 | 8 – 1 |
| | 22 – 13 |
| 90480–38800 | 27 – 15 |
| 90601–118UF | 15 – 29 |
| | 27 – 9 |
| 90601–152U3 | 16 – 23 |
| 90601–155U4 | 31 – 29 |
| 90601–162U5 | 31 – 18 |
| 90601–170UG | 33 – 7 |
| 90601–200U1 | 18 – 10 |

| PART NO. | REF. NO. |
|---|---|
| 90601–200U1 | 23 – 17 |
| | 27 – 13 |
| 90601–200U7 | 29 – 7 |
| 90605–502U1 | 26 – 16 |
| 90605–502U2 | 25 – 10 |
| 91314–06020 | 9 – 4 |
| 91314–06060 | 10 – 7 |
| 91317–05010 | 19 – 20 |
| 91317–06014 | 19 – 19 |
| 91380–06016 | 22 – 26 |
| 91380–06020 | 19 – 23 |
| 91380–06025 | 5 – 20 |
| 91809–16002 | 2 – 4 |
| | 2 – 5 |
| 92014–06012 | 2 – 13 |
| | 22 – 39 |
| 92903–06600 | 2 – 10 |
| 92903–08600 | 20 – 16 |
| 9290P–20600 | 15 – 18 |
| 92990–06100 | 20 – 17 |
| | 34 – 3 |
| 92990–06200 | 34 – 2 |
| 92990–10600 | 22 – 21 |
| 92990–12200 | 18 – 28 |
| | 27 – 22 |
| | 30 – 39 |
| 92995–06600 | 22 – 24 |
| 92995–08600 | 3 – 15 |
| 9299R–05200 | 18 – 11 |
| | 27 – 34 |
| | 28 – 7 |
| 9299R–08200 | 26 – 38 |
| | 27 – 51 |
| | 30 – 24 |
| | 30 – 36 |
| 9299R–10200 | 30 – 22 |
| | 30 – 31 |
| | 30 – 41 |
| 93101–31001 | 15 – 16 |
| | 39 – 28 |
| 93102–29008 | 16 – 5 |
| | 39 – 24 |
| 93102–29009 | 16 – 8 |
| | 39 – 25 |
| 93102–31009 | 15 – 15 |
| | 39 – 27 |
| 93210–06632 | 3 – 28 |
| 93210–11453 | 3 – 3 |

| PART NO. | REF. NO. |
|---|---|
| 93210–11453 | 39 – 4 |
| 93210–12016 | 3 – 33 |
| | 39 – 11 |
| 93210–18322 | 11 – 8 |
| | 39 – 10 |
| 93210–21631 | 9 – 6 |
| | 39 – 9 |
| 93210–22MF1 | 16 – 3 |
| | 39 – 23 |
| 93210–24M79 | 1 – 10 |
| | 39 – 12 |
| 93210–30611 | 15 – 25 |
| | 39 – 30 |
| 93210–32172 | 22 – 32 |
| | 39 – 19 |
| 93306–00805 | 19 – 12 |
| 93306–20654 | 15 – 12 |
| 93306–20655 | 16 – 7 |
| 93306–30537 | 15 – 14 |
| 93410–12003 | 20 – 7 |
| 93450–24028 | 4 – 6 |
| 93450–66156 | 16 – 6 |
| 93604–10M03 | 3 – 8 |
| | 7 – 5 |
| 93606–12019 | 3 – 7 |
| | 9 – 3 |
| | 13 – 8 |
| | 15 – 6 |
| | 15 – 32 |
| | 16 – 14 |
| 93608–16M16 | 13 – 3 |
| 93700–06M03 | 16 – 10 |
| 94591–66152 | 5 – 14 |
| 94702–00435 | 22 – 16 |
| 95023–06012 | 6 – 30 |
| | 9 – 10 |
| 95024–06014 | 3 – 19 |
| 95024–06020 | 3 – 20 |
| | 10 – 12 |
| 95024–06035 | 10 – 11 |
| 95024–08035 | 13 – 16 |
| 95380–06700 | 20 – 18 |
| 9538R–06600 | 17 – 9 |
| | 17 – 12 |
| 9538R–06700 | 15 – 40 |
| | 34 – 24 |
| 9538R–08600 | 30 – 35 |
| 95720–06300 | 26 – 25 |

| PART NO. | REF. NO. |
|---|---|
| 95720–06300 | 35 – 29 |
| 95720–08300 | 35 – 33 |
| 9572R–05300 | 27 – 35 |
| 9572R–06300 | 26 – 27 |
| | 26 – 33 |
| | 31 – 16 |
| 9572R–08300 | 26 – 39 |
| | 27 – 50 |
| | 30 – 13 |
| | 30 – 19 |
| | 30 – 25 |
| 9572R–10300 | 18 – 15 |
| | 30 – 32 |
| | 30 – 42 |
| | 30 – 48 |
| 95780–08300 | 22 – 5 |
| 95814–06012 | 1 – 7 |
| 95814–06030 | 5 – 17 |
| 95814–06035 | 3 – 23 |
| 95814–06065 | 7 – 7 |
| 95814–06070 | 3 – 6 |
| 95814–08020 | 10 – 9 |
| 95814–08030 | 11 – 4 |
| 95814–08050 | 11 – 6 |
| 95814–08065 | 7 – 6 |
| 95817–06014 | 10 – 6 |
| 97013–06055 | 2 – 9 |
| 97013–08030 | 20 – 15 |
| 97095–06016 | 22 – 23 |
| 97095–08040 | 3 – 14 |
| 97513–05514 | 19 – 9 |
| 97513–08535 | 6 – 25 |
| 97780–60516 | 8 – 9 |
| 97780–60520 | 21 – 27 |
| 97880–03008 | 35 – 14 |
| 97880–05025 | 35 – 17 |
| 9788R–05025 | 27 – 33 |
| 99009–24700 | 4 – 20 |
| 99009–72500 | 19 – 14 |
| 99530–10114 | 3 – 2 |
| | 3 – 26 |
| | 19 – 16 |
| 99590–14016 | 7 – 14 |
| | 15 – 2 |
| 99780–12600 | 27 – 21 |

| PART NO. | REF. NO. |
|---|---|