YAMAHA

PARTS CATALOGUE

WaveRunner FX SHO

FA1800-P (F2SN/6CSK/6CS3)
FA1800-P (F2SP/6CSL/6CS3)
FA1800-P (F2SR/6CSM/6CS3)

1PF2S-100EA

( )

YAMAHA
GENUINE
Parts & Accessories

FA1800-P
PARTS CATALOGUE
©2014 by Yamaha Motor Co., Ltd.
1st edition, September 2014
All rights reserved.
Any reprinting or unauthorized use
without the written permission of
Yamaha Motor Co., Ltd.
is expressly prohibited.
Printed in Japan.

FOREWORD

This Parts Catalogue is related to the parts for the model(s) on the cover page. When you are ordering replacement parts, please refer to this Parts Catalogue and quote both part numbers and part names correctly.

1. Modifications or additions which have been made after the issue of the Parts Catalogue will be announced in the Parts News.
   It is advisable that you make the necessary corrections to the Parts Catalogue according to the Parts News.

2. Abbreviations
   The following abbreviations are used in this Parts Catalogue.

   “UR” Use specified parts number.
   “UN” Use as many as needed.
   “AP” Alternate Parts
   “LM” Locally Made (Parts need to be ordered locally)
   “F#” Frame No. (Applicable machine No.)
   “O/S” Over Size

3. The number of components for assembly
   - Parts, which are to be supplied in an assembly, are listed with a dot (.) in front of the part name as shown below.
   - The numeral appearing to the right of each component part indicates the quantity of parts for each assembly unit.

PART NO.	DESCRIPTION	Q’TY	REMARKS
2F5–83310–60	FRONT FLASHER LIGHT ASSY	2	
115–83311–60	.BULB (6V–18W)	1	

4. Applicable colours of graphics are represented in the “REMARKS” as shown below.

PART NO.	DESCRIPTION	Q’TY	REMARKS
2N4–24110–00–X5	FUEL TANK COMP.	2	MXR
3J1–24240–10	.GRAPHIC, FUEL TANK	1	FOR MXR

5. Note that the illustrations for reference in finding parts numbers are not to be used for assembling. When assembling, please use the applicable service manual.

6. The asterisk (*) before a reference number indicates modified items after the first edition.

7. Applicable Serial No.

Engine Serial No.

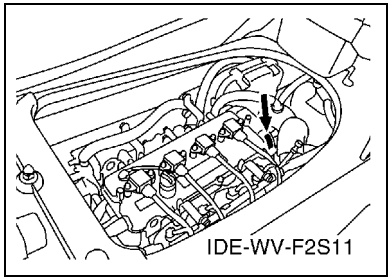

Primary Identification No.

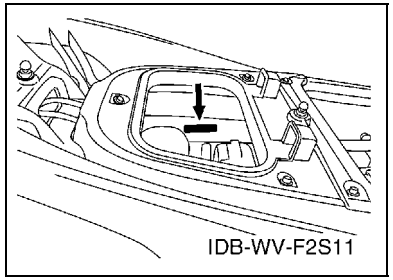

8. Applicable Colour Code (The (*) mark shows Model colour.)

Abbreviation	Colour Name	Colour Code
DNMC(*)	DARK GRAY METALLIC C	0922

9. Quantity Column Information

Column No.	Name Of Q'ty Column	Destination
1	CAN	CANADA
2	EUR	EUROPE
3	GENE	EXCEPT CANADA, EUROPE

10. Applicable Starting Serial No.

Engine Serial No.

Serial No.	Name Of Q'ty Column	Model Code
6CS-1012101	CAN	6CSK
6CS-1012101	EUR	6CSM
6CS-1012101	GENE	6CSL

Primary Identification No.

Serial No.	Name Of Q'ty Column	Model Code
F2S-812201	CAN	F2SN
F2S-812201	EUR	F2SR
F2S-812201	GENE	F2SP

CONTENTS

CYLINDER 1 1
CYLINDER 2 2
CRANKCASE 3
CRANKSHAFT & PISTON 5
VALVE 7
INTAKE 1 9
INTAKE 2 11
INTAKE 3 12
OIL PUMP 13
OIL PAN 14
OIL COOLER 15
BREATHER OIL 16
EXHAUST 1 17
EXHAUST 2 18
JET UNIT 1 20
JET UNIT 2 22
JET UNIT 3 23
JET UNIT 4 24
GENERATOR 26
STARTING MOTOR 27
ELECTRICAL 1 28
ELECTRICAL 2 30
ELECTRICAL 3 32
ENGINE MOUNT 34
ENGINE HATCH 1 35
ENGINE HATCH 2 37
HULL & DECK 39
HULL & DECK 2 41
GUNWALE & MAT 42
VENTILATION 43
SEAT & UNDER LOCKER 44
SEAT & UNDER LOCKER 2 45
FUEL TANK 47
BILGE PUMP 49
EXHAUST 3 50
CONTROL CABLE 51
STEERING 1 52
STEERING 2 53
STEERING 3 55
GRAPHICS 56
IMPORTANT LABELS 57
REPAIR KIT 1 58

INDEX

NUMERICAL INDEX 60

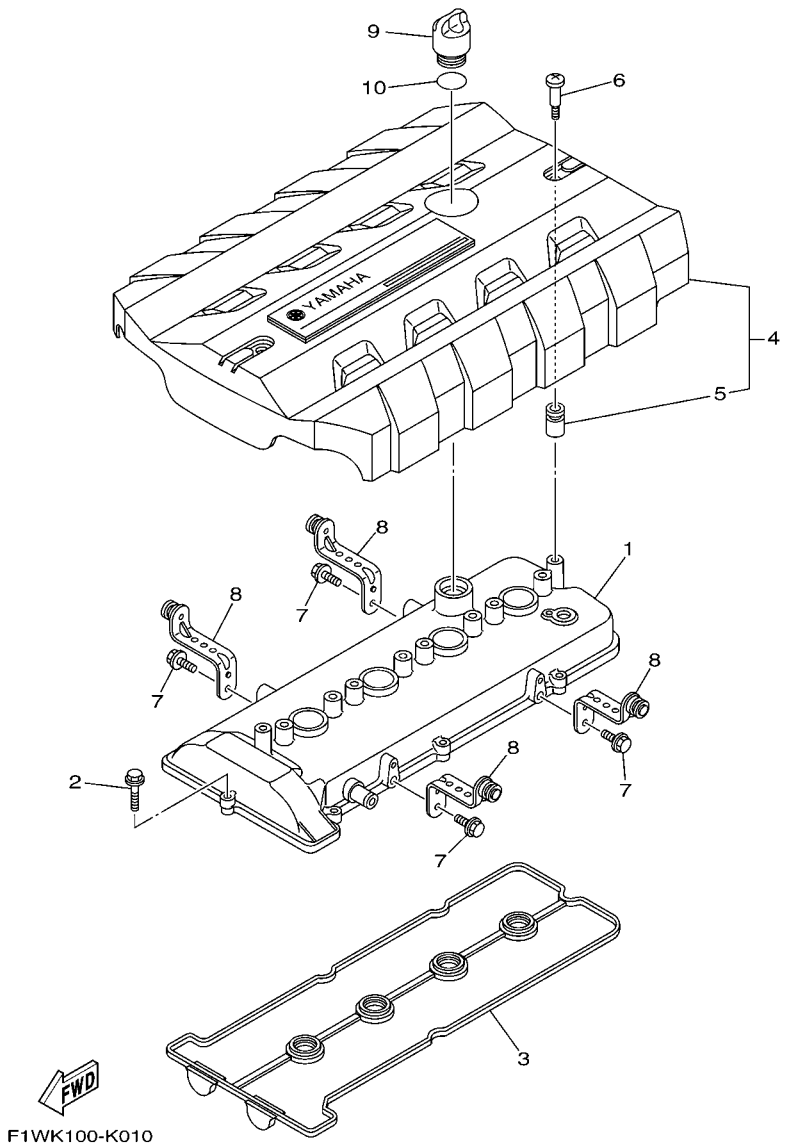

FIG. 1 CYLINDER 1

REF. NO.	PART NO.	DESCRIPTION	CAN	EUR	GENE			REMARKS
1	6S5–11191–20	COVER, CYLINDER HEAD 1	1	1	1			
2	90105–06028	BOLT, FLANGE	8	8	8			
3	6BH–11193–00	GASKET, HEAD COVER 1	1	1	1			
4	6CS–E110M–00	COVER ASSY 1	1	1	1			
5	6S5–E1328–00	.GROMMET, ANODE	2	2	2			
6	6S5–E118E–00	BOLT, COVER MOUNTING	2	2	2			
7	95814–06012	BOLT, FLANGE	4	4	4			
8	6S5–11941–10	STAY	4	4	4			
9	6S5–15363–00	PLUG, OIL	1	1	1			
10	93210–24M79	O-RING	1	1	1			

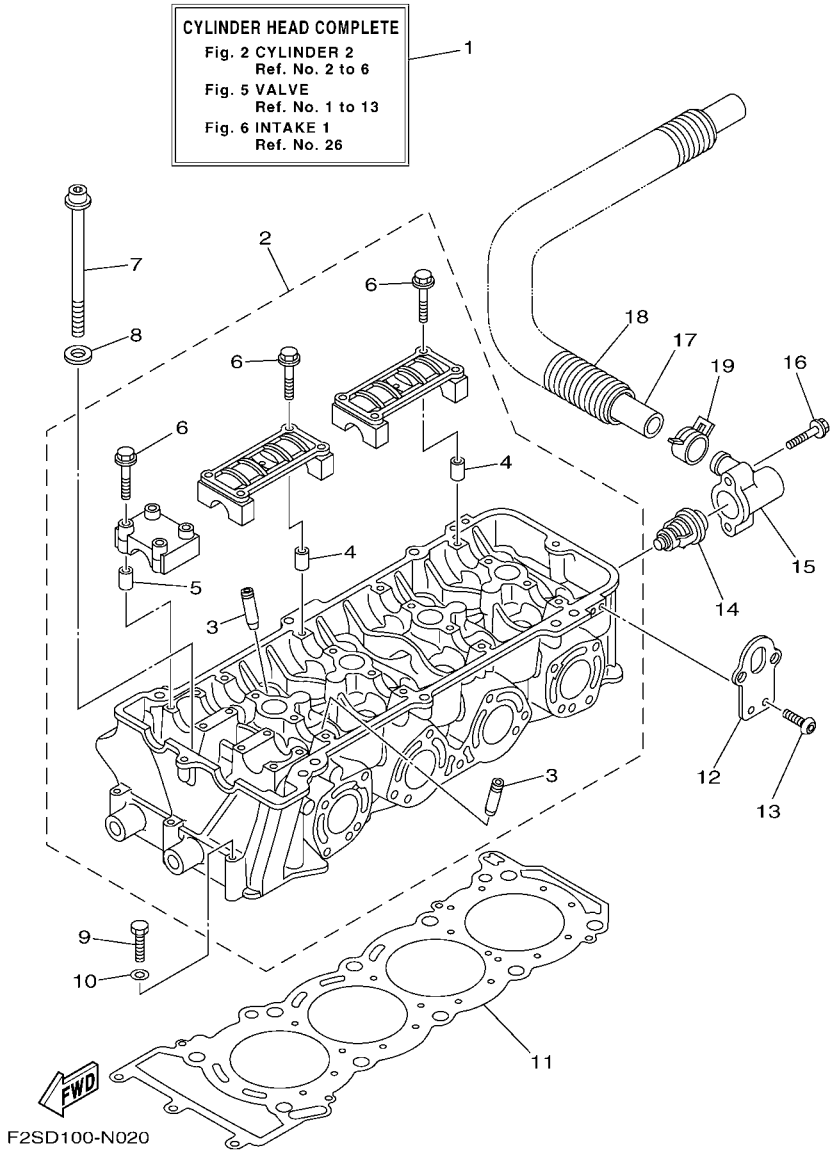

FIG. 2 CYLINDER 2

REF. NO.	PART NO.	DESCRIPTION	CAN	EUR	GENE			REMARKS
1	6S5–W009A–02–94	CYLINDER HEAD COMPLETE	1	1	1			
2	6S5–11102–11	CYLINDER HEAD ASSY	1	1	1			
3	6S5–11133–10	.GUIDE, VALVE 1	16	16	16			
4	91809–16002	.PIN, DOWEL	8	8	8			
5	91809–16002	.PIN, DOWEL	4	4	4			
6	90105–07009	.BOLT, FLANGE	24	24	24			
7	6S5–12228–01	BOLT	10	10	10			
8	90201–12039	WASHER, PLATE	10	10	10			
9	97013–06055	BOLT	3	3	3			
10	92903–06600	WASHER, PLATE	3	3	3			
11	6BH–11181–00	GASKET, CYLINDER HEAD 1	1	1	1			
12	6BH–1111E–00	HANGER, ENGINE 2	2	2	2			
13	92014–06012	BOLT, BUTTON HEAD	4	4	4			
14	60E–12411–01	THERMOSTAT	1	1	1			
15	6BH–12413–00	COVER, THERMOSTAT	1	1	1			
16	90105–06035	BOLT, FLANGE	2	2	2			
17	6S5–12578–00	HOSE 3	1	1	1			
18	90447–28008	TUBE (L850)	1	1	1			
19	90467–240A0	CLIP	1	1	1			

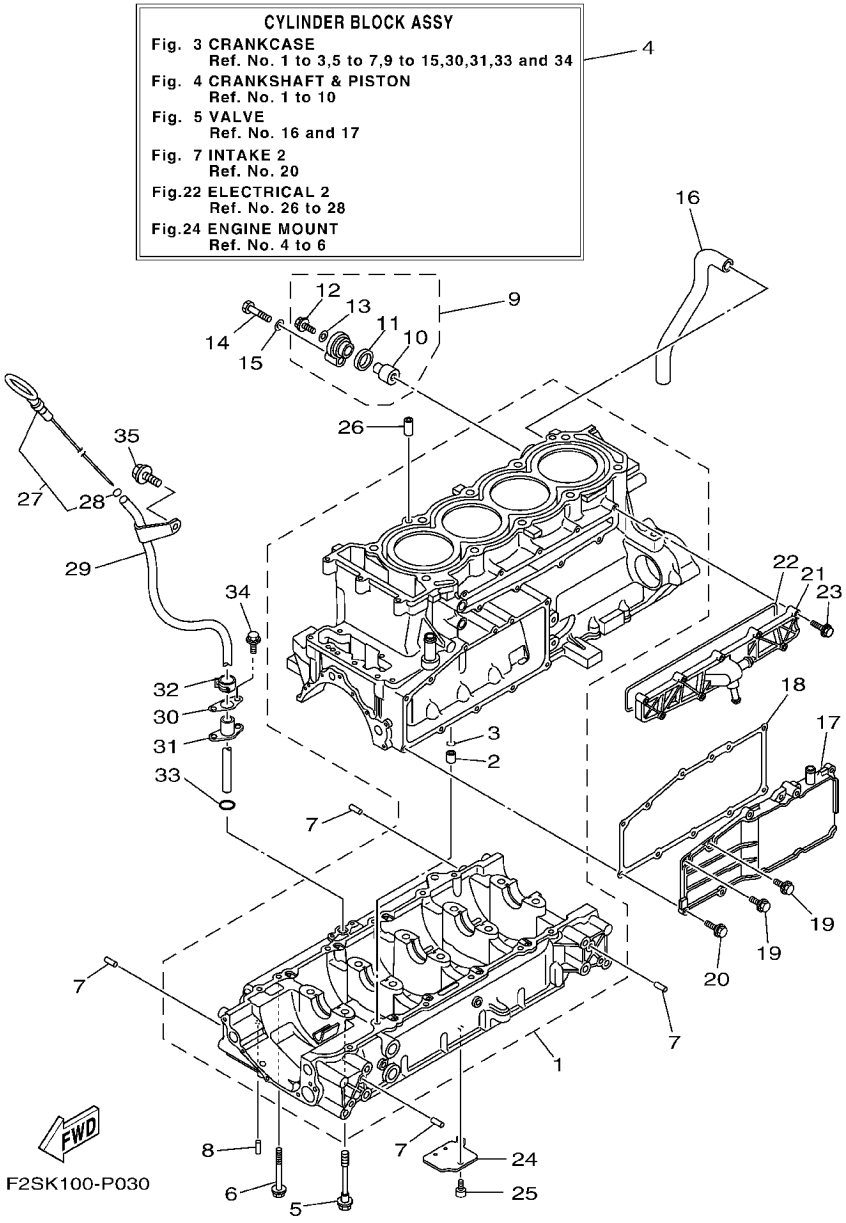

FIG. 3 CRANKCASE

REF. NO.	PART NO.	DESCRIPTION	CAN	EUR	GENE			REMARKS
1	6CS–15100–11	CRANKCASE ASSY	1	1	1			
2	99530–10114	.PIN, DOWEL	1	1	1			
3	93210–11453	.O-RING	1	1	1			
4	6CS–W009B–11–94	CYLINDER BLOCK ASSY	1	1	1			
5	90105–10071	BOLT, FLANGE	10	10	10			
6	95814–06070	BOLT, FLANGE	12	12	12			
7	93606–12019	PIN, DOWEL	8	8	8			
8	93604–10M03	PIN, DOWEL	2	2	2			
9	69J–11301–10	ANODE COVER ASSY	1	1	1			
10	68V–11325–02	.ANODE	1	1	1			
11	67F–11328–00	.GROMMET, ANODE	1	1	1			
12	90105–06M07	.BOLT, FLANGE	1	1	1			
13	90430–06M03	.GASKET	1	1	1			
14	97095–08040	BOLT	1	1	1			
15	92995–08600	WASHER	1	1	1			
16	6S5–11377–00	HOSE	1	1	1			
17	6S5–1131M–10–8P	COVER	1	1	1			
18	6BH–13557–00	GASKET	1	1	1			
19	95024–06014	BOLT, FLG.(SMALL HEAD)	2	2	2			
20	95024–06020	BOLT, FLG.(SMALL HEAD)	9	9	9			
21	6CS–12469–A0	JOINT 1	1	1	1			
22	6CS–12517–00	GASKET, WATER INLET	1	1	1			
23	95814–06035	BOLT, FLANGE	9	9	9			
24	6S5–13337–10	PLATE, BAFFLE LOWER	1	1	1			
25	90110–06182	BOLT, HEXAGON SOCKET HEAD	1	1	1			
26	99530–10114	PIN, DOWEL	2	2	2			
27	6CS–15362–00	PLUG, OIL LEVEL	1	1	1			

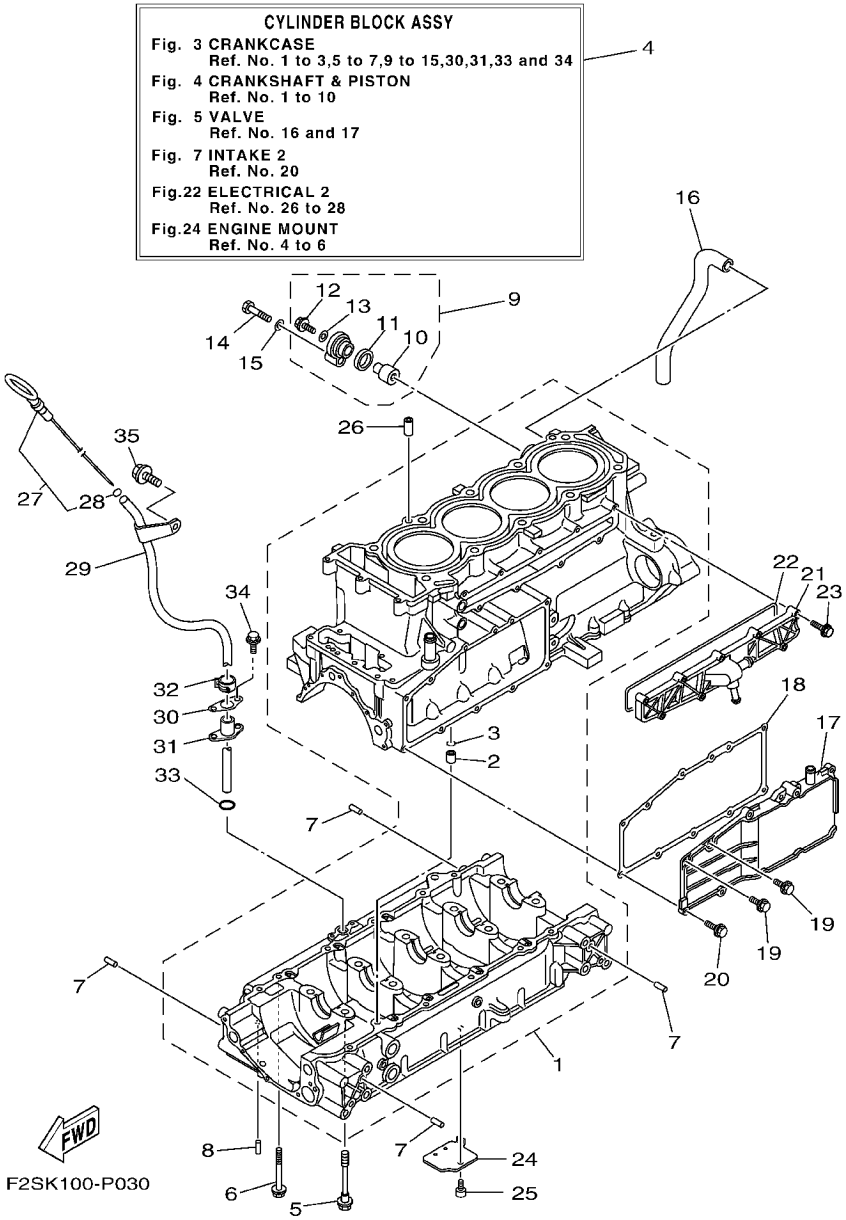

FIG. 3 CRANKCASE

REF. NO.	PART NO.	DESCRIPTION	CAN	EUR	GENE			REMARKS
28	93210–06632	.O-RING	1	1	1			
29	6CS–8572F–00	PIPE, OIL LEVEL	1	1	1			
30	6BH–1319K–00	PLATE	1	1	1			
31	6CS–85516–00	SPACER	1	1	1			
32	90467–150A1	CLIP	1	1	1			
33	93210–12016	O-RING	1	1	1			
34	90109–06268	BOLT	2	2	2			
35	90105–08021	BOLT, FLANGE	1	1	1			

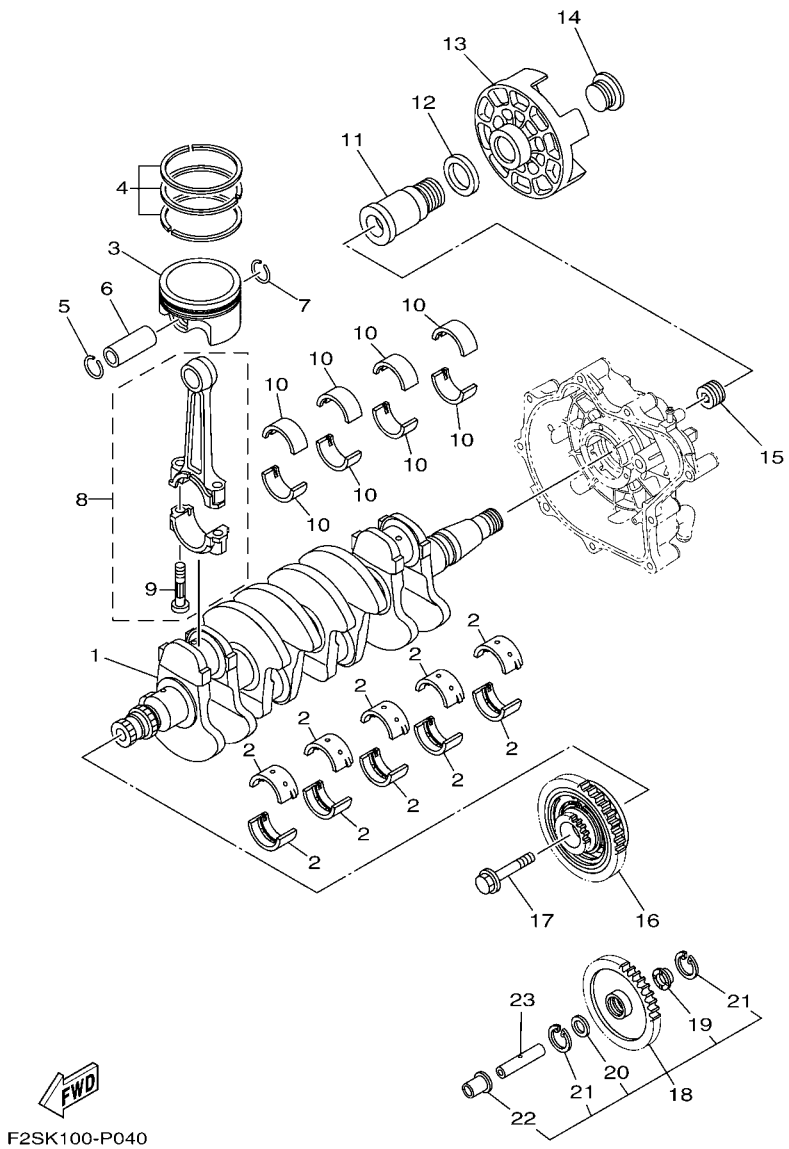

FIG. 4 CRANKSHAFT & PISTON

REF. NO.	PART NO.	DESCRIPTION	CAN	EUR	GENE			REMARKS
1	6S5–11411–00	CRANKSHAFT	1	1	1			
2	6S5–11416–00	PLANE BEARING, CRANKSHAFT 1	10	10	10			UR BROWN
	6S5–11416–10	PLANE BEARING, CRANKSHAFT 1	10	10	10			UR BLACK
	6S5–11416–20	PLANE BEARING, CRANKSHAFT 1	10	10	10			UR BLUE
	6S5–11416–30	PLANE BEARING, CRANKSHAFT 1	10	10	10			UR GREEN
	6S5–11416–40	PLANE BEARING, CRANKSHAFT 1	10	10	10			UR YELLOW
3	6ET–11631–00–B0	PISTON (STD)	4	4	4			
4	6S5–11603–00	PISTON RING SET (STD)	4	4	4			
5	93450–24028	CIRCLIP	4	4	4			
6	6ET–11633–00	PIN, PISTON	4	4	4			
7	93450–24028	CIRCLIP	4	4	4			
8	6S5–11650–10	CONNECTING ROD ASSY	4	4	4			
9	6S5–11654–10	.BOLT, CONNECTING ROD	2	2	2			
10	6S5–11656–40	PLANE BEARING, CONNECTING ROD	8	8	8			UR BLUE
	6S5–11656–50	PLANE BEARING, CONNECTING ROD	8	8	8			UR BLACK
	6S5–11656–60	PLANE BEARING, CONNECTING ROD	8	8	8			UR BROWN
	6S5–11656–70	PLANE BEARING, CONNECTING ROD	8	8	8			UR GREEN
11	6S5–17572–01	SHAFT, TRANSFER	1	1	1			
12	6S5–12289–00	WASHER	1	1	1			
13	6S5–45813–01–94	FLANGE, COUPLING	1	1	1			
14	6S5–17525–01	HOLDER 2	1	1	1			
15	6S5–11459–01	NUT, SPECIAL	1	1	1			
16	6S5–17800–20	GEAR UNIT ASSY (57T)	1	1	1			
17	6S5–17031–01	BOLT	1	1	1			
18	6S5–W1783–20	DRIVE GEAR & COLLAR SET (18T)	1	1	1			
19	6S5–17529–00	.WASHER, THRUST	1	1	1			
20	90201–132G5	.WASHER, PLATE	1	1	1			

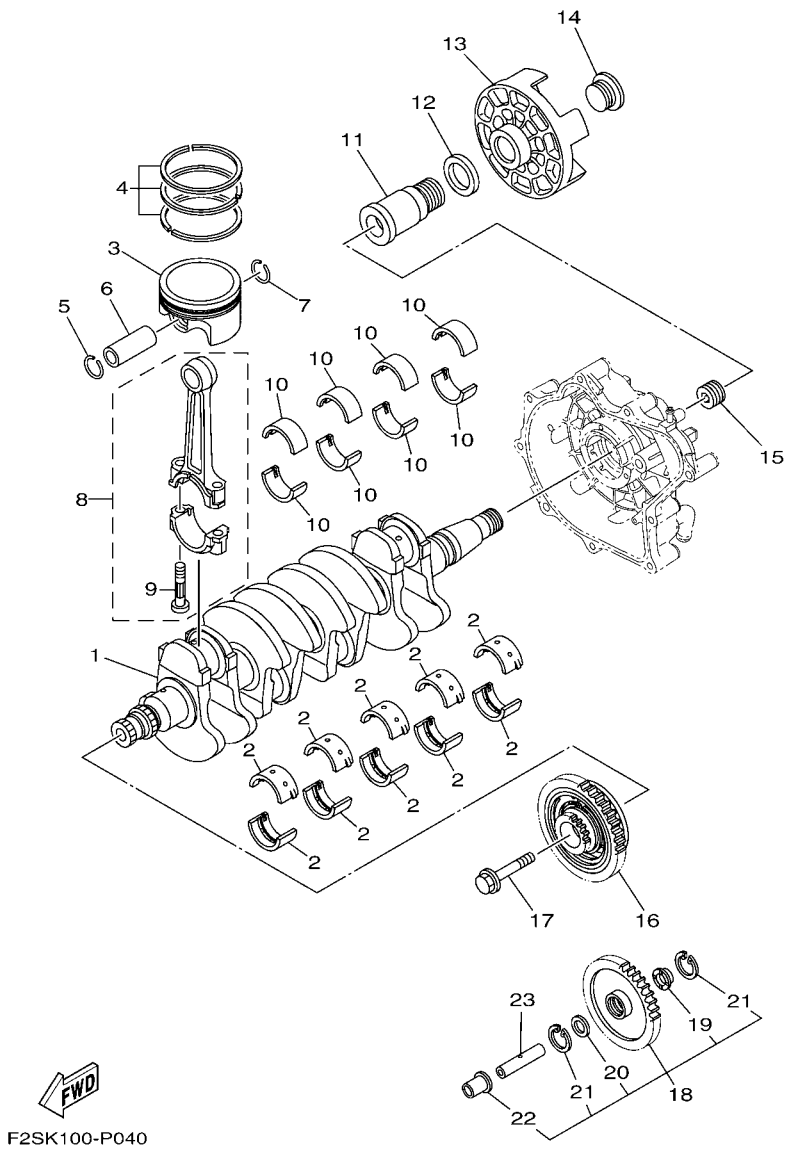

FIG. 4 CRANKSHAFT & PISTON

REF. NO.	PART NO.	DESCRIPTION	CAN	EUR	GENE			REMARKS
21	99009–24700	.CIRCLIP	2	2	2			
22	6S5–17585–10	.COLLAR, GEAR	1	1	1			
23	6S5–17553–00	SHAFT, MIDDLE DRIVEN	1	1	1			

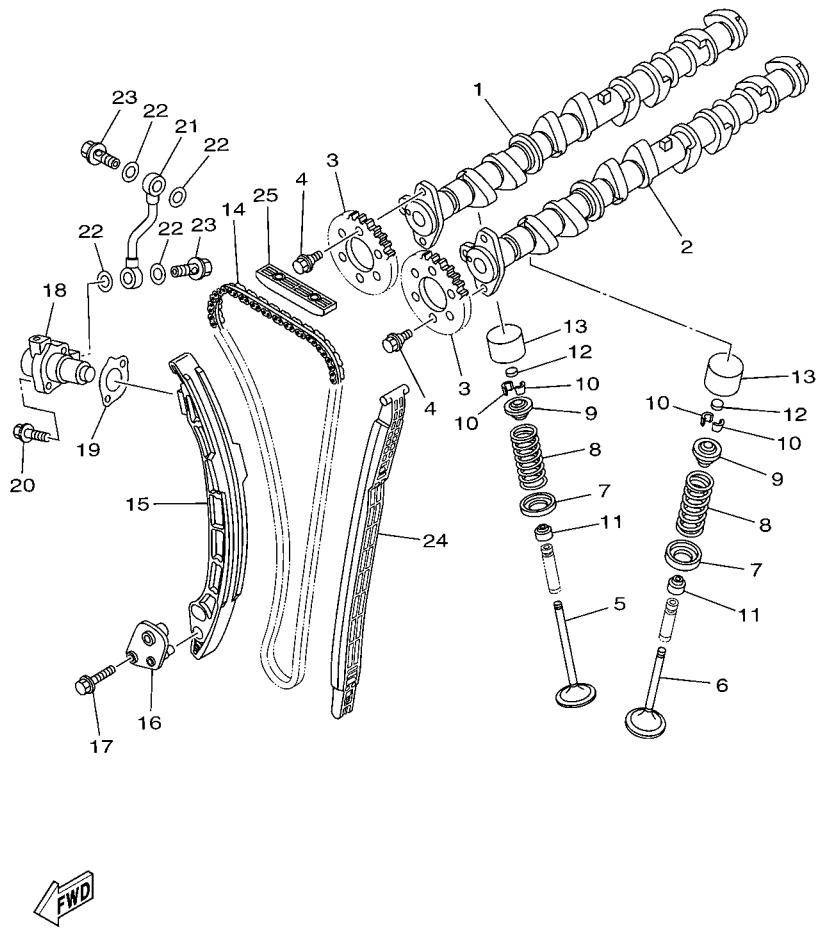

F2CD100-L050

FIG. 5 VALVE

REF. NO.	PART NO.	DESCRIPTION	CAN	EUR	GENE			REMARKS
1	6S5–12171–10	CAMSHAFT 1	1	1	1			
2	6S5–12181–10	CAMSHAFT 2	1	1	1			
3	6D3–12176–10	SPROCKET, CAM CHAIN	2	2	2			
4	90105–07004	BOLT, FLANGE	4	4	4			
5	6S5–12111–00	VALVE, INTAKE	8	8	8			
6	6S5–12121–00	VALVE, EXHAUST	8	8	8			
7	6S5–12116–00	SEAT, VALVE SPRING	16	16	16			
8	6S5–12113–00	SPRING, VALVE INNER	16	16	16			
9	6S5–12117–00	RETAINER, VALVE SPRING	16	16	16			
10	3LD–12118–00	LOCK, VALVE SPRING RETAINER	32	32	32			
11	51Y–12119–00	SEAL, VALVE STEM	16	16	16			
12	3LD–12168–00	PAD, ADJUSTING (1.20)	16	16	16			UR
	3LD–12168–20	PAD, ADJUSTING (1.25)	16	16	16			UR
	3LD–12168–40	PAD, ADJUSTING (1.30)	16	16	16			UR
	3LD–12168–60	PAD, ADJUSTING (1.35)	16	16	16			UR
	3LD–12168–80	PAD, ADJUSTING (1.40)	16	16	16			UR
	3LD–12168–A0	PAD, ADJUSTING (1.45)	16	16	16			UR
	3LD–12168–F0	PAD, ADJUSTING (1.50)	16	16	16			UR
	3LD–12168–H1	PAD, ADJUSTING (1.55)	16	16	16			UR
	3LD–12168–K1	PAD, ADJUSTING (1.60)	16	16	16			UR
	3LD–12168–M1	PAD, ADJUSTING (1.65)	16	16	16			UR
	3LD–12168–R1	PAD, ADJUSTING (1.70)	16	16	16			UR
	3LD–12168–U1	PAD, ADJUSTING (1.75)	16	16	16			UR
	3LD–12168–W1	PAD, ADJUSTING (1.80)	16	16	16			UR
	3LD–12168–Y1	PAD, ADJUSTING (1.85)	16	16	16			UR
	3LD–12169–11	PAD, ADJUSTING (1.90)	16	16	16			UR
	3LD–12169–31	PAD, ADJUSTING (1.95)	16	16	16			UR

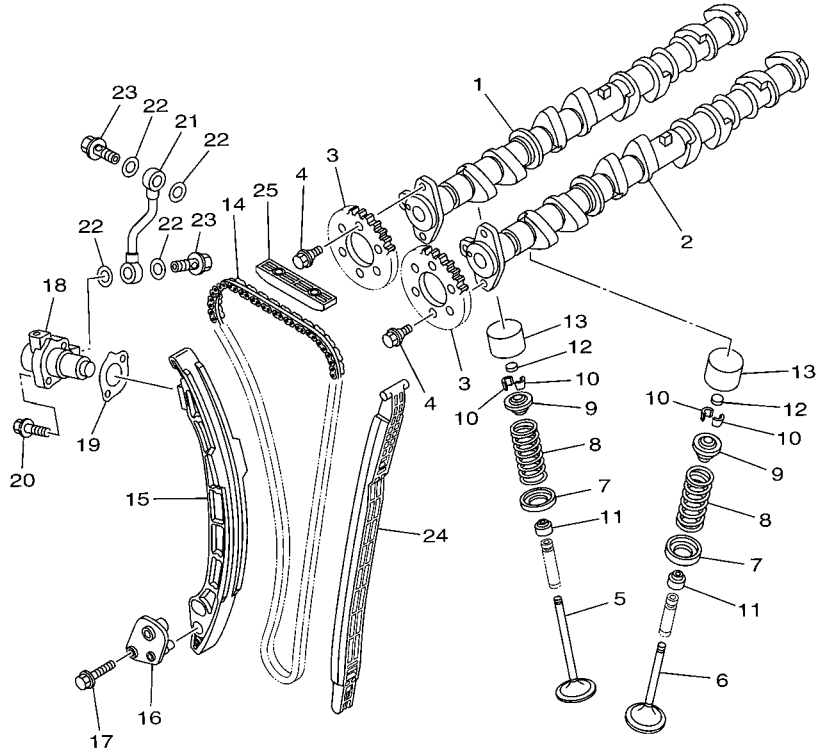

F2CD100-L050

FIG. 5 VALVE

REF. NO.	PART NO.	DESCRIPTION	CAN	EUR	GENE			REMARKS
12	3LD–12169–50	PAD, ADJUSTING (2.00)	16	16	16			UR
	3LD–12169–70	PAD, ADJUSTING (2.05)	16	16	16			UR
	3LD–12169–90	PAD, ADJUSTING (2.10)	16	16	16			UR
	3LD–12169–E0	PAD, ADJUSTING (2.15)	16	16	16			UR
	3LD–12169–G0	PAD, ADJUSTING (2.20)	16	16	16			UR
	3LD–12169–J0	PAD, ADJUSTING (2.25)	16	16	16			UR
	3LD–12169–L0	PAD, ADJUSTING (2.30)	16	16	16			UR
13	6S5–12153–00	LIFTER, VALVE	16	16	16			
14	94591–66152	CHAIN	1	1	1			
15	6BH–12252–00	DAMPER, CHAIN 2	1	1	1			
16	6BH–12279–00	PLATE	1	1	1			
17	95814–06030	BOLT, FLANGE	2	2	2			
18	6S5–12210–00	TENSIONER ASSY, CAM CHAIN	1	1	1			
19	6S5–121E2–00	GASKET	1	1	1			
20	91380–06025	BOLT	2	2	2			
21	6S5–13418–00	PIPE, OIL 2	1	1	1			
22	90430–10007	GASKET	4	4	4			
23	90401–10040	BOLT, UNION	2	2	2			
24	6BH–12251–00	DAMPER, CHAIN 1	1	1	1			
25	6BH–12241–00	GUIDE, STOPPER 2	1	1	1			

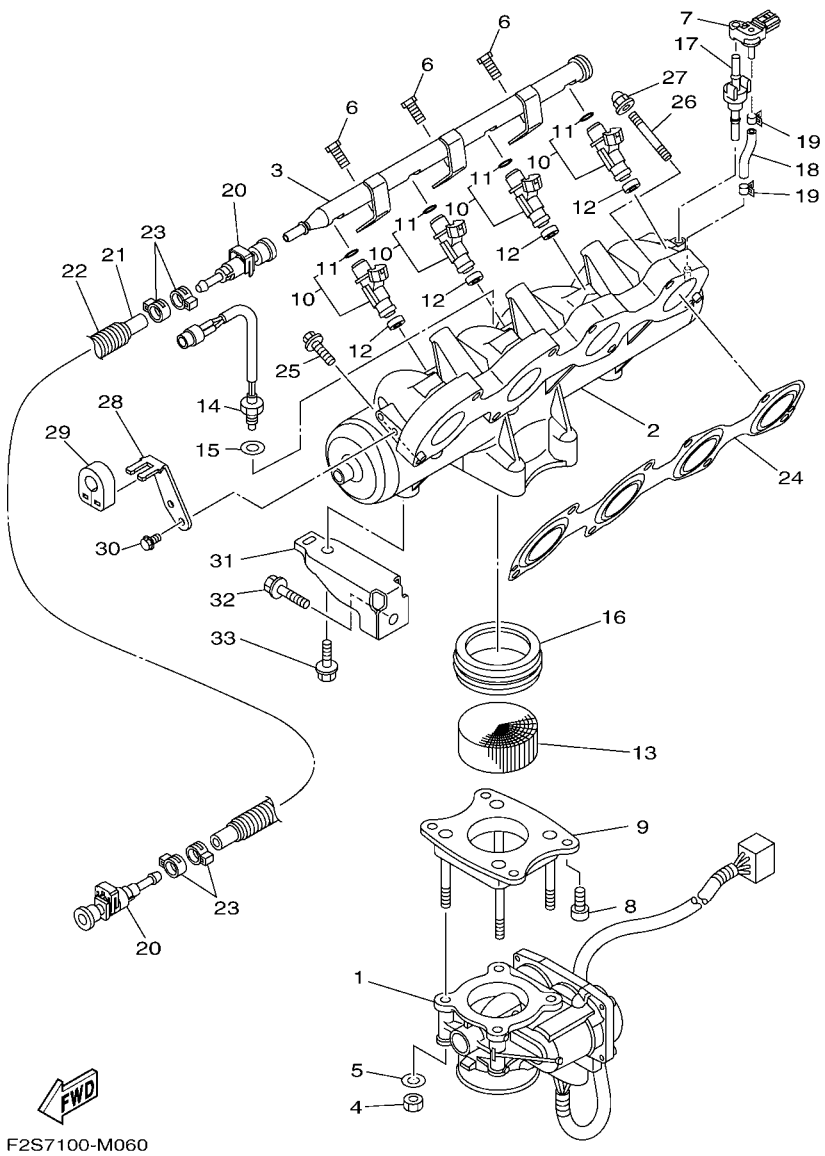

FIG. 6 INTAKE 1

REF. NO.	PART NO.	DESCRIPTION	CAN	EUR	GENE			REMARKS
1	6S5–13750–10	THROTTLE BODY ASSY	1	1	1			
2	6S5–13641–A2	MANIFOLD, INTAKE 1	1	1	1			
3	6CS–12880–00	DELIVERY PIPE	1	1	1			
4	6P2–13588–00	NUT	4	4	4			
5	6P2–13578–00	WASHER	4	4	4			
6	6CS–14446–00	BOLT	3	3	3			
7	6BH–82380–00	SENSOR, PRESSURE	1	1	1			
8	6S5–14496–00	BOLT	4	4	4			
9	6S5–14360–11	THROTTLE DAMPER ASSY	1	1	1			
10	6S5–13761–10	INJECTOR	4	4	4			
11	68V–1416A–00	.O-RING	1	1	1			
12	8FP–13556–10	GASKET, MANIFOLD	4	4	4			
13	6D3–1444B–00	RIBBON	1	1	1			
14	6S5–85886–00	SENSOR, AIR TEMPERATURE	1	1	1			
15	6S5–14285–00	WASHER	1	1	1			
16	6S5–14457–00	HOLDER	1	1	1			
17	6BH–14445–00	GROMMET	1	1	1			
18	6S5–13532–00	HOSE, VACUUM SENSING 3	1	1	1			
19	6S5–14159–00	CLIP	2	2	2			
20	6S5–24300–01	FUEL PIPE JOINT	2	2	2			
21	6AN–14294–10	HOSE	1	1	1			
22	90447–19017	TUBE (L495)	1	1	1			
23	90450–17M17	HOSE CLAMP ASSY	4	4	4			
24	6BH–13645–00	GASKET, MANIFOLD 1	1	1	1			
25	97513–08535	BOLT, WITH WASHER	6	6	6			
26	90116–08032	BOLT, STUD	2	2	2			
27	90176–08080	NUT, CROWN	2	2	2			

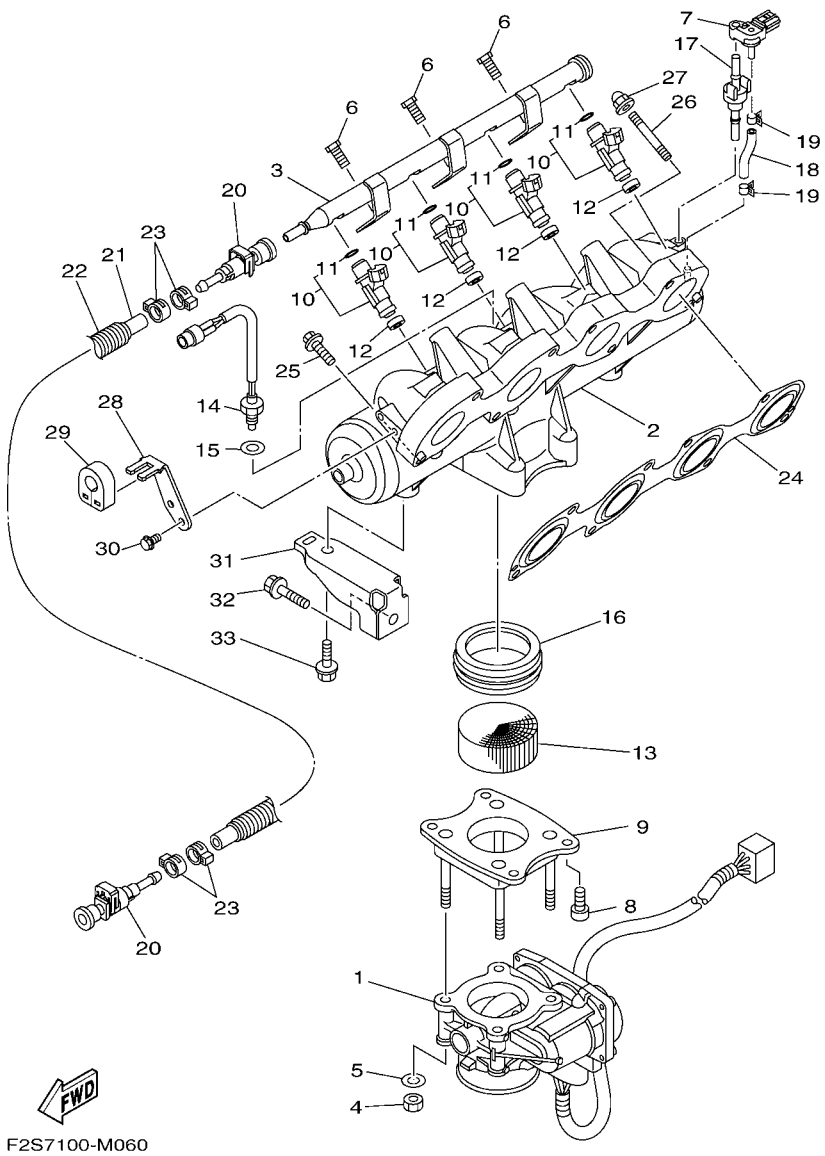

FIG. 6 INTAKE 1

REF. NO.	PART NO.	DESCRIPTION	CAN	EUR	GENE			REMARKS
28	6CS–14572–00	PLATE, STAY	1	1	1			
29	6CS–14445–00	GROMMET	1	1	1			
30	95023–06012	BOLT	2	2	2			
31	6CS–14413–00	STAY	2	2	2			
32	90119–08099	BOLT, WITH WASHER	2	2	2			
33	90119–08074	BOLT, WITH WASHER	2	2	2			

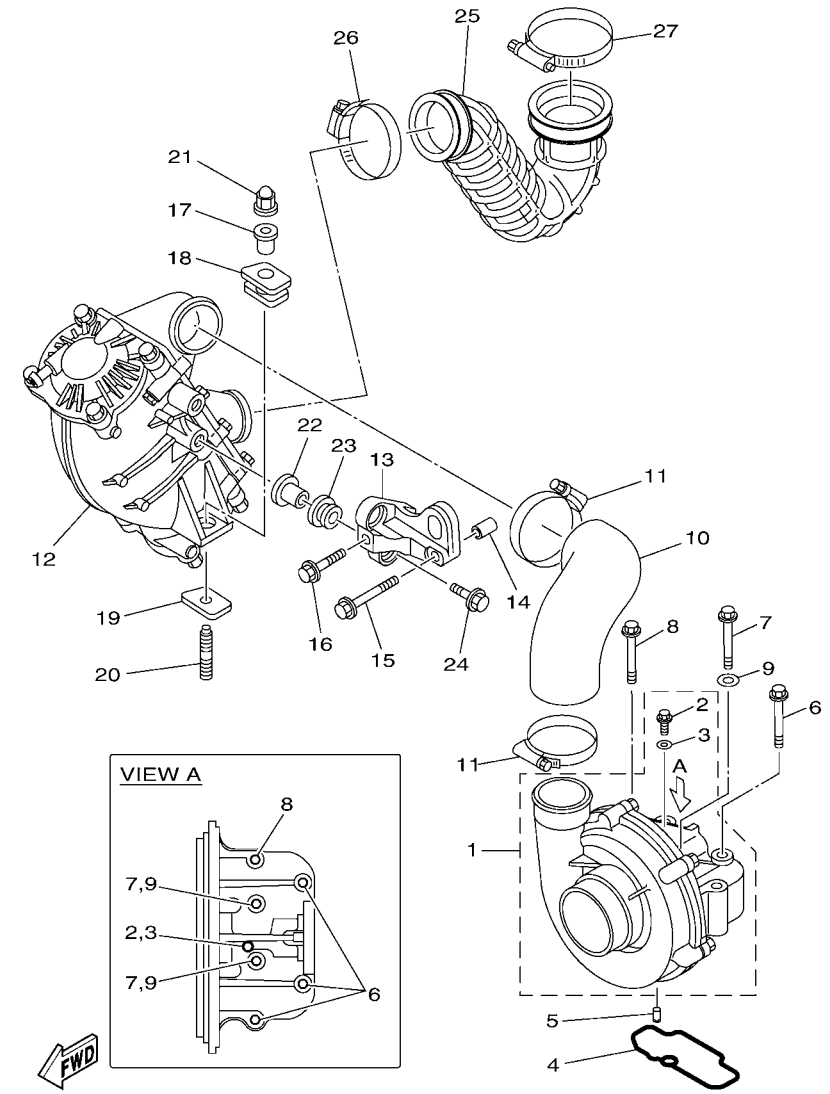

F2S7100-M070

FIG. 7 INTAKE 2

REF. NO.	PART NO.	DESCRIPTION	CAN	EUR	GENE			REMARKS
1	6S5–141A0–05	SUPER CHARGER ASSY	1	1	1			
2	90105–05020	.BOLT, FLANGE	1	1	1			
3	6S5–14199–00	.GASKET	1	1	1			
4	6S5–1416A–00	O-RING	1	1	1			
5	93604–10M03	PIN, DOWEL	2	2	2			
6	95814–08065	BOLT, FLANGE	3	3	3			
7	95814–06065	BOLT, FLANGE	2	2	2			
8	90105–08188	BOLT, FLANGE	1	1	1			
9	90201–06028	WASHER, PLATE	2	2	2			
10	6S5–14349–00	PIPE	1	1	1			
11	90450–75003	HOSE CLAMP ASSY	2	2	2			
12	6S5–13670–10	AIR COOLER ASSY.	1	1	1			
13	6S5–13691–12	BRACKET, AIR COOLER	1	1	1			
14	99590–14016	PIN, DOWEL	2	2	2			
15	90119–10047	BOLT, WITH WASHER	1	1	1			
16	90119–10046	BOLT, WITH WASHER	1	1	1			
17	90387–11007	COLLAR	1	1	1			
18	6S5–14435–00	GROMMET	1	1	1			
19	6S5–14243–01	PLATE	1	1	1			
20	90116–10044	BOLT, STUD	1	1	1			
21	90176–10001	NUT, CROWN	1	1	1			
22	90387–11008	COLLAR	2	2	2			
23	90480–21M63	GROMMET	2	2	2			
24	90119–10011	BOLT, WITH WASHER	2	2	2			
25	6CS–13651–00	PIPE, BOOST	1	1	1			
26	90450–70006	HOSE CLAMP ASSY	1	1	1			
27	90450–90002	HOSE CLAMP ASSY	1	1	1			

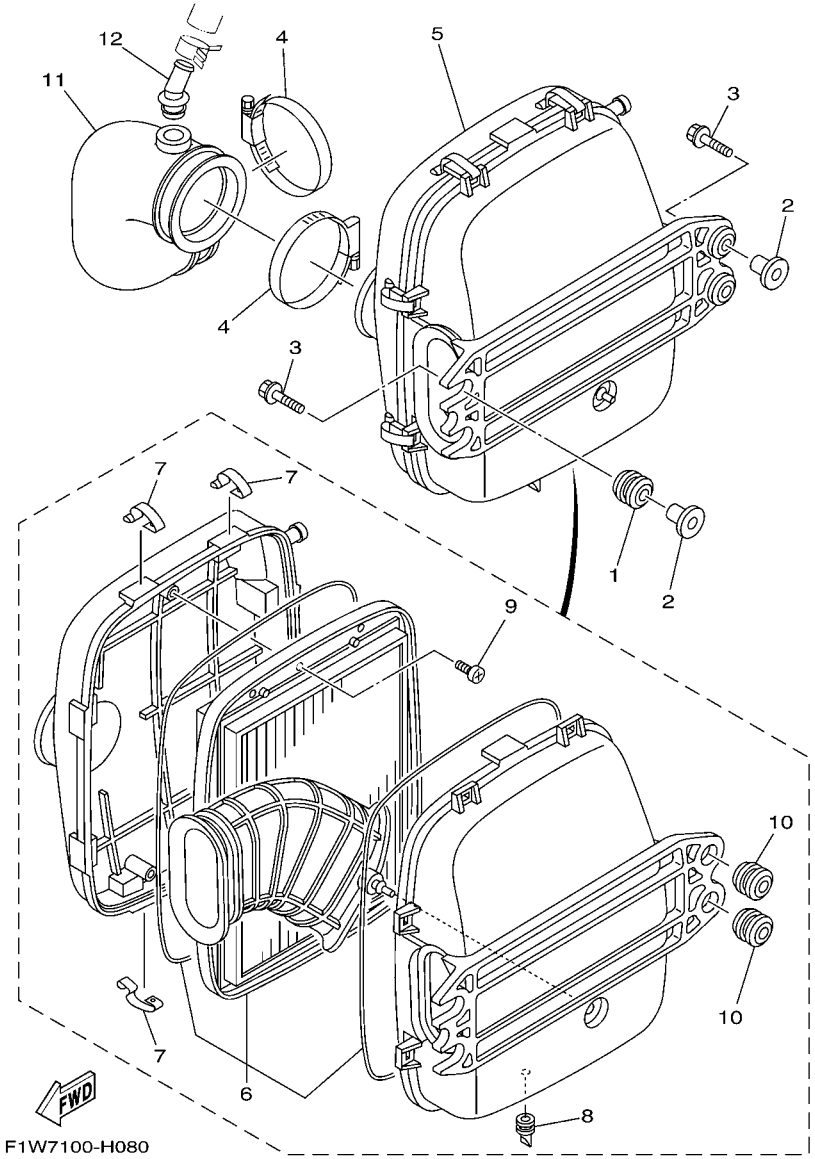

FIG. 8 INTAKE 3

REF. NO.	PART NO.	DESCRIPTION	CAN	EUR	GENE			REMARKS
1	90480–22M15	GROMMET	2	2	2			
2	90387–08M37	COLLAR	4	4	4			
3	90119–08M22	BOLT, WITH WASHER	4	4	4			
4	90450–90002	HOSE CLAMP ASSY	2	2	2			
5	6S5–E4410–01	AIR CLEANER ASSY.	1	1	1			
6	6S5–E4451–00	.ELEMENT, AIR CLEANER	1	1	1			
7	6S5–E4436–00	.HOOK	8	8	8			
8	6S5–G2717–00	.RUBBER, SEAL 2	1	1	1			
9	97780–60516	.SCREW, TAPPING	3	3	3			
10	90480–22801	.GROMMET	2	2	2			
11	6S5–E4419–00	PIPE	1	1	1			
12	6S5–R1142–10	CONNECTION	1	1	1			

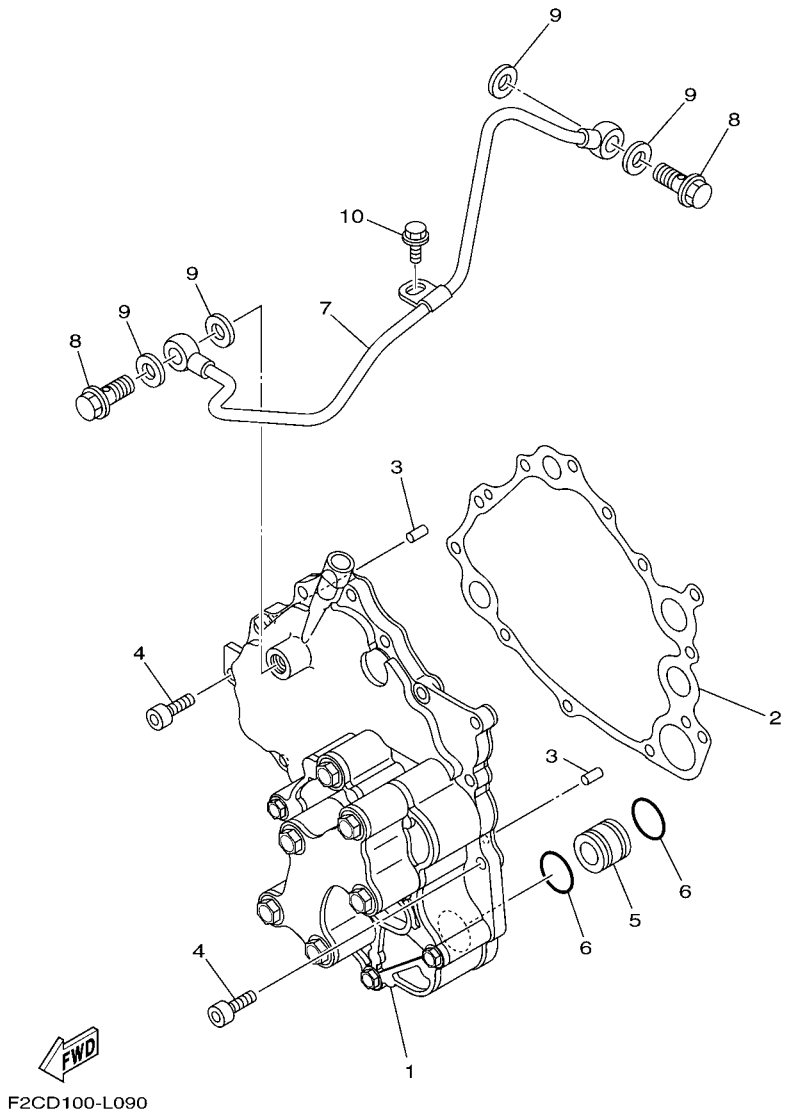

FIG. 9 OIL PUMP

REF. NO.	PART NO.	DESCRIPTION	CAN	EUR	GENE			REMARKS
1	6S5–13300–22	OIL PUMP ASSY	1	1	1			
2	6S5–13563–00	GASKET	1	1	1			
3	93606–12019	PIN, DOWEL	2	2	2			
4	91314–06020	BOLT, HEXAGON SOCKET HEAD	12	12	12			
5	6S5–13446–10	CONNECTOR	1	1	1			
6	93210–21631	O-RING	2	2	2			
7	6S5–13416–00	PIPE, OIL 1	1	1	1			
8	90401–10040	BOLT, UNION	2	2	2			
9	90430–10007	GASKET	4	4	4			
10	95023–06012	BOLT	1	1	1			

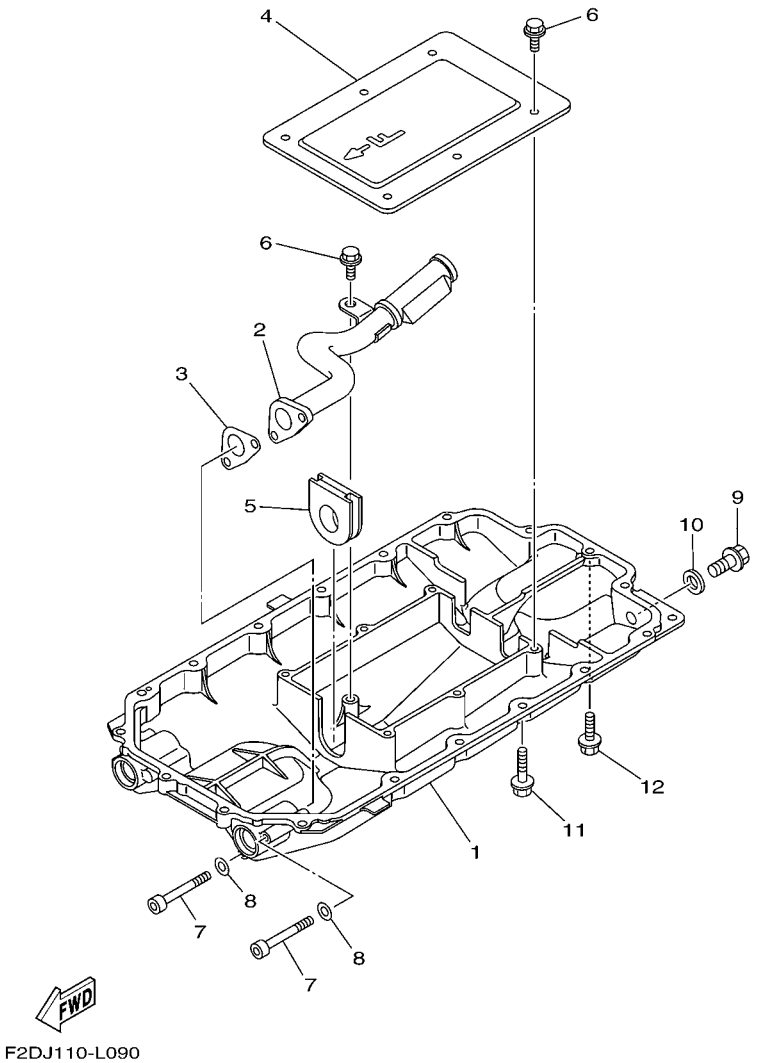

FIG. 10 OIL PAN

REF. NO.	PART NO.	DESCRIPTION	CAN	EUR	GENE			REMARKS
1	6S5–1310A–23	PAN, OIL	1	1	1			
2	6S5–13405–11	OIL PIPE COMP. 1	1	1	1			
3	6S5–13477–00	GASKET	1	1	1			
4	6S5–13317–10	PLATE, BAFFLE	1	1	1			
5	6S5–15486–10	GROMMET	1	1	1			
6	95817–06014	BOLT, FLANGE	7	7	7			
7	91314–06060	BOLT, HEXAGON SOCKET HEAD	2	2	2			
8	90201–06028	WASHER, PLATE	2	2	2			
9	95814–08020	BOLT, FLANGE	1	1	1			
10	90430–08209	GASKET	1	1	1			
11	95024–06035	BOLT, FLG.(SMALL HEAD)	17	17	17			
12	95024–06020	BOLT, FLG.(SMALL HEAD)	1	1	1			

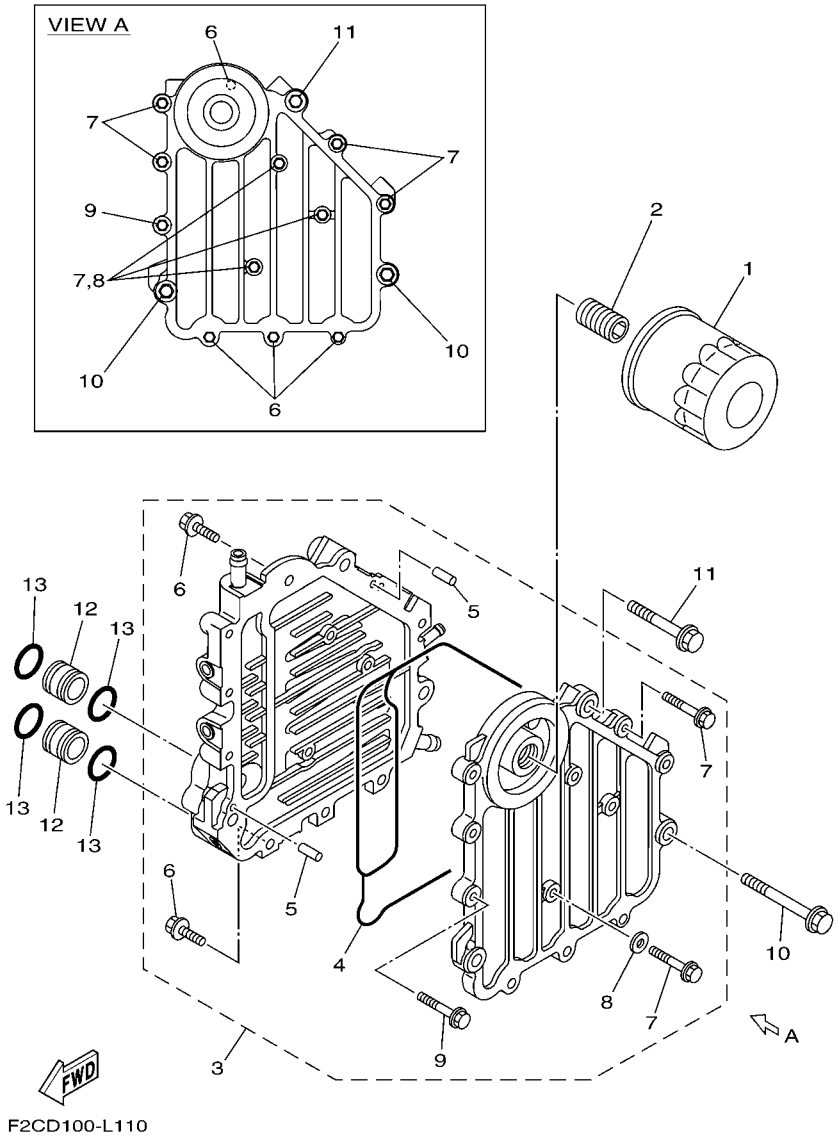

FIG. 11 OIL COOLER

REF. NO.	PART NO.	DESCRIPTION	CAN	EUR	GENE			REMARKS
1	69J–13440–03	ELEMENT ASSY, OIL CLEANER	1	1	1			
2	6S5–12858–00	BOLT, UNION	1	1	1			
3	6S5–13470–31	OIL COOLER ASSY	1	1	1			
4	6BH–13556–00	.GASKET, MANIFOLD	1	1	1			
5	93604–10M03	.PIN, DOWEL	2	2	2			
6	90105–06184	.BOLT, FLANGE	4	4	4			
7	90105–06185	.BOLT, FLANGE	7	7	7			
8	90430–06232	.GASKET	3	3	3			
9	90105–08054	.BOLT, FLANGE	1	1	1			
10	90105–08169	BOLT, FLANGE	2	2	2			
11	90105–08170	BOLT, FLANGE	1	1	1			
12	60E–13446–00	CONNECTOR	2	2	2			
13	93210–18322	O-RING	4	4	4			

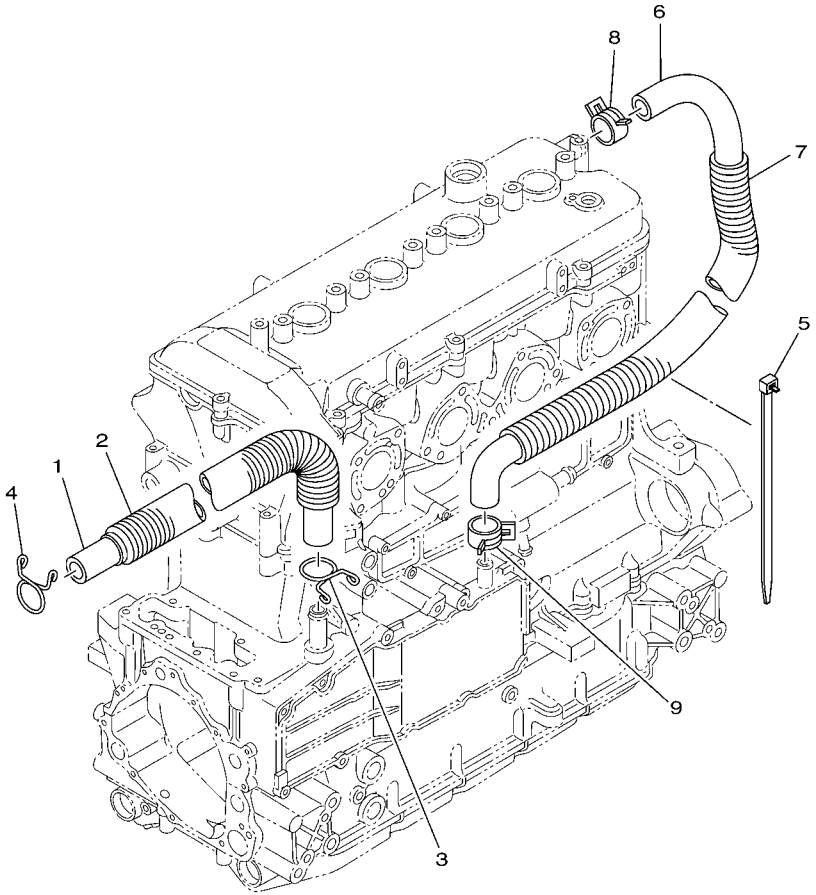

F2CD100-L120

FIG. 12 BREATHER OIL

REF. NO.	PART NO.	DESCRIPTION	CAN	EUR	GENE			REMARKS
1	6S5–11166–10	PIPE, BREATHER 1	1	1	1			
2	90447–22015	TUBE (L410)	1	1	1			
3	90467–190A0	CLIP	1	1	1			
4	90467–190A0	CLIP	1	1	1			
5	90465–14M66	CLAMP	1	1	1			
6	6S5–11167–10	PIPE, BREATHER 2	1	1	1			
7	90447–22016	TUBE (L490)	1	1	1			
8	90467–240A0	CLIP	1	1	1			
9	90467–200A3	CLIP	1	1	1			

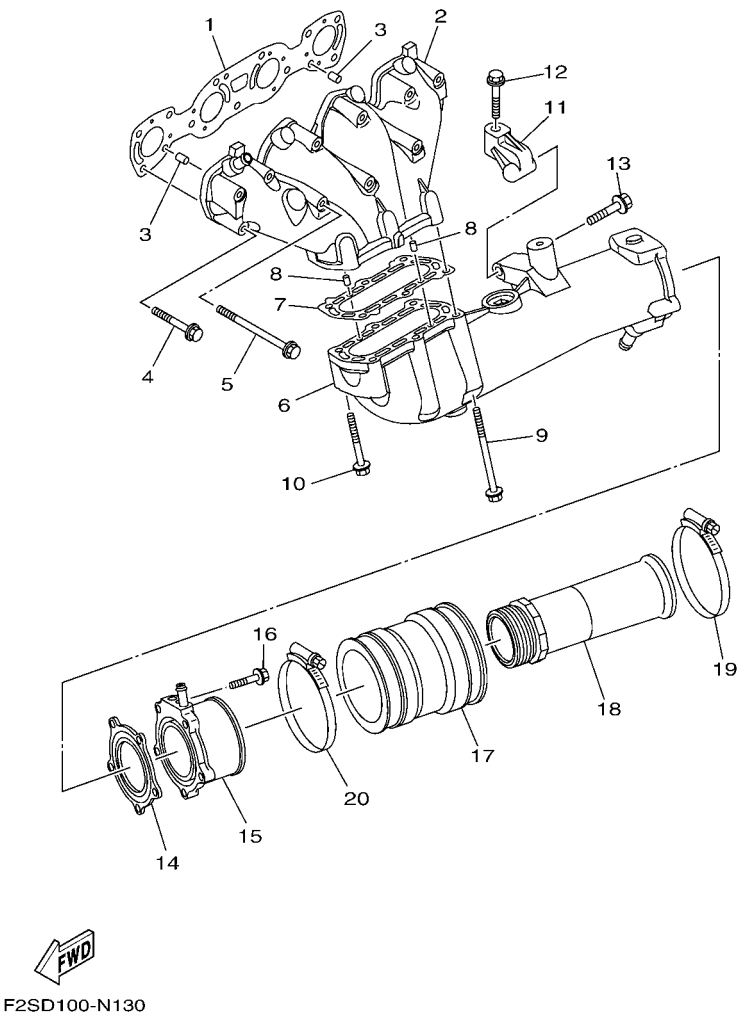

FIG. 13 EXHAUST 1

REF. NO.	PART NO.	DESCRIPTION	CAN	EUR	GENE			REMARKS
1	6S5–14613–00	GASKET, EXHAUST PIPE	1	1	1			
2	6S5–14711–10	MUFFLER 1	1	1	1			
3	93608–16M16	PIN, DOWEL	2	2	2			
4	90119–08034	BOLT, WITH WASHER	8	8	8			
5	90119–08097	BOLT, WITH WASHER	3	3	3			
6	6BH–14721–10	MUFFLER 2	1	1	1			
7	6S5–14739–00	GASKET, MUFFLER DAMPER 1	1	1	1			
8	93606–12019	PIN, DOWEL	2	2	2			
9	90119–08097	BOLT, WITH WASHER	4	4	4			
10	90119–08034	BOLT, WITH WASHER	2	2	2			
11	6S5–14771–00–94	STAY, MUFFLER 1	1	1	1			
12	90119–08096	BOLT, WITH WASHER	1	1	1			
13	90119–10029	BOLT, WITH WASHER	1	1	1			
14	6BH–14749–00	GASKET, MUFFLER DAMPER 2	1	1	1			
15	6BH–14784–01–94	PIPE, TAIL	1	1	1			
16	95024–08035	BOLT, FLG.(SMALL HEAD)	5	5	5			
17	6S5–E4752–00	PIPE, OUTLET	1	1	1			
18	6CS–1475A–00	PIPE 1	1	1	1			
19	90450–99016	HOSE CLAMP ASSY	1	1	1			
20	90450–99015	HOSE CLAMP ASSY	1	1	1			

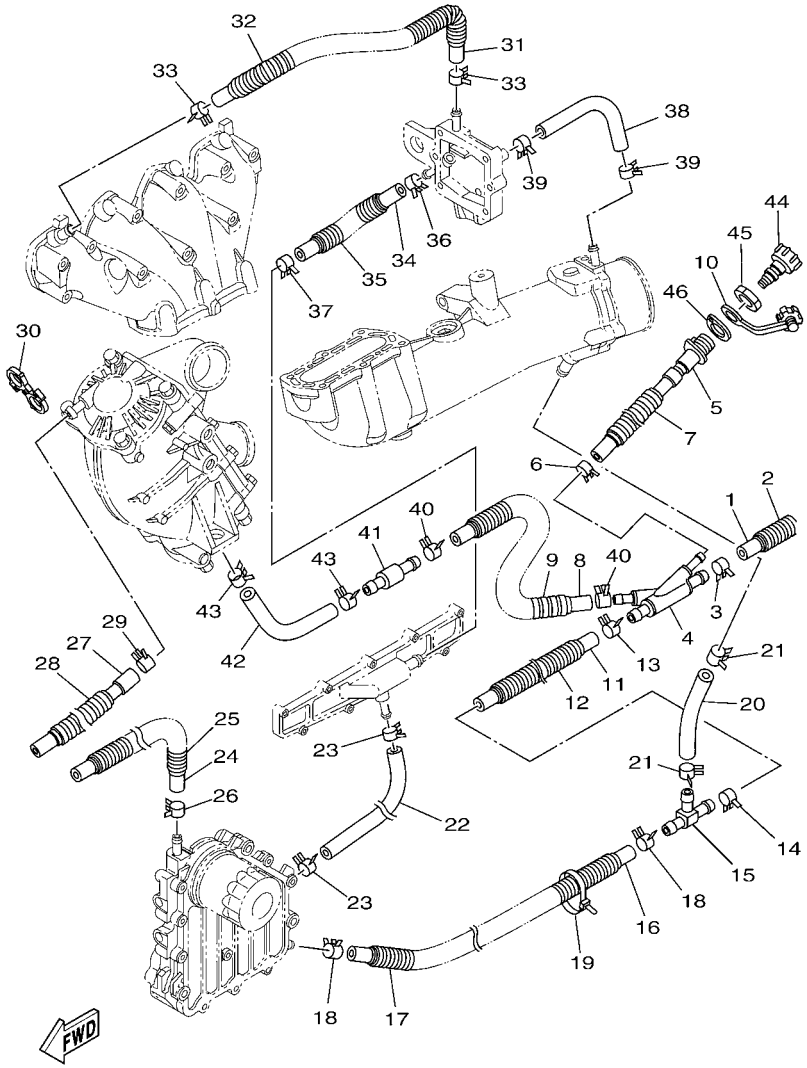

F2SD100-N140

FIG. 14 EXHAUST 2

REF. NO.	PART NO.	DESCRIPTION	CAN	EUR	GENE			REMARKS
1	90445–21806	HOSE (L250)	1	1	1			
2	90447–22801	TUBE (L200)	1	1	1			
3	90467–200A3	CLIP	1	1	1			
4	6CS–12581–00	JOINT, HOSE 1	1	1	1			
5	6CS–12580–00	JOINT ASSY	1	1	1			
6	90467–150A5	CLIP	1	1	1			
7	90447–19801	TUBE (L485)	1	1	1			
8	90445–21807	HOSE (L970)	1	1	1			
9	90447–22802	TUBE (L850)	1	1	1			
10	682–84385–01	CAP,1	1	1	1			
11	6S5–1243E–01	HOSE 2	1	1	1			
12	90447–22011	TUBE (L170)	1	1	1			
13	90467–200A3	CLIP	1	1	1			
14	90467–200A3	CLIP	1	1	1			
15	6BH–12584–00	JOINT, HOSE 3	1	1	1			
16	90445–18012	HOSE (L400)	1	1	1			
17	90447–19005	TUBE (L260)	1	1	1			
18	90467–160A0	CLIP	2	2	2			
19	90464–35132	CLAMP	1	1	1			
20	6S5–12589–01	HOSE 6	1	1	1			
21	90467–200A3	CLIP	2	2	2			
22	6BH–1244H–00	HOSE 5	1	1	1			
23	90467–150A1	CLIP	2	2	2			
24	6CS–12588–00	HOSE 5	1	1	1			
25	90447–19018	TUBE (L760)	1	1	1			
26	90467–160A0	CLIP	1	1	1			
27	6CS–12552–00	HOSE 8	1	1	1			

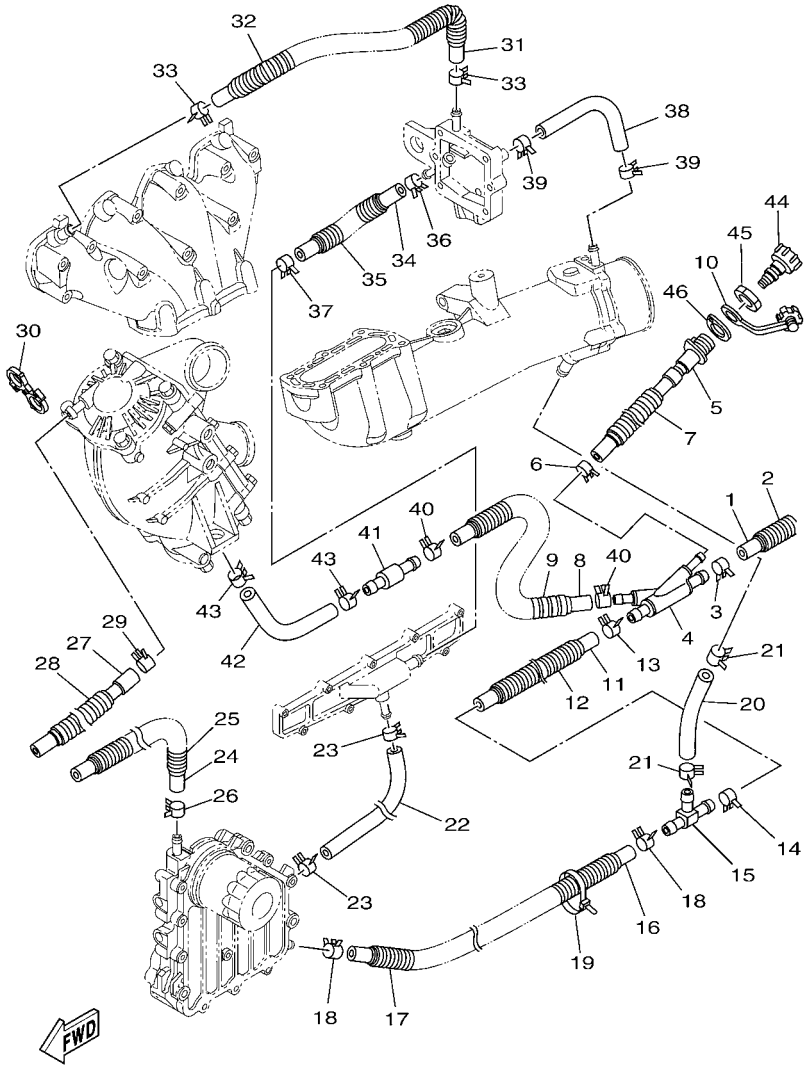

F2SD100-N140

FIG. 14 EXHAUST 2

REF. NO.	PART NO.	DESCRIPTION	CAN	EUR	GENE			REMARKS
28	90447–19016	TUBE (L480)	1	1	1			
29	90467–170A4	CLIP	1	1	1			
30	90464–24003	CLAMP	1	1	1			
31	6S5–12577–00	HOSE 2	1	1	1			
32	90446–27M55	TUBE (L400)	1	1	1			
33	90467–160A0	CLIP	2	2	2			
34	6S5–12579–00	HOSE 4	1	1	1			
35	90447–19011	TUBE (L150)	1	1	1			
36	90467–160A0	CLIP	1	1	1			
37	90467–170A5	CLIP	1	1	1			
38	90445–16013	HOSE (L220)	1	1	1			
39	90467–160A0	CLIP	2	2	2			
40	90467–200A3	CLIP	2	2	2			
41	6S5–12594–00	JOINT, HOSE 4	1	1	1			
42	6S5–12576–01	HOSE 1	1	1	1			
43	90467–200A3	CLIP	2	2	2			
44	67X–E2590–10	CONDUCTION ASSY	1	1	1			
45	EU0–61652–00	NUT	1	1	1			
46	F2S–U7525–00	PACKING	1	1	1			

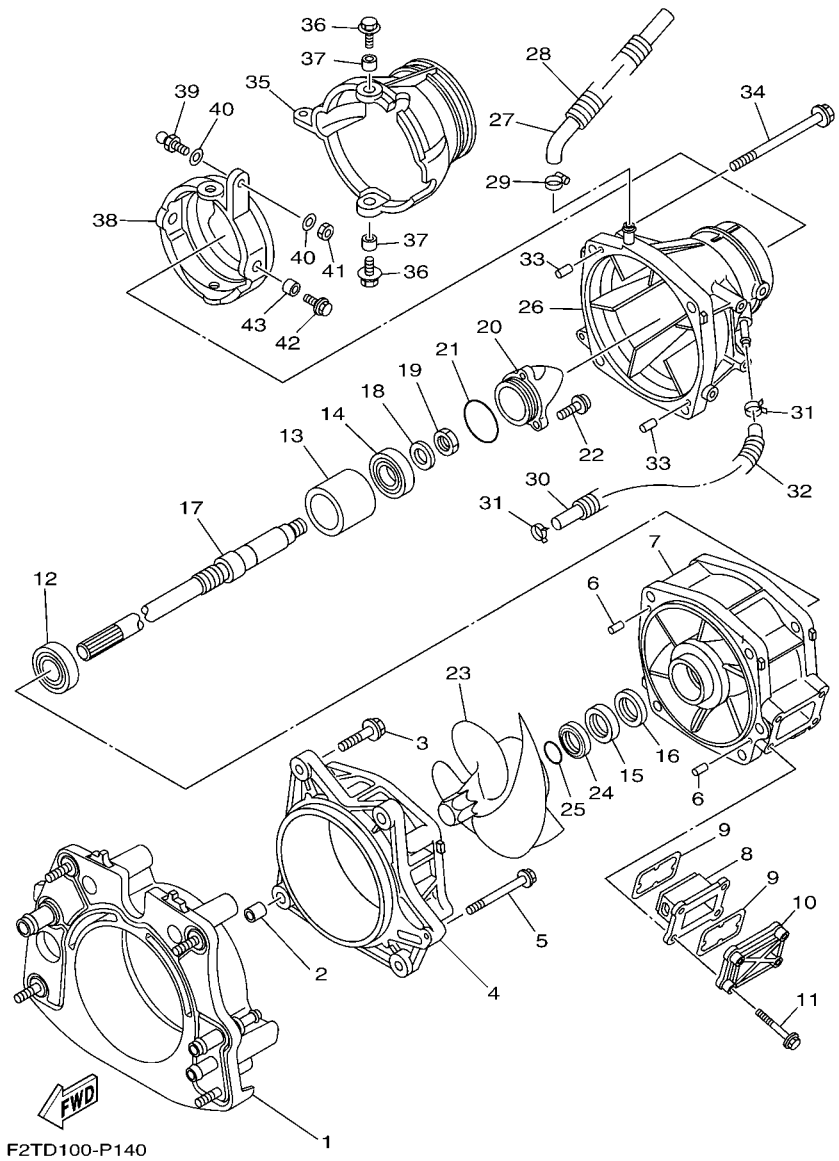

FIG. 15 JET UNIT 1

REF. NO.	PART NO.	DESCRIPTION	CAN	EUR	GENE			REMARKS
1	6CS–G5831–00	PLATE, TRANSOM	1	1	1			
2	99590–14016	PIN, DOWEL	2	2	2			
3	90119–10810	BOLT, WITH WASHER	4	4	4			
4	66V–51312–01–94	HOUSING, IMPELLER	1	1	1			
5	90119–06893	BOLT, WITH WASHER	1	1	1			
6	93606–12019	PIN, DOWEL	2	2	2			
7	6S5–51315–02	DUCT, IMPELLER	1	1	1			
8	6AN–G6882–00	FILTER	1	1	1			
9	66V–42414–00	O-RING	2	2	2			
10	6AN–G5214–00	COVER, WATER INLET 1	1	1	1			
11	90119–06897	BOLT, WITH WASHER	4	4	4			
12	93306–20654	BEARING	1	1	1			
13	6CS–G5538–00	SPACER 1	1	1	1			
14	93306–30537	BEARING	1	1	1			
15	93102–31009	OIL SEAL	1	1	1			
16	93101–31001	OIL SEAL	1	1	1			
17	6S5–45511–00	SHAFT, DRIVE	1	1	1			
18	9290P–20600	WASHER	1	1	1			
19	90170–20802	NUT	1	1	1			
20	6AN–R1326–00	CAP	1	1	1			
21	6S5–5111K–00	O-RING 1	1	1	1			
22	90110–06822	BOLT, HEXAGON SOCKET HEAD	3	3	3			
23	6CS–R1321–00	IMPELLER	1	1	1			
24	6BH–51348–01	SPACER	1	1	1			
25	93210–30611	O-RING	1	1	1			
26	6BH–R1318–01	NOZZLE	1	1	1			
27	6CS–U72M2–00	HOSE 1	1	1	1			

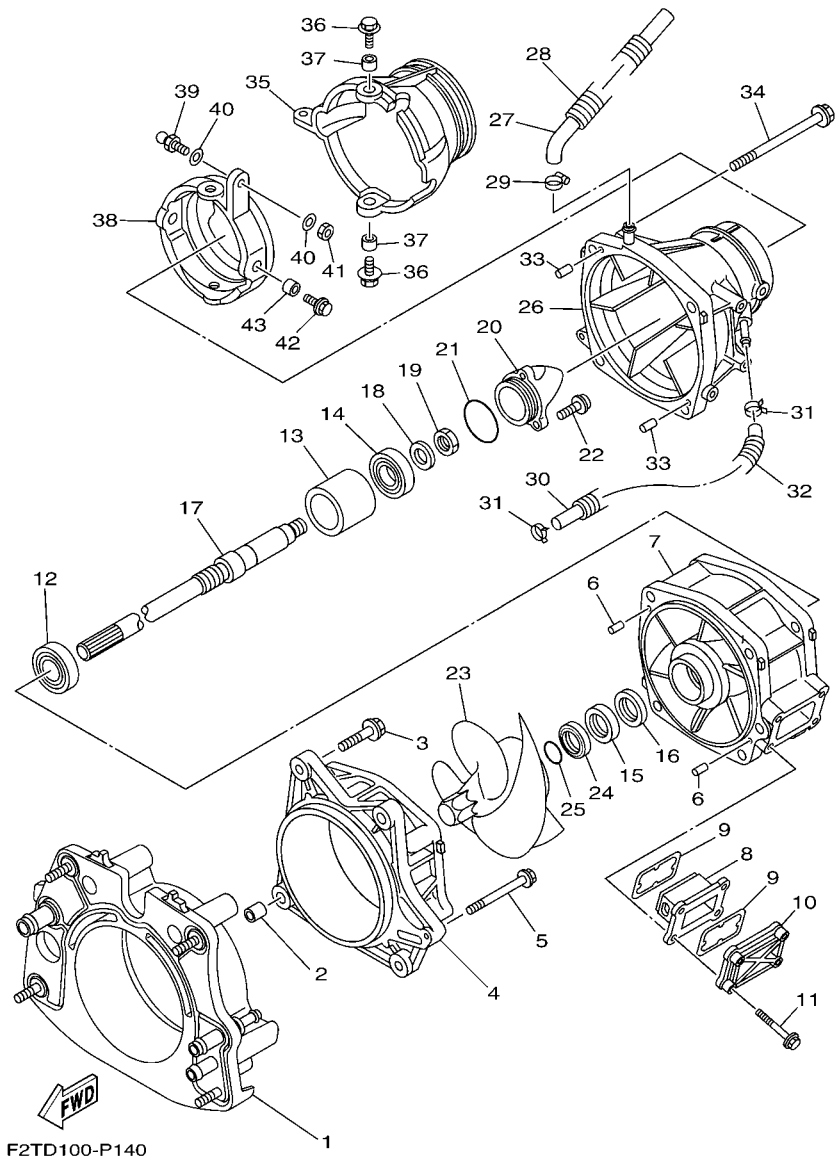

FIG. 15 JET UNIT 1

REF. NO.	PART NO.	DESCRIPTION	CAN	EUR	GENE			REMARKS
28	6CN–U773D–01	TUBE	1	1	1			
29	90601–118UF	BAND, HOSE 18	1	1	1			
30	6ET–U215E–00	HOSE	1	1	1			
31	90467–14803	CLIP	2	2	2			
32	6ET–U773D–00	TUBE	1	1	1			
33	93606–12019	PIN, DOWEL	2	2	2			
34	90119–10806	BOLT, WITH WASHER	4	4	4			
35	6S5–R1313–01	NOZZLE, DEFLECTOR	1	1	1			
36	90119–08851	BOLT, WITH WASHER	2	2	2			
37	90387–08M06	COLLAR	2	2	2			
38	6AN–R1190–00	RING,TRIM	1	1	1			
39	GH3–U146E–00	STUD, JOINT BALL	1	1	1			
40	90201–068M4	WASHER, PLATE	2	2	2			
41	9538R–06700	NUT	1	1	1			
42	90119–08851	BOLT, WITH WASHER	2	2	2			
43	90387–08M06	COLLAR	2	2	2			

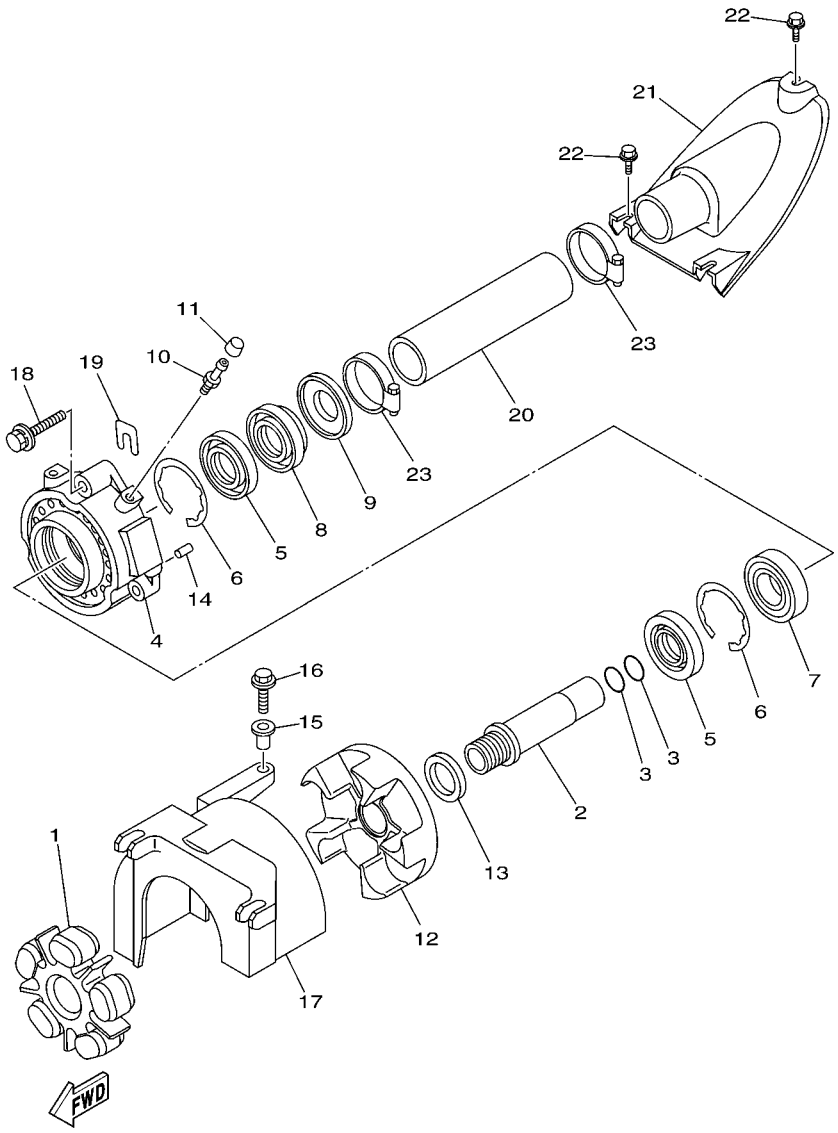

F2S1100-L160

FIG. 16 JET UNIT 2

REF. NO.	PART NO.	DESCRIPTION	CAN	EUR	GENE			REMARKS
1	6BH–4581J–00	RUBBER SHAFT COUPLING	1	1	1			
2	6S5–51323–00	SHAFT, COUPLER	1	1	1			
3	93210–22MF1	O-RING	2	2	2			
4	6S5–45332–00–94	HOUSING, BEARING	1	1	1			
5	93102–29008	OIL SEAL	2	2	2			
6	93450–66156	CIRCLIP	2	2	2			
7	93306–20655	BEARING	1	1	1			
8	93102–29009	OIL SEAL	1	1	1			
9	6ET–45613–00	WASHER, THRUST	1	1	1			
10	93700–06M03	NIPPLE, GREASE	1	1	1			
11	663–45119–00	CAP, GREASE NIPPLE	1	1	1			
12	6S5–45593–00–94	FLANGE, COUPLING 1	1	1	1			
13	6ET–E2289–00	WASHER	1	1	1			
14	93606–12019	PIN, DOWEL	2	2	2			
15	90387–06289	COLLAR	1	1	1			
16	90119–06891	BOLT, WITH WASHER	1	1	1			
17	6S5–R1381–01	COVER	1	1	1			
18	90119–089UU	BOLT, WITH WASHER	3	3	3			
19	GD0–U7249–00–05	SHIM (T=0.5)	2	2	2			UN
20	F2S–U883B–00	PIPE, 1	1	1	1			
21	F2S–U883E–00	JOINT, PIPE	1	1	1			
22	90109–06832	BOLT	3	3	3			
23	90601–152U3	BAND, HOSE 52	2	2	2			

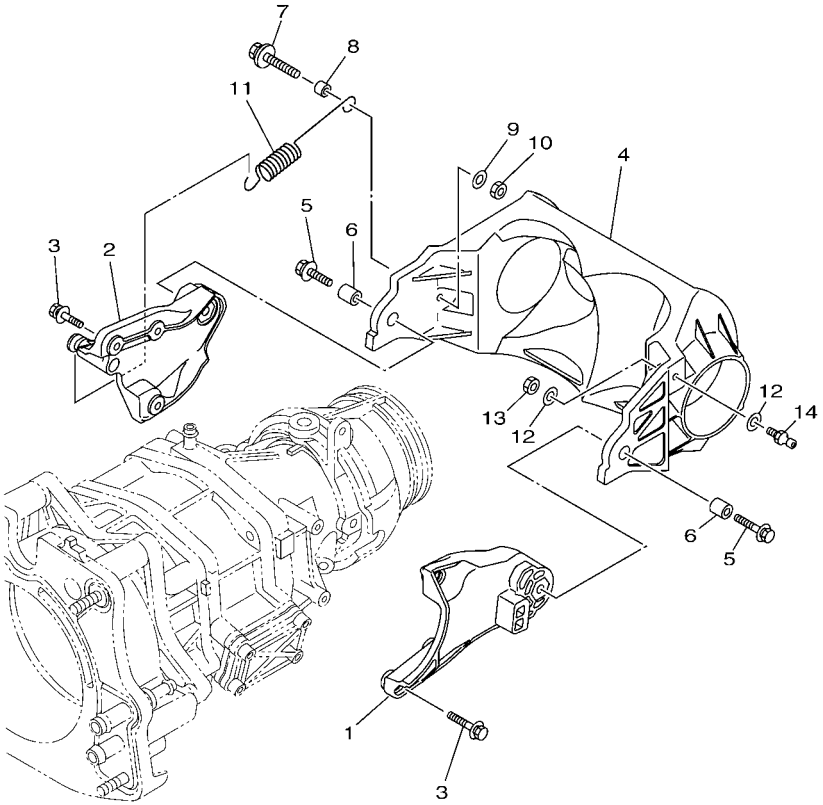

F3J7100-P170

FIG. 17 JET UNIT 3

REF. NO.	PART NO.	DESCRIPTION	CAN	EUR	GENE			REMARKS
1	6ET–R1341–00	BRACKET 1	1	1	1			
2	6ET–R1342–00	BRACKET 2	1	1	1			
3	90119–06891	BOLT, WITH WASHER	6	6	6			
4	6ET–R1314–01	GATE, REVERSE	1	1	1			
5	90119–08840	BOLT, WITH WASHER	2	2	2			
6	90387–08M30	COLLAR	2	2	2			
7	90119–069UX	BOLT, WITH WASHER	1	1	1			
8	90387–06M30	COLLAR	1	1	1			
9	90201–06801	WASHER, PLATE	1	1	1			
10	9538R–06600	NUT	1	1	1			
11	6S5–52358–00	SPRING, RETAINER	1	1	1			
12	90201–06801	WASHER, PLATE	2	2	2			
13	9538R–06600	NUT	1	1	1			
14	EU0–U1461–03	STUD, JOINT BALL	1	1	1			

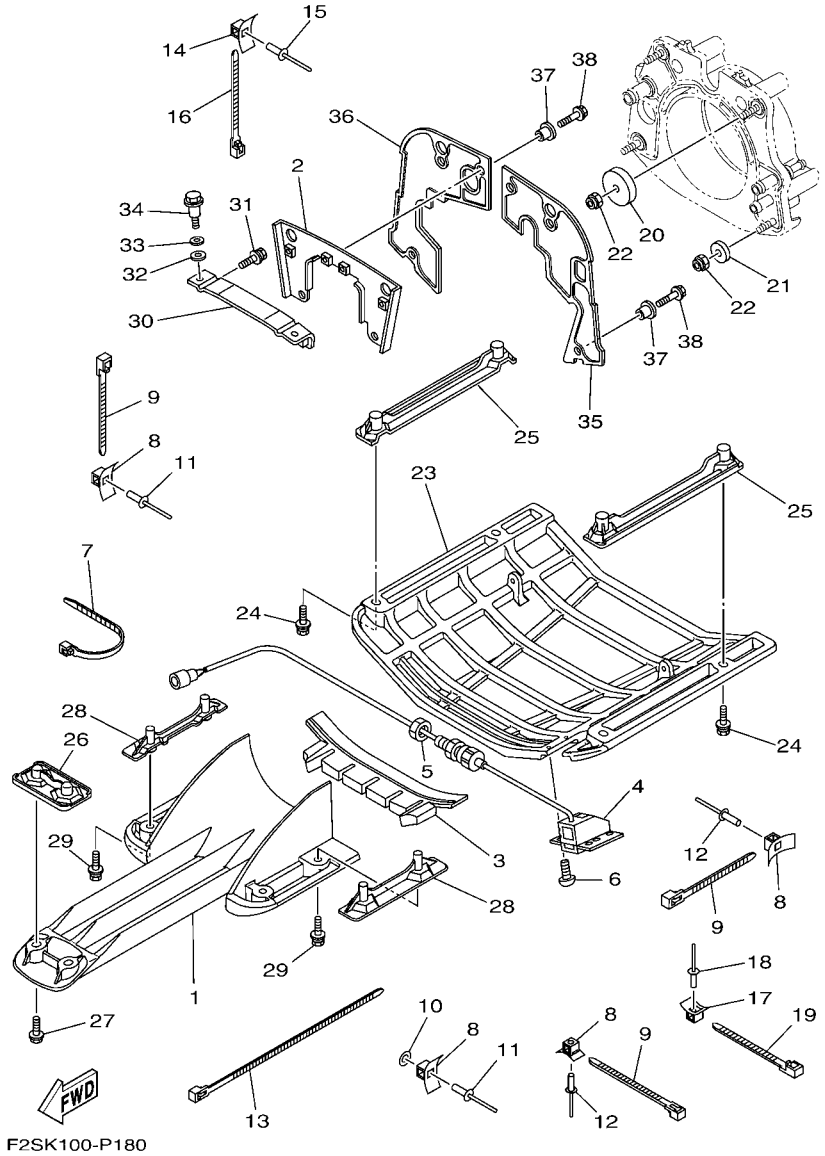

FIG. 18 JET UNIT 4

REF. NO.	PART NO.	DESCRIPTION	CAN	EUR	GENE			REMARKS
1	6CS–R1333–00	SCREEN, INTAKE	1	1	1			
2	6AN–R1341–01	BRACKET 1	1	1	1			
3	F2S–U72C0–01	SPACER	1	1	1			
4	F1S–U8K31–02	SENSOR SPEED	1	1	1			
5	F2C–U151S–00	NUT	1	1	1			
6	90150–05807	SCREW, ROUND HEAD	4	4	4			
7	90464–32801	CLAMP	1	1	1			
8	F1W–U828M–00	BASE, CLAMP	8	8	8			
9	90464–32801	CLAMP	7	7	7			
10	9299R–05200	WASHER	1	1	1			
11	90267–489U6	RIVET, BLIND	5	5	5			
12	90267–489U6	RIVET, BLIND	3	3	3			
13	90464–99801	CLAMP	1	1	1			
14	F1W–U828M–00	BASE, CLAMP	1	1	1			
15	90267–489U6	RIVET, BLIND	1	1	1			
16	90464–32801	CLAMP	1	1	1			
17	F1W–U828M–00	BASE, CLAMP	1	1	1			
18	90267–489U6	RIVET, BLIND	1	1	1			
19	90464–32801	CLAMP	1	1	1			
20	F1S–U725E–01	WASHER	2	2	2			
21	90201–10801	WASHER, PLATE	2	2	2			
22	9572R–10300	NUT, NYLON	4	4	4			
23	F2S–6273B–00	PLATE 2	1	1	1			
24	90119–08823	BOLT, WITH WASHER	4	4	4			
25	F1B–U8572–01	BRACKET 2	2	2	2			
26	F2S–U8577–00	BRACKET, 3	1	1	1			
27	90119–08823	BOLT, WITH WASHER	2	2	2			

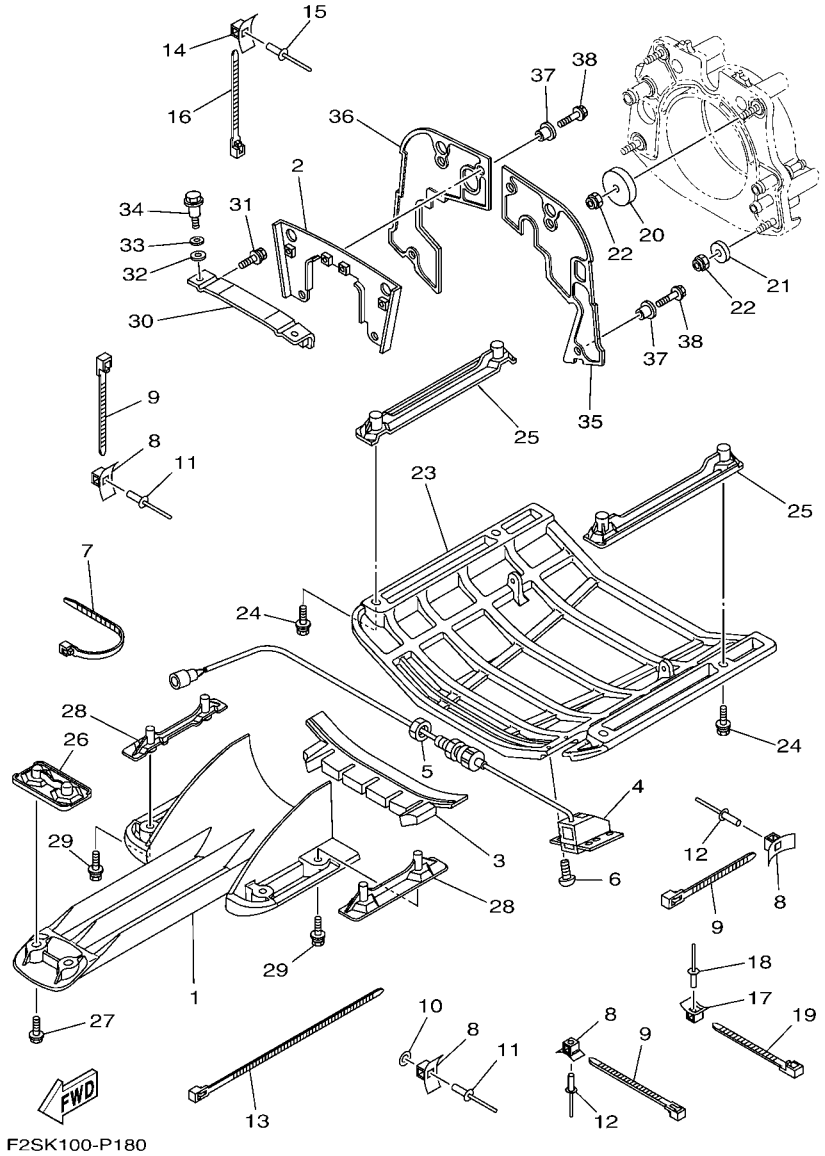

FIG. 18 JET UNIT 4

REF. NO.	PART NO.	DESCRIPTION	CAN	EUR	GENE			REMARKS
28	F1G–U8571–02	BRACKET 1	2	2	2			
29	90119–08823	BOLT, WITH WASHER	4	4	4			
30	F2C–U7557–01	BRACKET	1	1	1			
31	90119–089U7	BOLT, WITH WASHER	2	2	2			
32	90430–12002	GASKET	2	2	2			
33	92990–12200	WASHER, PLAIN	2	2	2			
34	90109–08041	BOLT	2	2	2			
35	F3J–U757E–00	PLATE, RUBBER 1	1	1	1			
36	F3J–U757F–00	PLATE, RUBBER 2	1	1	1			
37	90387–06080	COLLAR	6	6	6			
38	90119–06827	BOLT, WITH WASHER	6	6	6			

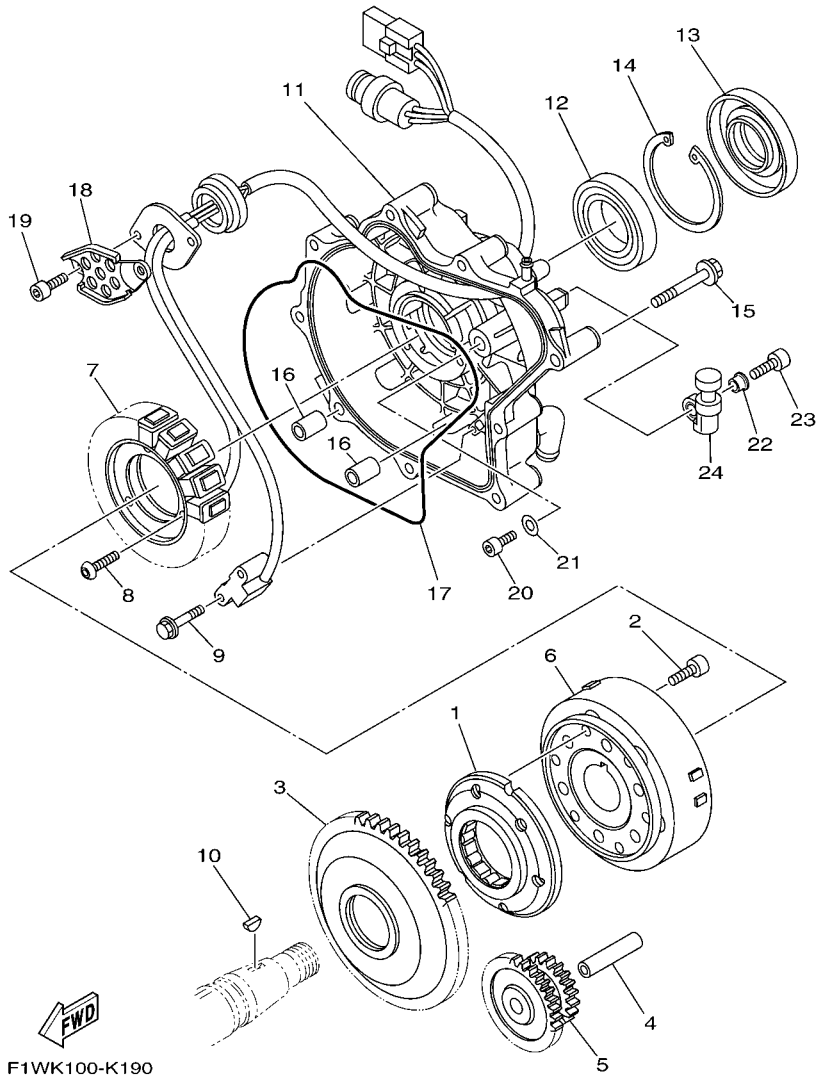

FIG. 19 GENERATOR

REF. NO.	PART NO.	DESCRIPTION	CAN	EUR	GENE			REMARKS
1	6S5–15590–00	STARTER ONE-WAY ASSY	1	1	1			
2	90110–08212	BOLT, HEXAGON SOCKET HEAD	6	6	6			
3	6S5–15515–00	GEAR 3	1	1	1			
4	6S5–15521–00	SHAFT 1	1	1	1			
5	6S5–15517–00	GEAR, IDLER 2	1	1	1			
6	6S5–81450–01	ROTOR ASSY	1	1	1			
7	6S5–81410–11	STATOR ASSY	1	1	1			
8	90149–06229	SCREW	3	3	3			
9	97513–05514	BOLT, WITH WASHER	2	2	2			
10	90280–03047	KEY, WOODRUFF	1	1	1			
11	6S5–81337–20	COVER, FLYWHEEL	1	1	1			
12	93306–00805	BEARING	1	1	1			
13	6S5–81167–10	OIL SEAL	1	1	1			
14	99009–72500	CIRCLIP	1	1	1			
15	90105–08249	BOLT, FLANGE	9	9	9			
16	99530–10114	PIN, DOWEL	2	2	2			
17	6S5–81168–00	O-RING	1	1	1			
18	6S5–81328–00	CLAMP	1	1	1			
19	91317–06014	BOLT	2	2	2			
20	91317–05010	BOLT	1	1	1			
21	90201–052E8	WASHER, PLATE	1	1	1			
22	90387–06M05	COLLAR	2	2	2			
23	91380–06020	BOLT	2	2	2			
24	6S5–81364–10	GROMMET	2	2	2			

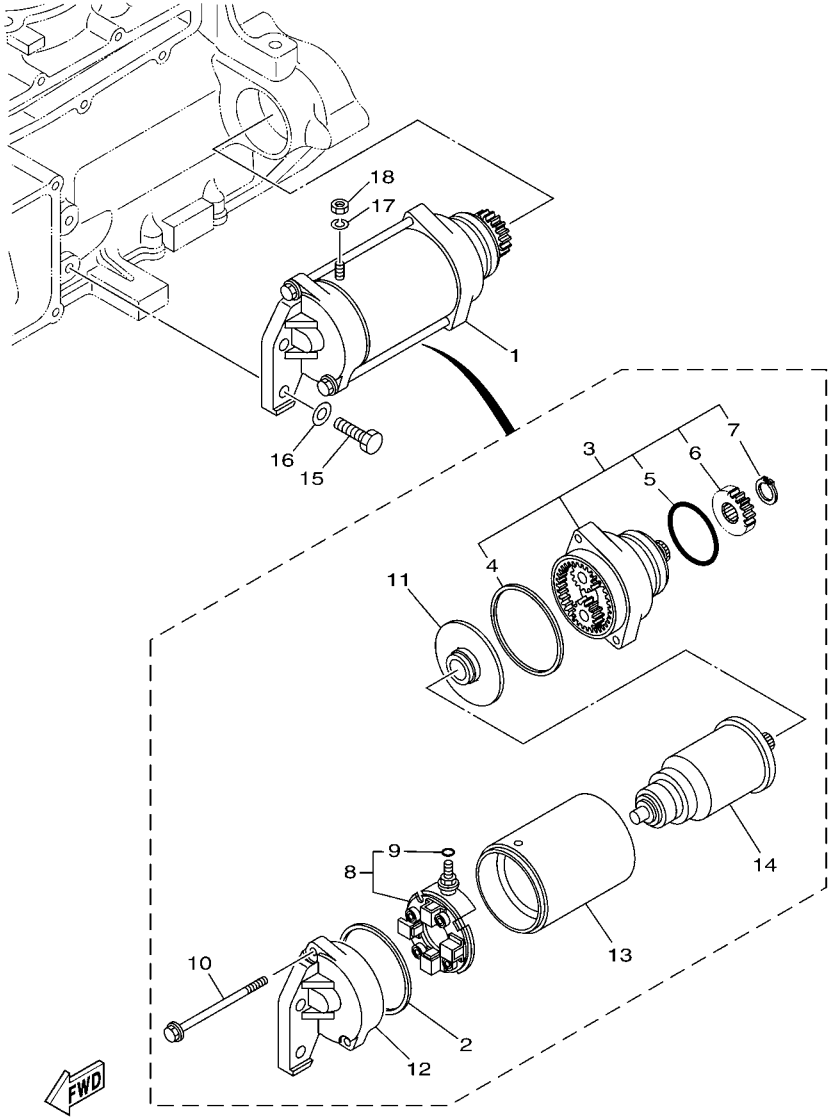

F1W1100-G200

FIG. 20 STARTING MOTOR

REF. NO.	PART NO.	DESCRIPTION	CAN	EUR	GENE			REMARKS
1	6S5–81800–00	STARTING MOTOR ASSY	1	1	1			
2	11H–81844–00	.GASKET	1	1	1			
3	6S5–81830–00	.FRONT BRACKET ASSY	1	1	1			
4	4G0–81844–00	..GASKET	1	1	1			
5	1J7–81847–60	..O-RING	1	1	1			
6	5EL–15511–00	..GEAR, STARTING MOTOR	1	1	1			
7	93410–12003	..CIRCLIP	1	1	1			
8	6S5–81840–00	.BRUSH HOLDER ASSY	1	1	1			
9	3TB–81847–00	..O-RING	1	1	1			
10	6S5–81826–00	.BOLT	2	2	2			
11	5EL–81845–00	.PLATE	1	1	1			
12	6S5–81820–00	.REAR BRACKET ASSY	1	1	1			
13	6S5–81810–00	.STATOR ASSY	1	1	1			
14	5A8–81850–10	.ARMATURE ASSY	1	1	1			
15	97013–08030	BOLT	2	2	2			
16	92903–08600	WASHER, PLATE	2	2	2			
17	92990–06100	WASHER, SPRING	1	1	1			
18	95380–06700	NUT	1	1	1			

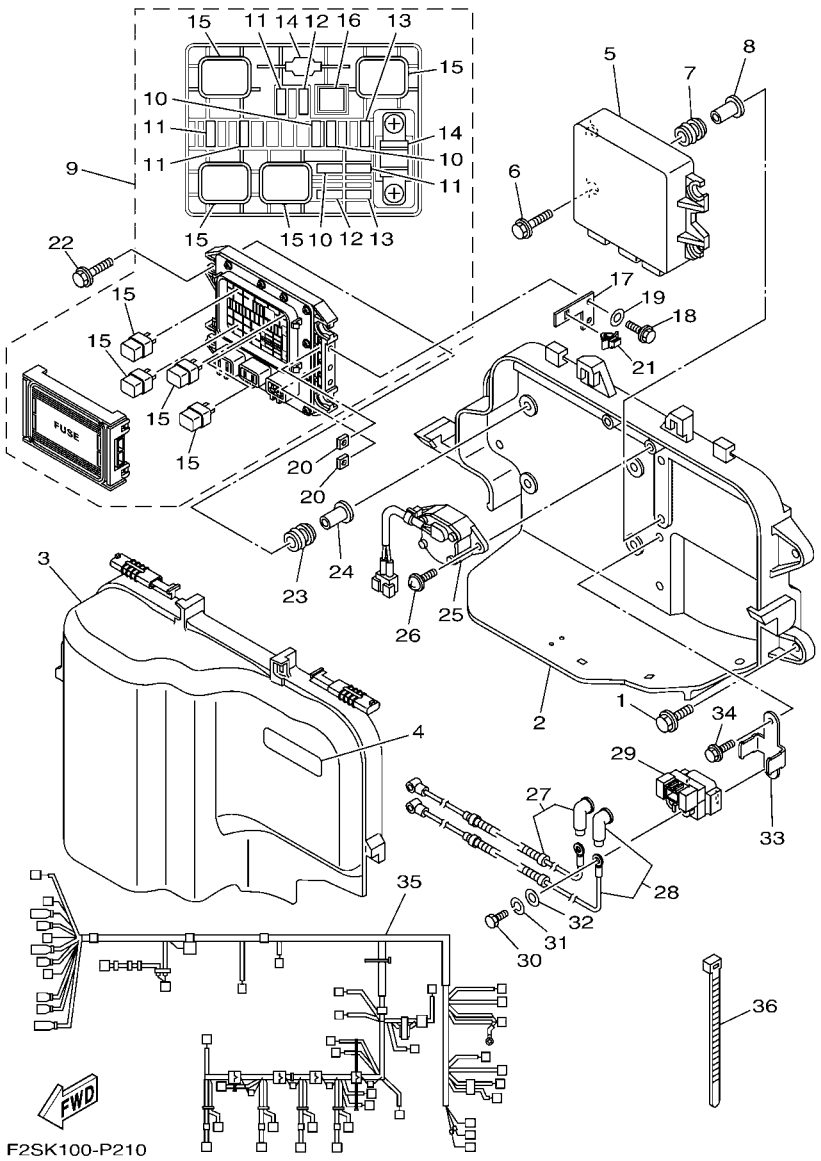

FIG. 21 ELECTRICAL 1

REF. NO.	PART NO.	DESCRIPTION	CAN	EUR	GENE			REMARKS
1	90119–089UT	BOLT, WITH WASHER	4	4	4			
2	6CS–81845–00	PLATE	1	1	1			
3	6S5–81942–11	COVER	1	1	1			
4	60E–83627–00	LABEL, CAUTION 7	1	1	1			
5	6CS–8591A–40	ENGINE CONTROL UNIT ASSY	1		1			FOR CAN, GENE
	6CS–8591A–50	ENGINE CONTROL UNIT ASSY		1				FOR EUR
6	90119–06M35	BOLT, WITH WASHER	4	4	4			
7	6A0–82317–00	DAMPER, IGNITION COIL	4	4	4			
8	90387–06119	COLLAR	4	4	4			
9	6EX–82170–00	FUSE BOX ASSY	1	1	1			
10	67F–82151–30	.FUSE (3A)	3	3	3			
11	67F–82151–40	.FUSE (10A)	4	4	4			
12	67F–82151–00	.FUSE (20A)	2	2	2			
13	67F–82151–10	.FUSE (30A)	2	2	2			
14	6EX–82151–00	.FUSE (50A)	2	2	2			
15	6EX–8195A–00	.RELAY ASSY	4	4	4			
16	6EX–2812A–00	.PULLER, FUSE	1	1	1			
17	6CS–82588–00	PLATE	1	1	1			
18	97095–06014	BOLT	2	2	2			
19	92995–06600	WASHER	2	2	2			
20	90173–06015	NUT, SQUARE	2	2	2			
21	90464–09M47	CLAMP	1	1	1			
22	90119–06M35	BOLT, WITH WASHER	4	4	4			
23	6A0–82317–00	DAMPER, IGNITION COIL	4	4	4			
24	90387–06119	COLLAR	4	4	4			
25	6S5–8259E–00	SWITCH ASSY	1	1	1			
26	97780–60520	SCREW, TAPPING	2	2	2			

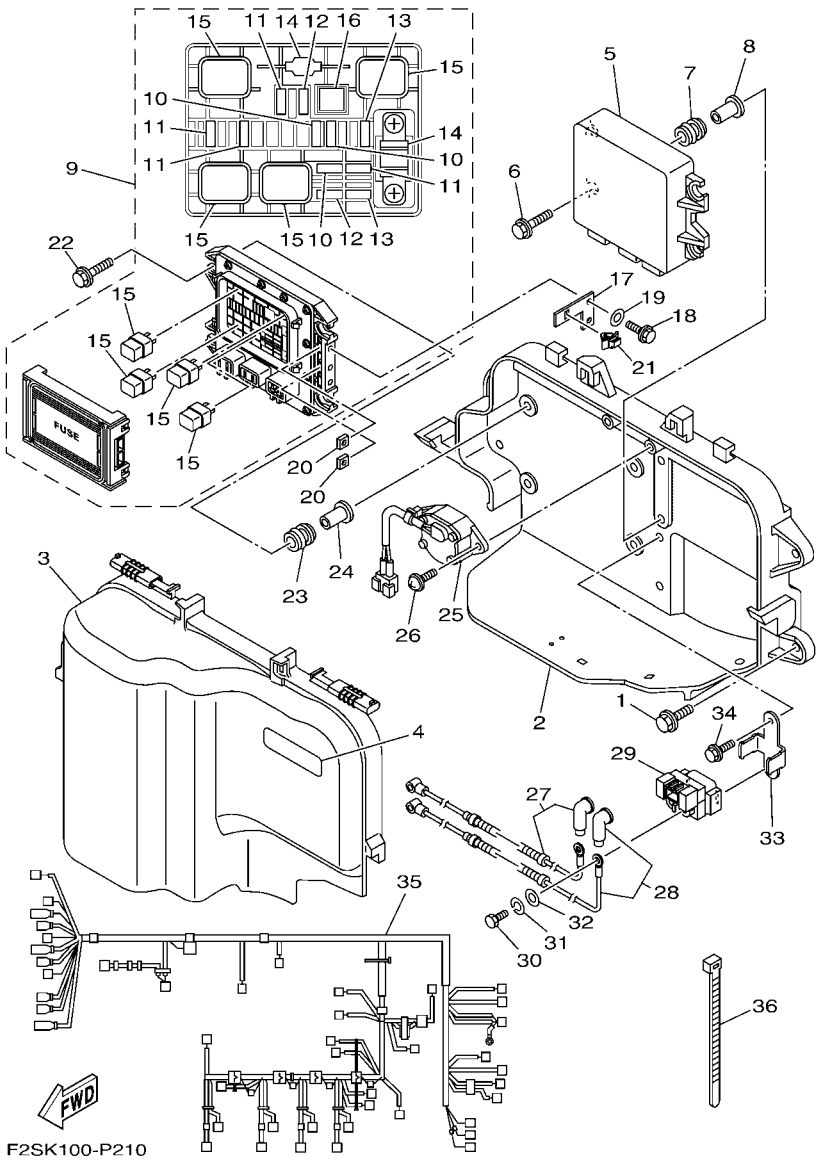

FIG. 21 ELECTRICAL 1

REF. NO.	PART NO.	DESCRIPTION	CAN	EUR	GENE			REMARKS
27	6CS–82115–00	WIRE, PLUS LEAD	1	1	1			
28	6CS–82117–00	WIRE, LEAD	1	1	1			
29	1B7–81940–00	STARTER RELAY ASSY (2768102-A)	1	1	1			
30	97095–06012	BOLT	2	2	2			
31	92995–06100	WASHER, SPRING	2	2	2			
32	92995–06600	WASHER	2	2	2			
33	6CS–81953–00	STAY, RELAY	1	1	1			
34	95814–06012	BOLT, FLANGE	2	2	2			
35	6CS–8259L–20	WIRE HARNESS ASSY 1	1	1	1			
36	90465–14M66	CLAMP	2	2	2			

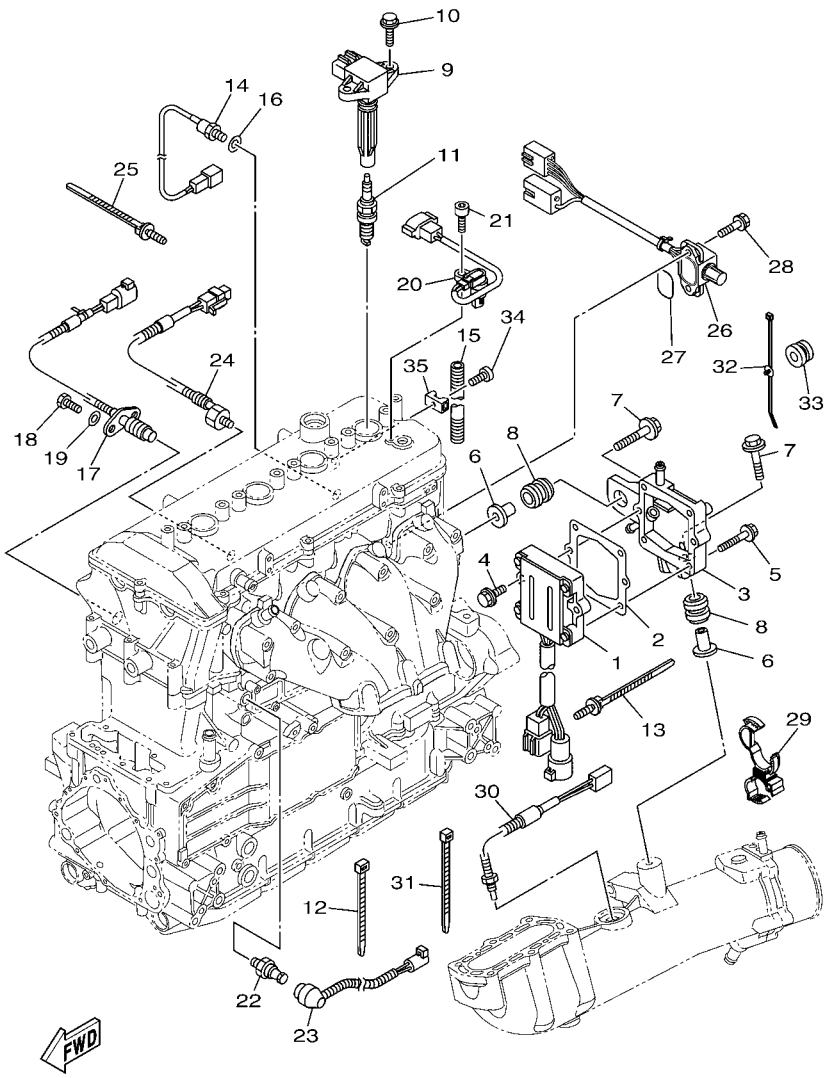

F2SD100-N220

FIG. 22 ELECTRICAL 2

REF. NO.	PART NO.	DESCRIPTION	CAN	EUR	GENE			REMARKS
1	6S5–81960–10	RECTIFIER & REGULATOR ASSY	1	1	1			
2	6S5–81975–00	PLATE, RECTIFIER FITTING	1	1	1			
3	6S5–81972–01–94	COVER, RECTIFIER	1	1	1			
4	90119–06MA3	BOLT, WITH WASHER	2	2	2			
5	90119–06048	BOLT, WITH WASHER	4	4	4			
6	90387–08M37	COLLAR	2	2	2			
7	90119–08M22	BOLT, WITH WASHER	2	2	2			
8	90480–22M15	GROMMET	2	2	2			
9	6S5–82310–00	IGNITION COIL ASSY	4	4	4			
10	90105–06903	BOLT, FLANGE	8	8	8			
11	94702–00427	PLUG, SPARK (NGK LFR6A)	4	4	4			
12	90465–13M18	CLAMP	9	9	9			
13	90464–31001	CLAMP	1	1	1			
14	61A–85790–00	THERMOSENSOR ASSY	1	1	1			
15	90446–10MH3	HOSE (L350)	1	1	1			
16	92990–10600	WASHER, PLATE	1	1	1			
17	60E–82560–01	THERMO SWITCH ASSY	1	1	1			
18	97095–06016	BOLT	2	2	2			
19	92995–06600	WASHER	2	2	2			
20	60E–85896–01	SENSOR, CAM POSITION	1	1	1			
21	91380–06016	BOLT	1	1	1			
22	68V–82504–00	OIL PRESSURE SWITCH ASSY	1	1	1			
23	6S5–81315–00	LEAD WIRE ASSY	1	1	1			
24	6AN–85780–00	SENSOR, KNOCK	1	1	1			
25	90464–31001	CLAMP	1	1	1			
26	6CS–8273J–10	EARTH PLATE COMP.	1	1	1			
27	93210–32172	O-RING	1	1	1			

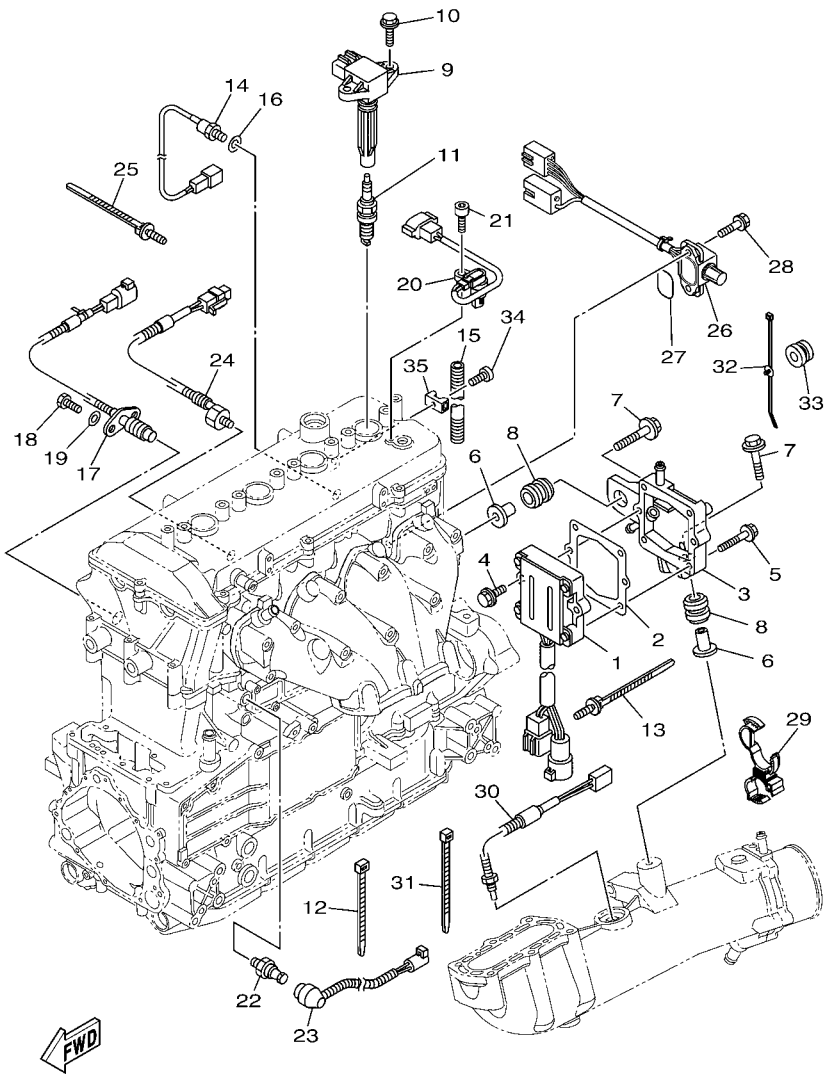

F2SD100-N220

FIG. 22 ELECTRICAL 2

REF. NO.	PART NO.	DESCRIPTION	CAN	EUR	GENE			REMARKS
28	90119–06MA3	BOLT, WITH WASHER	2	2	2			
29	90464–20008	CLAMP	1	1	1			
30	6AA–85790–00	THERMOSENSOR ASSY	1	1	1			
31	90464–31001	CLAMP	1	1	1			
32	90464–31002	CLAMP	1	1	1			
33	90480–20132	GROMMET	1	1	1			
34	92014–06012	BOLT, BUTTON HEAD	1	1	1			
35	60E–1244E–00	BRACKET 1	1	1	1			

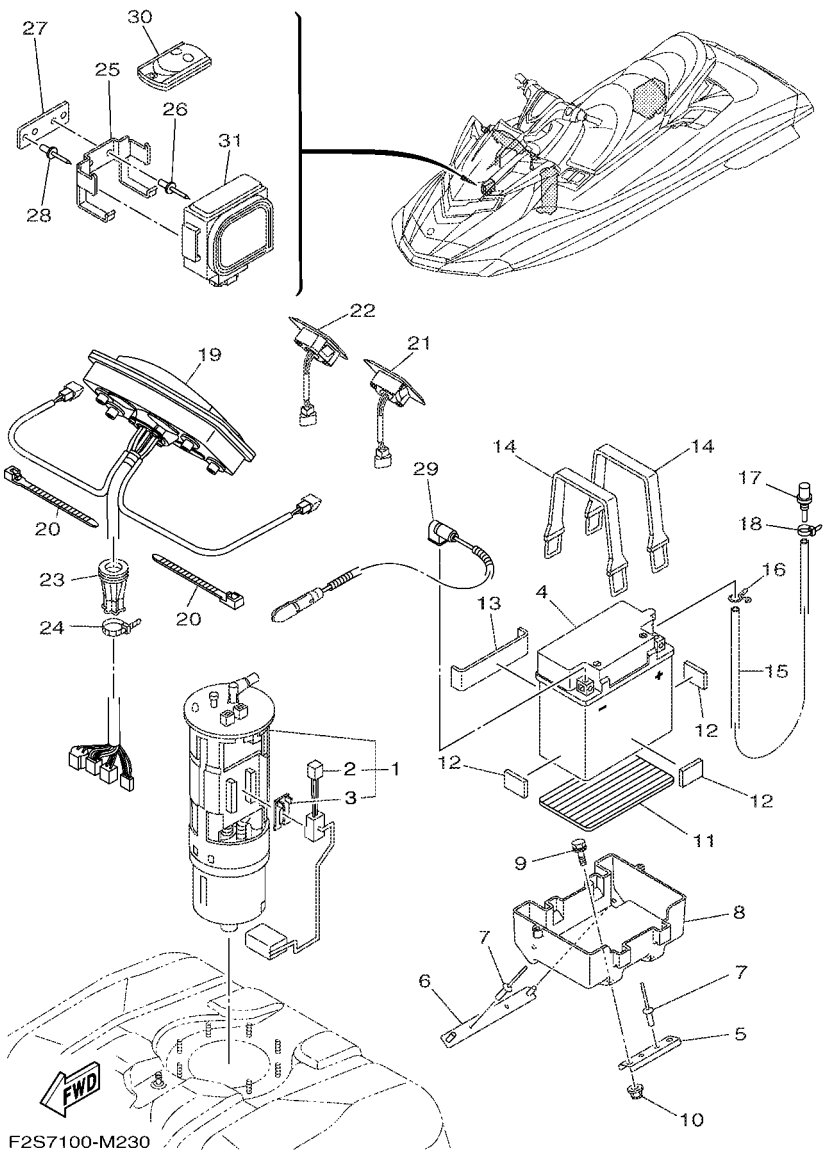

FIG. 23 ELECTRICAL 3

REF. NO.	PART NO.	DESCRIPTION	CAN	EUR	GENE			REMARKS
1	6S5–13907–01	FUEL PUMP COMP.	1	1	1			
2	6S5–682E0–00	.FUEL SENDER ASSY	1	1	1			
3	60E–82556–00	.DAMPER, STOPPER	1	1	1			
4	EU0–U8217–H2	BATTERY (YB16CL-B)	1	1	1			
5	F2S–U8592–00	PLATE, BASE 2	1	1	1			
6	F2S–U8593–00	PLATE, BASE 3	1	1	1			
7	90267–489U1	RIVET,BLIND	4	4	4			
8	F2S–U8211–00	CASE, BATTERY	1	1	1			
9	90119–06832	BOLT, WITH WASHER	2	2	2			
10	F2N–U142L–00	NUT, LOCK	2	2	2			
11	F1S–U8221–00	PAD, BATTERY	1	1	1			
12	EU0–U8221–30	PAD, BATTERY 2	3	3	3			
13	F1K–U8221–00	PAD, BATTERY	1	1	1			
14	EU0–U821D–00	BAND,BATTERY 1	2	2	2			
15	F0D–U785G–10	HOSE, AIR VENT	1	1	1			
16	90467–089U1	CLIP	1	1	1			
17	GJ3–6215F–00	NIPPLE	1	1	1			
18	90465–11829	CLAMP	1	1	1			
19	F2S–6820A–30	METER ASSY	1	1	1			
20	90464–32801	CLAMP	4	4	4			
21	F2S–68090–00	SWITCH ASSY.	1	1	1			
22	F2S–68090–10	SWITCH ASSY.	1	1	1			
23	F1X–U822E–00	GROMMET	1	1	1			
24	90464–32801	CLAMP	1	1	1			
25	F1W–U826C–00	BRACKET	1	1	1			
26	90267–489U1	RIVET,BLIND	2	2	2			
27	F1W–U8376–00	PLATE	1	1	1			

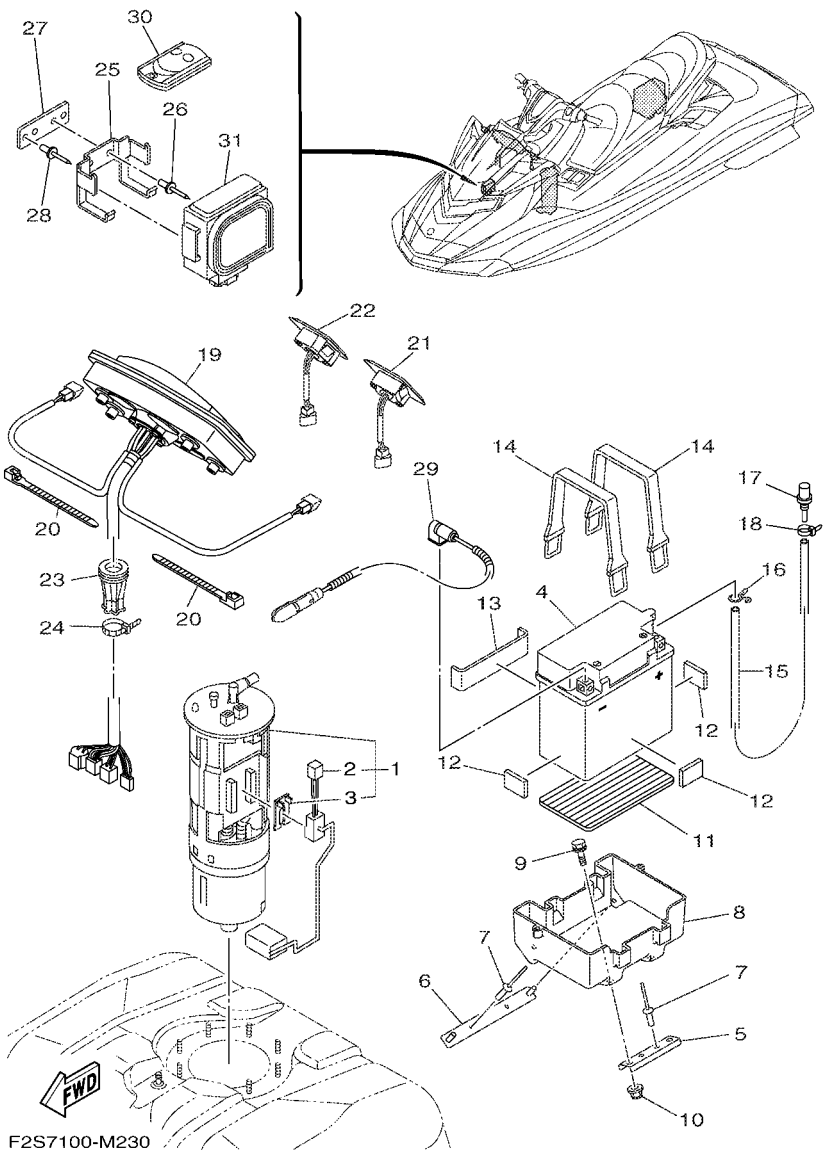

FIG. 23 ELECTRICAL 3

REF. NO.	PART NO.	DESCRIPTION	CAN	EUR	GENE			REMARKS
28	90267–489U1	RIVET,BLIND	2	2	2			
29	6S5–82116–00	WIRE, MINUS LEAD	1	1	1			
30	6B6–86261–00	XMTR. COMP.	2					FOR CAN
	6B6–86261–10	XMTR. COMP.		2	2			FOR EUR, GENE
31	6B6–86265–00	RECEIVER COMPLETE	1					FOR CAN
	6B6–86265–10	RECEIVER COMPLETE		1	1			FOR EUR, GENE

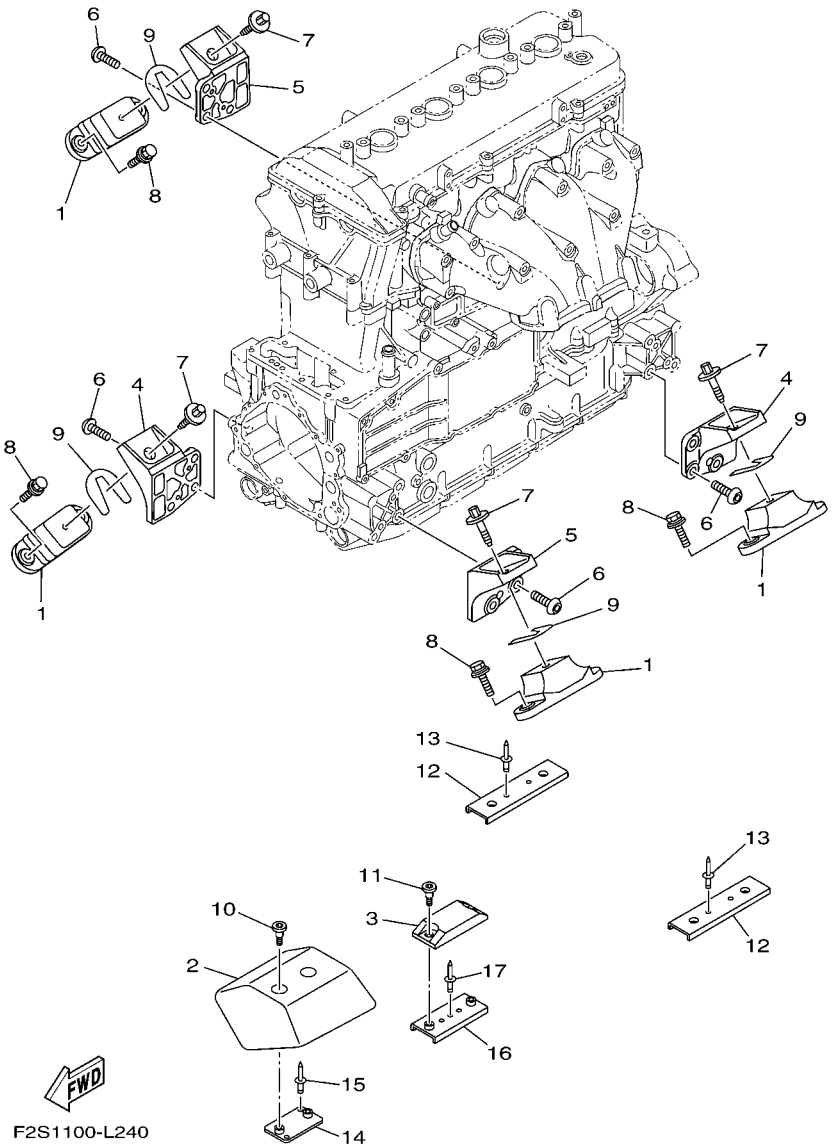

FIG. 24 ENGINE MOUNT

REF. NO.	PART NO.	DESCRIPTION	CAN	EUR	GENE			REMARKS
1	67X–44517–10	MOUNT RUBBER	4	4	4			
2	6BH–G4532–00	STOPPER, UPPER MOUNT	1	1	1			
3	6BH–G4574–00	STOPPER, LOWER MOUNT RUBBER	1	1	1			
4	6BH–41661–00–94	BRACKET 1	2	2	2			
5	6BH–41662–00–94	BRACKET 2	2	2	2			
6	90149–10052	SCREW	12	12	12			
7	90119–08859	BOLT, WITH WASHER	4	4	4			
8	F2S–U1355–00	BOLT	8	8	8			
9	EU0–U7354–00–01	SHIM (T=0.1)	10	10	10			UN
	EU0–U7354–00–03	SHIM (T=0.3)	10	10	10			UN
	EU0–U7354–00–05	SHIM (T=0.5)	10	10	10			UN
	EU0–U7354–00–10	SHIM (T=1.0)	10	10	10			UN
	EU0–U7354–00–20	SHIM (T=2.0)	10	10	10			UN
10	90109–06874	BOLT	2	2	2			
11	90109–06875	BOLT	2	2	2			
12	F2S–U732B–00	PLATE	2	2	2			
13	90267–489U2	RIVET, BLIND	4	4	4			
14	F2S–U732B–10	PLATE	1	1	1			
15	90267–489U2	RIVET, BLIND	2	2	2			
16	F2M–U732B–00	PLATE	1	1	1			
17	90267–489U2	RIVET, BLIND	1	1	1			

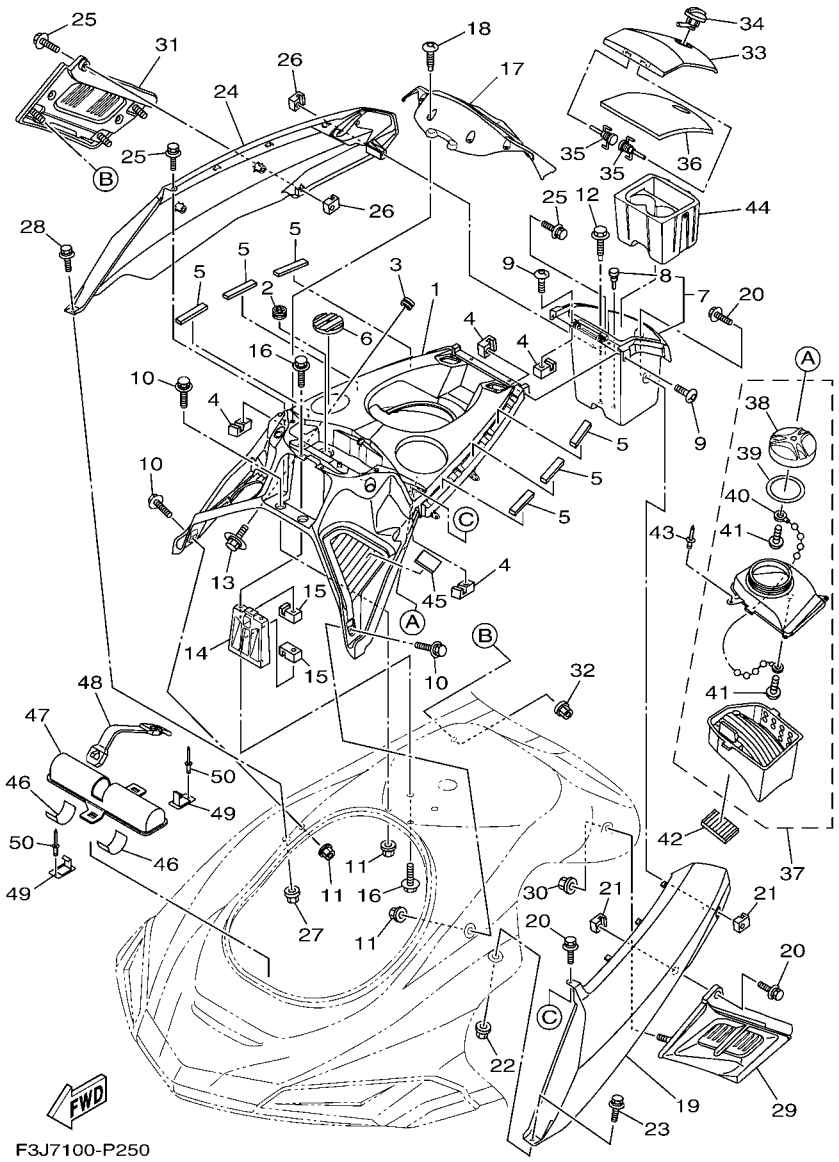

FIG. 25 ENGINE HATCH 1

REF. NO.	PART NO.	DESCRIPTION	CAN	EUR	GENE			REMARKS
1	F2S–U5554–02	COVER, CENTER	1	1	1			
2	F1X–U828E–01	DAMPER 1	2	2	2			
3	90480–19800	GROMMET	4	4	4			
4	F1X–U517E–01	NUT	6	6	6			
5	F0X–U515E–01	DAMPER 2	6	6	6			
6	F2S–U3844–00	MAT	1	1	1			
7	F2S–U1708–02	GLOVE BOX HATCH ASSY.	1	1	1			
8	90605–502U2	.PLUG	1	1	1			
9	F2N–67823–10	SCREW	4	4	4			
10	90119–06880	BOLT, WITH WASHER	4	4	4			
11	F2N–U142L–00	NUT, LOCK	4	4	4			
12	90119–06858	BOLT, WITH WASHER	1	1	1			
13	90119–05803	BOLT, WITH WASHER	4	4	4			
14	F2S–U517F–00	HOOK,LID LOCK	1	1	1			
15	F1X–U517E–01	NUT	4	4	4			
16	90119–06880	BOLT, WITH WASHER	4	4	4			
17	F2S–U8262–01–P0	COVER METER (BMG)	1	1	1			
18	F2S–U13C1–00	SCREW	4	4	4			
19	F3J–U377B–00–P1	COVER,SIDE 1 (DNMC)	1	1	1			
20	90119–06880	BOLT, WITH WASHER	3	3	3			
21	F1X–U517E–01	NUT	2	2	2			
22	F2N–U142L–00	NUT, LOCK	1	1	1			
23	90119–06880	BOLT, WITH WASHER	1	1	1			
24	F3J–U377C–00–P1	COVER,SIDE 2 (DNMC)	1	1	1			
25	90119–06880	BOLT, WITH WASHER	3	3	3			
26	F1X–U517E–01	NUT	2	2	2			
27	F2N–U142L–00	NUT, LOCK	1	1	1			

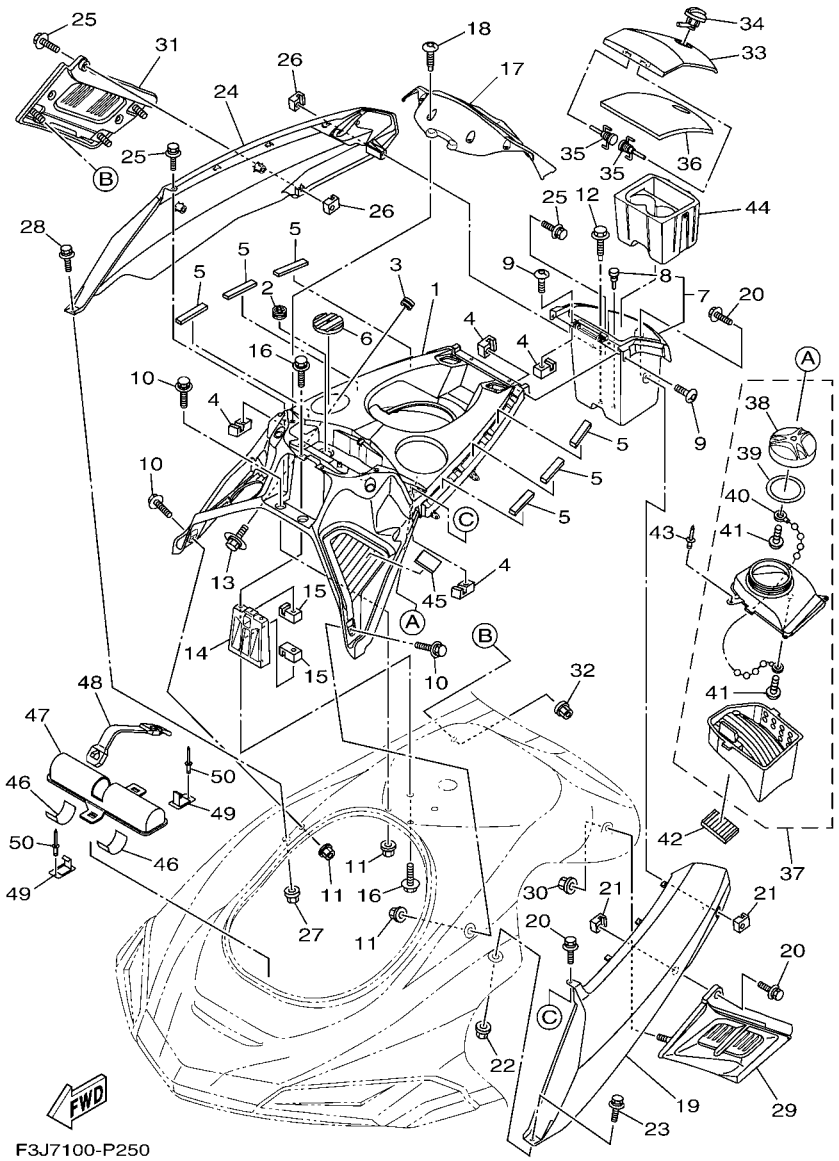

FIG. 25 ENGINE HATCH 1

REF. NO.	PART NO.	DESCRIPTION	CAN	EUR	GENE			REMARKS
28	90119–06880	BOLT, WITH WASHER	1	1	1			
29	F2S–U370J–00	SIDE ORNAMENT ASSY 1	1	1	1			
30	F2N–U142L–00	NUT, LOCK	3	3	3			
31	F2S–U370K–00	SIDE ORNAMENT ASSY 2	1	1	1			
32	F2N–U142L–00	NUT, LOCK	3	3	3			
33	F2S–U517H–00	LID HATCH	1	1	1			
34	F1X–62875–00	LOCK	1	1	1			
35	F1B–6517R–00	PIN, HINGE	2	2	2			
36	F2S–U519D–00	PACKING CASE	1	1	1			
37	F2S–U591A–00	CASE,ASSY 1	1	1	1			
38	F1W–U591C–01	.CAP,CASE	1	1	1			
39	F1W–U591D–00	.PACKING,CASE	1	1	1			
40	F2S–U7835–01	.CHAIN BALL	1	1	1			
41	F2S–U316C–00	.SCREW (FL66314300)	1	1	1			
42	F1K–U759C–00	MAT 2	1	1	1			
43	90267–48807	RIVET, BLIND	3	3	3			
44	F2S–U5633–00	HOLDER, DRINK	1	1	1			
45	GJ1–U759C–00	MAT 2	1	1	1			
46	F1K–U759C–00	MAT 2	2	2	2			
47	F1K–U5983–01	BOX, FIRE EXTINGUISHER	1	1	1			
48	F2P–U828K–00	BAND 1	1	1	1			
49	F1K–U5772–04	HOOK A	2	2	2			
50	90267–489U1	RIVET,BLIND	2	2	2			

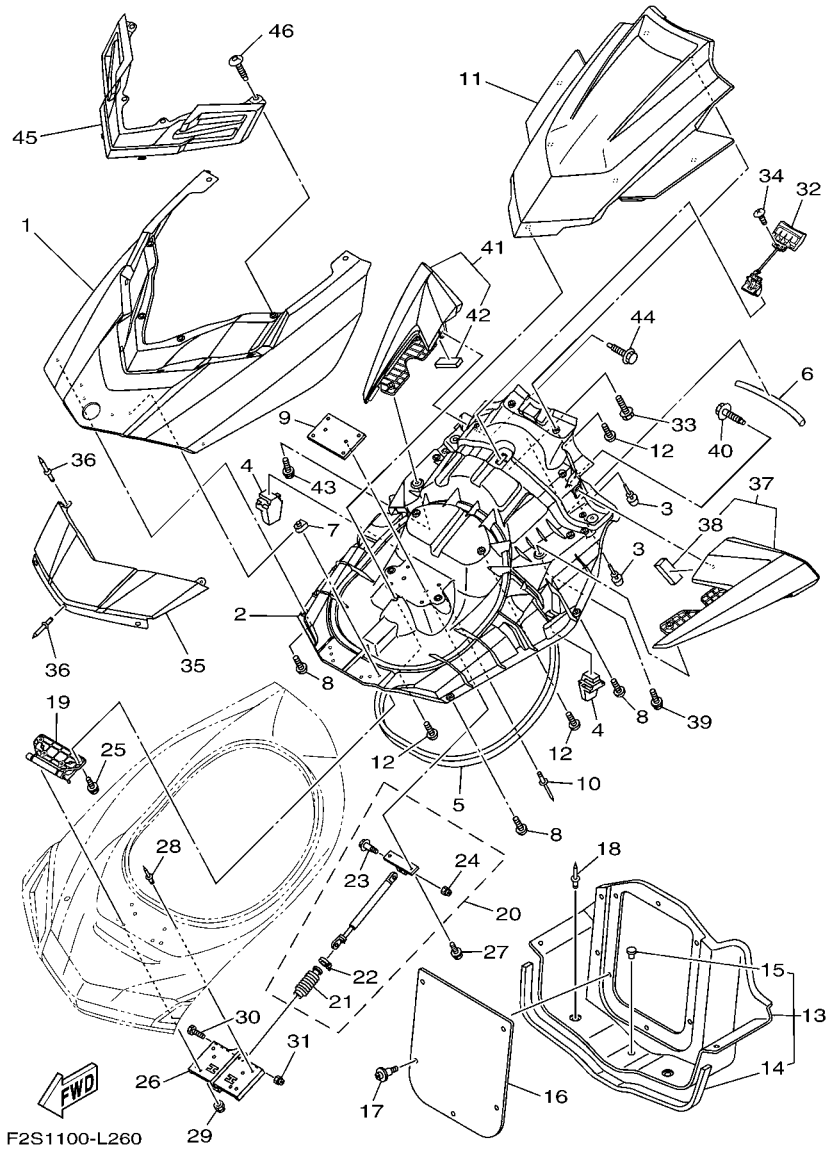

FIG. 26 ENGINE HATCH 2

REF. NO.	PART NO.	DESCRIPTION	CAN	EUR	GENE			REMARKS
1	F2S–U517B–01–P1	LID, ENGINE ROOM (DNMC)	1	1	1			
2	F2S–U519G–02	INNER, ENGINE HATCH	1	1	1			
3	F1W–U3768–01	CUSHION, RUBBER	4	4	4			
4	F2S–U5135–00	STOPPER, HATCH 1	2	2	2			
5	F2S–U2663–00	PACKING 1	1	1	1			
6	F2S–U266B–00	PACKING 3	1	1	1			
7	90183–06902	NUT, SPRING	4	4	4			
8	F2S–U13C1–00	SCREW	8	8	8			
9	F1W–U5148–00	PLATE, HATCH	1	1	1			
10	90267–48807	RIVET, BLIND	4	4	4			
11	F2S–U515N–01–P1	VISOR (DNMC)	1	1	1			
12	F2S–U13C1–00	SCREW	7	7	7			
13	F2S–U475B–00	LOCKER,BOW	1	1	1			
14	F2N–U266C–01	.PACKING 4	1	1	1			
15	90605–502U1	.PLUG, BLIND	1	1	1			
16	F2S–U475F–00	PLATE, LOKER BOW	1	1	1			
17	90269–08801	RIVET	5	5	5			
18	90269–08801	RIVET	4	4	4			
19	F2S–U517D–00	HINGE, LID	1	1	1			
20	F2S–6514S–00	DAMPER ASSY	1	1	1			
21	F1W–6514T–00	.COVER, DAMPER	1	1	1			
22	1UA–82591–00	.BAND	1	1	1			
23	90109–06218	.BOLT	1	1	1			
24	95720–06300	.NUT, SELF-LOCKING	1	1	1			
25	90119–06895	BOLT, WITH WASHER	4	4	4			
26	F2S–U518E–00	PLATE, HINGE LID	1	1	1			
27	90119–069UH	BOLT, WITH WASHER	2	2	2			

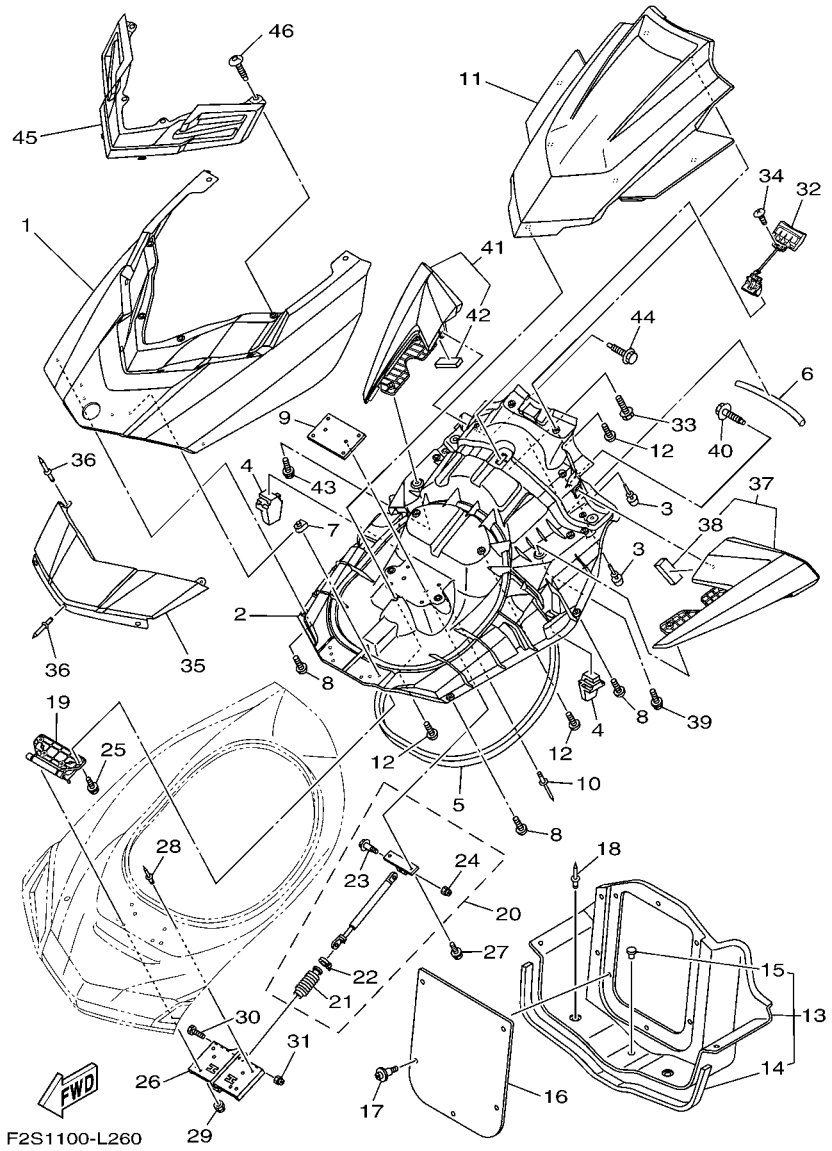

FIG. 26 ENGINE HATCH 2

REF. NO.	PART NO.	DESCRIPTION	CAN	EUR	GENE			REMARKS
28	90267–48020	RIVET, BLIND	2	2	2			
29	9572R–06300	NUT, NYLON	4	4	4			
30	90109–06218	BOLT	1	1	1			
31	9572R–06300	NUT, NYLON	1	1	1			
32	F2S–U517C–01	LOCK, LID	1	1	1			
33	90119–059U4	BOLT, WITH WASHER	2	2	2			
34	9778R–50010	SCREW, TAPPING	2	2	2			
35	F2S–U513M–01–P1	COVER, FRONT (DNMC)	1	1	1			
36	90267–489U6	RIVET, BLIND	5	5	5			
37	F2S–U590D–31	MIRROR ASSY. 1	1	1	1			
38	F1K–U266B–00	.PACKING 3	1	1	1			
39	90119–089UL	BOLT, WITH WASHER	2	2	2			
40	90119–06858	BOLT, WITH WASHER	1	1	1			
41	F2S–U590E–31	MIRROR ASSY. 2	1	1	1			
42	F1K–U266B–00	.PACKING 3	1	1	1			
43	90119–089UL	BOLT, WITH WASHER	2	2	2			
44	90119–06858	BOLT, WITH WASHER	1	1	1			
45	F2S–U510D–01	CENTER ORNAMENT ASSY	1	1	1			
46	F2S–U13C1–00	SCREW	4	4	4			

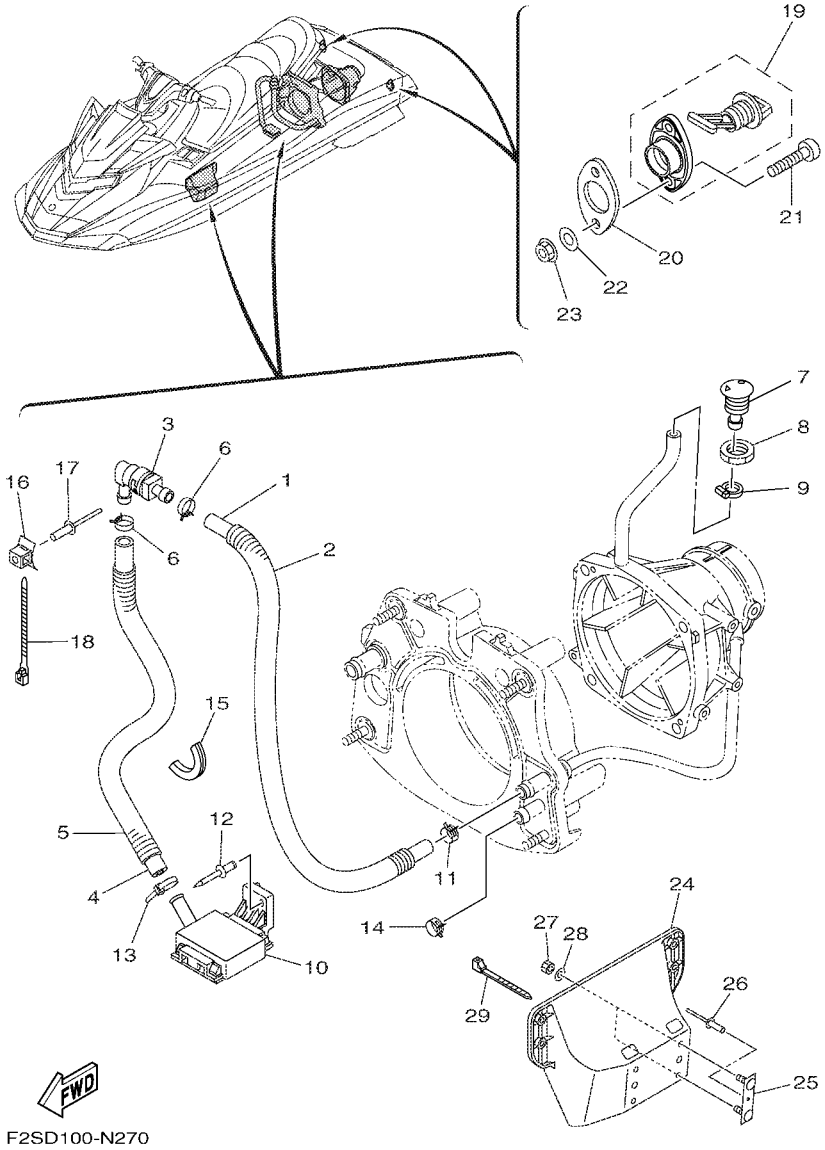

FIG. 27 HULL & DECK

REF. NO.	PART NO.	DESCRIPTION	CAN	EUR	GENE			REMARKS
1	90445–20804	HOSE (L860)	1	1	1			
2	90446–27M73	HOSE (L700)	1	1	1			
3	68N–5112T–00	JOINT, HOSE	1	1	1			
4	90445–20800	HOSE (L500)	1	1	1			
5	90446–27M55	TUBE (L400)	1	1	1			
6	90467–18804	CLIP	2	2	2			
7	F1W–U269B–00	SPOUT	1	1	1			
8	EU0–61652–00	NUT	1	1	1			
9	90601–118UF	BAND, HOSE 18	1	1	1			
10	F1B–U761D–02	STRAINER, BILGE	1	1	1			
11	90467–21800	CLIP	1	1	1			
12	90267–489U8	RIVET, BLIND	1	1	1			
13	90601–200U1	BAND	1	1	1			
14	90467–200A0	CLIP	1	1	1			
15	F1S–U828H–01	TRIM, 1	1	1	1			
16	F1W–U828M–00	BASE, CLAMP	1	1	1			
17	90267–48802	RIVET, BLIND	1	1	1			
18	90464–32801	CLAMP	1	1	1			
19	F1S–U2280–02	DRAIN PLUG ASSY.	2	2	2			
20	F1S–U2285–00	PACKING, DRAIN	2	2	2			
21	9788R–05025	SCREW, PAN HEAD	4	4	4			
22	9299R–05200	WASHER	4	4	4			
23	9572R–05300	NUT, FLANGE	4	4	4			
24	F1W–U8572–01	BRACKET 2	1	1	1			
25	F1K–U826C–03	BRACKET	2	2	2			
26	90267–489U1	RIVET,BLIND	2	2	2			
27	9572R–08300	NUT, FLANGE	4	4	4			

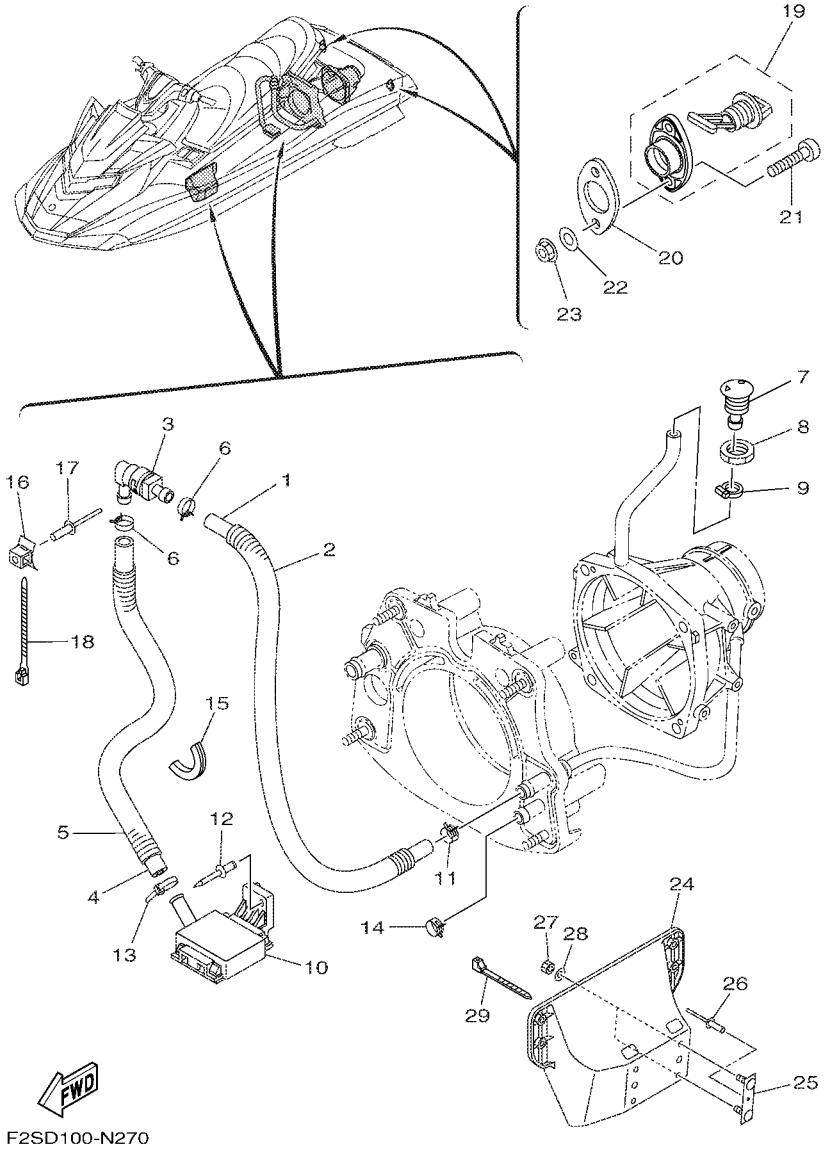

FIG. 27 HULL & DECK

REF. NO.	PART NO.	DESCRIPTION	CAN	EUR	GENE			REMARKS
28	9299R–08200	WASHER	4	4	4			
29	90464–32801	CLAMP	1	1	1			

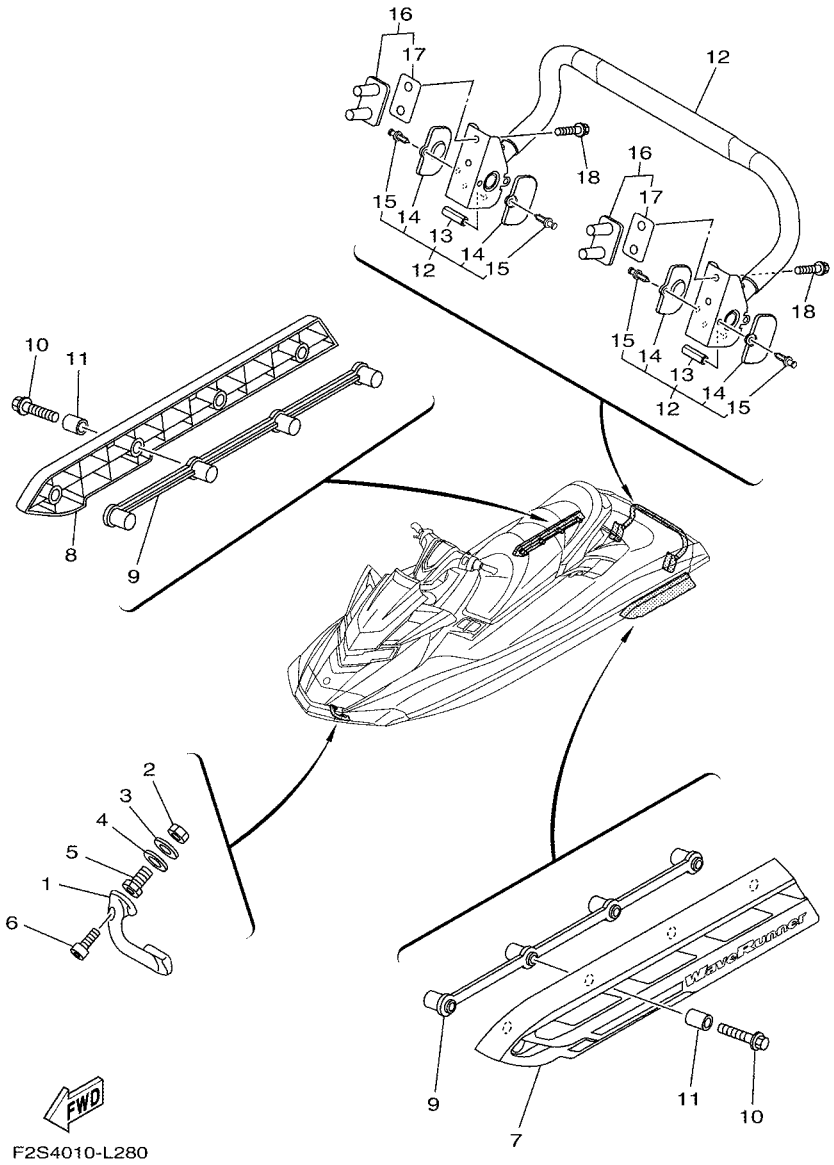

FIG. 28 HULL & DECK 2

REF. NO.	PART NO.	DESCRIPTION	CAN	EUR	GENE			REMARKS
1	F1K–61624–00	BOWEYE 1	1	1	1			
2	99780–12600	NUT.HEX.(COARS)	2	2	2			
3	92990–12200	WASHER, PLAIN	2	2	2			
4	F0X–61637–00	WASHER	2	2	2			
5	F0X–61652–00	NUT (BOLT/NUT)	2	2	2			
6	90110–06040	BOLT, HEXAGON SOCKET HEAD	2	2	2			
7	F2S–U883N–01	STABILIZER LH	1	1	1			
8	F2S–U883P–01	STABILIZER RH	1	1	1			
9	F2S–U883T–00	BRACKET,STABILIZER	2	2	2			
10	90105–08860	BOLT, FLANGE	8	8	8			
11	F2N–U8169–00	SPACER	8	8	8			
12	F2S–U278A–00	LADDER, STEP ASSY	1	1	1			
13	F1W–U771H–00	.SLEEVE 1	2	2	2			
14	F2C–U377H–00	.INNER, COVER SIDE 1	4	4	4			
15	F2C–U1314–00	.PIN	4	4	4			
16	F2S–U278F–00	BRACKET, LADDER LH	2	2	2			
17	F2S–U278H–00	.PACKING, BRKT. 1	2	2	2			
18	90119–08861	BOLT, WITH WASHER	4	4	4			

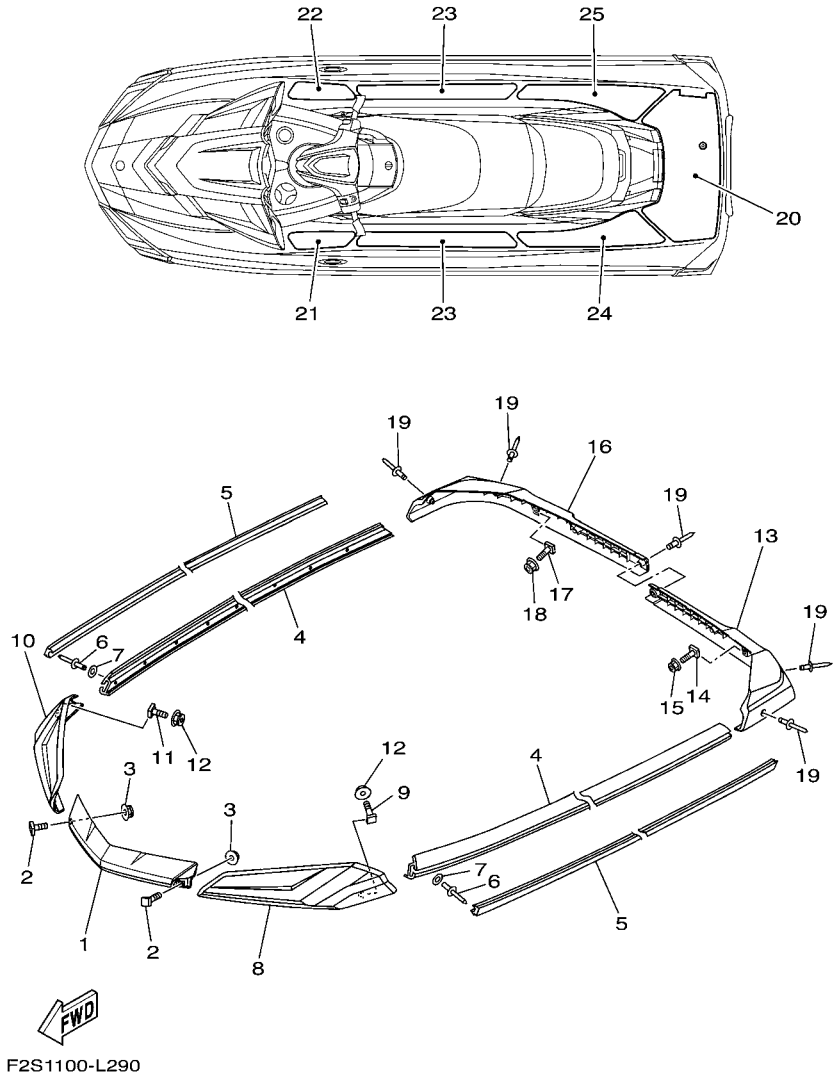

FIG. 29 GUNWALE & MAT

REF. NO.	PART NO.	DESCRIPTION	CAN	EUR	GENE			REMARKS
1	F2S–U2511–20	GUNWALE, BOW	1	1	1			DARK GRAY
2	F1W–U491K–00	BOLT, SPECIAL	4	4	4			
3	F2N–U142L–00	NUT, LOCK	4	4	4			
4	F2S–U2512–20	GUNWALE, SIDE	2	2	2			DARK GRAY
5	F2S–U2519–01	INNER,GUNWALE	2	2	2			YAMAHA BLACK
6	90267–489U8	RIVET, BLIND	30	30	30			
7	9299R–05200	WASHER	30	30	30			
8	F2S–U252E–20	JOINT, GUNWALE LH	1	1	1			DARK GRAY
9	F1W–U491K–00	BOLT, SPECIAL	3	3	3			
10	F2S–U252F–20	JOINT, GUNWALE RH	1	1	1			DARK GRAY
11	F1W–U491K–00	BOLT, SPECIAL	3	3	3			
12	F2N–U142L–00	NUT, LOCK	6	6	6			
13	F2S–U251D–20	GUNWALE, STERN 1 LH	1	1	1			DARK GRAY
14	F1W–U491K–00	BOLT, SPECIAL	1	1	1			
15	F2N–U142L–00	NUT, LOCK	1	1	1			
16	F2S–U251E–20	GUNWALE, STERN 2 RH	1	1	1			DARK GRAY
17	F1W–U491K–00	BOLT, SPECIAL	1	1	1			
18	F2N–U142L–00	NUT, LOCK	1	1	1			
19	90267–48825	RIVET, BLIND	7	7	7			
20	F2S–U3581–01	MAT, UPPER	1	1	1			DARK GRAY & BLACK
21	F2S–U351H–00	MAT, STEP 1	1	1	1			DARK GRAY & BLACK
22	F2S–U351J–00	MAT, STEP 2	1	1	1			DARK GRAY & BLACK
23	F2S–U351K–00	MAT, STEP 3	2	2	2			DARK GRAY & BLACK
24	F2S–U351M–00	MAT, STEP 4	1	1	1			DARK GRAY & BLACK
25	F2S–U351N–00	MAT, STEP 5	1	1	1			DARK GRAY & BLACK

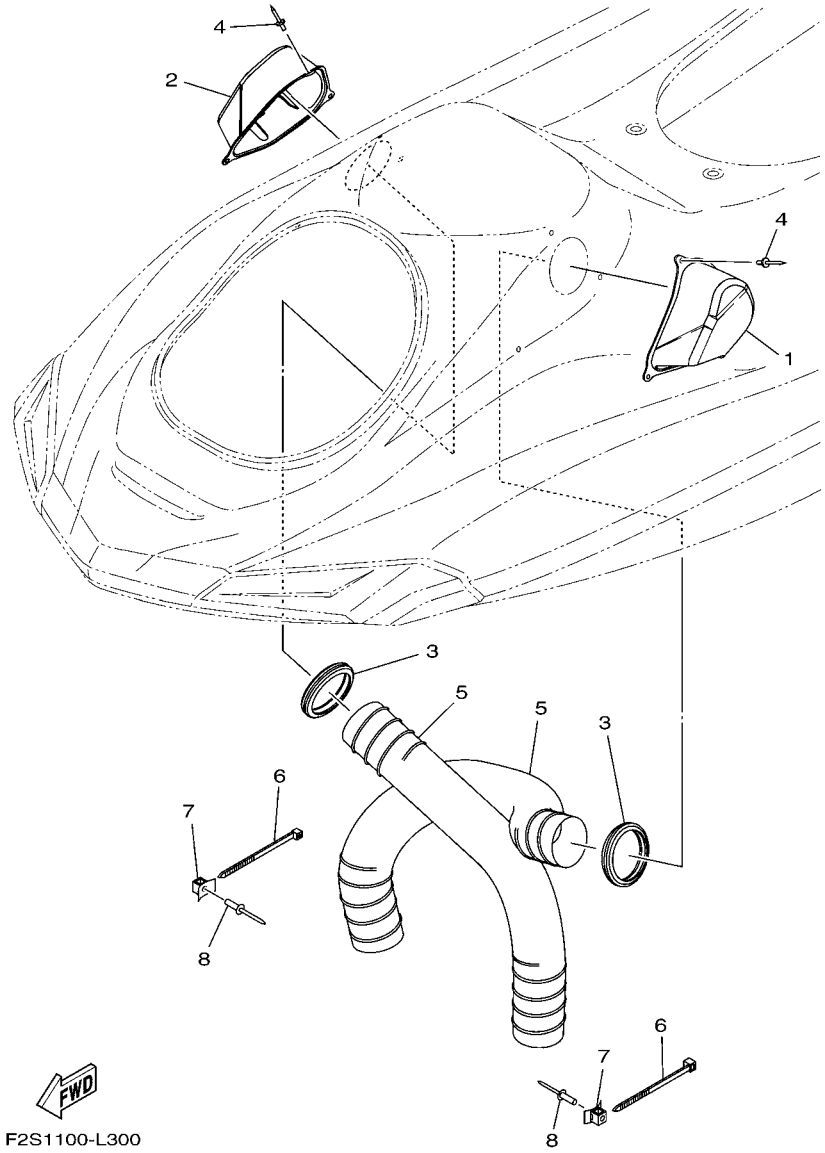

FIG. 30 VENTILATION

REF. NO.	PART NO.	DESCRIPTION	CAN	EUR	GENE			REMARKS
1	F2S–U2187–00	BOX, INDUCTION 1	1	1	1			
2	F2S–U2188–00	BOX, INDUCTION 2	1	1	1			
3	F2N–U2127–00	BASE, AIR INTAKE	2	2	2			
4	90267–48806	RIVET, BLIND	6	6	6			
5	F2N–U213G–01	HOSE, VENTILATOR 2	2	2	2			
6	90464–99804	CLAMP	2	2	2			
7	F1W–U828M–00	BASE, CLAMP	2	2	2			
8	90267–489U6	RIVET, BLIND	2	2	2			

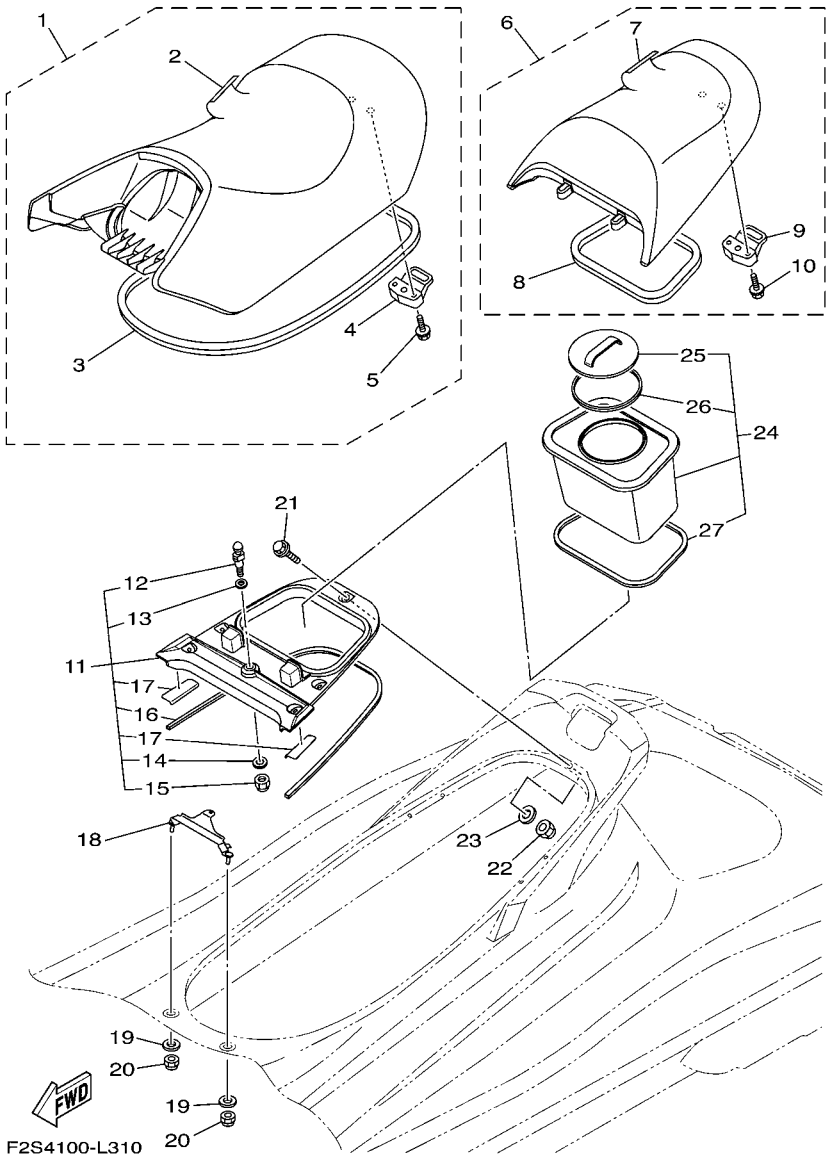

FIG. 31 SEAT & UNDER LOCKER

REF. NO.	PART NO.	DESCRIPTION	CAN	EUR	GENE			REMARKS
1	F2S–U371A–20	DOUBLE SEAT ASSY	1	1	1			
2	F2S–U371B–20	.COVER, SEAT 1	1	1	1			
3	F1W–U2664–01	.PACKING	1	1	1			
4	F2C–U3850–00	.SEAT LOCK ASSY	1	1	1			
5	90119–069UP	.BOLT, WITH WASHER	2	2	2			
6	F2S–U372A–20	SINGLE SEAT ASSY	1	1	1			
7	F2S–U372B–20	.COVER, SEAT	1	1	1			
8	F2C–U266D–01	.PACKING 5	1	1	1			
9	F2C–U3850–00	.SEAT LOCK ASSY	1	1	1			
10	90119–069UP	.BOLT, WITH WASHER	2	2	2			
11	F2S–U890L–04	DECK BEAM ASSY	1	1	1			
12	GH1–U3774–00	.PIN	1	1	1			
13	90201–109U6	.WASHER, PLATE	1	1	1			
14	9299R–10200	.WASHER	1	1	1			
15	9572R–10300	.NUT, NYLON	1	1	1			
16	F2S–U375E–00	.PACKING 1	1	1	1			
17	F2S–U8244–00	.PACKING	2	2	2			
18	F2C–U378C–00	STAY, SEAT 1	1	1	1			
19	90201–099U3	WASHER, PLATE	2	2	2			
20	9572R–08300	NUT, FLANGE	2	2	2			
21	90119–08828	BOLT, WITH WASHER	5	5	5			
22	9572R–08300	NUT, FLANGE	5	5	5			
23	9299R–08200	WASHER	5	5	5			
24	F2C–U591A–02	CASE,ASSY 1	1	1	1			
25	F2C–U591C–00	.CAP,CASE	1	1	1			
26	F2C–U591D–01	.PACKING,CASE	1	1	1			
27	F2C–U266E–00	.PACKING,6	1	1	1			

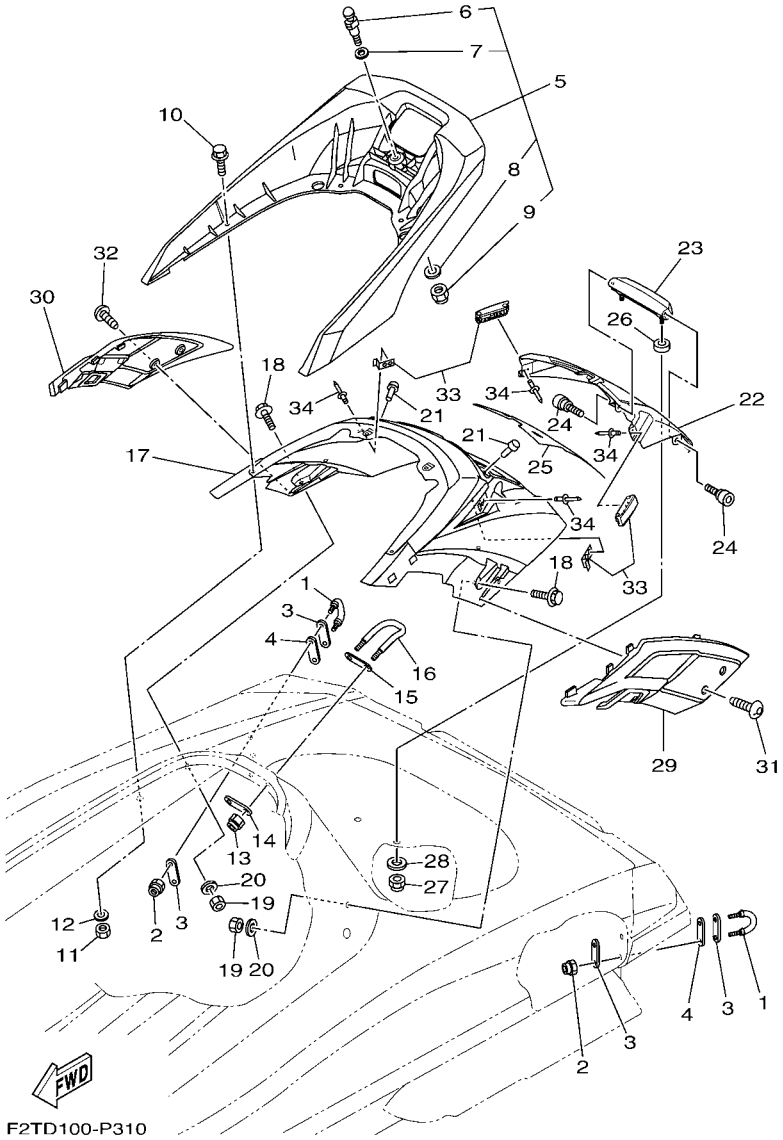

FIG. 32 SEAT & UNDER LOCKER 2

REF. NO.	PART NO.	DESCRIPTION	CAN	EUR	GENE			REMARKS
1	F2N–U1628–02	STERN EYE	2	2	2			
2	9572R–08300	NUT, FLANGE	4	4	4			
3	GP7–U4953–10	PLATE A	4	4	4			
4	F1B–U1653–02	PACKING	2	2	2			
5	F2S–U270B–10	GRIP ASSY	1	1	1			
6	GH1–U3774–00	.PIN	1	1	1			
7	90201–109U6	.WASHER, PLATE	1	1	1			
8	9299R–10200	.WASHER	1	1	1			
9	9572R–10300	.NUT, NYLON	1	1	1			
10	90119–08829	BOLT, WITH WASHER	4	4	4			
11	9572R–08300	NUT, FLANGE	4	4	4			
12	9299R–08200	WASHER	4	4	4			
13	9572R–08300	NUT, FLANGE	2	2	2			
14	GP7–U4953–10	PLATE A	1	1	1			
15	GP7–U4953–10	PLATE A	1	1	1			
16	F1B–U1629–00	SKI TOWS	1	1	1			
17	F2S–U89A1–01–P1	STORAGE, STERN (DNMC)	1	1	1			
18	90119–08832	BOLT, WITH WASHER	2	2	2			
19	9572R–08300	NUT, FLANGE	2	2	2			
20	9299R–08200	WASHER	2	2	2			
21	F1W–U3768–01	CUSHION, RUBBER	2	2	2			
22	F2S–U518M–01–P1	LID LOCKER STERN (DNMC)	1	1	1			
23	F2S–U271F–01	GRIP, LOWER	1	1	1			
24	F2S–U2624–00	BOLT	2	2	2			
25	F2S–U519D–20	PACKING CASE	1	1	1			
26	F2S–U2284–00	PACKING	2	2	2			
27	9572R–08300	NUT, FLANGE	2	2	2			

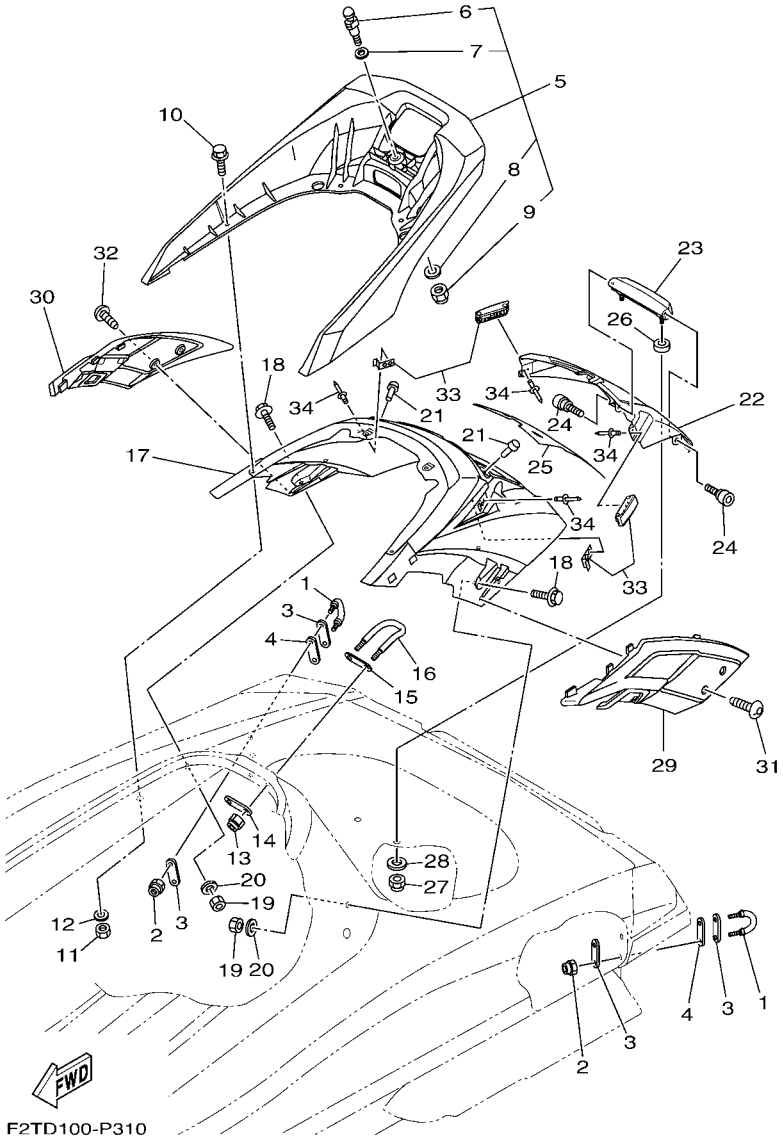

FIG. 32 SEAT & UNDER LOCKER 2

REF. NO.	PART NO.	DESCRIPTION	CAN	EUR	GENE			REMARKS
28	9299R–08200	WASHER	2	2	2			
29	F2S–U890M–11	STERN COVER ASSY 1	1	1	1			
30	F2S–U890N–11	STERN COVER ASSY 2	1	1	1			
31	F2S–U13C1–00	SCREW	2	2	2			
32	F2S–U13C1–00	SCREW	2	2	2			
33	F2S–U264L–01	LOCK 1 (WITH HOOK)	2	2	2			
34	90267–409U3	RIVET, BLIND	8	8	8			

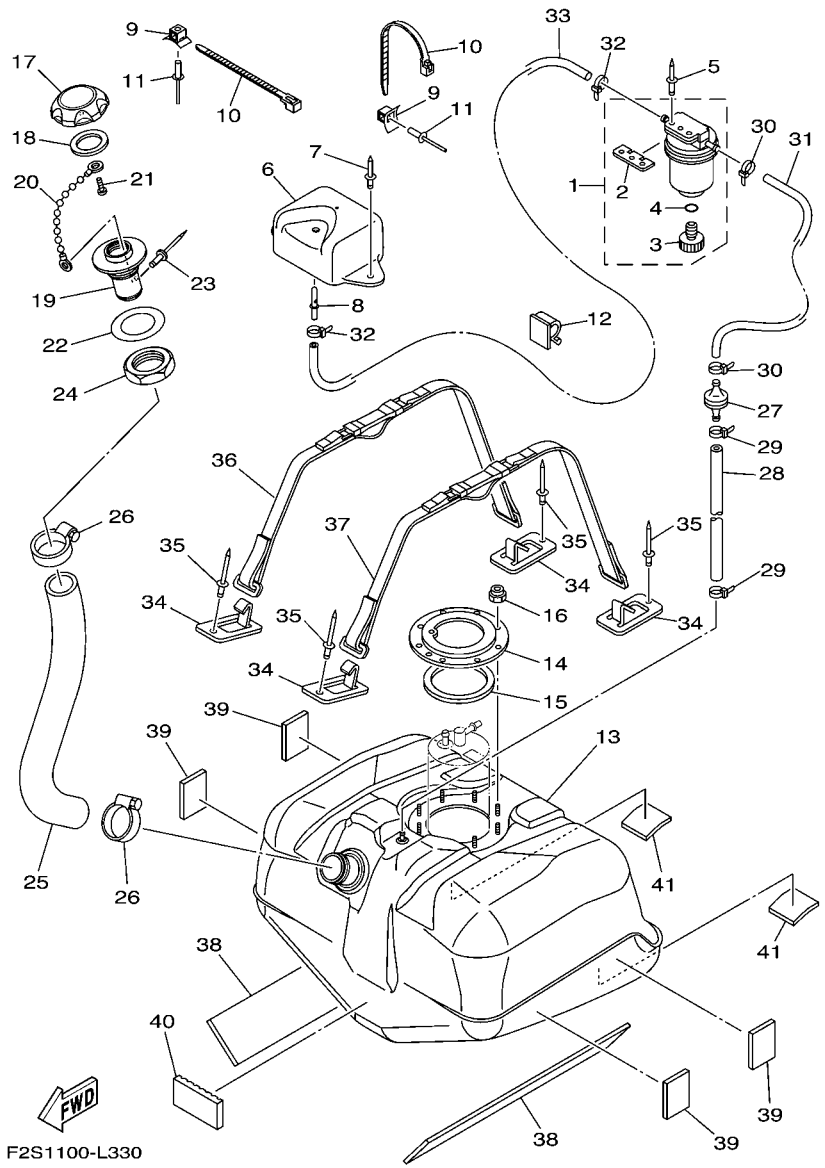

FIG. 33 FUEL TANK

REF. NO.	PART NO.	DESCRIPTION	CAN	EUR	GENE			REMARKS
1	F2F–6214A–00	FILTER, VENT ASSY	1	1	1			
2	EW2–62142–00	.PLATE, FILTER	1	1	1			
3	70R–24543–00	.PLUG, DRAIN	1	1	1			
4	70R–24489–00	.O-RING	1	1	1			
5	90267–489U2	RIVET, BLIND	2	2	2			
6	F1W–U2159–00	SOCKET, VENTILATION	1	1	1			
7	90267–489U6	RIVET, BLIND	2	2	2			
8	F1G–62149–00	PIPE, VENTILATION	1	1	1			
9	F1W–U828M–00	BASE, CLAMP	2	2	2			
10	90464–32801	CLAMP	2	2	2			
11	90267–489U6	RIVET, BLIND	2	2	2			
12	90464–17800	CLAMP	1	1	1			
13	F2S–U7711–02	TANK, FUEL	1	1	1			
14	F1B–U7773–00	RING	1	1	1			
15	F1B–67747–00	PACKING, SEAL	1	1	1			
16	9572R–06300	NUT, NYLON	9	9	9			
17	F2N–U7831–10	CAP, FUEL FILLER	1	1	1			BLACK
18	GP7–U7832–01	PACKING	1	1	1			
19	GP7–U7833–11	SOCKET	1	1	1			BLACK
20	GP7–U7835–00	CHAIN BALL	1	1	1			
21	90169–049U1	TAPPING SCREW	1	1	1			
22	GP7–U7834–10	PACKING FUEL FILLER	1	1	1			
23	90267–329UR	RIVET, BLIND	1	1	1			
24	GP7–U783F–00	NUT, FUEL FILLER	1	1	1			
25	F2S–U7844–00	HOSE	1	1	1			
26	90601–155U4	BAND, HOSE 55	2	2	2			
27	EU0–67767–31	CHECK VALVE	1	1	1			

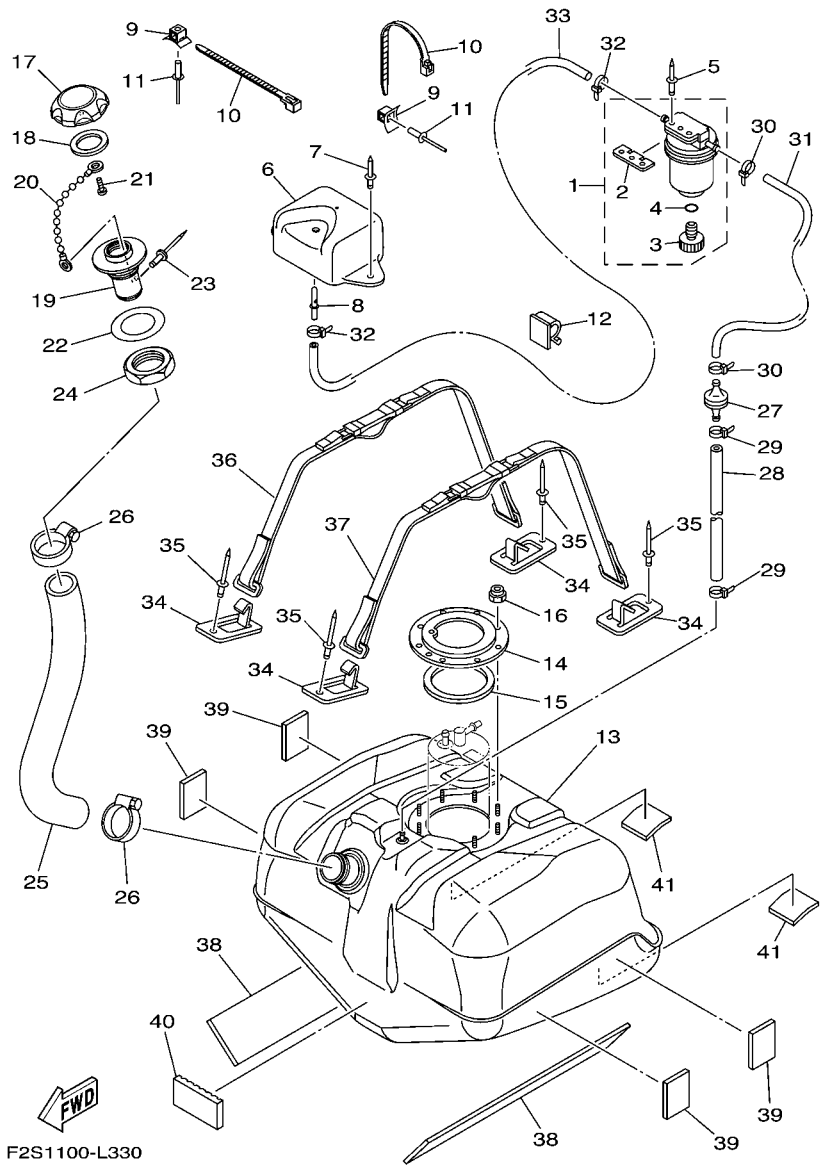

FIG. 33 FUEL TANK

REF. NO.	PART NO.	DESCRIPTION	CAN	EUR	GENE			REMARKS
28	F2H–U785H–00	HOSE, AIR VENT 3	1	1	1			
29	90465–11829	CLAMP	2	2	2			
30	90465–11829	CLAMP	2	2	2			
31	F0D–U785G–10	HOSE, AIR VENT	1	1	1			
32	90465–11829	CLAMP	2	2	2			
33	F0D–U7856–10	HOSE, AIR VENT 3	1	1	1			
34	F1K–U5772–04	HOOK A	4	4	4			
35	90267–489U1	RIVET,BLIND	4	4	4			
36	F2S–67743–00	BELT, TANK 1	1	1	1			
37	F2S–67743–00	BELT, TANK 1	1	1	1			
38	F2S–U759B–00	MAT 1	2	2	2			
39	F1W–U759C–01	MAT 2	4	4	4			
40	F1K–U759C–00	MAT 2	1	1	1			
41	F1K–U759C–00	MAT 2	2	2	2			

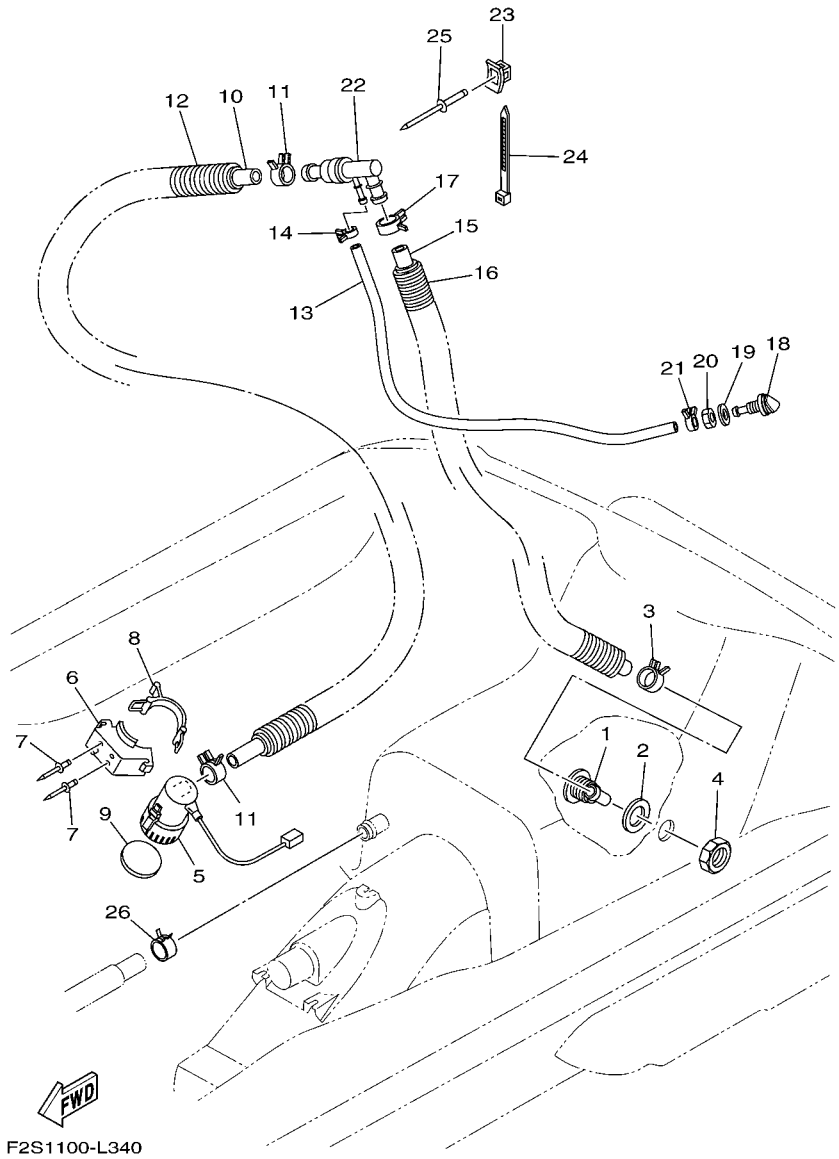

FIG. 34 BILGE PUMP

REF. NO.	PART NO.	DESCRIPTION	CAN	EUR	GENE			REMARKS
1	F1W–U224E–00	BODY, DRAIN 3	1	1	1			
2	F1S–U7525–01	PACKING	1	1	1			
3	90467–26800	CLIP	1	1	1			
4	F1B–62241–00	DRAIN, COCKPIT	1	1	1			
5	F1B–U8360–01	BILGE PUMP ASSY	1	1	1			
6	F1B–U7698–01	BRACKET	1	1	1			
7	F3J–U516R–00	RIVET 1	2	2	2			
8	GA7–68218–00	BAND, BATTERY	1	1	1			
9	F1B–U7656–00	PACKING, BILGE	1	1	1			
10	F1B–U7626–00	HOSE 1	1	1	1			
11	90467–25801	CLIP	2	2	2			
12	90447–28004	HOSE, WITH SPRING (L800)	1	1	1			
13	F3J–U7629–00	HOSE, DRAIN 2	1	1	1			
14	90467–14803	CLIP	1	1	1			
15	F1B–U7628–00	HOSE, DRAIN 3	1	1	1			
16	90447–28004	HOSE, WITH SPRING (L800)	1	1	1			
17	90467–26800	CLIP	1	1	1			
18	GH7–6753B–00	PILOT,WATER	1	1	1			
19	90430–16910	GASKET	1	1	1			
20	GP7–61652–00	NUT	1	1	1			
21	90467–14803	CLIP	1	1	1			
22	F1S–67620–00	HOSE JOINT	1	1	1			
23	F1W–U828M–00	BASE, CLAMP	1	1	1			
24	F2C–U4256–00	CLAMP	1	1	1			
25	90267–489U6	RIVET, BLIND	1	1	1			
26	90467–26800	CLIP	1	1	1			

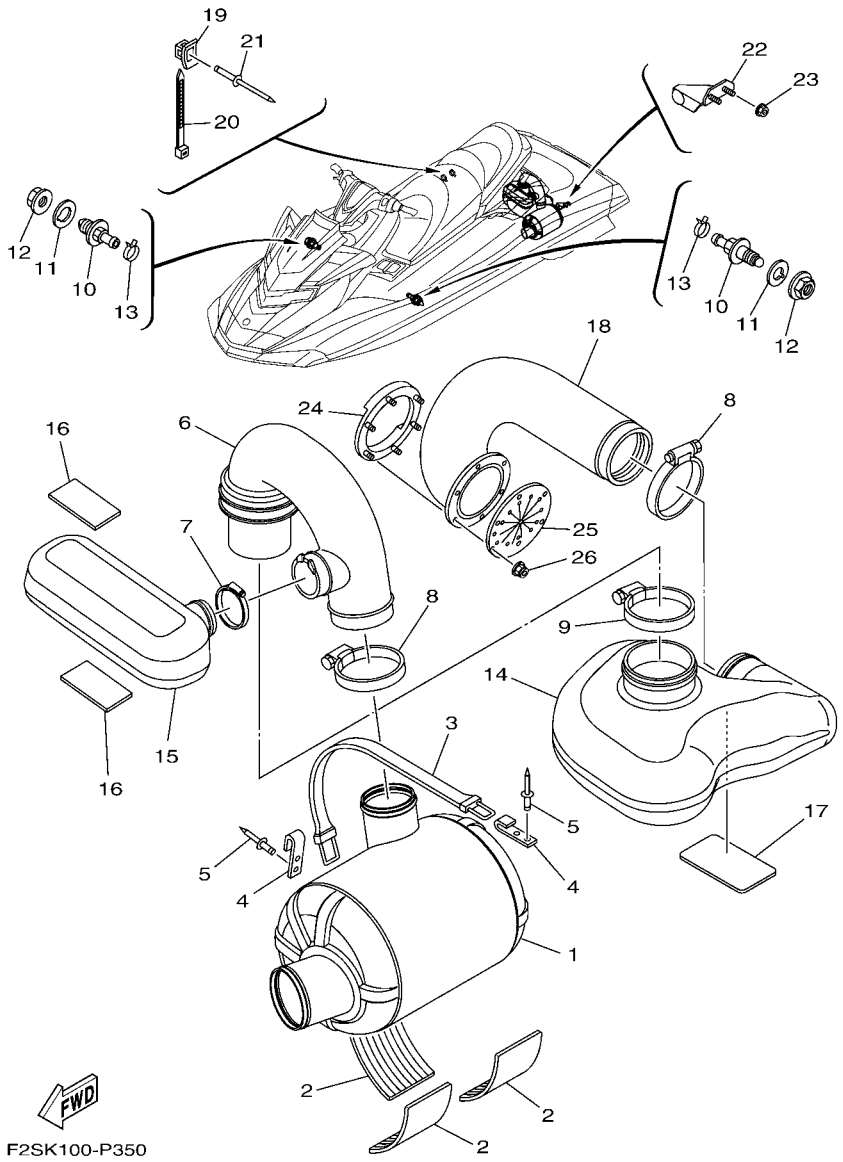

FIG. 35 EXHAUST 3

REF. NO.	PART NO.	DESCRIPTION	CAN	EUR	GENE			REMARKS
1	F1W–U7550–02	WATER LOCK COMP.	1	1	1			
2	F1S–U8221–00	PAD, BATTERY	3	3	3			
3	EW2–67821–00	BAND, FUEL TANK	1	1	1			
4	GA7–65772–00	HOOK A	2	2	2			
5	90267–489U1	RIVET,BLIND	4	4	4			
6	F2S–U7555–01	HOSE, EXHAUST	1	1	1			
7	90601–170UG	BAND, HOSE 70	1	1	1			
8	90450–99801	HOSE CLAMP ASSY	2	2	2			
9	90450–99804	HOSE CLAMP ASSY	1	1	1			
10	F2C–U753B–01	PILOT, WATER	2	2	2			
11	F2C–U7564–00	GASKET	2	2	2			
12	F2C–U2733–00	NUT	2	2	2			
13	90467–17802	CLIP	2	2	2			
14	F2N–U4261–00	TANK, WATER	1	1	1			
15	F2S–U753C–00	RESONATOR 1	1	1	1			
16	F1K–U759C–00	MAT 2	2	2	2			
17	F1S–U8221–00	PAD, BATTERY	1	1	1			
18	F2N–U758D–00	HOSE,EXHAUST 3	1	1	1			
19	F1W–U828M–00	BASE, CLAMP	1	1	1			
20	90464–32801	CLAMP	1	1	1			
21	90267–489U6	RIVET, BLIND	1	1	1			
22	F2C–U755G–00	BRKT., WATER LOCK	1	1	1			
23	F2N–U142L–00	NUT, LOCK	2	2	2			
24	F1S–U757B–01	PLATE	1	1	1			
25	F1B–U751G–00	VALVE, EXHAUST	1	1	1			
26	F2N–U142L–00	NUT, LOCK	6	6	6			

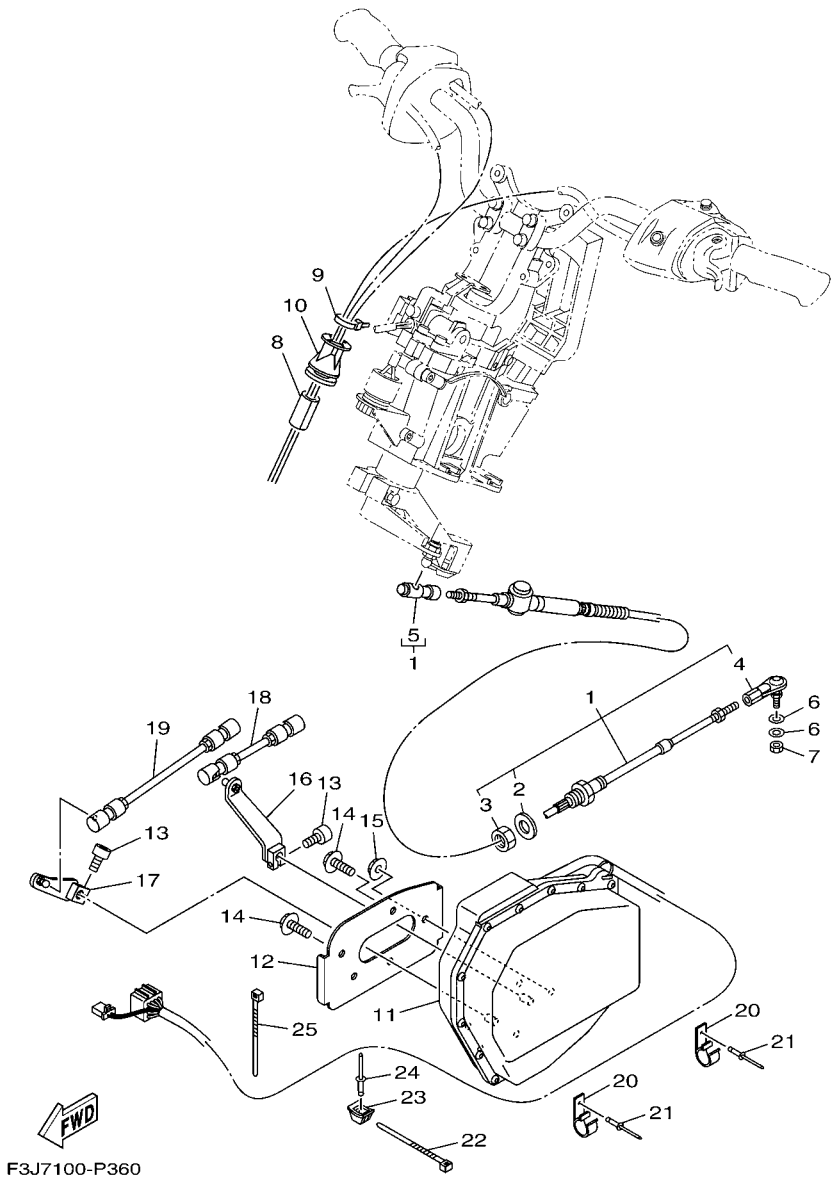

FIG. 36 CONTROL CABLE

REF. NO.	PART NO.	DESCRIPTION	CAN	EUR	GENE			REMARKS
1	F1S–61481–10	CABLE, STEERING	1	1	1			
2	F1B–61438–00	.PACKING C	1	1	1			
3	F1B–6151S–00	.NUT	1	1	1			
4	F1B–61461–02	.STUD, JOINT BALL	1	1	1			
5	F2N–61460–00	.BALL JOINT ASSY	1	1	1			
6	90201–06906	WASHER, PLATE	2	2	2			
7	9538R–06700	NUT	1	1	1			
8	GJ1–U7578–21	PACKING, HOSE 2	1	1	1			
9	90464–32801	CLAMP	1	1	1			
10	F3J–U822E–00	GROMMET	1	1	1			
11	F3J–6140B–00	MOTOR ASSY.	1	1	1			
12	F3J–U8285–00	PLATE	1	1	1			
13	90110–06040	BOLT, HEXAGON SOCKET HEAD	2	2	2			
14	90119–08851	BOLT, WITH WASHER	2	2	2			
15	9572R–08300	NUT, FLANGE	3	3	3			
16	F3J–6150E–00	TRIM ARM ASSY	1	1	1			
17	F3J–6150F–00	SHIFT ARM ASSY	1	1	1			
18	F3J–6150A–00	ROD ASSY	1	1	1			
19	F3J–6150D–00	ROD ASSY 2	1	1	1			
20	F3J–U8368–00	CLAMP	2	2	2			
21	90267–409U5	RIVET, BLIND	2	2	2			
22	90464–32801	CLAMP	1	1	1			
23	F1W–U828M–00	BASE, CLAMP	1	1	1			
24	90267–48802	RIVET, BLIND	1	1	1			
25	90464–32801	CLAMP	1	1	1			

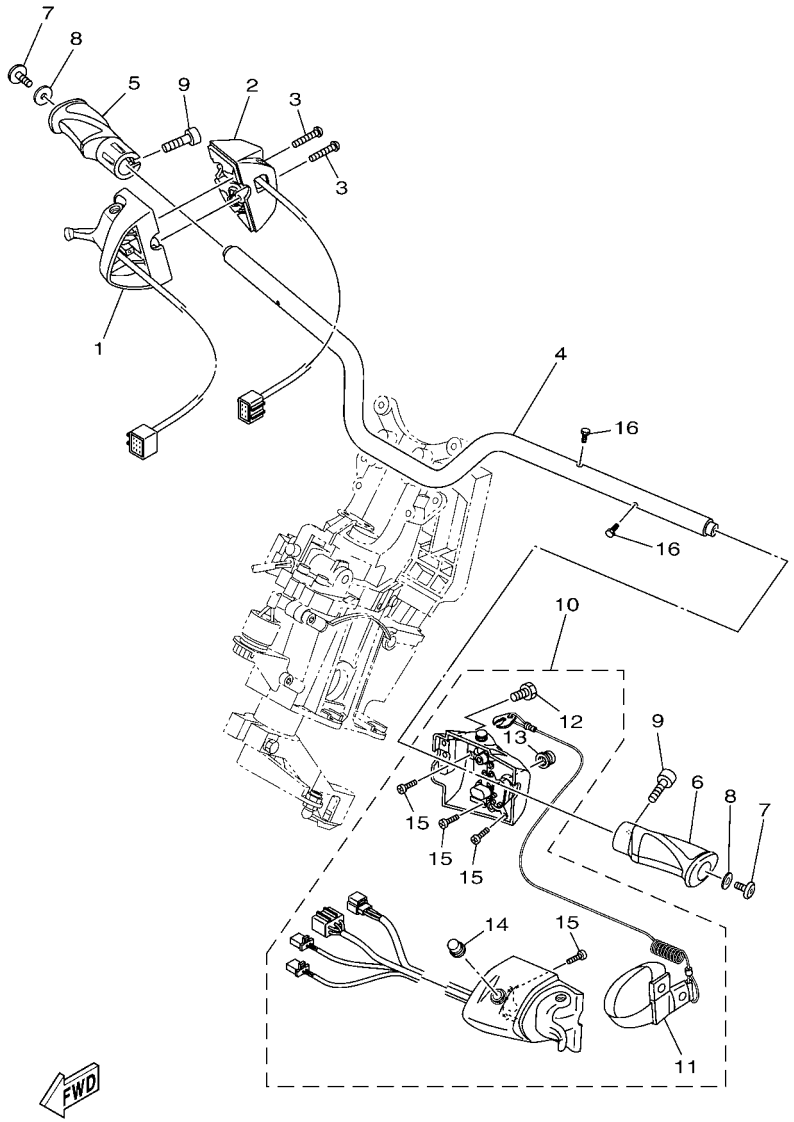

F3J7100-P370

FIG. 37 STEERING 1

REF. NO.	PART NO.	DESCRIPTION	CAN	EUR	GENE			REMARKS
1	6CS–14305–10	THROTTLE LEVER COMP	1	1	1			
2	6CS–81860–00	SWITCH ASSY	1	1	1			
3	6CS–6725F–00	BOLT, THROTTLE	2	2	2			
4	F3J–U1552–00	HANDLE	1	1	1			
5	F2S–U155D–02	GRIP, HANDLE	1	1	1			
6	F2S–U155D–02	GRIP, HANDLE	1	1	1			
7	90110–06382	BOLT, HEXAGON SOCKET HEAD	2	2	2			
8	90201–068G0	WASHER, PLATE	2	2	2			
9	F2S–U1516–00	BOLT	2	2	2			
10	F3J–68310–00	SWITCH BOX ASSY	1	1	1			
11	EW2–68348–00	.LANYARD, STOP SWITCH	1	1	1			
12	6CS–6725F–00	.BOLT, THROTTLE	4	4	4			
13	FK7–68312–02	.STOP BUTTON COMP	1	1	1			
14	FK7–68313–02	.START BUTTON COMP.	1	1	1			
15	97780–30610	.SCREW, TAPPING	8	8	8			
16	91380–04030	BOLT	2	2	2			

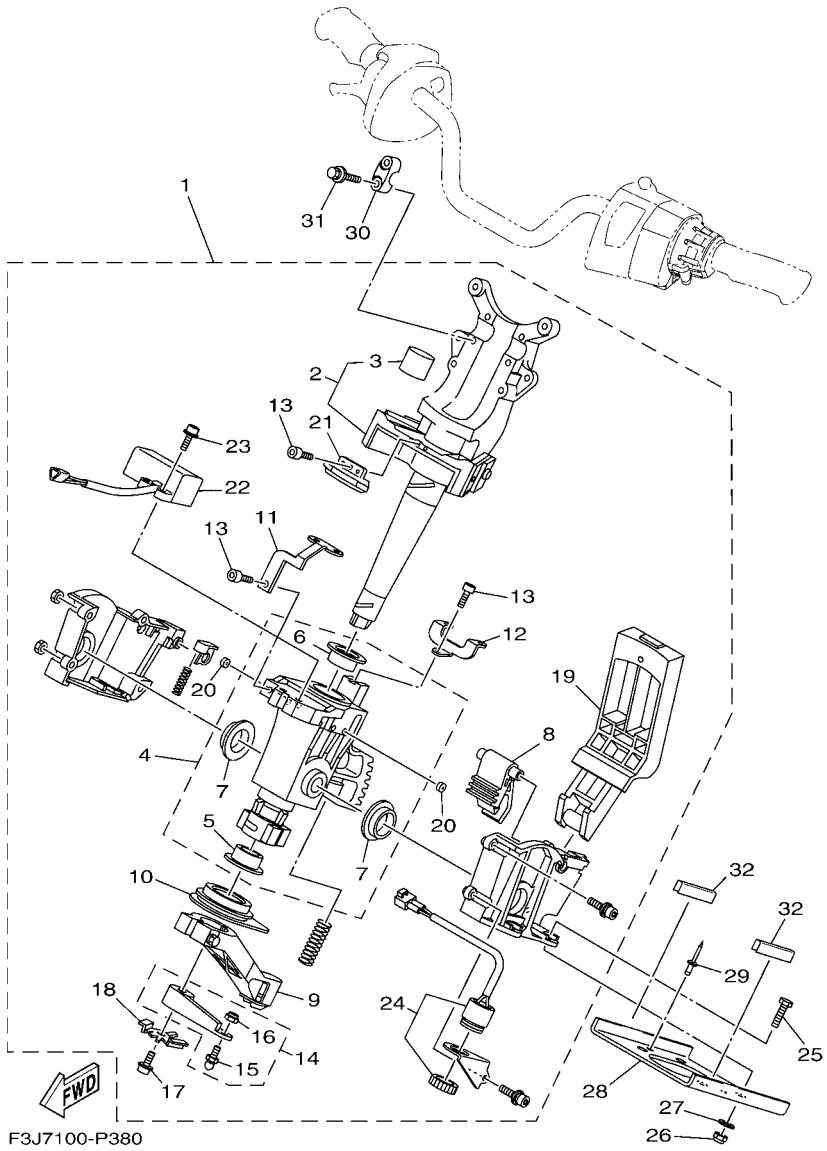

FIG. 38 STEERING 2

REF. NO.	PART NO.	DESCRIPTION	CAN	EUR	GENE			REMARKS
1	F3J–61400–00	STEERING MASTER ASSY	1	1	1			
2	F3J–67410–00	.SHAFT ASSY	1	1	1			
3	F1W–61435–00	..SEAL, PIPE 30	1	1	1			
4	F1W–6773D–00	.TUBE & BUSHING SET	1	1	1			
5	F1S–6134M–00	..BUSH	1	1	1			
6	F2C–6134M–00	..BUSH	1	1	1			
7	F1S–6134M–10	..BUSH	2	2	2			
8	F1S–61782–00	.LOCK 1	1	1	1			
9	F1S–6146A–00	.CABLE STOPPER ASSY.	1	1	1			
10	F1S–6143C–00	.SEAL, RUBBER	1	1	1			
11	F3J–65938–00	.STAY 1	1	1	1			
12	F3J–65939–00	.STAY 2	1	1	1			
13	F1B–613C1–00	.SCREW	3	3	3			
14	F1S–6153R–01	.ARM ASSY.	1	1	1			
15	EU0–61461–02	..STUD, JOINT BALL	1	1	1			
16	95720–06300	..NUT, SELF-LOCKING	1	1	1			
17	F1W–61355–00	.BOLT	1	1	1			
18	F1W–6142B–00	.PLATE, RETAINING	1	1	1			
19	F2S–6151M–00	.LEVER ASSY	1	1	1			
20	F1W–6358B–00	.PLUG	4	4	4			
21	F3J–6838C–00	.MAGNET	1	1	1			
22	F3J–6838B–00	.SENSOR, MAGNET	1	1	1			
23	F1W–61516–00	.BOLT	9	9	9			
24	F1S–68341–00	.BUZZER	1	1	1			
25	97080–08035	BOLT	4	4	4			
26	9572R–08300	NUT, FLANGE	4	4	4			
27	F1W–U725E–00	WASHER	4	4	4			

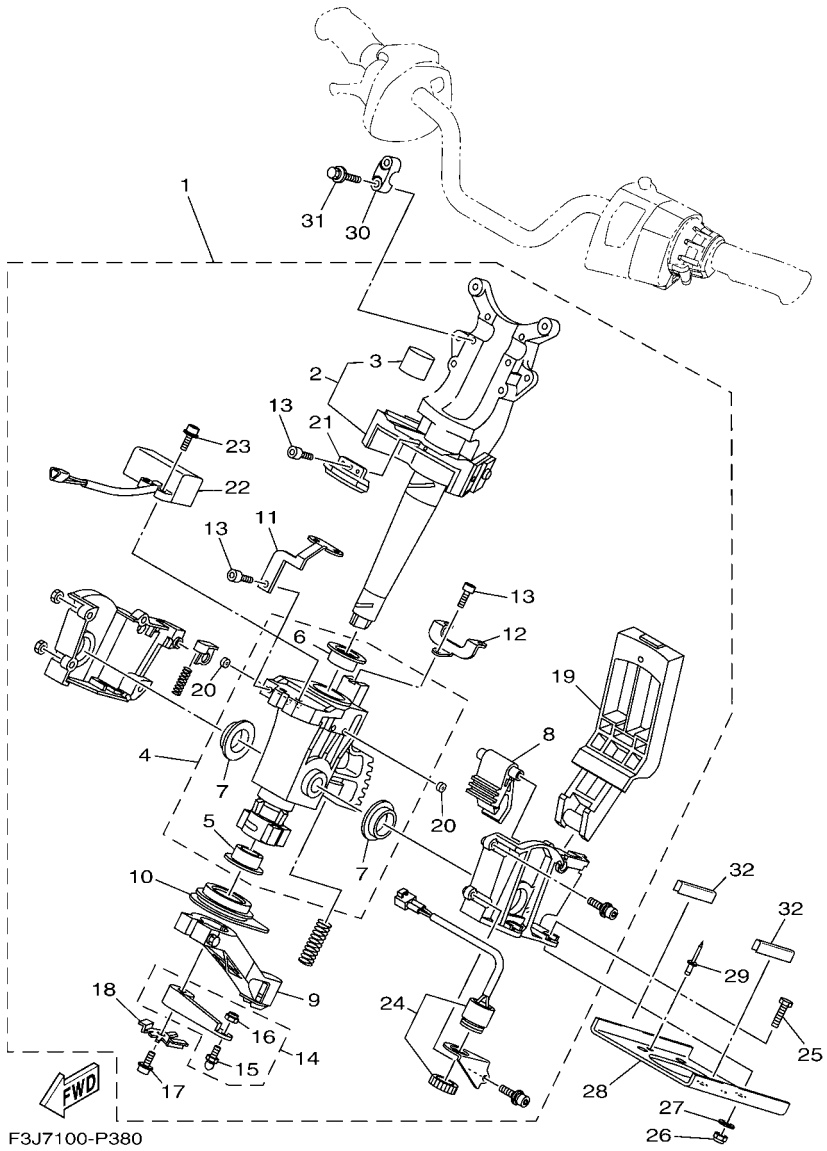

FIG. 38 STEERING 2

REF. NO.	PART NO.	DESCRIPTION	CAN	EUR	GENE			REMARKS
28	F1X–U1554–00	PLATE, RETAINING	1	1	1			
29	90267–489U6	RIVET, BLIND	2	2	2			
30	EU0–23814–31	HOLDER, HANDLE UPPER	2	2	2			
31	90119–089UU	BOLT, WITH WASHER	4	4	4			
32	F2S–U5162–00	TRIM	2	2	2			

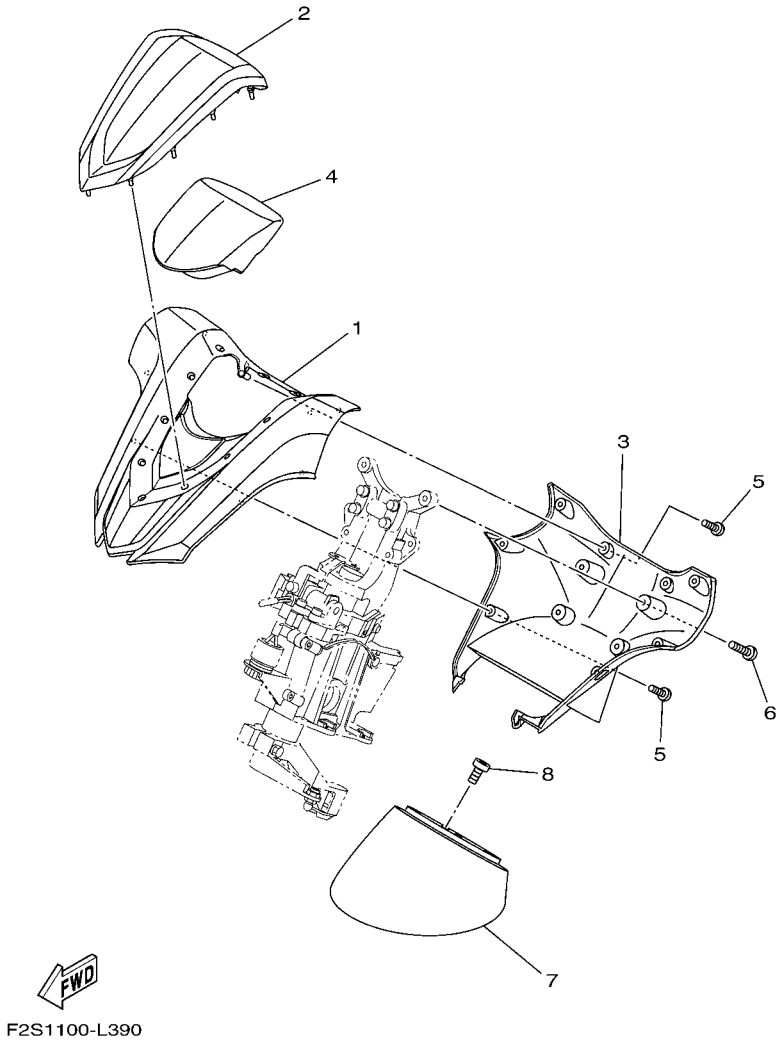

FIG. 39 STEERING 3

REF. NO.	PART NO.	DESCRIPTION	CAN	EUR	GENE			REMARKS
1	F2S–U143D–10	PAD, STEERING 1	1	1	1			
2	F2S–U142D–10	COVER, PAD	1	1	1			
3	F2S–U143E–10	PAD, STEERING 2	1	1	1			
4	F2S–U142E–00	CUSHION, PAD 1	1	1	1			
5	F2S–U13C1–00	SCREW	8	8	8			
6	90154–06017	SCREW, BINDING	4	4	4			
7	F2S–U143L–01	PAD, STEERING 3	1	1	1			
8	90154–06030	SCREW, BINDING	4	4	4			

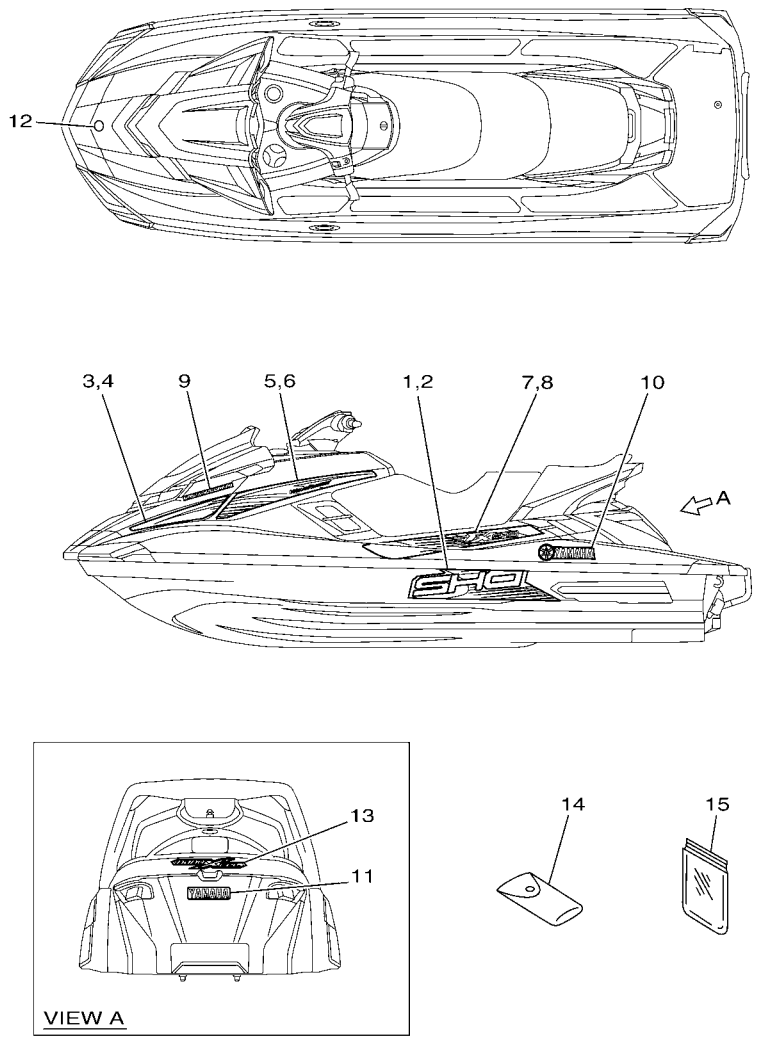

F2SN100-P400

FIG. 40 GRAPHICS

REF. NO.	PART NO.	DESCRIPTION	CAN	EUR	GENE			REMARKS
1	F2S–U417B–B0	GRAPHIC 1 (LH)	1	1	1			
2	F2S–U417C–B0	GRAPHIC 2 (RH)	1	1	1			
3	F2S–U417D–B0	GRAPHIC 3 (LH)	1	1	1			
4	F2S–U417E–B0	GRAPHIC 4 (RH)	1	1	1			
5	F2S–U417F–B0	GRAPHIC 5 (LH)	1	1	1			
6	F2S–U417G–B0	GRAPHIC 6 (RH)	1	1	1			
7	F2S–U417H–B0	GRAPHIC 7 (LH)	1	1	1			
8	F2S–U417J–B0	GRAPHIC 8 (RH)	1	1	1			
9	F3K–U417M–20	GRAPHIC C	2	2	2			
10	F2S–U4116–00	MARK, YAMAHA 3	2	2	2			
11	F2P–U4114–10	MARK, YAMAHA A	1	1	1			
12	F2S–6411H–00	EMBLEM, TUNING FORK	1	1	1			
13	F1W–U4121–00	EMBLEM A	1	1	1			
14	F1B–65986–13	TOOL SET	1	1	1			
15	EU0–65901–02	TOOL BAG	1	1	1			

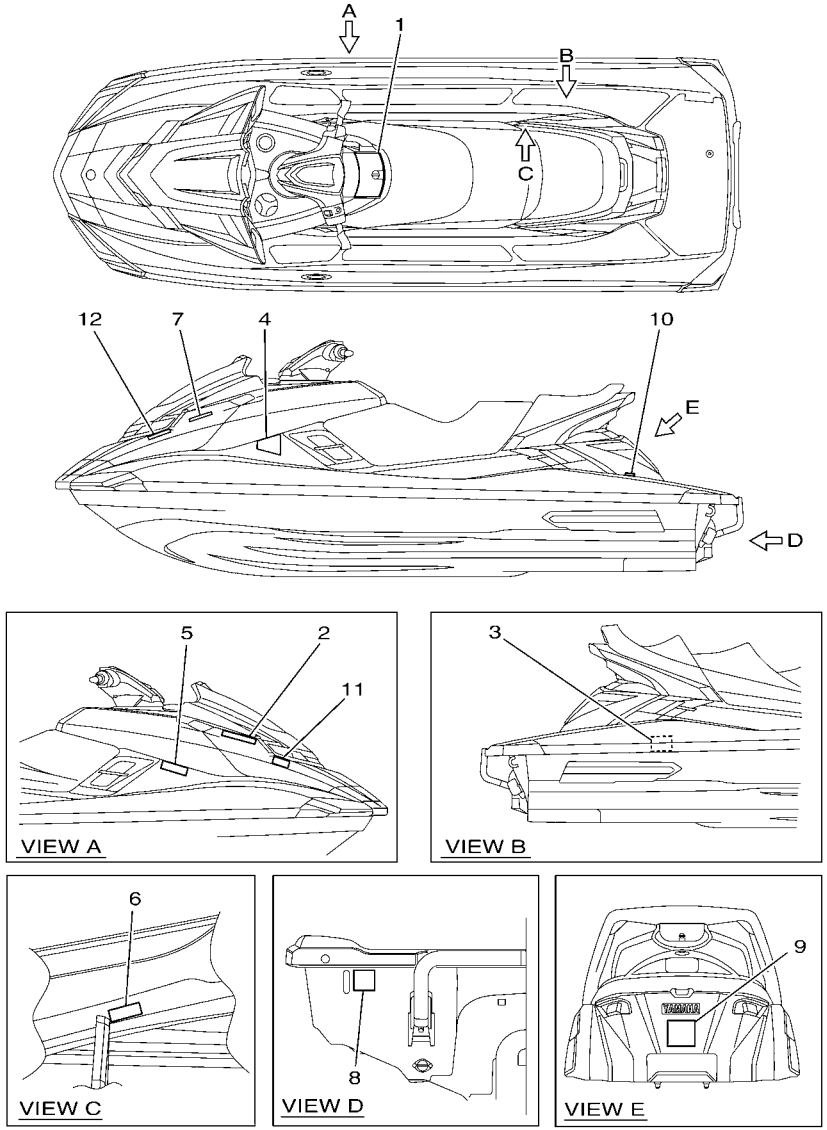

F2TF100-P400

FIG. 41 IMPORTANT LABELS

REF. NO.	PART NO.	DESCRIPTION	CAN	EUR	GENE			REMARKS
1	F2S–U41B1–10	LABEL, WARNING UNIFORM 1	1	1	1			
2	F1B–U41B1–21	LABEL, WARNING UNIFORM 1	1	1	1			
3	F1B–U41B1–31	LABEL, WARNING UNIFORM 1	1	1	1			
4	F1B–U41B2–01	LABEL, WARNING UNIFORM 2	1	1	1			
5	F1S–U415B–11	LABEL, WARNING(FUEL)	1	1	1			
6	F0V–U41DB–12	LABEL, WARNING BATTERY	1	1	1			
7	F1B–U41F5–21	LABEL, FIRE EXTINGUISHER 1	1	1	1			
8	F1G–U418F–00	LABEL, RIGHTING	1	1	1			
9	F1S–U41E1–11	LABEL, SET 1	1	1	1			
10	F1S–U419E–01	LABEL 4	1					FOR CAN
11	F1X–U413P–02	LABEL, BUILDERS PLATE		1				FOR EUR
12	GP8–U416H–01	LABEL,WARNING(FRANCE)		1				FOR EUR

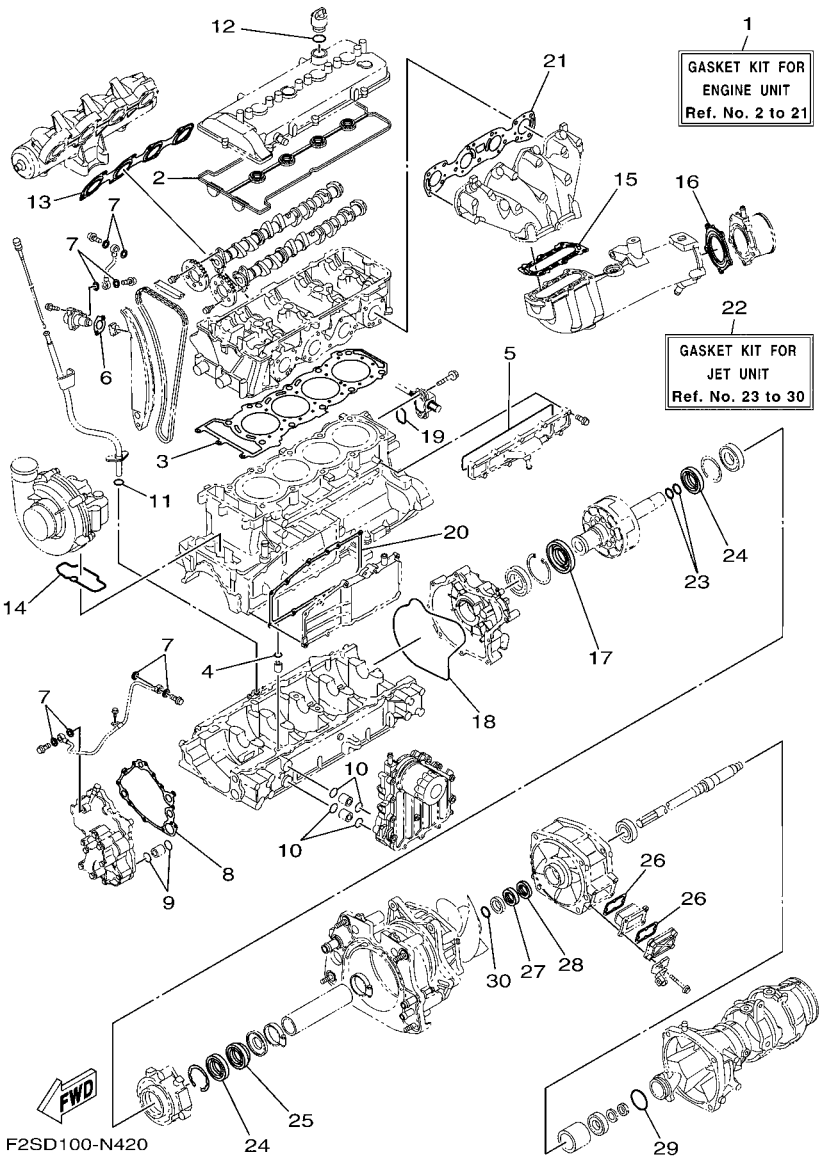

FIG. 42 REPAIR KIT 1

REF. NO.	PART NO.	DESCRIPTION	CAN	EUR	GENE			REMARKS
1	6CS–W0001–01	GASKET KIT FOR ENGINE UNIT	1	1	1			
2	6BH–11193–00	.GASKET, HEAD COVER 1	1	1	1			
3	6BH–11181–00	.GASKET, CYLINDER HEAD 1	1	1	1			
4	93210–11453	.O-RING	1	1	1			
5	6CS–12517–00	.GASKET, WATER INLET	1	1	1			
6	6S5–121E2–00	.GASKET	1	1	1			
7	90430–10007	.GASKET	8	8	8			
8	6S5–13563–00	.GASKET	1	1	1			
9	93210–21631	.O-RING	2	2	2			
10	93210–18322	.O-RING	4	4	4			
11	93210–12016	.O-RING	1	1	1			
12	93210–24M79	.O-RING	1	1	1			
13	6BH–13645–00	.GASKET, MANIFOLD 1	1	1	1			
14	6S5–1416A–00	.O-RING	1	1	1			
15	6S5–14739–00	.GASKET, MUFFLER DAMPER 1	1	1	1			
16	6BH–14749–00	.GASKET, MUFFLER DAMPER 2	1	1	1			
17	6S5–81167–10	.OIL SEAL	1	1	1			
18	6S5–81168–00	.O-RING	1	1	1			
19	93210–32172	.O-RING	1	1	1			
20	6BH–13557–00	.GASKET	1	1	1			
21	6S5–14613–00	.GASKET, EXHAUST PIPE	1	1	1			
22	6S5–W0001–22	GASKET KIT FOR JET UNIT	1	1	1			
23	93210–22MF1	.O-RING	2	2	2			
24	93102–29008	.OIL SEAL	2	2	2			
25	93102–29009	.OIL SEAL	1	1	1			
26	66V–42414–00	.O-RING	2	2	2			
27	93102–31009	.OIL SEAL	1	1	1			

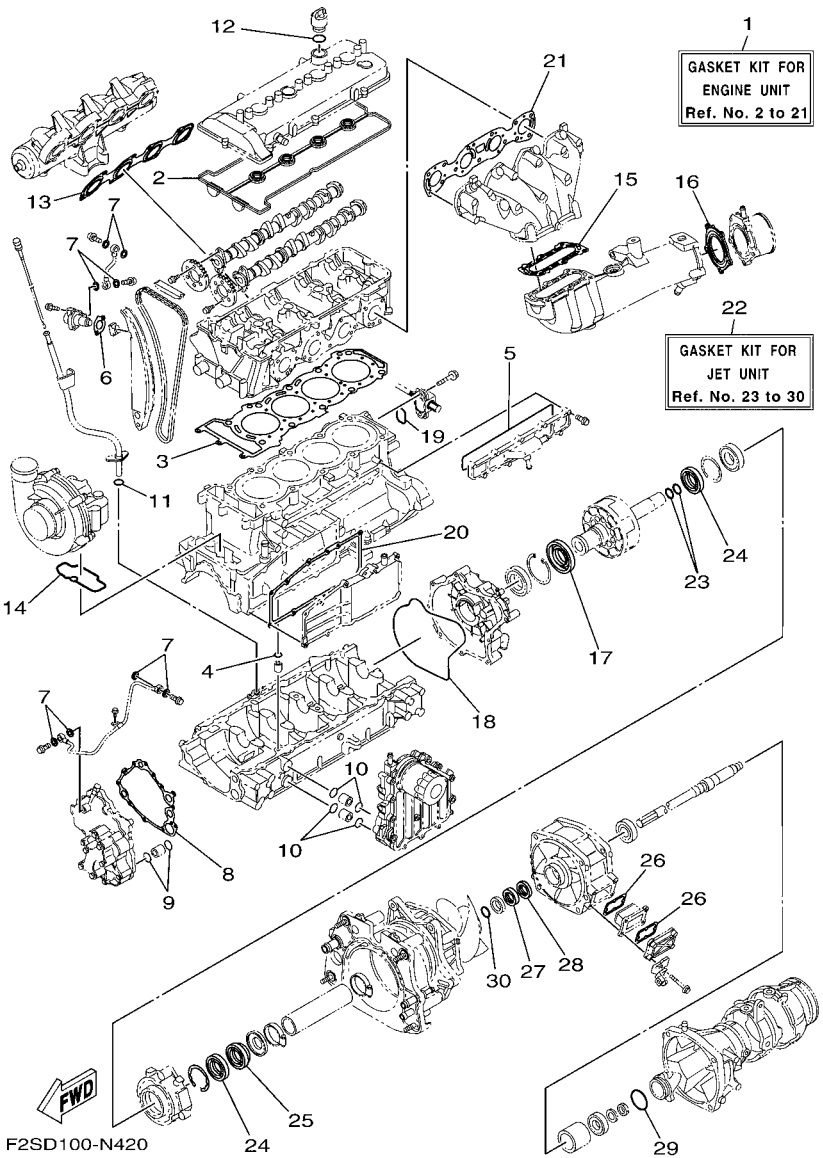

FIG. 42 REPAIR KIT 1

REF. NO.	PART NO.	DESCRIPTION	CAN	EUR	GENE			REMARKS
28	93101–31001	.OIL SEAL	1	1	1			
29	6S5–5111K–00	.O-RING 1	1	1	1			
30	93210–30611	.O-RING	1	1	1			

PART NO.	REF. NO.
6S5–11102–11	2 – 2
6BH–1111E–00	2 – 12
6S5–11133–10	2 – 3
6S5–11166–10	12 – 1
6S5–11167–10	12 – 6
6BH–11181–00	2 – 11
	42 – 3
6S5–11191–20	1 – 1
6BH–11193–00	1 – 3
	42 – 2
69J–11301–10	3 – 9
6S5–1131M–10–8P	3 – 17
68V–11325–02	3 – 10
67F–11328–00	3 – 11
6S5–11377–00	3 – 16
6S5–11411–00	4 – 1
6S5–11416–00	4 – 2
6S5–11416–10	4 – 2
6S5–11416–20	4 – 2
6S5–11416–30	4 – 2
6S5–11416–40	4 – 2
6S5–11459–01	4 – 15
6S5–11603–00	4 – 4
6ET–11631–00–B0	4 – 3
6ET–11633–00	4 – 6
6S5–11650–10	4 – 8
6S5–11654–10	4 – 9
6S5–11656–40	4 – 10
6S5–11656–50	4 – 10
6S5–11656–60	4 – 10
6S5–11656–70	4 – 10
6S5–11941–10	1 – 8
6S5–12111–00	5 – 5
6S5–12113–00	5 – 8
6S5–12116–00	5 – 7
6S5–12117–00	5 – 9
3LD–12118–00	5 – 10
51Y–12119–00	5 – 11
6S5–12121–00	5 – 6
6S5–12153–00	5 – 13
3LD–12168–00	5 – 12
3LD–12168–20	5 – 12
3LD–12168–40	5 – 12
3LD–12168–60	5 – 12
3LD–12168–80	5 – 12
3LD–12168–A0	5 – 12
3LD–12168–F0	5 – 12
3LD–12168–H1	5 – 12

PART NO.	REF. NO.
3LD–12168–K1	5 – 12
3LD–12168–M1	5 – 12
3LD–12168–R1	5 – 12
3LD–12168–U1	5 – 12
3LD–12168–W1	5 – 12
3LD–12168–Y1	5 – 12
3LD–12169–11	5 – 12
3LD–12169–31	5 – 12
3LD–12169–50	5 – 12
3LD–12169–70	5 – 12
3LD–12169–90	5 – 12
3LD–12169–E0	5 – 12
3LD–12169–G0	5 – 12
3LD–12169–J0	5 – 12
3LD–12169–L0	5 – 12
6S5–12171–10	5 – 1
6D3–12176–10	5 – 3
6S5–12181–10	5 – 2
6S5–121E2–00	5 – 19
	42 – 6
6S5–12210–00	5 – 18
6S5–12228–01	2 – 7
6BH–12241–00	5 – 25
6BH–12251–00	5 – 24
6BH–12252–00	5 – 15
6BH–12279–00	5 – 16
6S5–12289–00	4 – 12
60E–12411–01	2 – 14
6BH–12413–00	2 – 15
6S5–1243E–01	14 – 11
60E–1244E–00	22 – 35
6BH–1244H–00	14 – 22
6CS–12469–A0	3 – 21
6CS–12517–00	3 – 22
	42 – 5
6CS–12552–00	14 – 27
6S5–12576–01	14 – 42
6S5–12577–00	14 – 31
6S5–12578–00	2 – 17
6S5–12579–00	14 – 34
6CS–12580–00	14 – 5
6CS–12581–00	14 – 4
6BH–12584–00	14 – 15
6CS–12588–00	14 – 24
6S5–12589–01	14 – 20
6S5–12594–00	14 – 41
6S5–12858–00	11 – 2
6CS–12880–00	6 – 3

PART NO.	REF. NO.
6S5–1310A–23	10 – 1
6BH–1319K–00	3 – 30
6S5–13300–22	9 – 1
6S5–13317–10	10 – 4
6S5–13337–10	3 – 24
6S5–13405–11	10 – 2
6S5–13416–00	9 – 7
6S5–13418–00	5 – 21
69J–13440–03	11 – 1
60E–13446–00	11 – 12
6S5–13446–10	9 – 5
6S5–13470–31	11 – 3
6S5–13477–00	10 – 3
6S5–13532–00	6 – 18
6BH–13556–00	11 – 4
8FP–13556–10	6 – 12
6BH–13557–00	3 – 18
	42 – 20
6S5–13563–00	9 – 2
	42 – 8
6P2–13578–00	6 – 5
6P2–13588–00	6 – 4
6S5–13641–A2	6 – 2
6BH–13645–00	6 – 24
	42 – 13
6CS–13651–00	7 – 25
6S5–13670–10	7 – 12
6S5–13691–12	7 – 13
6S5–13750–10	6 – 1
6S5–13761–10	6 – 10
6S5–13907–01	23 – 1
6S5–14159–00	6 – 19
68V–1416A–00	6 – 11
6S5–1416A–00	7 – 4
	42 – 14
6S5–14199–00	7 – 3
6S5–141A0–05	7 – 1
6S5–14243–01	7 – 19
6S5–14285–00	6 – 15
6AN–14294–10	6 – 21
6CS–14305–10	37 – 1
6S5–14349–00	7 – 10
6S5–14360–11	6 – 9
6CS–14413–00	6 – 31
6S5–14435–00	7 – 18
6BH–14445–00	6 – 17
6CS–14445–00	6 – 29
6CS–14446–00	6 – 6

PART NO.	REF. NO.
6D3–1444B–00	6 – 13
6S5–14457–00	6 – 16
6S5–14496–00	6 – 8
6CS–14572–00	6 – 28
6S5–14613–00	13 – 1
	42 – 21
6S5–14711–10	13 – 2
6BH–14721–10	13 – 6
6S5–14739–00	13 – 7
	42 – 15
6BH–14749–00	13 – 14
	42 – 16
6CS–1475A–00	13 – 18
6S5–14771–00–94	13 – 11
6BH–14784–01–94	13 – 15
6CS–15100–11	3 – 1
6CS–15362–00	3 – 27
6S5–15363–00	1 – 9
6S5–15486–10	10 – 5
5EL–15511–00	20 – 6
6S5–15515–00	19 – 3
6S5–15517–00	19 – 5
6S5–15521–00	19 – 4
6S5–15590–00	19 – 1
6S5–17031–01	4 – 17
6S5–17525–01	4 – 14
6S5–17529–00	4 – 19
6S5–17553–00	4 – 23
6S5–17572–01	4 – 11
6S5–17585–10	4 – 22
6S5–17800–20	4 – 16
EU0–23814–31	38 – 30
6S5–24300–01	6 – 20
70R–24489–00	33 – 4
70R–24543–00	33 – 3
6EX–2812A–00	21 – 16
6BH–41661–00–94	24 – 4
6BH–41662–00–94	24 – 5
66V–42414–00	15 – 9
	42 – 26
67X–44517–10	24 – 1
663–45119–00	16 – 11
6S5–45332–00–94	16 – 4
6S5–45511–00	15 – 17
6S5–45593–00–94	16 – 12
6ET–45613–00	16 – 9
6S5–45813–01–94	4 – 13
6BH–4581J–00	16 – 1

PART NO.	REF. NO.
6S5–5111K–00	15 – 21
	42 – 29
68N–5112T–00	27 – 3
66V–51312–01–94	15 – 4
6S5–51315–02	15 – 7
6S5–51323–00	16 – 2
6BH–51348–01	15 – 24
6S5–52358–00	17 – 11
F1S–6134M–00	38 – 5
F2C–6134M–00	38 – 6
F1S–6134M–10	38 – 7
F1W–61355–00	38 – 17
F1B–613C1–00	38 – 13
F3J–61400–00	38 – 1
F3J–6140B–00	36 – 11
F1W–6142B–00	38 – 18
F1W–61435–00	38 – 3
F1B–61438–00	36 – 2
F1S–6143C–00	38 – 10
F2N–61460–00	36 – 5
EU0–61461–02	38 – 15
F1B–61461–02	36 – 4
F1S–6146A–00	38 – 9
F1S–61481–10	36 – 1
F3J–6150A–00	36 – 18
F3J–6150D–00	36 – 19
F3J–6150E–00	36 – 16
F3J–6150F–00	36 – 17
F1W–61516–00	38 – 23
F2S–6151M–00	38 – 19
F1B–6151S–00	36 – 3
F1S–6153R–01	38 – 14
F1K–61624–00	28 – 1
F0X–61637–00	28 – 4
EU0–61652–00	14 – 45
	27 – 8
F0X–61652–00	28 – 5
GP7–61652–00	34 – 20
F1S–61782–00	38 – 8
EW2–62142–00	33 – 2
F1G–62149–00	33 – 8
F2F–6214A–00	33 – 1
GJ3–6215F–00	23 – 17
F1B–62241–00	34 – 4
F2S–6273B–00	18 – 23
F1X–62875–00	25 – 34
F1W–6358B–00	38 – 20
F2S–6411H–00	40 – 12

PART NO.	REF. NO.
F2S–6514S–00	26 – 20
F1W–6514T–00	26 – 21
F1B–6517R–00	25 – 35
GA7–65772–00	35 – 4
EU0–65901–02	40 – 15
F3J–65938–00	38 – 11
F3J–65939–00	38 – 12
F1B–65986–13	40 – 14
6CS–6725F–00	37 – 3
	37 – 12
F3J–67410–00	38 – 2
GH7–6753B–00	34 – 18
F1S–67620–00	34 – 22
F1W–6773D–00	38 – 4
F2S–67743–00	33 – 36
	33 – 37
F1B–67747–00	33 – 15
EU0–67767–31	33 – 27
EW2–67821–00	35 – 3
F2N–67823–10	25 – 9
F2S–68090–00	23 – 21
F2S–68090–10	23 – 22
F2S–6820A–30	23 – 19
GA7–68218–00	34 – 8
6S5–682E0–00	23 – 2
F3J–68310–00	37 – 10
FK7–68312–02	37 – 13
FK7–68313–02	37 – 14
F1S–68341–00	38 – 24
EW2–68348–00	37 – 11
F3J–6838B–00	38 – 22
F3J–6838C–00	38 – 21
6S5–81167–10	19 – 13
	42 – 17
6S5–81168–00	19 – 17
	42 – 18
6S5–81315–00	22 – 23
6S5–81328–00	19 – 18
6S5–81337–20	19 – 11
6S5–81364–10	19 – 24
6S5–81410–11	19 – 7
6S5–81450–01	19 – 6
6S5–81800–00	20 – 1
6S5–81810–00	20 – 13
6S5–81820–00	20 – 12
6S5–81826–00	20 – 10
6S5–81830–00	20 – 3
6S5–81840–00	20 – 8

PART NO.	REF. NO.
11H–81844–00	20 – 2
4G0–81844–00	20 – 4
5EL–81845–00	20 – 11
6CS–81845–00	21 – 2
3TB–81847–00	20 – 9
1J7–81847–60	20 – 5
5A8–81850–10	20 – 14
6CS–81860–00	37 – 2
1B7–81940–00	21 – 29
6S5–81942–11	21 – 3
6CS–81953–00	21 – 33
6EX–8195A–00	21 – 15
6S5–81960–10	22 – 1
6S5–81972–01–94	22 – 3
6S5–81975–00	22 – 2
6CS–82115–00	21 – 27
6S5–82116–00	23 – 29
6CS–82117–00	21 – 28
67F–82151–00	21 – 12
6EX–82151–00	21 – 14
67F–82151–10	21 – 13
67F–82151–30	21 – 10
67F–82151–40	21 – 11
6EX–82170–00	21 – 9
6S5–82310–00	22 – 9
6A0–82317–00	21 – 7
	21 – 23
6BH–82380–00	6 – 7
68V–82504–00	22 – 22
60E–82556–00	23 – 3
60E–82560–01	22 – 17
6CS–82588–00	21 – 17
1UA–82591–00	26 – 22
6S5–8259E–00	21 – 25
6CS–8259L–20	21 – 35
6CS–8273J–10	22 – 26
60E–83627–00	21 – 4
682–84385–01	14 – 10
6CS–85516–00	3 – 31
6CS–8572F–00	3 – 29
6AN–85780–00	22 – 24
61A–85790–00	22 – 14
6AA–85790–00	22 – 30
6S5–85886–00	6 – 14
60E–85896–01	22 – 20
6CS–8591A–40	21 – 5
6CS–8591A–50	21 – 5
6B6–86261–00	23 – 30
6B6–86261–10	23 – 30
6B6–86265–00	23 – 31
6B6–86265–10	23 – 31
6CS–E110M–00	1 – 4
6S5–E118E–00	1 – 6
6S5–E1328–00	1 – 5
6ET–E2289–00	16 – 13
67X–E2590–10	14 – 44
6S5–E4410–01	8 – 5
6S5–E4419–00	8 – 11
6S5–E4436–00	8 – 7
6S5–E4451–00	8 – 6
6S5–E4752–00	13 – 17
6S5–G2717–00	8 – 8
6BH–G4532–00	24 – 2
6BH–G4574–00	24 – 3
6AN–G5214–00	15 – 10
6CS–G5538–00	15 – 13
6CS–G5831–00	15 – 1
6AN–G6882–00	15 – 8
6S5–R1142–10	8 – 12
6AN–R1190–00	15 – 38
6S5–R1313–01	15 – 35
6ET–R1314–01	17 – 4
6BH–R1318–01	15 – 26
6CS–R1321–00	15 – 23
6AN–R1326–00	15 – 20
6CS–R1333–00	18 – 1
6ET–R1341–00	17 – 1
6AN–R1341–01	18 – 2
6ET–R1342–00	17 – 2
6S5–R1381–01	16 – 17
F2C–U1314–00	28 – 15
F2S–U1355–00	24 – 8
F2S–U13C1–00	25 – 18
	26 – 8
	26 – 12
	26 – 46
	32 – 31
	32 – 32
	39 – 5
F2S–U142D–10	39 – 2
F2S–U142E–00	39 – 4
F2N–U142L–00	23 – 10
	25 – 11
	25 – 22
	25 – 27
	25 – 30
F2N–U142L–00	25 – 32
	29 – 3
	29 – 12
	29 – 15
	29 – 18
	35 – 23
	35 – 26
F2S–U143D–10	39 – 1
F2S–U143E–10	39 – 3
F2S–U143L–01	39 – 7
EU0–U1461–03	17 – 14
GH3–U146E–00	15 – 39
F2S–U1516–00	37 – 9
F2C–U151S–00	18 – 5
F3J–U1552–00	37 – 4
F1X–U1554–00	38 – 28
F2S–U155D–02	37 – 5
	37 – 6
F2N–U1628–02	32 – 1
F1B–U1629–00	32 – 16
F1B–U1653–02	32 – 4
F2S–U1708–02	25 – 7
F2N–U2127–00	30 – 3
F2N–U213G–01	30 – 5
F1W–U2159–00	33 – 6
6ET–U215E–00	15 – 30
F2S–U2187–00	30 – 1
F2S–U2188–00	30 – 2
F1W–U224E–00	34 – 1
F1S–U2280–02	27 – 19
F2S–U2284–00	32 – 26
F1S–U2285–00	27 – 20
F2S–U2511–20	29 – 1
F2S–U2512–20	29 – 4
F2S–U2519–01	29 – 5
F2S–U251D–20	29 – 13
F2S–U251E–20	29 – 16
F2S–U252E–20	29 – 8
F2S–U252F–20	29 – 10
F2S–U2624–00	32 – 24
F2S–U264L–01	32 – 33
F2S–U2663–00	26 – 5
F1W–U2664–01	31 – 3
F1K–U266B–00	26 – 38
	26 – 42
F2S–U266B–00	26 – 6
F2N–U266C–01	26 – 14
F2C–U266D–01	31 – 8
F2C–U266E–00	31 – 27
F1W–U269B–00	27 – 7
F2S–U270B–10	32 – 5
F2S–U271F–01	32 – 23
F2C–U2733–00	35 – 12
F2S–U278A–00	28 – 12
F2S–U278F–00	28 – 16
F2S–U278H–00	28 – 17
F2S–U316C–00	25 – 41
F2S–U351H–00	29 – 21
F2S–U351J–00	29 – 22
F2S–U351K–00	29 – 23
F2S–U351M–00	29 – 24
F2S–U351N–00	29 – 25
F2S–U3581–01	29 – 20
F2S–U370J–00	25 – 29
F2S–U370K–00	25 – 31
F2S–U371A–20	31 – 1
F2S–U371B–20	31 – 2
F2S–U372A–20	31 – 6
F2S–U372B–20	31 – 7
F2S–U375E–00	31 – 16
F1W–U3768–01	26 – 3
	32 – 21
GH1–U3774–00	31 – 12
	32 – 6
F3J–U377B–00–P1	25 – 19
F3J–U377C–00–P1	25 – 24
F2C–U377H–00	28 – 14
F2C–U378C–00	31 – 18
F2S–U3844–00	25 – 6
F2C–U3850–00	31 – 4
	31 – 9
F2P–U4114–10	40 – 11
F2S–U4116–00	40 – 10
F1W–U4121–00	40 – 13
F1X–U413P–02	41 – 11
F1S–U415B–11	41 – 5
GP8–U416H–01	41 – 12
F2S–U417B–B0	40 – 1
F2S–U417C–B0	40 – 2
F2S–U417D–B0	40 – 3
F2S–U417E–B0	40 – 4
F2S–U417F–B0	40 – 5
F2S–U417G–B0	40 – 6
F2S–U417H–B0	40 – 7
F2S–U417J–B0	40 – 8
F3K–U417M–20	40 – 9
F1G–U418F–00	41 – 8
F1S–U419E–01	41 – 10
F2S–U41B1–10	41 – 1
F1B–U41B1–21	41 – 2
F1B–U41B1–31	41 – 3
F1B–U41B2–01	41 – 4
F0V–U41DB–12	41 – 6
F1S–U41E1–11	41 – 9
F1B–U41F5–21	41 – 7
F2C–U4256–00	34 – 24
F2N–U4261–00	35 – 14
F2S–U475B–00	26 – 13
F2S–U475F–00	26 – 16
F1W–U491K–00	29 – 2
	29 – 9
	29 – 11
	29 – 14
	29 – 17
GP7–U4953–10	32 – 3
	32 – 14
	32 – 15
F2S–U510D–01	26 – 45
F2S–U5135–00	26 – 4
F2S–U513M–01–P1	26 – 35
F1W–U5148–00	26 – 9
F0X–U515E–01	25 – 5
F2S–U515N–01–P1	26 – 11
F2S–U5162–00	38 – 32
F3J–U516R–00	34 – 7
F2S–U517B–01–P1	26 – 1
F2S–U517C–01	26 – 32
F2S–U517D–00	26 – 19
F1X–U517E–01	25 – 4
	25 – 15
	25 – 21
	25 – 26
F2S–U517F–00	25 – 14
F2S–U517H–00	25 – 33
F2S–U518E–00	26 – 26
F2S–U518M–01–P1	32 – 22
F2S–U519D–00	25 – 36
F2S–U519D–20	32 – 25
F2S–U519G–02	26 – 2
F2S–U5554–02	25 – 1
F2S–U5633–00	25 – 44
F1K–U5772–04	25 – 49
	33 – 34
F2S–U590D–31	26 – 37
F2S–U590E–31	26 – 41
F2S–U591A–00	25 – 37
F2C–U591A–02	31 – 24
F2C–U591C–00	31 – 25
F1W–U591C–01	25 – 38
F1W–U591D–00	25 – 39
F2C–U591D–01	31 – 26
F1K–U5983–01	25 – 47
GD0–U7249–00–05	16 – 19
F1W–U725E–00	38 – 27
F1S–U725E–01	18 – 20
F2S–U72C0–01	18 – 3
6CS–U72M2–00	15 – 27
F2M–U732B–00	24 – 16
F2S–U732B–00	24 – 12
F2S–U732B–10	24 – 14
EU0–U7354–00–01	24 – 9
EU0–U7354–00–03	24 – 9
EU0–U7354–00–05	24 – 9
EU0–U7354–00–10	24 – 9
EU0–U7354–00–20	24 – 9
F1B–U751G–00	35 – 25
F2S–U7525–00	14 – 46
F1S–U7525–01	34 – 2
F2C–U753B–01	35 – 10
F2S–U753C–00	35 – 15
F1W–U7550–02	35 – 1
F2S–U7555–01	35 – 6
F2C–U7557–01	18 – 30
F2C–U755G–00	35 – 22
F2C–U7564–00	35 – 11
GJ1–U7578–21	36 – 8
F1S–U757B–01	35 – 24
F3J–U757E–00	18 – 35
F3J–U757F–00	18 – 36
F2N–U758D–00	35 – 18
F2S–U759B–00	33 – 38
F1K–U759C–00	25 – 42
	25 – 46
	33 – 40
	33 – 41
	35 – 16
GJ1–U759C–00	25 – 45
F1W–U759C–01	33 – 39
F1B–U761D–02	27 – 10
F1B–U7626–00	34 – 10
F1B–U7628–00	34 – 15
F3J–U7629–00	34 – 13

PART NO.	REF. NO.
F1B–U7656–00	34 – 9
F1B–U7698–01	34 – 6
F2S–U7711–02	33 – 13
F1W–U771H–00	28 – 13
6ET–U773D–00	15 – 32
6CN–U773D–01	15 – 28
F1B–U7773–00	33 – 14
F2N–U7831–10	33 – 17
GP7–U7832–01	33 – 18
GP7–U7833–11	33 – 19
GP7–U7834–10	33 – 22
GP7–U7835–00	33 – 20
F2S–U7835–01	25 – 40
GP7–U783F–00	33 – 24
F2S–U7844–00	33 – 25
F0D–U7856–10	33 – 33
F0D–U785G–10	23 – 15
	33 – 31
F2H–U785H–00	33 – 28
F2N–U8169–00	28 – 11
F2S–U8211–00	23 – 8
EU0–U8217–H2	23 – 4
EU0–U821D–00	23 – 14
F1K–U8221–00	23 – 13
F1S–U8221–00	23 – 11
	35 – 2
	35 – 17
EU0–U8221–30	23 – 12
F1X–U822E–00	23 – 23
F3J–U822E–00	36 – 10
F2S–U8244–00	31 – 17
F2S–U8262–01–P0	25 – 17
F1W–U826C–00	23 – 25
F1K–U826C–03	27 – 25
F3J–U8285–00	36 – 12
F1X–U828E–01	25 – 2
F1S–U828H–01	27 – 15
F2P–U828K–00	25 – 48
F1W–U828M–00	18 – 8
	18 – 14
	18 – 17
	27 – 16
	30 – 7
	33 – 9
	34 – 23
	35 – 19
	36 – 23
F1B–U8360–01	34 – 5

PART NO.	REF. NO.
F3J–U8368–00	36 – 20
F1W–U8376–00	23 – 27
F1G–U8571–02	18 – 28
F1B–U8572–01	18 – 25
F1W–U8572–01	27 – 24
F2S–U8577–00	18 – 26
F2S–U8592–00	23 – 5
F2S–U8593–00	23 – 6
F2S–U883B–00	16 – 20
F2S–U883E–00	16 – 21
F2S–U883N–01	28 – 7
F2S–U883P–01	28 – 8
F2S–U883T–00	28 – 9
F2S–U890L–04	31 – 11
F2S–U890M–11	32 – 29
F2S–U890N–11	32 – 30
F2S–U89A1–01–P1	32 – 17
F1S–U8K31–02	18 – 4
6CS–W0001–01	42 – 1
6S5–W0001–22	42 – 22
6S5–W009A–02–94	2 – 1
6CS–W009B–11–94	3 – 4
6S5–W1783–20	4 – 18
90105–05020	7 – 2
90105–06028	1 – 2
90105–06035	2 – 16
90105–06184	11 – 6
90105–06185	11 – 7
90105–06903	22 – 10
90105–06M07	3 – 12
90105–07004	5 – 4
90105–07009	2 – 6
90105–08021	3 – 35
90105–08054	11 – 9
90105–08169	11 – 10
90105–08170	11 – 11
90105–08188	7 – 8
90105–08249	19 – 15
90105–08860	28 – 10
90105–10071	3 – 5
90109–06218	26 – 23
	26 – 30
90109–06268	3 – 34
90109–06832	16 – 22
90109–06874	24 – 10
90109–06875	24 – 11
90109–08041	18 – 34
90110–06040	28 – 6

PART NO.	REF. NO.
90110–06040	36 – 13
90110–06182	3 – 25
90110–06382	37 – 7
90110–06822	15 – 22
90110–08212	19 – 2
90116–08032	6 – 26
90116–10044	7 – 20
90119–05803	25 – 13
90119–059U4	26 – 33
90119–06048	22 – 5
90119–06827	18 – 38
90119–06832	23 – 9
90119–06858	25 – 12
	26 – 40
	26 – 44
90119–06880	25 – 10
	25 – 16
	25 – 20
	25 – 23
	25 – 25
	25 – 28
90119–06891	16 – 16
	17 – 3
90119–06893	15 – 5
90119–06895	26 – 25
90119–06897	15 – 11
90119–069UH	26 – 27
90119–069UP	31 – 5
	31 – 10
90119–069UX	17 – 7
90119–06M35	21 – 6
	21 – 22
90119–06MA3	22 – 4
	22 – 28
90119–08034	13 – 4
	13 – 10
90119–08074	6 – 33
90119–08096	13 – 12
90119–08097	13 – 5
	13 – 9
90119–08099	6 – 32
90119–08823	18 – 24
	18 – 27
	18 – 29
90119–08828	31 – 21
90119–08829	32 – 10
90119–08832	32 – 18
90119–08840	17 – 5

PART NO.	REF. NO.
90119–08851	15 – 36
	15 – 42
	36 – 14
90119–08859	24 – 7
90119–08861	28 – 18
90119–089U7	18 – 31
90119–089UL	26 – 39
	26 – 43
90119–089UT	21 – 1
90119–089UU	16 – 18
	38 – 31
90119–08M22	8 – 3
	22 – 7
90119–10011	7 – 24
90119–10029	13 – 13
90119–10046	7 – 16
90119–10047	7 – 15
90119–10806	15 – 34
90119–10810	15 – 3
90149–06229	19 – 8
90149–10052	24 – 6
90150–05807	18 – 6
90154–06017	39 – 6
90154–06030	39 – 8
90169–049U1	33 – 21
90170–20802	15 – 19
90173–06015	21 – 20
90176–08080	6 – 27
90176–10001	7 – 21
90183–06902	26 – 7
90201–052E8	19 – 21
90201–06028	7 – 9
	10 – 8
90201–06801	17 – 9
	17 – 12
90201–068G0	37 – 8
90201–068M4	15 – 40
90201–06906	36 – 6
90201–099U3	31 – 19
90201–10801	18 – 21
90201–109U6	31 – 13
	32 – 7
90201–12039	2 – 8
90201–132G5	4 – 20
90267–329UR	33 – 23
90267–409U3	32 – 34
90267–409U5	36 – 21
90267–48020	26 – 28

PART NO.	REF. NO.
90267–48802	27 – 17
	36 – 24
90267–48806	30 – 4
90267–48807	25 – 43
	26 – 10
90267–48825	29 – 19
90267–489U1	23 – 7
	23 – 26
	23 – 28
	25 – 50
	27 – 26
	33 – 35
	35 – 5
90267–489U2	24 – 13
	24 – 15
	24 – 17
	33 – 5
90267–489U6	18 – 11
	18 – 12
	18 – 15
	18 – 18
	26 – 36
	30 – 8
	33 – 7
	33 – 11
	34 – 25
	35 – 21
	38 – 29
90267–489U8	27 – 12
	29 – 6
90269–08801	26 – 17
	26 – 18
90280–03047	19 – 10
90387–06080	18 – 37
90387–06119	21 – 8
	21 – 24
90387–06289	16 – 15
90387–06M05	19 – 22
90387–06M30	17 – 8
90387–08M06	15 – 37
	15 – 43
90387–08M30	17 – 6
90387–08M37	8 – 2
	22 – 6
90387–11007	7 – 17
90387–11008	7 – 22
90401–10040	5 – 23
	9 – 8

PART NO.	REF. NO.
90430–06232	11 – 8
90430–06M03	3 – 13
90430–08209	10 – 10
90430–10007	5 – 22
	9 – 9
	42 – 7
90430–12002	18 – 32
90430–16910	34 – 19
90445–16013	14 – 38
90445–18012	14 – 16
90445–20800	27 – 4
90445–20804	27 – 1
90445–21806	14 – 1
90445–21807	14 – 8
90446–10MH3	22 – 15
90446–27M55	14 – 32
	27 – 5
90446–27M73	27 – 2
90447–19005	14 – 17
90447–19011	14 – 35
90447–19016	14 – 28
90447–19017	6 – 22
90447–19018	14 – 25
90447–19801	14 – 7
90447–22011	14 – 12
90447–22015	12 – 2
90447–22016	12 – 7
90447–22801	14 – 2
90447–22802	14 – 9
90447–28004	34 – 12
	34 – 16
90447–28008	2 – 18
90450–17M17	6 – 23
90450–70006	7 – 26
90450–75003	7 – 11
90450–90002	7 – 27
	8 – 4
90450–99015	13 – 20
90450–99016	13 – 19
90450–99801	35 – 8
90450–99804	35 – 9
90464–09M47	21 – 21
90464–17800	33 – 12
90464–20008	22 – 29
90464–24003	14 – 30
90464–31001	22 – 13
	22 – 25
	22 – 31

PART NO.	REF. NO.
90464–31002	22 – 32
90464–32801	18 – 7
	18 – 9
	18 – 16
	18 – 19
	23 – 20
	23 – 24
	27 – 18
	27 – 29
	33 – 10
	35 – 20
	36 – 9
	36 – 22
	36 – 25
90464–35132	14 – 19
90464–99801	18 – 13
90464–99804	30 – 6
90465–11829	23 – 18
	33 – 29
	33 – 30
	33 – 32
90465–13M18	22 – 12
90465–14M66	12 – 5
	21 – 36
90467–089U1	23 – 16
90467–14803	15 – 31
	34 – 14
	34 – 21
90467–150A1	3 – 32
	14 – 23
90467–150A5	14 – 6
90467–160A0	14 – 18
	14 – 26
	14 – 33
	14 – 36
	14 – 39
90467–170A4	14 – 29
90467–170A5	14 – 37
90467–17802	35 – 13
90467–18804	27 – 6
90467–190A0	12 – 3
	12 – 4
90467–200A0	27 – 14
90467–200A3	12 – 9
	14 – 3
	14 – 13
	14 – 14
	14 – 21

PART NO.	REF. NO.
90467–200A3	14 – 40
	14 – 43
90467–21800	27 – 11
90467–240A0	2 – 19
	12 – 8
90467–25801	34 – 11
90467–26800	34 – 3
	34 – 17
	34 – 26
90480–19800	25 – 3
90480–20132	22 – 33
90480–21M63	7 – 23
90480–22801	8 – 10
90480–22M15	8 – 1
	22 – 8
90601–118UF	15 – 29
	27 – 9
90601–152U3	16 – 23
90601–155U4	33 – 26
90601–170UG	35 – 7
90601–200U1	27 – 13
90605–502U1	26 – 15
90605–502U2	25 – 8
91314–06020	9 – 4
91314–06060	10 – 7
91317–05010	19 – 20
91317–06014	19 – 19
91380–04030	37 – 16
91380–06016	22 – 21
91380–06020	19 – 23
91380–06025	5 – 20
91809–16002	2 – 4
	2 – 5
92014–06012	2 – 13
	22 – 34
92903–06600	2 – 10
92903–08600	20 – 16
9290P–20600	15 – 18
92990–06100	20 – 17
92990–10600	22 – 16
92990–12200	18 – 33
	28 – 3
92995–06100	21 – 31
92995–06600	21 – 19
	21 – 32
	22 – 19
92995–08600	3 – 15
9299R–05200	18 – 10

PART NO.	REF. NO.
9299R–05200	27 – 22
	29 – 7
9299R–08200	27 – 28
	31 – 23
	32 – 12
	32 – 20
	32 – 28
9299R–10200	31 – 14
	32 – 8
93101–31001	15 – 16
	42 – 28
93102–29008	16 – 5
	42 – 24
93102–29009	16 – 8
	42 – 25
93102–31009	15 – 15
	42 – 27
93210–06632	3 – 28
93210–11453	3 – 3
	42 – 4
93210–12016	3 – 33
	42 – 11
93210–18322	11 – 13
	42 – 10
93210–21631	9 – 6
	42 – 9
93210–22MF1	16 – 3
	42 – 23
93210–24M79	1 – 10
	42 – 12
93210–30611	15 – 25
	42 – 30
93210–32172	22 – 27
	42 – 19
93306–00805	19 – 12
93306–20654	15 – 12
93306–20655	16 – 7
93306–30537	15 – 14
93410–12003	20 – 7
93450–24028	4 – 5
	4 – 7
93450–66156	16 – 6
93604–10M03	3 – 8
	7 – 5
	11 – 5
93606–12019	3 – 7
	9 – 3
	13 – 8

PART NO.	REF. NO.
93606–12019	15 – 6
	15 – 33
	16 – 14
93608–16M16	13 – 3
93700–06M03	16 – 10
94591–66152	5 – 14
94702–00427	22 – 11
95023–06012	6 – 30
	9 – 10
95024–06014	3 – 19
95024–06020	3 – 20
	10 – 12
95024–06035	10 – 11
95024–08035	13 – 16
95380–06700	20 – 18
9538R–06600	17 – 10
	17 – 13
9538R–06700	15 – 41
	36 – 7
95720–06300	26 – 24
	38 – 16
9572R–05300	27 – 23
9572R–06300	26 – 29
	26 – 31
	33 – 16
9572R–08300	27 – 27
	31 – 20
	31 – 22
	32 – 2
	32 – 11
	32 – 13
	32 – 19
	32 – 27
	36 – 15
	38 – 26
9572R–10300	18 – 22
	31 – 15
	32 – 9
95814–06012	1 – 7
	21 – 34
95814–06030	5 – 17
95814–06035	3 – 23
95814–06065	7 – 7
95814–06070	3 – 6
95814–08020	10 – 9
95814–08065	7 – 6
95817–06014	10 – 6
97013–06055	2 – 9

PART NO.	REF. NO.
97013–08030	20 – 15
97080–08035	38 – 25
97095–06012	21 – 30
97095–06014	21 – 18
97095–06016	22 – 18
97095–08040	3 – 14
97513–05514	19 – 9
97513–08535	6 – 25
97780–30610	37 – 15
97780–60516	8 – 9
97780–60520	21 – 26
9778R–50010	26 – 34
9788R–05025	27 – 21
99009–24700	4 – 21
99009–72500	19 – 14
99530–10114	3 – 2
	3 – 26
	19 – 16
99590–14016	7 – 14
	15 – 2
99780–12600	28 – 2

PART NO.	REF. NO.