YAMAHA

PARTS CATALOGUE

WaveRunner VX Cruiser/Deluxe

VX1100A-P (F2X1,F2X2,F2X3/6EXA,6EXB,6EXC/6EX1)

VX1100B-P (F2X4,F2X5,F2X6/6EXA,6EXB,6EXC/6EX1)

1PF2X-100E1

( )

YAMAHA GENUINE Parts & Accessories

2017/10/13

NEWS NO.	DATE	COMMENT
PE0-WV-170005	Sep.,19,2017	COR:F2X,F2W,F4E,F4G,F3Y JET UNIT 2 LIST/ILLUST. CORRECTION

VX1100A-P/VX1100B-P
PARTS CATALOGUE
©2014 by Yamaha Motor Co., Ltd.
1st edition, November 2014
All rights reserved.
Any reprinting or unauthorized use
without the written permission of
Yamaha Motor Co., Ltd.
is expressly prohibited.
Printed in Japan.

FOREWORD

This Parts Catalogue is related to the parts for the model(s) on the cover page. When you are ordering replacement parts, please refer to this Parts Catalogue and quote both part numbers and part names correctly.

1. Modifications or additions which have been made after the issue of the Parts Catalogue will be announced in the Parts News.
   It is advisable that you make the necessary corrections to the Parts Catalogue according to the Parts News.

2. Abbreviations
   The following abbreviations are used in this Parts Catalogue.

   “UR” Use specified parts number.
   “UN” Use as many as needed.
   “AP” Alternate Parts
   “LM” Locally Made (Parts need to be ordered locally)
   “F#” Frame No. (Applicable machine No.)
   “O/S” Over Size

3. The number of components for assembly
   - Parts, which are to be supplied in an assembly, are listed with a dot (.) in front of the part name as shown below.
   - The numeral appearing to the right of each component part indicates the quantity of parts for each assembly unit.

PART NO.	DESCRIPTION	Q’TY	REMARKS
2F5–83310–60	FRONT FLASHER LIGHT ASSY	2	
115–83311–60	.BULB (6V–18W)	1	

4. Applicable colours of graphics are represented in the “REMARKS” as shown below.

PART NO.	DESCRIPTION	Q’TY	REMARKS
2N4–24110–00–X5	FUEL TANK COMP.	2	MXR
3J1–24240–10	.GRAPHIC, FUEL TANK	1	FOR MXR

5. Note that the illustrations for reference in finding parts numbers are not to be used for assembling. When assembling, please use the applicable service manual.

6. The asterisk (*) before a reference number indicates modified items after the first edition.

7. Applicable Serial No.

Engine Serial No.

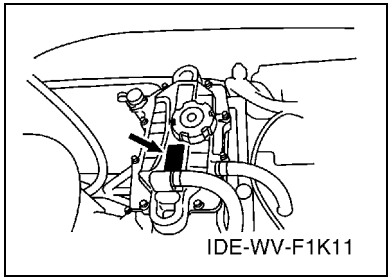

Primary Identification No.

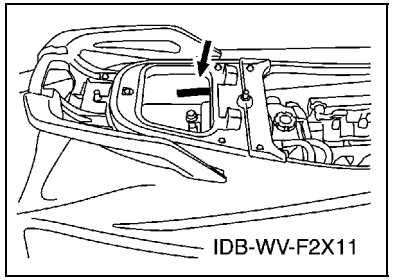

8. Applicable Colour Code (The (*) mark shows Model colour.)

Abbreviation	Colour Name	Colour Code
BMG(*)	BLACK METALLIC G	1050
DPBM11(*)	DARK PURPLISH BLUE METALLIC 11	1187
LGM3(*)	LIGHT GRAY METALLIC 3	0137
PURW(*)	PURE WHITE	0240

9. Quantity Column Information

Column No.	Name Of Q’ty Column	Destination
1	CAN	CANADA
2	EUR	EUROPE
3	GENE	EXCEPT CANADA, EUROPE

10. Applicable Starting Serial No.

Engine Serial No.

Serial No.	Name Of Q'ty Column	Model Code
6EX-1000001	CAN	6EXA
6EX-1000001	EUR	6EXC
6EX-1000001	GENE	6EXB

Primary Identification No.

Serial No.	Name Of Q'ty Column	Model Code
F2X-800101	CAN	F2X1
F2X-800101		F2X4
F2X-800101	EUR	F2X3
F2X-800101		F2X6
F2X-800101	GENE	F2X2
F2X-800101		F2X5

CONTENTS

CYLINDER 1
CRANKCASE 3
CRANKSHAFT & PISTON 4
VALVE 6
INTAKE 8
INTAKE 2 9
OIL PUMP 10
OIL COOLER 12
EXHAUST 1 14
EXHAUST 2 16
EXHAUST 3 18
JET UNIT 1 20
JET UNIT 2 22
JET UNIT 3 23
GENERATOR 24
STARTING MOTOR 25
ELECTRICAL 1 26
ELECTRICAL 2 29
ELECTRICAL 3 31
ENGINE MOUNT 33
ENGINE HATCH 1 34
ENGINE HATCH 2 36
HULL & DECK 38
GUNWALE & MAT 40
VENTILATION 43
SEAT & UNDER LOCKER 44
FUEL TANK 46
EXHAUST 4 48
CONTROL CABLE 49
STEERING 1 50
STEERING 2 51
STEERING 3 52
GRAPHICS 53
IMPORTANT LABELS 55
REPAIR KIT 1 57

INDEX

NUMERICAL INDEX 58

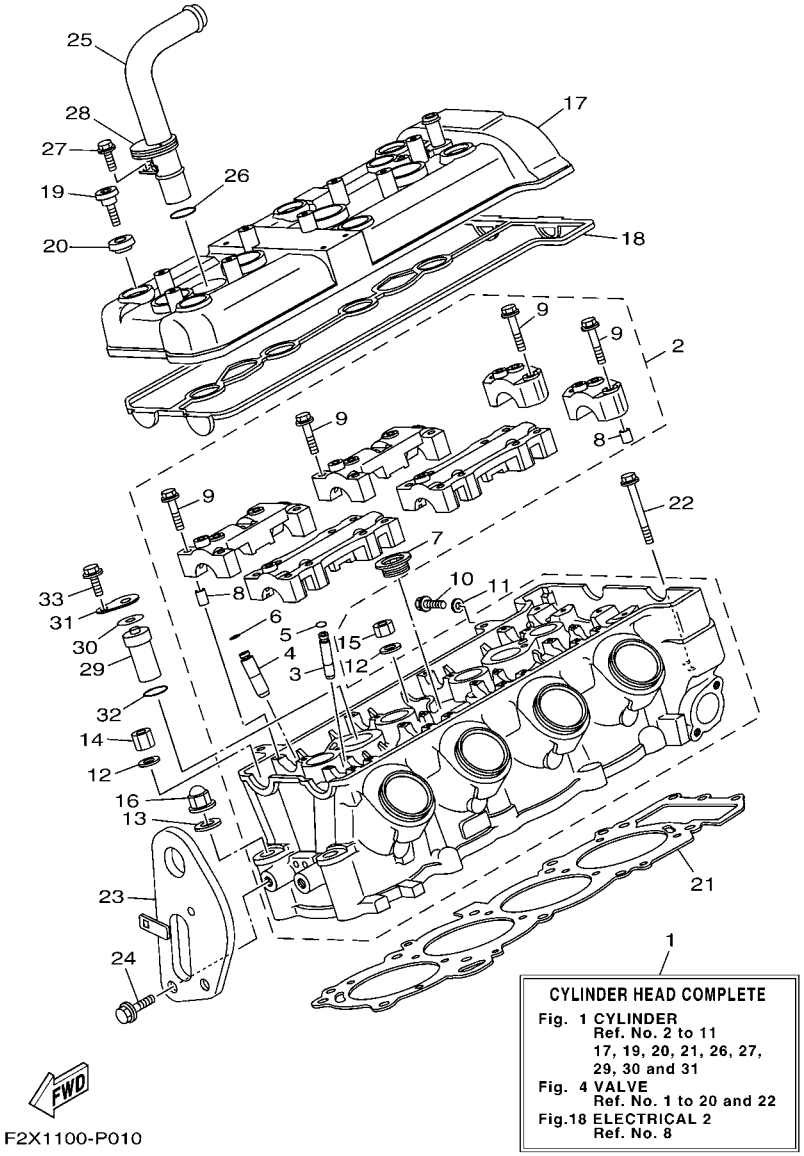

FIG. 1 CYLINDER

REF. NO.	PART NO.	DESCRIPTION	CAN	EUR	GENE			REMARKS
1	6EX–W009A–00–94	CYLINDER HEAD COMPLETE	1	1	1			
2	6D3–11102–00	CYLINDER HEAD ASSY	1	1	1			
3	3TJ–11133–10	.GUIDE, VALVE	12	12	12			
4	1WG–11133–11	.GUIDE, VALVE	8	8	8			
5	93440–07149	.CIRCLIP	12	12	12			
6	93440–10153	.CIRCLIP	8	8	8			
7	90340–27001	.PLUG, STRAIGHT SCREW	1	1	1			
8	91808–16023	.PIN, DOWEL	12	12	12			
9	90105–06026	.BOLT, FLANGE	28	28	28			
10	95023–06012	BOLT	1	1	1			
11	90430–06014	GASKET	1	1	1			
12	90201–10013	WASHER, PLATE	8	8	8			
13	90201–10019	WASHER, PLATE	2	2	2			
14	90179–10006	NUT	3	3	3			
15	90179–10414	NUT	5	5	5			
16	90176–10001	NUT, CROWN	2	2	2			
17	6EX–11191–00	COVER, CYLINDER HEAD 1	1	1	1			
18	60E–11193–01	GASKET, HEAD COVER 1	1	1	1			
19	90109–066F0	BOLT	6	6	6			
20	4KG–1111G–00	RUBBER, MOUNT 1	6	6	6			
21	6D3–11181–00	GASKET, CYLINDER HEAD 1	1	1	1			
22	97513–06555	BOLT, WITH WASHER	3	3	3			
23	6D3–85132–00	BRACKET, REFLECTOR 1	1	1	1			
24	97513–08520	BOLT, WITH WASHER	2	2	2			
25	6EX–12482–00	PIPE 2	1	1	1			
26	93210–18417	O-RING	1	1	1			
27	91317–06016	BOLT	1	1	1			

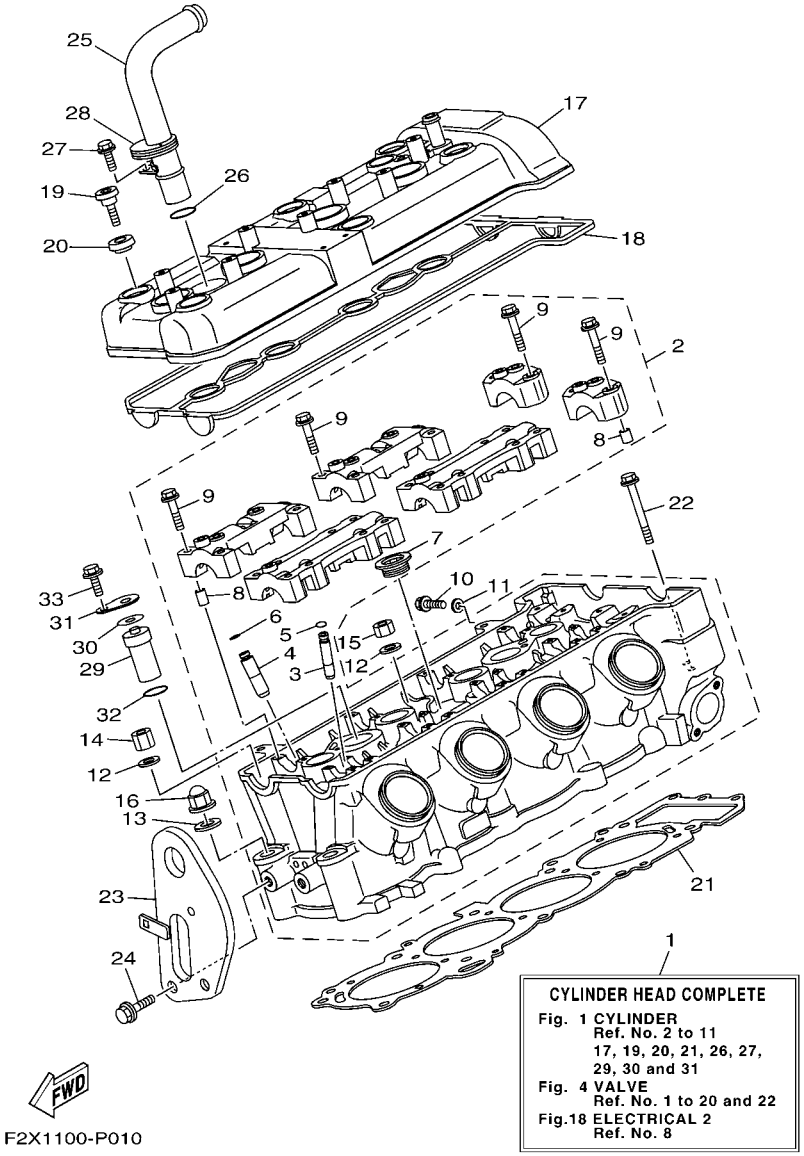

FIG. 1 CYLINDER

REF. NO.	PART NO.	DESCRIPTION	CAN	EUR	GENE			REMARKS
28	6EX–12494–00	SEAL, PIPE 1	1	1	1			
29	60E–12483–10	PIPE 3	1	1	1			
30	60E–12474–00	GASKET 1	1	1	1			
31	60E–12537–01	PLATE 2	1	1	1			
32	93210–18417	O-RING	1	1	1			
33	91317–06016	BOLT	1	1	1			

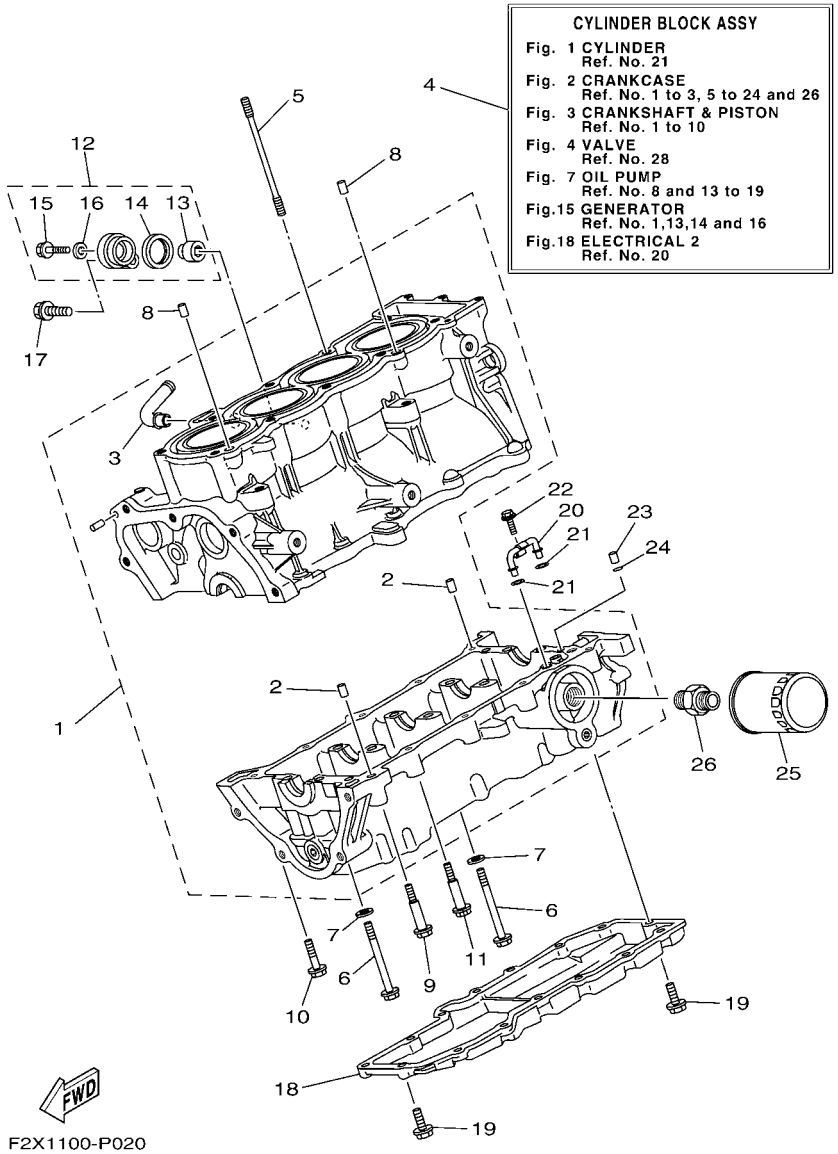

FIG. 2 CRANKCASE

REF. NO.	PART NO.	DESCRIPTION	CAN	EUR	GENE			REMARKS
1	6BU–15100–00	CRANKCASE ASSY	1	1	1			
2	99530–10014	.PIN, DOWEL	2	2	2			
3	6D3–51129–00	.NIPPLE	1	1	1			
4	6BU–W009B–00–94	CYLINDER BLOCK ASSY	1	1	1			
5	90116–10058	BOLT, STUD	10	10	10			
6	90105–093A5	BOLT, FLANGE	10	10	10			
7	90201–096J9	WASHER, PLATE	10	10	10			
8	99530–10014	PIN, DOWEL	2	2	2			
9	90109–06051	BOLT	2	2	2			
10	95814–06070	BOLT, FLANGE	1	1	1			
11	90105–06M17	BOLT, FLANGE	7	7	7			
12	69J–11301–10	ANODE COVER ASSY	1	1	1			
13	68V–11325–02	.ANODE	1	1	1			
14	67F–11328–00	.GROMMET, ANODE	1	1	1			
15	90105–06M07	.BOLT, FLANGE	1	1	1			
16	90430–06M03	.GASKET	1	1	1			
17	97595–08540	BOLT, WITH WASHER	1	1	1			
18	6B6–1310A–01–94	PAN, OIL	1	1	1			
19	97513–06520	BOLT, WITH WASHER	15	15	15			
20	60E–13161–00	PIPE, DELIVERY 1	1	1	1			
21	93210–06667	O-RING	2	2	2			
22	95027–06010	BOLT, FLANGE	1	1	1			
23	99530–08012	PIN, DOWEL	1	1	1			
24	93210–08001	O-RING	1	1	1			
25	5GH–13440–50	ELEMENT ASSY, OIL CLEANER	1	1	1			
26	90401–20007	BOLT, UNION	1	1	1			

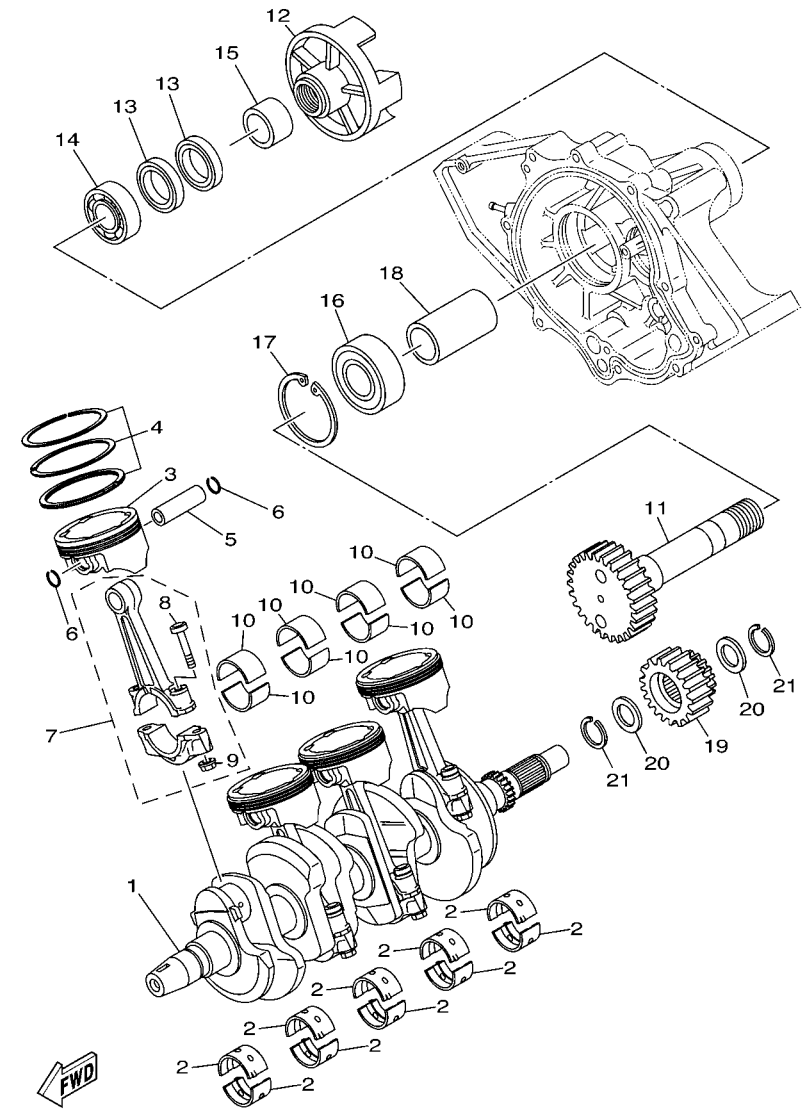

F1K1100-D030

FIG. 3 CRANKSHAFT & PISTON

REF. NO.	PART NO.	DESCRIPTION	CAN	EUR	GENE			REMARKS
1	60E–11411–11	CRANKSHAFT	1	1	1			
2	6D3–11416–A0	PLANE BEARING, CRANKSHAFT 1	10	10	10			UR RED/RED
	6D3–11416–00	PLANE BEARING, CRANKSHAFT 1	10	10	10			UR RED/BROWN
	6D3–11416–10	PLANE BEARING, CRANKSHAFT 1	10	10	10			UR RED/BLACK
	6D3–11416–20	PLANE BEARING, CRANKSHAFT 1	10	10	10			UR RED/BLUE
	6D3–11416–30	PLANE BEARING, CRANKSHAFT 1	10	10	10			UR RED/GREEN
3	6D3–11631–01–B0	PISTON (STD)	4	4	4			
4	6D3–11603–00	PISTON RING SET (STD)	4	4	4			
5	6D3–11633–00	PIN, PISTON	4	4	4			
6	90468–12069	CLIP	8	8	8			
7	6D3–11650–00	CONNECTING ROD ASSY	4	4	4			
8	5JW–11654–00	.BOLT, CONNECTING ROD	2	2	2			
9	90179–08327	.NUT	2	2	2			
10	60E–11656–00	PLANE BEARING, CONNECTING ROD	8	8	8			UR BROWN
	60E–11656–10	PLANE BEARING, CONNECTING ROD	8	8	8			UR BLACK
	60E–11656–20	PLANE BEARING, CONNECTING ROD	8	8	8			UR BLUE
	60E–11656–30	PLANE BEARING, CONNECTING ROD	8	8	8			UR GREEN
11	6D3–17572–00	SHAFT, TRANSFER	1	1	1			
12	6D3–45813–00–94	FLANGE, COUPLING	1	1	1			
13	93101–35004	OIL SEAL	2	2	2			
14	93306–07801	BEARING	1	1	1			
15	6B6–11478–00	COLLAR	1	1	1			
16	93306–30610	BEARING	1	1	1			
17	99009–72500	CIRCLIP	1	1	1			
18	6B6–17585–00	COLLAR, GEAR	1	1	1			
19	6B6–17586–00	GEAR, TRANSFER DRIVE	1	1	1			
20	90209–25008	WASHER	2	2	2			

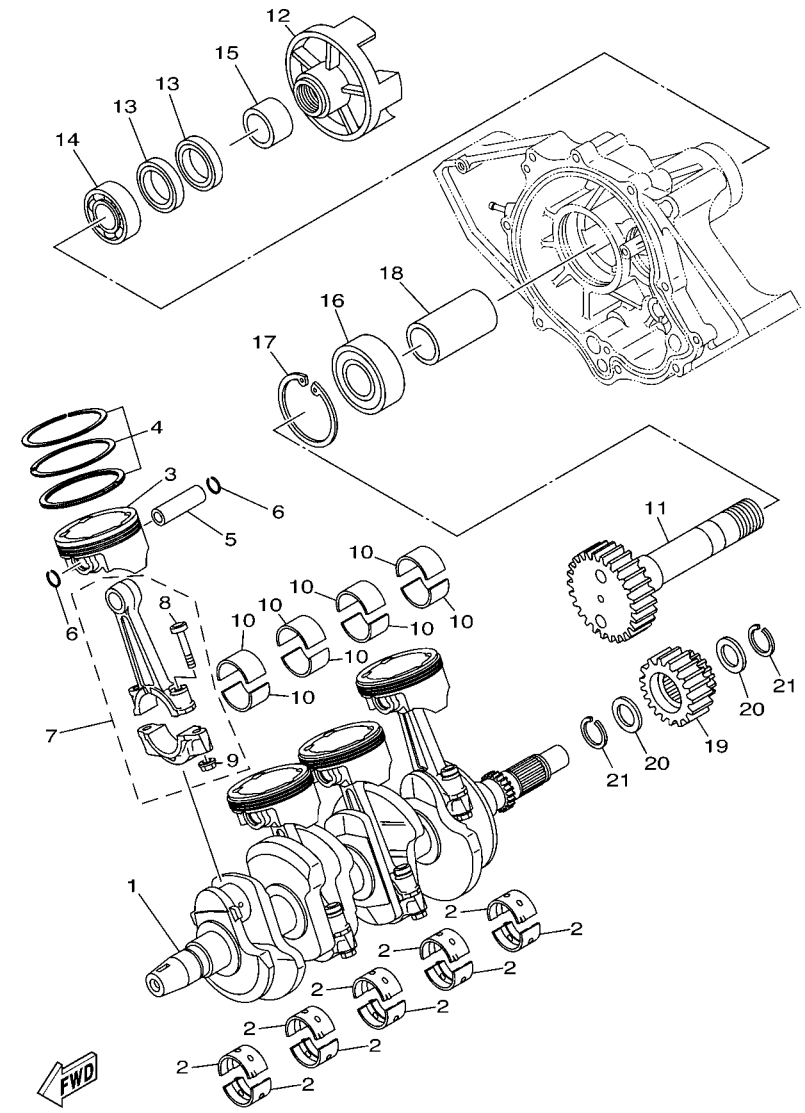

F1K1100-D030

FIG. 3 CRANKSHAFT & PISTON

REF. NO.	PART NO.	DESCRIPTION	CAN	EUR	GENE			REMARKS
21	93440–28062	CIRCLIP	2	2	2			

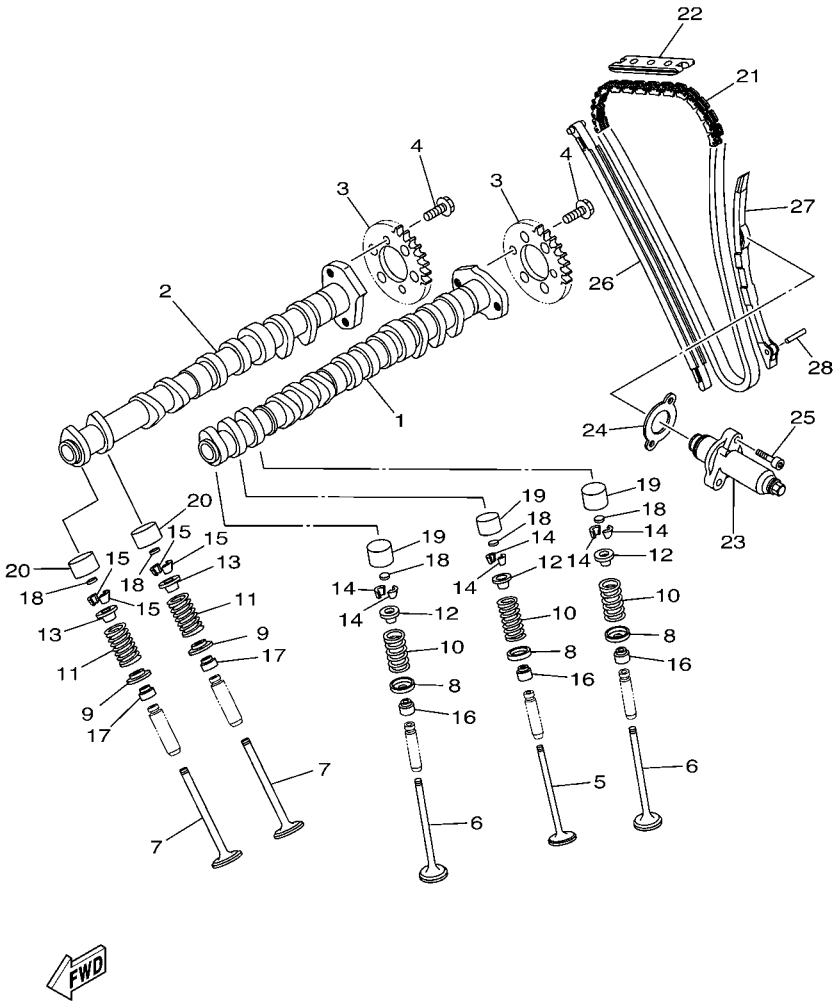

F1K1100-D040

FIG. 4 VALVE

REF. NO.	PART NO.	DESCRIPTION	CAN	EUR	GENE			REMARKS
1	6D3–12171–11	CAMSHAFT 1	1	1	1			
2	6D3–12181–00	CAMSHAFT 2	1	1	1			
3	6D3–12176–00	SPROCKET, CAM CHAIN	2	2	2			
4	90105–07004	BOLT, FLANGE	4	4	4			
5	4XV–12111–00	VALVE, INTAKE	4	4	4			
6	4XV–12112–00	VALVE, INTAKE 2	8	8	8			
7	5LV–12121–00	VALVE, EXHAUST	8	8	8			
8	1HX–12116–01	SEAT, VALVE SPRING	12	12	12			
9	3GM–12126–00	SEAT, VALVE SPRING 2	8	8	8			
10	4XV–12113–00	SPRING, VALVE INNER	12	12	12			
11	4XV–12114–00	SPRING, VALVE OUTER	8	8	8			
12	1HX–12117–00	RETAINER, VALVE SPRING	12	12	12			
13	1WG–12117–00	RETAINER, VALVE SPRING	8	8	8			
14	1HX–12118–00	LOCK, VALVE SPRING RETAINER	24	24	24			
15	1WG–12118–00	LOCK, VALVE SPRING RETAINER	16	16	16			
16	4TV–12119–00	SEAL, VALVE STEM	12	12	12			
17	4SV–12119–00	SEAL, VALVE STEM	8	8	8			
18	1HX–12168–00	PAD, ADJUSTING 2 (1.20)	20	20	20			UR
	1HX–12168–20	PAD, ADJUSTING 2 (1.25)	20	20	20			UR
	1HX–12168–40	PAD, ADJUSTING 2 (1.30)	20	20	20			UR
	1HX–12168–60	PAD, ADJUSTING 2 (1.35)	20	20	20			UR
	1HX–12168–80	PAD, ADJUSTING 2 (1.40)	20	20	20			UR
	1HX–12168–A0	PAD, ADJUSTING 2 (1.45)	20	20	20			UR
	1HX–12168–F0	PAD, ADJUSTING 2 (1.50)	20	20	20			UR
	1HX–12168–H1	PAD, ADJUSTING 2 (1.55)	20	20	20			UR
	1HX–12168–K1	PAD, ADJUSTING 2 (1.60)	20	20	20			UR
	1HX–12168–M1	PAD, ADJUSTING 2 (1.65)	20	20	20			UR

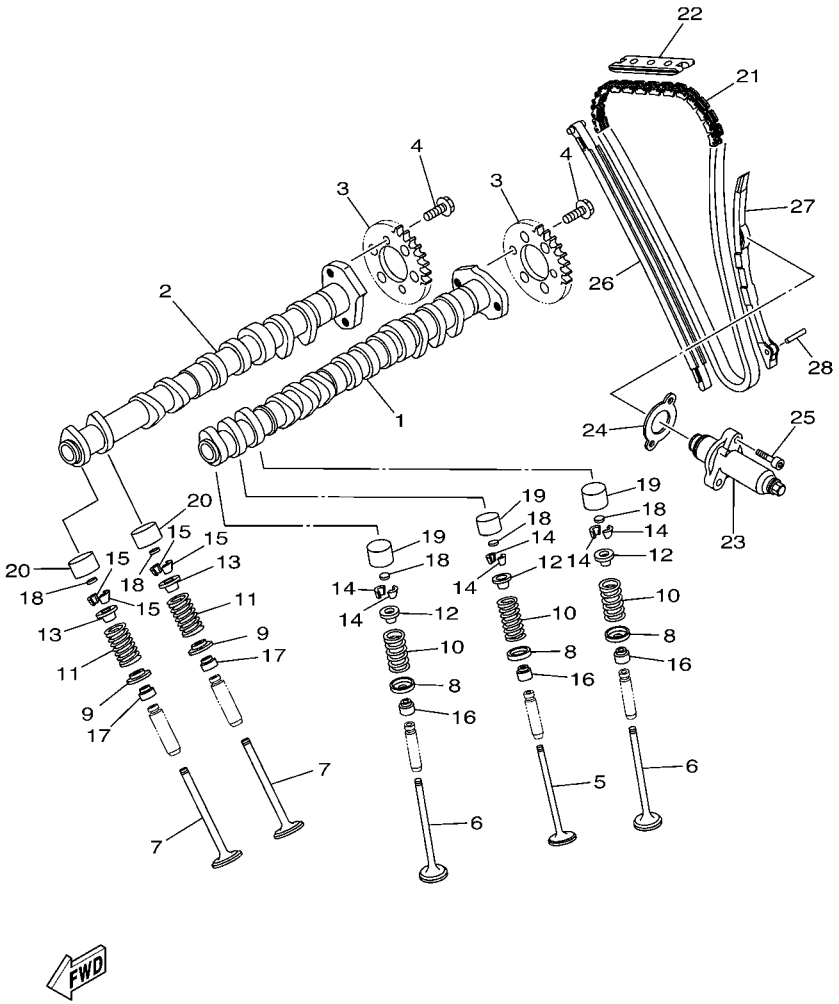

F1K1100-D040

FIG. 4 VALVE

REF. NO.	PART NO.	DESCRIPTION	CAN	EUR	GENE			REMARKS
18	1HX–12168–R1	PAD, ADJUSTING 2 (1.70)	20	20	20			UR
	1HX–12168–U1	PAD, ADJUSTING 2 (1.75)	20	20	20			UR
	1HX–12168–W1	PAD, ADJUSTING 2 (1.80)	20	20	20			UR
	1HX–12168–Y1	PAD, ADJUSTING 2 (1.85)	20	20	20			UR
	1HX–12169–11	PAD, ADJUSTING 2 (1.90)	20	20	20			UR
	1HX–12169–31	PAD, ADJUSTING 2 (1.95)	20	20	20			UR
	1HX–12169–50	PAD, ADJUSTING 2 (2.00)	20	20	20			UR
	1HX–12169–70	PAD, ADJUSTING 2 (2.05)	20	20	20			UR
	1HX–12169–90	PAD, ADJUSTING 2 (2.10)	20	20	20			UR
	1HX–12169–E0	PAD, ADJUSTING 2 (2.15)	20	20	20			UR
	1HX–12169–G0	PAD, ADJUSTING 2 (2.20)	20	20	20			UR
	1HX–12169–J0	PAD, ADJUSTING 2 (2.25)	20	20	20			UR
	1HX–12169–L0	PAD, ADJUSTING 2 (2.30)	20	20	20			UR
	1HX–12169–N0	PAD, ADJUSTING 2 (2.35)	20	20	20			UR
	1HX–12169–T0	PAD, ADJUSTING 2 (2.40)	20	20	20			UR
19	3LN–12153–10	LIFTER, VALVE	12	12	12			YELLOW
20	3FV–12153–10	LIFTER, VALVE	8	8	8			YELLOW
21	94591–49130	CHAIN	1	1	1			
22	5BE–12241–00	GUIDE, STOPPER 2	1	1	1			
23	6D3–12210–00	TENSIONER ASSY, CAM CHAIN	1	1	1			
24	4FM–12213–00	GASKET, TENSIONER CASE	1	1	1			
25	91380–06025	BOLT	2	2	2			
26	6D3–12251–00	DAMPER, CHAIN 1	1	1	1			
27	4XV–12252–00	DAMPER, CHAIN 2	1	1	1			
28	93607–44002	PIN, DOWEL	1	1	1			

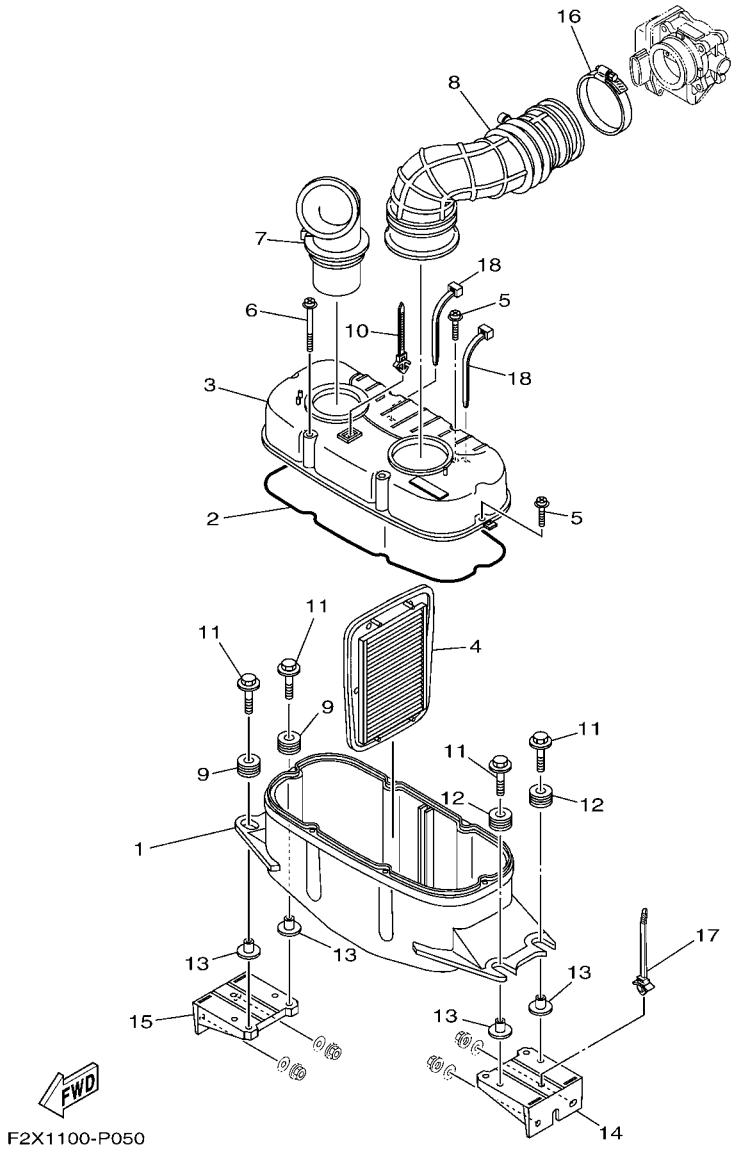

FIG. 5 INTAKE

REF. NO.	PART NO.	DESCRIPTION	CAN	EUR	GENE			REMARKS
1	6D3–14411–00	CASE, AIR CLEANER 1	1	1	1			
2	4XV–14452–00	SEAL	1	1	1			
3	6D3–14421–02	CASE, AIR CLEANER 2	1	1	1			
4	6D3–14451–00	ELEMENT, AIR CLEANER	1	1	1			
5	90159–05013	SCREW, WITH WASHER	4	4	4			
6	90159–05014	SCREW, WITH WASHER	2	2	2			
7	6D3–14437–00	DUCT	1	1	1			
8	6D3–14419–01	PIPE	1	1	1			
9	90480–22M15	GROMMET	2	2	2			
10	90464–12089	CLAMP	1	1	1			
11	90119–08M22	BOLT, WITH WASHER	4	4	4			
12	90480–22M15	GROMMET	2	2	2			
13	90387–08M37	COLLAR	4	4	4			
14	F2N–U8572–00	BRACKET 2	1	1	1			
15	F2N–U8572–00	BRACKET 2	1	1	1			
16	90601–175UR	BAND, HOSE 75	1	1	1			
17	90464–38800	CLAMP	1	1	1			
18	90464–40825	CLAMP	2	2	2			

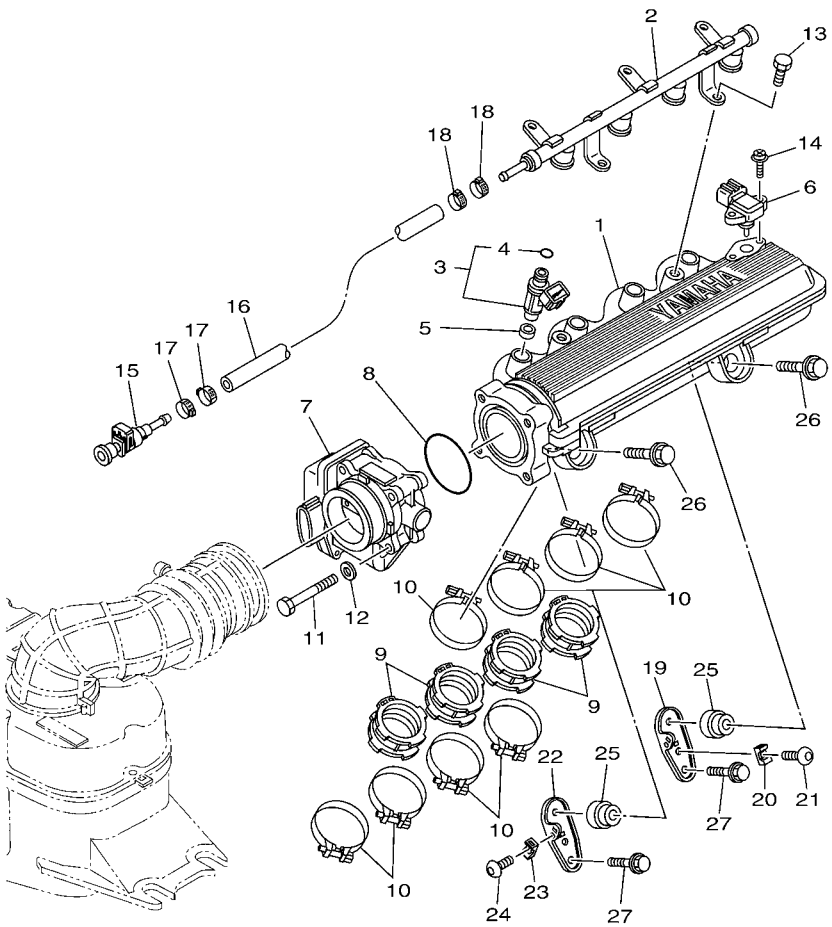

F2X1100-P060

FIG. 6 INTAKE 2

REF. NO.	PART NO.	DESCRIPTION	CAN	EUR	GENE			REMARKS
1	6D3–13641–00	MANIFOLD, INTAKE 1	1	1	1			
2	6BU–12880–11	DELIVERY PIPE	1	1	1			
3	60E–13761–20	INJECTOR	4	4	4			
4	68V–1416A–00	.O-RING	1	1	1			
5	8FP–13556–10	GASKET, MANIFOLD	4	4	4			
6	68F–83688–10	SENSOR ASSY	1	1	1			
7	6BU–13750–00	THROTTLE BODY ASSY	1	1	1			
8	6D3–14457–00	SEAL	1	1	1			
9	6D3–13795–01	JOINT, THROTTLE BODY 1	4	4	4			
10	90450–57006	HOSE CLAMP ASSY	8	8	8			
11	68V–13573–00	BOLT 1	4	4	4			
12	68V–14475–00	WASHER	4	4	4			
13	63P–14446–00	BOLT	2	2	2			
14	6D3–81147–00	SCREW 3	2	2	2			
15	6S5–24300–01	FUEL PIPE JOINT	1	1	1			
16	6D3–14294–10	HOSE	1	1	1			
17	90450–17M17	HOSE CLAMP ASSY	2	2	2			
18	90450–17M17	HOSE CLAMP ASSY	2	2	2			
19	6EX–14414–00	STAY 2	1	1	1			
20	60E–1244E–00	BRACKET 1	1	1	1			
21	92014–06012	BOLT, BUTTON HEAD	1	1	1			
22	6EX–14414–10	STAY 2	1	1	1			
23	60E–1244E–00	BRACKET 1	1	1	1			
24	92014–06012	BOLT, BUTTON HEAD	1	1	1			
25	60E–14449–00–94	COLLAR	2	2	2			
26	90119–08050	BOLT, WITH WASHER	2	2	2			
27	90119–08074	BOLT, WITH WASHER	2	2	2			

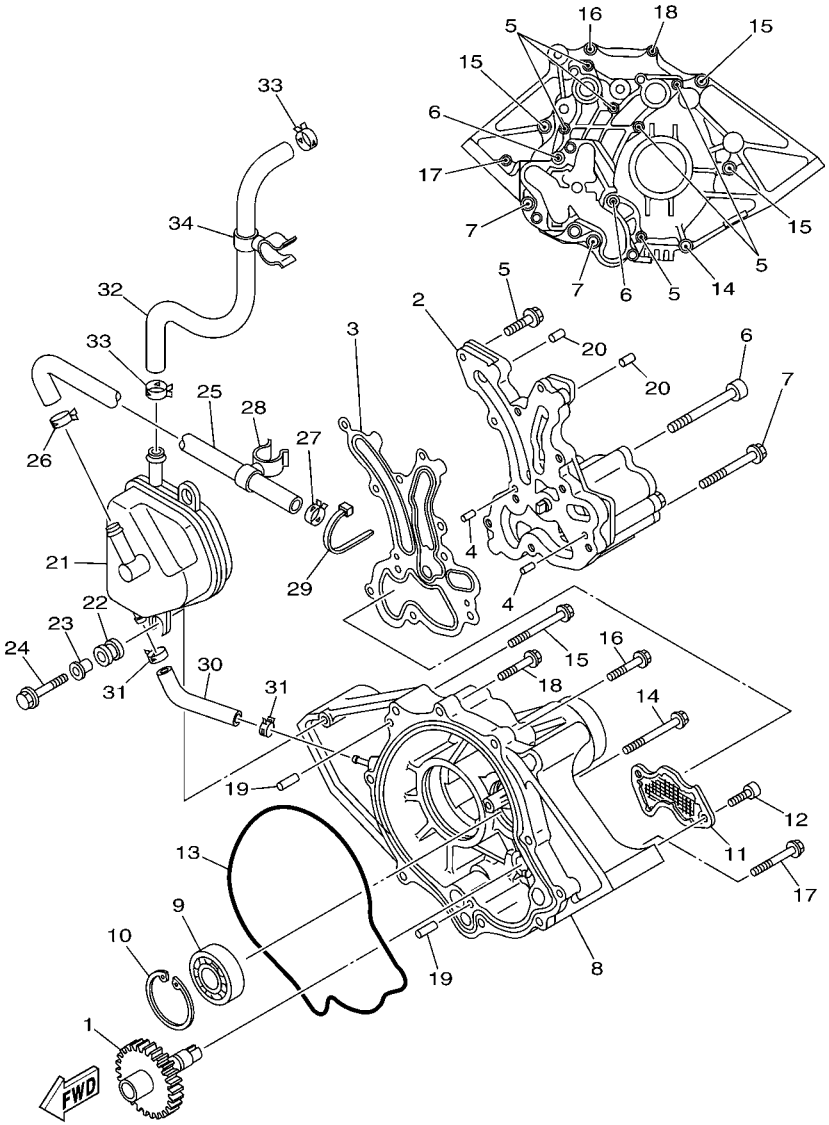

F2L1100-H070

FIG. 7 OIL PUMP

REF. NO.	PART NO.	DESCRIPTION	CAN	EUR	GENE			REMARKS
1	6B6–13360–00	DRIVEN GEAR ASSY	1	1	1			
2	6D3–13300–10	OIL PUMP ASSY	1	1	1			
3	6B6–13563–01	GASKET	1	1	1			
4	93603–12221	PIN, DOWEL	2	2	2			
5	97513–06525	BOLT, WITH WASHER	6	6	6			
6	90110–08041	BOLT, HEXAGON SOCKET HEAD	2	2	2			
7	90119–08085	BOLT, WITH WASHER	2	2	2			
8	6B6–13327–02–94	COVER, PUMP GEAR	1	1	1			
9	93306–30441	BEARING	1	1	1			
10	99009–52500	CIRCLIP	1	1	1			
11	6B6–13411–00	STRAINER, OIL	1	1	1			
12	91317–06016	BOLT	2	2	2			
13	6B6–13475–01	GASKET	1	1	1			
14	90119–08045	BOLT, WITH WASHER	1	1	1			
15	90119–08034	BOLT, WITH WASHER	3	3	3			
16	90119–08043	BOLT, WITH WASHER	1	1	1			
17	97513–06555	BOLT, WITH WASHER	1	1	1			
18	97513–06535	BOLT, WITH WASHER	1	1	1			
19	93608–16M16	PIN, DOWEL	2	2	2			
20	93606–25M00	PIN, DOWEL	2	2	2			
21	6D3–11164–00	SEPERATOR, OIL	1	1	1			
22	6A0–82317–00	DAMPER, IGNITION COIL	2	2	2			
23	90387–06119	COLLAR	2	2	2			
24	90119–06M65	BOLT, WITH WASHER	2	2	2			
25	6D3–11126–00	PIPE, BREATHER 3	1	1	1			
26	90467–170A4	CLIP	1	1	1			
27	90467–170A4	CLIP	1	1	1			

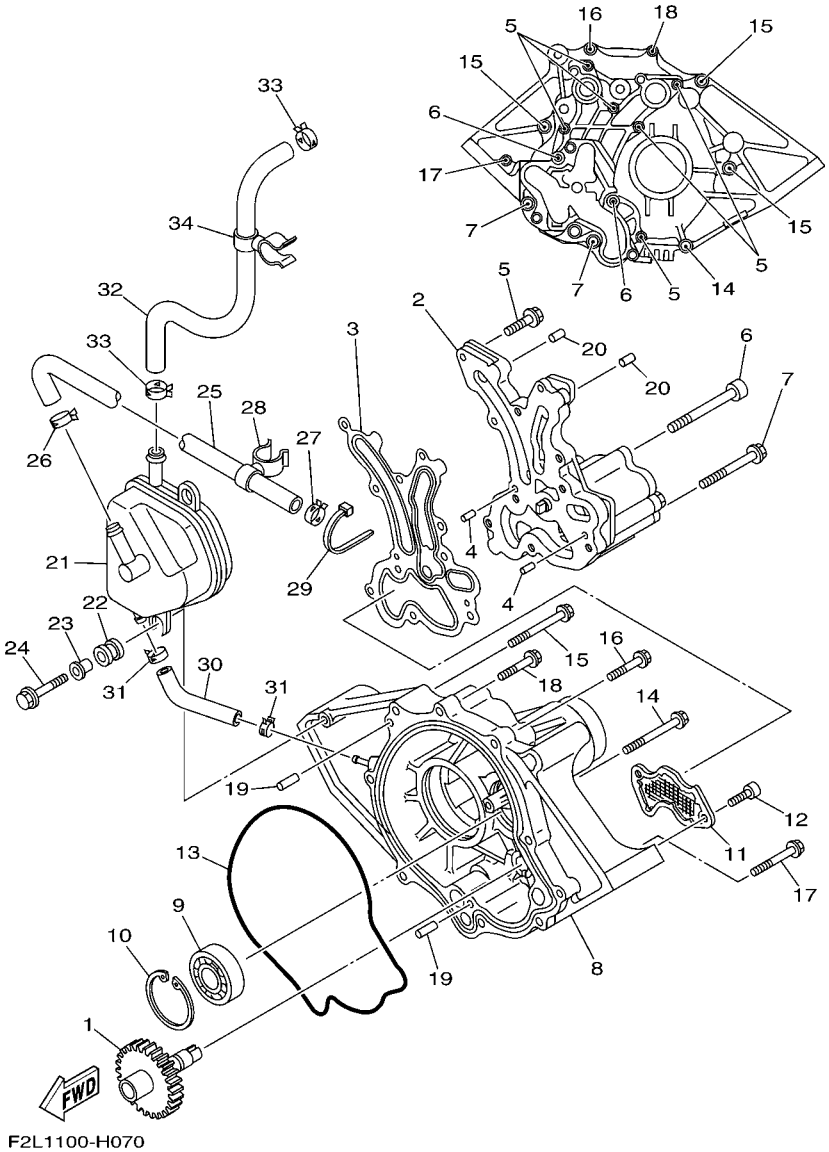

FIG. 7 OIL PUMP

REF. NO.	PART NO.	DESCRIPTION	CAN	EUR	GENE			REMARKS
28	90464–21001	CLAMP	1	1	1			
29	90464–21001	CLAMP	1	1	1			
30	6D3–11125–00	PIPE, BREATHER 4	1	1	1			
31	90467–110A1	CLIP	2	2	2			
32	6D3–11166–00	PIPE, BREATHER 1	1	1	1			
33	90467–170A4	CLIP	2	2	2			
34	90464–21001	CLAMP	1	1	1			

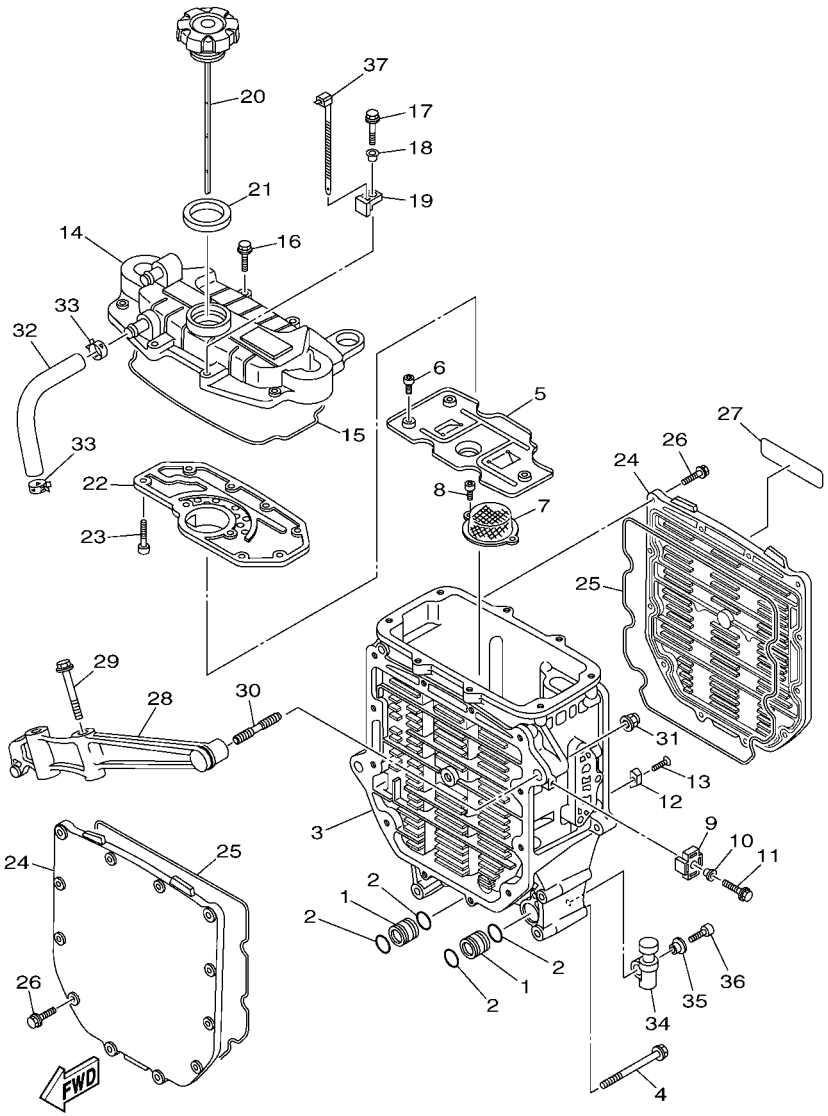

FIG. 8 OIL COOLER

REF. NO.	PART NO.	DESCRIPTION	CAN	EUR	GENE			REMARKS
1	60E–13446–00	CONNECTOR	2	2	2			
2	93210–18322	O-RING	4	4	4			
3	6D3–13462–00–94	CASE, OIL COOLER	1	1	1			
4	90119–10020	BOLT, WITH WASHER	5	5	5			
5	6B6–13317–00	PLATE, BAFFLE	1	1	1			
6	91317–05014	BOLT	3	3	3			
7	60E–13421–00	STRAINER 2	1	1	1			
8	91317–06014	BOLT	2	2	2			
9	6BU–85542–00	BRACKET	1	1	1			
10	90387–06M05	COLLAR	1	1	1			
11	97595–06520	BOLT, WITH WASHER	1	1	1			
12	6E5–11325–00	ANODE	1	1	1			
13	98780–04015	SCREW, FLAT HEAD	1	1	1			
14	6D3–13463–00–94	COVER, OIL COOLER	1	1	1			
15	60E–13475–00	GASKET	1	1	1			
16	90105–06036	BOLT, FLANGE	7	7	7			
17	90105–06035	BOLT, FLANGE	1	1	1			
18	90387–06M05	COLLAR	1	1	1			
19	6AA–85542–00	BRACKET	1	1	1			
20	6BU–15362–A0	PLUG, OIL LEVEL	1	1	1			
21	60E–13473–00	O-RING	1	1	1			
22	6D3–11165–00	PLATE, BREATHER	1	1	1			
23	91317–05016	BOLT	9	9	9			
24	6D3–13443–00–94	COVER, OIL COOLER	2	2	2			
25	60E–13476–10	GASKET	2	2	2			
26	90105–06M07	BOLT, FLANGE	24	24	24			
27	60E–83627–00	LABEL, CAUTION 7	1	1	1			

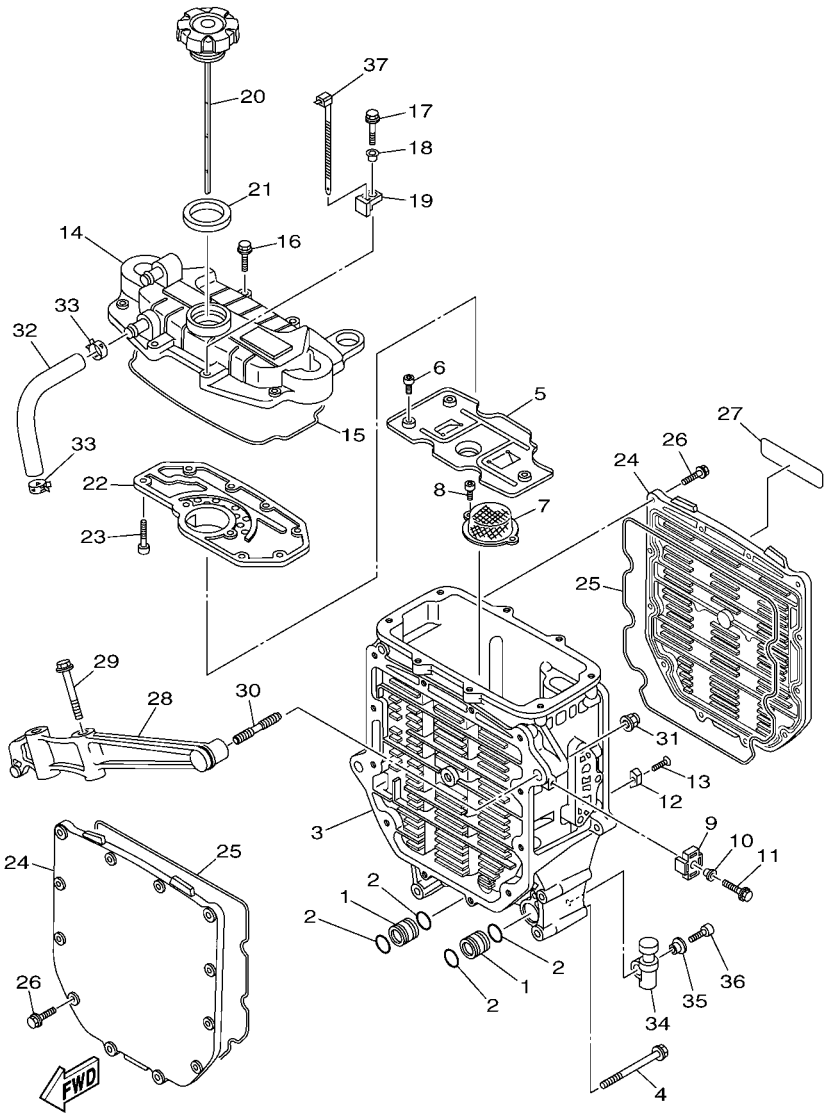

FIG. 8 OIL COOLER

REF. NO.	PART NO.	DESCRIPTION	CAN	EUR	GENE			REMARKS
28	6B6–13151–00–94	STAY	1	1	1			
29	90119–10M02	BOLT, WITH WASHER	2	2	2			
30	90116–10016	BOLT, STUD	2	2	2			
31	90176–10001	NUT, CROWN	2	2	2			
32	6D3–11167–00	PIPE, BREATHER 2	1	1	1			
33	90467–170A4	CLIP	2	2	2			
34	6S5–81364–10	GROMMET	2	2	2			
35	90387–06M05	COLLAR	2	2	2			
36	91380–06020	BOLT	2	2	2			
37	90465–13M39	CLAMP	1	1	1			

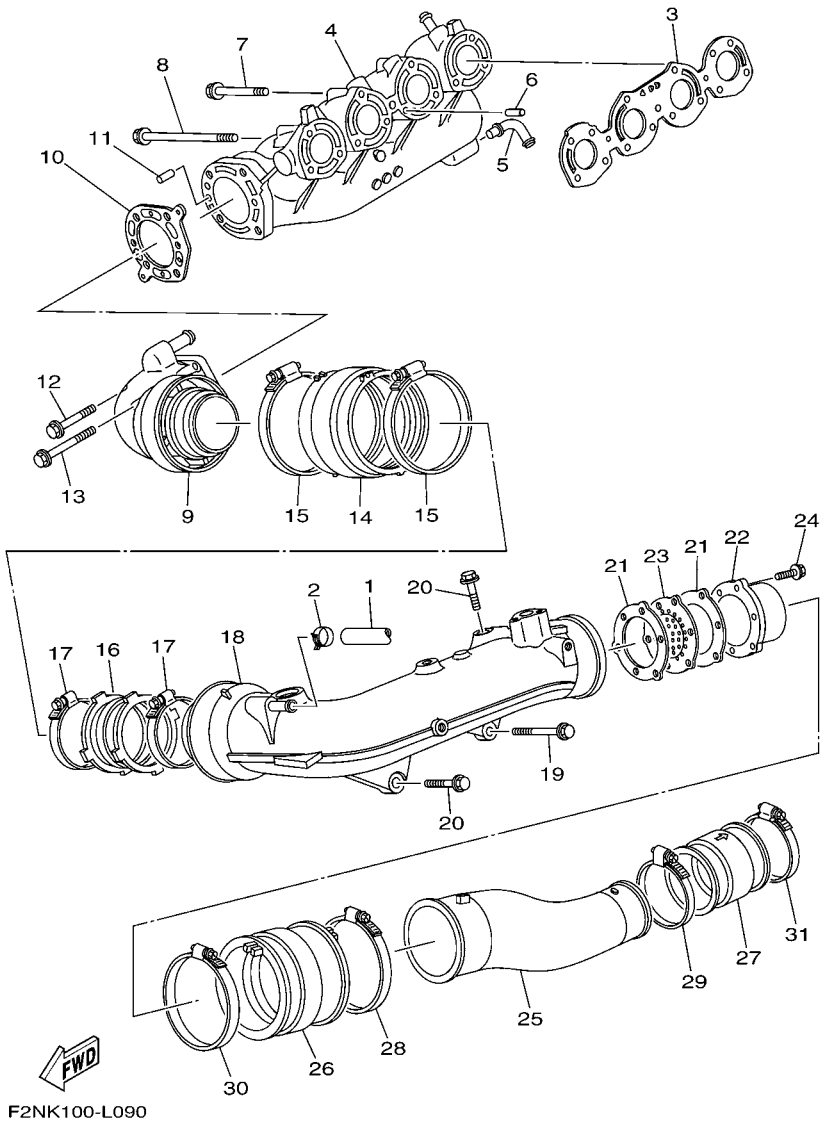

FIG. 9 EXHAUST 1

REF. NO.	PART NO.	DESCRIPTION	CAN	EUR	GENE			REMARKS
1	6BU–1244G–10	HOSE, 4	1	1	1			
2	90467–160A0	CLIP	1	1	1			
3	6D3–14613–10	GASKET, EXHAUST PIPE	1	1	1			
4	6D3–14711–10	MUFFLER 1	1	1	1			
5	60E–11372–10	NIPPLE, HOSE	1	1	1			
6	93608–16M16	PIN, DOWEL	2	2	2			
7	90119–08036	BOLT, WITH WASHER	5	5	5			
8	90119–08075	BOLT, WITH WASHER	6	6	6			
9	6D3–14712–00–94	RING, JOINT	1	1	1			
10	6D3–14739–10	GASKET, MUFFLER DAMPER 1	1	1	1			
11	93606–12019	PIN, DOWEL	2	2	2			
12	90119–08036	BOLT, WITH WASHER	2	2	2			
13	90119–08031	BOLT, WITH WASHER	2	2	2			
14	6D3–14615–00	JOINT, EXHAUST 1	1	1	1			
15	90450–99005	HOSE CLAMP ASSY	2	2	2			
16	6D3–14625–00	JOINT, EXHAUST 2	1	1	1			
17	90450–90001	HOSE CLAMP ASSY	2	2	2			
18	6D3–14721–10	MUFFLER 2	1	1	1			
19	90119–10017	BOLT, WITH WASHER	1	1	1			
20	90119–10013	BOLT, WITH WASHER	3	3	3			
21	60E–14623–00	GASKET, EXHAUST PIPE	2	2	2			
22	60E–14784–00–94	PIPE, TAIL	1	1	1			
23	6D3–1469W–10	PLATE, SILENCER 6	1	1	1			
24	90105–06790	BOLT, FLANGE	3	3	3			
25	6BU–14752–00–94	PIPE, OUTLET	1	1	1			
26	6BU–1475E–00	PIPE 2	1	1	1			
27	6BU–1475F–00	PIPE 3	1	1	1			

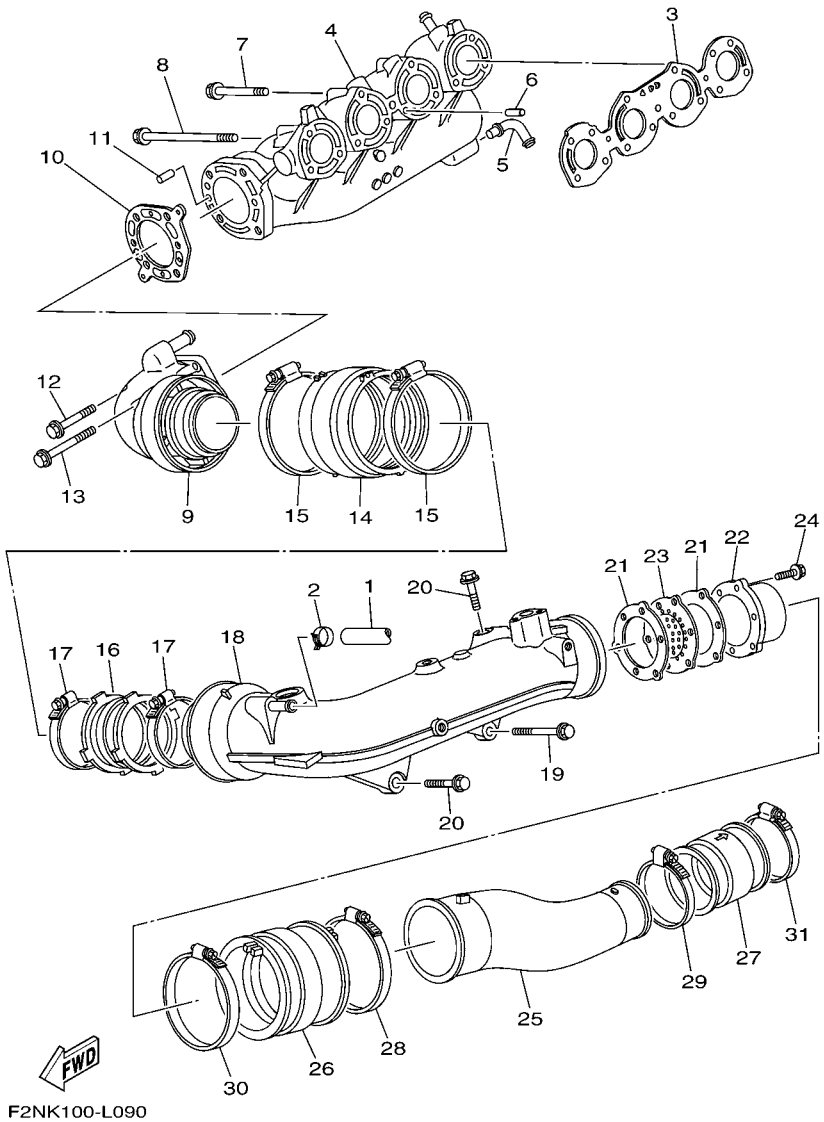

FIG. 9 EXHAUST 1

REF. NO.	PART NO.	DESCRIPTION	CAN	EUR	GENE			REMARKS
28	90450–99004	HOSE CLAMP ASSY	1	1	1			
29	90450–94001	HOSE CLAMP ASSY	1	1	1			
30	90450–99004	HOSE CLAMP ASSY	1	1	1			
31	90450–94001	HOSE CLAMP ASSY	1	1	1			

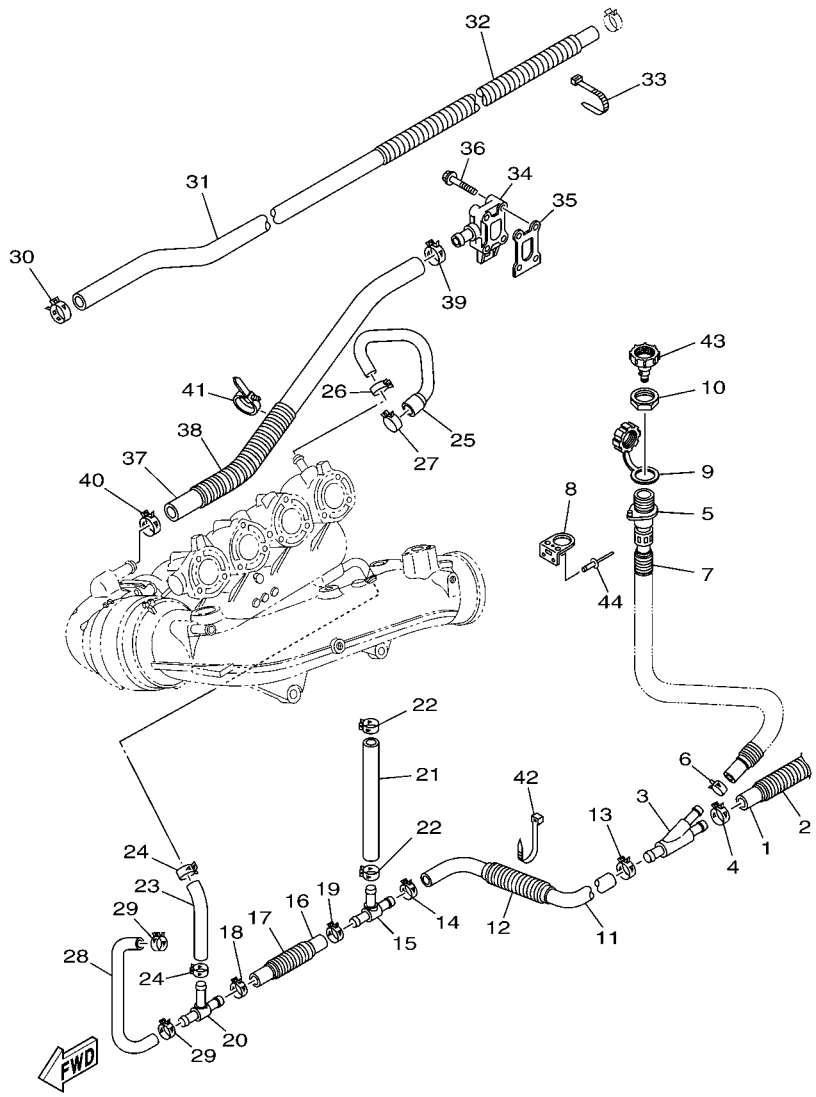

F2NG100-K100

FIG. 10 EXHAUST 2

REF. NO.	PART NO.	DESCRIPTION	CAN	EUR	GENE			REMARKS
1	90445–21805	HOSE (L300)	1		1			
2	90447–22004	HOSE, WITH SPRING (L200)	1		1			
3	60E–12581–00	JOINT, HOSE 1	1		1			
4	90467–200A3	CLIP	1		1			
5	63M–12580–00	JOINT ASSY	1		1			
6	90467–150A5	CLIP	1		1			
7	90447–19801	TUBE (L485)	1		1			
8	60E–12443–00	STAY	1		1			
9	682–84385–01	CAP,1	1		1			
10	EU0–61652–00	NUT	1		1			
11	6BU–1243A–00	HOSE 1	1		1			
12	90447–22003	HOSE, WITH SPRING (L300)	1		1			
13	90467–200A3	CLIP	1		1			
14	90467–200A3	CLIP	1		1			
15	60E–12584–00	JOINT, HOSE 3	1		1			
16	6S5–12589–01	HOSE 6	1		1			
17	90447–22001	HOSE, WITH SPRING (L100)	1		1			
18	90467–200A3	CLIP	1		1			
19	90467–200A3	CLIP	1		1			
20	6D3–12584–00	JOINT, HOSE 3	1		1			
21	6D3–1244H–10	HOSE 5	1		1			
22	90467–160A0	CLIP	2		2			
23	90445–18M03	HOSE (L108)	1		1			
24	90467–160A0	CLIP	2		2			
25	6D3–12577–10	HOSE 2	1		1			
26	90467–170A4	CLIP	1		1			
27	90467–200A3	CLIP	1		1			

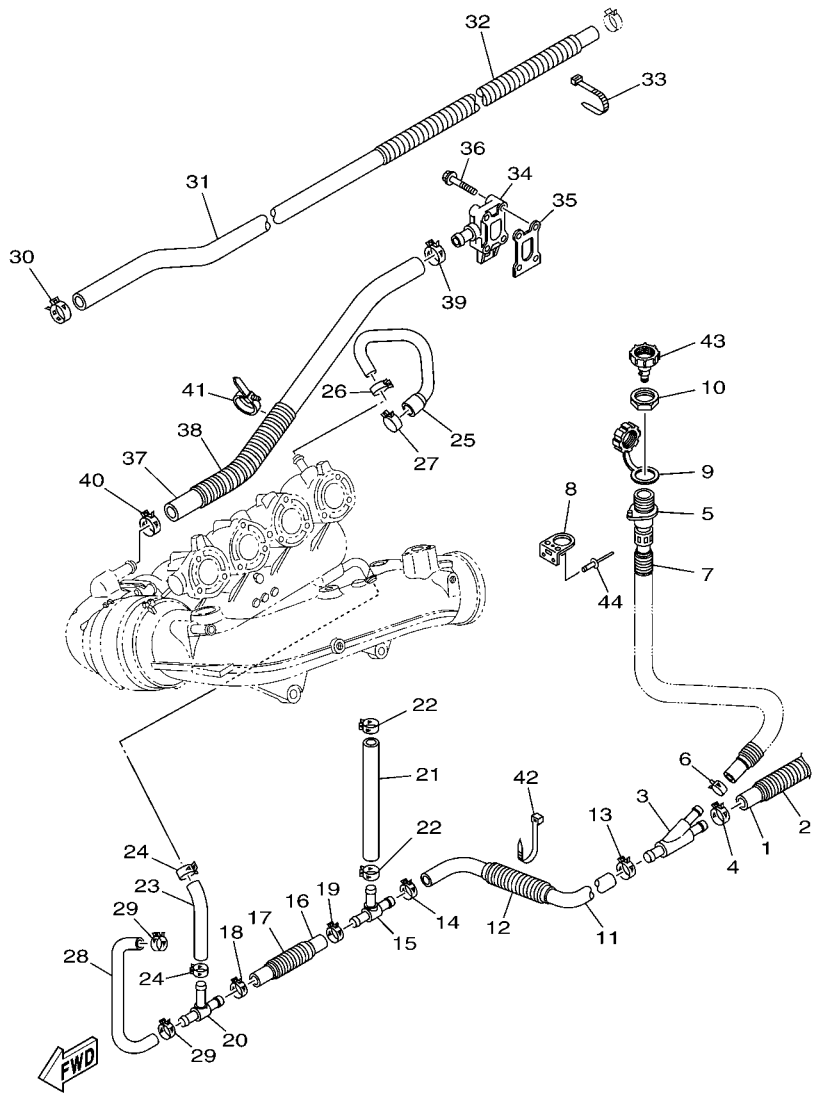

FIG. 10 EXHAUST 2

REF. NO.	PART NO.	DESCRIPTION	CAN	EUR	GENE			REMARKS
28	6D3–1244G–10	HOSE, 4	1		1			
29	90467–160A0	CLIP	2		2			
30	90467–210A0	CLIP	1		1			
31	90445–22007	HOSE (L1165)	1		1			
32	90447–25002	TUBE (L800)	1		1			
33	90464–35132	CLAMP	1		1			
34	6D3–12446–00	JOINT	1		1			
35	60E–12435–00	GASKET	1		1			
36	90105–06035	BOLT, FLANGE	4		4			
37	6BU–1243F–10	HOSE,3	1		1			
38	90447–22005	HOSE, WITH SPRING (L200)	1		1			
39	90467–200A3	CLIP	1		1			
40	90467–200A3	CLIP	1		1			
41	90464–31001	CLAMP	1		1			
42	90464–35132	CLAMP	1		1			
43	67X–E2590–10	CONDUCTION ASSY	1		1			
44	90267–489U1	RIVET,BLIND	2		2			

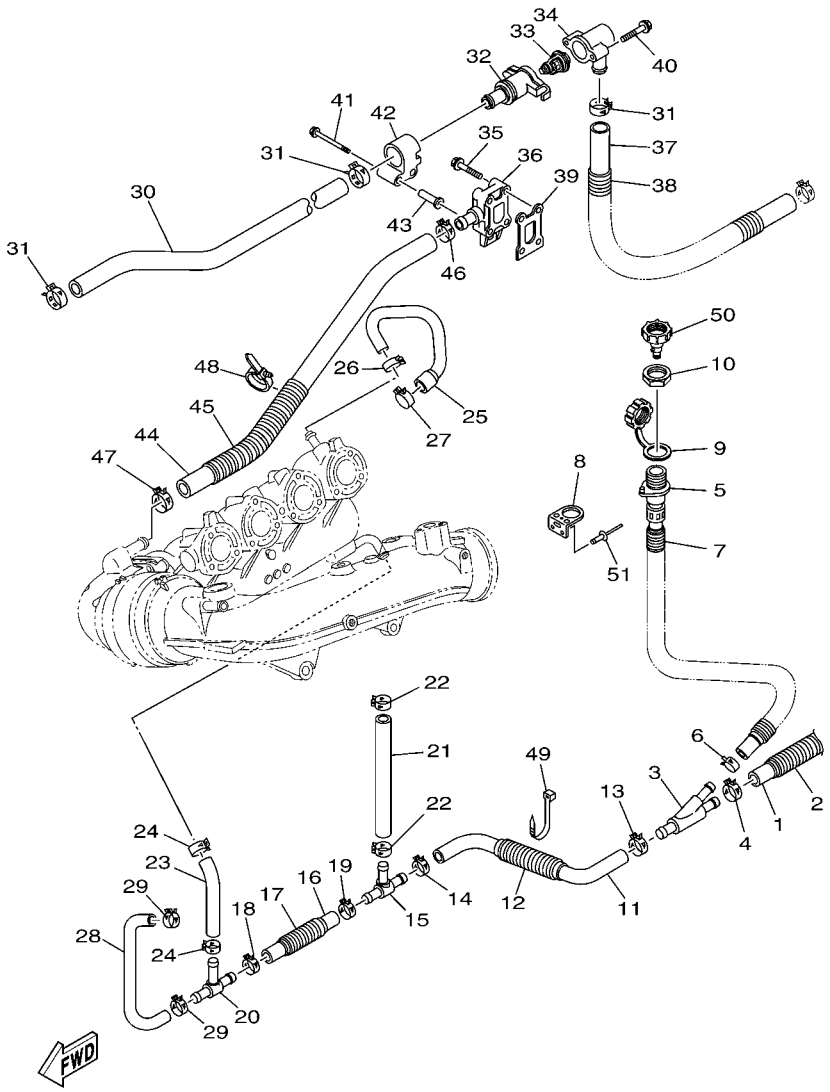

F2NG100-K110

FIG. 11 EXHAUST 3

REF. NO.	PART NO.	DESCRIPTION	CAN	EUR	GENE			REMARKS
1	90445–21805	HOSE (L300)		1				
2	90447–22004	HOSE, WITH SPRING (L200)		1				
3	60E–12581–00	JOINT, HOSE 1		1				
4	90467–200A3	CLIP		1				
5	63M–12580–00	JOINT ASSY		1				
6	90467–150A5	CLIP		1				
7	90447–19801	TUBE (L485)		1				
8	60E–12443–00	STAY		1				
9	682–84385–01	CAP,1		1				
10	EU0–61652–00	NUT		1				
11	6BU–1243A–00	HOSE 1		1				
12	90447–22003	HOSE, WITH SPRING (L300)		1				
13	90467–200A3	CLIP		1				
14	90467–200A3	CLIP		1				
15	60E–12584–00	JOINT, HOSE 3		1				
16	6S5–12589–01	HOSE 6		1				
17	90447–22001	HOSE, WITH SPRING (L100)		1				
18	90467–200A3	CLIP		1				
19	90467–200A3	CLIP		1				
20	6D3–12584–00	JOINT, HOSE 3		1				
21	6D3–1244H–10	HOSE 5		1				
22	90467–160A0	CLIP		2				
23	90445–18M03	HOSE (L108)		1				
24	90467–160A0	CLIP		2				
25	6D3–12577–10	HOSE 2		1				
26	90467–170A4	CLIP		1				
27	90467–200A3	CLIP		1				

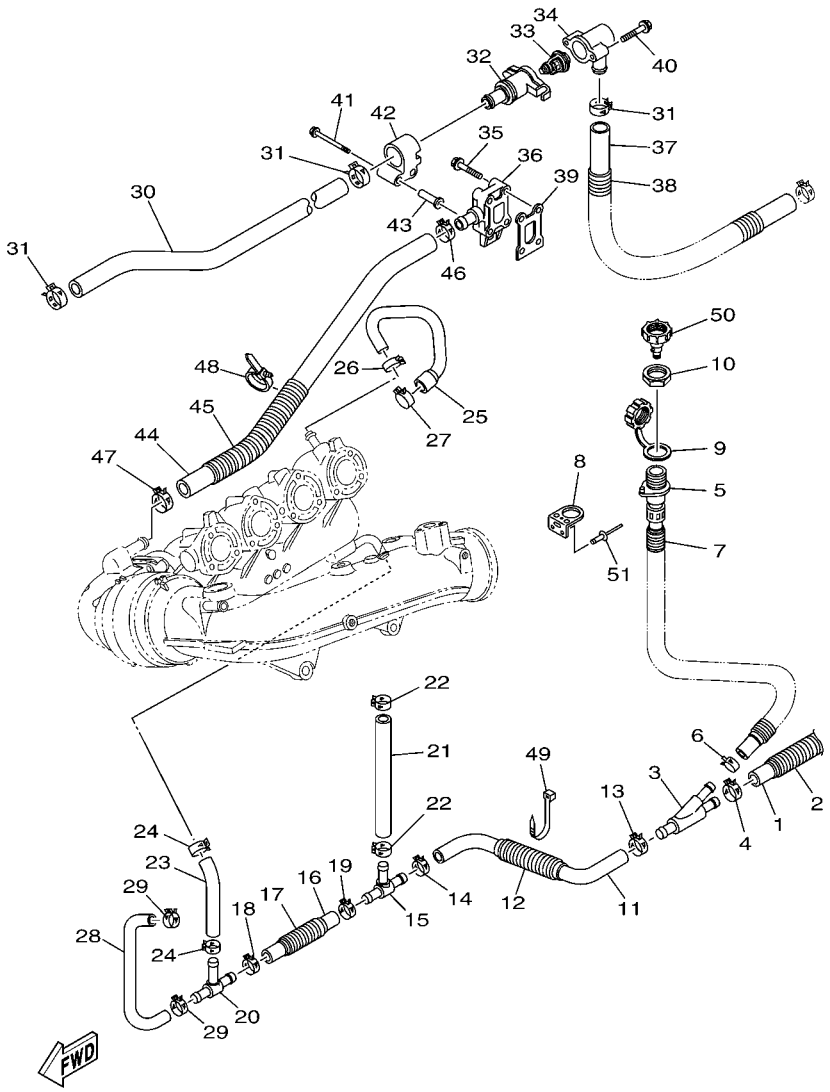

F2NG100-K110

FIG. 11 EXHAUST 3

REF. NO.	PART NO.	DESCRIPTION	CAN	EUR	GENE			REMARKS
28	6D3–1244G–10	HOSE, 4		1				
29	90467–160A0	CLIP		2				
30	90445–26004	HOSE (L375)		1				
31	90467–240A0	CLIP		3				
32	60E–12417–10	HOUSING, THERMOSTAT		1				
33	6D3–12411–00	THERMOSTAT		1				
34	6BH–12413–00	COVER, THERMOSTAT		1				
35	90105–06035	BOLT, FLANGE		2				
36	6D3–12446–00	JOINT		1				
37	90445–25006	HOSE (L760)		1				
38	90447–28010	TUBE (L650)		1				
39	60E–12435–00	GASKET		1				
40	90105–06035	BOLT, FLANGE		2				
41	90105–06054	BOLT, FLANGE		2				
42	6B6–12499–00	JOINT		1				
43	90387–06083	COLLAR		2				
44	6BU–1243F–10	HOSE,3		1				
45	90447–22005	HOSE, WITH SPRING (L200)		1				
46	90467–200A3	CLIP		1				
47	90467–200A3	CLIP		1				
48	90464–31001	CLAMP		1				
49	90464–35132	CLAMP		1				
50	67X–E2590–10	CONDUCTION ASSY		1				
51	90267–489U1	RIVET,BLIND		2				

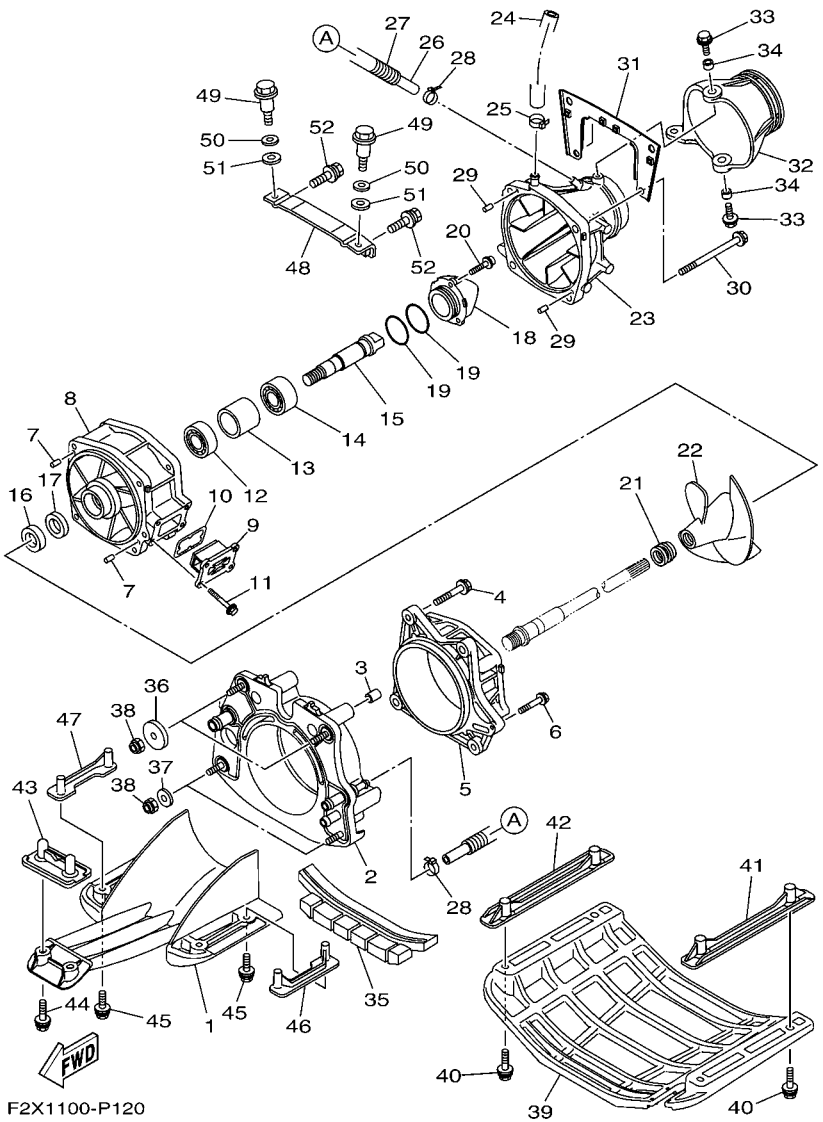

FIG. 12 JET UNIT 1

REF. NO.	PART NO.	DESCRIPTION	CAN	EUR	GENE			REMARKS
1	6EX–R1333–00	SCREEN, INTAKE	1	1	1			
2	6CS–G5831–00	PLATE, TRANSOM	1	1	1			
3	99590–14016	PIN, DOWEL	2	2	2			
4	90119–10810	BOLT, WITH WASHER	4	4	4			
5	66V–51312–01–94	HOUSING, IMPELLER	1	1	1			
6	90119–06893	BOLT, WITH WASHER	1	1	1			
7	93606–12019	PIN, DOWEL	2	2	2			
8	6B6–51315–01–94	DUCT, IMPELLER	1	1	1			
9	6EX–G6882–00	FILTER	1	1	1			
10	66V–42414–00	O-RING	1	1	1			
11	90119–06889	BOLT, WITH WASHER	4	4	4			
12	93306–27211	BEARING	1	1	1			
13	6EX–G5538–00	SPACER 1	1	1	1			
14	93306–205U0	BEARING	1	1	1			
15	6EX–45514–00	SHAFT, DRIVE 4	1	1	1			
16	93101–21001	OIL SEAL	1	1	1			
17	93101–21002	OIL SEAL	1	1	1			
18	6EX–R1326–00	CAP	1	1	1			
19	93210–464A3	O-RING	2	2	2			
20	90110–06822	BOLT, HEXAGON SOCKET HEAD	3	3	3			
21	6D3–R1319–00	CAP, IMPELLER	1	1	1			
22	6D3–R1321–02	IMPELLER	1	1	1			
23	6EX–R1318–00	NOZZLE	1	1	1			
24	6CN–U72M2–00	HOSE 1	1	1	1			
25	90601–118UF	BAND, HOSE 18	1	1	1			
26	90445–14807	HOSE (L355)	1	1	1			
27	90446–20MF5	HOSE (L320)	1	1	1			

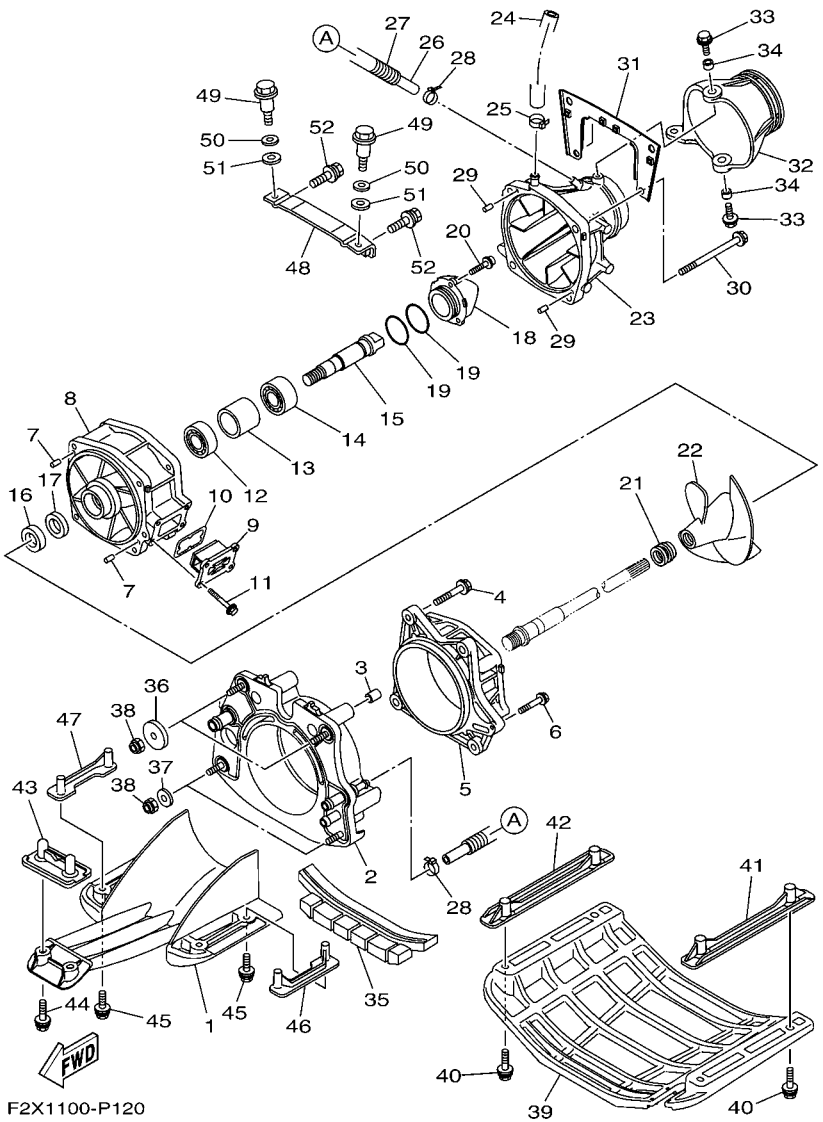

FIG. 12 JET UNIT 1

REF. NO.	PART NO.	DESCRIPTION	CAN	EUR	GENE			REMARKS
28	90465–11829	CLAMP	2	2	2			
29	93606–12019	PIN, DOWEL	2	2	2			
30	90119–10806	BOLT, WITH WASHER	4	4	4			
31	6EX–R1341–00	BRACKET 1	1	1	1			
32	6EX–R1313–00	NOZZLE, DEFLECTOR	1	1	1			
33	90119–08840	BOLT, WITH WASHER	2	2	2			
34	90387–08M06	COLLAR	2	2	2			
35	F2X–U72C0–00	SPACER	1	1	1			
36	F1S–U725E–01	WASHER	2	2	2			
37	90201–10801	WASHER, PLATE	2	2	2			
38	9572R–10300	NUT, NYLON	4	4	4			
39	F2X–U273B–00	PLATE 2	1	1	1			
40	90119–08823	BOLT, WITH WASHER	4	4	4			
41	F2X–U8572–00	BRACKET 2	1	1	1			
42	F2X–U8572–00	BRACKET 2	1	1	1			
43	F2S–U8577–00	BRACKET, 3	1	1	1			
44	90119–08823	BOLT, WITH WASHER	2	2	2			
45	90119–08823	BOLT, WITH WASHER	4	4	4			
46	F2X–U8571–00	BRACKET 1	1	1	1			
47	F2X–U8571–00	BRACKET 1	1	1	1			
48	F2C–U7557–01	BRACKET	1	1	1			
49	90109–08041	BOLT	2	2	2			
50	92990–12200	WASHER, PLAIN	2	2	2			
51	90430–12002	GASKET	2	2	2			
52	90119–089U7	BOLT, WITH WASHER	2	2	2			

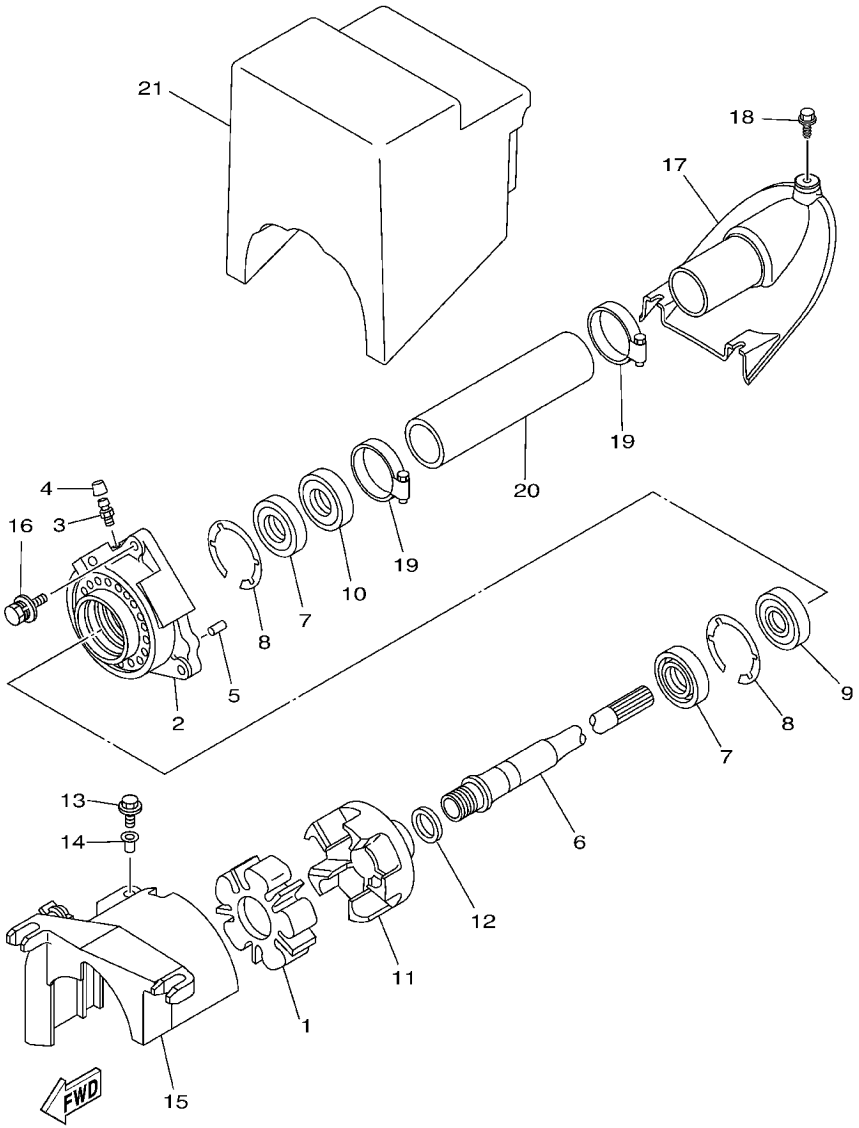

F2X1100P1301

FIG. 13 JET UNIT 2

REF. NO.	PART NO.	DESCRIPTION	CAN	EUR	GENE			REMARKS
1	6D3–4581J–00	RUBBER SHAFT COUPLING	1	1	1			
2	61X–45332–03–94	HOUSING, BEARING	1	1	1			
3	93700–06M03	NIPPLE, GREASE	1	1	1			
4	663–45119–00	CAP, GREASE NIPPLE	1	1	1			
5	93606–12019	PIN, DOWEL	2	2	2			
6	6BU–45511–00	SHAFT, DRIVE	1	1	1			
7	93101–25M55	OIL SEAL	2	2	2			
8	93430–47M04	CIRCLIP	2	2	2			
9	93306–205A3	BEARING	1	1	1			
10	93102–25009	OIL SEAL	1	1	1			
11	6D3–45593–00–94	FLANGE, COUPLING 1	1	1	1			
12	90201–24800	WASHER, PLATE	1	1	1			
13	90119–06891	BOLT, WITH WASHER	1	1	1			
14	90387–06289	COLLAR	1	1	1			
15	60E–R1381–01	COVER	1	1	1			
16	90119–089UL	BOLT, WITH WASHER	3	3	3			
17	F2N–U883E–00	JOINT, PIPE	1	1	1			
18	90109–06832	BOLT	3	3	3			
19	90601–155U4	BAND, HOSE 55	2	2	2			
20	F2N–U883B–00	PIPE, 1	1	1	1			
21	F1K–U892D–00	PAD	1	1	1			

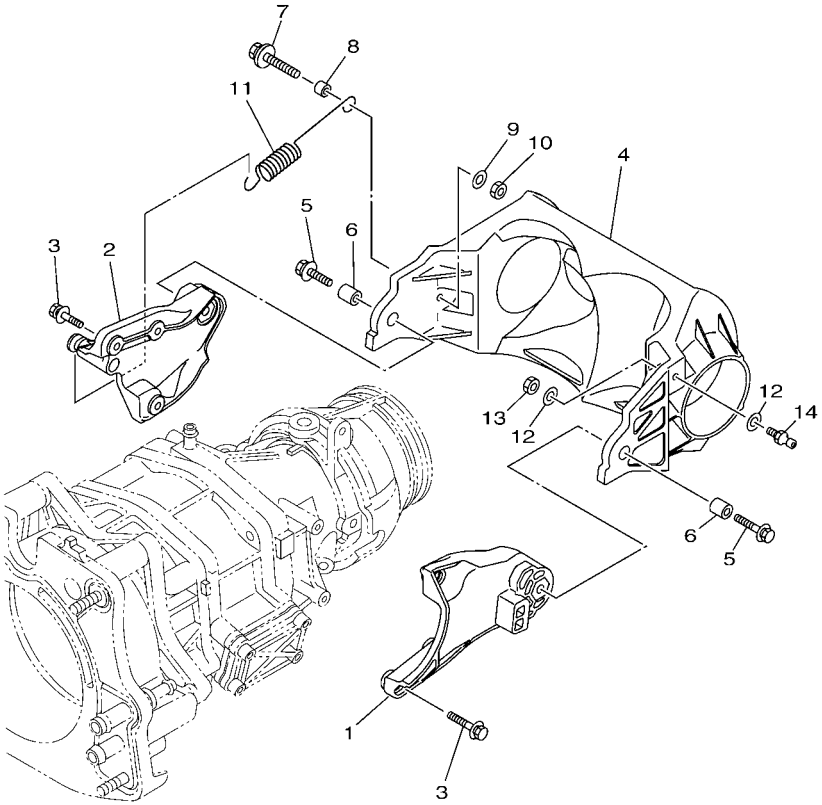

F3J7100-P170

FIG. 14 JET UNIT 3

REF. NO.	PART NO.	DESCRIPTION	CAN	EUR	GENE			REMARKS
1	6ET–R1341–00	BRACKET 1	1	1	1			
2	6ET–R1342–00	BRACKET 2	1	1	1			
3	90119–06891	BOLT, WITH WASHER	6	6	6			
4	6ET–R1314–01	GATE, REVERSE	1	1	1			
5	90119–08840	BOLT, WITH WASHER	2	2	2			
6	90387–08M30	COLLAR	2	2	2			
7	90119–069UX	BOLT, WITH WASHER	1	1	1			
8	90387–06M30	COLLAR	1	1	1			
9	90201–06801	WASHER, PLATE	1	1	1			
10	9538R–06600	NUT	1	1	1			
11	6S5–52358–00	SPRING, RETAINER	1	1	1			
12	90201–06801	WASHER, PLATE	2	2	2			
13	9538R–06600	NUT	1	1	1			
14	EU0–U1461–03	STUD, JOINT BALL	1	1	1			

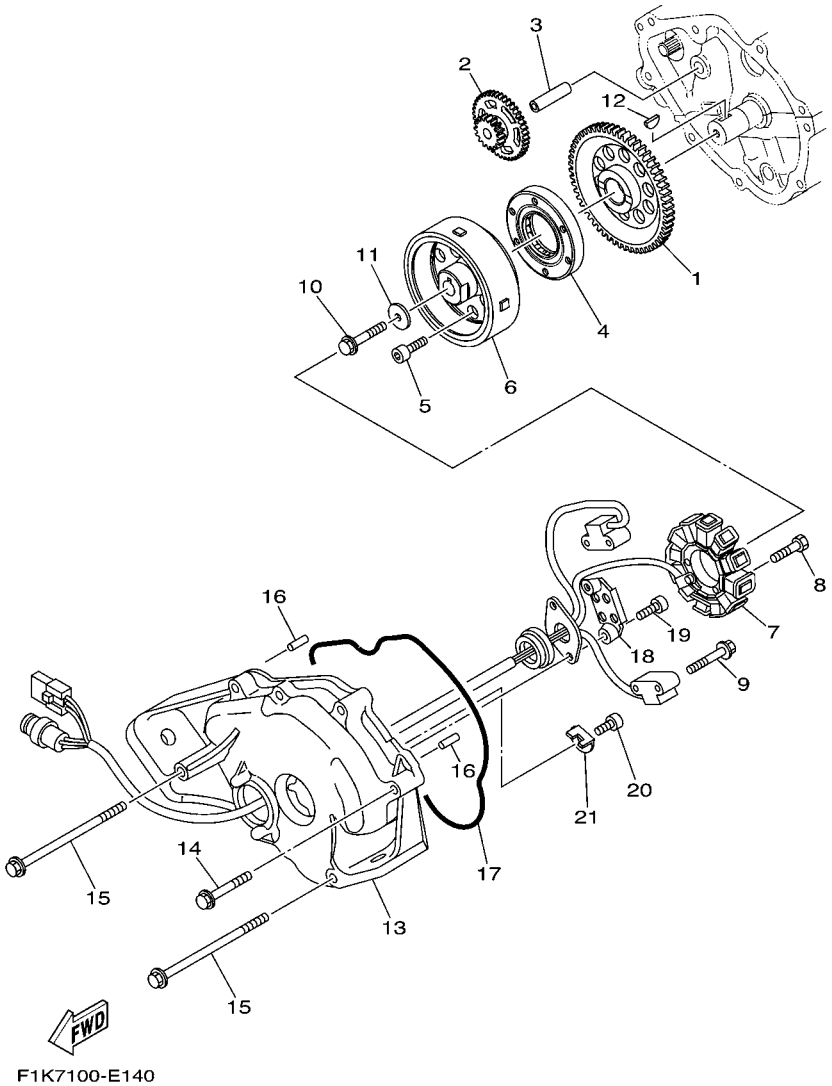

FIG. 15 GENERATOR

REF. NO.	PART NO.	DESCRIPTION	CAN	EUR	GENE			REMARKS
1	6D3–15515–00	GEAR 3	1	1	1			
2	60E–15517–00	GEAR, IDLER 2	1	1	1			
3	60E–15521–00	SHAFT 1	1	1	1			
4	4WM–15590–00	STARTER ONE-WAY ASSY	1	1	1			
5	90110–08212	BOLT, HEXAGON SOCKET HEAD	6	6	6			
6	6D3–81450–00	ROTOR ASSY	1	1	1			
7	6D3–81410–02	STATOR ASSY	1	1	1			
8	91317–06035	BOLT	3	3	3			
9	97513–05514	BOLT, WITH WASHER	2	2	2			
10	90105–105A6	BOLT, FLANGE	1	1	1			
11	90201–103U7	WASHER, PLATE	1	1	1			
12	90280–03047	KEY, WOODRUFF	1	1	1			
13	6D3–81337–00–94	COVER, FLYWHEEL	1	1	1			
14	90119–10016	BOLT, WITH WASHER	6	6	6			
15	90119–10M19	BOLT, WITH WASHER	2	2	2			
16	93608–16M16	PIN, DOWEL	2	2	2			
17	93212–04001	O-RING	1	1	1			
18	60E–81328–00	CLAMP	1	1	1			
19	91317–06014	BOLT	2	2	2			
20	91317–05010	BOLT	1	1	1			
21	6D3–81845–00	PLATE	1	1	1			

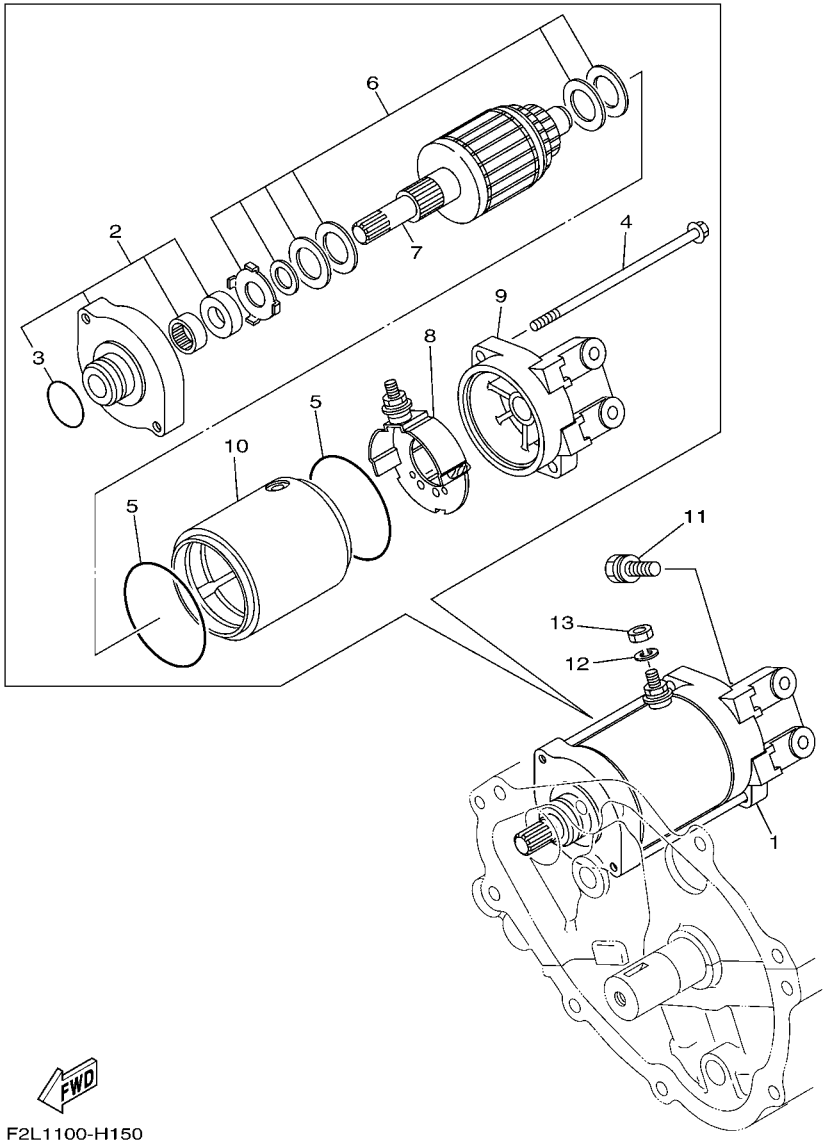

F2L1100-H150

FIG. 16 STARTING MOTOR

REF. NO.	PART NO.	DESCRIPTION	CAN	EUR	GENE			REMARKS
1	6D3–81800–00	STARTING MOTOR ASSY	1	1	1			
2	6M6–81830–00	.FRONT BRACKET ASSY	1	1	1			
3	1FK–81847–00	..O-RING	1	1	1			
4	6M6–81826–00	.BOLT	2	2	2			
5	11H–81844–00	.GASKET	2	2	2			
6	3AJ–81809–00	.WASHER KIT	1	1	1			
7	6M6–81850–00	.ARMATURE ASSY	1	1	1			
8	6M6–81840–10	.BRUSH HOLDER ASSY	1	1	1			
9	6D3–81820–00	.REAR BRACKET ASSY	1	1	1			
10	60E–81810–00	.STATOR ASSY	1	1	1			
11	97513–08530	BOLT, WITH WASHER	2	2	2			
12	92990–06100	WASHER, SPRING	1	1	1			
13	95380–06700	NUT	1	1	1			

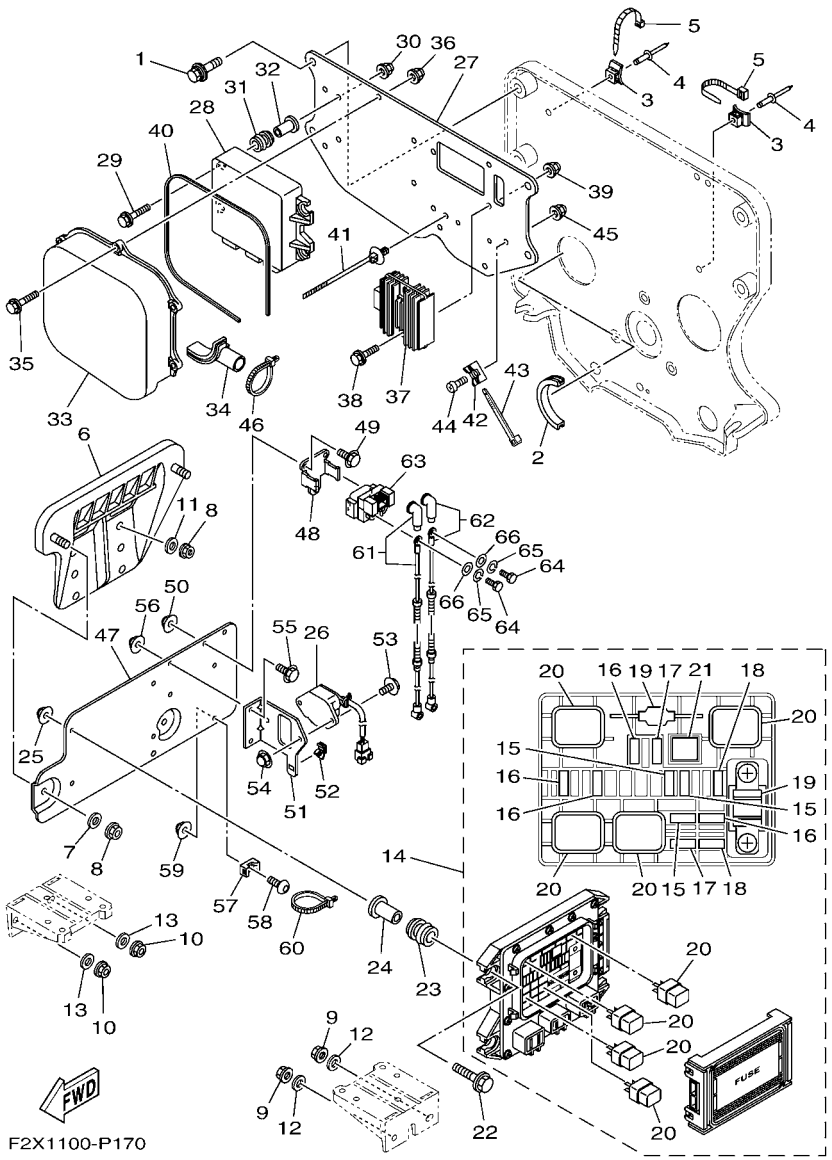

FIG. 17 ELECTRICAL 1

REF. NO.	PART NO.	DESCRIPTION	CAN	EUR	GENE			REMARKS
1	90119–089U7	BOLT, WITH WASHER	4	4	4			
2	F1S–U828H–01	TRIM, 1	1	1	1			
3	F1W–U828M–00	BASE, CLAMP	2	2	2			
4	90267–48802	RIVET, BLIND	2	2	2			
5	90464–32801	CLAMP	2	2	2			
6	F2N–U815D–01	BRACKET, ELECTRIC BOX	1	1	1			
7	90201–099U3	WASHER, PLATE	2	2	2			
8	9572R–08300	NUT, FLANGE	6	6	6			
9	9572R–08300	NUT, FLANGE	2	2	2			
10	9572R–08300	NUT, FLANGE	2	2	2			
11	9299R–08200	WASHER	4	4	4			
12	9299R–08200	WASHER	2	2	2			
13	9299R–08200	WASHER	2	2	2			
14	6EX–82170–00	FUSE BOX ASSY	1	1	1			
15	67F–82151–30	.FUSE (3A)	3	3	3			
16	67F–82151–40	.FUSE (10A)	4	4	4			
17	67F–82151–00	.FUSE (20A)	2	2	2			
18	67F–82151–10	.FUSE (30A)	2	2	2			
19	6EX–82151–00	.FUSE (50A)	2	2	2			
20	6EX–8195A–00	.RELAY ASSY	4	4	4			
21	6EX–2812A–00	.PULLER, FUSE	1	1	1			
22	95814–06025	BOLT, FLANGE	4	4	4			
23	6A0–82317–00	DAMPER, IGNITION COIL	4	4	4			
24	90387–06119	COLLAR	4	4	4			
25	90176–06047	NUT,CAP	4	4	4			
26	60E–8259E–00	SWITCH ASSY	1	1	1			
27	6BU–81845–00	PLATE	1	1	1			

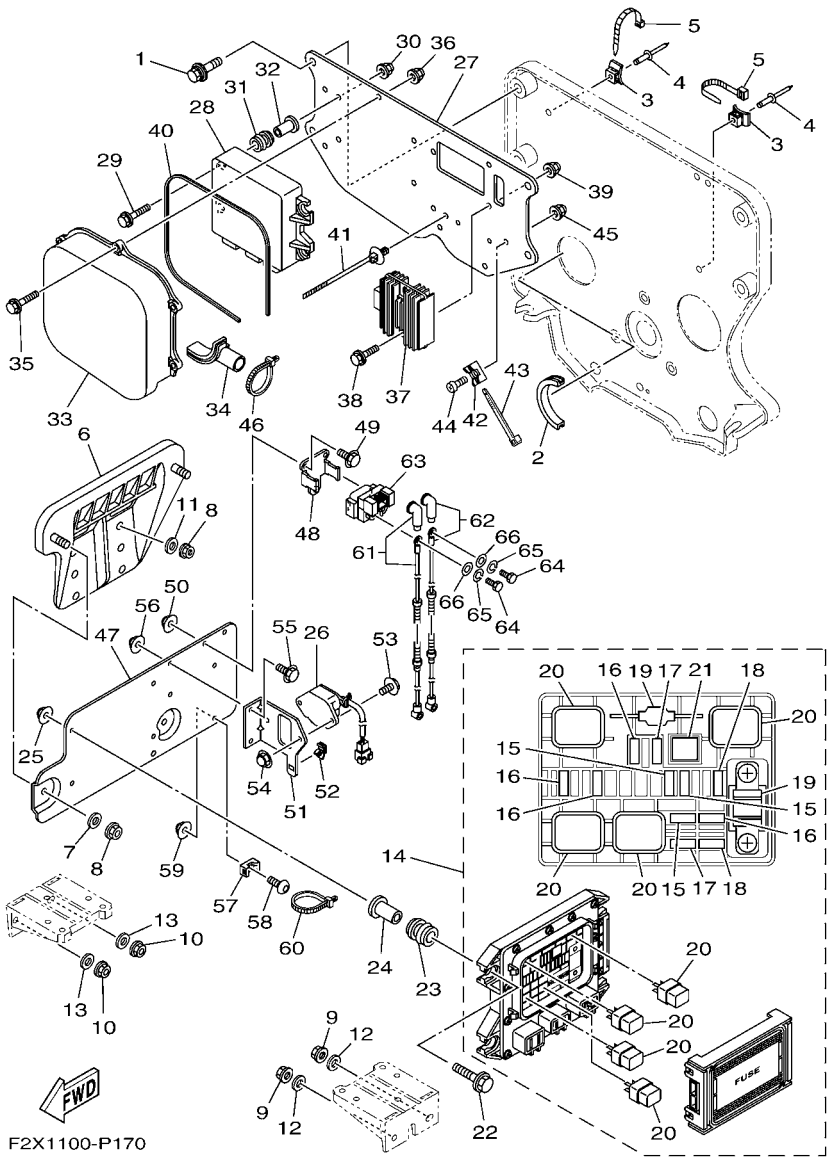

FIG. 17 ELECTRICAL 1

REF. NO.	PART NO.	DESCRIPTION	CAN	EUR	GENE			REMARKS
28	6EX–8591A–A0	ENGINE CONTROL UNIT ASSY	1		1			FOR CAN, GENE
	6EX–8591A–B0	ENGINE CONTROL UNIT ASSY		1				FOR EUR
29	95814–06025	BOLT, FLANGE	4	4	4			
30	90176–06047	NUT,CAP	4	4	4			
31	6A0–82317–00	DAMPER, IGNITION COIL	4	4	4			
32	90387–06119	COLLAR	4	4	4			
33	6BU–81639–00	COVER	1	1	1			
34	6BU–81336–00	GROMMET	1	1	1			
35	95814–06020	BOLT, FLANGE	5	5	5			
36	90176–06047	NUT,CAP	5	5	5			
37	6S8–81960–00	RECTIFIER & REGULATOR ASSY	1	1	1			
38	95814–06020	BOLT, FLANGE	2	2	2			
39	90176–06047	NUT,CAP	2	2	2			
40	6BU–81861–00	GASKET	1	1	1			
41	90464–31001	CLAMP	1	1	1			
42	60E–1244E–00	BRACKET 1	1	1	1			
43	90465–13M24	CLAMP	1	1	1			
44	92014–06012	BOLT, BUTTON HEAD	1	1	1			
45	90176–06047	NUT,CAP	1	1	1			
46	90465–13M18	CLAMP	1	1	1			
47	6EX–81845–00	PLATE	1	1	1			
48	6EX–81953–00	STAY, RELAY	1	1	1			
49	95814–06012	BOLT, FLANGE	3	3	3			
50	90176–06047	NUT,CAP	3	3	3			
51	6EX–82588–00	PLATE	1	1	1			
52	90464–09M47	CLAMP	1	1	1			
53	95814–06012	BOLT, FLANGE	2	2	2			

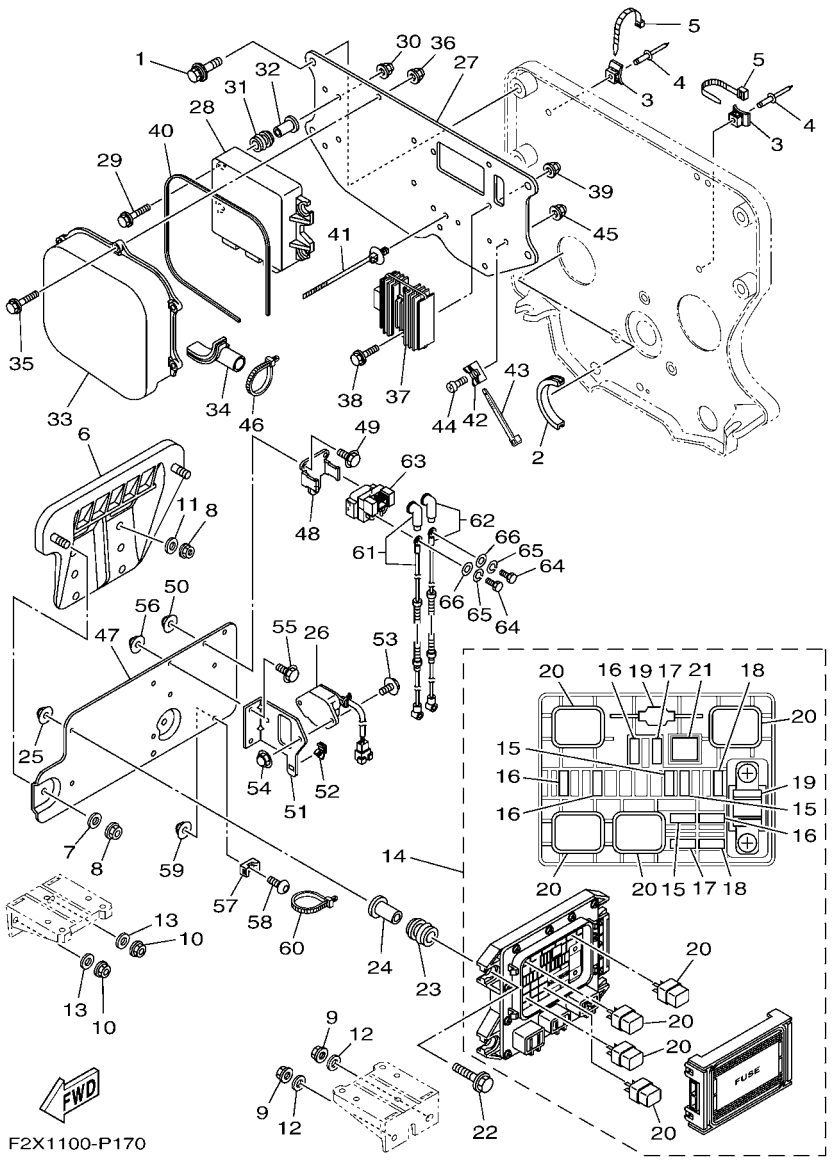

FIG. 17 ELECTRICAL 1

REF. NO.	PART NO.	DESCRIPTION	CAN	EUR	GENE			REMARKS
54	90176–06047	NUT,CAP	2	2	2			
55	95814–06012	BOLT, FLANGE	2	2	2			
56	90176–06047	NUT,CAP	2	2	2			
57	60E–1244E–00	BRACKET 1	1	1	1			
58	92014–06012	BOLT, BUTTON HEAD	1	1	1			
59	90176–06047	NUT,CAP	1	1	1			
60	90465–13M18	CLAMP	2	2	2			
61	6EX–82115–00	WIRE, PLUS LEAD	1	1	1			
62	6EX–82117–00	WIRE, LEAD	1	1	1			
63	1B7–81940–00	STARTER RELAY ASSY (2768102-A)	1	1	1			
64	97095–06012	BOLT	2	2	2			
65	92995–06100	WASHER, SPRING	2	2	2			
66	92995–06600	WASHER	2	2	2			

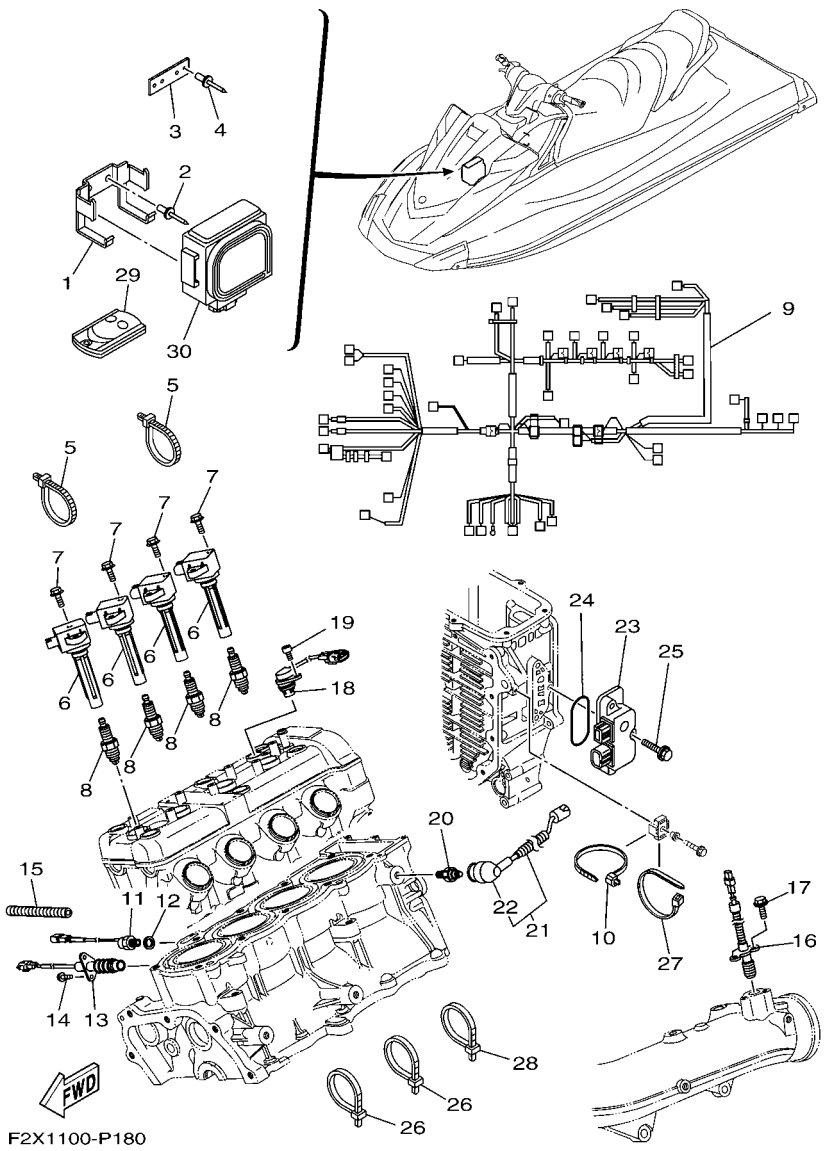

FIG. 18 ELECTRICAL 2

REF. NO.	PART NO.	DESCRIPTION	CAN	EUR	GENE			REMARKS
1	F1W–U826C–00	BRACKET	1	1	1			
2	90267–489U1	RIVET,BLIND	2	2	2			
3	F1W–U8376–00	PLATE	1	1	1			
4	90267–489U1	RIVET,BLIND	2	2	2			
5	90464–35132	CLAMP	2	2	2			
6	6EX–82310–00	IGNITION COIL ASSY	4	4	4			
7	95880–06016	BOLT, FLANGE	8	8	8			
8	94702–00409	PLUG, SPARK (NGK CR9EB)	4	4	4			
9	6EX–8259L–A0	WIRE HARNESS ASSY 1	1	1	1			
10	90465–13M24	CLAMP	1	1	1			
11	61A–85790–00	THERMOSENSOR ASSY	1	1	1			
12	92990–10600	WASHER, PLATE	1	1	1			
13	60E–82560–A1	THERMO SWITCH ASSY	1	1	1			
14	97595–06416	BOLT, WITH WASHER	2	2	2			
15	90446–14M23	HOSE (L180)	1	1	1			
16	6D3–82560–01	THERMO SWITCH ASSY	1	1	1			
17	97595–06416	BOLT, WITH WASHER	2	2	2			
18	60E–85896–01	SENSOR, CAM POSITION	1	1	1			
19	91380–06016	BOLT	1	1	1			
20	68V–82504–00	OIL PRESSURE SWITCH ASSY	1	1	1			
21	60E–81315–00	LEAD WIRE ASSY	1	1	1			
22	60E–82532–00	.CAP	1	1	1			
23	6D3–8273J–01	EARTH PLATE COMP.	1	1	1			
24	93210–60ME8	O-RING	1	1	1			
25	90119–06048	BOLT, WITH WASHER	3	3	3			
26	90465–13M18	CLAMP	2	2	2			
27	90465–13152	CLAMP	1	1	1			

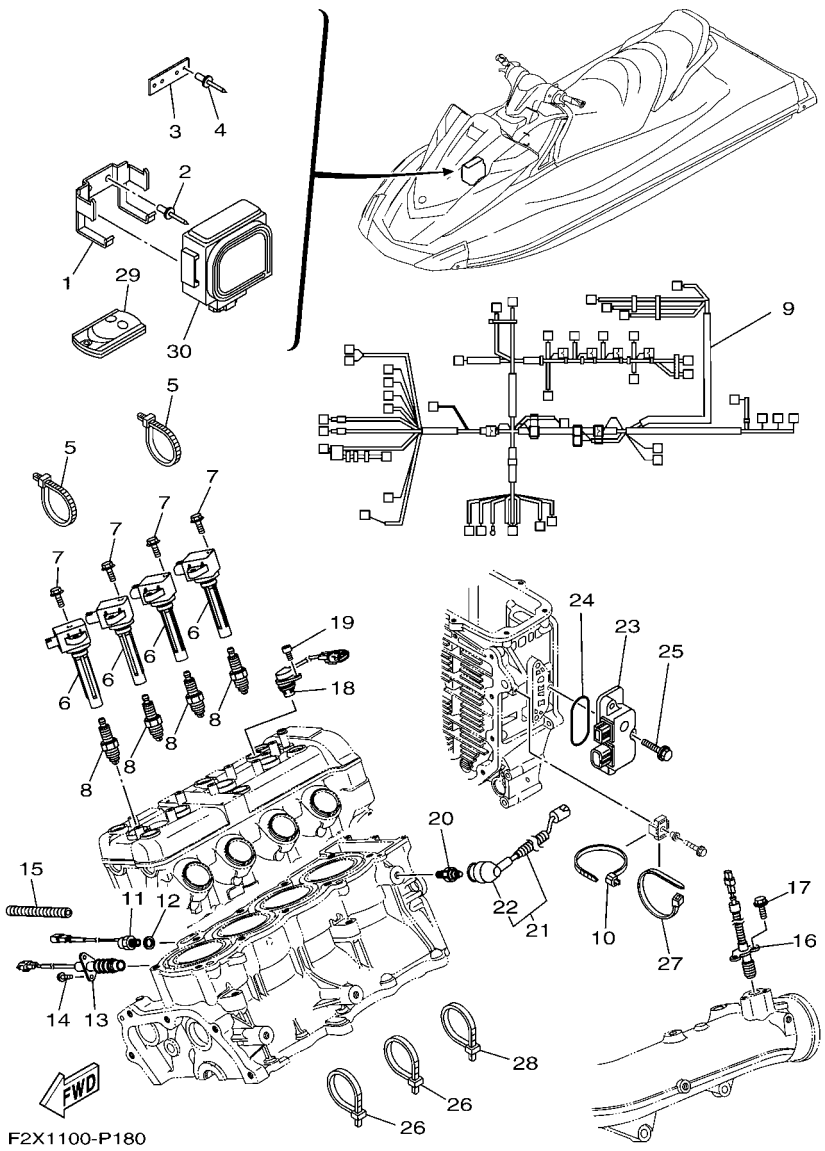

FIG. 18 ELECTRICAL 2

REF. NO.	PART NO.	DESCRIPTION	CAN	EUR	GENE			REMARKS
28	90465–13M18	CLAMP	2	2	2			
29	6B6–86261–00	XMTR. COMP.	1					FOR CAN
	6B6–86261–10	XMTR. COMP.		2	2			FOR EUR, GENE
30	6B6–86265–00	RECEIVER COMPLETE	1					FOR CAN
	6B6–86265–10	RECEIVER COMPLETE		1	1			FOR EUR, GENE

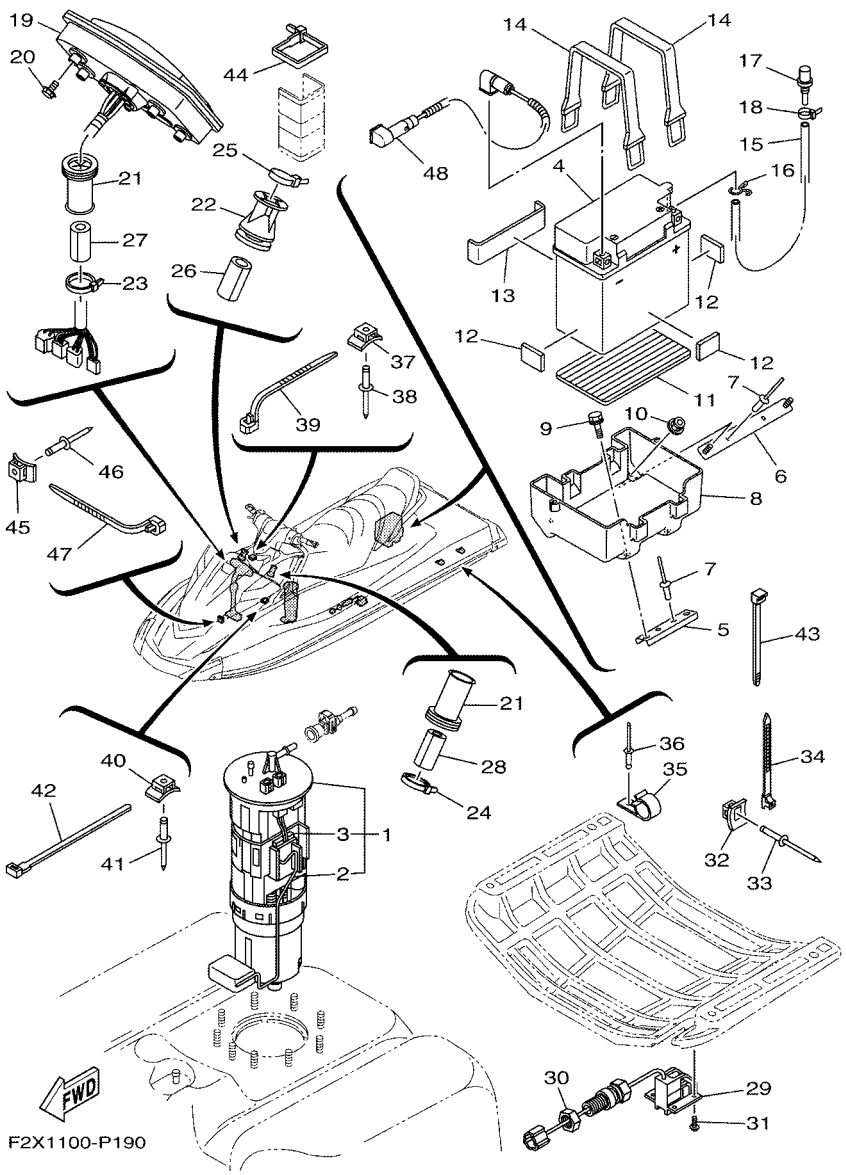

FIG. 19 ELECTRICAL 3

REF. NO.	PART NO.	DESCRIPTION	CAN	EUR	GENE			REMARKS
1	60E–13907–03	FUEL PUMP COMP.	1	1	1			
2	60E–682E0–00	.FUEL SENDER ASSY	1	1	1			
3	60E–82556–00	.DAMPER, STOPPER	1	1	1			
4	EU0–U8217–H2	BATTERY (YB16CL-B)	1	1	1			
5	F2S–U8592–00	PLATE, BASE 2	1	1	1			
6	F2S–U8593–00	PLATE, BASE 3	1	1	1			
7	90267–489U1	RIVET,BLIND	4	4	4			
8	F2S–U8211–00	CASE, BATTERY	1	1	1			
9	90119–06832	BOLT, WITH WASHER	2	2	2			
10	F2N–U142L–00	NUT, LOCK	2	2	2			
11	F1S–U8221–00	PAD, BATTERY	1	1	1			
12	EU0–U8221–30	PAD, BATTERY 2	3	3	3			
13	F1K–U8221–00	PAD, BATTERY	1	1	1			
14	EU0–U821D–00	BAND,BATTERY 1	2	2	2			
15	F0D–U785G–10	HOSE, AIR VENT	1	1	1			
16	90467–089U1	CLIP	1	1	1			
17	GJ3–6215F–00	NIPPLE	1	1	1			
18	90465–11829	CLAMP	1	1	1			
19	F2X–6820A–00	METER ASSY	1	1	1			
20	90119–05803	BOLT, WITH WASHER	4	4	4			
21	GU2–6822E–01	GROMMET	2	2	2			
22	F3J–U822E–00	GROMMET	1	1	1			
23	90464–32801	CLAMP	1	1	1			
24	90464–32801	CLAMP	1	1	1			
25	90464–32801	CLAMP	1	1	1			
26	GJ1–U7578–21	PACKING, HOSE 2	1	1	1			
27	GJ1–U7578–11	PACKING, HOSE 2	1	1	1			

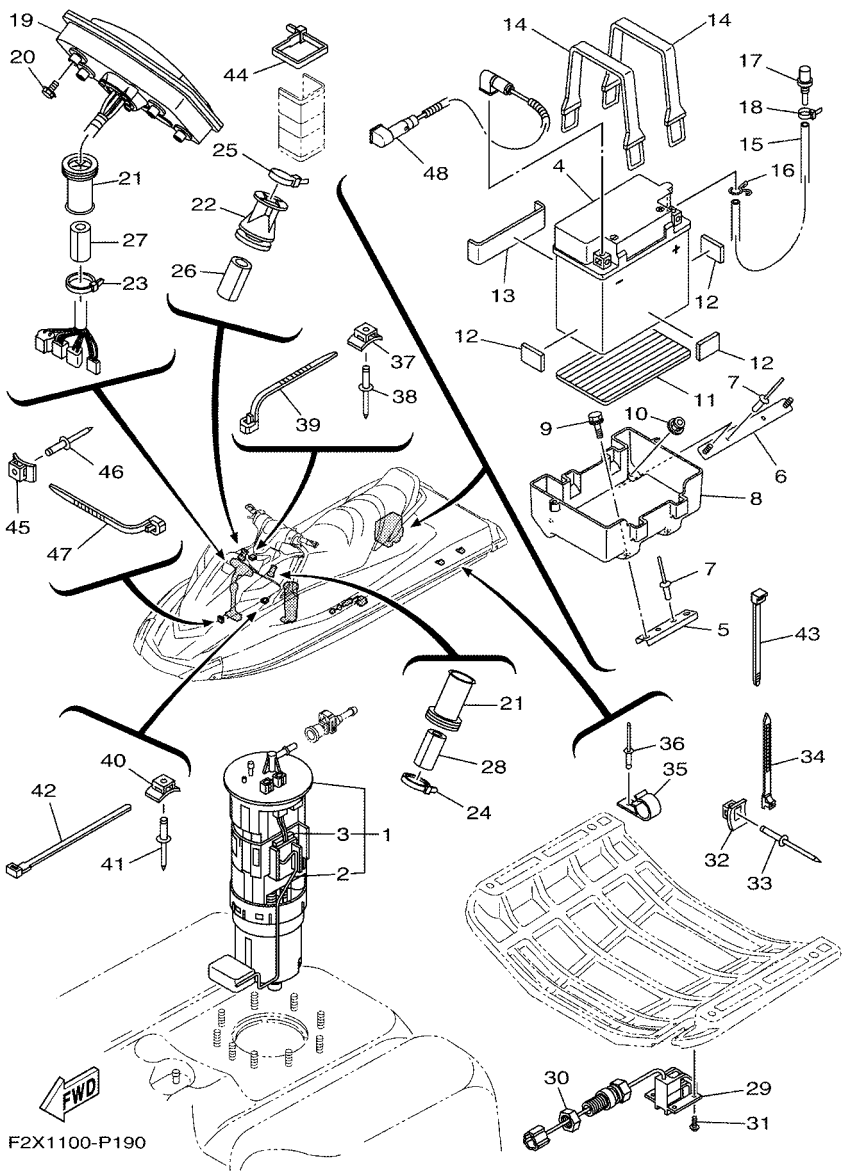

FIG. 19 ELECTRICAL 3

REF. NO.	PART NO.	DESCRIPTION	CAN	EUR	GENE			REMARKS
28	GJ1–U7578–11	PACKING, HOSE 2	1	1	1			
29	F1S–U8K31–02	SENSOR SPEED	1	1	1			
30	F2C–U151S–00	NUT	1	1	1			
31	90150–05807	SCREW, ROUND HEAD	4	4	4			
32	F1W–U828M–00	BASE, CLAMP	8	8	8			
33	90267–489U6	RIVET, BLIND	8	8	8			
34	90464–32801	CLAMP	8	8	8			
35	F3J–U8368–01	CLAMP	2	2	2			
36	90267–409U5	RIVET, BLIND	2	2	2			
37	F1W–U828M–00	BASE, CLAMP	3	3	3			
38	90267–489U6	RIVET, BLIND	3	3	3			
39	90464–32801	CLAMP	3	3	3			
40	F1W–U828M–00	BASE, CLAMP	1	1	1			
41	90267–489U6	RIVET, BLIND	1	1	1			
42	90601–200U2	BAND	1	1	1			
43	F2C–U4256–00	CLAMP	1	1	1			
44	90601–200U2	BAND	1	1	1			
45	F1W–U828M–00	BASE, CLAMP	1	1	1			
46	90267–48803	RIVET, BLIND	1	1	1			
47	90464–32801	CLAMP	1	1	1			
48	6BU–82116–00	WIRE, MINUS LEAD	1	1	1			

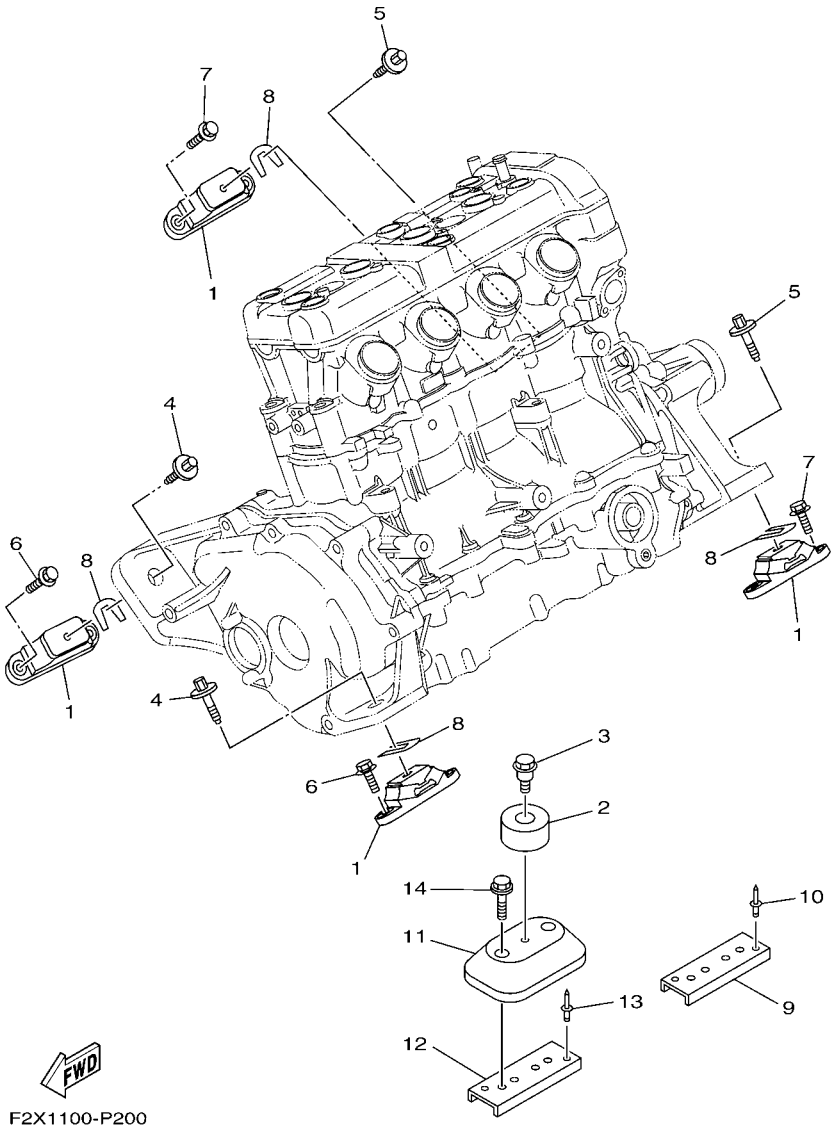

FIG. 20 ENGINE MOUNT

REF. NO.	PART NO.	DESCRIPTION	CAN	EUR	GENE			REMARKS
1	67X–44517–10	MOUNT RUBBER	4	4	4			
2	6D3–44574–00	STOPPER, LOWER MOUNT RUBBER	1	1	1			
3	90109–06M92	BOLT	1	1	1			
4	90119–08859	BOLT, WITH WASHER	2	2	2			
5	90119–08859	BOLT, WITH WASHER	2	2	2			
6	90119–08823	BOLT, WITH WASHER	4	4	4			
7	90119–08823	BOLT, WITH WASHER	4	4	4			
8	EU0–U7354–00–01	SHIM (T=0.1)	4	4	4			UN
	EU0–U7354–00–03	SHIM (T=0.3)	4	4	4			UN
	EU0–U7354–00–05	SHIM (T=0.5)	4	4	4			UN
	EU0–U7354–00–10	SHIM (T=1.0)	4	4	4			UN
	EU0–U7354–00–20	SHIM (T=2.0)	4	4	4			UN
9	F2S–U732B–00	PLATE	2	2	2			
10	90267–489U2	RIVET, BLIND	4	4	4			
11	F2N–U721B–00	SPACER,ENGINE MOUNT	1	1	1			
12	F2N–U732B–10	PLATE	1	1	1			
13	90267–489U2	RIVET, BLIND	2	2	2			
14	90119–06891	BOLT, WITH WASHER	2	2	2			

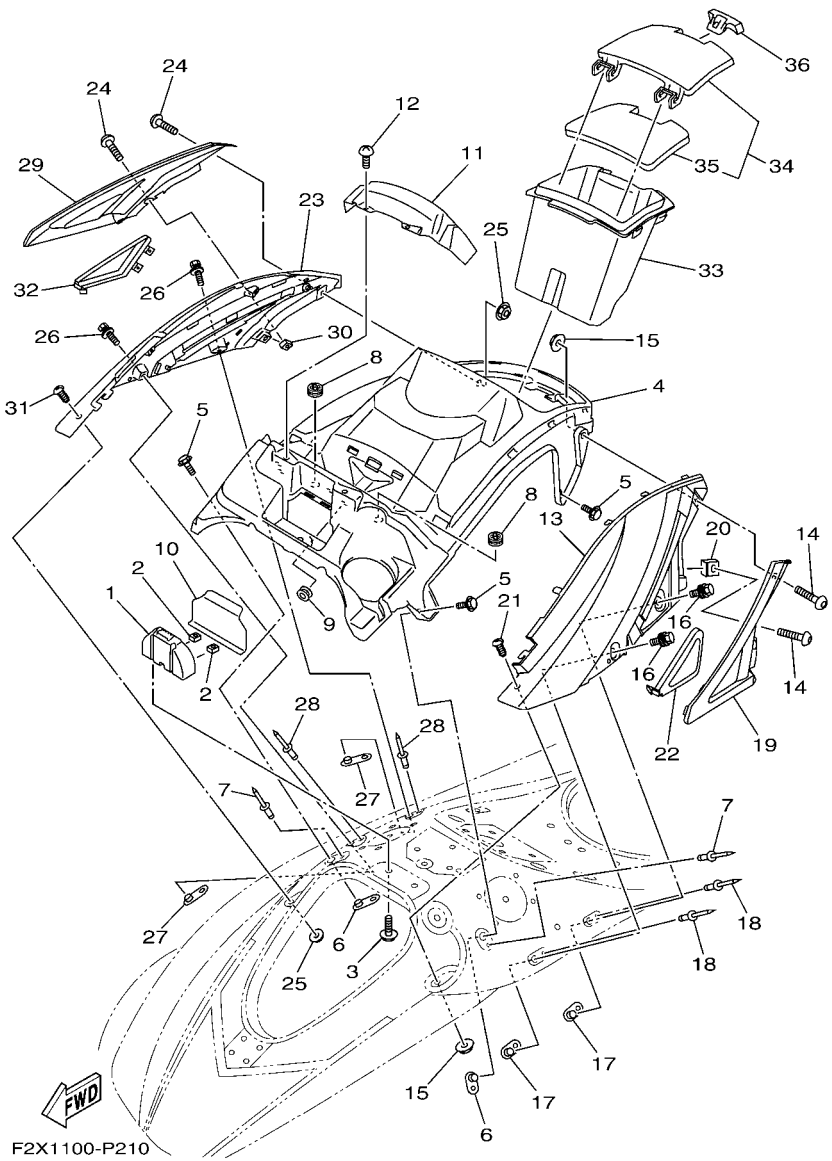

FIG. 21 ENGINE HATCH 1

REF. NO.	PART NO.	DESCRIPTION	CAN	EUR	GENE			REMARKS
1	F2X–U517F–00	HOOK,LID LOCK	1	1	1			
2	F2X–U517E–00	NUT	2	2	2			
3	90119–06880	BOLT, WITH WASHER	2	2	2			
4	F2X–U5554–00	COVER, CENTER	1	1	1			
5	90119–06882	BOLT, WITH WASHER	4	4	4			
6	F2X–U5175–00	PLATE, FIX	2	2	2			
7	90267–48802	RIVET, BLIND	2	2	2			
8	F1X–U828E–01	DAMPER 1	2	2	2			
9	90480–19800	GROMMET	4	4	4			
10	F2X–U555B–00	SEAL, COVER CENTER	1	1	1			
11	F2X–U8262–00	COVER METER	1	1	1			
12	F2S–U13C1–00	SCREW	2	2	2			
13	F2X–U377B–00–P0	COVER,SIDE 1 (DPBM11)	1	1	1			CRUISER BLUE
	F2X–U377B–00–P2	COVER,SIDE 1 (PURW)	1	1	1			CRUISER WHITE
	F2X–U377B–00–P3	COVER,SIDE 1 (LNMP)	1	1	1			DELUXE GRAY
	F2X–U377B–00–P4	COVER,SIDE 1 (BMG)	1	1	1			DELUXE BLACK
14	90111–06803	BOLT,HEX. SOCKET BUTTON	2	2	2			
15	F2N–U142L–00	NUT, LOCK	2	2	2			
16	90119–06882	BOLT, WITH WASHER	2	2	2			
17	F2X–U5175–00	PLATE, FIX	2	2	2			
18	90267–48802	RIVET, BLIND	2	2	2			
19	F2X–U377F–00	ORNAMENT, SIDE LH	1	1	1			
20	F2X–U517E–00	NUT	1	1	1			
21	F2N–67823–10	SCREW	1	1	1			
22	F2X–U377H–00	INNER, COVER SIDE 1	1	1	1			
23	F2X–U377C–00–P0	COVER,SIDE 2 (DPBM11)	1	1	1			CRUISER BLUE
	F2X–U377C–00–P2	COVER,SIDE 2 (PURW)	1	1	1			CRUISER WHITE

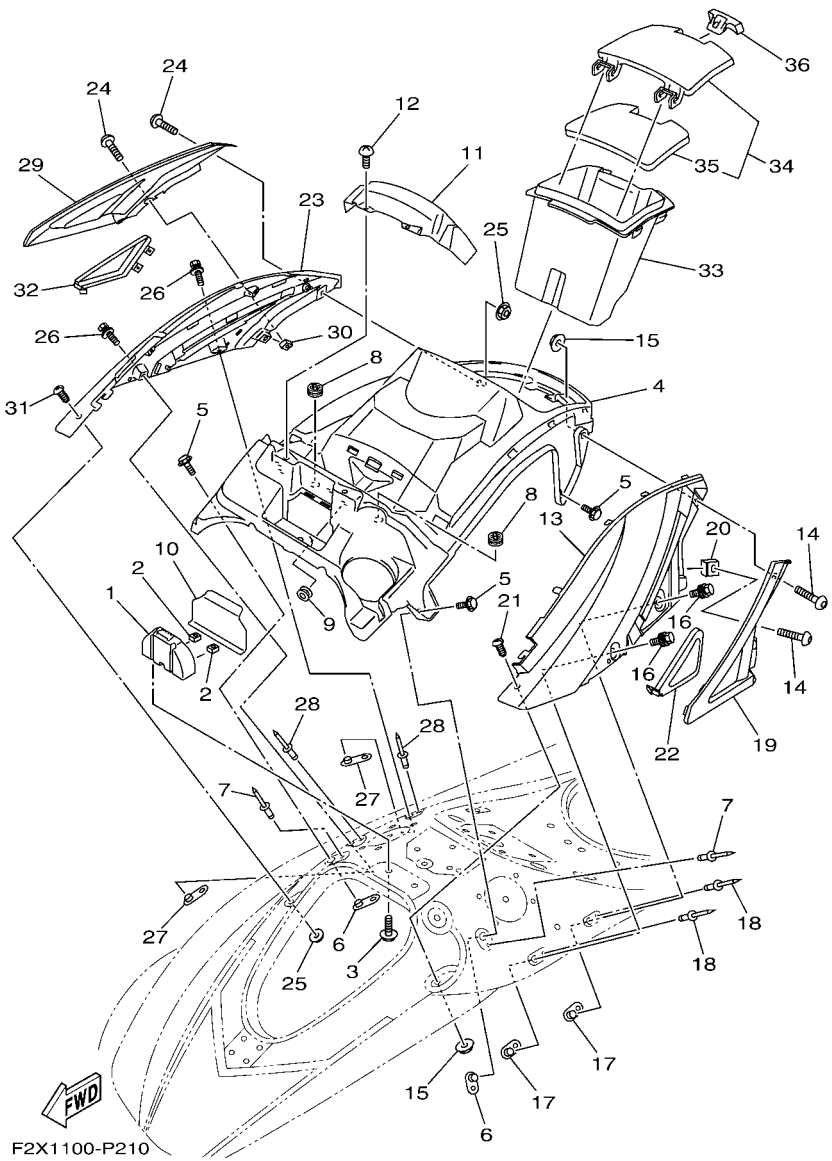

FIG. 21 ENGINE HATCH 1

REF. NO.	PART NO.	DESCRIPTION	CAN	EUR	GENE			REMARKS
23	F2X–U377C–00–P3	COVER,SIDE 2 (LNMP)	1	1	1			DELUXE GRAY
	F2X–U377C–00–P4	COVER,SIDE 2 (BMG)	1	1	1			DELUXE BLACK
24	90111–06803	BOLT,HEX. SOCKET BUTTON	2	2	2			
25	F2N–U142L–00	NUT, LOCK	2	2	2			
26	90119–06882	BOLT, WITH WASHER	2	2	2			
27	F2X–U5175–00	PLATE, FIX	2	2	2			
28	90267–48802	RIVET, BLIND	2	2	2			
29	F2X–U377G–00	ORNAMENT, SIDE RH	1	1	1			
30	F2X–U517E–00	NUT	1	1	1			
31	F2N–67823–10	SCREW	1	1	1			
32	F2X–U377J–00	INNER, COVER SIDE 2	1	1	1			
33	F2X–U516P–00	BOX GLOVE	1	1	1			
34	F2X–U1708–00	GLOVE BOX HATCH ASSY.	1	1	1			
35	F2X–U519D–00	.PACKING CASE	1	1	1			
36	F2X–U2875–00	LOCK	1	1	1			

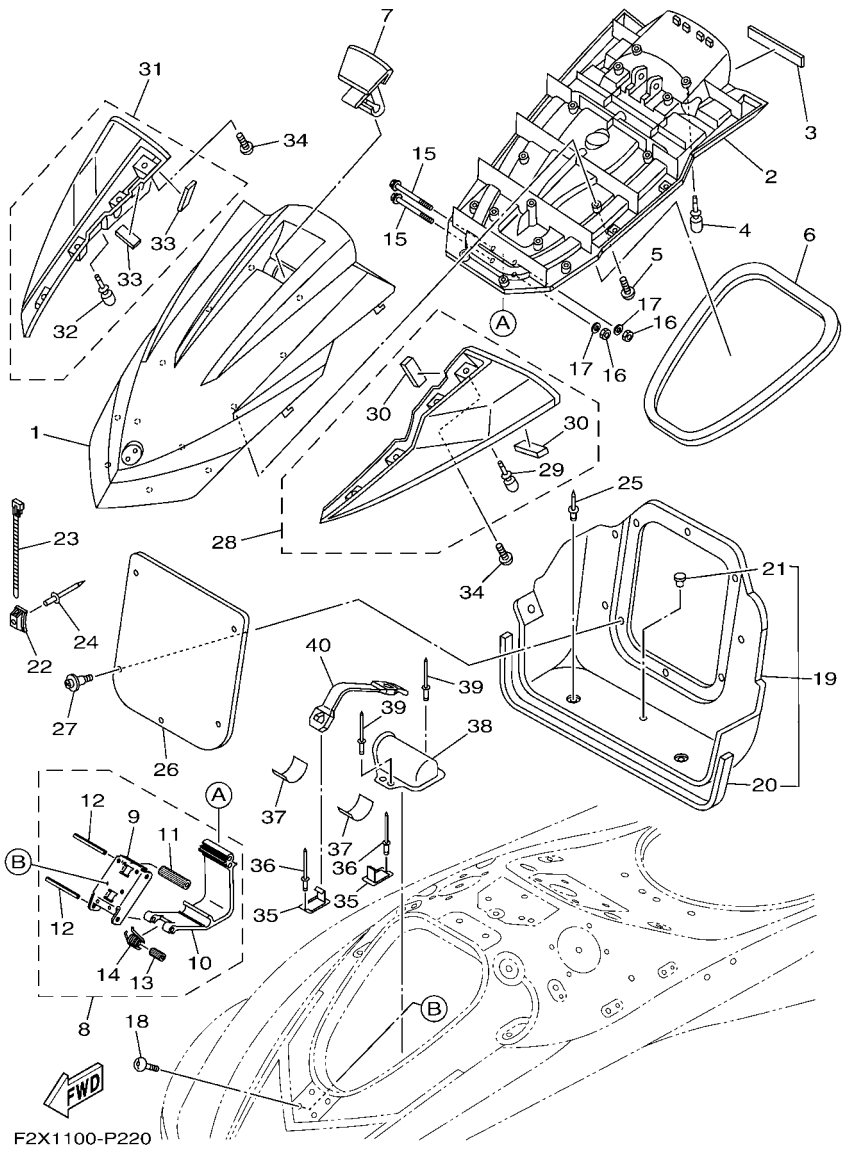

FIG. 22 ENGINE HATCH 2

REF. NO.	PART NO.	DESCRIPTION	CAN	EUR	GENE			REMARKS
1	F2X–U517B–00–P0	LID, ENGINE ROOM (DPBM11)	1	1	1			CRUISER BLUE
	F2X–U517B–00–P2	LID, ENGINE ROOM (PURW)	1	1	1			CRUISER WHITE
	F2X–U517B–00–P3	LID, ENGINE ROOM (LNMP)	1	1	1			DELUXE GRAY
	F2X–U517B–00–P4	LID, ENGINE ROOM (BMG)	1	1	1			DELUXE BLACK
2	F2X–U519G–00	INNER, ENGINE HATCH	1	1	1			
3	F2C–U515D–00	DAMPER 1	1	1	1			
4	F1W–U3768–01	CUSHION, RUBBER	2	2	2			
5	F2S–U13C1–00	SCREW	15	15	15			
6	F2N–U2663–01	PACKING 1	1	1	1			
7	F2X–U517C–01	LOCK, LID	1	1	1			
8	F2X–U515A–00	HINGE ASSY.	1	1	1			
9	F1K–U518E–04	.PLATE, HINGE LID	1	1	1			
10	F1K–U517D–05	.HINGE, LID	1	1	1			
11	F2X–U135C–00	.ROLLER, DETENT	1	1	1			
12	F1K–U517R–00	.PIN, HINGE	2	2	2			
13	F1K–U471E–03	.SPACER 1	1	1	1			
14	F1K–U283B–02	.SPRING, TORSION	1	1	1			
15	90105–06826	BOLT, FLANGE	2	2	2			
16	9572R–06300	NUT, NYLON	2	2	2			
17	9299R–06200	WASHER	2	2	2			
18	F2N–67823–00	SCREW	4	4	4			
19	F2X–U475B–00	LOCKER,BOW	1	1	1			
20	F2N–U266C–01	.PACKING 4	1	1	1			
21	90605–502U1	.PLUG, BLIND	1	1	1			
22	F1W–U828M–00	BASE, CLAMP	1	1	1			
23	90267–48803	RIVET, BLIND	1	1	1			
24	90464–32801	CLAMP	1	1	1			

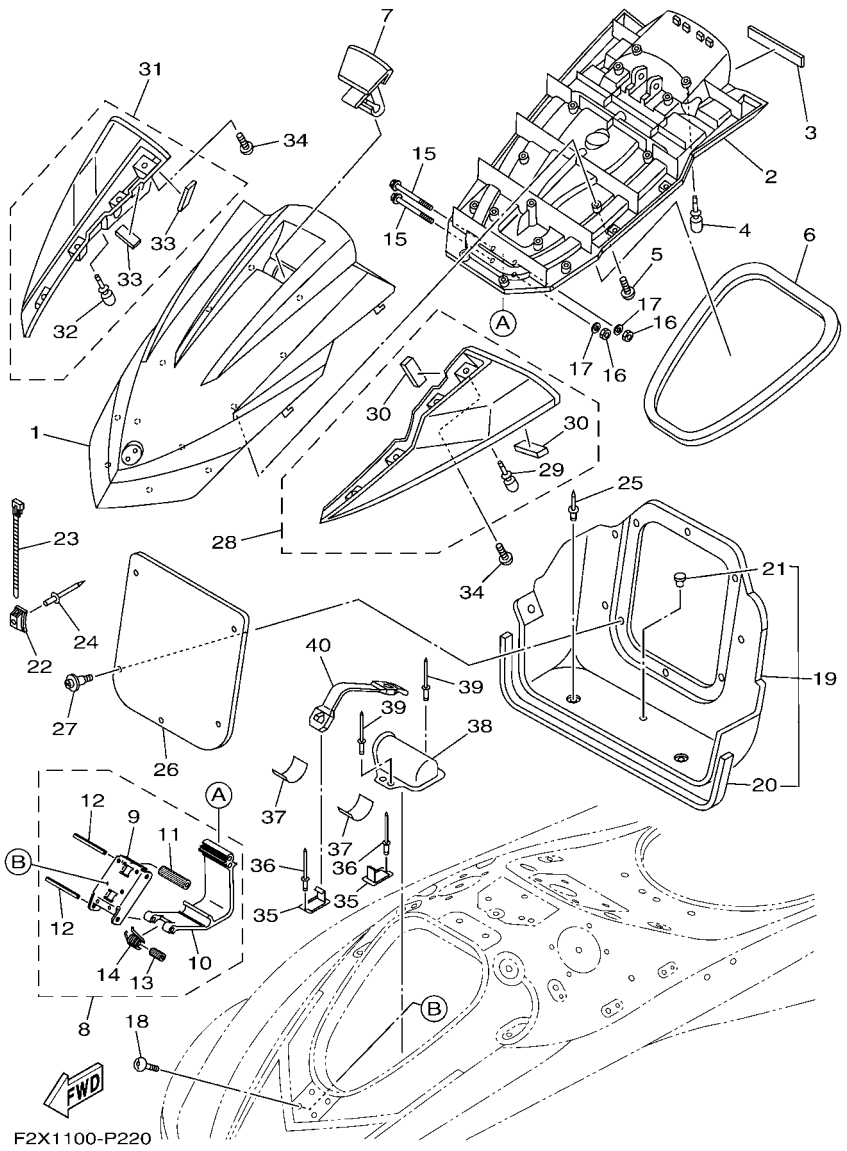

FIG. 22 ENGINE HATCH 2

REF. NO.	PART NO.	DESCRIPTION	CAN	EUR	GENE			REMARKS
25	90269–08801	RIVET	4	4	4			
26	F2S–U475F–00	PLATE, LOKER BOW	1	1	1			
27	90269–08801	RIVET	5	5	5			
28	F2X–U590D–10	MIRROR ASSY. 1	1	1	1			CRUISER BLUE
	F2X–U590D–30	MIRROR ASSY. 1	1	1	1			CRUISER WHITE
	F2X–U590D–50	MIRROR ASSY. 1	1	1	1			DELUXE GRAY
	F2X–U590D–10	MIRROR ASSY. 1	1	1	1			DELUXE BLACK
29	F1W–U3768–01	.CUSHION, RUBBER	1	1	1			
30	F1K–U266B–00	.PACKING 3	2	2	2			
31	F2X–U590E–10	MIRROR ASSY. 2	1	1	1			CRUISER BLUE
	F2X–U590E–30	MIRROR ASSY. 2	1	1	1			CRUISER WHITE
	F2X–U590E–50	MIRROR ASSY. 2	1	1	1			DELUXE GRAY
	F2X–U590E–10	MIRROR ASSY. 2	1	1	1			DELUXE BLACK
32	F1W–U3768–01	.CUSHION, RUBBER	1	1	1			
33	F1K–U266B–00	.PACKING 3	2	2	2			
34	F2X–U13C1–00	SCREW	8	8	8			
35	F1K–U5772–04	HOOK A	2	2	2			
36	90267–489U1	RIVET,BLIND	2	2	2			
37	F1K–U759C–00	MAT 2	2	2	2			
38	F2X–U5983–00	BOX, FIRE EXTINGUISHER	1	1	1			
39	90267–48802	RIVET, BLIND	2	2	2			
40	F2P–U828K–00	BAND 1	1	1	1			

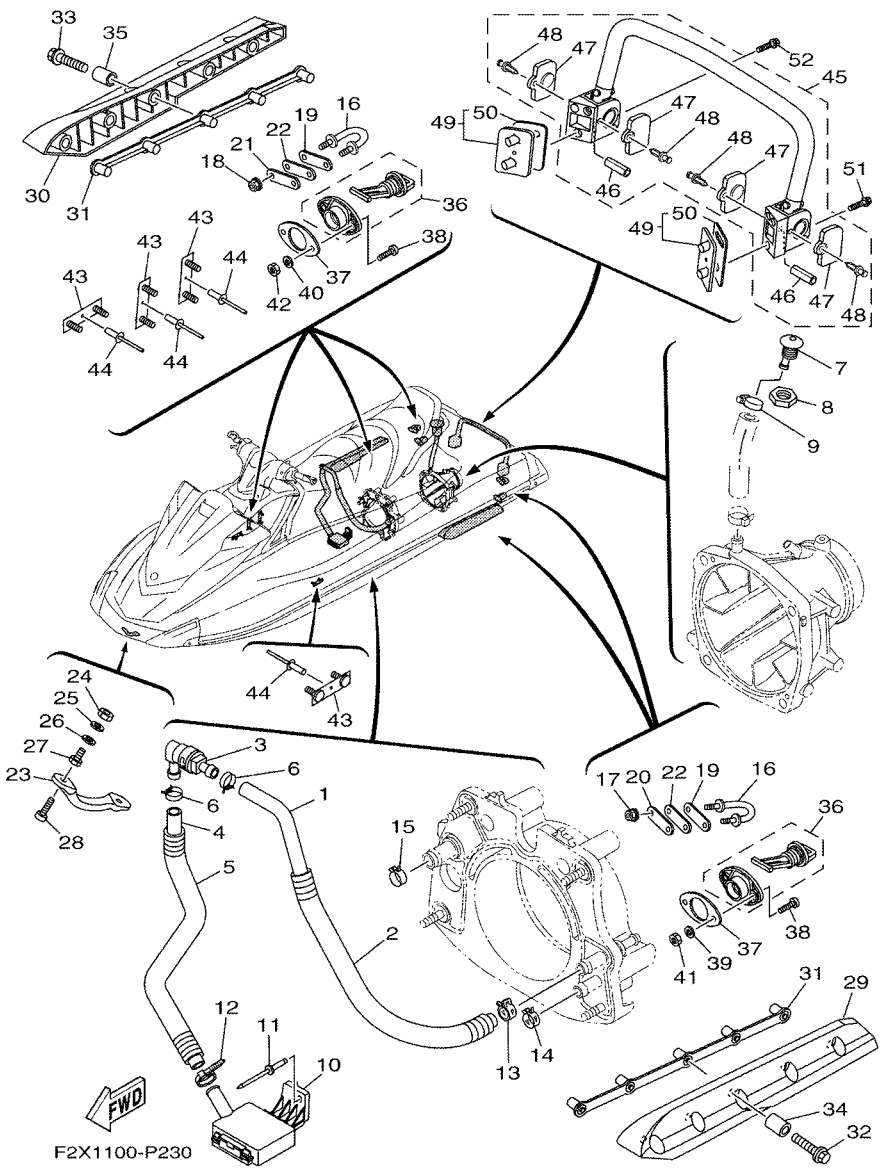

FIG. 23 HULL & DECK

REF. NO.	PART NO.	DESCRIPTION	CAN	EUR	GENE			REMARKS
1	90445–20804	HOSE (L860)	1	1	1			
2	6EX–U773E–00	TUBE,2	1	1	1			
3	68N–5112T–00	JOINT, HOSE	1	1	1			
4	90445–20800	HOSE (L500)	1	1	1			
5	6EX–U773D–00	TUBE	1	1	1			
6	90467–18804	CLIP	2	2	2			
7	F1W–U269B–00	SPOUT	1	1	1			
8	EU0–61652–00	NUT	1	1	1			
9	90601–118UF	BAND, HOSE 18	1	1	1			
10	F1B–U761D–02	STRAINER, BILGE	1	1	1			
11	90267–489U8	RIVET, BLIND	1	1	1			
12	90465–11829	CLAMP	1	1	1			
13	90467–21800	CLIP	1	1	1			
14	90467–200A0	CLIP	1	1	1			
15	90467–210A0	CLIP	1		1			FOR CAN, GENE
	90467–26800	CLIP		1				FOR EUR
16	F2N–U1628–02	STERN EYE	2	2	2			
17	9572R–08300	NUT, FLANGE	2	2	2			
18	9572R–08300	NUT, FLANGE	2	2	2			
19	GP7–U4953–10	PLATE A	2	2	2			
20	GP7–U4953–10	PLATE A	1	1	1			
21	GP7–U4953–10	PLATE A	1	1	1			
22	F1B–U1653–02	PACKING	2	2	2			
23	F1K–61624–00	BOWEYE 1	1	1	1			
24	99780–12600	NUT.HEX.(COARS)	2	2	2			
25	92990–12200	WASHER, PLAIN	2	2	2			
26	F0X–61637–00	WASHER	2	2	2			

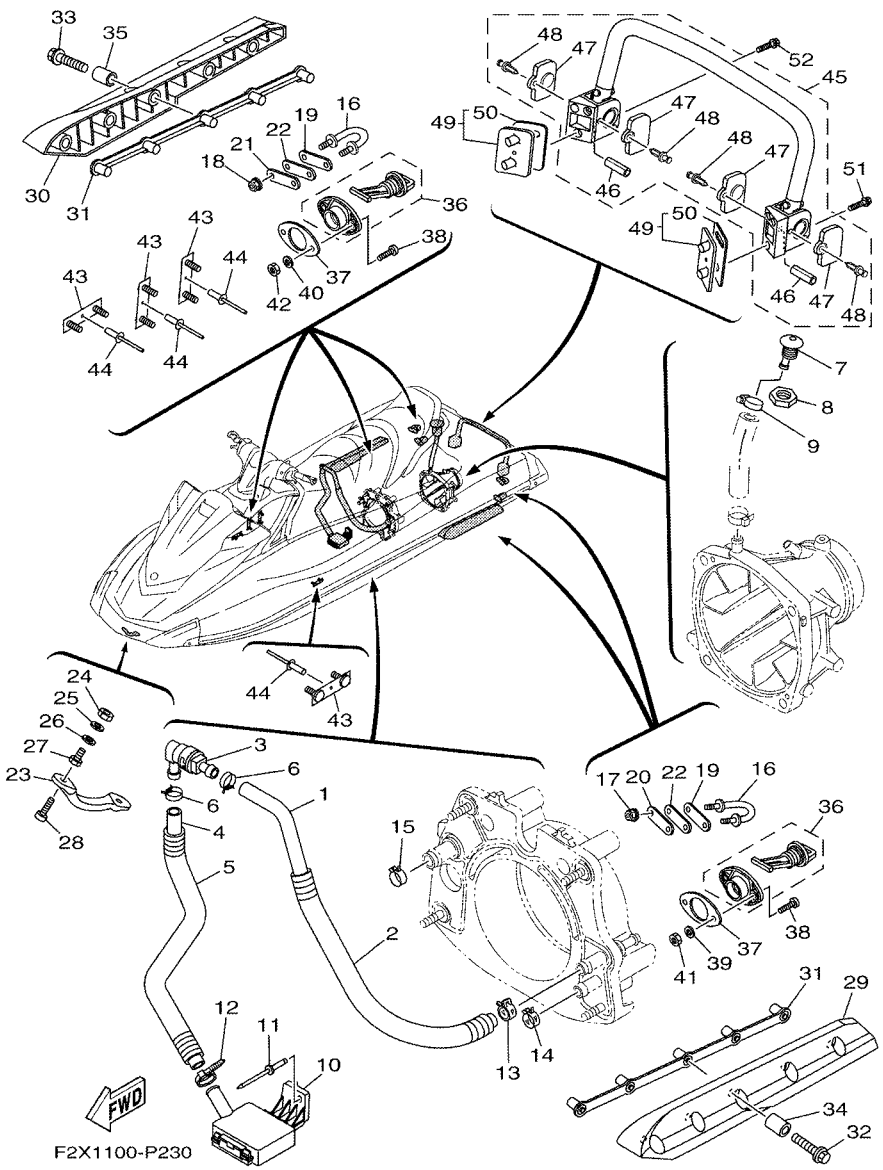

FIG. 23 HULL & DECK

REF. NO.	PART NO.	DESCRIPTION	CAN	EUR	GENE			REMARKS
27	F0X–61652–00	NUT (BOLT/NUT)	2	2	2			
28	90110–06040	BOLT, HEXAGON SOCKET HEAD	2	2	2			
29	F1S–U883N–01	STABILIZER LH	1	1	1			BLACK
30	F1S–U883P–01	STABILIZER RH	1	1	1			BLACK
31	F1X–U883T–01	BRACKET,STABILIZER	2	2	2			
32	90105–08860	BOLT, FLANGE	5	5	5			
33	90105–08860	BOLT, FLANGE	5	5	5			
34	F2N–U8169–00	SPACER	5	5	5			
35	F2N–U8169–00	SPACER	5	5	5			
36	F1S–U2280–02	DRAIN PLUG ASSY.	2	2	2			
37	F1S–U2285–00	PACKING, DRAIN	2	2	2			
38	9788R–05025	SCREW, PAN HEAD	4	4	4			
39	9299R–05200	WASHER	2	2	2			
40	9299R–05200	WASHER	2	2	2			
41	9572R–05300	NUT, FLANGE	2	2	2			
42	9572R–05300	NUT, FLANGE	2	2	2			
43	F1K–U826C–03	BRACKET	4	4	4			
44	90267–489U1	RIVET,BLIND	4	4	4			
45	F2X–U278A–00	LADDER, STEP ASSY	1	1	1			
46	F1W–U771H–00	.SLEEVE 1	2	2	2			
47	F2C–U377H–00	.INNER, COVER SIDE 1	4	4	4			
48	F2C–U1314–00	.PIN	4	4	4			
49	F2S–U278F–00	BRACKET, LADDER LH	2	2	2			
50	F2S–U278H–00	.PACKING, BRKT. 1	1	1	1			
51	90119–08861	BOLT, WITH WASHER	2	2	2			
52	90119–08861	BOLT, WITH WASHER	2	2	2			

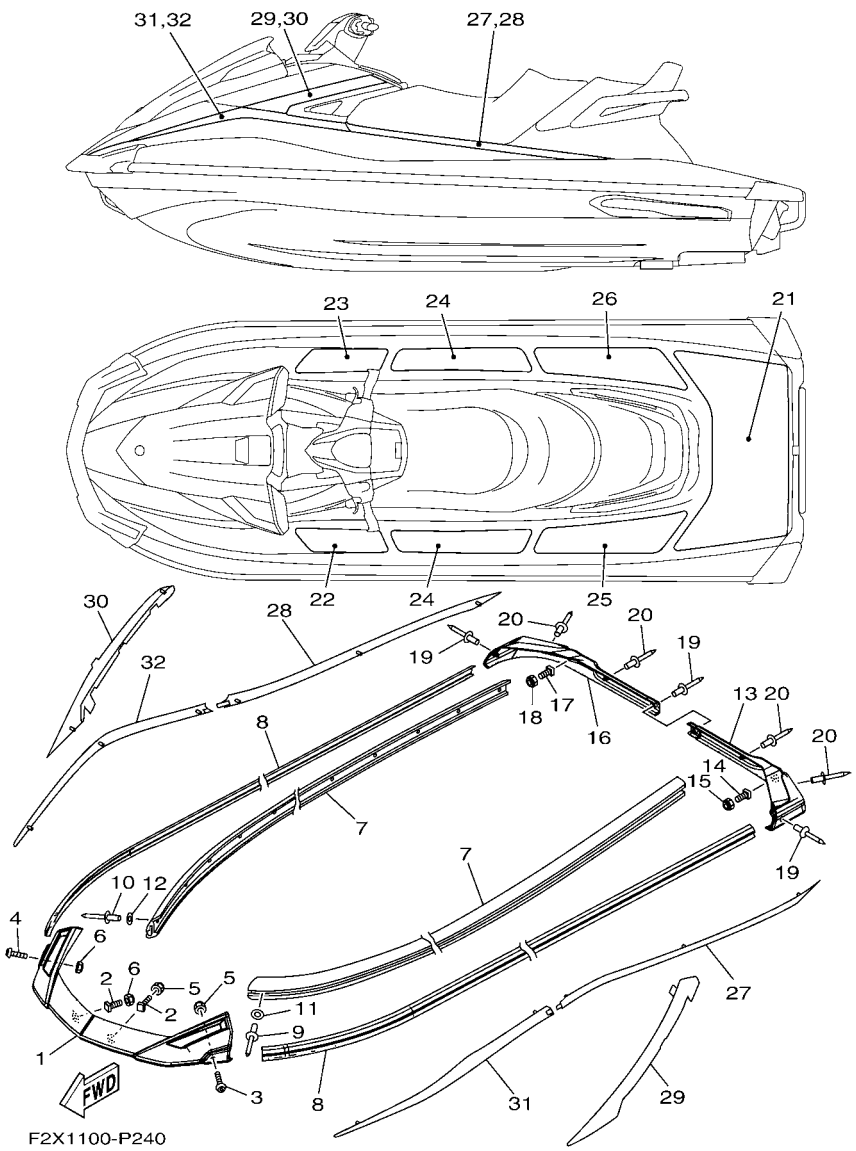

FIG. 24 GUNWALE & MAT

REF. NO.	PART NO.	DESCRIPTION	CAN	EUR	GENE			REMARKS
1	F2X–U2511–00	GUNWALE, BOW	1	1	1			CRUISER BLUE
	F2X–U2511–10	GUNWALE, BOW	1	1	1			CRUISER WHITE
	F2X–U2511–00	GUNWALE, BOW	1	1	1			DELUXE
2	F1W–U491K–00	BOLT, SPECIAL	2	2	2			
3	90111–06803	BOLT,HEX. SOCKET BUTTON	1	1	1			
4	90111–06803	BOLT,HEX. SOCKET BUTTON	1	1	1			
5	F2N–U142L–00	NUT, LOCK	2	2	2			
6	F2N–U142L–00	NUT, LOCK	2	2	2			
7	F2X–U2512–00	GUNWALE, SIDE	2	2	2			CRUISER BLUE
	F2X–U2512–10	GUNWALE, SIDE	2	2	2			CRUISER WHITE
	F2X–U2512–00	GUNWALE, SIDE	2	2	2			DELUXE
8	F2X–U2519–10	INNER,GUNWALE	2	2	2			CRUISER BLUE
	F2X–U2519–20	INNER,GUNWALE	2	2	2			CRUISER WHITE
	F2X–U2519–30	INNER,GUNWALE	2	2	2			DELUXE GRAY
	F2X–U2519–10	INNER,GUNWALE	2	2	2			DELUXE BLACK
9	90267–489U8	RIVET, BLIND	15	15	15			
10	90267–489U8	RIVET, BLIND	15	15	15			
11	9299R–05200	WASHER	15	15	15			
12	9299R–05200	WASHER	15	15	15			
13	F2X–U251D–00	GUNWALE, STERN 1	1	1	1			CRUISER BLUE
	F2X–U251D–10	GUNWALE, STERN 1	1	1	1			CRUISER WHITE
	F2X–U251D–00	GUNWALE, STERN 1	1	1	1			DELUXE
14	F1W–U491K–00	BOLT, SPECIAL	1	1	1			
15	F2N–U142L–00	NUT, LOCK	1	1	1			
16	F2X–U251E–00	GUNWALE, STERN 2	1	1	1			CRUISER BLUE
	F2X–U251E–10	GUNWALE, STERN 2	1	1	1			CRUISER WHITE
	F2X–U251E–00	GUNWALE, STERN 2	1	1	1			DELUXE

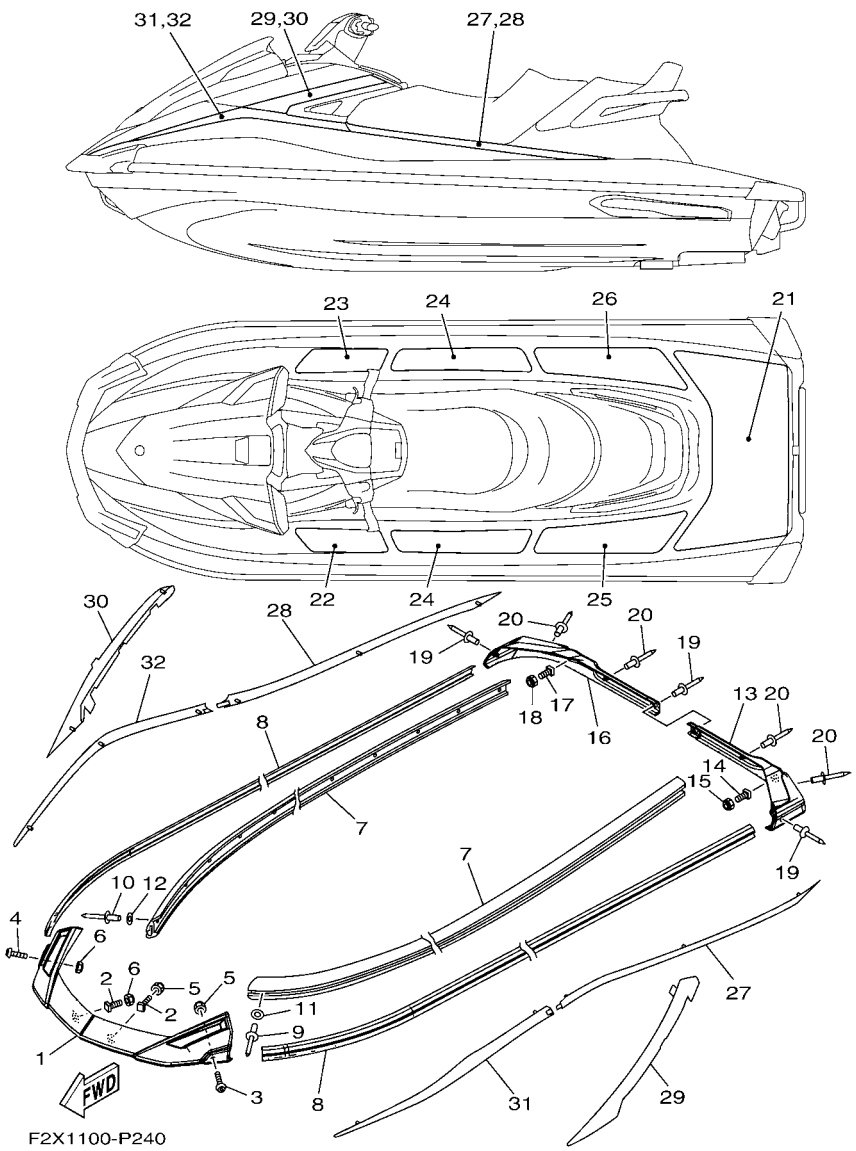

FIG. 24 GUNWALE & MAT

REF. NO.	PART NO.	DESCRIPTION	CAN	EUR	GENE			REMARKS
17	F1W–U491K–00	BOLT, SPECIAL	1	1	1			
18	F2N–U142L–00	NUT, LOCK	1	1	1			
19	90267–48825	RIVET, BLIND	3	3	3			
20	90267–48825	RIVET, BLIND	4	4	4			
21	F2X–U3581–01	MAT, UPPER	1	1	1			CRUISER BLUE
	F2X–U3581–20	MAT, UPPER	1	1	1			CRUISER WHITE
	F2X–U3581–30	MAT, UPPER	1	1	1			DELUXE GRAY
	F2X–U3581–01	MAT, UPPER	1	1	1			DELUXE BLACK
22	F2X–U351H–00	MAT, STEP 1	1	1	1			CRUISER BLUE
	F2X–U351H–20	MAT, STEP 1	1	1	1			CRUISER WHITE
	F2X–U351H–30	MAT, STEP 1	1	1	1			DELUXE GRAY
	F2X–U351H–00	MAT, STEP 1	1	1	1			DELUXE BLACK
23	F2X–U351J–00	MAT, STEP 2	1	1	1			CRUISER BLUE
	F2X–U351J–20	MAT, STEP 2	1	1	1			CRUISER WHITE
	F2X–U351J–30	MAT, STEP 2	1	1	1			DELUXE GRAY
	F2X–U351J–00	MAT, STEP 2	1	1	1			DELUXE BLACK
24	F2X–U351K–00	MAT, STEP 3	2	2	2			CRUISER BLUE
	F2X–U351K–20	MAT, STEP 3	2	2	2			CRUISER WHITE
	F2X–U351K–30	MAT, STEP 3	2	2	2			DELUXE GRAY
	F2X–U351K–00	MAT, STEP 3	2	2	2			DELUXE BLACK
25	F2X–U351M–00	MAT, STEP 4	1	1	1			CRUISER BLUE
	F2X–U351M–20	MAT, STEP 4	1	1	1			CRUISER WHITE
	F2X–U351M–30	MAT, STEP 4	1	1	1			DELUXE GRAY
	F2X–U351M–00	MAT, STEP 4	1	1	1			DELUXE BLACK
26	F2X–U351N–00	MAT, STEP 5	1	1	1			CRUISER BLUE
	F2X–U351N–20	MAT, STEP 5	1	1	1			CRUISER WHITE
	F2X–U351N–30	MAT, STEP 5	1	1	1			DELUXE GRAY

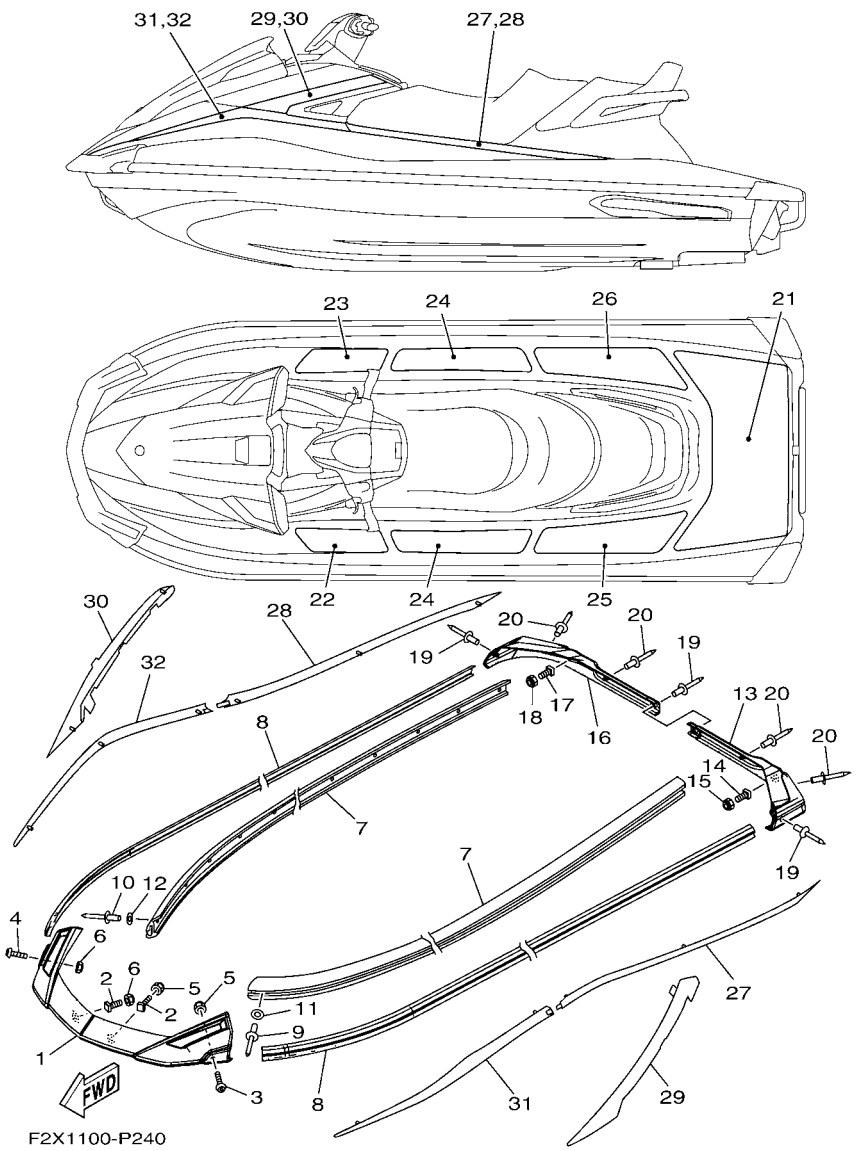

FIG. 24 GUNWALE & MAT

REF. NO.	PART NO.	DESCRIPTION	CAN	EUR	GENE			REMARKS
26	F2X–U351N–00	MAT, STEP 5	1	1	1			DELUXE BLACK
27	F2X–U89A8–10	ORNAMENT, STERN LH	1	1	1			CRUISER BLUE
	F2X–U89A8–00	ORNAMENT, STERN LH	1	1	1			CRUISER WHITE
	F2X–U89A8–20	ORNAMENT, STERN LH	1	1	1			DELUXE GRAY
	F2X–U89A8–10	ORNAMENT, STERN LH	1	1	1			DELUXE BLACK
28	F2X–U89A9–10	ORNAMENT, STERN RH	1	1	1			CRUISER BLUE
	F2X–U89A9–00	ORNAMENT, STERN RH	1	1	1			CRUISER WHITE
	F2X–U89A9–20	ORNAMENT, STERN RH	1	1	1			DELUXE GRAY
	F2X–U89A9–10	ORNAMENT, STERN RH	1	1	1			DELUXE BLACK
29	F2X–U89AA–10	ORNAMENT, MIDDLE LH	1	1	1			CRUISER BLUE
	F2X–U89AA–00	ORNAMENT, MIDDLE LH	1	1	1			CRUISER WHITE
	F2X–U89AA–20	ORNAMENT, MIDDLE LH	1	1	1			DELUXE GRAY
	F2X–U89AA–10	ORNAMENT, MIDDLE LH	1	1	1			DELUXE BLACK
30	F2X–U89AB–10	ORNAMENT, MIDDLE RH	1	1	1			CRUISER BLUE
	F2X–U89AB–00	ORNAMENT, MIDDLE RH	1	1	1			CRUISER WHITE
	F2X–U89AB–20	ORNAMENT, MIDDLE RH	1	1	1			DELUXE GRAY
	F2X–U89AB–10	ORNAMENT, MIDDLE RH	1	1	1			DELUXE BLACK
31	F2X–U89AC–10	ORNAMENT, BOW LH	1	1	1			CRUISER BLUE
	F2X–U89AC–00	ORNAMENT, BOW LH	1	1	1			CRUISER WHITE
	F2X–U89AC–20	ORNAMENT, BOW LH	1	1	1			DELUXE GRAY
	F2X–U89AC–10	ORNAMENT, BOW LH	1	1	1			DELUXE BLACK
32	F2X–U89AD–10	ORNAMENT, BOW RH	1	1	1			CRUISER BLUE
	F2X–U89AD–00	ORNAMENT, BOW RH	1	1	1			CRUISER WHITE
	F2X–U89AD–20	ORNAMENT, BOW RH	1	1	1			DELUXE GRAY
	F2X–U89AD–10	ORNAMENT, BOW RH	1	1	1			DELUXE BLACK

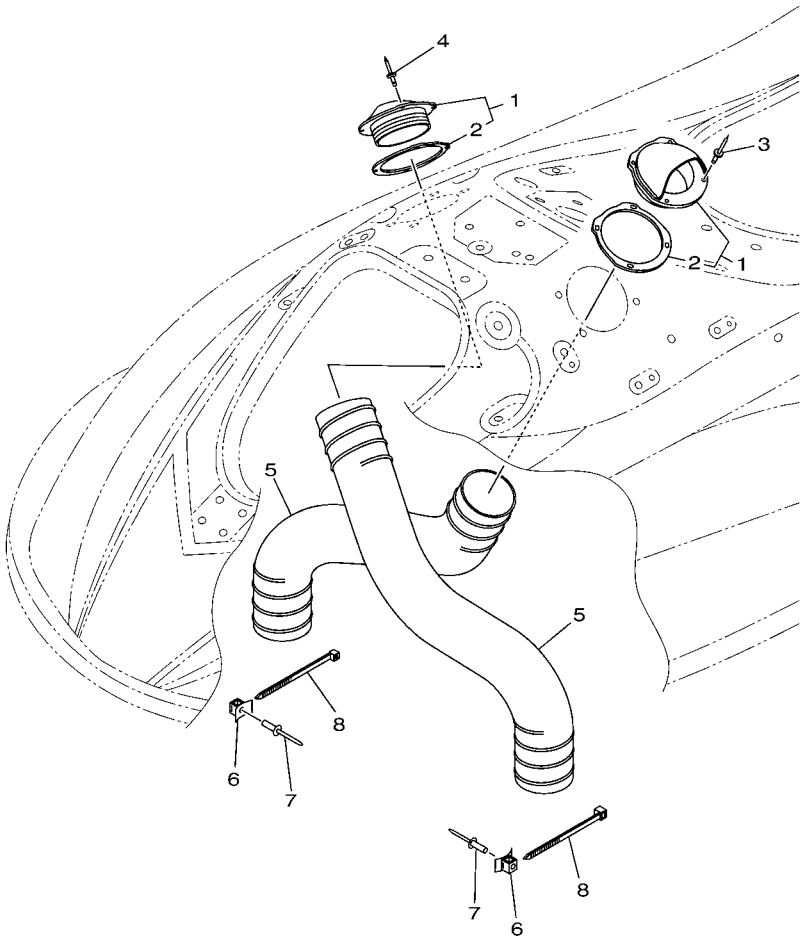

F2X1100-P250

FIG. 25 VENTILATION

REF. NO.	PART NO.	DESCRIPTION	CAN	EUR	GENE			REMARKS
1	F2X–U2127–00	BASE, AIR INTAKE	2	2	2			
2	F2X–U2157–00	.PACKING	1	1	1			
3	90267–48806	RIVET, BLIND	4	4	4			
4	90267–48806	RIVET, BLIND	4	4	4			
5	F2N–U213G–01	HOSE, VENTILATOR 2	2	2	2			
6	F1W–U828M–00	BASE, CLAMP	2	2	2			
7	90267–489U6	RIVET, BLIND	2	2	2			
8	90464–99804	CLAMP	2	2	2			

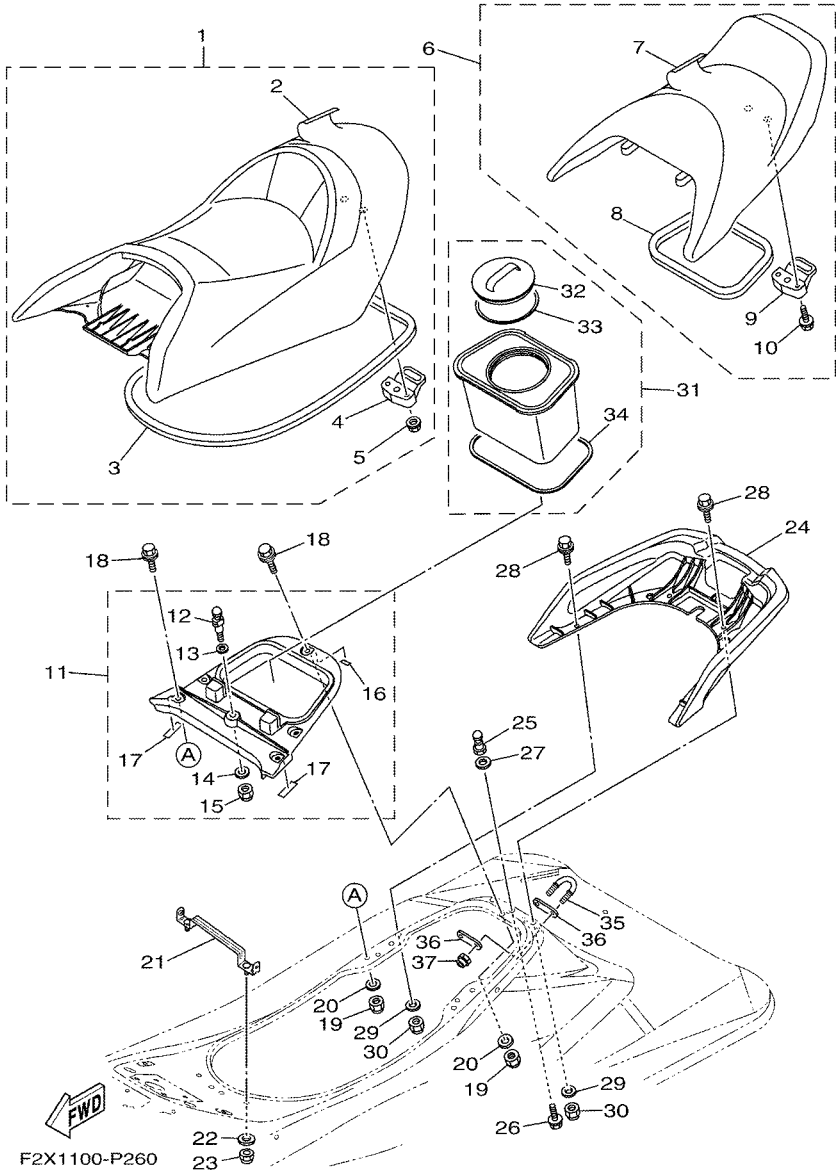

FIG. 26 SEAT & UNDER LOCKER

REF. NO.	PART NO.	DESCRIPTION	CAN	EUR	GENE			REMARKS
1	F2X–U371A–00	DOUBLE SEAT ASSY	1	1	1			CRUISER BLUE
	F2X–U371A–30	DOUBLE SEAT ASSY	1	1	1			CRUISER WHITE
	F2X–U371A–10	DOUBLE SEAT ASSY	1	1	1			DELUXE
2	F2X–U371B–00	.COVER, SEAT 1	1	1	1			CRUISER BLUE
	F2X–U371B–30	.COVER, SEAT 1	1	1	1			CRUISER WHITE
	F2X–U371B–10	.COVER, SEAT 1	1	1	1			DELUXE
3	F1W–U2664–01	.PACKING	1	1	1			
4	F2C–U3850–00	.SEAT LOCK ASSY	1	1	1			
5	90119–069UP	.BOLT, WITH WASHER	2	2	2			
6	F2X–U372A–00	SINGLE SEAT ASSY	1	1	1			CRUISER BLUE
	F2X–U372A–30	SINGLE SEAT ASSY	1	1	1			CRUISER WHITE
	F2X–U372A–10	SINGLE SEAT ASSY	1	1	1			DELUXE
7	F2X–U372B–00	.COVER, SEAT	1	1	1			CRUISER BLUE
	F2X–U372B–30	.COVER, SEAT	1	1	1			CRUISER WHITE
	F2X–U372B–10	.COVER, SEAT	1	1	1			DELUXE
8	F2C–U266D–01	.PACKING 5	1	1	1			
9	F1B–U3850–02	.SEAT LOCK ASSY	1	1	1			
10	90119–069UP	.BOLT, WITH WASHER	2	2	2			
11	F2S–U890L–04	DECK BEAM ASSY	1	1	1			
12	GH1–U3774–00	.PIN	1	1	1			
13	90201–109U6	.WASHER, PLATE	1	1	1			
14	9299R–10200	.WASHER	1	1	1			
15	9572R–10300	.NUT, NYLON	1	1	1			
16	F2S–U375E–00	.PACKING 1	1	1	1			
17	F2S–U8244–00	.PACKING	2	2	2			
18	90119–08828	BOLT, WITH WASHER	5	5	5			
19	9572R–08300	NUT, FLANGE	5	5	5			

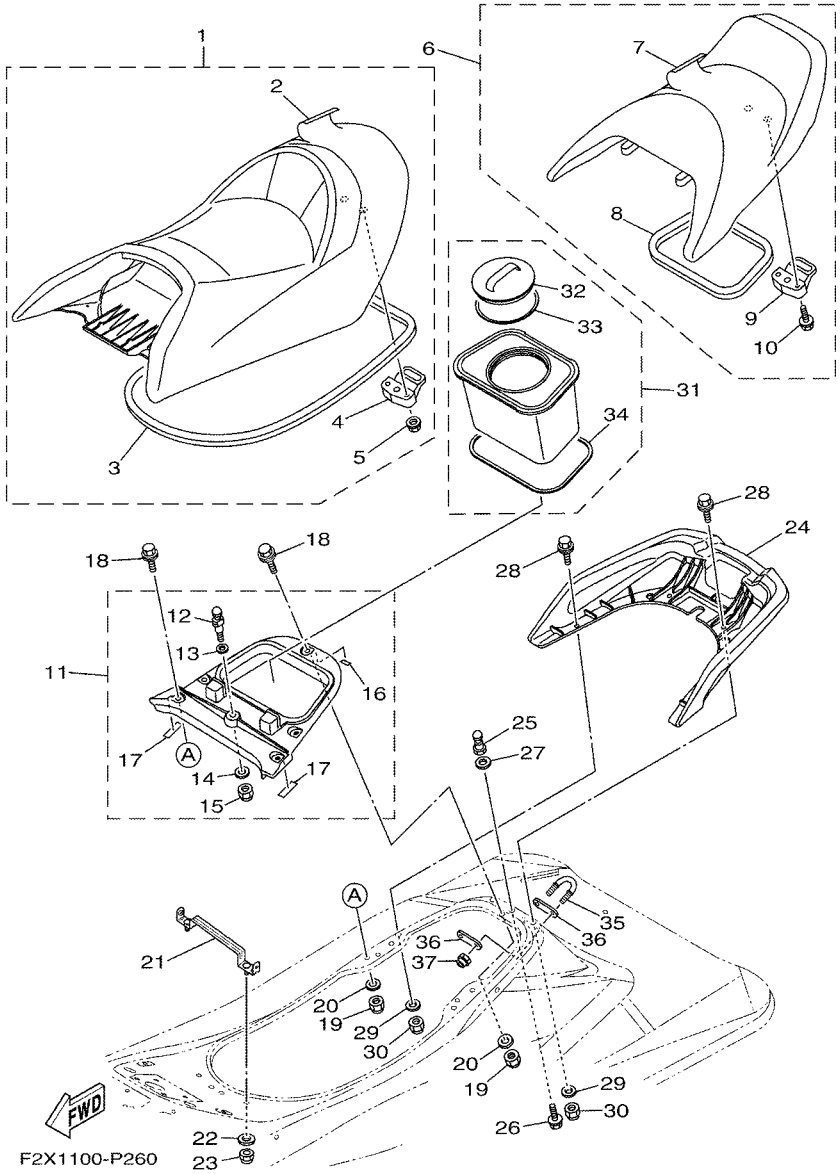

FIG. 26 SEAT & UNDER LOCKER

REF. NO.	PART NO.	DESCRIPTION	CAN	EUR	GENE			REMARKS
20	9299R–08200	WASHER	5	5	5			
21	F2X–U378C–00	STAY, SEAT 1	1	1	1			
22	90201–099U3	WASHER, PLATE	2	2	2			
23	9572R–08300	NUT, FLANGE	2	2	2			
24	F2X–U271B–00	GRIP, HAND	1	1	1			CRUISER BLUE
	F2X–U271B–10	GRIP, HAND	1	1	1			CRUISER WHITE
	F2X–U271B–00	GRIP, HAND	1	1	1			DELUXE
25	F1K–U3774–00	PIN	1	1	1			
26	90119–10804	BOLT, WITH WASHER	1	1	1			
27	9299R–10200	WASHER	1	1	1			
28	90119–08828	BOLT, WITH WASHER	4	4	4			
29	9299R–08200	WASHER	4	4	4			
30	9572R–08300	NUT, FLANGE	4	4	4			
31	F2X–U591A–00	CASE,ASSY 1	1	1	1			
32	F2C–U591C–00	.CAP,CASE	1	1	1			
33	F2C–U591D–01	.PACKING,CASE	1	1	1			
34	F2C–U266E–00	.PACKING,6	1	1	1			
35	F2N–U1628–02	STERN EYE	1	1	1			
36	GP7–U4953–10	PLATE A	2	2	2			
37	9572R–08300	NUT, FLANGE	2	2	2			

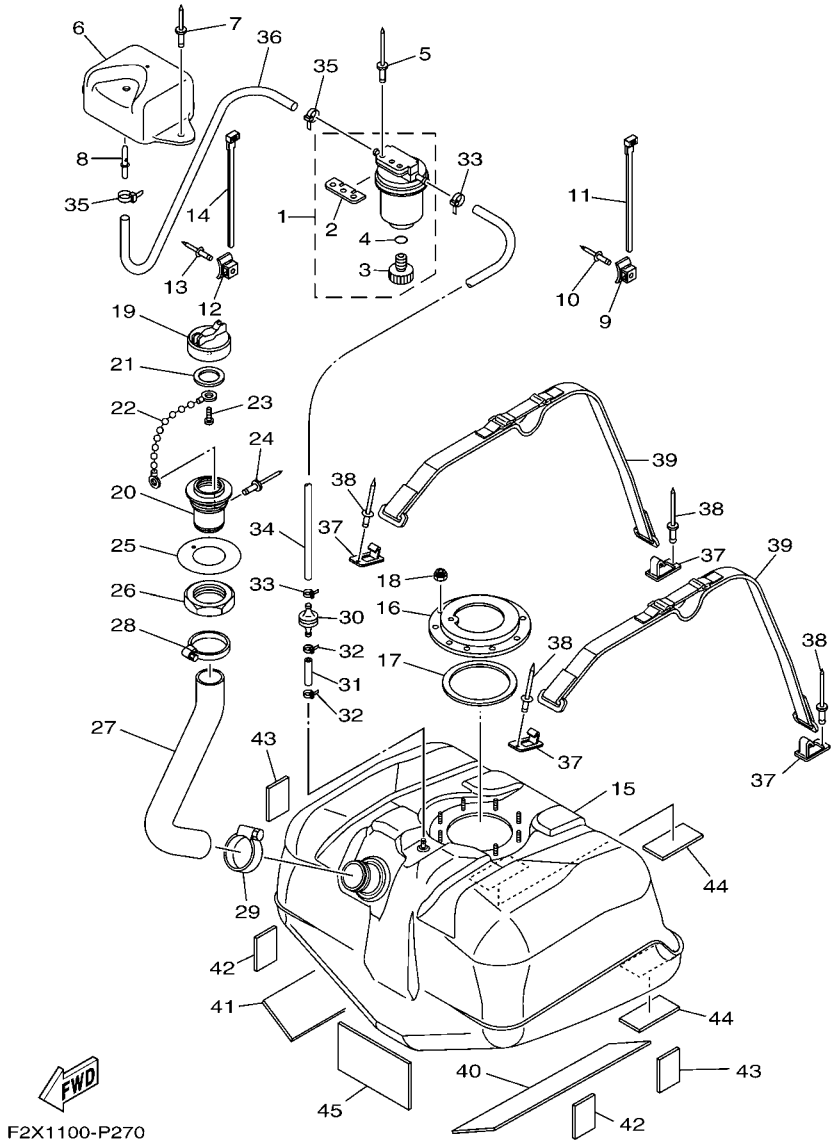

FIG. 27 FUEL TANK

REF. NO.	PART NO.	DESCRIPTION	CAN	EUR	GENE			REMARKS
1	F2F–6214A–00	FILTER, VENT ASSY	1	1	1			
2	EW2–62142–00	.PLATE, FILTER	1	1	1			
3	70R–24543–00	.PLUG, DRAIN	1	1	1			
4	70R–24489–00	.O-RING	1	1	1			
5	90267–489U2	RIVET, BLIND	2	2	2			
6	GP7–62159–02	SOCKET, VENTILATION	1	1	1			
7	90267–489U6	RIVET, BLIND	2	2	2			
8	F1G–62149–00	PIPE, VENTILATION	1	1	1			
9	F1W–U828M–00	BASE, CLAMP	1	1	1			
10	90267–489U6	RIVET, BLIND	1	1	1			
11	90464–32801	CLAMP	1	1	1			
12	F1W–U828M–00	BASE, CLAMP	1	1	1			
13	90267–489U6	RIVET, BLIND	1	1	1			
14	90464–32801	CLAMP	1	1	1			
15	F2S–U7711–02	TANK, FUEL	1	1	1			
16	F1B–U7773–00	RING	1	1	1			
17	F1B–67747–00	PACKING, SEAL	1	1	1			
18	9572R–06300	NUT, NYLON	9	9	9			
19	F2X–U7831–00	CAP, FUEL FILLER	1	1	1			
20	F2X–U7833–00	SOCKET	1	1	1			
21	GP7–U7832–01	PACKING	1	1	1			
22	GP7–U7835–00	CHAIN BALL	1	1	1			
23	90169–049U1	TAPPING SCREW	1	1	1			
24	90267–329UR	RIVET, BLIND	1	1	1			
25	GP7–U7834–10	PACKING FUEL FILLER	1	1	1			
26	GP7–U783F–00	NUT, FUEL FILLER	1	1	1			
27	F2X–U7844–01	HOSE	1	1	1			

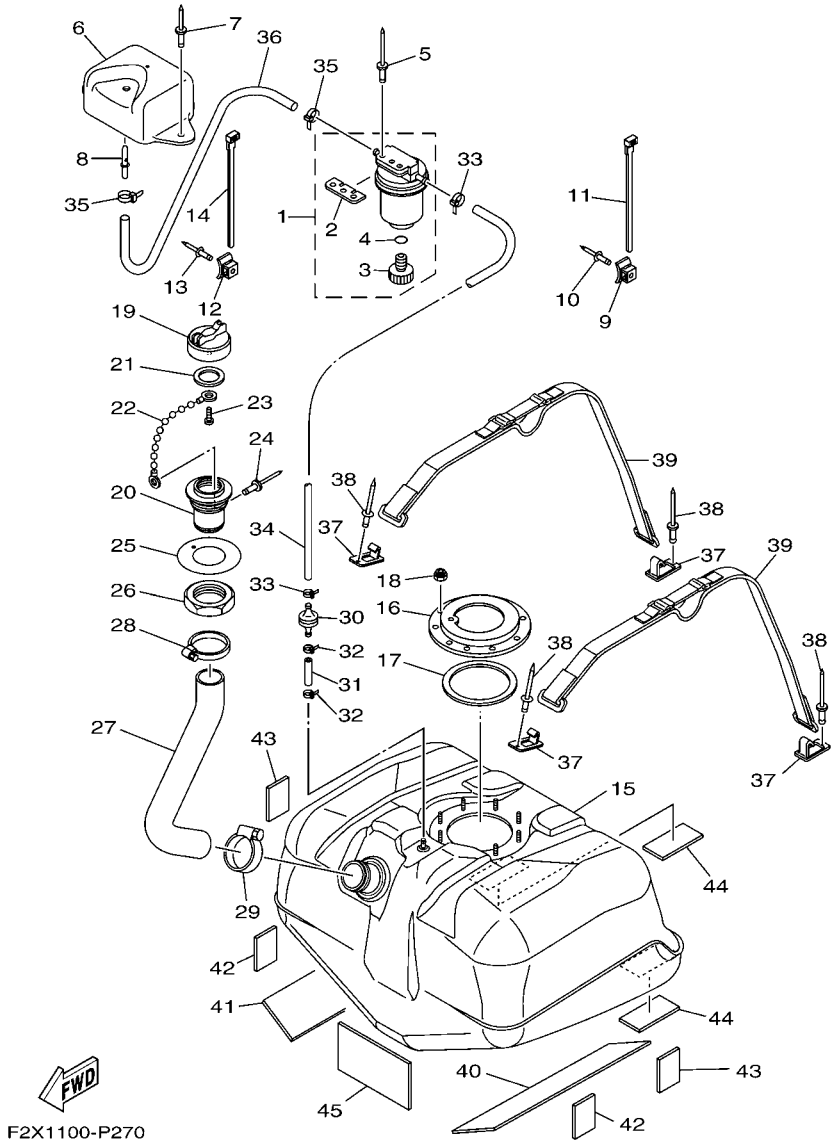

FIG. 27 FUEL TANK

REF. NO.	PART NO.	DESCRIPTION	CAN	EUR	GENE			REMARKS
28	90601–155U4	BAND, HOSE 55	1	1	1			
29	90601–155U4	BAND, HOSE 55	1	1	1			
30	EU0–67767–31	CHECK VALVE	1	1	1			
31	GP7–U785H–00	HOSE, AIR VENT 3	1	1	1			
32	90465–11829	CLAMP	2	2	2			
33	90465–11829	CLAMP	2	2	2			
34	F1K–U785G–00	HOSE, AIR VENT	1	1	1			
35	90465–11829	CLAMP	2	2	2			
36	F0D–U7856–10	HOSE, AIR VENT 3	1	1	1			
37	F1K–U5772–04	HOOK A	4	4	4			
38	90267–489U1	RIVET,BLIND	4	4	4			
39	F2S–67743–00	BELT, TANK 1	2	2	2			
40	F2S–U759B–00	MAT 1	1	1	1			
41	F2S–U759B–00	MAT 1	1	1	1			
42	F1W–U759C–01	MAT 2	2	2	2			
43	F1W–U759C–01	MAT 2	2	2	2			
44	F1K–U759C–00	MAT 2	2	2	2			
45	F1S–U8221–00	PAD, BATTERY	1	1	1			

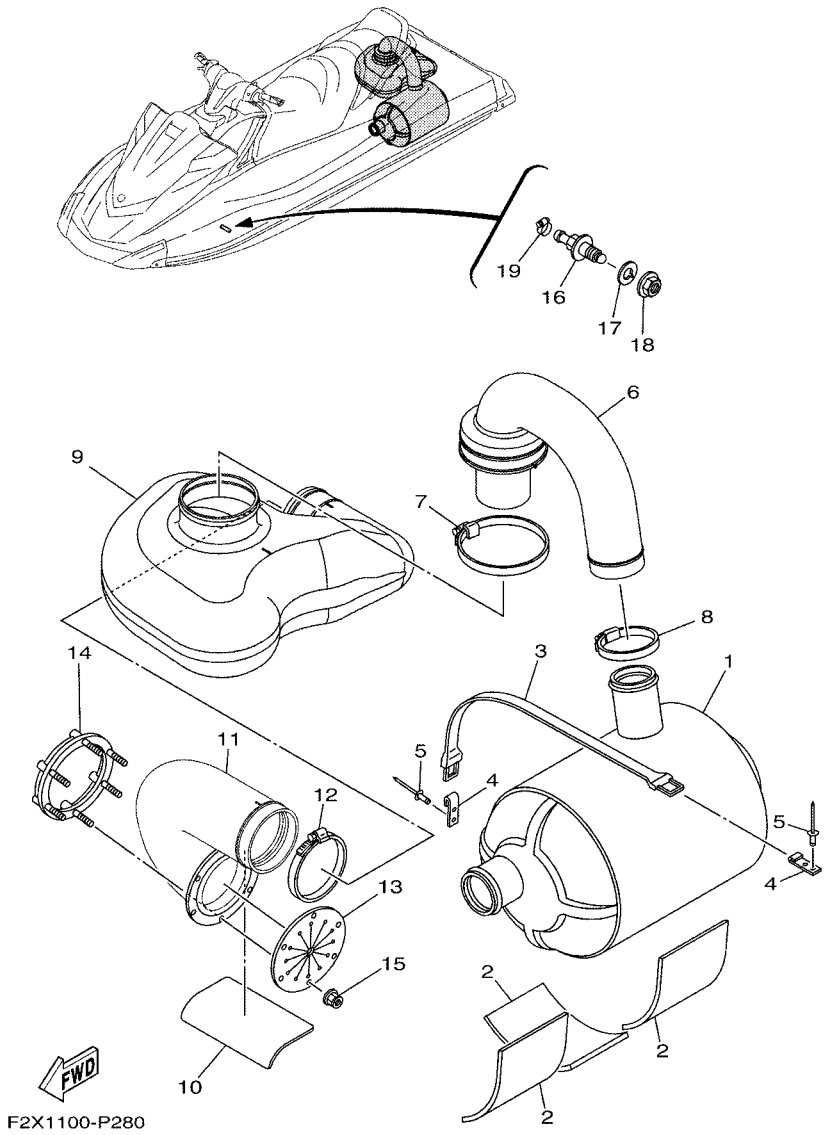

FIG. 28 EXHAUST 4

REF. NO.	PART NO.	DESCRIPTION	CAN	EUR	GENE			REMARKS
1	F2X–U7550–00	WATER LOCK COMP.	1	1	1			
2	F1S–U8221–00	PAD, BATTERY	3	3	3			
3	EW2–67821–00	BAND, FUEL TANK	1	1	1			
4	GA7–65772–00	HOOK A	2	2	2			
5	90267–489U1	RIVET,BLIND	4	4	4			
6	F2N–U7555–01	HOSE, EXHAUST	1	1	1			
7	90601–179U8	BAND, HOSE 79	1	1	1			
8	90450–99804	HOSE CLAMP ASSY	1	1	1			
9	F2N–U4261–00	TANK, WATER	1	1	1			
10	F1S–U8221–00	PAD, BATTERY	1	1	1			
11	F2N–U758D–00	HOSE,EXHAUST 3	1	1	1			
12	90450–99801	HOSE CLAMP ASSY	1	1	1			
13	F1B–U751G–00	VALVE, EXHAUST	1	1	1			
14	F1S–U757B–01	PLATE	1	1	1			
15	F2N–U142L–00	NUT, LOCK	6	6	6			
16	F2C–U753B–01	PILOT, WATER	1	1	1			
17	F2C–U7564–00	GASKET	1	1	1			
18	F2C–U2733–00	NUT	1	1	1			
19	90467–17802	CLIP	1	1	1			

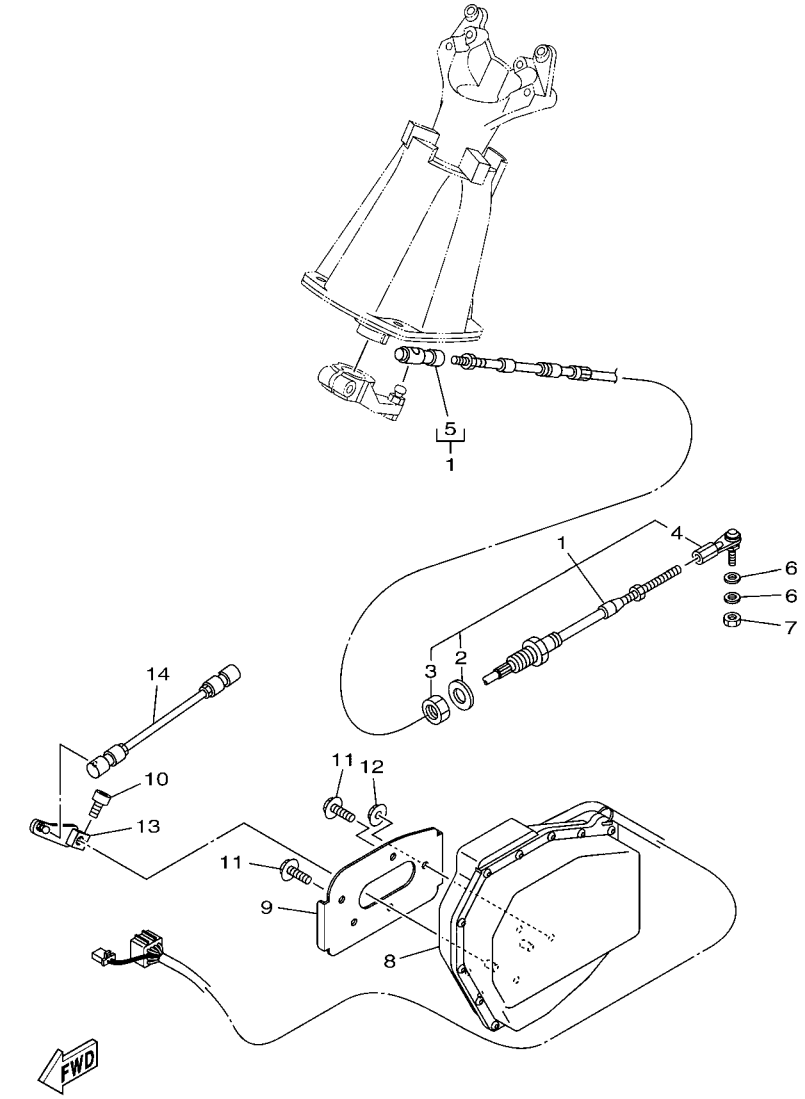

F2X1100-P290

FIG. 29 CONTROL CABLE

REF. NO.	PART NO.	DESCRIPTION	CAN	EUR	GENE			REMARKS
1	F2N–61481–00	CABLE, STEERING	1	1	1			
2	F1B–61438–00	.PACKING C	1	1	1			
3	F1B–6151S–00	.NUT	1	1	1			
4	F1B–61461–02	.STUD, JOINT BALL	1	1	1			
5	F2N–61460–00	.BALL JOINT ASSY	1	1	1			
6	90201–06906	WASHER, PLATE	2	2	2			
7	9538R–06700	NUT	1	1	1			
8	F2X–6140B–00	MOTOR ASSY.	1	1	1			
9	F3J–U8285–00	PLATE	1	1	1			
10	90110–06040	BOLT, HEXAGON SOCKET HEAD	1	1	1			
11	90119–08851	BOLT, WITH WASHER	2	2	2			
12	9572R–08300	NUT, FLANGE	3	3	3			
13	F3J–6150F–00	SHIFT ARM ASSY	1	1	1			
14	F3J–6150D–00	ROD ASSY 2	1	1	1			

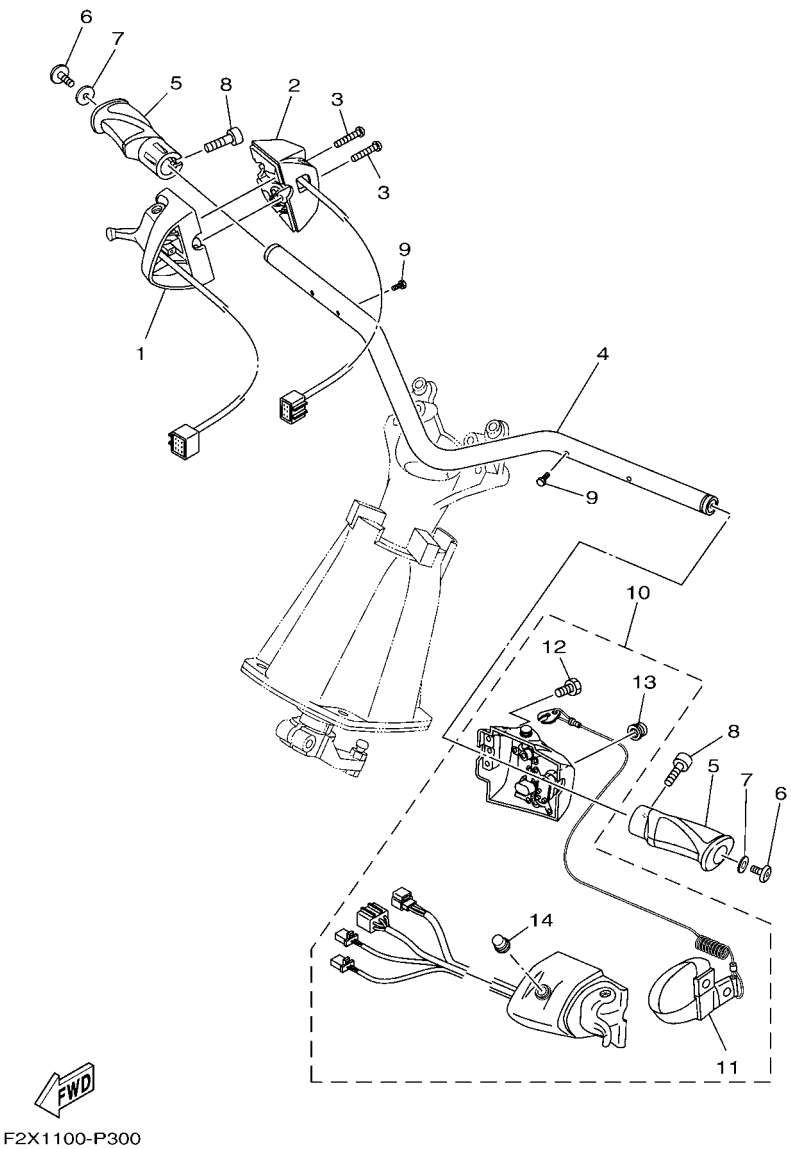

FIG. 30 STEERING 1

REF. NO.	PART NO.	DESCRIPTION	CAN	EUR	GENE			REMARKS
1	6CS–14305–10	THROTTLE LEVER COMP	1	1	1			
2	6CS–81860–00	SWITCH ASSY	1	1	1			
3	6CS–6725F–00	BOLT, THROTTLE	2	2	2			
4	F2X–U1552–00	HANDLE	1	1	1			
5	F2S–U155D–02	GRIP, HANDLE	2	2	2			
6	90110–06382	BOLT, HEXAGON SOCKET HEAD	2	2	2			
7	90201–068G0	WASHER, PLATE	2	2	2			
8	F2S–U1516–00	BOLT	2	2	2			
9	91380–04030	BOLT	2	2	2			
10	F2X–68310–00	SWITCH BOX ASSY	1	1	1			
11	EW2–68348–00	.LANYARD, STOP SWITCH	1	1	1			
12	6CS–6725F–00	.BOLT, THROTTLE	4	4	4			
13	FK7–68312–02	.STOP BUTTON COMP	1	1	1			
14	FK7–68313–02	.START BUTTON COMP.	1	1	1			

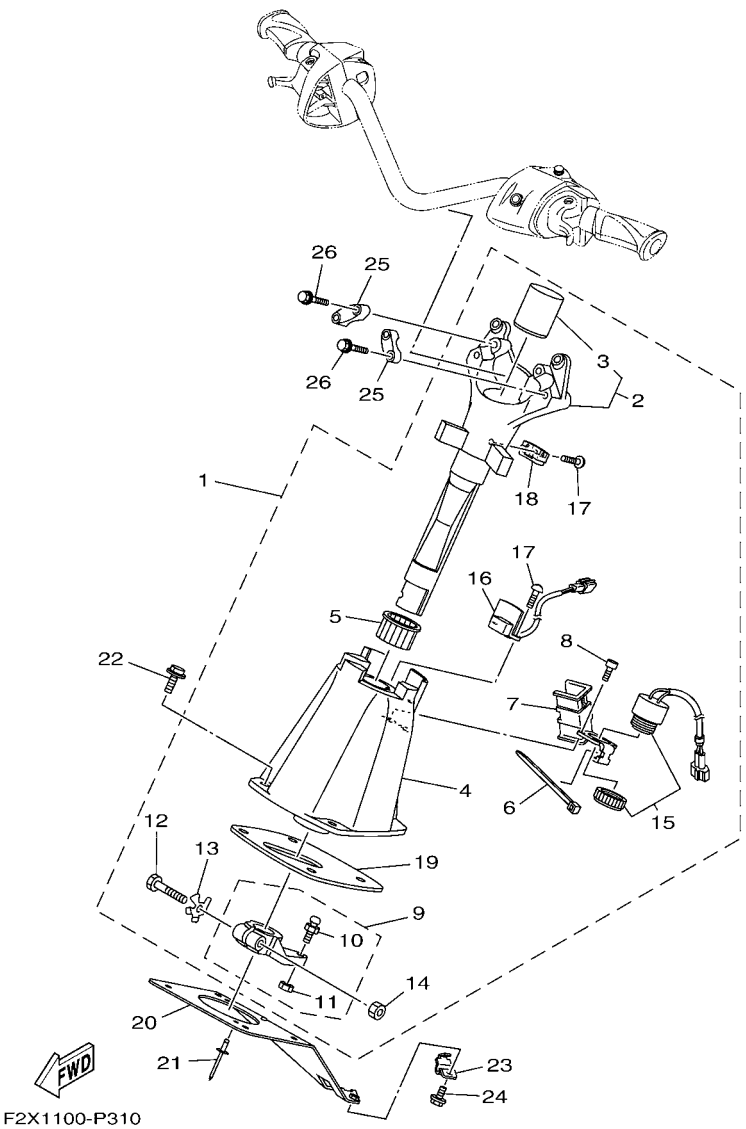

FIG. 31 STEERING 2

REF. NO.	PART NO.	DESCRIPTION	CAN	EUR	GENE			REMARKS
1	F2X–61400–00	STEERING MASTER ASSY	1	1	1			
2	F2X–67410–00	.SHAFT ASSY	1	1	1			
3	F2X–61435–00	..SEAL, PIPE 30	1	1	1			
4	F2X–6152M–00	.HOUSING ASSY	1	1	1			
5	F1K–6134M–00	.BUSH	1	1	1			
6	703–82591–00	.BAND	1	1	1			
7	F2X–6146H–00	.SPACER, BRKT.	1	1	1			
8	F1B–613C1–00	.SCREW	2	2	2			
9	F1K–6153R–00	.ARM ASSY.	1	1	1			
10	EU0–61461–02	..STUD, JOINT BALL	1	1	1			
11	95720–06300	..NUT, SELF-LOCKING	1	1	1			
12	F1K–61355–00	.BOLT	1	1	1			
13	F1K–6142B–00	.PLATE, RETAINING	1	1	1			
14	95720–08300	.NUT, SELF-LOCKING	1	1	1			
15	F1S–68341–00	.BUZZER	1	1	1			
16	F2X–6838B–00	.SENSOR, MAGNET	1	1	1			
17	F2X–613C1–00	.SCREW	3	3	3			
18	F2X–6838C–00	.MAGNET	1	1	1			
19	F1K–6143C–00	.SEAL, RUBBER	1	1	1			
20	F1K–U1467–01	BRACKET,STOPPER CABLE	1	1	1			
21	90267–489U2	RIVET, BLIND	2	2	2			
22	90119–08836	BOLT, WITH WASHER	4	4	4			
23	F1K–U1468–03	STOPPER, CABLE	1	1	1			
24	90119–069UH	BOLT, WITH WASHER	1	1	1			
25	EU0–23814–31	HOLDER, HANDLE UPPER	2	2	2			
26	90119–08827	BOLT, WITH WASHER	4	4	4			

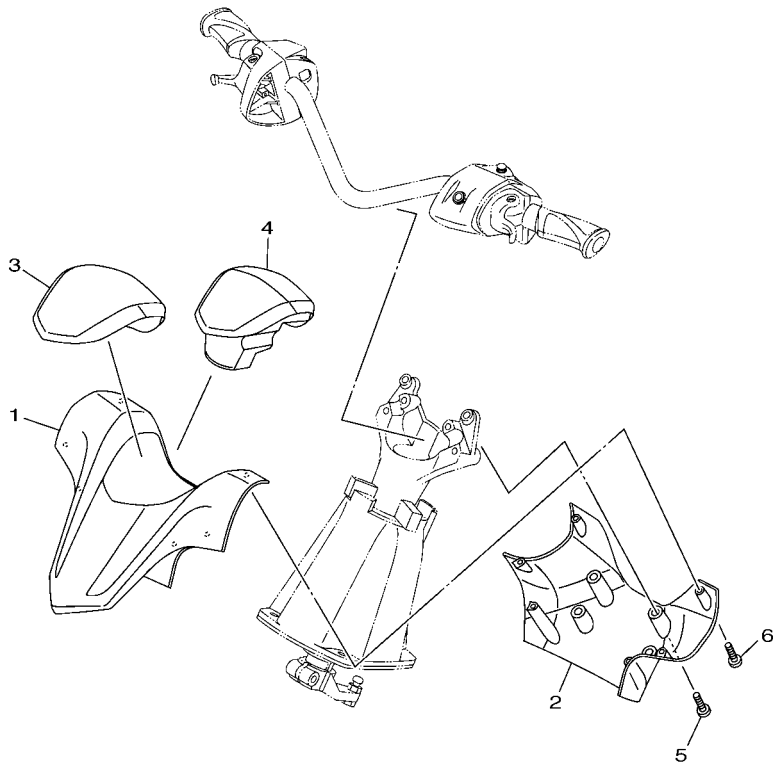

F2X1100-P320

FIG. 32 STEERING 3

REF. NO.	PART NO.	DESCRIPTION	CAN	EUR	GENE			REMARKS
1	F2X–U143D–00	PAD, STEERING 1	1	1	1			CRUISER BLUE
	F2X–U143D–10	PAD, STEERING 1	1	1	1			CRUISER WHITE
	F2X–U143D–00	PAD, STEERING 1	1	1	1			DELUXE
2	F2X–U143E–00	PAD, STEERING 2	1	1	1			CRUISER BLUE
	F2X–U143E–10	PAD, STEERING 2	1	1	1			CRUISER WHITE
	F2X–U143E–00	PAD, STEERING 2	1	1	1			DELUXE
3	F2X–U142D–00	COVER, PAD	1	1	1			CRUISER BLUE
	F2X–U142D–10	COVER, PAD	1	1	1			CRUISER WHITE
	F2X–U142D–00	COVER, PAD	1	1	1			DELUXE
4	F2X–U156E–00	PAD 1	1	1	1			
5	90154–06017	SCREW, BINDING	4	4	4			
6	90149–05903	SCREW	6	6	6			

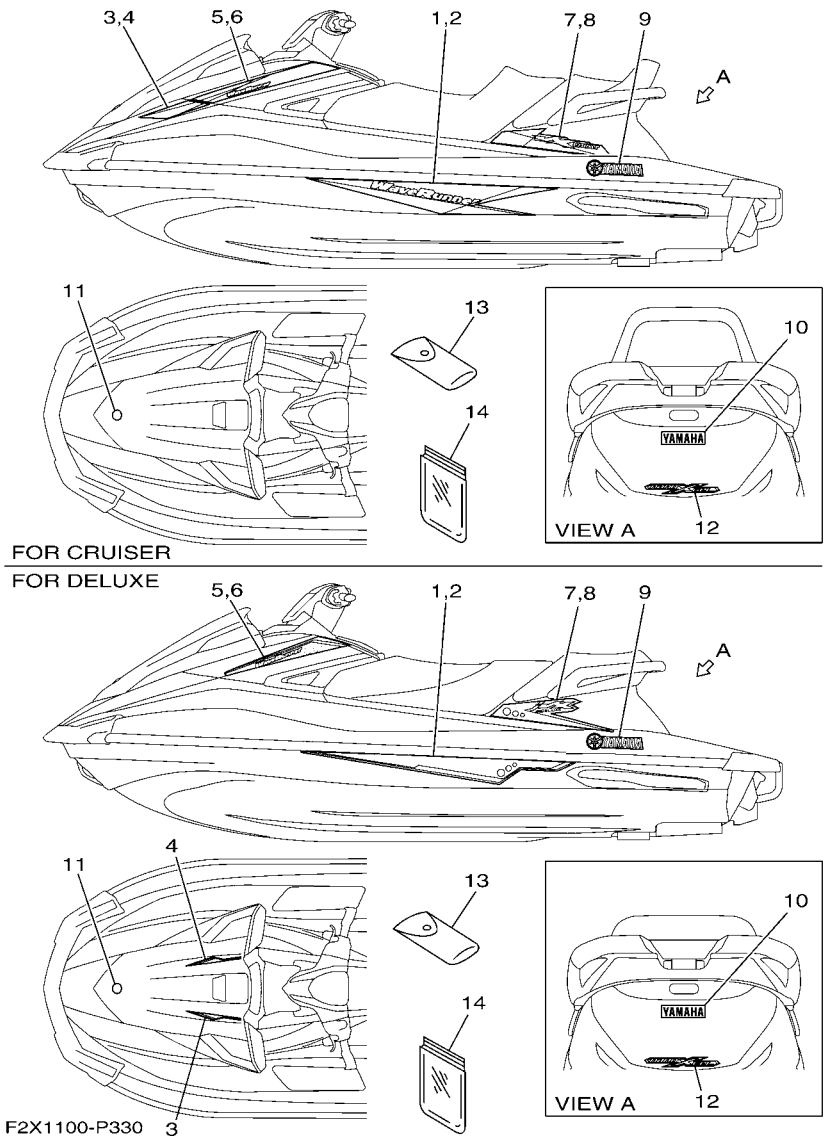

FIG. 33 GRAPHICS

REF. NO.	PART NO.	DESCRIPTION	CAN	EUR	GENE			REMARKS
1	F2X–U417B–00	GRAPHIC 1 (LH)	1	1	1			CRUISER BLUE
	F2X–U417B–10	GRAPHIC 1 (LH)	1	1	1			CRUISER WHITE
	F2X–U417B–20	GRAPHIC 1 (LH)	1	1	1			DELUXE GRAY
	F2X–U417B–30	GRAPHIC 1 (LH)	1	1	1			DELUXE BLACK
2	F2X–U417C–00	GRAPHIC 2 (RH)	1	1	1			CRUISER BLUE
	F2X–U417C–10	GRAPHIC 2 (RH)	1	1	1			CRUISER WHITE
	F2X–U417C–20	GRAPHIC 2 (RH)	1	1	1			DELUXE GRAY
	F2X–U417C–30	GRAPHIC 2 (RH)	1	1	1			DELUXE BLACK
3	F2X–U417D–00	GRAPHIC 3 (LH)	1	1	1			CRUISER BLUE
	F2X–U417D–10	GRAPHIC 3 (LH)	1	1	1			CRUISER WHITE
	F2X–U417D–20	GRAPHIC 3 (LH)	1	1	1			DELUXE GRAY
	F2X–U417D–30	GRAPHIC 3 (LH)	1	1	1			DELUXE BLACK
4	F2X–U417E–00	GRAPHIC 4 (RH)	1	1	1			CRUISER BLUE
	F2X–U417E–10	GRAPHIC 4 (RH)	1	1	1			CRUISER WHITE
	F2X–U417E–20	GRAPHIC 4 (RH)	1	1	1			DELUXE GRAY
	F2X–U417E–30	GRAPHIC 4 (RH)	1	1	1			DELUXE BLACK
5	F2X–U417F–00	GRAPHIC 5 (LH)	1	1	1			CRUISER BLUE
	F2X–U417F–10	GRAPHIC 5 (LH)	1	1	1			CRUISER WHITE
	F2X–U417F–20	GRAPHIC 5 (LH)	1	1	1			DELUXE GRAY
	F2X–U417F–30	GRAPHIC 5 (LH)	1	1	1			DELUXE BLACK
6	F2X–U417G–00	GRAPHIC 6 (RH)	1	1	1			CRUISER BLUE
	F2X–U417G–10	GRAPHIC 6 (RH)	1	1	1			CRUISER WHITE
	F2X–U417G–20	GRAPHIC 6 (RH)	1	1	1			DELUXE GRAY
	F2X–U417G–30	GRAPHIC 6 (RH)	1	1	1			DELUXE BLACK
7	F2X–U417H–00	GRAPHIC 7 (LH)	1	1	1			CRUISER BLUE
	F2X–U417H–10	GRAPHIC 7 (LH)	1	1	1			CRUISER WHITE
	F2X–U417H–20	GRAPHIC 7 (LH)	1	1	1			DELUXE GRAY

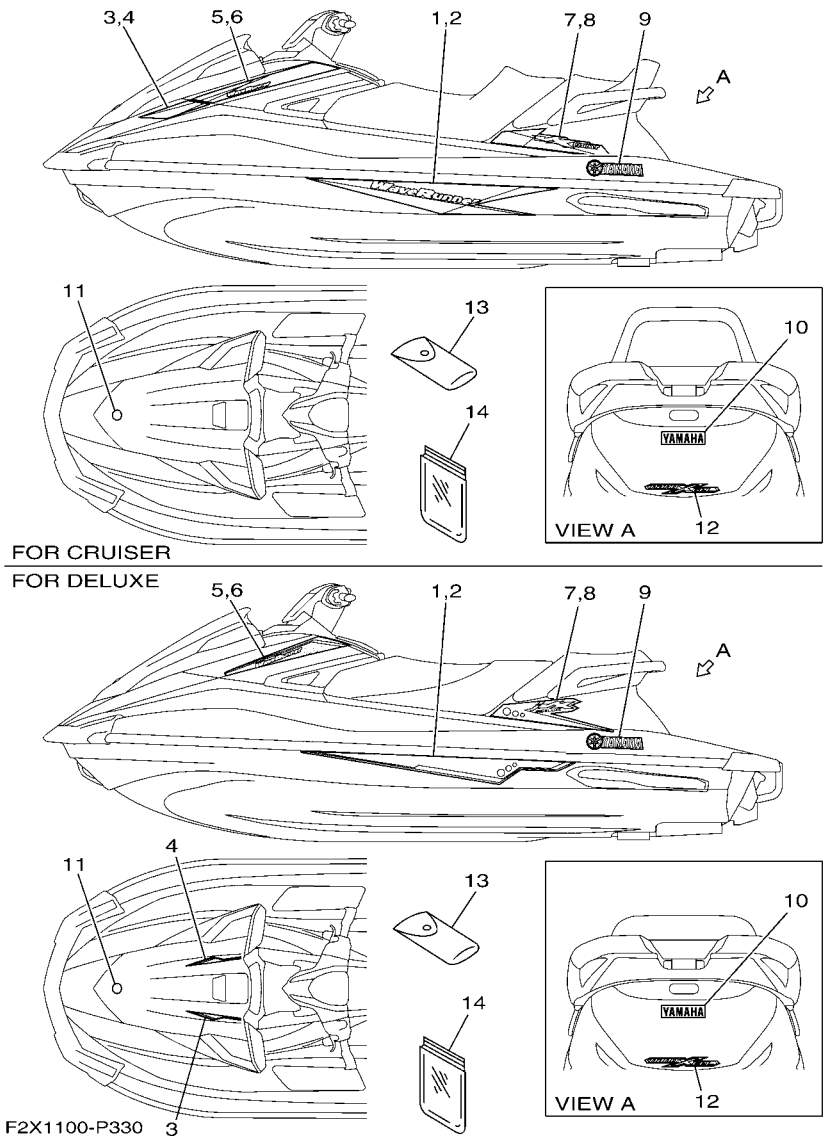

FIG. 33 GRAPHICS

REF. NO.	PART NO.	DESCRIPTION	CAN	EUR	GENE			REMARKS
7	F2X–U417H–30	GRAPHIC 7 (LH)	1	1	1			DELUXE BLACK
8	F2X–U417J–00	GRAPHIC 8 (RH)	1	1	1			CRUISER BLUE
	F2X–U417J–10	GRAPHIC 8 (RH)	1	1	1			CRUISER WHITE
	F2X–U417J–20	GRAPHIC 8 (RH)	1	1	1			DELUXE GRAY
	F2X–U417J–30	GRAPHIC 8 (RH)	1	1	1			DELUXE BLACK
9	F2P–U411C–00	EMBLEM, YAMAHA	2	2	2			CRUISER BLUE
	F2N–U411C–00	EMBLEM, YAMAHA	2	2	2			CRUISER WHITE
	F1X–U411C–60	EMBLEM, YAMAHA	2	2	2			DELUXE GRAY
	F2P–U411C–A0	EMBLEM, YAMAHA	2	2	2			DELUXE BLACK
10	F2P–U4114–00	MARK, YAMAHA A	1	1	1			CRUISER BLUE
	F1B–U411C–02	EMBLEM, YAMAHA	1	1	1			CRUISER WHITE
	F1X–U4114–60	MARK, YAMAHA A	1	1	1			DELUXE GRAY
	F2P–U4114–A0	MARK, YAMAHA A	1	1	1			DELUXE BLACK
11	F2S–6411H–00	EMBLEM, TUNING FORK	1	1	1			
12	F1W–U4121–00	EMBLEM A	1	1	1			
13	F1B–65986–13	TOOL SET	1	1	1			
14	EU0–65901–02	TOOL BAG	1	1	1			

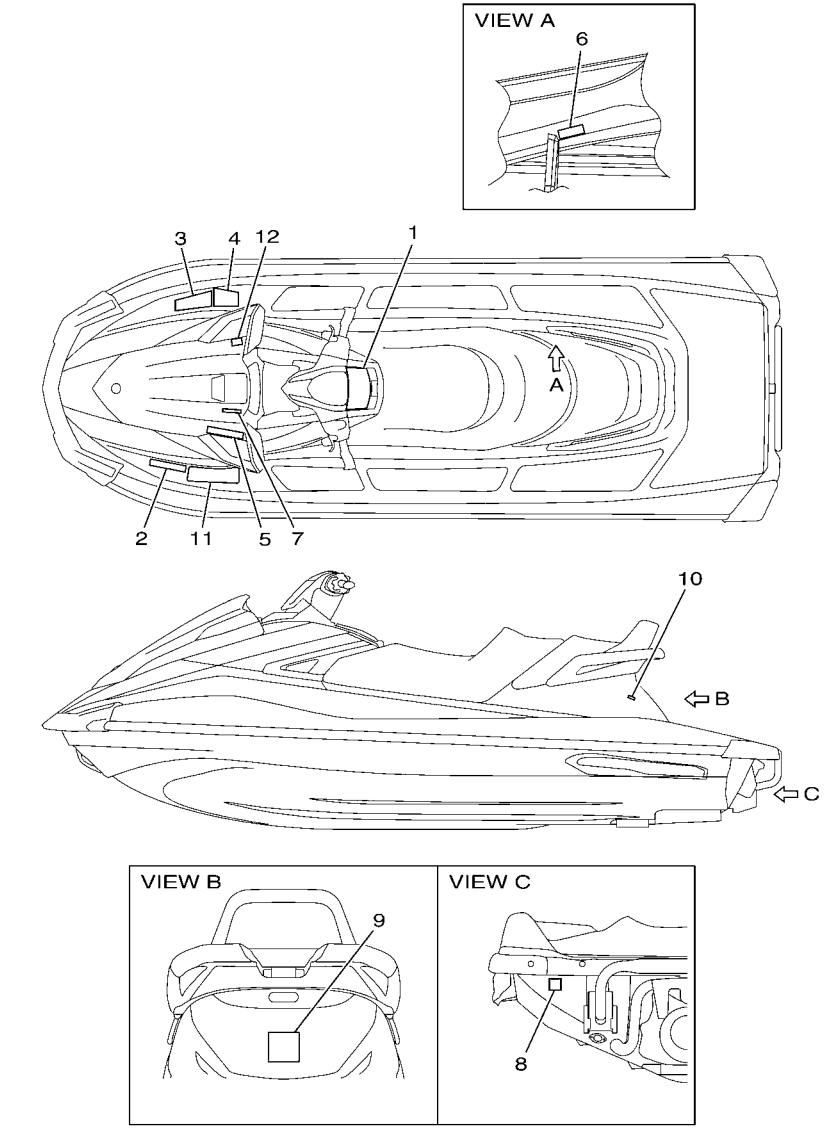

F2X1100-P340

FIG. 34 IMPORTANT LABELS

REF. NO.	PART NO.	DESCRIPTION	CAN	EUR	GENE			REMARKS
1	F2X–U41B1–10	LABEL, WARNING UNIFORM 1	1	1	1			
2	F1B–U41B1–21	LABEL, WARNING UNIFORM 1	1	1	1			CRUISER BLUE
	F2S–U41B1–20	LABEL, WARNING UNIFORM 1	1	1	1			CRUISER WHITE
	F1B–U41B1–21	LABEL, WARNING UNIFORM 1	1	1	1			DELUXE
3	F1B–U41B1–31	LABEL, WARNING UNIFORM 1	1	1	1			CRUISER BLUE
	F2S–U41B1–30	LABEL, WARNING UNIFORM 1	1	1	1			CRUISER WHITE
	F1B–U41B1–31	LABEL, WARNING UNIFORM 1	1	1	1			DELUXE
4	F1B–U41B2–01	LABEL, WARNING UNIFORM 2	1	1	1			CRUISER BLUE
	F0M–U41B2–11	LABEL, WARNING UNIFORM 2	1	1	1			CRUISER WHITE
	F1B–U41B2–01	LABEL, WARNING UNIFORM 2	1	1	1			DELUXE
5	F1S–U415B–11	LABEL, WARNING(FUEL)	1	1	1			CRUISER BLUE
	F1B–U415B–11	LABEL, WARNING(FUEL)	1	1	1			CRUISER WHITE
	F1S–U415B–11	LABEL, WARNING(FUEL)	1	1	1			DELUXE
6	F0V–U41DB–12	LABEL, WARNING BATTERY	1	1	1			
7	F1B–U41F5–21	LABEL, FIRE EXTINGUISHER 1	1	1	1			CRUISER BLUE
	F1B–U41F5–11	LABEL, FIRE EXTINGUISHER 1	1	1	1			CRUISER WHITE
	F1B–U41F5–21	LABEL, FIRE EXTINGUISHER 1	1	1	1			DELUXE
8	F1G–U418F–00	LABEL, RIGHTING	1	1	1			
9	F1S–U41E1–11	LABEL, SET 1	1	1	1			CRUISER BLUE
	F2S–U41E1–10	LABEL, SET 1	1	1	1			CRUISER WHITE
	F1S–U41E1–11	LABEL, SET 1	1	1	1			DELUXE
10	F1S–U419E–01	LABEL 4	1					CRUISER BLUE CAN
	GJ3–U419E–00	LABEL 4	1					CRUISER WHITE CAN
	F1S–U419E–01	LABEL 4	1					DELUXE CAN
11	GP8–U416H–01	LABEL,WARNING(FRANCE)		1				CRUISER BLUE EUR
	GJ3–U416H–01	LABEL,WARNING(FRANCE)		1				CRUISER WHITE EUR
	GP8–U416H–01	LABEL,WARNING(FRANCE)		1				DELUXE EUR

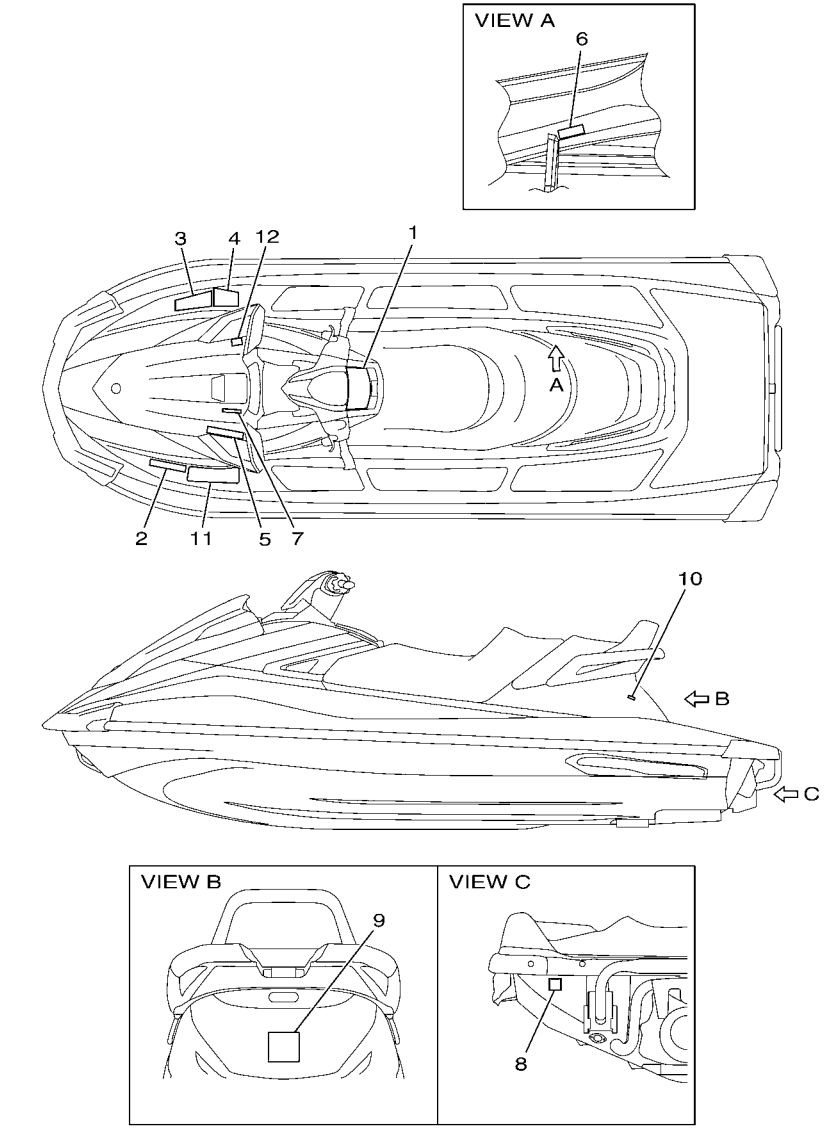

F2X1100-P340

FIG. 34 IMPORTANT LABELS

REF. NO.	PART NO.	DESCRIPTION	CAN	EUR	GENE			REMARKS
12	F1X–U413P–02	LABEL, BUILDERS PLATE		1				CRUISER BLUE EUR
	F2S–U413P–00	LABEL, BUILDERS PLATE		1				CRUISER WHITE EUR
	F1X–U413P–02	LABEL, BUILDERS PLATE		1				DELUXE EUR

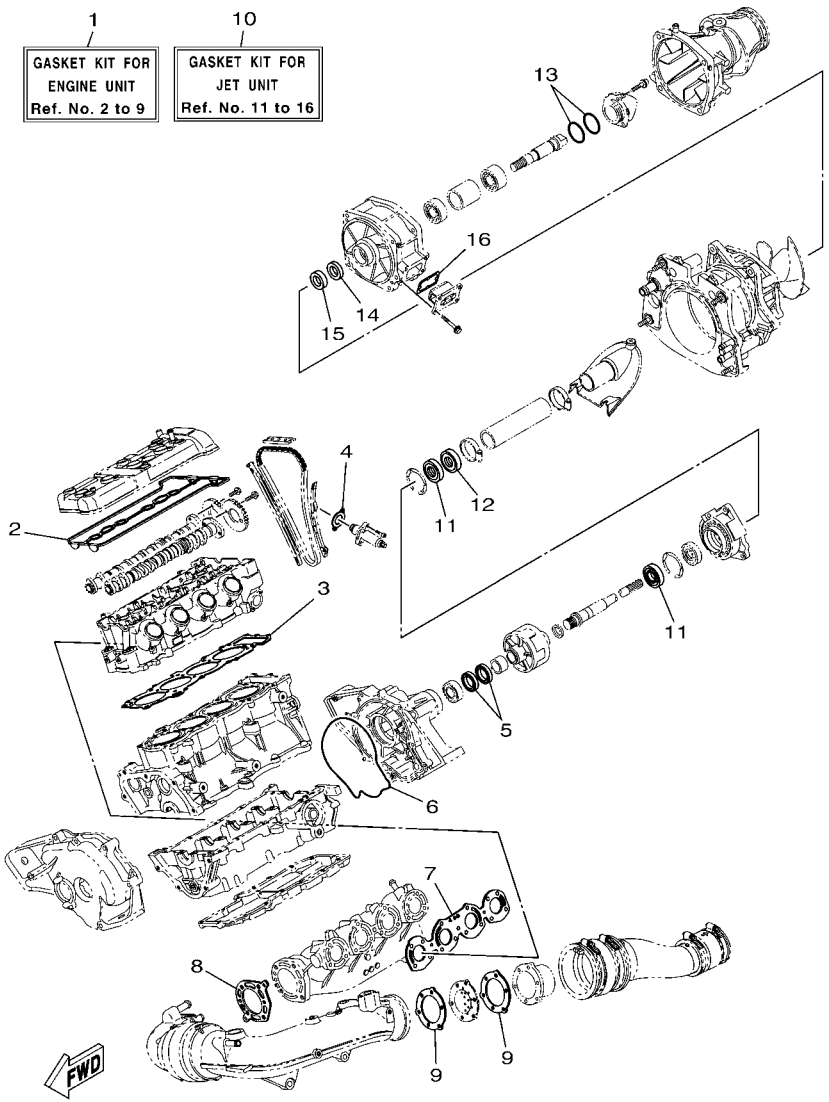

FIG. 35 REPAIR KIT 1

REF. NO.	PART NO.	DESCRIPTION	CAN	EUR	GENE			REMARKS
1	6D3–W0001–01	GASKET KIT FOR ENGINE UNIT	1	1	1			
2	60E–11193–01	.GASKET, HEAD COVER 1	1	1	1			
3	6D3–11181–00	.GASKET, CYLINDER HEAD 1	1	1	1			
4	4FM–12213–00	.GASKET, TENSIONER CASE	1	1	1			
5	93101–35004	.OIL SEAL	2	2	2			
6	6B6–13475–01	.GASKET	1	1	1			
7	6D3–14613–10	.GASKET, EXHAUST PIPE	1	1	1			
8	6D3–14739–10	.GASKET, MUFFLER DAMPER 1	1	1	1			
9	60E–14623–00	.GASKET, EXHAUST PIPE	2	2	2			
10	6EX–W0001–20	GASKET KIT FOR JET UNIT	1	1	1			
11	93101–25M55	.OIL SEAL	2	2	2			
12	93102–25009	.OIL SEAL	1	1	1			
13	93210–464A3	.O-RING	2	2	2			
14	93101–21002	.OIL SEAL	1	1	1			
15	93101–21001	.OIL SEAL	1	1	1			
16	66V–42414–00	.O-RING	1	1	1			

PART NO.	REF. NO.
6D3–11102–00	1 – 2
4KG–1111G–00	1 – 20
6D3–11125–00	7 – 30
6D3–11126–00	7 – 25
3TJ–11133–10	1 – 3
1WG–11133–11	1 – 4
6D3–11164–00	7 – 21
6D3–11165–00	8 – 22
6D3–11166–00	7 – 32
6D3–11167–00	8 – 32
6D3–11181–00	1 – 21
	35 – 3
6EX–11191–00	1 – 17
60E–11193–01	1 – 18
	35 – 2
69J–11301–10	2 – 12
6E5–11325–00	8 – 12
68V–11325–02	2 – 13
67F–11328–00	2 – 14
60E–11372–10	9 – 5
60E–11411–11	3 – 1
6D3–11416–00	3 – 2
6D3–11416–10	3 – 2
6D3–11416–20	3 – 2
6D3–11416–30	3 – 2
6D3–11416–A0	3 – 2
6B6–11478–00	3 – 15
6D3–11603–00	3 – 4
6D3–11631–01–B0	3 – 3
6D3–11633–00	3 – 5
6D3–11650–00	3 – 7
5JW–11654–00	3 – 8
60E–11656–00	3 – 10
60E–11656–10	3 – 10
60E–11656–20	3 – 10
60E–11656–30	3 – 10
4XV–12111–00	4 – 5
4XV–12112–00	4 – 6
4XV–12113–00	4 – 10
4XV–12114–00	4 – 11
1HX–12116–01	4 – 8
1HX–12117–00	4 – 12
1WG–12117–00	4 – 13
1HX–12118–00	4 – 14
1WG–12118–00	4 – 15
4SV–12119–00	4 – 17
4TV–12119–00	4 – 16
5LV–12121–00	4 – 7

PART NO.	REF. NO.
3GM–12126–00	4 – 9
3FV–12153–10	4 – 20
3LN–12153–10	4 – 19
1HX–12168–00	4 – 18
1HX–12168–20	4 – 18
1HX–12168–40	4 – 18
1HX–12168–60	4 – 18
1HX–12168–80	4 – 18
1HX–12168–A0	4 – 18
1HX–12168–F0	4 – 18
1HX–12168–H1	4 – 18
1HX–12168–K1	4 – 18
1HX–12168–M1	4 – 18
1HX–12168–R1	4 – 18
1HX–12168–U1	4 – 18
1HX–12168–W1	4 – 18
1HX–12168–Y1	4 – 18
1HX–12169–11	4 – 18
1HX–12169–31	4 – 18
1HX–12169–50	4 – 18
1HX–12169–70	4 – 18
1HX–12169–90	4 – 18
1HX–12169–E0	4 – 18
1HX–12169–G0	4 – 18
1HX–12169–J0	4 – 18
1HX–12169–L0	4 – 18
1HX–12169–N0	4 – 18
1HX–12169–T0	4 – 18
6D3–12171–11	4 – 1
6D3–12176–00	4 – 3
6D3–12181–00	4 – 2
6D3–12210–00	4 – 23
4FM–12213–00	4 – 24
	35 – 4
5BE–12241–00	4 – 22
6D3–12251–00	4 – 26
4XV–12252–00	4 – 27
6D3–12411–00	11 – 33
6BH–12413–00	11 – 34
60E–12417–10	11 – 32
60E–12435–00	10 – 35
	11 – 39
6BU–1243A–00	10 – 11
	11 – 11
6BU–1243F–10	10 – 37
	11 – 44
60E–12443–00	10 – 8
	11 – 8

PART NO.	REF. NO.
6D3–12446–00	10 – 34
	11 – 36
60E–1244E–00	6 – 20
	6 – 23
	17 – 42
	17 – 57
6BU–1244G–10	9 – 1
6D3–1244G–10	10 – 28
	11 – 28
6D3–1244H–10	10 – 21
	11 – 21
60E–12474–00	1 – 30
6EX–12482–00	1 – 25
60E–12483–10	1 – 29
6EX–12494–00	1 – 28
6B6–12499–00	11 – 42
60E–12537–01	1 – 31
6D3–12577–10	10 – 25
	11 – 25
63M–12580–00	10 – 5
	11 – 5
60E–12581–00	10 – 3
	11 – 3
60E–12584–00	10 – 15
	11 – 15
6D3–12584–00	10 – 20
	11 – 20
6S5–12589–01	10 – 16
	11 – 16
6BU–12880–11	6 – 2
6B6–1310A–01–94	2 – 18
6B6–13151–00–94	8 – 28
60E–13161–00	2 – 20
6D3–13300–10	7 – 2
6B6–13317–00	8 – 5
6B6–13327–02–94	7 – 8
6B6–13360–00	7 – 1
6B6–13411–00	7 – 11
60E–13421–00	8 – 7
5GH–13440–50	2 – 25
6D3–13443–00–94	8 – 24
60E–13446–00	8 – 1
6D3–13462–00–94	8 – 3
6D3–13463–00–94	8 – 14
60E–13473–00	8 – 21
60E–13475–00	8 – 15
6B6–13475–01	7 – 13
	35 – 6

PART NO.	REF. NO.
60E–13476–10	8 – 25
8FP–13556–10	6 – 5
6B6–13563–01	7 – 3
68V–13573–00	6 – 11
6D3–13641–00	6 – 1
6BU–13750–00	6 – 7
60E–13761–20	6 – 3
6D3–13795–01	6 – 9
60E–13907–03	19 – 1
68V–1416A–00	6 – 4
6D3–14294–10	6 – 16
6CS–14305–10	30 – 1
6D3–14411–00	5 – 1
6EX–14414–00	6 – 19
6EX–14414–10	6 – 22
6D3–14419–01	5 – 8
6D3–14421–02	5 – 3
6D3–14437–00	5 – 7
63P–14446–00	6 – 13
60E–14449–00–94	6 – 25
6D3–14451–00	5 – 4
4XV–14452–00	5 – 2
6D3–14457–00	6 – 8
68V–14475–00	6 – 12
6D3–14613–10	9 – 3
	35 – 7
6D3–14615–00	9 – 14
60E–14623–00	9 – 21
	35 – 9
6D3–14625–00	9 – 16
6D3–1469W–10	9 – 23
6D3–14711–10	9 – 4
6D3–14712–00–94	9 – 9
6D3–14721–10	9 – 18
6D3–14739–10	9 – 10
	35 – 8
6BU–14752–00–94	9 – 25
6BU–1475E–00	9 – 26
6BU–1475F–00	9 – 27
60E–14784–00–94	9 – 22
6BU–15100–00	2 – 1
6BU–15362–A0	8 – 20
6D3–15515–00	15 – 1
60E–15517–00	15 – 2
60E–15521–00	15 – 3
4WM–15590–00	15 – 4
6D3–17572–00	3 – 11
6B6–17585–00	3 – 18

PART NO.	REF. NO.
6B6–17586–00	3 – 19
EU0–23814–31	31 – 25
6S5–24300–01	6 – 15
70R–24489–00	27 – 4
70R–24543–00	27 – 3
6EX–2812A–00	17 – 21
66V–42414–00	12 – 10
	35 – 16
67X–44517–10	20 – 1
6D3–44574–00	20 – 2
663–45119–00	13 – 4
61X–45332–03–94	13 – 2
6BU–45511–00	13 – 6
6EX–45514–00	12 – 15
6D3–45593–00–94	13 – 11
6D3–45813–00–94	3 – 12
6D3–4581J–00	13 – 1
6D3–51129–00	2 – 3
68N–5112T–00	23 – 3
66V–51312–01–94	12 – 5
6B6–51315–01–94	12 – 8
6S5–52358–00	14 – 11
F1K–6134M–00	31 – 5
F1K–61355–00	31 – 12
F1B–613C1–00	31 – 8
F2X–613C1–00	31 – 17
F2X–61400–00	31 – 1
F2X–6140B–00	29 – 8
F1K–6142B–00	31 – 13
F2X–61435–00	31 – 3
F1B–61438–00	29 – 2
F1K–6143C–00	31 – 19
F2N–61460–00	29 – 5
EU0–61461–02	31 – 10
F1B–61461–02	29 – 4
F2X–6146H–00	31 – 7
F2N–61481–00	29 – 1
F3J–6150D–00	29 – 14
F3J–6150F–00	29 – 13
F1B–6151S–00	29 – 3
F2X–6152M–00	31 – 4
F1K–6153R–00	31 – 9
F1K–61624–00	23 – 23
F0X–61637–00	23 – 26
EU0–61652–00	10 – 10
	11 – 10
	23 – 8
F0X–61652–00	23 – 27

PART NO.	REF. NO.
EW2–62142–00	27 – 2
F1G–62149–00	27 – 8
F2F–6214A–00	27 – 1
GP7–62159–02	27 – 6
GJ3–6215F–00	19 – 17
F2S–6411H–00	33 – 11
GA7–65772–00	28 – 4
EU0–65901–02	33 – 14
F1B–65986–13	33 – 13
6CS–6725F–00	30 – 3
	30 – 12
F2X–67410–00	31 – 2
F2S–67743–00	27 – 39
F1B–67747–00	27 – 17
EU0–67767–31	27 – 30
EW2–67821–00	28 – 3
F2N–67823–00	22 – 18
F2N–67823–10	21 – 21
	21 – 31
F2X–6820A–00	19 – 19
GU2–6822E–01	19 – 21
60E–682E0–00	19 – 2
F2X–68310–00	30 – 10
FK7–68312–02	30 – 13
FK7–68313–02	30 – 14
F1S–68341–00	31 – 15
EW2–68348–00	30 – 11
F2X–6838B–00	31 – 16
F2X–6838C–00	31 – 18
6D3–81147–00	6 – 14
60E–81315–00	18 – 21
60E–81328–00	15 – 18
6BU–81336–00	17 – 34
6D3–81337–00–94	15 – 13
6S5–81364–10	8 – 34
6D3–81410–02	15 – 7
6D3–81450–00	15 – 6
6BU–81639–00	17 – 33
6D3–81800–00	16 – 1
3AJ–81809–00	16 – 6
60E–81810–00	16 – 10
6D3–81820–00	16 – 9
6M6–81826–00	16 – 4
6M6–81830–00	16 – 2
6M6–81840–10	16 – 8
11H–81844–00	16 – 5
6BU–81845–00	17 – 27
6D3–81845–00	15 – 21

PART NO.	REF. NO.
6EX–81845–00	17 – 47
1FK–81847–00	16 – 3
6M6–81850–00	16 – 7
6CS–81860–00	30 – 2
6BU–81861–00	17 – 40
1B7–81940–00	17 – 63
6EX–81953–00	17 – 48
6EX–8195A–00	17 – 20
6S8–81960–00	17 – 37
6EX–82115–00	17 – 61
6BU–82116–00	19 – 48
6EX–82117–00	17 – 62
67F–82151–00	17 – 17
6EX–82151–00	17 – 19
67F–82151–10	17 – 18
67F–82151–30	17 – 15
67F–82151–40	17 – 16
6EX–82170–00	17 – 14
6EX–82310–00	18 – 6
6A0–82317–00	7 – 22
	17 – 23
	17 – 31
68V–82504–00	18 – 20
60E–82532–00	18 – 22
60E–82556–00	19 – 3
6D3–82560–01	18 – 16
60E–82560–A1	18 – 13
6EX–82588–00	17 – 51
703–82591–00	31 – 6
60E–8259E–00	17 – 26
6EX–8259L–A0	18 – 9
6D3–8273J–01	18 – 23
60E–83627–00	8 – 27
68F–83688–10	6 – 6
682–84385–01	10 – 9
	11 – 9
6D3–85132–00	1 – 23
6AA–85542–00	8 – 19
6BU–85542–00	8 – 9
61A–85790–00	18 – 11
60E–85896–01	18 – 18
6EX–8591A–A0	17 – 28
6EX–8591A–B0	17 – 28
6B6–86261–00	18 – 29
6B6–86261–10	18 – 29
6B6–86265–00	18 – 30
6B6–86265–10	18 – 30
67X–E2590–10	10 – 43

PART NO.	REF. NO.
67X–E2590–10	11 – 50
6EX–G5538–00	12 – 13
6CS–G5831–00	12 – 2
6EX–G6882–00	12 – 9
6EX–R1313–00	12 – 32
6ET–R1314–01	14 – 4
6EX–R1318–00	12 – 23
6D3–R1319–00	12 – 21
6D3–R1321–02	12 – 22
6EX–R1326–00	12 – 18
6EX–R1333–00	12 – 1
6ET–R1341–00	14 – 1
6EX–R1341–00	12 – 31
6ET–R1342–00	14 – 2
60E–R1381–01	13 – 15
F2C–U1314–00	23 – 48
F2X–U135C–00	22 – 11
F2S–U13C1–00	21 – 12
	22 – 5
F2X–U13C1–00	22 – 34
F2X–U142D–00	32 – 3
	32 – 3
F2X–U142D–10	32 – 3
F2N–U142L–00	19 – 10
	21 – 15
	21 – 25
	24 – 5
	24 – 6
	24 – 15
	24 – 18
	28 – 15
F2X–U143D–00	32 – 1
	32 – 1
F2X–U143D–10	32 – 1
F2X–U143E–00	32 – 2
	32 – 2
F2X–U143E–10	32 – 2
EU0–U1461–03	14 – 14
F1K–U1467–01	31 – 20
F1K–U1468–03	31 – 23
F2S–U1516–00	30 – 8
F2C–U151S–00	19 – 30
F2X–U1552–00	30 – 4
F2S–U155D–02	30 – 5
F2X–U156E–00	32 – 4
F2N–U1628–02	23 – 16
	26 – 35
F1B–U1653–02	23 – 22

PART NO.	REF. NO.
F2X–U1708–00	21 – 34
F2X–U2127–00	25 – 1
F2N–U213G–01	25 – 5
F2X–U2157–00	25 – 2
F1S–U2280–02	23 – 36
F1S–U2285–00	23 – 37
F2X–U2511–00	24 – 1
	24 – 1
F2X–U2511–10	24 – 1
F2X–U2512–00	24 – 7
	24 – 7
F2X–U2512–10	24 – 7
F2X–U2519–10	24 – 8
	24 – 8
F2X–U2519–20	24 – 8
F2X–U2519–30	24 – 8
F2X–U251D–00	24 – 13
	24 – 13
F2X–U251D–10	24 – 13
F2X–U251E–00	24 – 16
	24 – 16
F2X–U251E–10	24 – 16
F2N–U2663–01	22 – 6
F1W–U2664–01	26 – 3
F1K–U266B–00	22 – 30
	22 – 33
F2N–U266C–01	22 – 20
F2C–U266D–01	26 – 8
F2C–U266E–00	26 – 34
F1W–U269B–00	23 – 7
F2X–U271B–00	26 – 24
	26 – 24
F2X–U271B–10	26 – 24
F2C–U2733–00	28 – 18
F2X–U273B–00	12 – 39
F2X–U278A–00	23 – 45
F2S–U278F–00	23 – 49
F2S–U278H–00	23 – 50
F1K–U283B–02	22 – 14
F2X–U2875–00	21 – 36
F2X–U351H–00	24 – 22
	24 – 22
F2X–U351H–20	24 – 22
F2X–U351H–30	24 – 22
F2X–U351J–00	24 – 23
	24 – 23
F2X–U351J–20	24 – 23
F2X–U351J–30	24 – 23

PART NO.	REF. NO.
F2X–U351K–00	24 – 24
	24 – 24
F2X–U351K–20	24 – 24
F2X–U351K–30	24 – 24
F2X–U351M–00	24 – 25
	24 – 25
F2X–U351M–20	24 – 25
F2X–U351M–30	24 – 25
F2X–U351N–00	24 – 26
	24 – 26
F2X–U351N–20	24 – 26
F2X–U351N–30	24 – 26
F2X–U3581–01	24 – 21
	24 – 21
F2X–U3581–20	24 – 21
F2X–U3581–30	24 – 21
F2X–U371A–00	26 – 1
F2X–U371A–10	26 – 1
F2X–U371A–30	26 – 1
F2X–U371B–00	26 – 2
F2X–U371B–10	26 – 2
F2X–U371B–30	26 – 2
F2X–U372A–00	26 – 6
F2X–U372A–10	26 – 6
F2X–U372A–30	26 – 6
F2X–U372B–00	26 – 7
F2X–U372B–10	26 – 7
F2X–U372B–30	26 – 7
F2S–U375E–00	26 – 16
F1W–U3768–01	22 – 4
	22 – 29
	22 – 32
F1K–U3774–00	26 – 25
GH1–U3774–00	26 – 12
F2X–U377B–00–P0	21 – 13
F2X–U377B–00–P2	21 – 13
F2X–U377B–00–P3	21 – 13
F2X–U377B–00–P4	21 – 13
F2X–U377C–00–P0	21 – 23
F2X–U377C–00–P2	21 – 23
F2X–U377C–00–P3	21 – 23
F2X–U377C–00–P4	21 – 23
F2X–U377F–00	21 – 19
F2X–U377G–00	21 – 29
F2C–U377H–00	23 – 47
F2X–U377H–00	21 – 22
F2X–U377J–00	21 – 32
F2X–U378C–00	26 – 21

PART NO.	REF. NO.
F2C–U3850–00	26 – 4
F1B–U3850–02	26 – 9
F2P–U4114–00	33 – 10
F1X–U4114–60	33 – 10
F2P–U4114–A0	33 – 10
F2N–U411C–00	33 – 9
F2P–U411C–00	33 – 9
F1B–U411C–02	33 – 10
F1X–U411C–60	33 – 9
F2P–U411C–A0	33 – 9
F1W–U4121–00	33 – 12
F2S–U413P–00	34 – 12
F1X–U413P–02	34 – 12
	34 – 12
F1B–U415B–11	34 – 5
F1S–U415B–11	34 – 5
	34 – 5
GJ3–U416H–01	34 – 11
GP8–U416H–01	34 – 11
	34 – 11
F2X–U417B–00	33 – 1
F2X–U417B–10	33 – 1
F2X–U417B–20	33 – 1
F2X–U417B–30	33 – 1
F2X–U417C–00	33 – 2
F2X–U417C–10	33 – 2
F2X–U417C–20	33 – 2
F2X–U417C–30	33 – 2
F2X–U417D–00	33 – 3
F2X–U417D–10	33 – 3
F2X–U417D–20	33 – 3
F2X–U417D–30	33 – 3
F2X–U417E–00	33 – 4
F2X–U417E–10	33 – 4
F2X–U417E–20	33 – 4
F2X–U417E–30	33 – 4
F2X–U417F–00	33 – 5
F2X–U417F–10	33 – 5
F2X–U417F–20	33 – 5
F2X–U417F–30	33 – 5
F2X–U417G–00	33 – 6
F2X–U417G–10	33 – 6
F2X–U417G–20	33 – 6
F2X–U417G–30	33 – 6
F2X–U417H–00	33 – 7
F2X–U417H–10	33 – 7
F2X–U417H–20	33 – 7
F2X–U417H–30	33 – 7

PART NO.	REF. NO.
F2X–U417J–00	33 – 8
F2X–U417J–10	33 – 8
F2X–U417J–20	33 – 8
F2X–U417J–30	33 – 8
F1G–U418F–00	34 – 8
GJ3–U419E–00	34 – 10
F1S–U419E–01	34 – 10
	34 – 10
F2X–U41B1–10	34 – 1
F2S–U41B1–20	34 – 2
F1B–U41B1–21	34 – 2
	34 – 2
F2S–U41B1–30	34 – 3
F1B–U41B1–31	34 – 3
	34 – 3
F1B–U41B2–01	34 – 4
	34 – 4
F0M–U41B2–11	34 – 4
F0V–U41DB–12	34 – 6
F2S–U41E1–10	34 – 9
F1S–U41E1–11	34 – 9
	34 – 9
F1B–U41F5–11	34 – 7
F1B–U41F5–21	34 – 7
	34 – 7
F2C–U4256–00	19 – 43
F2N–U4261–00	28 – 9
F1K–U471E–03	22 – 13
F2X–U475B–00	22 – 19
F2S–U475F–00	22 – 26
F1W–U491K–00	24 – 2
	24 – 14
	24 – 17
GP7–U4953–10	23 – 19
	23 – 20
	23 – 21
	26 – 36
F2X–U515A–00	22 – 8
F2C–U515D–00	22 – 3
F2X–U516P–00	21 – 33
F2X–U5175–00	21 – 6
	21 – 17
	21 – 27
F2X–U517B–00–P0	22 – 1
F2X–U517B–00–P2	22 – 1
F2X–U517B–00–P3	22 – 1
F2X–U517B–00–P4	22 – 1
F2X–U517C–01	22 – 7

PART NO.	REF. NO.
F1K–U517D–05	22 – 10
F2X–U517E–00	21 – 2
	21 – 20
	21 – 30
F2X–U517F–00	21 – 1
F1K–U517R–00	22 – 12
F1K–U518E–04	22 – 9
F2X–U519D–00	21 – 35
F2X–U519G–00	22 – 2
F2X–U5554–00	21 – 4
F2X–U555B–00	21 – 10
F1K–U5772–04	22 – 35
	27 – 37
F2X–U590D–10	22 – 28
	22 – 28
F2X–U590D–30	22 – 28
F2X–U590D–50	22 – 28
F2X–U590E–10	22 – 31
	22 – 31
F2X–U590E–30	22 – 31
F2X–U590E–50	22 – 31
F2X–U591A–00	26 – 31
F2C–U591C–00	26 – 32
F2C–U591D–01	26 – 33
F2X–U5983–00	22 – 38
F2N–U721B–00	20 – 11
F1S–U725E–01	12 – 36
F2X–U72C0–00	12 – 35
6CN–U72M2–00	12 – 24
F2S–U732B–00	20 – 9
F2N–U732B–10	20 – 12
EU0–U7354–00–01	20 – 8
EU0–U7354–00–03	20 – 8
EU0–U7354–00–05	20 – 8
EU0–U7354–00–10	20 – 8
EU0–U7354–00–20	20 – 8
F1B–U751G–00	28 – 13
F2C–U753B–01	28 – 16
F2X–U7550–00	28 – 1
F2N–U7555–01	28 – 6
F2C–U7557–01	12 – 48
F2C–U7564–00	28 – 17
GJ1–U7578–11	19 – 27
	19 – 28
GJ1–U7578–21	19 – 26
F1S–U757B–01	28 – 14
F2N–U758D–00	28 – 11
F2S–U759B–00	27 – 40

PART NO.	REF. NO.
F2S–U759B–00	27 – 41
F1K–U759C–00	22 – 37
	27 – 44
F1W–U759C–01	27 – 42
	27 – 43
F1B–U761D–02	23 – 10
F2S–U7711–02	27 – 15
F1W–U771H–00	23 – 46
6EX–U773D–00	23 – 5
6EX–U773E–00	23 – 2
F1B–U7773–00	27 – 16
F2X–U7831–00	27 – 19
GP7–U7832–01	27 – 21
F2X–U7833–00	27 – 20
GP7–U7834–10	27 – 25
GP7–U7835–00	27 – 22
GP7–U783F–00	27 – 26
F2X–U7844–01	27 – 27
F0D–U7856–10	27 – 36
F1K–U785G–00	27 – 34
F0D–U785G–10	19 – 15
GP7–U785H–00	27 – 31
F2N–U815D–01	17 – 6
F2N–U8169–00	23 – 34
	23 – 35
F2S–U8211–00	19 – 8
EU0–U8217–H2	19 – 4
EU0–U821D–00	19 – 14
F1K–U8221–00	19 – 13
F1S–U8221–00	19 – 11
	27 – 45
	28 – 2
	28 – 10
EU0–U8221–30	19 – 12
F3J–U822E–00	19 – 22
F2S–U8244–00	26 – 17
F2X–U8262–00	21 – 11
F1W–U826C–00	18 – 1
F1K–U826C–03	23 – 43
F3J–U8285–00	29 – 9
F1X–U828E–01	21 – 8
F1S–U828H–01	17 – 2
F2P–U828K–00	22 – 40
F1W–U828M–00	17 – 3
	19 – 32
	19 – 37
	19 – 40
	19 – 45

PART NO.	REF. NO.
F1W–U828M–00	22 – 22
	25 – 6
	27 – 9
	27 – 12
F3J–U8368–01	19 – 35
F1W–U8376–00	18 – 3
F2X–U8571–00	12 – 46
	12 – 47
F2N–U8572–00	5 – 14
	5 – 15
F2X–U8572–00	12 – 41
	12 – 42
F2S–U8577–00	12 – 43
F2S–U8592–00	19 – 5
F2S–U8593–00	19 – 6
F2N–U883B–00	13 – 20
F2N–U883E–00	13 – 17
F1S–U883N–01	23 – 29
F1S–U883P–01	23 – 30
F1X–U883T–01	23 – 31
F2S–U890L–04	26 – 11
F2X–U89A8–00	24 – 27
F2X–U89A8–10	24 – 27
	24 – 27
F2X–U89A8–20	24 – 27
F2X–U89A9–00	24 – 28
F2X–U89A9–10	24 – 28
	24 – 28
F2X–U89A9–20	24 – 28
F2X–U89AA–00	24 – 29
F2X–U89AA–10	24 – 29
	24 – 29
F2X–U89AA–20	24 – 29
F2X–U89AB–00	24 – 30
F2X–U89AB–10	24 – 30
	24 – 30
F2X–U89AB–20	24 – 30
F2X–U89AC–00	24 – 31
F2X–U89AC–10	24 – 31
	24 – 31
F2X–U89AC–20	24 – 31
F2X–U89AD–00	24 – 32
F2X–U89AD–10	24 – 32
	24 – 32
F2X–U89AD–20	24 – 32
F1S–U8K31–02	19 – 29
6D3–W0001–01	35 – 1
6EX–W0001–20	35 – 10

PART NO.	REF. NO.
6EX–W009A–00–94	1 – 1
6BU–W009B–00–94	2 – 4
90105–06026	1 – 9
90105–06035	8 – 17
	10 – 36
	11 – 35
	11 – 40
90105–06036	8 – 16
90105–06054	11 – 41
90105–06790	9 – 24
90105–06826	22 – 15
90105–06M07	2 – 15
	8 – 26
90105–06M17	2 – 11
90105–07004	4 – 4
90105–08860	23 – 32
	23 – 33
90105–093A5	2 – 6
90105–105A6	15 – 10
90109–06051	2 – 9
90109–066F0	1 – 19
90109–06832	13 – 18
90109–06M92	20 – 3
90109–08041	12 – 49
90110–06040	23 – 28
	29 – 10
90110–06382	30 – 6
90110–06822	12 – 20
90110–08041	7 – 6
90110–08212	15 – 5
90111–06803	21 – 14
	21 – 24
	24 – 3
	24 – 4
90116–10016	8 – 30
90116–10058	2 – 5
90119–05803	19 – 20
90119–06048	18 – 25
90119–06832	19 – 9
90119–06880	21 – 3
90119–06882	21 – 5
	21 – 16
	21 – 26
90119–06889	12 – 11
90119–06891	13 – 13
	14 – 3
	20 – 14
90119–06893	12 – 6

PART NO.	REF. NO.
90119–069UH	31 – 24
90119–069UP	26 – 5
	26 – 10
90119–069UX	14 – 7
90119–06M65	7 – 24
90119–08031	9 – 13
90119–08034	7 – 15
90119–08036	9 – 7
	9 – 12
90119–08043	7 – 16
90119–08045	7 – 14
90119–08050	6 – 26
90119–08074	6 – 27
90119–08075	9 – 8
90119–08085	7 – 7
90119–08823	12 – 40
	12 – 44
	12 – 45
	20 – 6
	20 – 7
90119–08827	31 – 26
90119–08828	26 – 18
	26 – 28
90119–08836	31 – 22
90119–08840	12 – 33
	14 – 5
90119–08851	29 – 11
90119–08859	20 – 4
	20 – 5
90119–08861	23 – 51
	23 – 52
90119–089U7	12 – 52
	17 – 1
90119–089UL	13 – 16
90119–08M22	5 – 11
90119–10013	9 – 20
90119–10016	15 – 14
90119–10017	9 – 19
90119–10020	8 – 4
90119–10804	26 – 26
90119–10806	12 – 30
90119–10810	12 – 4
90119–10M02	8 – 29
90119–10M19	15 – 15
90149–05903	32 – 6
90150–05807	19 – 31
90154–06017	32 – 5
90159–05013	5 – 5

PART NO.	REF. NO.
90159–05014	5 – 6
90169–049U1	27 – 23
90176–06047	17 – 25
	17 – 30
	17 – 36
	17 – 39
	17 – 45
	17 – 50
	17 – 54
	17 – 56
	17 – 59
90176–10001	1 – 16
	8 – 31
90179–08327	3 – 9
90179–10006	1 – 14
90179–10414	1 – 15
90201–06801	14 – 9
	14 – 12
90201–068G0	30 – 7
90201–06906	29 – 6
90201–096J9	2 – 7
90201–099U3	17 – 7
	26 – 22
90201–10013	1 – 12
90201–10019	1 – 13
90201–103U7	15 – 11
90201–10801	12 – 37
90201–109U6	26 – 13
90201–24800	13 – 12
90209–25008	3 – 20
90267–329UR	27 – 24
90267–409U5	19 – 36
90267–48802	17 – 4
	21 – 7
	21 – 18
	21 – 28
	22 – 39
90267–48803	19 – 46
	22 – 23
90267–48806	25 – 3
	25 – 4
90267–48825	24 – 19
	24 – 20
90267–489U1	10 – 44
	11 – 51
	18 – 2
	18 – 4
	19 – 7

PART NO.	REF. NO.
90267–489U1	22 – 36
	23 – 44
	27 – 38
	28 – 5
90267–489U2	20 – 10
	20 – 13
	27 – 5
	31 – 21
90267–489U6	19 – 33
	19 – 38
	19 – 41
	25 – 7
	27 – 7
	27 – 10
	27 – 13
90267–489U8	23 – 11
	24 – 9
	24 – 10
90269–08801	22 – 25
	22 – 27
90280–03047	15 – 12
90340–27001	1 – 7
90387–06083	11 – 43
90387–06119	7 – 23
	17 – 24
	17 – 32
90387–06289	13 – 14
90387–06M05	8 – 10
	8 – 18
	8 – 35
90387–06M30	14 – 8
90387–08M06	12 – 34
90387–08M30	14 – 6
90387–08M37	5 – 13
90401–20007	2 – 26
90430–06014	1 – 11
90430–06M03	2 – 16
90430–12002	12 – 51
90445–14807	12 – 26
90445–18M03	10 – 23
	11 – 23
90445–20800	23 – 4
90445–20804	23 – 1
90445–21805	10 – 1
	11 – 1
90445–22007	10 – 31
90445–25006	11 – 37
90445–26004	11 – 30

PART NO.	REF. NO.
90446–14M23	18 – 15
90446–20MF5	12 – 27
90447–19801	10 – 7
	11 – 7
90447–22001	10 – 17
	11 – 17
90447–22003	10 – 12
	11 – 12
90447–22004	10 – 2
	11 – 2
90447–22005	10 – 38
	11 – 45
90447–25002	10 – 32
90447–28010	11 – 38
90450–17M17	6 – 17
	6 – 18
90450–57006	6 – 10
90450–90001	9 – 17
90450–94001	9 – 29
	9 – 31
90450–99004	9 – 28
	9 – 30
90450–99005	9 – 15
90450–99801	28 – 12
90450–99804	28 – 8
90464–09M47	17 – 52
90464–12089	5 – 10
90464–21001	7 – 28
	7 – 29
	7 – 34
90464–31001	10 – 41
	11 – 48
	17 – 41
90464–32801	17 – 5
	19 – 23
	19 – 24
	19 – 25
	19 – 34
	19 – 39
	19 – 47
	22 – 24
	27 – 11
	27 – 14
90464–35132	10 – 33
	10 – 42
	11 – 49
	18 – 5
90464–38800	5 – 17

PART NO.	REF. NO.
90464–40825	5 – 18
90464–99804	25 – 8
90465–11829	12 – 28
	19 – 18
	23 – 12
	27 – 32
	27 – 33
	27 – 35
90465–13152	18 – 27
90465–13M18	17 – 46
	17 – 60
	18 – 26
	18 – 28
90465–13M24	17 – 43
	18 – 10
90465–13M39	8 – 37
90467–089U1	19 – 16
90467–110A1	7 – 31
90467–150A5	10 – 6
	11 – 6
90467–160A0	9 – 2
	10 – 22
	10 – 24
	10 – 29
	11 – 22
	11 – 24
	11 – 29
90467–170A4	7 – 26
	7 – 27
	7 – 33
	8 – 33
	10 – 26
	11 – 26
90467–17802	28 – 19
90467–18804	23 – 6
90467–200A0	23 – 14
90467–200A3	10 – 4
	10 – 13
	10 – 14
	10 – 18
	10 – 19
	10 – 27
	10 – 39
	10 – 40
	11 – 4
	11 – 13
	11 – 14
	11 – 18

PART NO.	REF. NO.
90467–200A3	11 – 19
	11 – 27
	11 – 46
	11 – 47
90467–210A0	10 – 30
	23 – 15
90467–21800	23 – 13
90467–240A0	11 – 31
90467–26800	23 – 15
90468–12069	3 – 6
90480–19800	21 – 9
90480–22M15	5 – 9
	5 – 12
90601–118UF	12 – 25
	23 – 9
90601–155U4	13 – 19
	27 – 28
	27 – 29
90601–175UR	5 – 16
90601–179U8	28 – 7
90601–200U2	19 – 42
	19 – 44
90605–502U1	22 – 21
91317–05010	15 – 20
91317–05014	8 – 6
91317–05016	8 – 23
91317–06014	8 – 8
	15 – 19
91317–06016	1 – 27
	1 – 33
	7 – 12
91317–06035	15 – 8
91380–04030	30 – 9
91380–06016	18 – 19
91380–06020	8 – 36
91380–06025	4 – 25
91808–16023	1 – 8
92014–06012	6 – 21
	6 – 24
	17 – 44
	17 – 58
92990–06100	16 – 12
92990–10600	18 – 12
92990–12200	12 – 50
	23 – 25
92995–06100	17 – 65
92995–06600	17 – 66
9299R–05200	23 – 39

PART NO.	REF. NO.
9299R–05200	23 – 40
	24 – 11
	24 – 12
9299R–06200	22 – 17
9299R–08200	17 – 11
	17 – 12
	17 – 13
	26 – 20
	26 – 29
9299R–10200	26 – 14
	26 – 27
93101–21001	12 – 16
	35 – 15
93101–21002	12 – 17
	35 – 14
93101–25M55	13 – 7
	35 – 11
93101–35004	3 – 13
	35 – 5
93102–25009	13 – 10
	35 – 12
93210–06667	2 – 21
93210–08001	2 – 24
93210–18322	8 – 2
93210–18417	1 – 26
	1 – 32
93210–464A3	12 – 19
	35 – 13
93210–60ME8	18 – 24
93212–04001	15 – 17
93306–07801	3 – 14
93306–205A3	13 – 9
93306–205U0	12 – 14
93306–27211	12 – 12
93306–30441	7 – 9
93306–30610	3 – 16
93430–47M04	13 – 8
93440–07149	1 – 5
93440–10153	1 – 6
93440–28062	3 – 21
93603–12221	7 – 4
93606–12019	9 – 11
	12 – 7
	12 – 29
	13 – 5
93606–25M00	7 – 20
93607–44002	4 – 28
93608–16M16	7 – 19

PART NO.	REF. NO.
93608–16M16	9 – 6
	15 – 16
93700–06M03	13 – 3
94591–49130	4 – 21
94702–00409	18 – 8
95023–06012	1 – 10
95027–06010	2 – 22
95380–06700	16 – 13
9538R–06600	14 – 10
	14 – 13
9538R–06700	29 – 7
95720–06300	31 – 11
95720–08300	31 – 14
9572R–05300	23 – 41
	23 – 42
9572R–06300	22 – 16
	27 – 18
9572R–08300	17 – 8
	17 – 9
	17 – 10
	23 – 17
	23 – 18
	26 – 19
	26 – 23
	26 – 30
	26 – 37
	29 – 12
9572R–10300	12 – 38
	26 – 15
95814–06012	17 – 49
	17 – 53
	17 – 55
95814–06020	17 – 35
	17 – 38
95814–06025	17 – 22
	17 – 29
95814–06070	2 – 10
95880–06016	18 – 7
97095–06012	17 – 64
97513–05514	15 – 9
97513–06520	2 – 19
97513–06525	7 – 5
97513–06535	7 – 18
97513–06555	1 – 22
	7 – 17
97513–08520	1 – 24
97513–08530	16 – 11
97595–06416	18 – 14

PART NO.	REF. NO.
97595–06416	18 – 17
97595–06520	8 – 11
97595–08540	2 – 17
9788R–05025	23 – 38
98780–04015	8 – 13
99009–52500	7 – 10
99009–72500	3 – 17
99530–08012	2 – 23
99530–10014	2 – 2
	2 – 8
99590–14016	12 – 3
99780–12600	23 – 24