YAMAHA

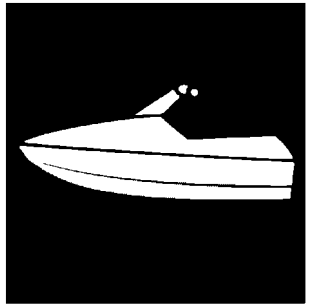

PARTS CATALOGUE

WaveRunner FX HO

FB1800-S (F2TP /6CRL/6CR3)

FB1800-S (F2TR /6CRM/6CR3)

YAMAHA
GENUINE
Parts & Accessories

1SF2T-100EA

( )

FB1800-S
PARTS CATALOGUE
©2016 by Yamaha Motor Co., Ltd.
1st edition, August 2016
All rights reserved.
Any reprinting or unauthorized use
without the written permission of
Yamaha Motor Co., Ltd.
is expressly prohibited.
Printed in Japan.

FOREWORD

This Parts Catalogue is related to the parts for the model(s) on the cover page. When you are ordering replacement parts, please refer to this Parts Catalogue and quote both part numbers and part names correctly.

1. Modifications or additions which have been made after the issue of the Parts Catalogue will be announced in the Parts News.
   It is advisable that you make the necessary corrections to the Parts Catalogue according to the Parts News.

2. Abbreviations
   The following abbreviations are used in this Parts Catalogue.

   "UR" Use specified parts number.

   "UN" Use as many as needed.

   "AP" Alternate Parts

   "LM" Locally Made (Parts need to be ordered locally)

   "F#" Frame No. (Applicable machine No.)

   "O/S" Over Size

3. The number of components for assembly
   - Parts, which are to be supplied in an assembly, are listed with a dot (.) in front of the part name as shown below.
   - The numeral appearing to the right of each component part indicates the quantity of parts for each assembly unit.

PART NO.	DESCRIPTION	Q'TY	REMARKS
2F5–83310–60	FRONT FLASHER LIGHT ASSY	2	
115–83311–60	.BULB (6V–18W)	1	

4. Applicable colours of graphics are represented in the "REMARKS" as shown below.

PART NO.	DESCRIPTION	Q'TY	REMARKS
2N4–24110–00–X5	FUEL TANK COMP.	2	MXR
3J1–24240–10	.GRAPHIC, FUEL TANK	1	FOR MXR

5. Note that the illustrations for reference in finding parts numbers are not to be used for assembling. When assembling, please use the applicable service manual.

6. The asterisk (*) before a reference number indicates modified items after the first edition.

7. Applicable Serial No.

Engine Serial No.

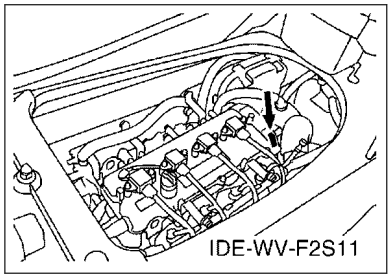

Primary Identification No.

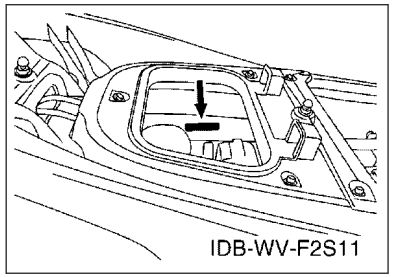

8. Applicable Colour Code (The (*) mark shows Model colour.)

Abbreviation	Colour Name	Colour Code
PURW(*)	PURE WHITE	0240

9. Quantity Column Information

Column No.	Name Of Q'ty Column	Destination
1	F2TP	CANADA
2	F2TR	EUROPE

10. Applicable Starting Serial No.

Engine Serial No.

Serial No.	Name Of Q'ty Column	Model Code

Primary Identification No.

Serial No.	Name Of Q'ty Column	Model Code
F2T-0819867	F2TP	F2TP
F2T-0819881	F2TR	F2TR

CONTENTS

CYLINDER 1....1
CYLINDER 2....2
CRANKCASE....3
CRANKSHAFT & PISTON....5
VALVE....6
INTAKE 1....8
INTAKE 2....10
OIL PUMP....11
OIL PAN....12
OIL COOLER....13
BREATHER OIL....14
EXHAUST 1....15
EXHAUST 2....16
JET UNIT 1....18
JET UNIT 2....20
JET UNIT 3....21
JET UNIT 4....22
GENERATOR....24
STARTING MOTOR....25
ELECTRICAL 1....26
ELECTRICAL 2....28
ELECTRICAL 3....30
ENGINE MOUNT....32
ENGINE HATCH 1....33
ENGINE HATCH 2....35
HULL & DECK....37
HULL & DECK 2....39
GUNWALE & MAT....40
VENTILATION....41
SEAT & UNDER LOCKER....42
SEAT & UNDER LOCKER 2....43
FUEL TANK....45
BILGE PUMP....47
EXHAUST 3....48
CONTROL CABLE....49
STEERING 1....50
STEERING 2....51
STEERING 3....53
GRAPHICS....54
IMPORTANT LABELS....55
REPAIR KIT 1....56

INDEX

NUMERICAL INDEX....58

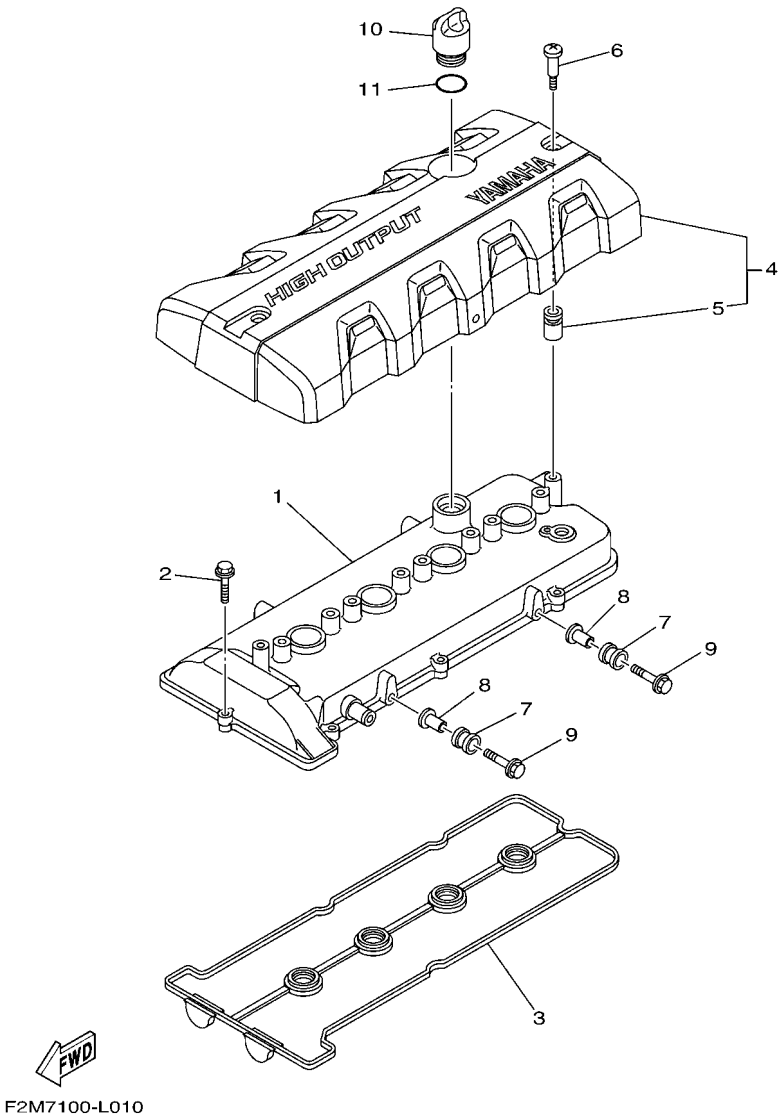

FIG. 1 CYLINDER 1

REF. NO.	PART NO.	DESCRIPTION	F2TP	F2TR				REMARKS
1	6BH–11191–20	COVER, CYLINDER HEAD 1	1	1				
2	90105–06028	BOLT, FLANGE	8	8				
3	6BH–11193–00	GASKET, HEAD COVER 1	1	1				
4	6BH–E110M–00	COVER ASSY 1	1	1				
5	6S5–E1328–00	.GROMMET, ANODE	2	2				
6	6S5–E118E–00	BOLT, COVER MOUNTING	2	2				
7	61N–82317–00	DAMPER, IGNITION COIL	2	2				
8	90387–06119	COLLAR	2	2				
9	95824–06025	BOLT, FLANGE	2	2				
10	6S5–15363–00	PLUG, OIL	1	1				
11	93210–24M79	O-RING	1	1				

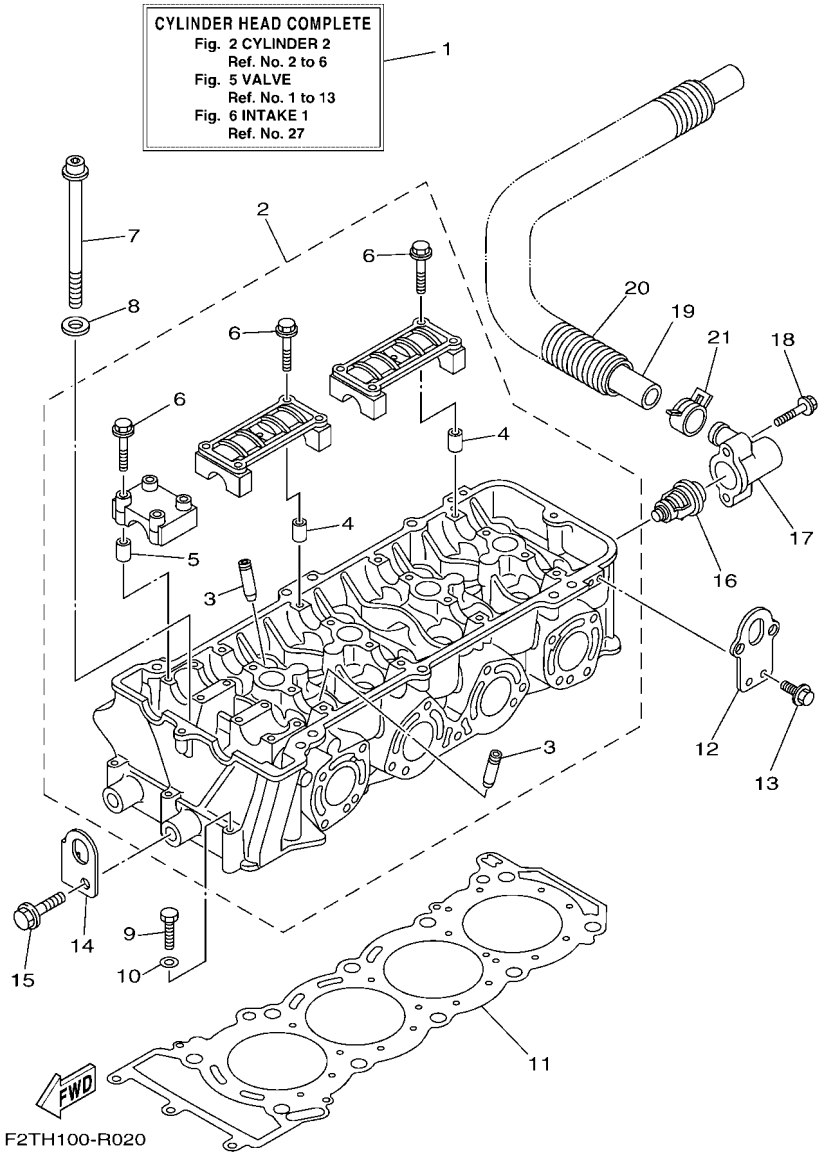

FIG. 2 CYLINDER 2

REF. NO.	PART NO.	DESCRIPTION	F2TP	F2TR				REMARKS
1	6BH–W009A–03–94	CYLINDER HEAD COMPLETE	1	1				
2	6BH–11102–11	CYLINDER HEAD ASSY	1	1				
3	6S5–11133–10	.GUIDE, VALVE 1	16	16				
4	91809–16002	.PIN, DOWEL	8	8				
5	91809–16002	.PIN, DOWEL	4	4				
6	90105–07009	.BOLT, FLANGE	24	24				
7	6S5–12228–01	BOLT	10	10				
8	90201–12039	WASHER, PLATE	10	10				
9	97013–06055	BOLT	3	3				
10	92903–06600	WASHER, PLATE	3	3				
11	6BH–11181–00	GASKET, CYLINDER HEAD 1	1	1				
12	6BH–1111E–00	HANGER, ENGINE 2	2	2				
13	90119–06078	BOLT, WITH WASHER	4	4				
14	6BH–11119–00	HANGER, ENGINE	1	1				
15	97513–10525	BOLT, WITH WASHER	1	1				
16	6D3–12411–00	THERMOSTAT	1	1				
17	6BH–12413–00	COVER, THERMOSTAT	1	1				
18	90105–06035	BOLT, FLANGE	2	2				
19	6S5–12578–00	HOSE 3	1	1				
20	90447–28008	TUBE (L850)	1	1				
21	90467–240A0	CLIP	1	1				

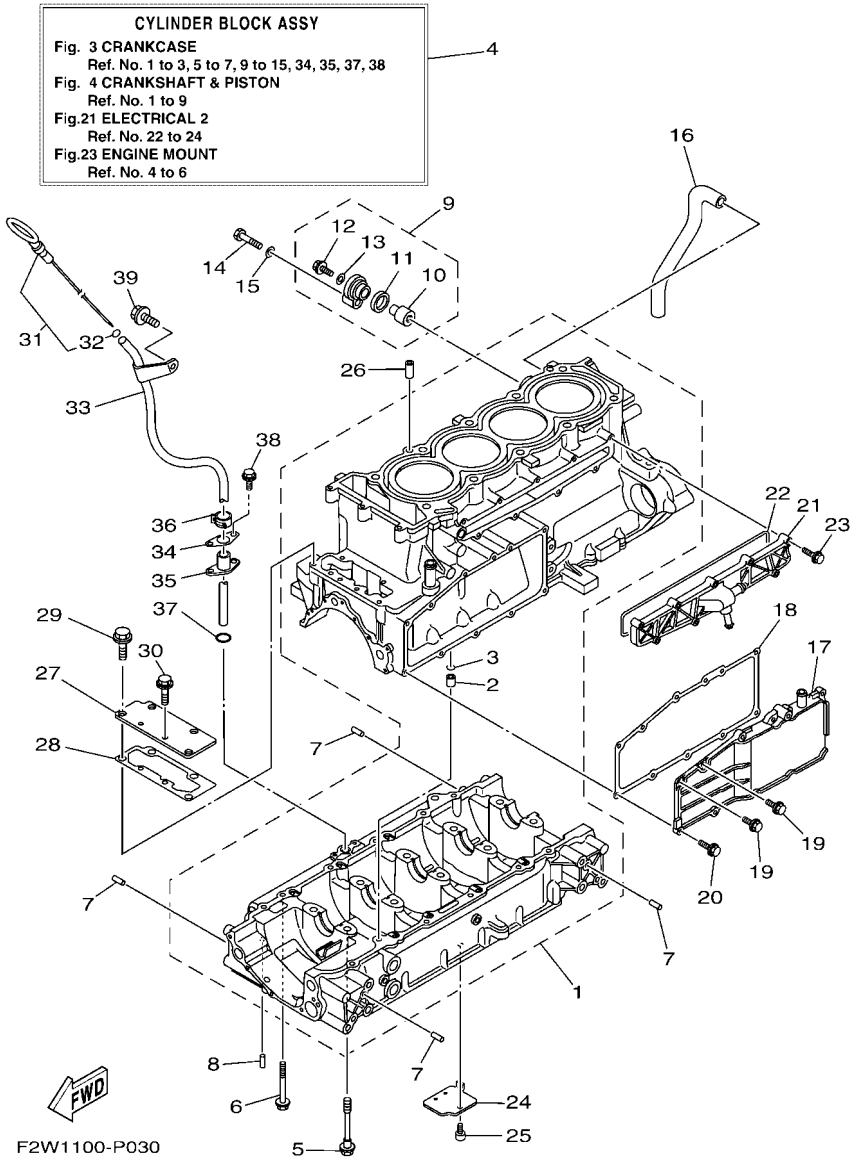

FIG. 3 CRANKCASE

REF. NO.	PART NO.	DESCRIPTION	F2TP	F2TR				REMARKS
1	6CR–15100–11	CRANKCASE ASSY	1	1				
2	99530–10114	.PIN, DOWEL	1	1				
3	93210–11453	.O-RING	1	1				
4	6CR–W009B–11–94	CYLINDER BLOCK ASSY	1	1				
5	90105–10071	BOLT, FLANGE	10	10				
6	95814–06070	BOLT, FLANGE	12	12				
7	93606–12019	PIN, DOWEL	8	8				
8	93604–10M03	PIN, DOWEL	2	2				
9	69J–11301–10	ANODE COVER ASSY	1	1				
10	68V–11325–02	.ANODE	1	1				
11	67F–11328–00	.GROMMET, ANODE	1	1				
12	90105–06M07	.BOLT, FLANGE	1	1				
13	90430–06M03	.GASKET	1	1				
14	97095–08040	BOLT	1	1				
15	92995–08600	WASHER	1	1				
16	6S5–11377–00	HOSE	1	1				
17	6S5–1131M–10–8P	COVER	1	1				
18	6BH–13557–00	GASKET	1	1				
19	95024–06014	BOLT, FLG.(SMALL HEAD)	2	2				
20	95024–06020	BOLT, FLG.(SMALL HEAD)	9	9				
21	6CS–12469–A0	JOINT 1	1	1				
22	6CS–12517–00	GASKET, WATER INLET	1	1				
23	95814–06035	BOLT, FLANGE	9	9				
24	6S5–13337–10	PLATE, BAFFLE LOWER	1	1				
25	90110–06182	BOLT, HEXAGON SOCKET HEAD	1	1				
26	99530–10114	PIN, DOWEL	2	2				
27	6BH–1131C–00	COVER, JOINT	1	1				

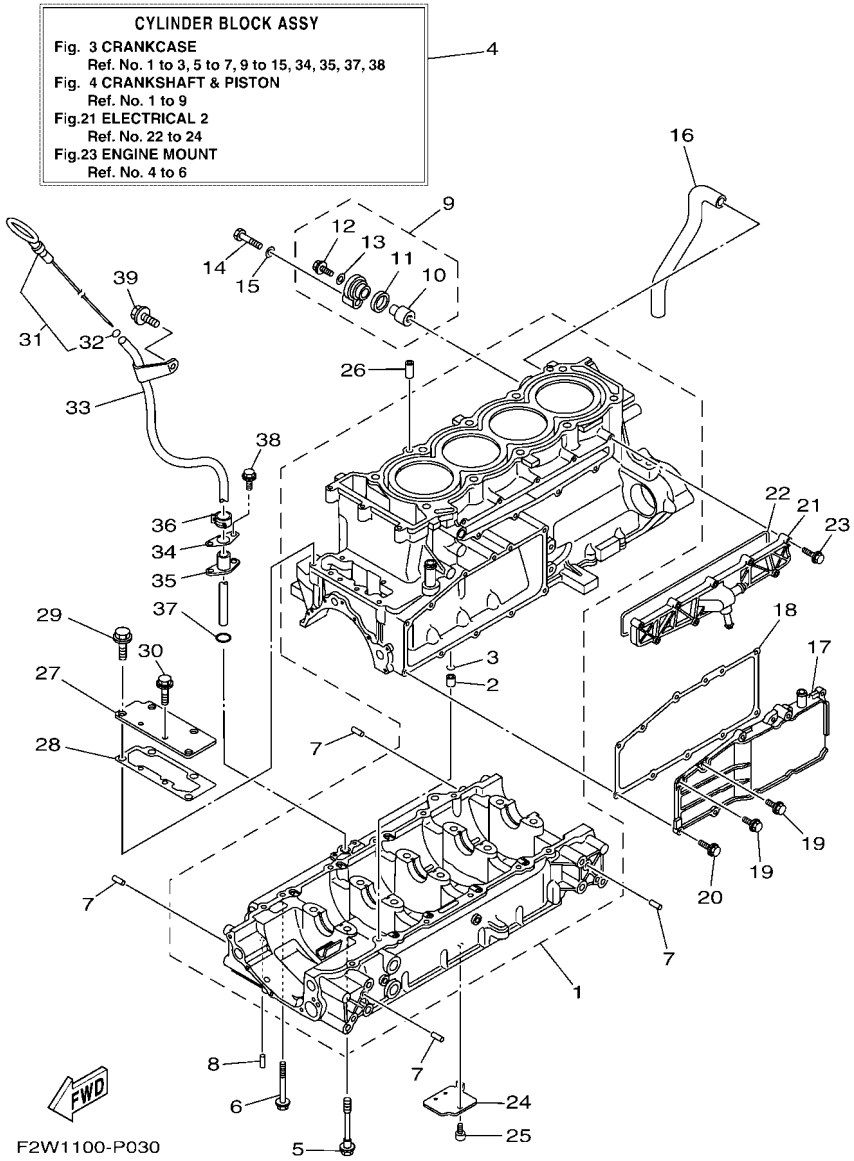

FIG. 3 CRANKCASE

REF. NO.	PART NO.	DESCRIPTION	F2TP	F2TR				REMARKS
28	6BH–1131B–00	GASKET, COVER	1	1				
29	95814–08020	BOLT, FLANGE	4	4				
30	95814–06016	BOLT, FLANGE	2	2				
31	6ET–15362–00	PLUG, OIL LEVEL	1	1				
32	93210–06632	.O-RING	1	1				
33	6CS–8572F–00	PIPE, OIL LEVEL	1	1				
34	6BH–1319K–00	PLATE	1	1				
35	6CS–85516–00	SPACER	1	1				
36	90467–150A1	CLIP	1	1				
37	93210–12016	O-RING	1	1				
38	90109–06268	BOLT	2	2				
39	90105–08021	BOLT, FLANGE	1	1				

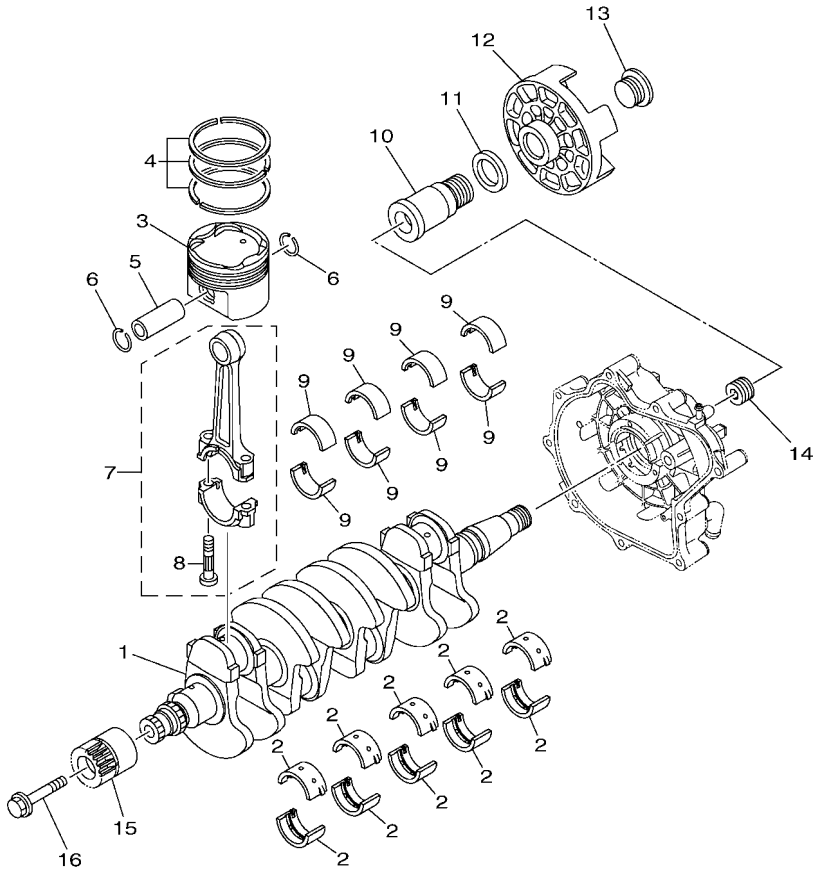

F3A5110-M040

FIG. 4 CRANKSHAFT & PISTON

REF. NO.	PART NO.	DESCRIPTION	F2TP	F2TR				REMARKS
1	6ET–11411–00	CRANKSHAFT	1	1				
2	6S5–11416–00	PLANE BEARING, CRANKSHAFT 1	10	10				UR BROWN
	6S5–11416–10	PLANE BEARING, CRANKSHAFT 1	10	10				UR BLACK
	6S5–11416–20	PLANE BEARING, CRANKSHAFT 1	10	10				UR BLUE
	6S5–11416–30	PLANE BEARING, CRANKSHAFT 1	10	10				UR GREEN
	6S5–11416–40	PLANE BEARING, CRANKSHAFT 1	10	10				UR YELLOW
3	6BH–11631–00–B0	PISTON (STD)	4	4				
4	6S5–11603–00	PISTON RING SET (STD)	4	4				
5	6S5–11633–00	PIN, PISTON	4	4				
6	93450–24028	CIRCLIP	8	8				
7	6BH–11650–10	CONNECTING ROD ASSY	4	4				
8	6S5–11654–10	.BOLT, CONNECTING ROD	2	2				
9	6S5–11656–40	PLANE BEARING, CONNECTING ROD	8	8				UR BLUE
	6S5–11656–50	PLANE BEARING, CONNECTING ROD	8	8				UR BLACK
	6S5–11656–60	PLANE BEARING, CONNECTING ROD	8	8				UR BROWN
	6S5–11656–70	PLANE BEARING, CONNECTING ROD	8	8				UR GREEN
10	6S5–17572–01	SHAFT, TRANSFER	1	1				
11	6S5–12289–00	WASHER	1	1				
12	6S5–45813–01–94	FLANGE, COUPLING	1	1				
13	6S5–17525–01	HOLDER 2	1	1				
14	6S5–11459–01	NUT, SPECIAL	1	1				
15	6BH–17586–11	GEAR, TRANSFER DRIVE	1	1				
16	6S5–17031–01	BOLT	1	1				

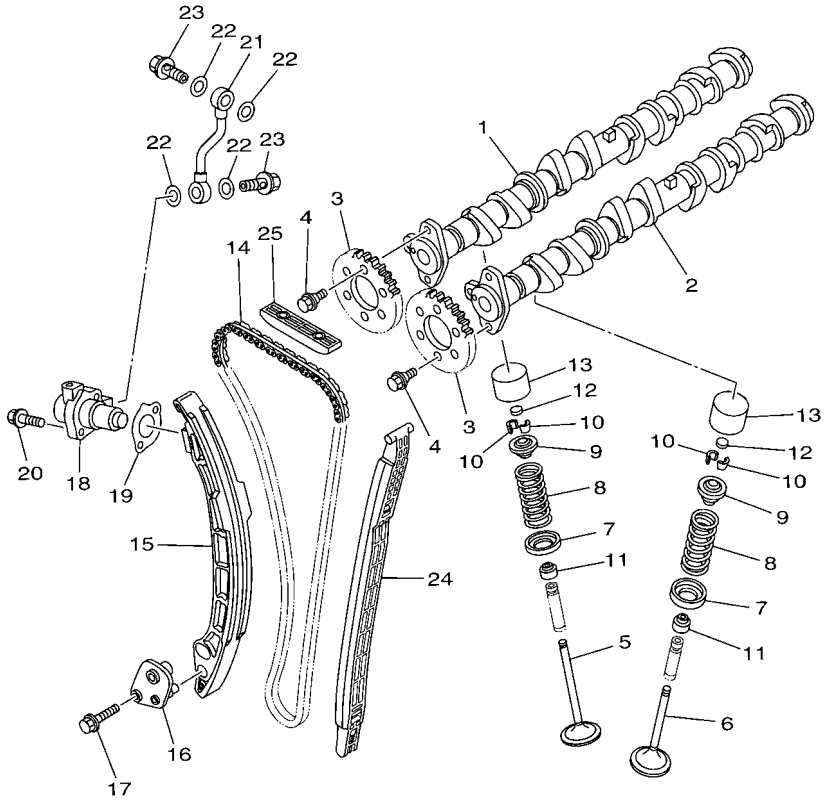

F2H1100-H050

FIG. 5 VALVE

REF. NO.	PART NO.	DESCRIPTION	F2TP	F2TR				REMARKS
1	6BH–12171–10	CAMSHAFT 1	1	1				
2	6BH–12181–10	CAMSHAFT 2	1	1				
3	6ET–12176–00	SPROCKET, CAM CHAIN	2	2				
4	90105–07006	BOLT, FLANGE	4	4				
5	6S5–12111–00	VALVE, INTAKE	8	8				
6	6S5–12121–00	VALVE, EXHAUST	8	8				
7	6S5–12116–00	SEAT, VALVE SPRING	16	16				
8	6S5–12113–00	SPRING, VALVE INNER	16	16				
9	6S5–12117–00	RETAINER, VALVE SPRING	16	16				
10	3LD–12118–00	LOCK, VALVE SPRING RETAINER	32	32				
11	51Y–12119–00	SEAL, VALVE STEM	16	16				
12	3LD–12168–00	PAD, ADJUSTING (1.20)	16	16				UR
	3LD–12168–20	PAD, ADJUSTING (1.25)	16	16				UR
	3LD–12168–40	PAD, ADJUSTING (1.30)	16	16				UR
	3LD–12168–60	PAD, ADJUSTING (1.35)	16	16				UR
	3LD–12168–80	PAD, ADJUSTING (1.40)	16	16				UR
	3LD–12168–A0	PAD, ADJUSTING (1.45)	16	16				UR
	3LD–12168–F0	PAD, ADJUSTING (1.50)	16	16				UR
	3LD–12168–H1	PAD, ADJUSTING (1.55)	16	16				UR
	3LD–12168–K1	PAD, ADJUSTING (1.60)	16	16				UR
	3LD–12168–M1	PAD, ADJUSTING (1.65)	16	16				UR
	3LD–12168–R1	PAD, ADJUSTING (1.70)	16	16				UR
	3LD–12168–U1	PAD, ADJUSTING (1.75)	16	16				UR
	3LD–12168–W1	PAD, ADJUSTING (1.80)	16	16				UR
	3LD–12168–Y1	PAD, ADJUSTING (1.85)	16	16				UR
	3LD–12169–11	PAD, ADJUSTING (1.90)	16	16				UR
	3LD–12169–31	PAD, ADJUSTING (1.95)	16	16				UR

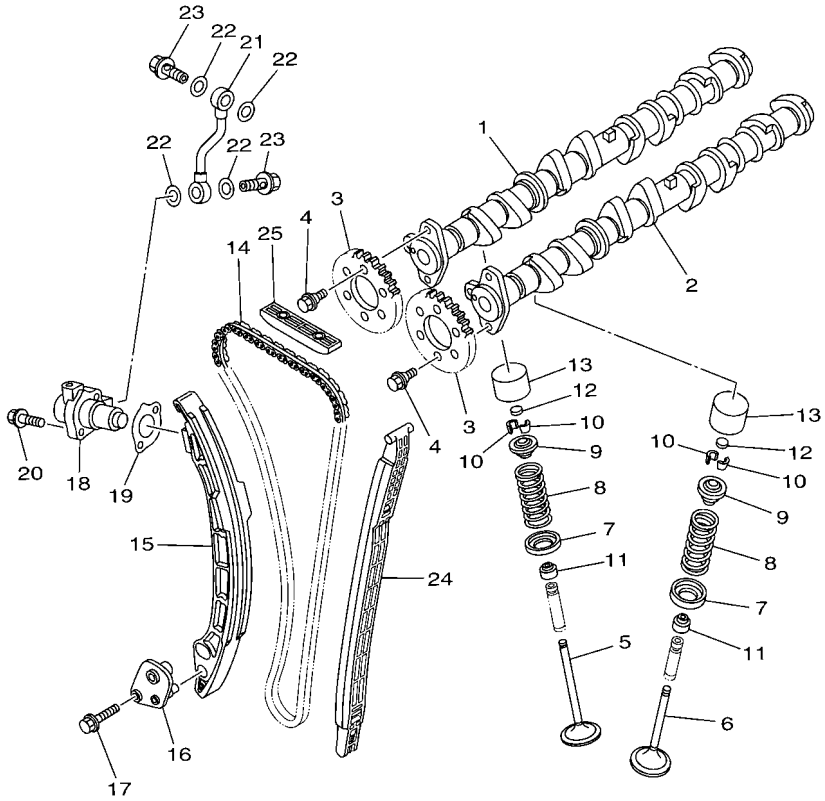

F2H1100-H050

FIG. 5 VALVE

REF. NO.	PART NO.	DESCRIPTION	F2TP	F2TR				REMARKS
12	3LD–12169–50	PAD, ADJUSTING (2.00)	16	16				UR
	3LD–12169–70	PAD, ADJUSTING (2.05)	16	16				UR
	3LD–12169–90	PAD, ADJUSTING (2.10)	16	16				UR
	3LD–12169–E0	PAD, ADJUSTING (2.15)	16	16				UR
	3LD–12169–G0	PAD, ADJUSTING (2.20)	16	16				UR
	3LD–12169–J0	PAD, ADJUSTING (2.25)	16	16				UR
	3LD–12169–L0	PAD, ADJUSTING (2.30)	16	16				UR
13	6S5–12153–00	LIFTER, VALVE	16	16				
14	94591–74152	CHAIN	1	1				
15	6ET–12252–00	DAMPER, CHAIN 2	1	1				
16	6BH–12279–00	PLATE	1	1				
17	95814–06030	BOLT, FLANGE	2	2				
18	6S5–12210–01	TENSIONER ASSY, CAM CHAIN	1	1				
19	6S5–121E2–00	GASKET	1	1				
20	91380–06025	BOLT	2	2				
21	6S5–13418–00	PIPE, OIL 2	1	1				
22	90430–10007	GASKET	4	4				
23	90401–10040	BOLT, UNION	2	2				
24	6ET–12251–00	DAMPER, CHAIN 1	1	1				
25	6BH–12241–00	GUIDE, STOPPER 2	1	1				

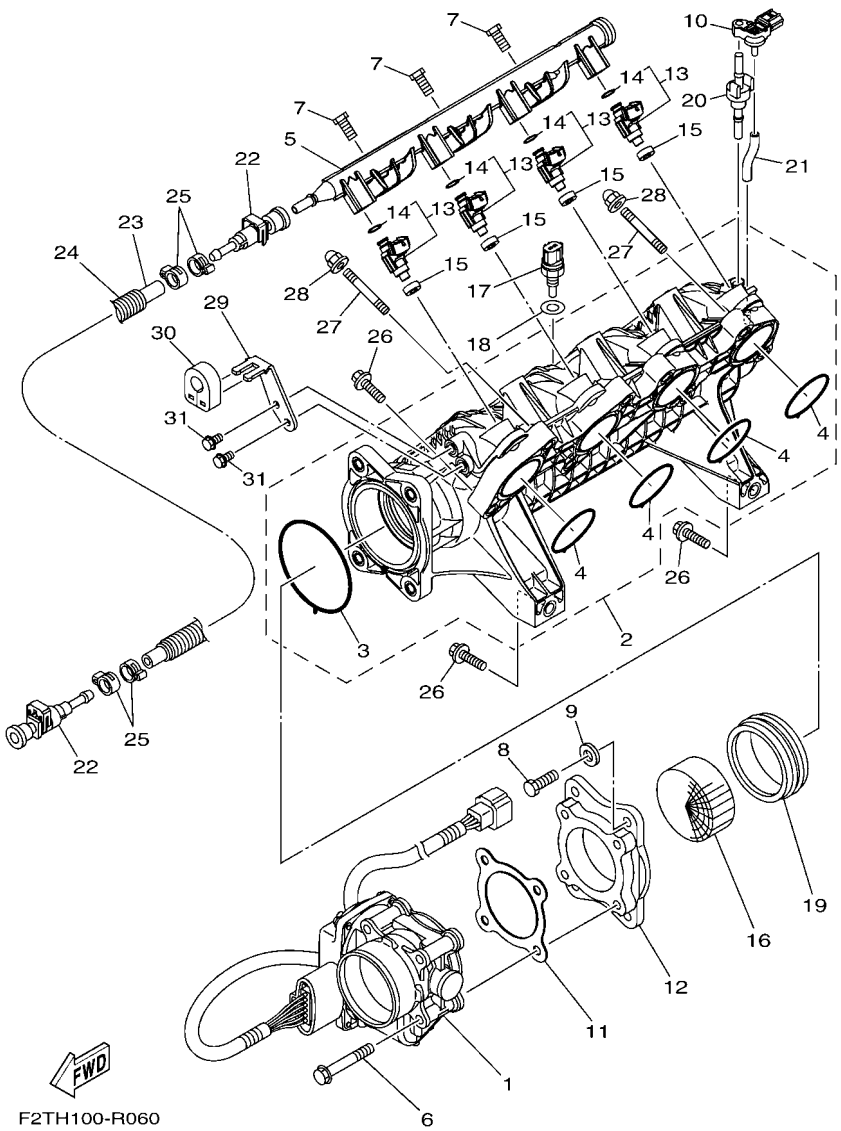

FIG. 6 INTAKE 1

REF. NO.	PART NO.	DESCRIPTION	F2TP	F2TR				REMARKS
1	6BH–13750–01	THROTTLE BODY ASSY	1	1				
2	6BH–13641–10	MANIFOLD, INTAKE 1	1	1				
3	6BH–14156–00	.GASKET, INSULATING	1	1				
4	6BH–14126–00	.GASKET	4	4				
5	6CS–12880–00	DELIVERY PIPE	1	1				
6	90105–08243	BOLT, FLANGE	4	4				
7	6CS–14446–00	BOLT	3	3				
8	97013–08025	BOLT	4	4				
9	92903–08600	WASHER, PLATE	4	4				
10	6BH–82380–00	SENSOR, PRESSURE	1	1				
11	6CR–14536–00	GASKET	1	1				
12	6CR–14163–00	SPACER	1	1				
13	6S5–13761–10	INJECTOR	4	4				
14	68V–1416A–00	.O-RING	1	1				
15	8FP–13556–10	GASKET, MANIFOLD	4	4				
16	6D3–1444B–00	RIBBON	1	1				
17	65L–85886–00	THERMOSENSOR	1	1				
18	6S5–14285–00	WASHER	1	1				
19	6S5–14457–00	HOLDER	1	1				
20	6BH–14445–00	GROMMET	1	1				
21	6BH–13532–00	HOSE, VACUUM SENSING 3	1	1				
22	6S5–24300–01	FUEL PIPE JOINT	2	2				
23	6AN–14294–10	HOSE	1	1				
24	90447–19017	TUBE (L495)	1	1				
25	90450–17M17	HOSE CLAMP ASSY	4	4				
26	97513–08535	BOLT, WITH WASHER	8	8				
27	90116–08032	BOLT, STUD	2	2				

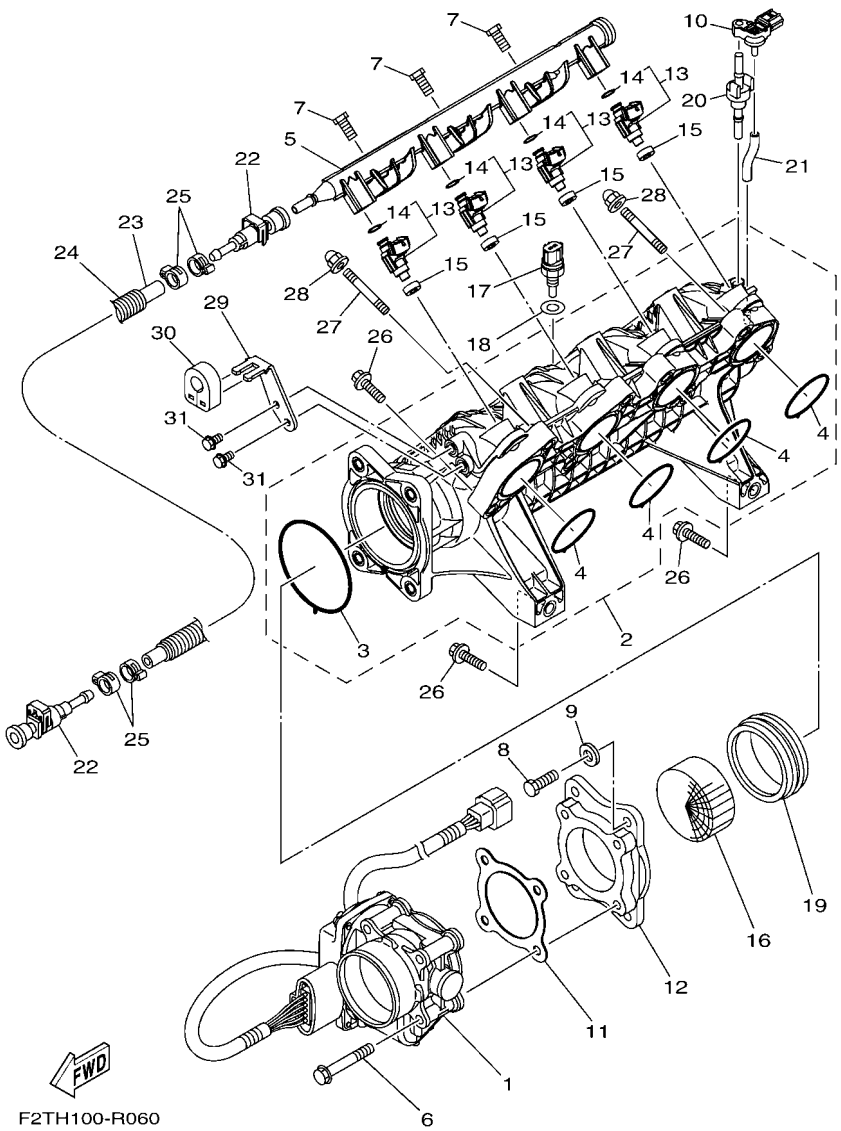

FIG. 6 INTAKE 1

REF. NO.	PART NO.	DESCRIPTION	F2TP	F2TR				REMARKS
28	90176–08080	NUT, CROWN	2	2				
29	6CR–14572–00	PLATE, STAY	1	1				
30	6CS–14445–00	GROMMET	1	1				
31	95023–06012	BOLT	2	2				

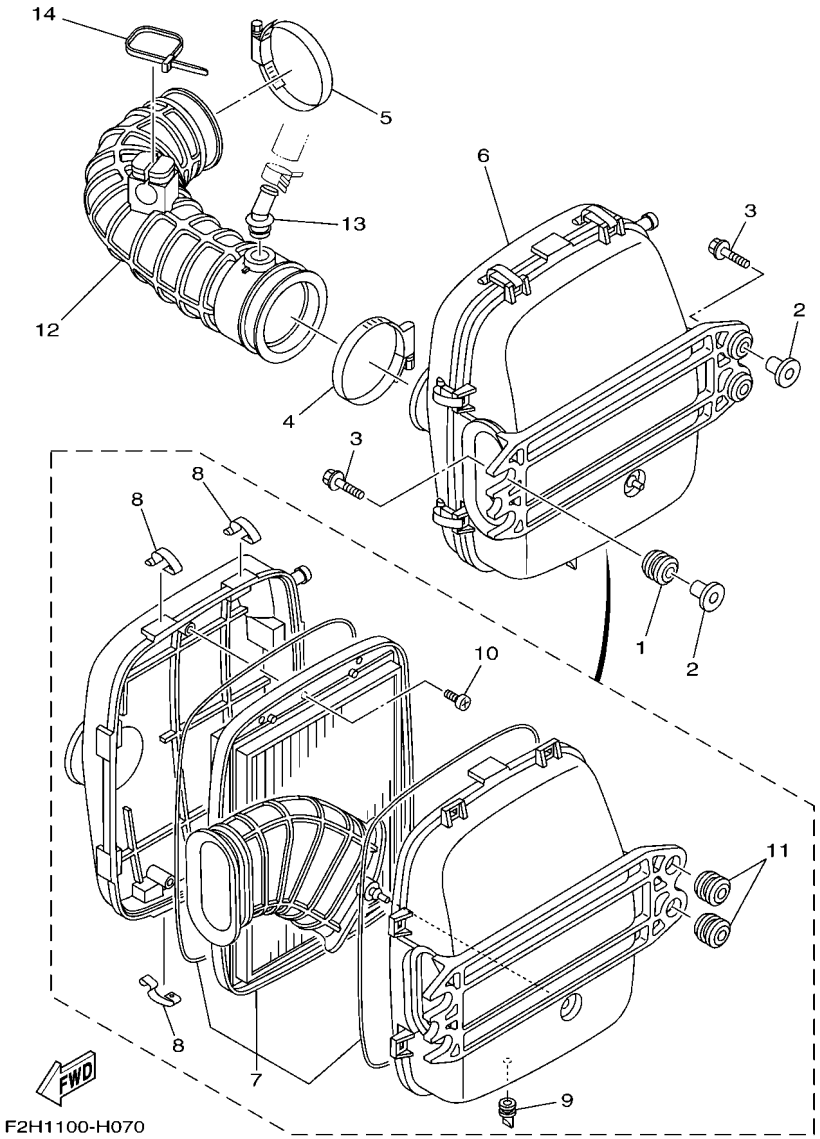

FIG. 7 INTAKE 2

REF. NO.	PART NO.	DESCRIPTION	F2TP	F2TR				REMARKS
1	90480–22M15	GROMMET	2	2				
2	90387–08M37	COLLAR	4	4				
3	90119–08M22	BOLT, WITH WASHER	4	4				
4	90450–90002	HOSE CLAMP ASSY	1	1				
5	90450–90002	HOSE CLAMP ASSY	1	1				
6	6S5–E4410–01	AIR CLEANER ASSY.	1	1				
7	6S5–E4451–00	.ELEMENT, AIR CLEANER	1	1				
8	6S5–E4436–00	.HOOK	8	8				
9	6S5–G2717–00	.RUBBER, SEAL 2	1	1				
10	97780–60516	.SCREW, TAPPING	3	3				
11	90480–22801	.GROMMET	2	2				
12	6BH–E4419–00	PIPE	1	1				
13	6BH–R1142–10	CONNECTION	1	1				
14	90464–40825	CLAMP	1	1				

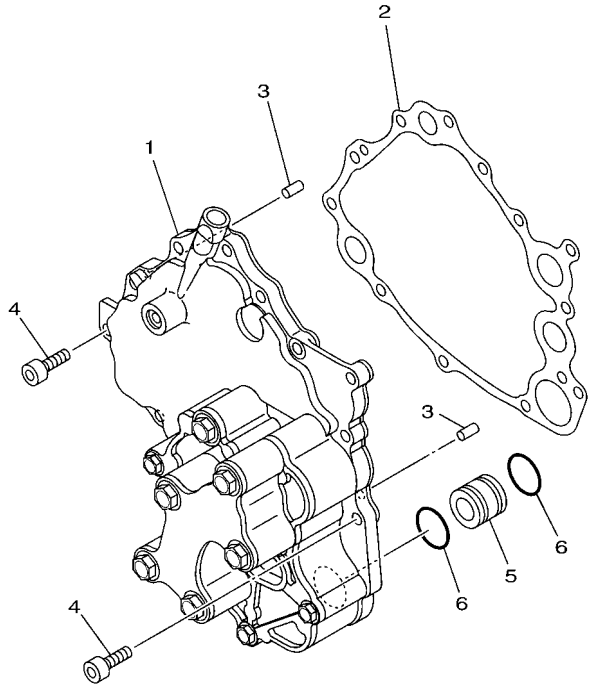

F2M7100-L080

FIG. 8 OIL PUMP

REF. NO.	PART NO.	DESCRIPTION	F2TP	F2TR				REMARKS
1	6BH–13300–12	OIL PUMP ASSY	1	1				
2	6S5–13563–00	GASKET	1	1				
3	93606–12019	PIN, DOWEL	2	2				
4	90110–06404	BOLT, HEXAGON SOCKET HEAD	12	12				
5	6S5–13446–10	CONNECTOR	1	1				
6	93210–21631	O-RING	2	2				

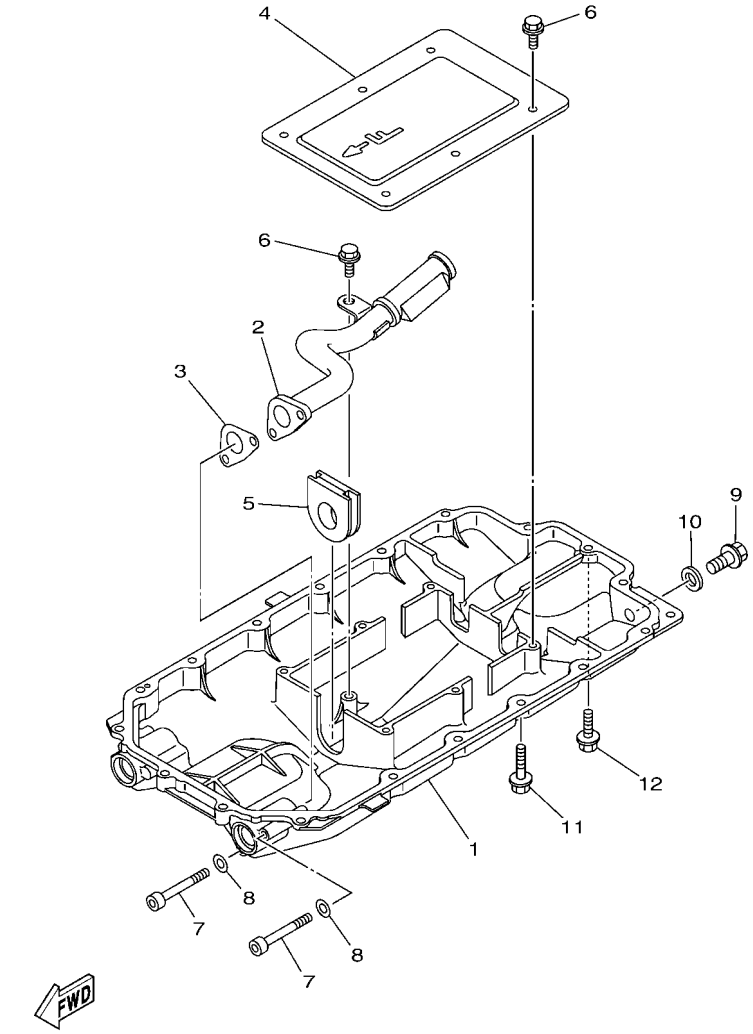

F2W1100-P090

FIG. 9 OIL PAN

REF. NO.	PART NO.	DESCRIPTION	F2TP	F2TR				REMARKS
1	6S5–1310A–25	PAN, OIL	1	1				
2	6S5–13405–11	OIL PIPE COMP. 1	1	1				
3	6S5–13477–00	GASKET	1	1				
4	6S5–13317–10	PLATE, BAFFLE	1	1				
5	6S5–15486–10	GROMMET	1	1				
6	95817–06014	BOLT, FLANGE	7	7				
7	91314–06060	BOLT, HEXAGON SOCKET HEAD	2	2				
8	90201–06028	WASHER, PLATE	2	2				
9	95814–08020	BOLT, FLANGE	1	1				
10	90430–08209	GASKET	1	1				
11	95024–06035	BOLT, FLG.(SMALL HEAD)	17	17				
12	95024–06020	BOLT, FLG.(SMALL HEAD)	1	1				

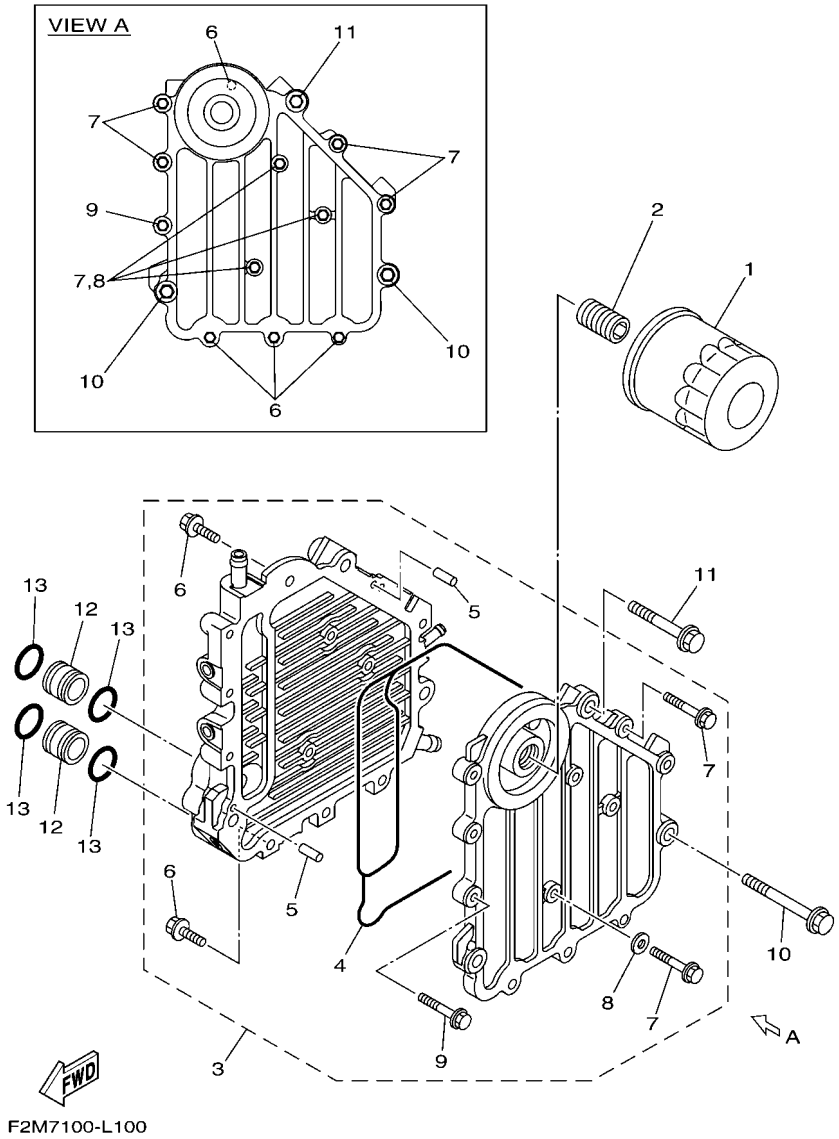

FIG. 10 OIL COOLER

REF. NO.	PART NO.	DESCRIPTION	F2TP	F2TR				REMARKS
1	69J–13440–03	ELEMENT ASSY, OIL CLEANER	1	1				
2	6S5–12858–00	BOLT, UNION	1	1				
3	6BH–13470–21	OIL COOLER ASSY	1	1				
4	6BH–13556–00	.GASKET, MANIFOLD	1	1				
5	93604–10M03	.PIN, DOWEL	2	2				
6	90105–06184	.BOLT, FLANGE	4	4				
7	90105–06185	.BOLT, FLANGE	7	7				
8	90430–06232	.GASKET	3	3				
9	90105–08054	.BOLT, FLANGE	1	1				
10	90105–08169	BOLT, FLANGE	2	2				
11	90105–08170	BOLT, FLANGE	1	1				
12	60E–13446–00	CONNECTOR	2	2				
13	93210–18322	O-RING	4	4				

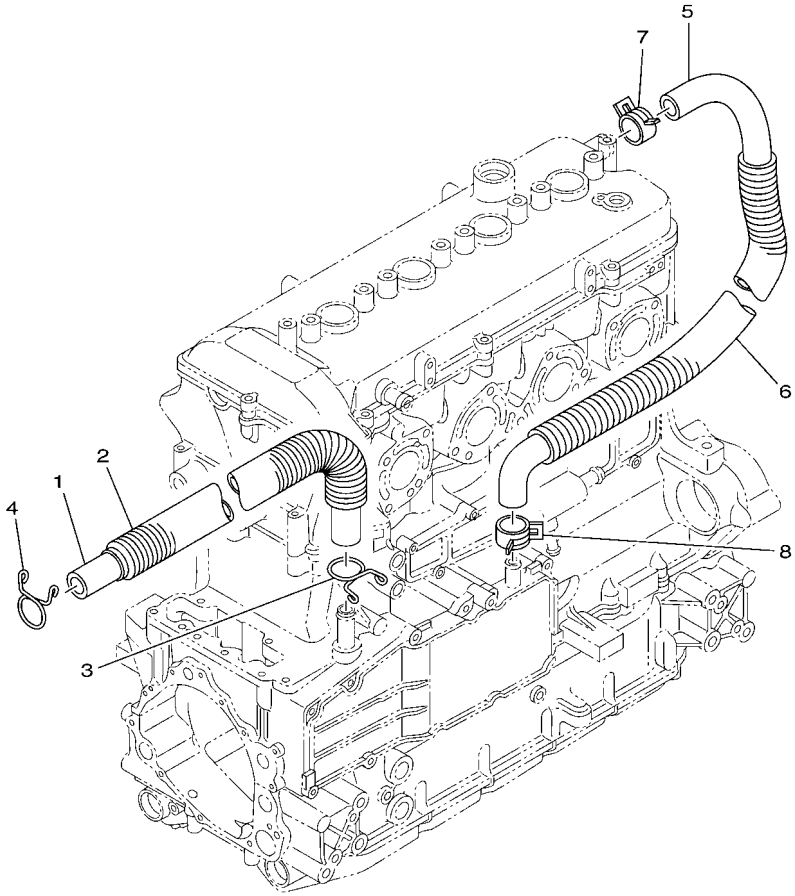

F2M7100-L110

FIG. 11 BREATHER OIL

REF. NO.	PART NO.	DESCRIPTION	F2TP	F2TR				REMARKS
1	6S5–11166–10	PIPE, BREATHER 1	1	1				
2	90447–22015	TUBE (L410)	1	1				
3	90467–190A0	CLIP	1	1				
4	90467–190A0	CLIP	1	1				
5	6S5–11167–10	PIPE, BREATHER 2	1	1				
6	90447–22016	TUBE (L490)	1	1				
7	90467–240A0	CLIP	1	1				
8	90467–200A3	CLIP	1	1				

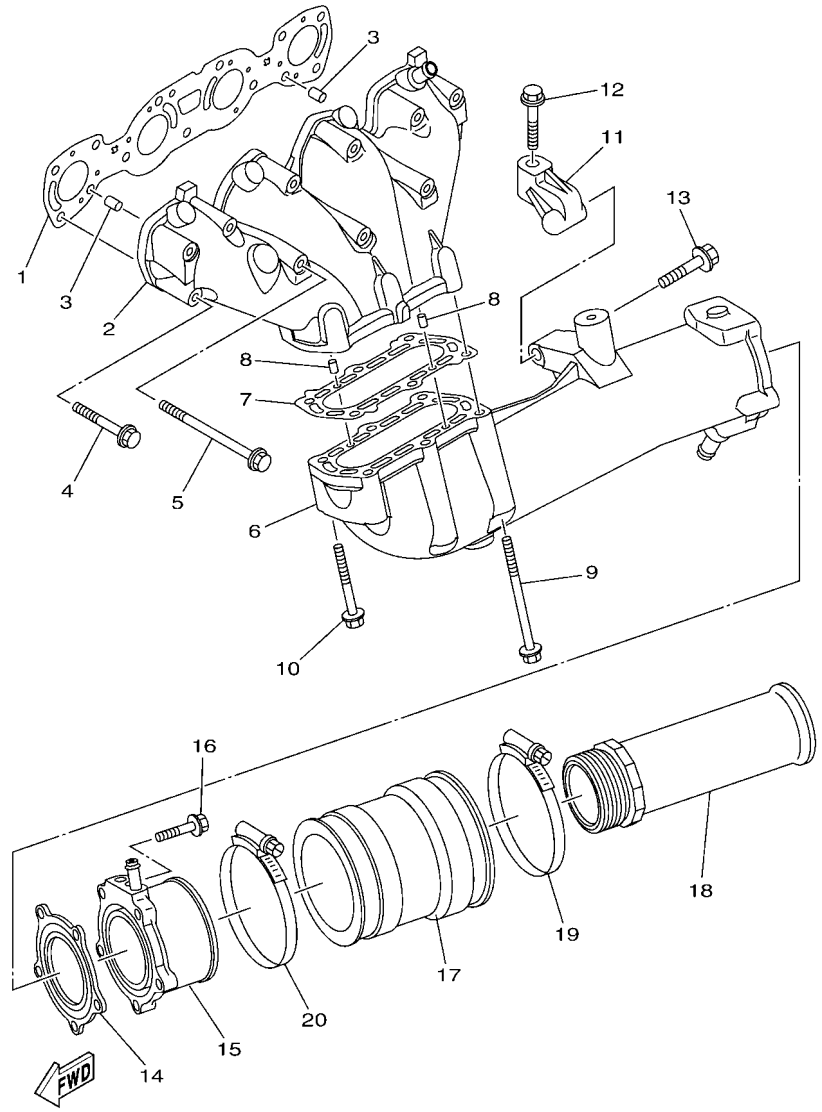

F3FJ110-S120

FIG. 12 EXHAUST 1

REF. NO.	PART NO.	DESCRIPTION	F2TP	F2TR				REMARKS
1	6BH–14613–00	GASKET, EXHAUST PIPE	1	1				
2	6BH–14711–10	MUFFLER 1	1	1				
3	93608–16M16	PIN, DOWEL	2	2				
4	90119–08034	BOLT, WITH WASHER	8	8				
5	90119–08097	BOLT, WITH WASHER	3	3				
6	6BH–14721–10	MUFFLER 2	1	1				
7	6S5–14739–00	GASKET, MUFFLER DAMPER 1	1	1				
8	93606–12019	PIN, DOWEL	2	2				
9	90119–08097	BOLT, WITH WASHER	4	4				
10	90119–08034	BOLT, WITH WASHER	2	2				
11	6S5–14771–00–94	STAY, MUFFLER 1	1	1				
12	90119–08096	BOLT, WITH WASHER	1	1				
13	90119–10029	BOLT, WITH WASHER	1	1				
14	6BH–14749–00	GASKET, MUFFLER DAMPER 2	1	1				
15	6BH–14784–01–94	PIPE, TAIL	1	1				
16	95024–08035	BOLT, FLG.(SMALL HEAD)	5	5				
17	6S5–E4752–00	PIPE, OUTLET	1	1				
18	6CS–1475A–00	PIPE 1	1	1				
19	90450–99016	HOSE CLAMP ASSY	1	1				
20	90450–99015	HOSE CLAMP ASSY	1	1				

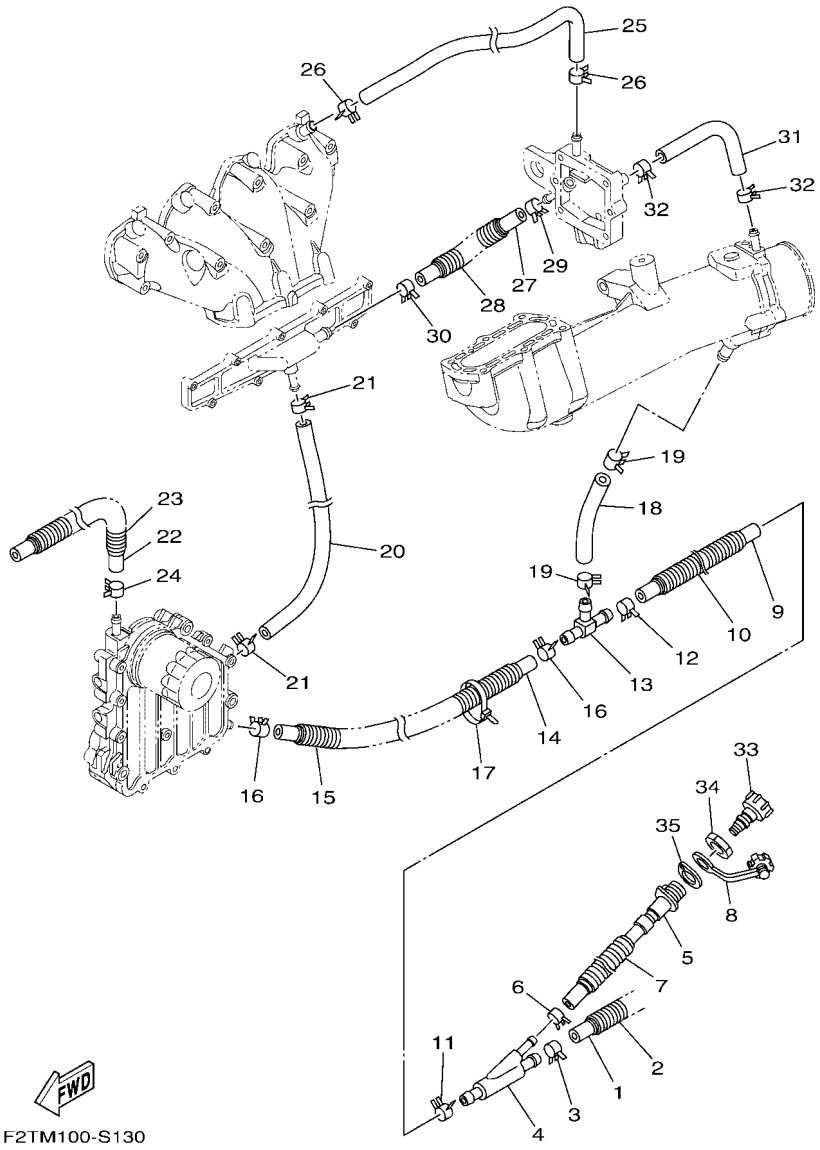

FIG. 13 EXHAUST 2

REF. NO.	PART NO.	DESCRIPTION	F2TP	F2TR				REMARKS
1	90445–21806	HOSE (L250)	1	1				
2	90447–22801	TUBE (L200)	1	1				
3	90467–200A3	CLIP	1	1				
4	60E–12581–00	JOINT, HOSE 1	1	1				
5	6CS–12580–00	JOINT ASSY	1	1				
6	90467–150A5	CLIP	1	1				
7	90447–19801	TUBE (L485)	1	1				
8	682–84385–01	CAP,1	1	1				
9	6S5–1243E–01	HOSE 2	1	1				
10	90447–22011	TUBE (L170)	1	1				
11	90467–200A3	CLIP	1	1				
12	90467–200A3	CLIP	1	1				
13	6BH–12584–00	JOINT, HOSE 3	1	1				
14	90445–18012	HOSE (L400)	1	1				
15	90447–19005	TUBE (L260)	1	1				
16	90467–160A0	CLIP	2	2				
17	90464–35132	CLAMP	1	1				
18	6S5–12589–01	HOSE 6	1	1				
19	90467–200A3	CLIP	2	2				
20	6BH–1244H–00	HOSE 5	1	1				
21	90467–150A1	CLIP	2	2				
22	6CS–12588–00	HOSE 5	1	1				
23	90447–19018	TUBE (L760)	1	1				
24	90467–160A0	CLIP	1	1				
25	6BH–12577–00	HOSE 2	1	1				
26	90467–160A0	CLIP	2	2				
27	6S5–12579–00	HOSE 4	1	1				

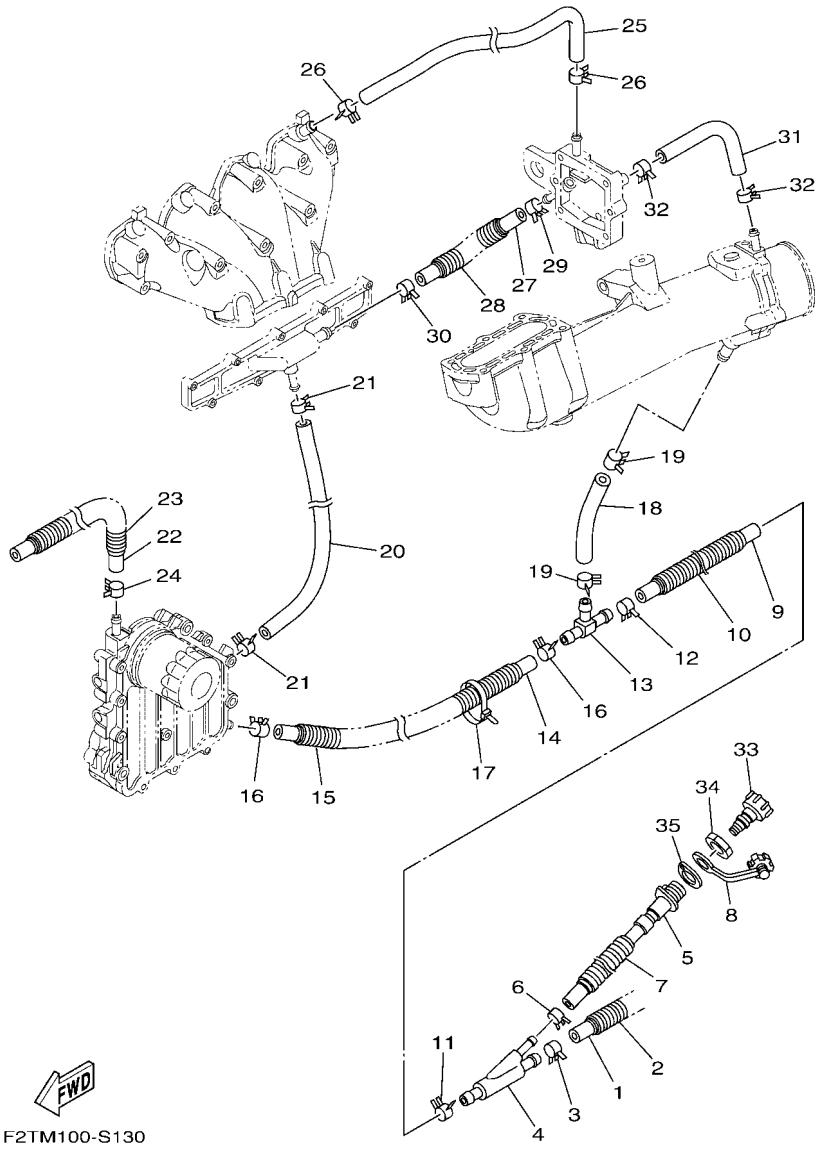

FIG. 13 EXHAUST 2

REF. NO.	PART NO.	DESCRIPTION	F2TP	F2TR				REMARKS
28	90447–19011	TUBE (L150)	1	1				
29	90467–160A0	CLIP	1	1				
30	90467–170A5	CLIP	1	1				
31	90445–16013	HOSE (L220)	1	1				
32	90467–160A0	CLIP	2	2				
33	67X–E2590–10	CONDUCTION ASSY	1	1				
34	EU0–61652–00	NUT	1	1				
35	F2S–U7525–00	PACKING	1	1				

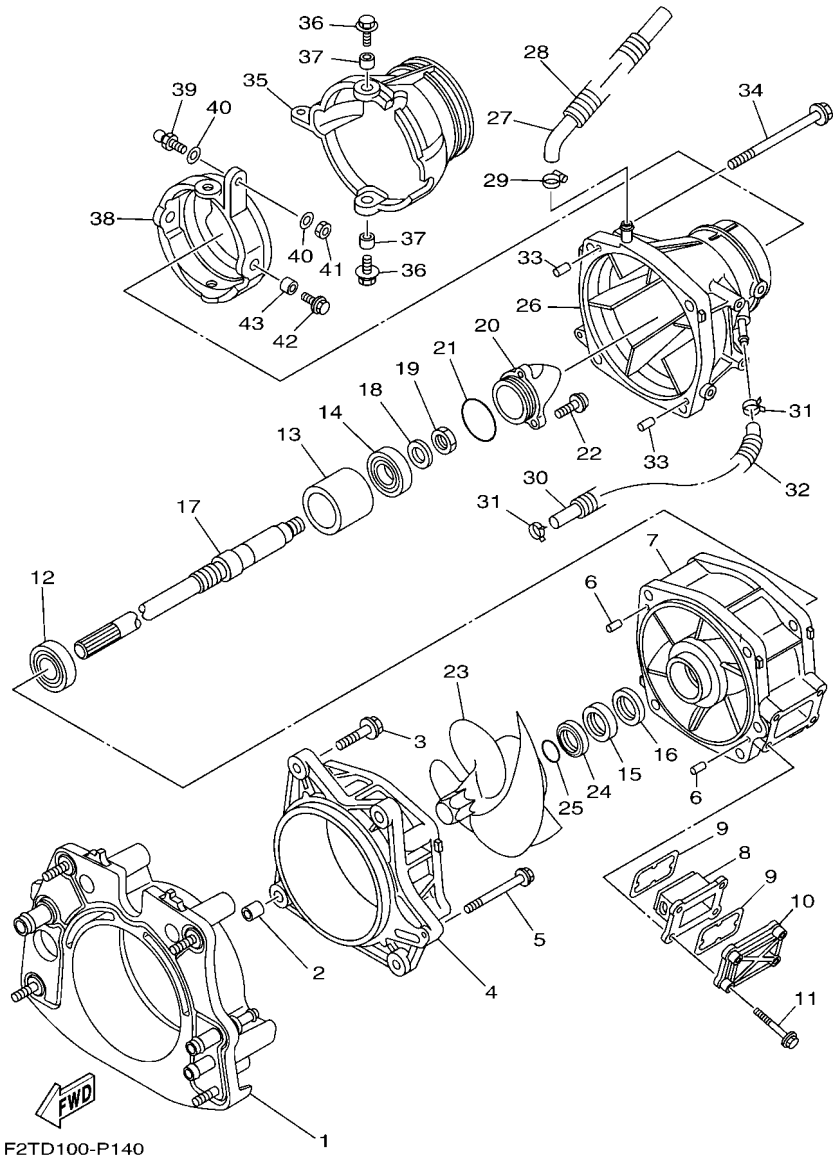

FIG. 14 JET UNIT 1

REF. NO.	PART NO.	DESCRIPTION	F2TP	F2TR				REMARKS
1	6CS–G5831–10	PLATE, TRANSOM	1	1				
2	99590–14016	PIN, DOWEL	2	2				
3	90119–10810	BOLT, WITH WASHER	4	4				
4	66V–51312–01–94	HOUSING, IMPELLER	1	1				
5	90119–06893	BOLT, WITH WASHER	1	1				
6	93606–12019	PIN, DOWEL	2	2				
7	6S5–51315–02	DUCT, IMPELLER	1	1				
8	6AN–G6882–00	FILTER	1	1				
9	66V–42414–00	O-RING	2	2				
10	6AN–G5214–00	COVER, WATER INLET 1	1	1				
11	90119–06897	BOLT, WITH WASHER	4	4				
12	93306–20654	BEARING	1	1				
13	6CS–G5538–00	SPACER 1	1	1				
14	93306–30537	BEARING	1	1				
15	93102–31009	OIL SEAL	1	1				
16	93101–31001	OIL SEAL	1	1				
17	6S5–45511–00	SHAFT, DRIVE	1	1				
18	9290P–20600	WASHER	1	1				
19	90170–20802	NUT	1	1				
20	6AN–R1326–00	CAP	1	1				
21	93210–54010	O-RING	1	1				
22	90110–06822	BOLT, HEXAGON SOCKET HEAD	3	3				
23	6BH–R1321–01	IMPELLER	1	1				
24	6BH–51348–01	SPACER	1	1				
25	93210–30611	O-RING	1	1				
26	6BH–R1318–01	NOZZLE	1	1				
27	6CS–U72M2–00	HOSE 1	1	1				

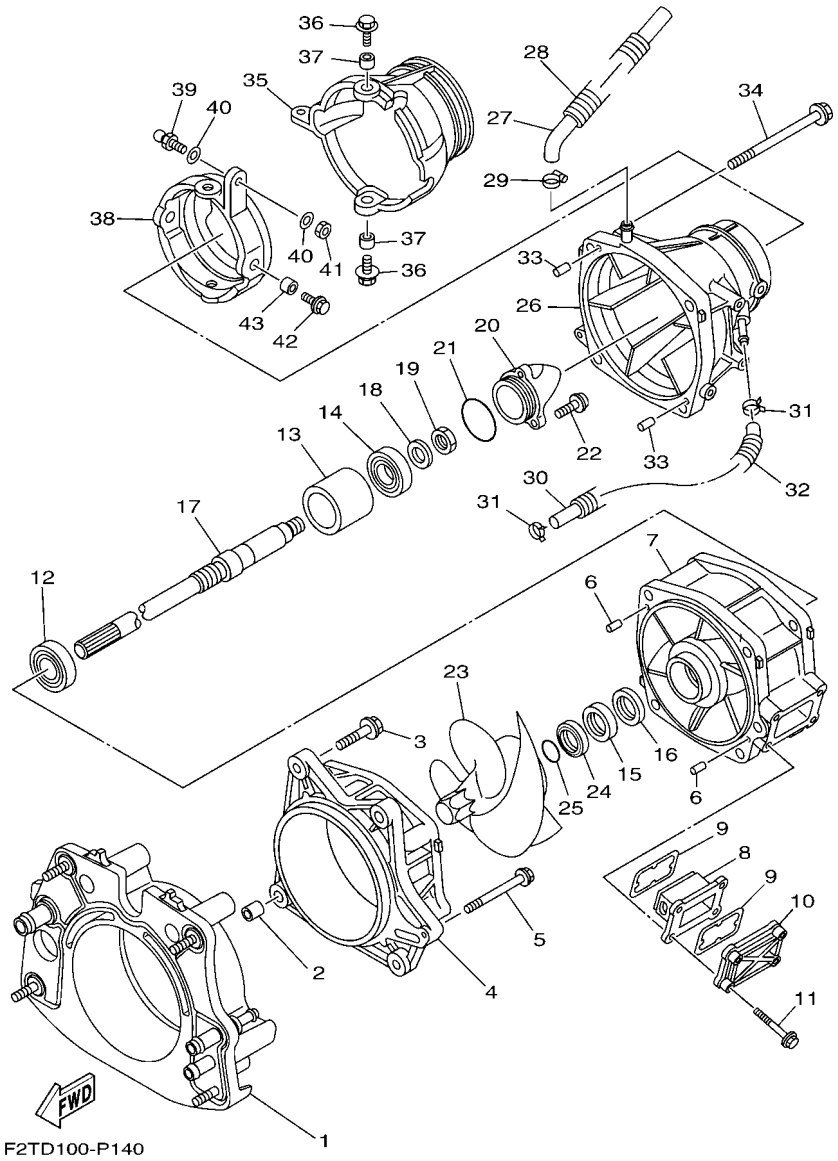

FIG. 14 JET UNIT 1

REF. NO.	PART NO.	DESCRIPTION	F2TP	F2TR				REMARKS
28	6CN–U773D–01	TUBE	1	1				
29	90601–118UF	BAND, HOSE 18	1	1				
30	6ET–U215E–00	HOSE	1	1				
31	90467–14803	CLIP	2	2				
32	6ET–U773D–00	TUBE	1	1				
33	93606–12019	PIN, DOWEL	2	2				
34	90119–10806	BOLT, WITH WASHER	4	4				
35	6S5–R1313–01	NOZZLE, DEFLECTOR	1	1				
36	90119–08851	BOLT, WITH WASHER	2	2				
37	90387–08M06	COLLAR	2	2				
38	6AN–R1190–00	RING,TRIM	1	1				
39	GH3–U146E–00	STUD, JOINT BALL	1	1				
40	90201–068M4	WASHER, PLATE	2	2				
41	9538R–06700	NUT	1	1				
42	90119–08851	BOLT, WITH WASHER	2	2				
43	90387–08M06	COLLAR	2	2				

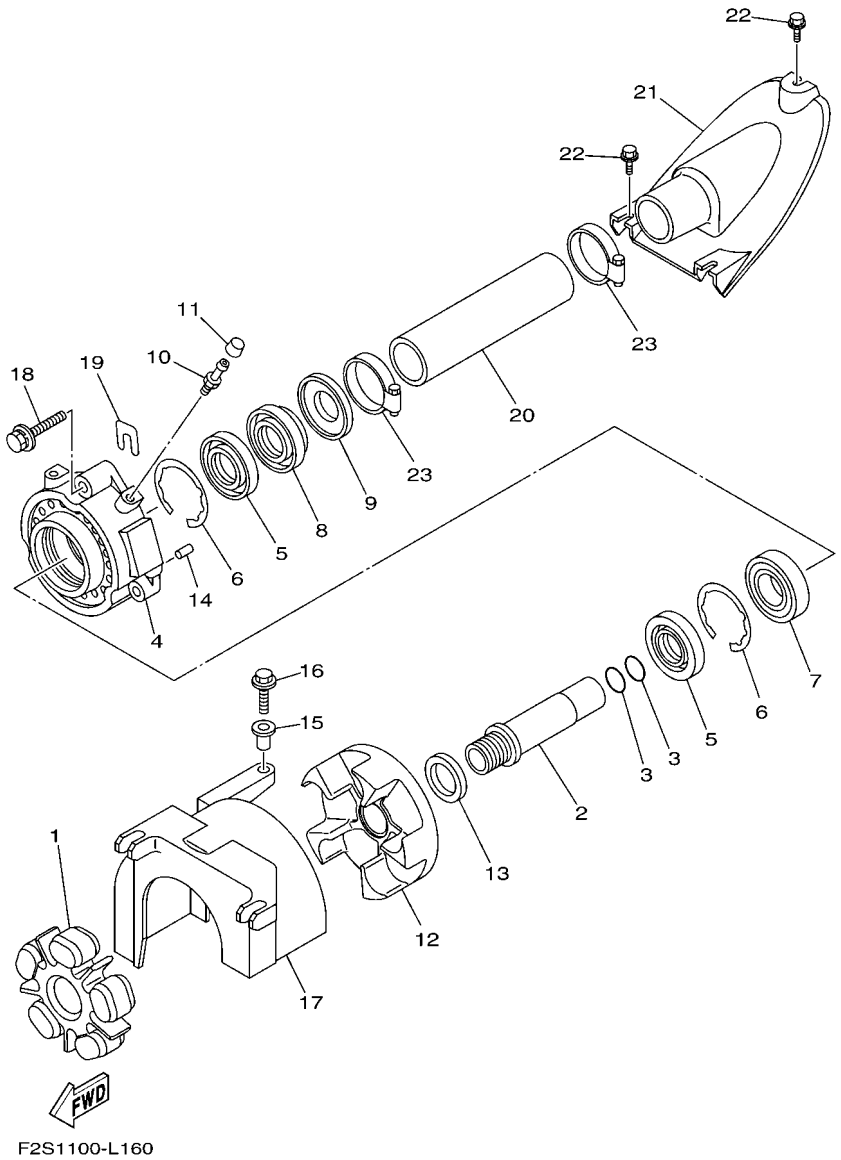

FIG. 15 JET UNIT 2

REF. NO.	PART NO.	DESCRIPTION	F2TP	F2TR				REMARKS
1	6BH–4581J–00	RUBBER SHAFT COUPLING	1	1				
2	6S5–51323–00	SHAFT, COUPLER	1	1				
3	93210–22MF1	O-RING	2	2				
4	6S5–45332–00–94	HOUSING, BEARING	1	1				
5	93102–29008	OIL SEAL	2	2				
6	93450–66156	CIRCLIP	2	2				
7	93306–20655	BEARING	1	1				
8	93102–29009	OIL SEAL	1	1				
9	6ET–45613–00	WASHER, THRUST	1	1				
10	93700–06M03	NIPPLE, GREASE	1	1				
11	663–45119–00	CAP, GREASE NIPPLE	1	1				
12	6S5–45593–00–94	FLANGE, COUPLING 1	1	1				
13	6ET–E2289–00	WASHER	1	1				
14	93606–12019	PIN, DOWEL	2	2				
15	90387–06289	COLLAR	1	1				
16	90119–06891	BOLT, WITH WASHER	1	1				
17	6S5–R1381–01	COVER	1	1				
18	90119–089UU	BOLT, WITH WASHER	3	3				
19	GD0–U7249–00–05	SHIM (T=0.5)	2	2				UN
20	F2S–U883B–00	PIPE 1	1	1				
21	F2S–U883E–00	JOINT, PIPE	1	1				
22	90109–06832	BOLT	3	3				
23	90601–152U3	BAND, HOSE 52	2	2				

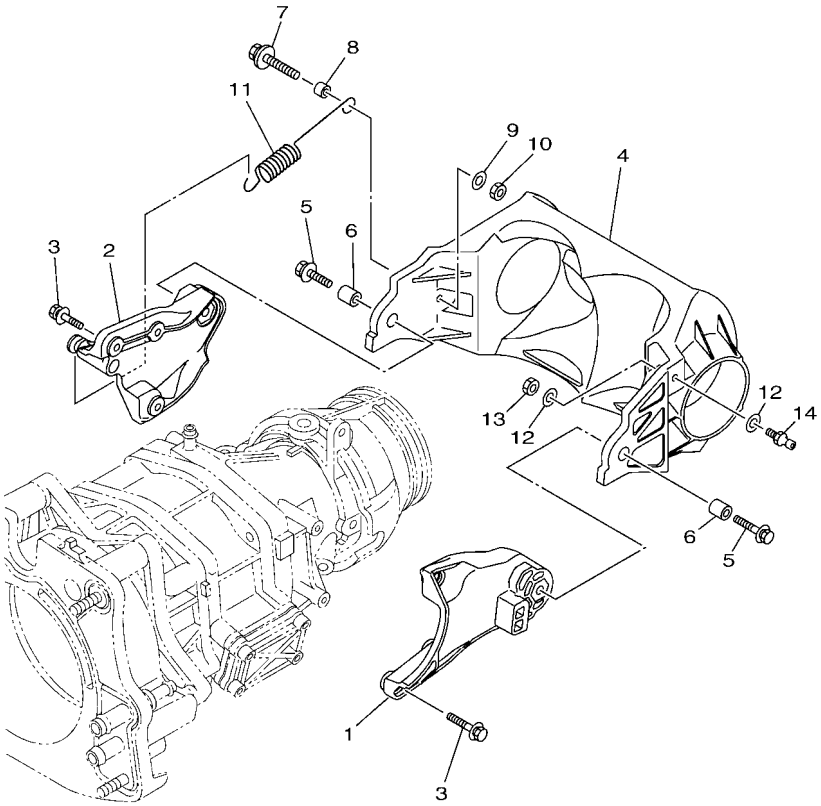

F3J7100-P170

FIG. 16 JET UNIT 3

REF. NO.	PART NO.	DESCRIPTION	F2TP	F2TR				REMARKS
1	6ET–R1341–00	BRACKET 1	1	1				
2	6ET–R1342–00	BRACKET 2	1	1				
3	90119–06891	BOLT, WITH WASHER	6	6				
4	6ET–R1314–01	GATE, REVERSE	1	1				
5	90119–08840	BOLT, WITH WASHER	2	2				
6	90387–08M30	COLLAR	2	2				
7	90119–069UX	BOLT, WITH WASHER	1	1				
8	90387–06M30	COLLAR	1	1				
9	90201–06801	WASHER, PLATE	1	1				
10	9538R–06600	NUT	1	1				
11	6S5–52358–00	SPRING, RETAINER	1	1				
12	90201–06801	WASHER, PLATE	2	2				
13	9538R–06600	NUT	1	1				
14	EU0–U1461–03	STUD, JOINT BALL	1	1				

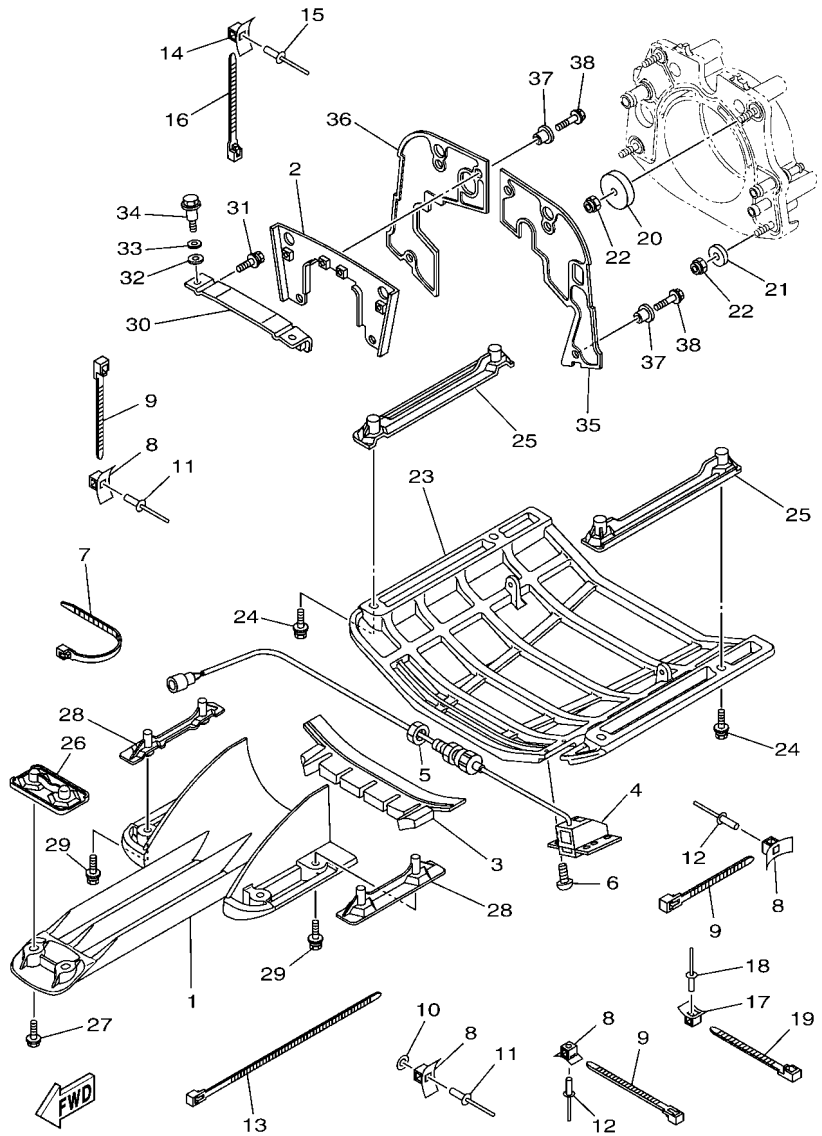

F2TD100-P170

FIG. 17 JET UNIT 4

REF. NO.	PART NO.	DESCRIPTION	F2TP	F2TR				REMARKS
1	6CS–R1333–00	SCREEN, INTAKE	1	1				
2	6AN–R1341–01	BRACKET 1	1	1				
3	F2S–U72C0–01	SPACER	1	1				
4	F1S–U8K31–02	SENSOR SPEED	1	1				
5	F2C–U151S–00	NUT	1	1				
6	90150–05807	SCREW, ROUND HEAD	4	4				
7	90464–32801	CLAMP	1	1				
8	F1W–U828M–00	BASE, CLAMP	8	8				
9	90464–32801	CLAMP	7	7				
10	9299R–05200	WASHER	1	1				
11	90267–489U6	RIVET, BLIND	5	5				
12	90267–489U6	RIVET, BLIND	3	3				
13	90464–99801	CLAMP	1	1				
14	F1W–U828M–00	BASE, CLAMP	1	1				
15	90267–489U6	RIVET, BLIND	1	1				
16	90464–32801	CLAMP	1	1				
17	F1W–U828M–00	BASE, CLAMP	1	1				
18	90267–489U6	RIVET, BLIND	1	1				
19	90464–32801	CLAMP	1	1				
20	F1S–U725E–01	WASHER	2	2				
21	90201–10801	WASHER, PLATE	2	2				
22	9572R–10300	NUT, NYLON	4	4				
23	F2S–6273B–00	PLATE 2	1	1				
24	90119–08823	BOLT, WITH WASHER	4	4				
25	F1B–U8572–01	BRACKET 2	2	2				
26	F2S–U8577–00	BRACKET, 3	1	1				
27	90119–08823	BOLT, WITH WASHER	2	2				

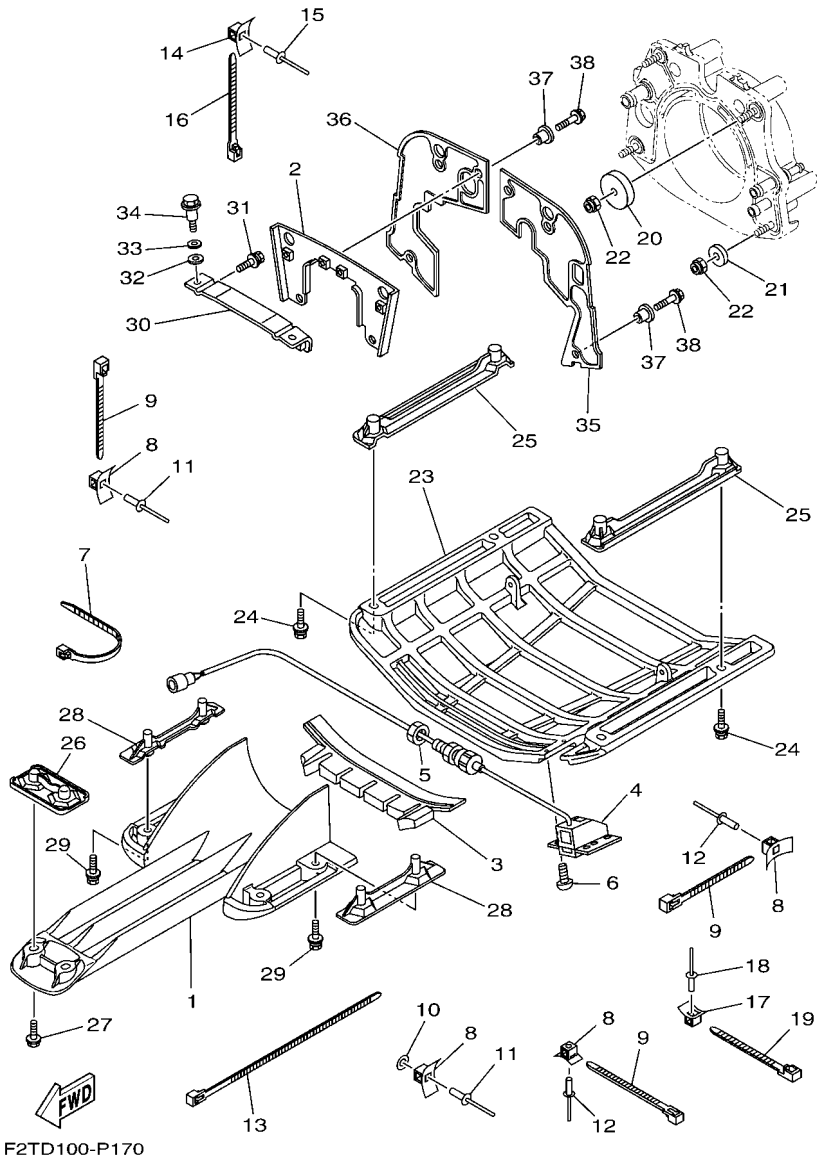

FIG. 17 JET UNIT 4

REF. NO.	PART NO.	DESCRIPTION	F2TP	F2TR				REMARKS
28	F1G–U8571–02	BRACKET 1	2	2				
29	90119–08823	BOLT, WITH WASHER	4	4				
30	F2C–U7557–01	BRACKET	1	1				
31	90119–089U7	BOLT, WITH WASHER	2	2				
32	90430–12002	GASKET	2	2				
33	92990–12200	WASHER, PLAIN	2	2				
34	90109–08041	BOLT	2	2				
35	F3J–U757E–00	PLATE, RUBBER 1	1	1				
36	F3J–U757F–00	PLATE, RUBBER 2	1	1				
37	90387–06080	COLLAR	6	6				
38	90119–06827	BOLT, WITH WASHER	6	6				

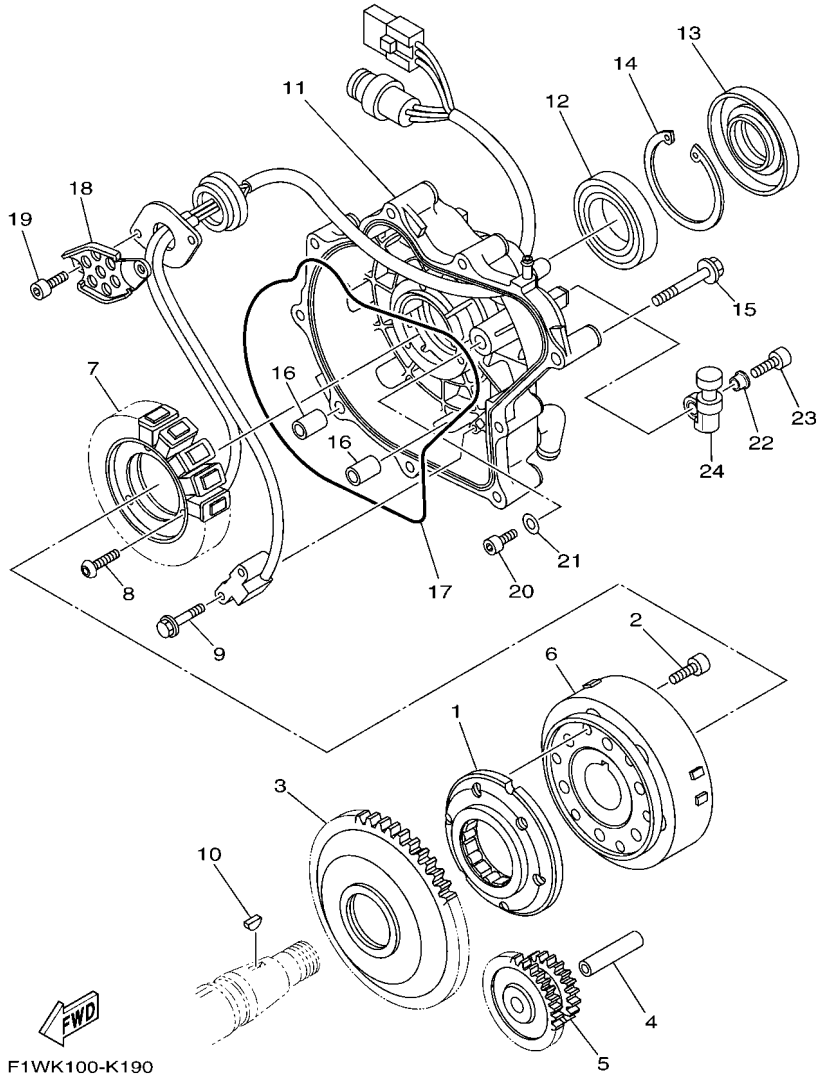

FIG. 18 GENERATOR

REF. NO.	PART NO.	DESCRIPTION	F2TP	F2TR				REMARKS
1	6S5–15590–00	STARTER ONE-WAY ASSY	1	1				
2	90110–08212	BOLT, HEXAGON SOCKET HEAD	6	6				
3	6S5–15515–00	GEAR 3	1	1				
4	6S5–15521–00	SHAFT 1	1	1				
5	6S5–15517–00	GEAR, IDLER 2	1	1				
6	6S5–81450–01	ROTOR ASSY	1	1				
7	6S5–81410–11	STATOR ASSY	1	1				
8	90149–06229	SCREW	3	3				
9	97513–05514	BOLT, WITH WASHER	2	2				
10	90280–03047	KEY, WOODRUFF	1	1				
11	6S5–81337–20	COVER, FLYWHEEL	1	1				
12	93306–00809	BEARING	1	1				
13	6S5–81167–10	OIL SEAL	1	1				
14	99009–72500	CIRCLIP	1	1				
15	90105–08249	BOLT, FLANGE	9	9				
16	99530–10114	PIN, DOWEL	2	2				
17	6S5–81168–00	O-RING	1	1				
18	6S5–81328–00	CLAMP	1	1				
19	91317–06014	BOLT,HEX.SOCKET HEAD	2	2				
20	91317–05010	BOLT,HEX.SOCKET HEAD	1	1				
21	90201–052E8	WASHER, PLATE	1	1				
22	90387–06M05	COLLAR	2	2				
23	91380–06020	BOLT	2	2				
24	6S5–81364–10	GROMMET	2	2				

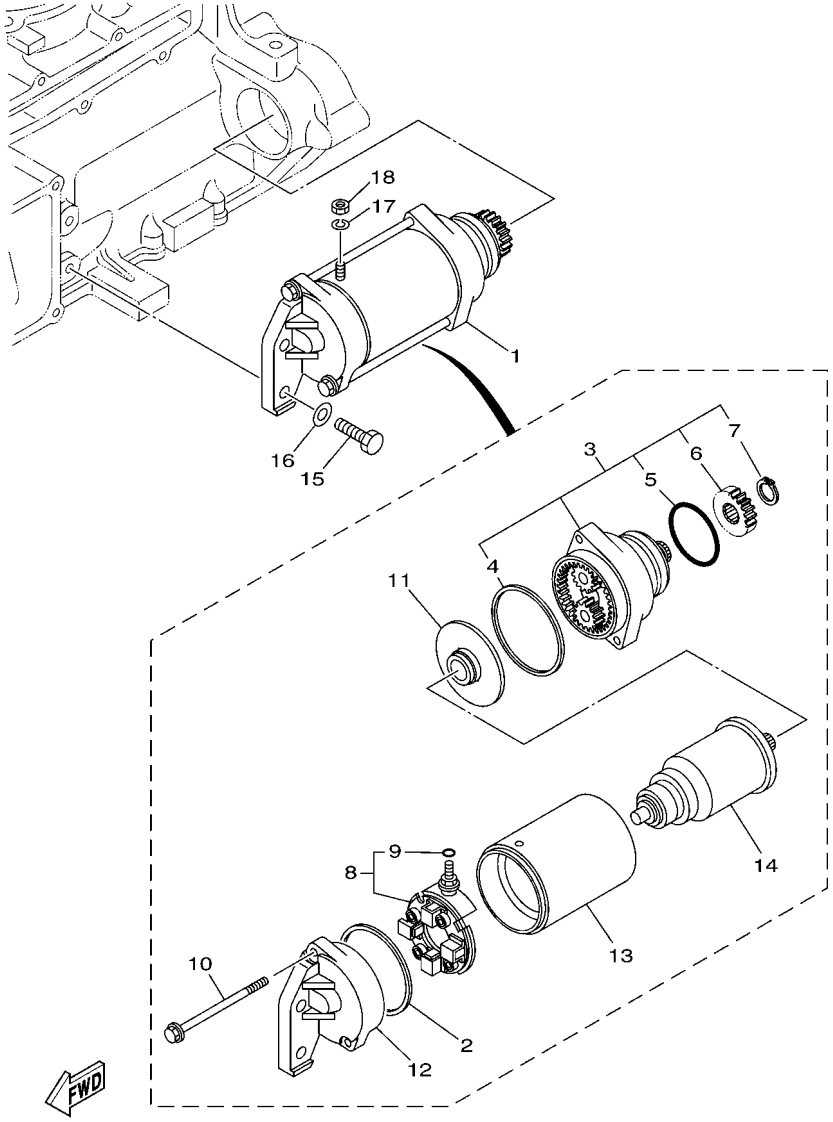

F1W1100-G200

FIG. 19 STARTING MOTOR

REF. NO.	PART NO.	DESCRIPTION	F2TP	F2TR				REMARKS
1	6S5–81800–00	STARTING MOTOR ASSY	1	1				
2	11H–81844–00	.GASKET	1	1				
3	6S5–81830–00	.FRONT BRACKET ASSY	1	1				
4	4G0–81844–00	..GASKET	1	1				
5	1J7–81847–60	..O-RING	1	1				
6	5EL–15511–00	..GEAR, STARTING MOTOR	1	1				
7	93410–12003	..CIRCLIP	1	1				
8	6S5–81840–00	.BRUSH HOLDER ASSY	1	1				
9	3TB–81847–00	..O-RING	1	1				
10	6S5–81826–00	.BOLT	2	2				
11	5EL–81845–00	.PLATE	1	1				
12	6S5–81820–00	.REAR BRACKET ASSY	1	1				
13	6S5–81810–00	.STATOR ASSY	1	1				
14	5A8–81850–10	.ARMATURE ASSY	1	1				
15	97013–08030	BOLT	2	2				
16	92903–08600	WASHER, PLATE	2	2				
17	92990–06100	WASHER, SPRING	1	1				
18	95380–06700	NUT	1	1				

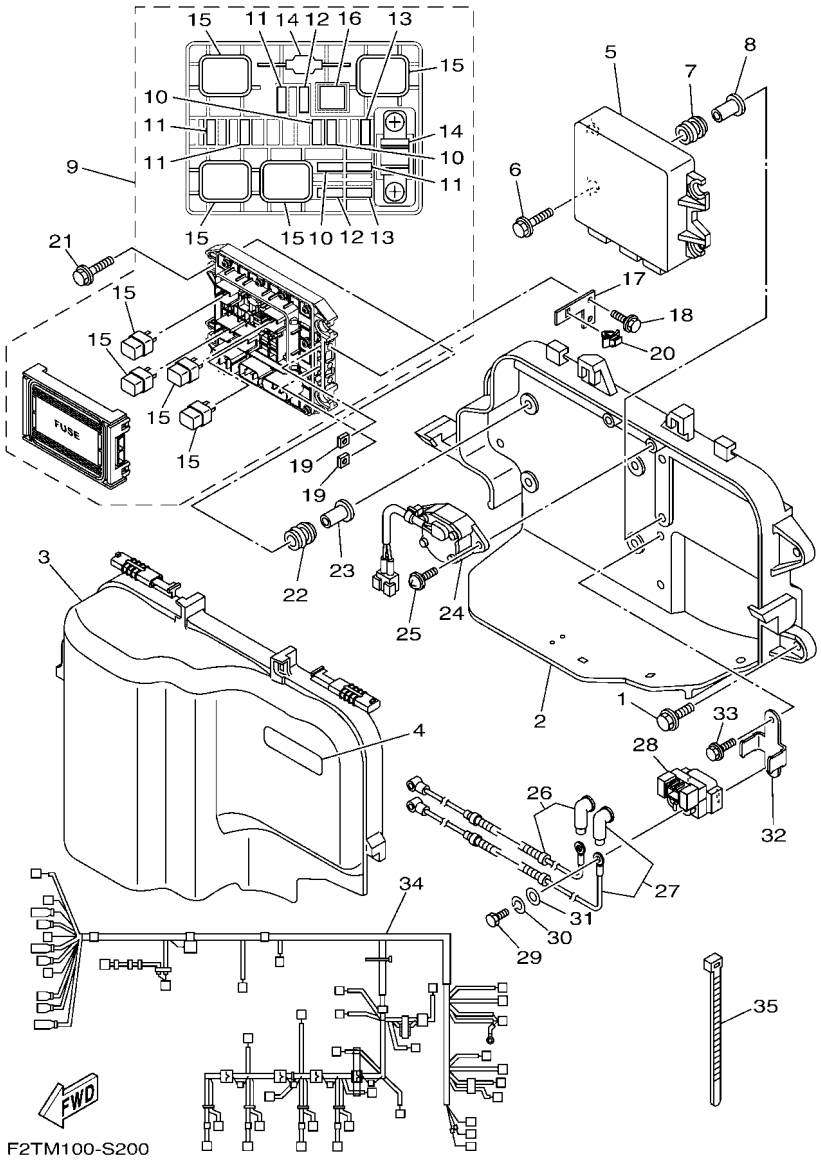

FIG. 20 ELECTRICAL 1

REF. NO.	PART NO.	DESCRIPTION	F2TP	F2TR				REMARKS
1	90119–089UT	BOLT, WITH WASHER	4	4				
2	6CS–81845–00	PLATE	1	1				
3	6S5–81942–11	COVER	1	1				
4	60E–83627–00	LABEL, CAUTION 7	1	1				
5	6CR–8591A–24	ENGINE CONTROL UNIT ASSY	1	1				
6	90119–06M35	BOLT, WITH WASHER	4	4				
7	6A0–82317–00	DAMPER, IGNITION COIL	4	4				
8	90387–06119	COLLAR	4	4				
9	6EX–82170–01	FUSE BOX ASSY	1	1				
10	67F–82151–30	.FUSE (3A)	3	3				
11	67F–82151–40	.FUSE (10A)	4	4				
12	67F–82151–00	.FUSE (20A)	2	2				
13	67F–82151–10	.FUSE (30A)	2	2				
14	6EX–82151–00	.FUSE (50A)	2	2				
15	6EX–8195A–00	.RELAY ASSY	4	4				
16	6EX–2812A–00	.PULLER, FUSE	1	1				
17	6CS–82588–00	PLATE	1	1				
18	97595–06514	BOLT, WITH WASHER	2	2				
19	90173–06015	NUT, SQUARE	2	2				
20	90464–09M47	CLAMP	1	1				
21	90119–06M35	BOLT, WITH WASHER	4	4				
22	6A0–82317–00	DAMPER, IGNITION COIL	4	4				
23	90387–06119	COLLAR	4	4				
24	6S5–8259E–00	SWITCH ASSY	1	1				
25	97780–60520	SCREW, TAPPING	2	2				
26	6CS–82115–00	WIRE, PLUS LEAD	1	1				
27	6CS–82117–00	WIRE, LEAD	1	1				

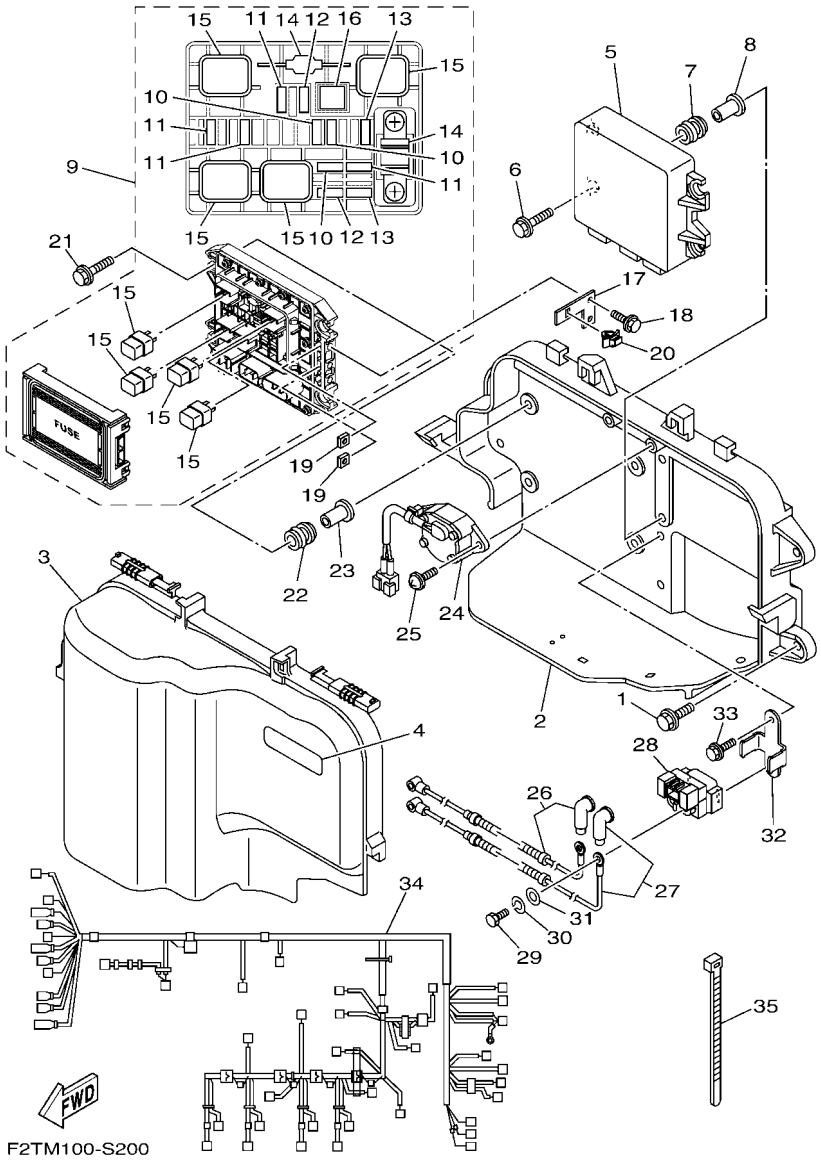

FIG. 20 ELECTRICAL 1

REF. NO.	PART NO.	DESCRIPTION	F2TP	F2TR				REMARKS
28	1B7–81940–00	STARTER RELAY ASSY (2768102-A)	1	1				
29	97095–06012	BOLT	2	2				
30	92995–06100	WASHER, SPRING	2	2				
31	92995–06600	WASHER	2	2				
32	6CS–81953–00	STAY, RELAY	1	1				
33	95814–06012	BOLT, FLANGE	2	2				
34	6CR–8259L–20	WIRE HARNESS ASSY 1	1	1				
35	90465–14M66	CLAMP	2	2				

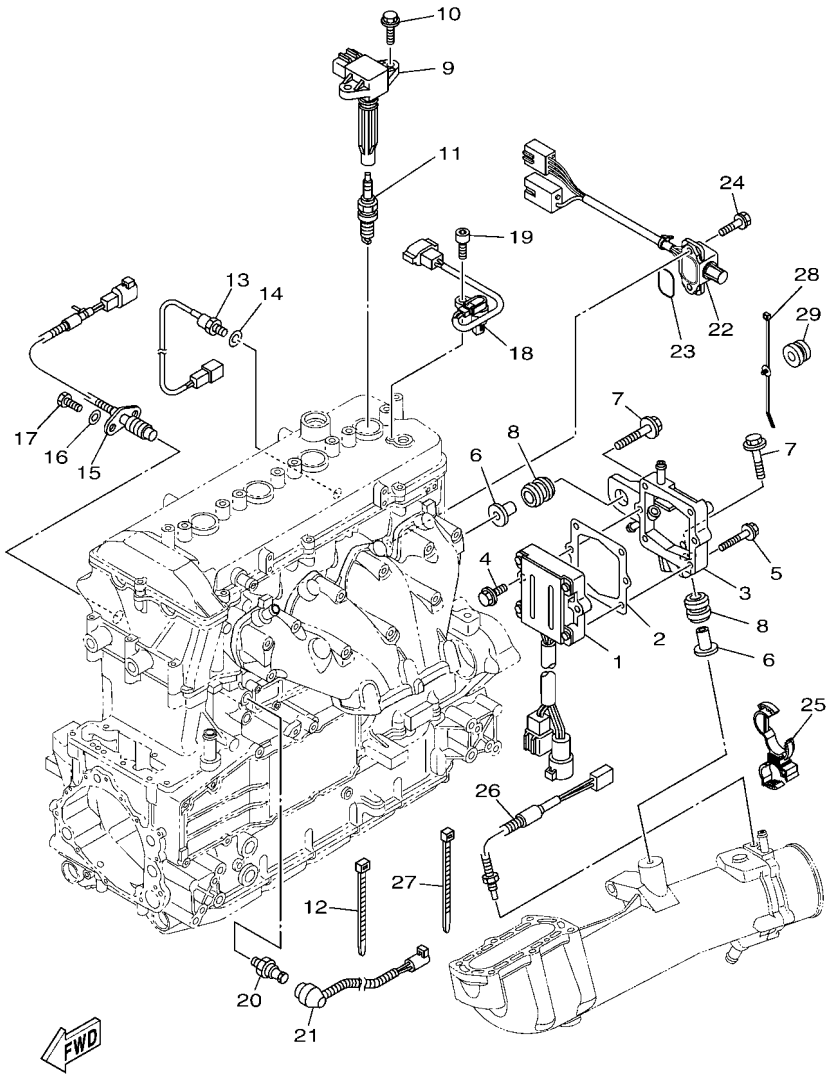

F2TM100-S210

FIG. 21 ELECTRICAL 2

REF. NO.	PART NO.	DESCRIPTION	F2TP	F2TR				REMARKS
1	6S5–81960–11	RECTIFIER & REGULATOR ASSY	1	1				
2	6S5–81975–00	PLATE, RECTIFIER FITTING	1	1				
3	6S5–81972–01–94	COVER, RECTIFIER	1	1				
4	90119–06MA3	BOLT, WITH WASHER	2	2				
5	90119–06048	BOLT, WITH WASHER	4	4				
6	90387–08M37	COLLAR	2	2				
7	90119–08M22	BOLT, WITH WASHER	2	2				
8	90480–22M15	GROMMET	2	2				
9	6S5–82310–00	IGNITION COIL ASSY	4	4				
10	90105–06903	BOLT, FLANGE	8	8				
11	94702–00427	PLUG, SPARK (NGK LFR6A)	4	4				
12	90465–13M18	CLAMP	8	8				
13	61A–85790–00	THERMOSENSOR ASSY	1	1				
14	92990–10600	WASHER, PLATE	1	1				
15	6CR–82560–00	THERMO SWITCH ASSY	1	1				
16	97095–06016	BOLT	2	2				
17	92995–06600	WASHER	2	2				
18	60E–85896–01	SENSOR, CAM POSITION	1	1				
19	91380–06016	BOLT	1	1				
20	68V–82504–00	OIL PRESSURE SWITCH ASSY	1	1				
21	6S5–81315–00	LEAD WIRE ASSY	1	1				
22	6CS–8273J–10	EARTH PLATE COMP.	1	1				
23	93210–32172	O-RING	1	1				
24	90119–06MA3	BOLT, WITH WASHER	2	2				
25	90464–20008	CLAMP	1	1				
26	6AA–85790–00	THERMOSENSOR ASSY	1	1				
27	90464–31001	CLAMP	1	1				

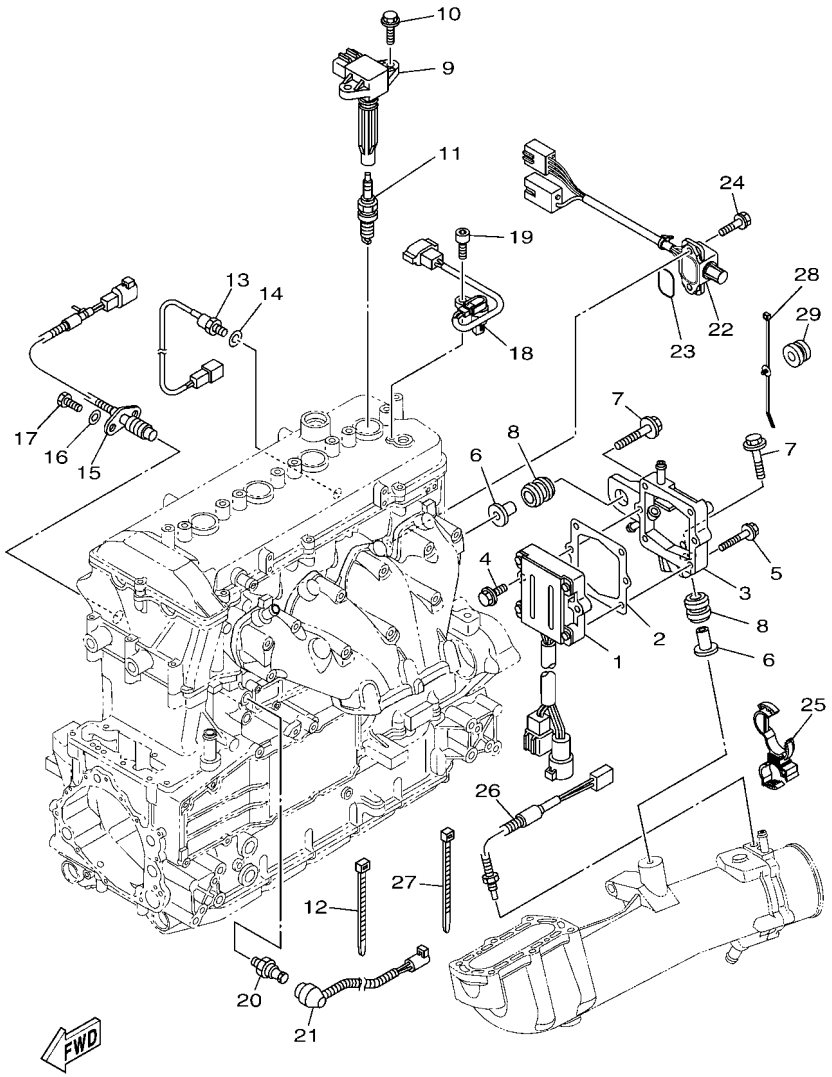

F2TM100-S210

FIG. 21 ELECTRICAL 2

REF. NO.	PART NO.	DESCRIPTION	F2TP	F2TR				REMARKS
28	90464–31002	CLAMP	1	1				
29	90480–20132	GROMMET	1	1				

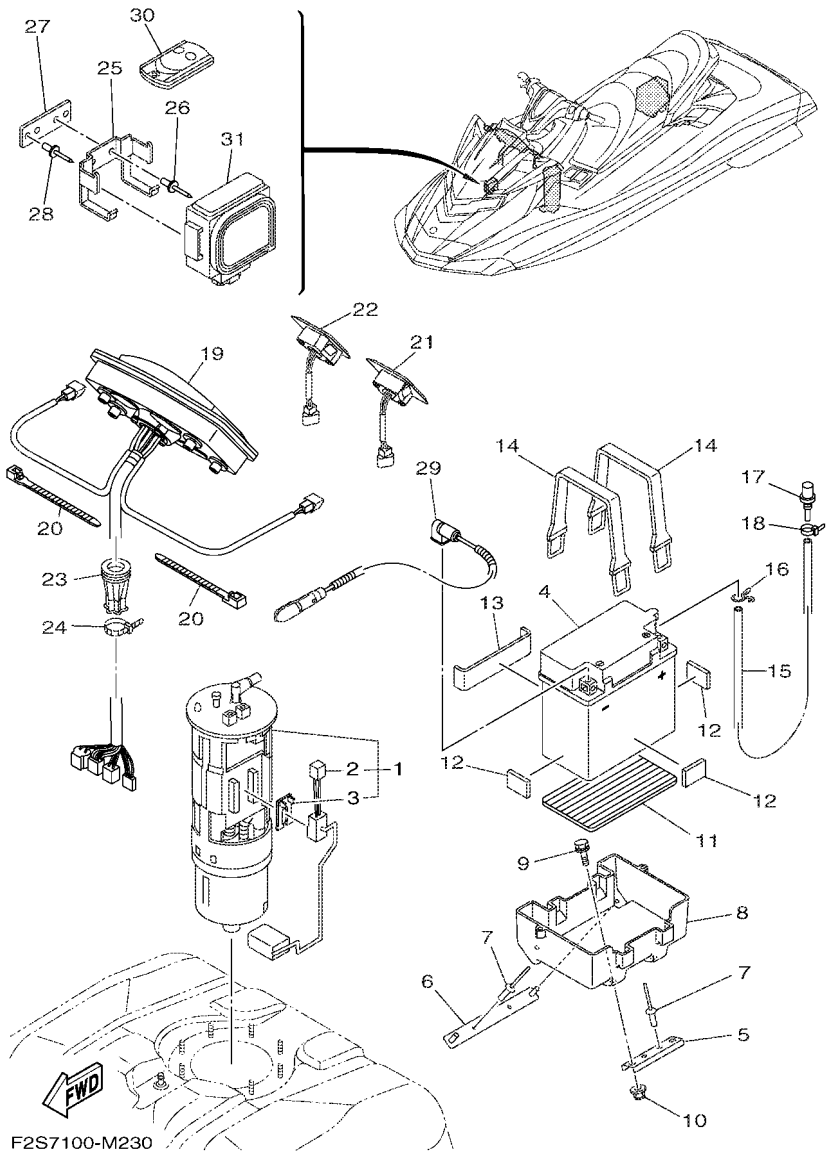

FIG. 22 ELECTRICAL 3

REF. NO.	PART NO.	DESCRIPTION	F2TP	F2TR				REMARKS
1	6S5–13907–02	FUEL PUMP COMP.	1	1				
2	6S5–682E0–00	.FUEL SENDER ASSY	1	1				
3	60E–82556–00	.DAMPER, STOPPER	1	1				
4	EU0–U8217–H2	BATTERY (YB16CL-B)	1	1				
5	F2S–U8592–00	PLATE, BASE 2	1	1				
6	F2S–U8593–00	PLATE, BASE 3	1	1				
7	90267–489U1	RIVET,BLIND	4	4				
8	F2S–U8211–00	CASE, BATTERY	1	1				
9	90119–06832	BOLT, WITH WASHER	2	2				
10	F2N–U142L–00	NUT, LOCK	2	2				
11	F1S–U8221–00	PAD, BATTERY	1	1				
12	EU0–U8221–30	PAD, BATTERY 2	3	3				
13	F1K–U8221–00	PAD, BATTERY	1	1				
14	EU0–U821D–00	BAND,BATTERY 1	2	2				
15	F0D–U785G–10	HOSE, AIR VENT	1	1				
16	90467–089U1	CLIP	1	1				
17	GJ3–6215F–00	NIPPLE	1	1				
18	90465–11829	CLAMP	1	1				
19	F2S–6820A–31	METER ASSY	1	1				
20	90464–32801	CLAMP	4	4				
21	F2S–68090–00	SWITCH ASSY.	1	1				
22	F2S–68090–10	SWITCH ASSY.	1	1				
23	F1X–U822E–00	GROMMET	1	1				
24	90464–32801	CLAMP	1	1				
25	F1W–U826C–00	BRACKET	1	1				
26	90267–489U1	RIVET,BLIND	2	2				
27	F1W–U8376–00	PLATE	1	1				

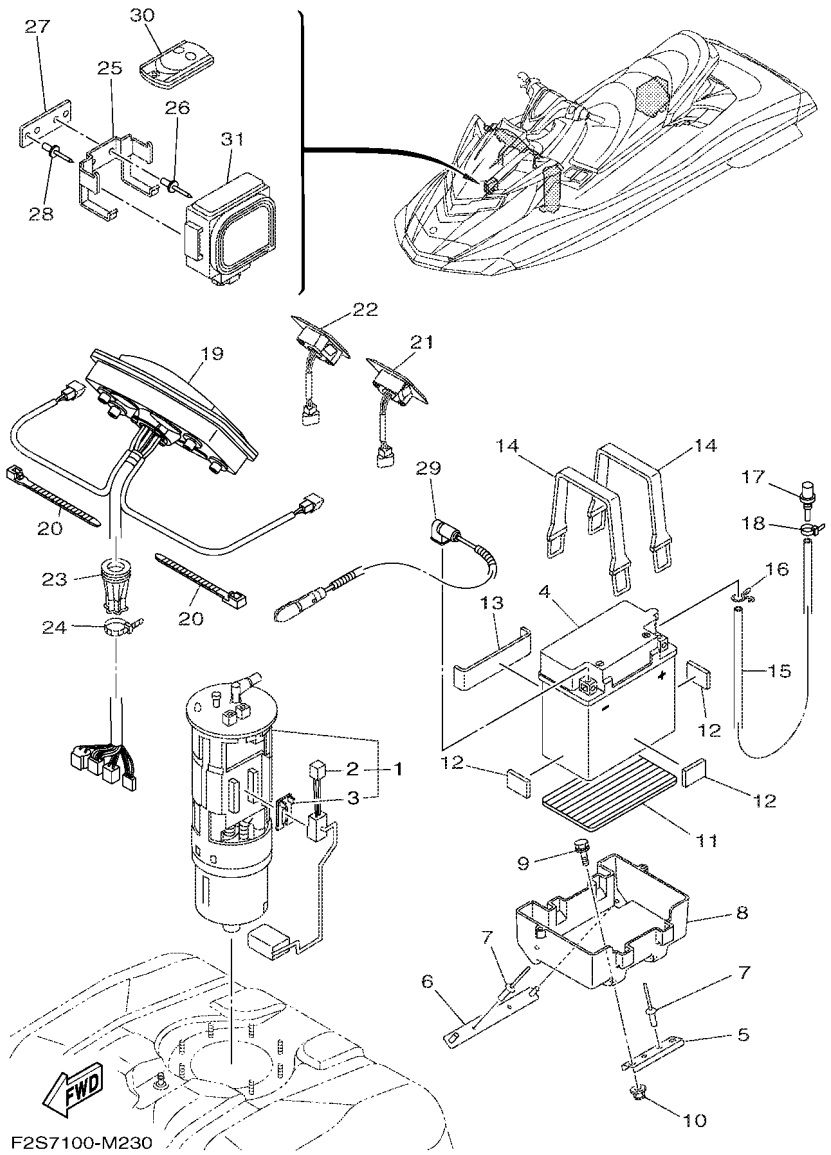

FIG. 22 ELECTRICAL 3

REF. NO.	PART NO.	DESCRIPTION	F2TP	F2TR				REMARKS
28	90267–489U1	RIVET,BLIND	2	2				
29	6S5–82116–00	WIRE, MINUS LEAD	1	1				
30	6B6–86261–00	XMTR. COMP.	1					FOR CAN
	6B6–86261–10	XMTR. COMP.		2				FOR EUR
31	6B6–86265–00	RECEIVER COMPLETE	1					FOR CAN
	6B6–86265–10	RECEIVER COMPLETE		1				FOR EUR

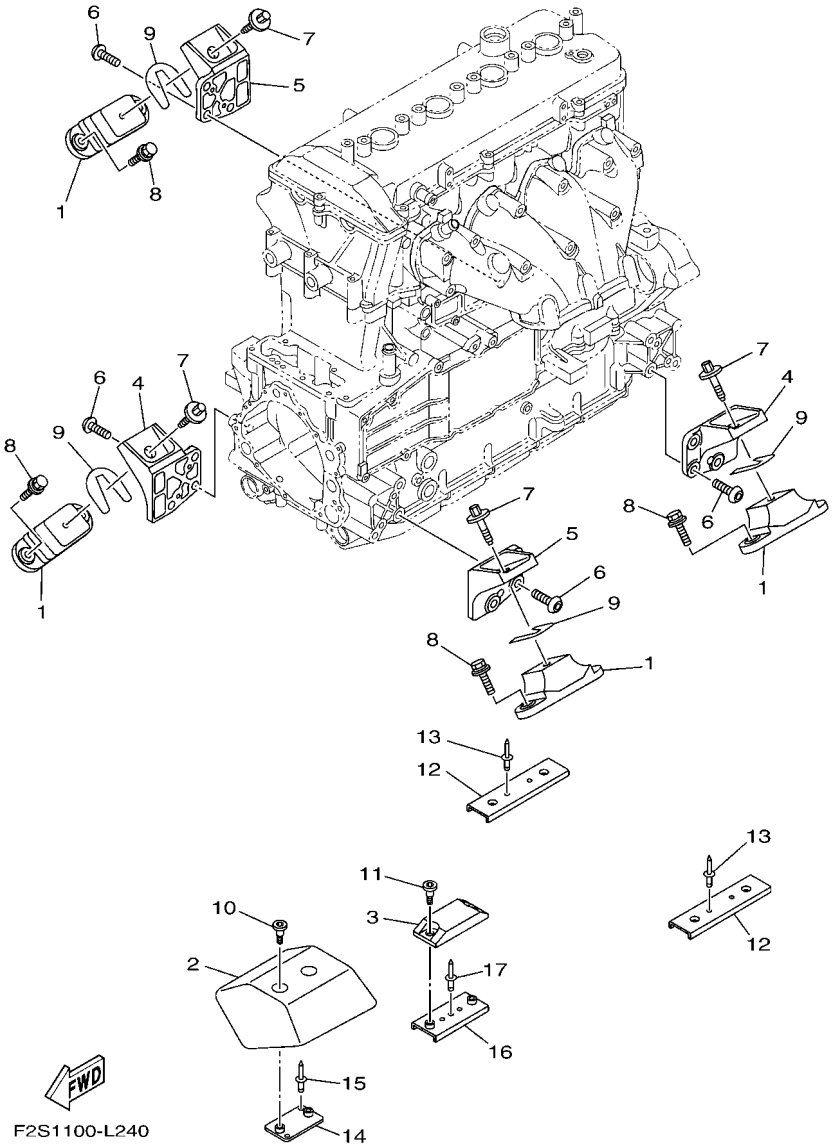

FIG. 23 ENGINE MOUNT

REF. NO.	PART NO.	DESCRIPTION	F2TP	F2TR				REMARKS
1	67X–44517–10	MOUNT RUBBER	4	4				
2	6BH–G4532–00	STOPPER, UPPER MOUNT	1	1				
3	6BH–G4574–00	STOPPER, LOWER MOUNT RUBBER	1	1				
4	6BH–41661–00–94	BRACKET 1	2	2				
5	6BH–41662–00–94	BRACKET 2	2	2				
6	90149–10052	SCREW	12	12				
7	90119–08859	BOLT, WITH WASHER	4	4				
8	90119–08823	BOLT, WITH WASHER	8	8				
9	EU0–U7354–00–01	SHIM (T=0.1)	10	10				UN
	EU0–U7354–00–03	SHIM (T=0.3)	10	10				UN
	EU0–U7354–00–05	SHIM (T=0.5)	10	10				UN
	EU0–U7354–00–10	SHIM (T=1.0)	10	10				UN
	EU0–U7354–00–20	SHIM (T=2.0)	10	10				UN
10	90109–06874	BOLT	2	2				
11	90109–06875	BOLT	2	2				
12	F2S–U732B–00	PLATE	2	2				
13	90267–489U2	RIVET, BLIND	4	4				
14	F2S–U732B–10	PLATE	1	1				
15	90267–489U2	RIVET, BLIND	2	2				
16	F2M–U732B–00	PLATE	1	1				
17	90267–489U2	RIVET, BLIND	1	1				

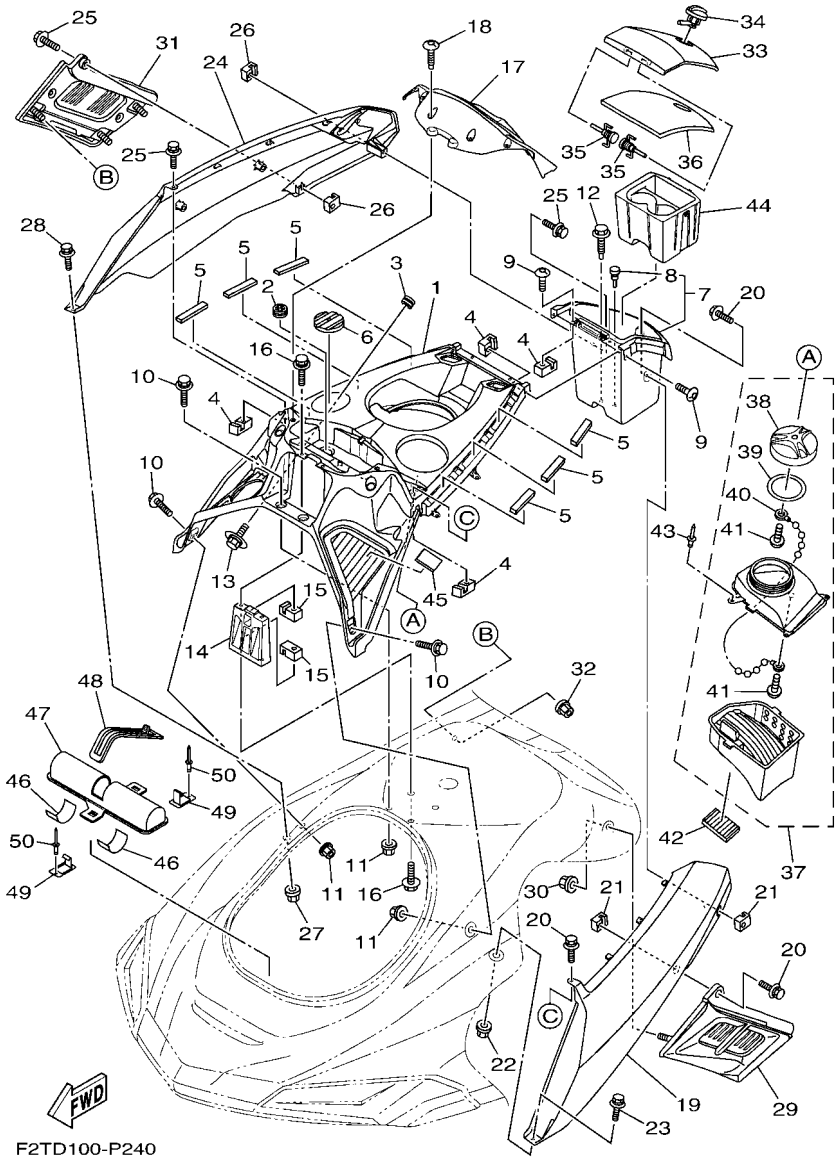

FIG. 24 ENGINE HATCH 1

REF. NO.	PART NO.	DESCRIPTION	F2TP	F2TR				REMARKS
1	F2S–U5554–02	COVER, CENTER	1	1				
2	F1X–U828E–01	DAMPER 1	2	2				
3	90480–19800	GROMMET	4	4				
4	F1X–U517E–01	NUT	6	6				
5	F0X–U515E–01	DAMPER 2	6	6				
6	F2S–U3844–00	MAT	1	1				
7	F2S–U1708–02	GLOVE BOX HATCH ASSY.	1	1				
8	90605–502U2	.PLUG	1	1				
9	F2N–67823–10	SCREW	4	4				
10	90119–06880	BOLT, WITH WASHER	4	4				
11	F2N–U142L–00	NUT, LOCK	4	4				
12	90119–068B8	BOLT, WITH WASHER	1	1				
13	90119–05803	BOLT, WITH WASHER	4	4				
14	F2S–U517F–00	HOOK,LID LOCK	1	1				
15	F1X–U517E–01	NUT	4	4				
16	90119–06880	BOLT, WITH WASHER	4	4				
17	F2S–U8262–01–P0	COVER METER (BMG)	1	1				
18	F2S–U13C1–00	SCREW	4	4				
19	F3J–U377B–00–P8	COVER,SIDE 1 (RM9)	1	1				
20	90119–06880	BOLT, WITH WASHER	3	3				
21	F1X–U517E–01	NUT	2	2				
22	F2N–U142L–00	NUT, LOCK	1	1				
23	90119–06880	BOLT, WITH WASHER	1	1				
24	F3J–U377C–00–P8	COVER,SIDE 2 (RM9)	1	1				
25	90119–06880	BOLT, WITH WASHER	3	3				
26	F1X–U517E–01	NUT	2	2				
27	F2N–U142L–00	NUT, LOCK	1	1				

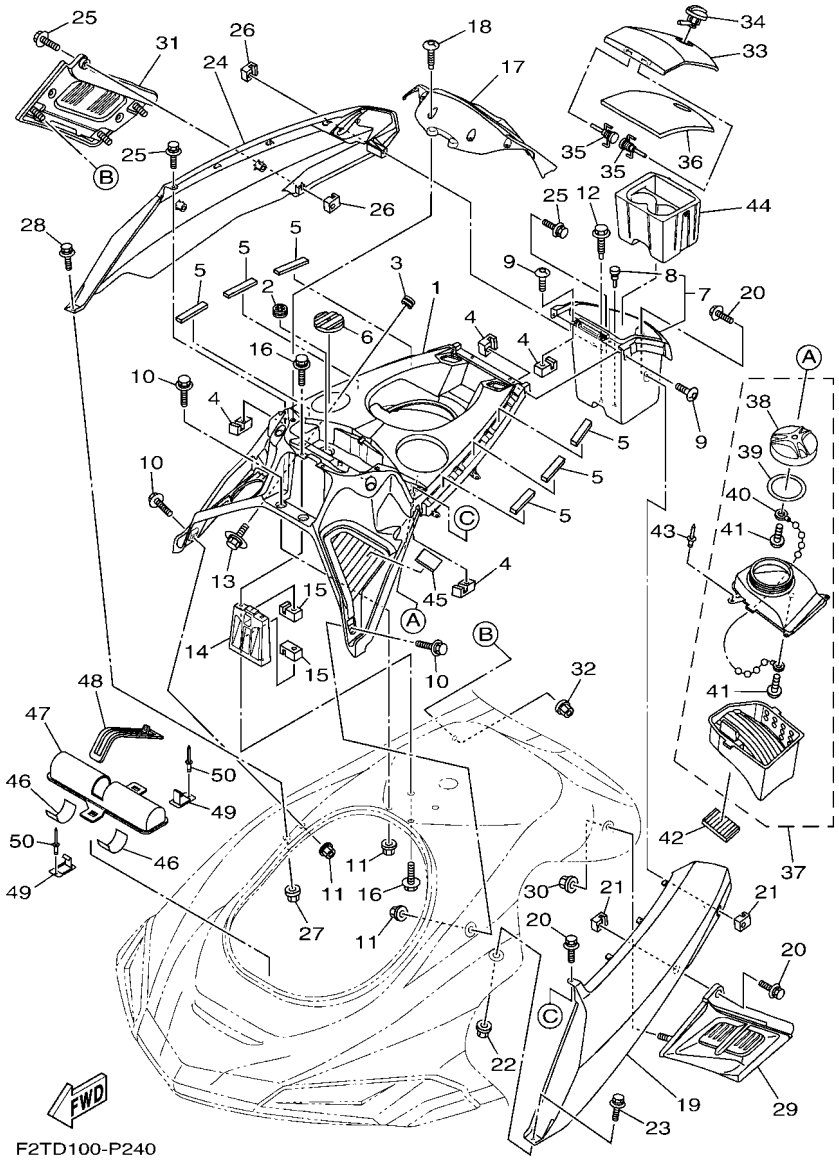

FIG. 24 ENGINE HATCH 1

REF. NO.	PART NO.	DESCRIPTION	F2TP	F2TR				REMARKS
28	90119–06880	BOLT, WITH WASHER	1	1				
29	F2S–U370J–00	SIDE ORNAMENT ASSY 1	1	1				
30	F2N–U142L–00	NUT, LOCK	3	3				
31	F2S–U370K–00	SIDE ORNAMENT ASSY 2	1	1				
32	F2N–U142L–00	NUT, LOCK	3	3				
33	F2S–U517H–00	LID HATCH	1	1				
34	F1X–62875–00	LOCK	1	1				
35	F1B–6517R–00	PIN, HINGE	2	2				
36	F2S–U519D–00	PACKING CASE	1	1				
37	F2S–U591A–00	CASE ASSY 1	1	1				
38	F1W–U591C–01	.CAP,CASE	1	1				
39	F1W–U591D–00	.PACKING,CASE	1	1				
40	F2S–U7835–01	.CHAIN BALL	1	1				
41	F2S–U316C–00	.SCREW (FL66314300)	2	2				
42	F1K–U759C–00	MAT 2	1	1				
43	90267–48807	RIVET, BLIND	3	3				
44	F2S–U5633–00	HOLDER, DRINK	1	1				
45	GJ1–U759C–00	MAT 2	1	1				
46	F1K–U759C–00	MAT 2	2	2				
47	F1K–U5983–01	BOX, FIRE EXTINGUISHER	1	1				
48	F2P–U828K–00	BAND 1	1	1				
49	F1K–U5772–04	HOOK A	2	2				
50	90267–489U1	RIVET,BLIND	2	2				

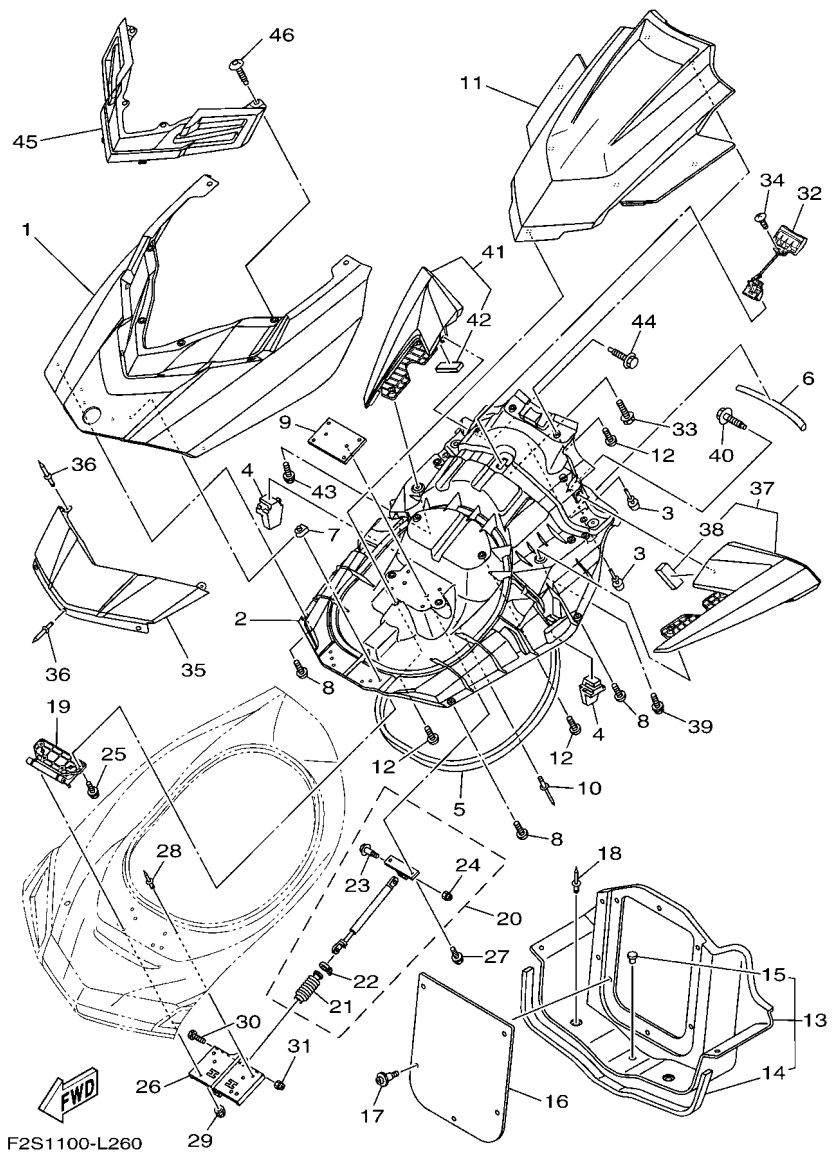

FIG. 25 ENGINE HATCH 2

REF. NO.	PART NO.	DESCRIPTION	F2TP	F2TR				REMARKS
1	F2S–U517B–01–P8	LID, ENGINE ROOM (RM9)	1	1				
2	F2S–U519G–02	INNER, ENGINE HATCH	1	1				
3	F1W–U3768–01	CUSHION, RUBBER	4	4				
4	F2S–U5135–00	STOPPER, HATCH 1	2	2				
5	F2S–U2663–00	PACKING 1	1	1				
6	F2S–U266B–00	PACKING 3	1	1				
7	90183–06902	NUT, SPRING	4	4				
8	F2S–U13C1–00	SCREW	8	8				
9	F1W–U5148–00	PLATE, HATCH	1	1				
10	90267–48807	RIVET, BLIND	4	4				
11	F2S–U515N–01–P7	VISOR (PURW)	1	1				
12	F2S–U13C1–00	SCREW	7	7				
13	F2S–U475B–00	LOCKER,BOW	1	1				
14	F2N–U266C–01	.PACKING 4	1	1				
15	90605–502U1	.PLUG, BLIND	1	1				
16	F2S–U475F–00	PLATE, LOKER BOW	1	1				
17	90269–08801	RIVET	5	5				
18	90269–08801	RIVET	4	4				
19	F2S–U517D–00	HINGE, LID	1	1				
20	F2S–6514S–00	DAMPER ASSY	1	1				
21	F1W–6514T–00	.COVER, DAMPER	1	1				
22	1UA–82591–00	.BAND	1	1				
23	90109–06218	.BOLT	1	1				
24	95720–06300	.NUT, SELF-LOCKING	1	1				
25	90119–06895	BOLT, WITH WASHER	4	4				
26	F2S–U518E–00	PLATE, HINGE LID	1	1				
27	90119–069UH	BOLT, WITH WASHER	2	2				

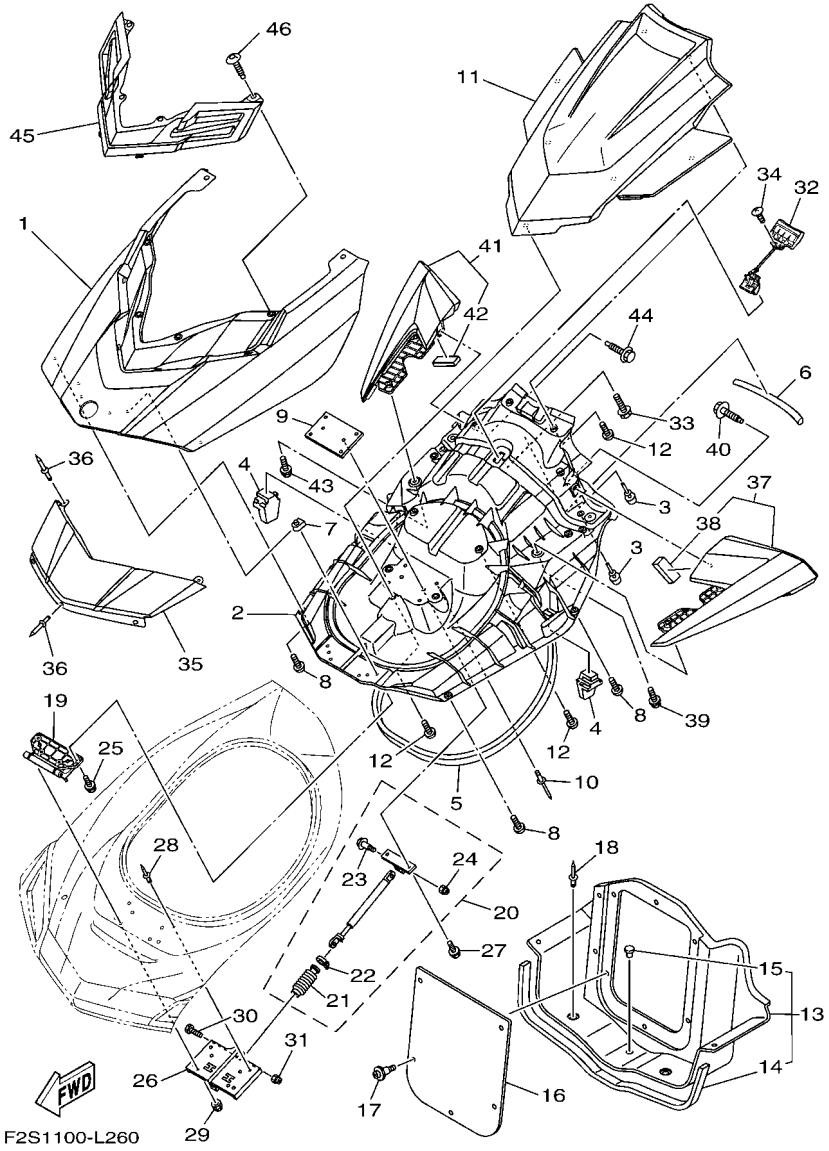

FIG. 25 ENGINE HATCH 2

REF. NO.	PART NO.	DESCRIPTION	F2TP	F2TR				REMARKS
28	90267–48020	RIVET, BLIND	2	2				
29	9572R–06300	NUT, NYLON	4	4				
30	90109–06218	BOLT	1	1				
31	9572R–06300	NUT, NYLON	1	1				
32	F2S–U517C–01	LOCK, LID	1	1				
33	90119–05912	BOLT, WITH WASHER	2	2				
34	9778R–50010	SCREW, TAPPING	2	2				
35	F2S–U513M–01–P8	COVER, FRONT (RM9)	1	1				
36	90267–489U6	RIVET, BLIND	5	5				
37	F2S–U590D–71	MIRROR ASSY. 1	1	1				
38	F1K–U266B–00	.PACKING 3	1	1				
39	90119–089UL	BOLT, WITH WASHER	2	2				
40	90119–06858	BOLT, WITH WASHER	1	1				
41	F2S–U590E–71	MIRROR ASSY. 2	1	1				
42	F1K–U266B–00	.PACKING 3	1	1				
43	90119–089UL	BOLT, WITH WASHER	2	2				
44	90119–06858	BOLT, WITH WASHER	1	1				
45	F2S–U510D–01	CENTER ORNAMENT ASSY	1	1				
46	F2S–U13C1–00	SCREW	4	4				

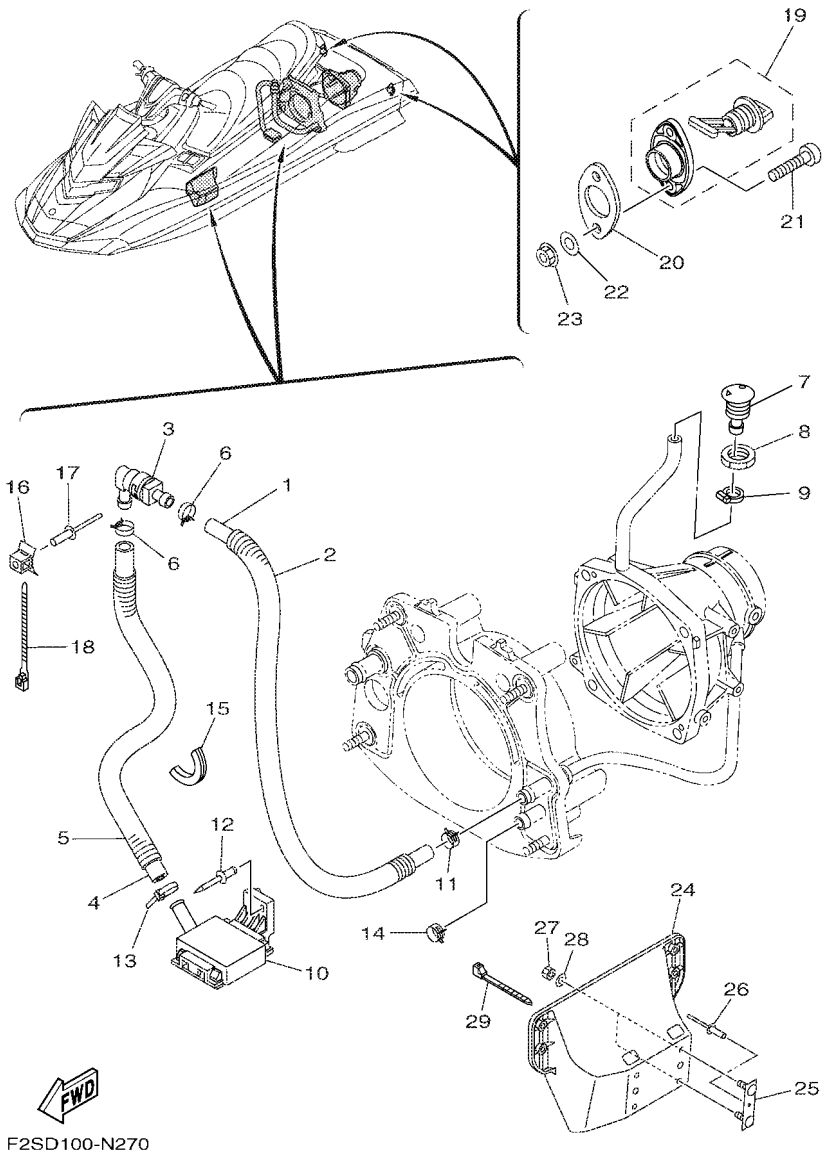

FIG. 26 HULL & DECK

REF. NO.	PART NO.	DESCRIPTION	F2TP	F2TR				REMARKS
1	90445–20804	HOSE (L860)	1	1				
2	90446–27M73	HOSE (L700)	1	1				
3	68N–5112T–00	JOINT, HOSE	1	1				
4	90445–20800	HOSE (L500)	1	1				
5	90446–27M55	TUBE (L400)	1	1				
6	90467–18804	CLIP	2	2				
7	F1W–U269B–00	SPOUT	1	1				
8	EU0–61652–00	NUT	1	1				
9	90601–118UF	BAND, HOSE 18	1	1				
10	F1B–U761D–02	STRAINER, BILGE	1	1				
11	90467–21800	CLIP	1	1				
12	90267–489U8	RIVET, BLIND	1	1				
13	90601–200U1	BAND	1	1				
14	90467–200A0	CLIP	1	1				
15	F1S–U828H–01	TRIM, 1	1	1				
16	F1W–U828M–00	BASE, CLAMP	1	1				
17	90267–48802	RIVET, BLIND	1	1				
18	90464–32801	CLAMP	1	1				
19	F1S–U2280–02	DRAIN PLUG ASSY.	2	2				
20	F1S–U2285–00	PACKING, DRAIN	2	2				
21	9788R–05025	SCREW, PAN HEAD	4	4				
22	9299R–05200	WASHER	4	4				
23	9572R–05300	NUT, FLANGE	4	4				
24	F1W–U8572–01	BRACKET 2	1	1				
25	F1K–U826C–03	BRACKET	2	2				
26	90267–489U1	RIVET,BLIND	2	2				
27	9572R–08300	NUT, FLANGE	4	4				

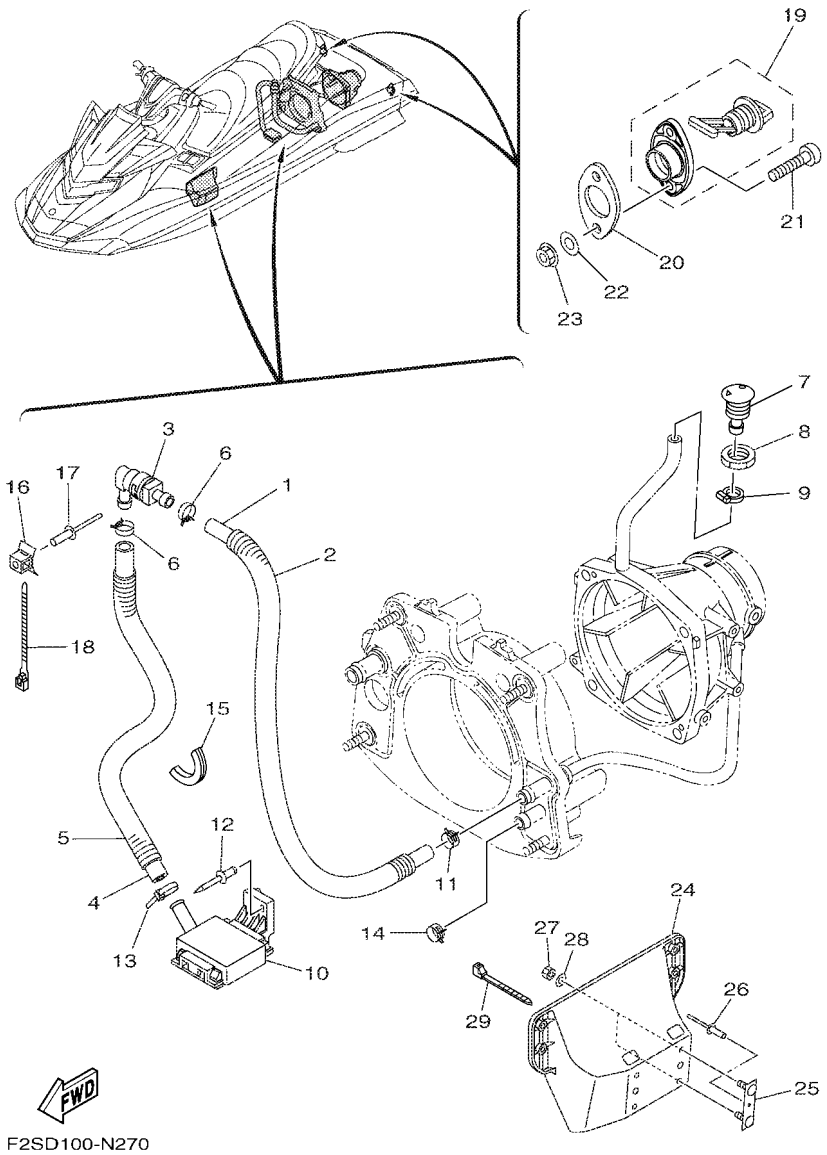

FIG. 26 HULL & DECK

REF. NO.	PART NO.	DESCRIPTION	F2TP	F2TR				REMARKS
28	9299R–08200	WASHER	4	4				
29	90464–32801	CLAMP	1	1				

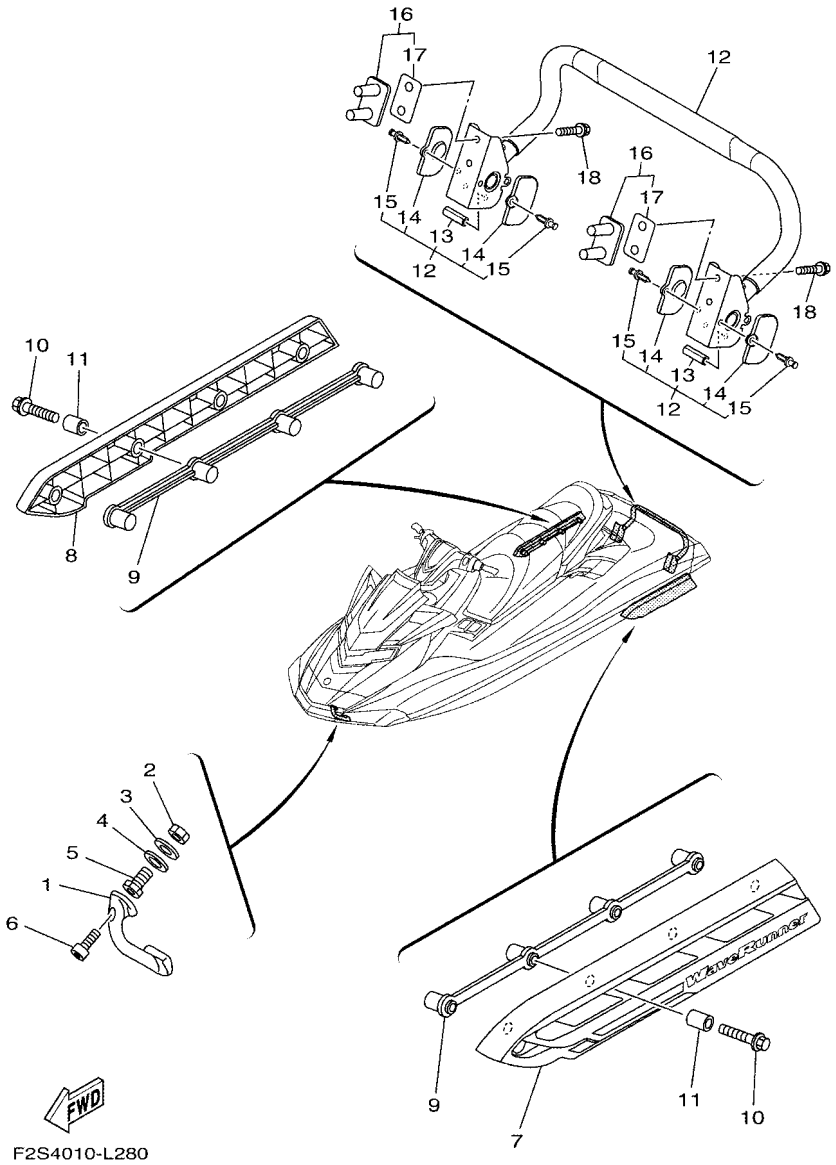

FIG. 27 HULL & DECK 2

REF. NO.	PART NO.	DESCRIPTION	F2TP	F2TR				REMARKS
1	F1K–61624–00	BOW EYE 1	1	1				
2	99780–12600	NUT.HEX.(COARS)	2	2				
3	92990–12200	WASHER, PLAIN	2	2				
4	F0X–61637–00	WASHER	2	2				
5	F0X–61652–00	NUT (BOLT/NUT)	2	2				
6	90110–06040	BOLT, HEXAGON SOCKET HEAD	2	2				
7	F2S–U883N–02	STABILIZER LH	1	1				
8	F2S–U883P–02	STABILIZER RH	1	1				
9	F2S–U883T–00	BRACKET,STABILIZER	2	2				
10	90105–08860	BOLT, FLANGE	8	8				
11	F2N–U8169–00	SPACER	8	8				
12	F2S–U278A–01	LADDER, STEP ASSY	1	1				
13	F1W–U771H–00	.SLEEVE 1	2	2				
14	F2C–U377H–00	.INNER, COVER SIDE 1	4	4				
15	F2C–U1314–00	.PIN	4	4				
16	F2S–U278F–00	BRACKET, LADDER LH	2	2				
17	F2S–U278H–00	.PACKING, BRKT. 1	1	1				
18	90119–08861	BOLT, WITH WASHER	4	4				

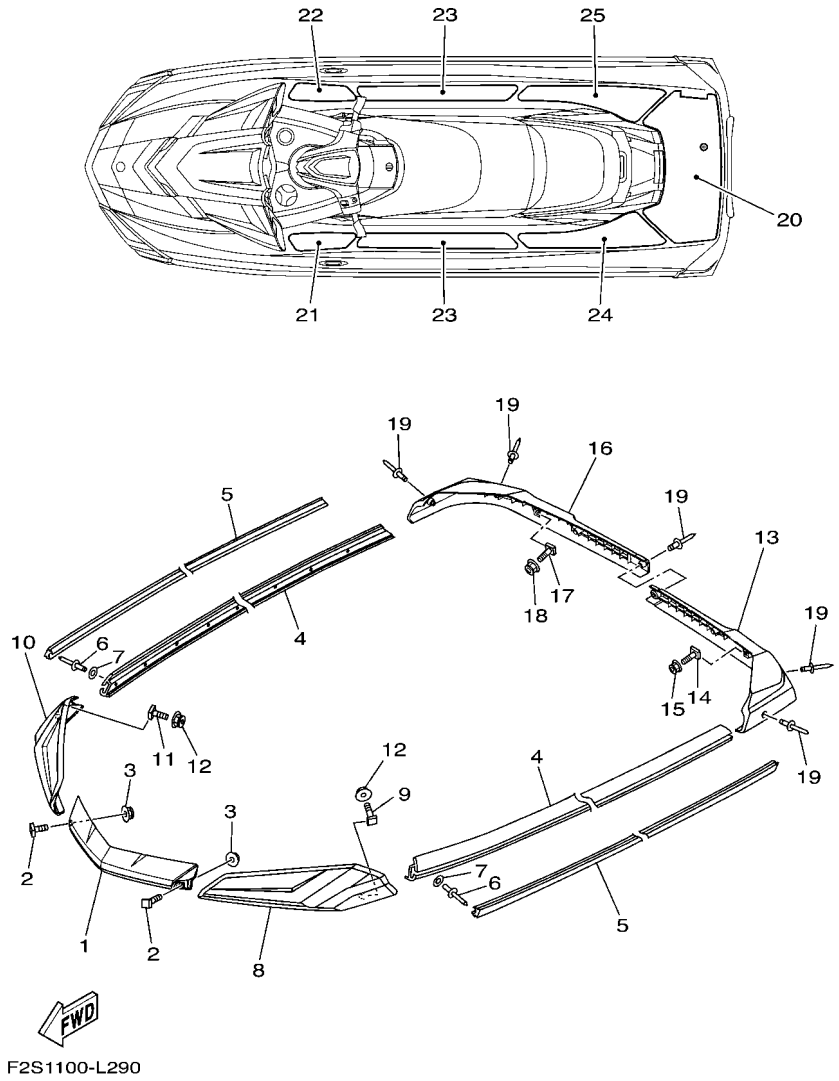

FIG. 28 GUNWALE & MAT

REF. NO.	PART NO.	DESCRIPTION	F2TP	F2TR				REMARKS
1	F2S–U2511–10	GUNWALE, BOW	1	1				YAMAHA BLACK
2	F1W–U491K–00	BOLT, SPECIAL	4	4				
3	F2N–U142L–00	NUT, LOCK	4	4				
4	F2S–U2512–10	GUNWALE, SIDE	2	2				YAMAHA BLACK
5	F2S–U2519–80	INNER,GUNWALE (RED)	2	2				
6	90267–489U8	RIVET, BLIND	30	30				
7	9299R–05200	WASHER	30	30				
8	F2S–U252E–11	JOINT, GUNWALE LH	1	1				YAMAHA BLACK
9	F1W–U491K–00	BOLT, SPECIAL	3	3				
10	F2S–U252F–11	JOINT, GUNWALE RH	1	1				YAMAHA BLACK
11	F1W–U491K–00	BOLT, SPECIAL	3	3				
12	F2N–U142L–00	NUT, LOCK	6	6				
13	F2S–U251D–10	GUNWALE, STERN 1 LH	1	1				YAMAHA BLACK
14	F1W–U491K–00	BOLT, SPECIAL	1	1				
15	F2N–U142L–00	NUT, LOCK	1	1				
16	F2S–U251E–10	GUNWALE, STERN 2 RH	1	1				YAMAHA BLACK
17	F1W–U491K–00	BOLT, SPECIAL	1	1				
18	F2N–U142L–00	NUT, LOCK	1	1				
19	90267–48825	RIVET, BLIND	7	7				
20	F2S–U3581–30	MAT, UPPER	1	1				GRAY AND BLACK
21	F2S–U351H–30	MAT, STEP 1	1	1				GRAY AND BLACK
22	F2S–U351J–30	MAT, STEP 2	1	1				GRAY AND BLACK
23	F2S–U351K–30	MAT, STEP 3	2	2				GRAY AND BLACK
24	F2S–U351M–30	MAT, STEP 4	1	1				GRAY AND BLACK
25	F2S–U351N–30	MAT, STEP 5	1	1				GRAY AND BLACK

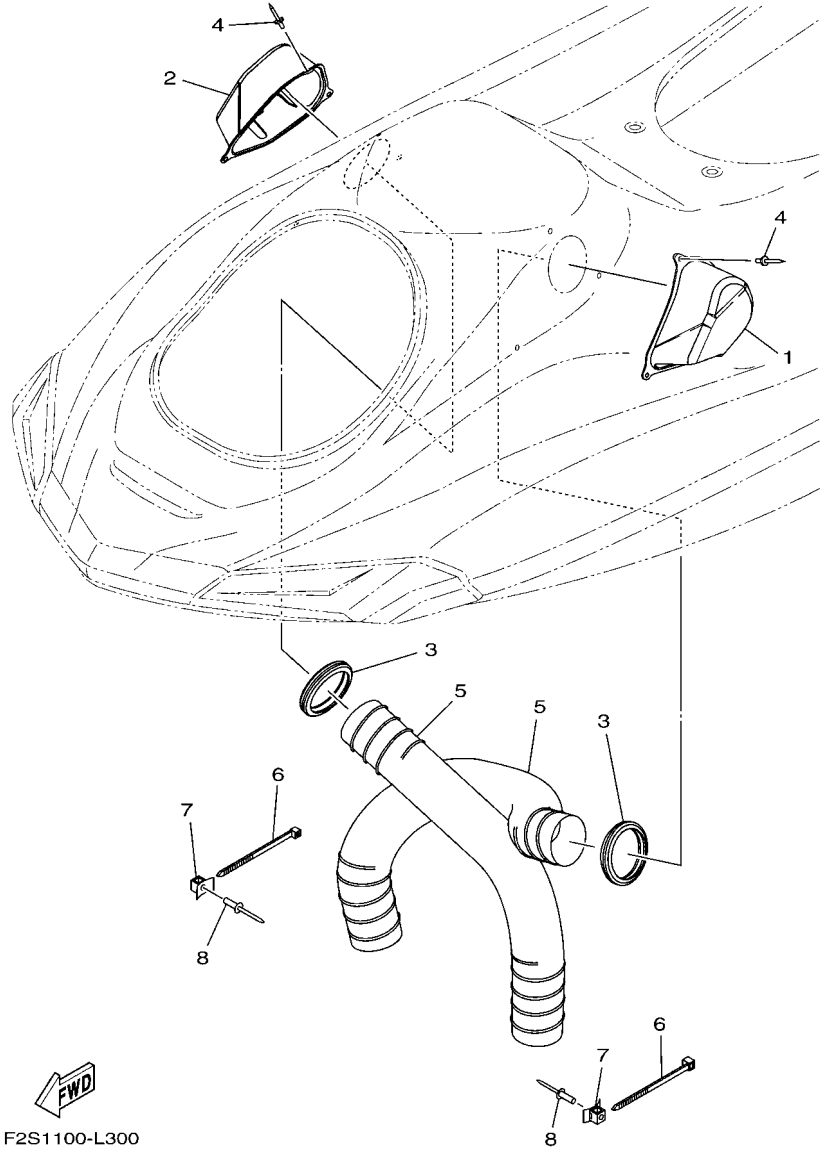

FIG. 29 VENTILATION

REF. NO.	PART NO.	DESCRIPTION	F2TP	F2TR				REMARKS
1	F2S–U2187–00	BOX, INDUCTION 1	1	1				
2	F2S–U2188–00	BOX, INDUCTION 2	1	1				
3	F2N–U2127–00	BASE, AIR INTAKE	2	2				
4	90267–48806	RIVET, BLIND	6	6				
5	F2N–U213G–01	HOSE, VENTILATOR 2	2	2				
6	90464–99804	CLAMP	2	2				
7	F1W–U828M–00	BASE, CLAMP	2	2				
8	90267–489U6	RIVET, BLIND	2	2				

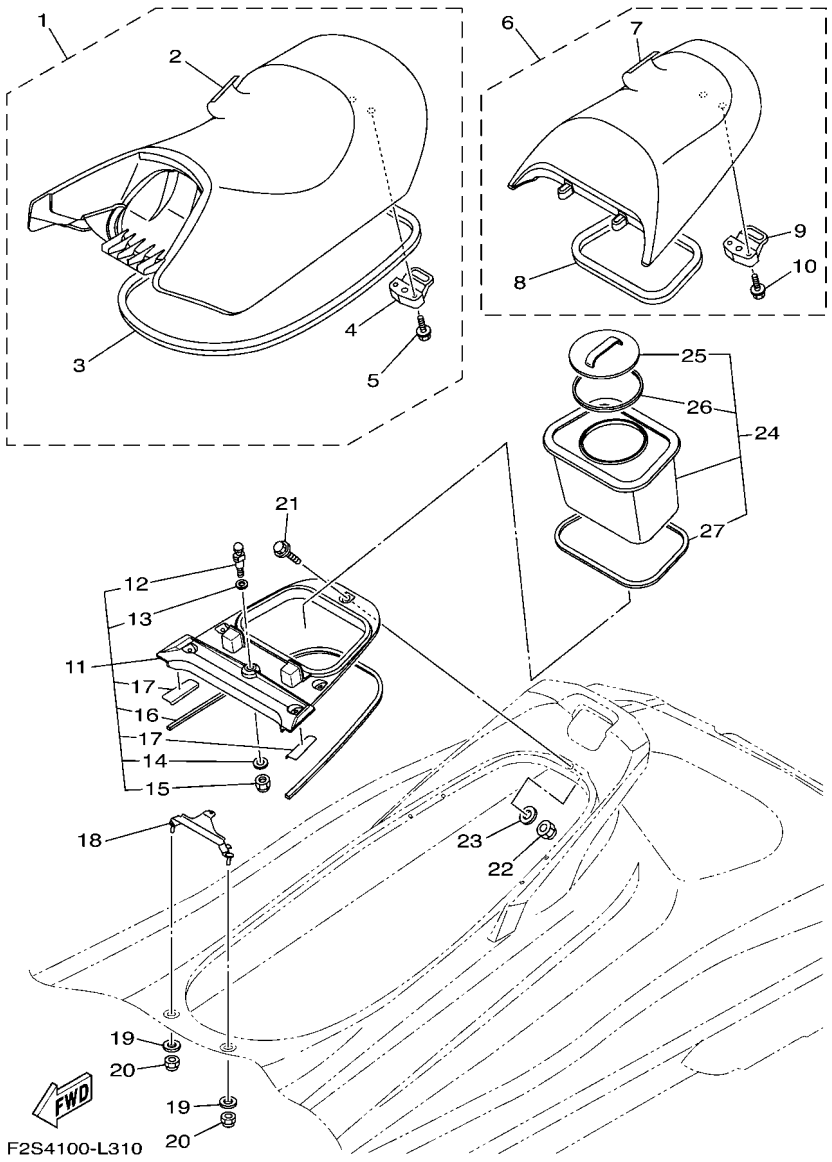

FIG. 30 SEAT & UNDER LOCKER

REF. NO.	PART NO.	DESCRIPTION	F2TP	F2TR				REMARKS
1	F2S–U371A–90	DOUBLE SEAT ASSY	1	1				
2	F2S–U371B–90	.COVER, SEAT 1	1	1				
3	F1W–U2664–01	.PACKING	1	1				
4	F2C–U3850–00	.SEAT LOCK ASSY	1	1				
5	90119–069UP	.BOLT, WITH WASHER	2	2				
6	F2S–U372A–90	SINGLE SEAT ASSY	1	1				
7	F2S–U372B–90	.COVER, SEAT	1	1				
8	F2C–U266D–01	.PACKING 5	1	1				
9	F2C–U3850–00	.SEAT LOCK ASSY	1	1				
10	90119–069UP	.BOLT, WITH WASHER	2	2				
11	F2S–U890L–04	DECK BEAM ASSY	1	1				
12	GH1–U3774–00	.PIN	1	1				
13	90201–109U6	.WASHER, PLATE	1	1				
14	9299R–10200	.WASHER	1	1				
15	9572R–10300	.NUT, NYLON	1	1				
16	F2S–U375E–00	.PACKING 1	1	1				
17	F2S–U8244–00	.PACKING	2	2				
18	F2C–U378C–00	STAY, SEAT 1	1	1				
19	90201–099U3	WASHER, PLATE	2	2				
20	9572R–08300	NUT, FLANGE	2	2				
21	90119–08828	BOLT, WITH WASHER	5	5				
22	9572R–08300	NUT, FLANGE	5	5				
23	9299R–08200	WASHER	5	5				
24	F2C–U591A–03	CASE ASSY 1	1	1				
25	F2C–U591C–00	.CAP,CASE	1	1				
26	F2C–U591D–01	.PACKING,CASE	1	1				
27	F2C–U266E–00	.PACKING,6	1	1				

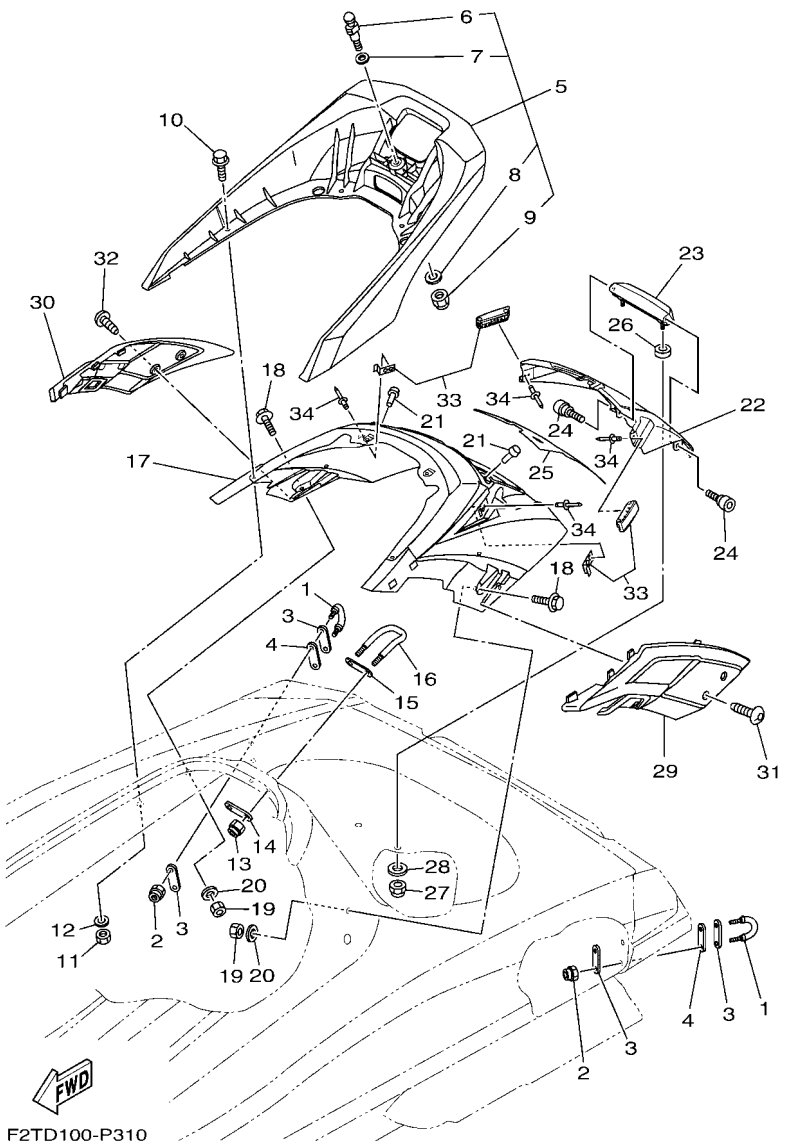

FIG. 31 SEAT & UNDER LOCKER 2

REF. NO.	PART NO.	DESCRIPTION	F2TP	F2TR				REMARKS
1	F2N–U1628–02	STERN EYE	2	2				
2	9572R–08300	NUT, FLANGE	4	4				
3	GP7–U4953–10	PLATE A	4	4				
4	F1B–U1653–02	PACKING	2	2				
5	F2S–U270B–10	GRIP ASSY	1	1				
6	GH1–U3774–00	.PIN	1	1				
7	90201–109U6	.WASHER, PLATE	1	1				
8	9299R–10200	.WASHER	1	1				
9	9572R–10300	.NUT, NYLON	1	1				
10	90119–08829	BOLT, WITH WASHER	4	4				
11	9572R–08300	NUT, FLANGE	4	4				
12	9299R–08200	WASHER	4	4				
13	9572R–08300	NUT, FLANGE	2	2				
14	GP7–U4953–10	PLATE A	1	1				
15	GP7–U4953–10	PLATE A	1	1				
16	F1B–U1629–00	SKI TOWS	1	1				
17	F2S–U89A1–01–P7	STORAGE, STERN (PURW)	1	1				
18	90119–08832	BOLT, WITH WASHER	2	2				
19	9572R–08300	NUT, FLANGE	2	2				
20	9299R–08200	WASHER	2	2				
21	F1W–U3768–01	CUSHION, RUBBER	2	2				
22	F2S–U518M–01–P7	LID LOCKER STERN (PURW)	1	1				
23	F2S–U271F–01	GRIP, LOWER	1	1				
24	F2S–U2624–00	BOLT	2	2				
25	F2S–U519D–20	PACKING CASE	1	1				
26	F2S–U2284–00	PACKING	2	2				
27	9572R–08300	NUT, FLANGE	2	2				

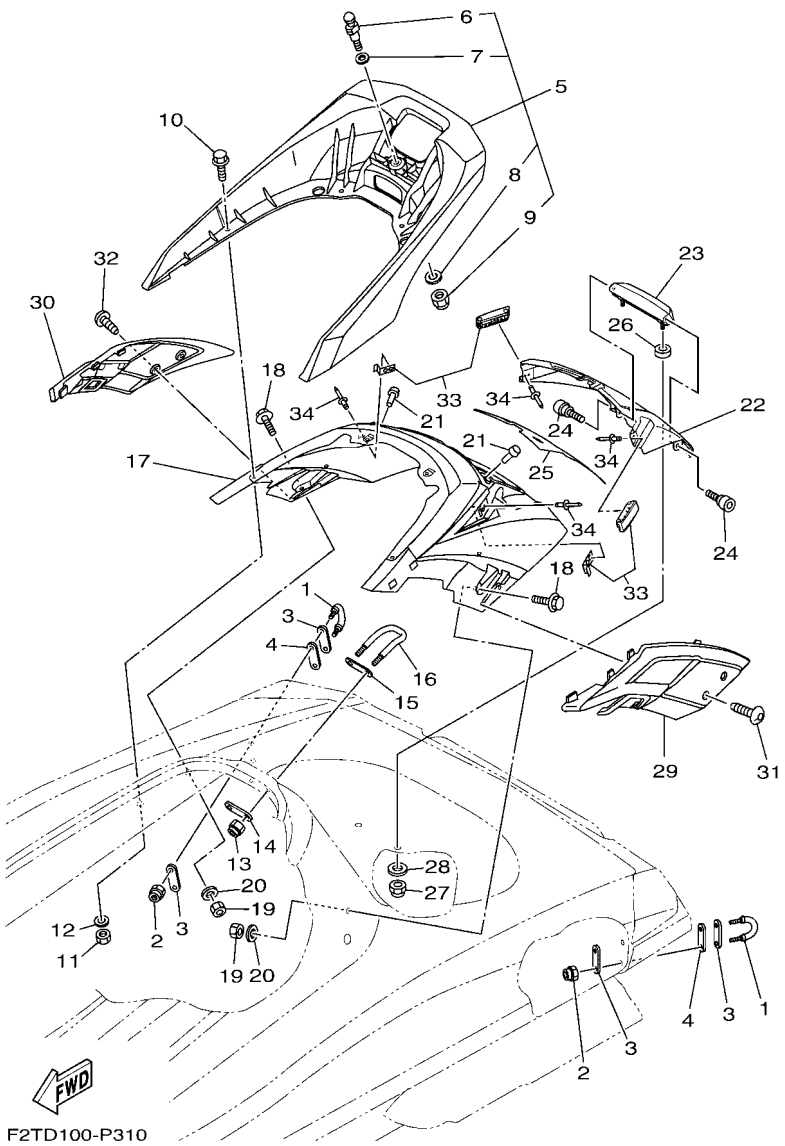

FIG. 31 SEAT & UNDER LOCKER 2

REF. NO.	PART NO.	DESCRIPTION	F2TP	F2TR				REMARKS
28	9299R–08200	WASHER	2	2				
29	F2S–U890M–11	STERN COVER ASSY 1	1	1				
30	F2S–U890N–11	STERN COVER ASSY 2	1	1				
31	F2S–U13C1–00	SCREW	2	2				
32	F2S–U13C1–00	SCREW	2	2				
33	F2S–U264L–01	LOCK 1 (WITH HOOK)	2	2				
34	90267–409U3	RIVET, BLIND	8	8				

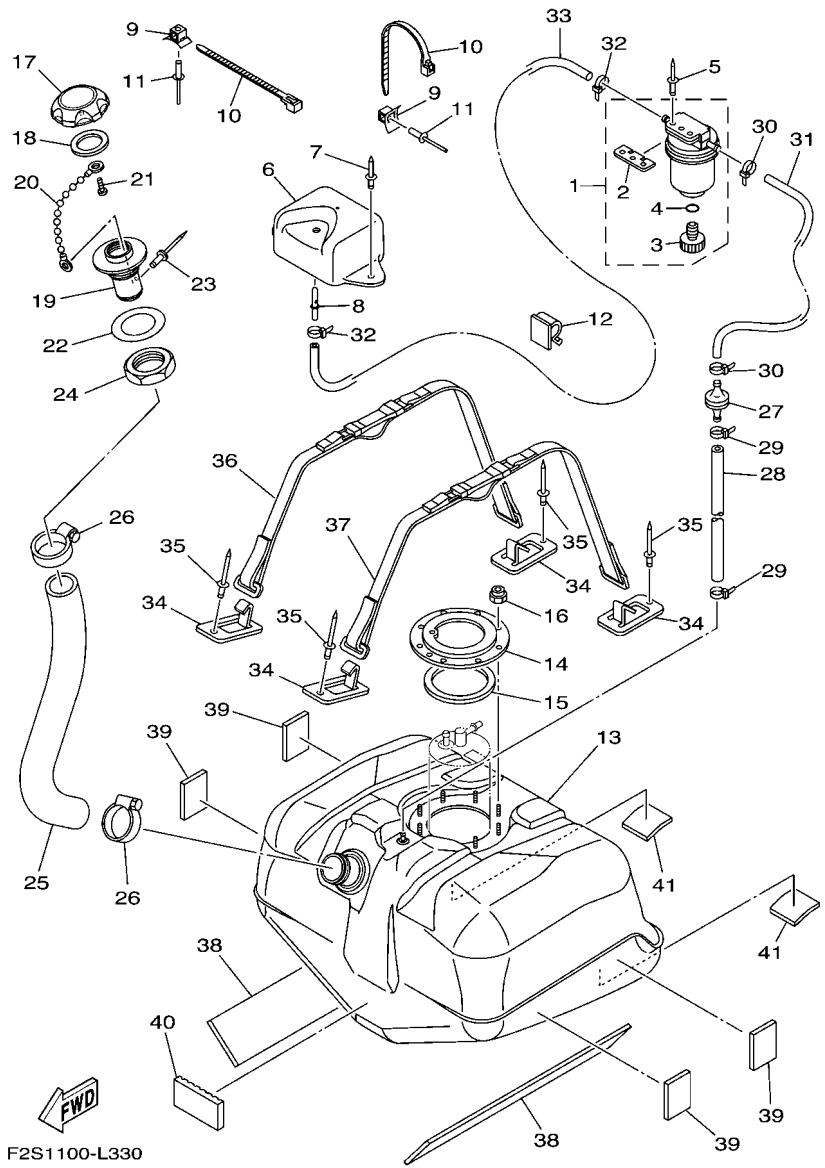

FIG. 32 FUEL TANK

REF. NO.	PART NO.	DESCRIPTION	F2TP	F2TR				REMARKS
1	F2F–6214A–00	FILTER, VENT ASSY	1	1				
2	EW2–62142–00	.PLATE, FILTER	1	1				
3	70R–24543–00	.PLUG, DRAIN	1	1				
4	70R–24489–00	.O-RING	1	1				
5	90267–489U2	RIVET, BLIND	2	2				
6	F1W–U2159–00	SOCKET, VENTILATION	1	1				
7	90267–489U6	RIVET, BLIND	2	2				
8	F1G–62149–00	PIPE, VENTILATION	1	1				
9	F1W–U828M–00	BASE, CLAMP	2	2				
10	90464–32801	CLAMP	2	2				
11	90267–489U6	RIVET, BLIND	2	2				
12	90464–17800	CLAMP	1	1				
13	F2S–U7711–02	TANK, FUEL	1	1				
14	F1B–U7773–00	RING	1	1				
15	F1B–67747–00	PACKING, SEAL	1	1				
16	9572R–06300	NUT, NYLON	9	9				
17	F2N–U7831–10	CAP, FUEL FILLER	1	1				BLACK
18	GP7–U7832–01	PACKING	1	1				
19	GP7–U7833–11	SOCKET	1	1				BLACK
20	GP7–U7835–00	CHAIN BALL	1	1				
21	90169–049U1	TAPPING SCREW	1	1				
22	GP7–U7834–10	PACKING FUEL FILLER	1	1				
23	90267–329UR	RIVET, BLIND	1	1				
24	GP7–U783F–00	NUT, FUEL FILLER	1	1				
25	F2S–U7844–00	HOSE	1	1				
26	90601–155U4	BAND, HOSE 55	2	2				
27	EU0–67767–31	CHECK VALVE	1	1				

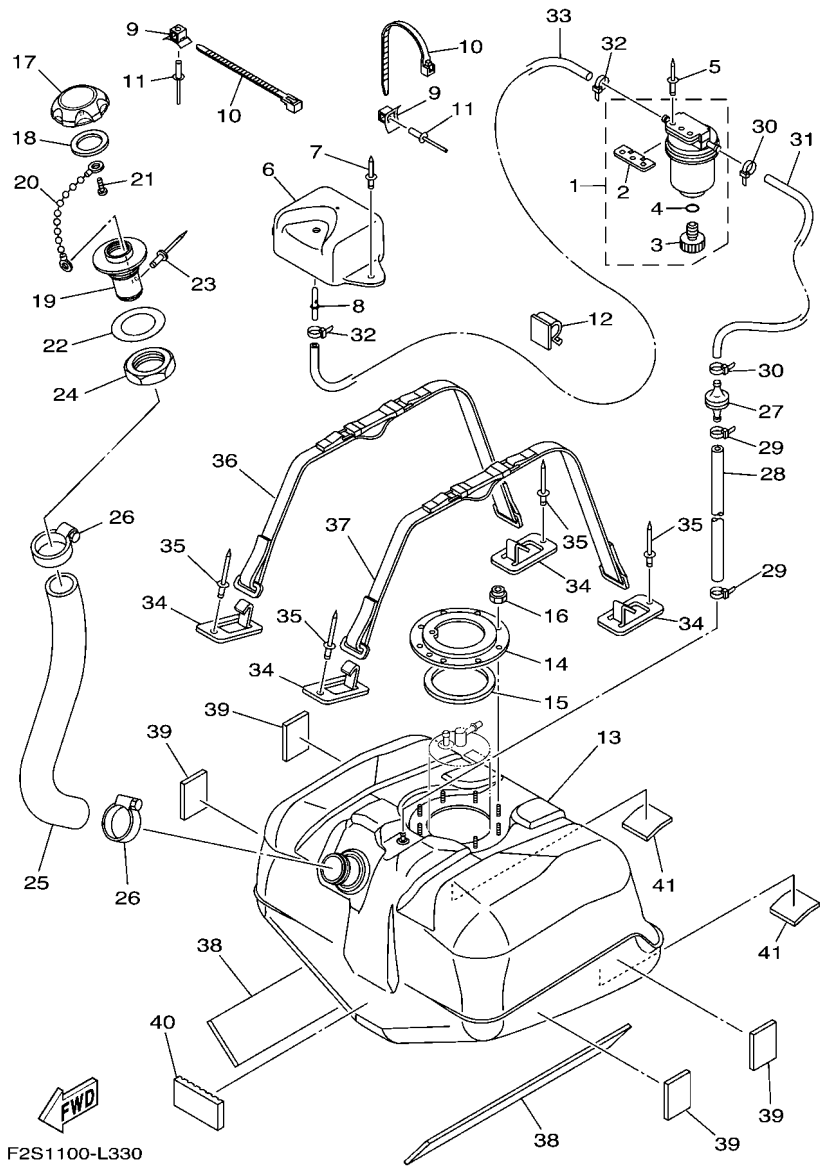

FIG. 32 FUEL TANK

REF. NO.	PART NO.	DESCRIPTION	F2TP	F2TR				REMARKS
28	F2H–U785H–00	HOSE, AIR VENT 3	1	1				
29	90465–11829	CLAMP	2	2				
30	90465–11829	CLAMP	2	2				
31	F0D–U785G–10	HOSE, AIR VENT	1	1				
32	90465–11829	CLAMP	2	2				
33	F0D–U7856–10	HOSE, AIR VENT 3	1	1				
34	F1K–U5772–04	HOOK A	4	4				
35	90267–489U1	RIVET,BLIND	4	4				
36	F2S–67743–00	BELT, TANK 1	1	1				
37	F2S–67743–00	BELT, TANK 1	1	1				
38	F2S–U759B–00	MAT 1	2	2				
39	F1W–U759C–01	MAT 2	4	4				
40	F1K–U759C–00	MAT 2	1	1				
41	F1K–U759C–00	MAT 2	2	2				

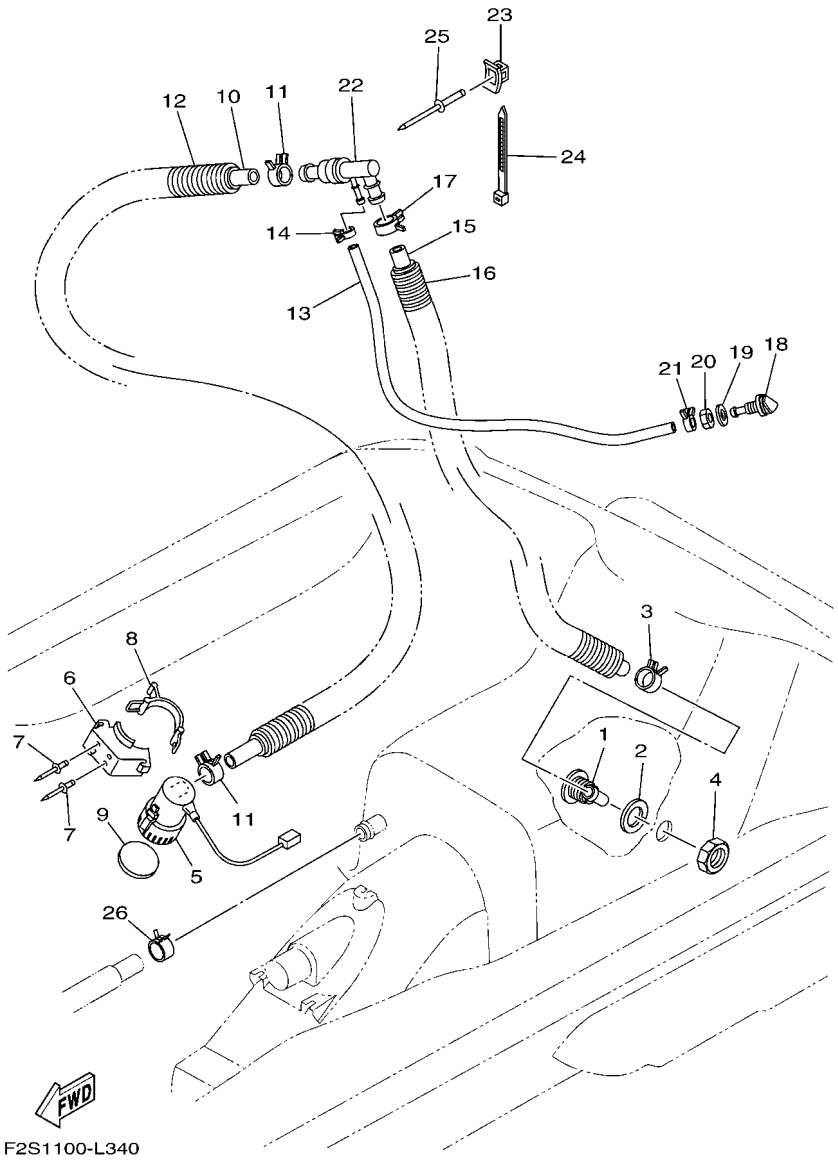

FIG. 33 BILGE PUMP

REF. NO.	PART NO.	DESCRIPTION	F2TP	F2TR				REMARKS
1	F1W–U224E–00	BODY, DRAIN 3	1	1				
2	F1S–U7525–01	PACKING	1	1				
3	90467–26800	CLIP	1	1				
4	F1B–62241–00	DRAIN, COCKPIT	1	1				
5	F1B–U8360–01	BILGE PUMP ASSY	1	1				
6	F1B–U7698–01	BRACKET	1	1				
7	F3J–U516R–00	RIVET 1	2	2				
8	GA7–68218–00	BAND, BATTERY	1	1				
9	F1B–U7656–00	PACKING, BILGE	1	1				
10	F1B–U7626–00	HOSE 1	1	1				
11	90467–25801	CLIP	2	2				
12	90447–28004	HOSE, WITH SPRING (L800)	1	1				
13	F3J–U7629–00	HOSE, DRAIN 2	1	1				
14	90467–14803	CLIP	1	1				
15	F1B–U7628–00	HOSE, DRAIN 3	1	1				
16	90447–28004	HOSE, WITH SPRING (L800)	1	1				
17	90467–26800	CLIP	1	1				
18	GH7–6753B–00	PILOT,WATER	1	1				
19	90430–16910	GASKET	1	1				
20	GP7–61652–00	NUT	1	1				
21	90467–14803	CLIP	1	1				
22	F1S–67620–00	HOSE JOINT	1	1				
23	F1W–U828M–00	BASE, CLAMP	1	1				
24	F2C–U4256–00	CLAMP	1	1				
25	90267–489U6	RIVET, BLIND	1	1				
26	90467–26800	CLIP	1	1				

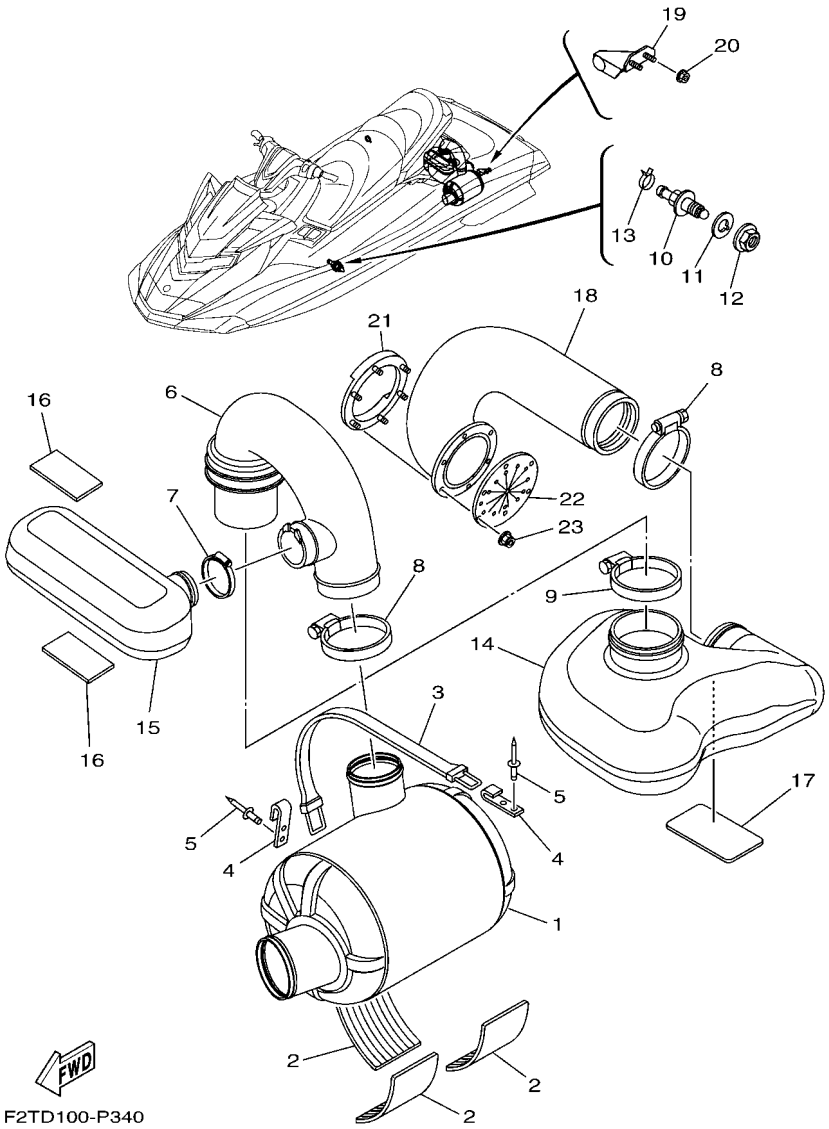

FIG. 34 EXHAUST 3

REF. NO.	PART NO.	DESCRIPTION	F2TP	F2TR				REMARKS
1	F1W–U7550–02	WATER LOCK COMP.	1	1				
2	F1S–U8221–00	PAD, BATTERY	3	3				
3	EW2–67821–00	BAND, FUEL TANK	1	1				
4	GA7–65772–00	HOOK A	2	2				
5	90267–489U1	RIVET,BLIND	4	4				
6	F2S–U7555–01	HOSE, EXHAUST	1	1				
7	90601–170UG	BAND, HOSE 70	1	1				
8	90450–99801	HOSE CLAMP ASSY	2	2				
9	90450–99804	HOSE CLAMP ASSY	1	1				
10	F2C–U753B–01	PILOT, WATER	1	1				
11	F2C–U7564–00	GASKET	1	1				
12	F2C–U2733–00	NUT	1	1				
13	90467–17802	CLIP	1	1				
14	F2N–U4261–00	TANK, WATER	1	1				
15	F2S–U753C–00	RESONATOR 1	1	1				
16	F1K–U759C–00	MAT 2	2	2				
17	F1S–U8221–00	PAD, BATTERY	1	1				
18	F2N–U758D–00	HOSE,EXHAUST 3	1	1				
19	F2C–U755G–00	BRKT., WATER LOCK	1	1				
20	F2N–U142L–00	NUT, LOCK	2	2				
21	F1S–U757B–01	PLATE	1	1				
22	F1B–U751G–00	VALVE, EXHAUST	1	1				
23	F2N–U142L–00	NUT, LOCK	6	6				

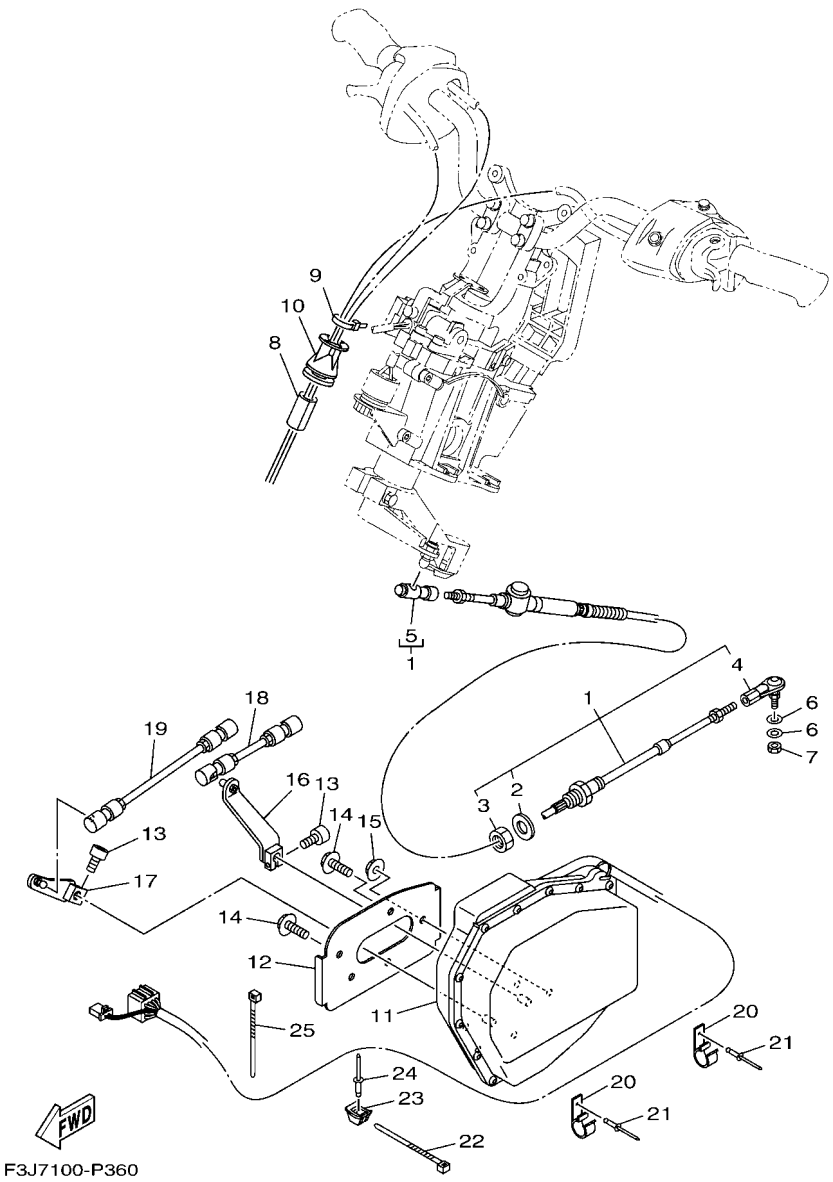

FIG. 35 CONTROL CABLE

REF. NO.	PART NO.	DESCRIPTION	F2TP	F2TR				REMARKS
1	F1S–61481–10	CABLE, STEERING	1	1				
2	F1B–61438–00	.PACKING C	1	1				
3	F1B–6151S–00	.NUT	1	1				
4	F1B–61461–02	.STUD, JOINT BALL	1	1				
5	F2N–61460–00	.BALL JOINT ASSY	1	1				
6	90201–06906	WASHER, PLATE	2	2				
7	9538R–06700	NUT	1	1				
8	GJ1–U7578–21	PACKING, HOSE 2	1	1				
9	90464–32801	CLAMP	1	1				
10	F3J–U822E–00	GROMMET	1	1				
11	F3J–6140B–00	MOTOR ASSY.	1	1				
12	F3J–U8285–00	PLATE	1	1				
13	90110–06040	BOLT, HEXAGON SOCKET HEAD	2	2				
14	90119–08851	BOLT, WITH WASHER	2	2				
15	9572R–08300	NUT, FLANGE	3	3				
16	F3J–6150E–00	TRIM ARM ASSY	1	1				
17	F3J–6150F–00	SHIFT ARM ASSY	1	1				
18	F3J–6150A–00	ROD ASSY	1	1				
19	F3J–6150D–00	ROD ASSY 2	1	1				
20	F3J–U8368–01	CLAMP	2	2				
21	90267–409U5	RIVET, BLIND	2	2				
22	90464–32801	CLAMP	1	1				
23	F1W–U828M–00	BASE, CLAMP	1	1				
24	90267–48802	RIVET, BLIND	1	1				
25	90464–32801	CLAMP	1	1				

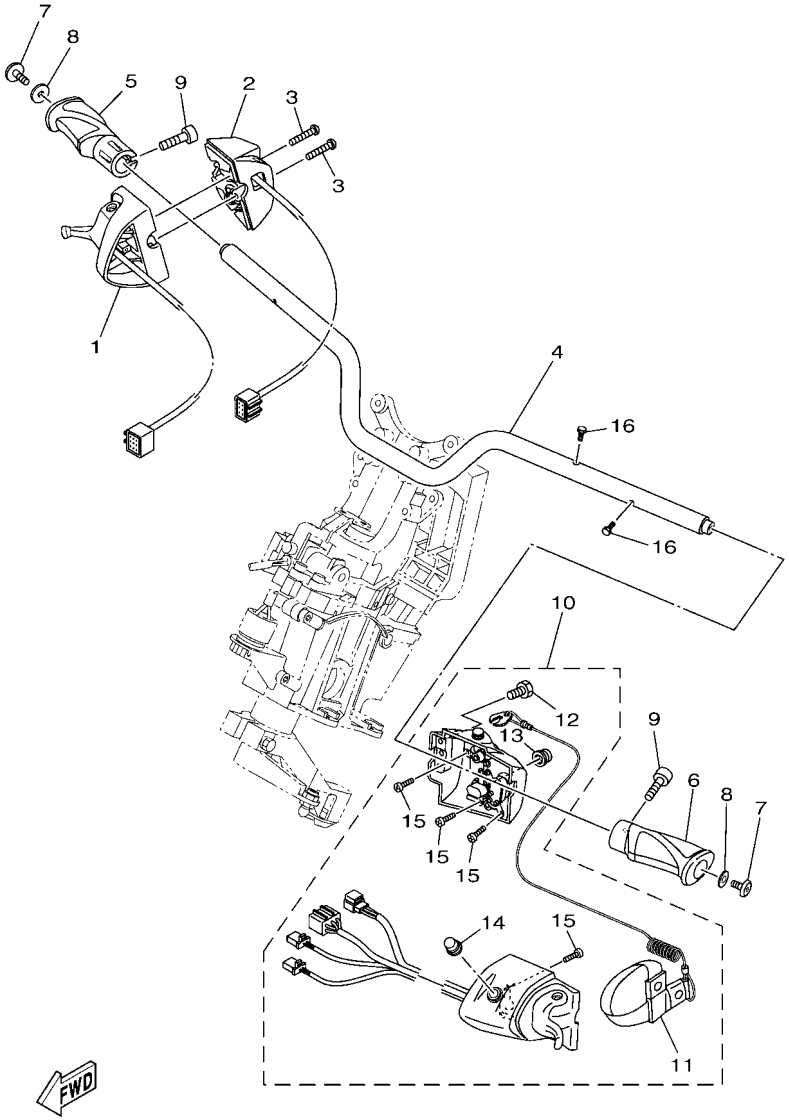

F3J7100-P370

FIG. 36 STEERING 1

REF. NO.	PART NO.	DESCRIPTION	F2TP	F2TR				REMARKS
1	6CS–14305–10	THROTTLE LEVER COMP	1	1				
2	6CS–81860–00	SWITCH ASSY	1	1				
3	6CS–6725F–00	BOLT, THROTTLE	2	2				
4	F3J–U1552–00	HANDLE	1	1				
5	F2S–U155D–02	GRIP, HANDLE	1	1				
6	F2S–U155D–02	GRIP, HANDLE	1	1				
7	90110–06382	BOLT, HEXAGON SOCKET HEAD	2	2				
8	90201–068G0	WASHER, PLATE	2	2				
9	F2S–U1516–00	BOLT	2	2				
10	F3J–68310–00	SWITCH BOX ASSY	1	1				
11	EW2–68348–00	.LANYARD, STOP SWITCH	1	1				
12	6CS–6725F–00	.BOLT, THROTTLE	4	4				
13	FK7–68312–02	.STOP BUTTON COMP	1	1				
14	FK7–68313–02	.START BUTTON COMP.	1	1				
15	97780–30610	.SCREW, TAPPING	8	8				
16	91380–04030	BOLT	2	2				

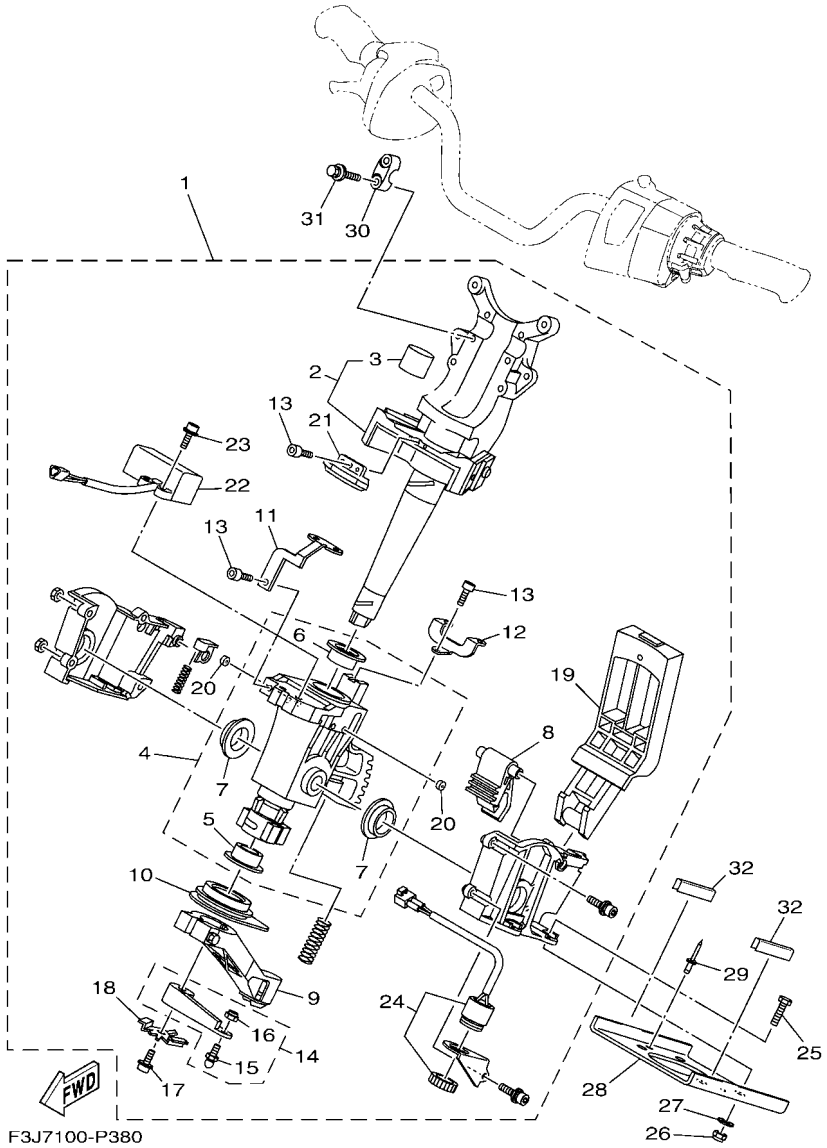

FIG. 37 STEERING 2

REF. NO.	PART NO.	DESCRIPTION	F2TP	F2TR				REMARKS
1	F3J–61400–00	STEERING MASTER ASSY	1	1				
2	F3J–67410–00	.SHAFT ASSY	1	1				
3	F1W–61435–00	..SEAL, PIPE 30	1	1				
4	F1W–6773D–00	.TUBE & BUSHING SET	1	1				
5	F1S–6134M–00	..BUSH	1	1				
6	F2C–6134M–00	..BUSH	1	1				
7	F1S–6134M–10	..BUSH	2	2				
8	F1S–61782–00	.LOCK 1	1	1				
9	F1S–6146A–00	.CABLE STOPPER ASSY.	1	1				
10	F1S–6143C–00	.SEAL, RUBBER	1	1				
11	F3J–65938–00	.STAY 1	1	1				
12	F3J–65939–00	.STAY 2	1	1				
13	F1B–613C1–00	.SCREW	3	3				
14	F1S–6153R–01	.ARM ASSY.	1	1				
15	EU0–61461–02	..STUD, JOINT BALL	1	1				
16	95720–06300	..NUT, SELF-LOCKING	1	1				
17	F1W–61355–00	.BOLT	1	1				
18	F1W–6142B–00	.PLATE, RETAINING	1	1				
19	F2S–6151M–00	.LEVER ASSY	1	1				
20	F1W–6358B–00	.PLUG	4	4				
21	F3J–6838C–00	.MAGNET	1	1				
22	F3J–6838B–00	.SENSOR, MAGNET	1	1				
23	F1W–61516–00	.BOLT	9	9				
24	F1S–68341–00	.BUZZER	1	1				
25	97080–08035	BOLT	4	4				
26	9572R–08300	NUT, FLANGE	4	4				
27	F1W–U725E–00	WASHER	4	4				

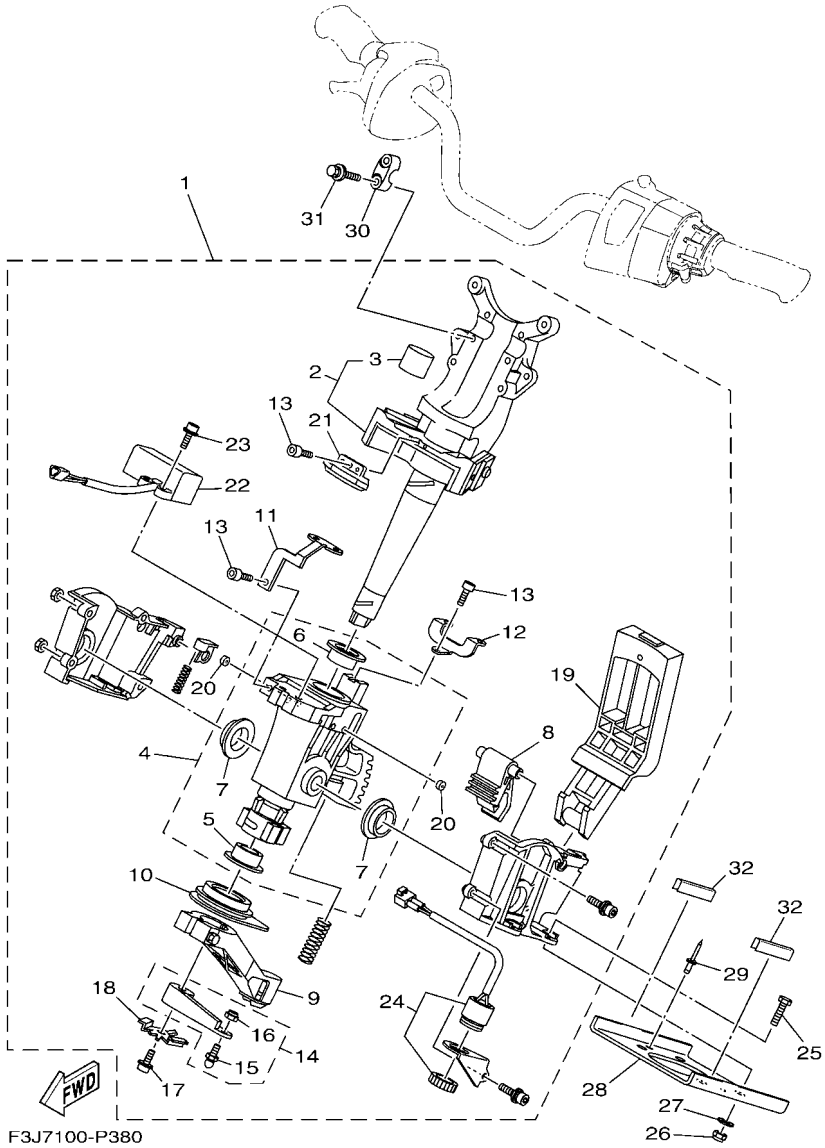

FIG. 37 STEERING 2

REF. NO.	PART NO.	DESCRIPTION	F2TP	F2TR				REMARKS
28	F1X–U1554–00	PLATE, RETAINING	1	1				
29	90267–489U6	RIVET, BLIND	2	2				
30	EU0–23814–31	HOLDER, HANDLE UPPER	2	2				
31	90119–089UU	BOLT, WITH WASHER	4	4				
32	F2S–U5162–00	TRIM	2	2				

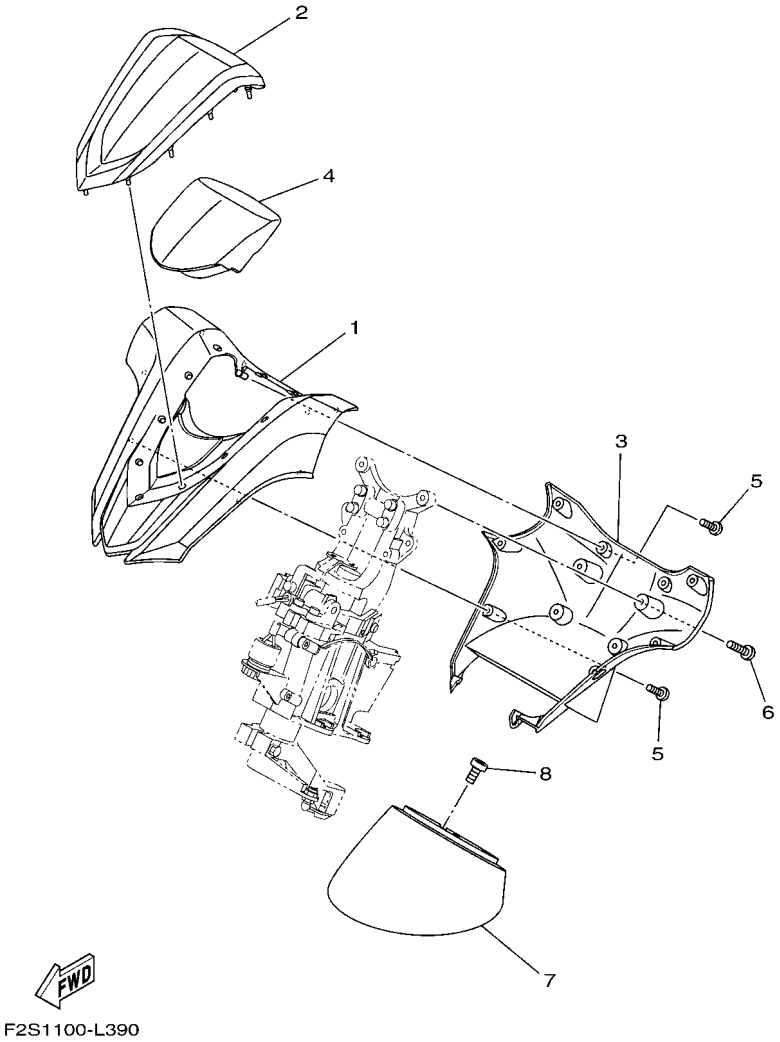

FIG. 38 STEERING 3

REF. NO.	PART NO.	DESCRIPTION	F2TP	F2TR				REMARKS
1	F2S–U143D–10	PAD, STEERING 1	1	1				
2	F2S–U142D–30	COVER, PAD	1	1				
3	F2S–U143E–10	PAD, STEERING 2	1	1				
4	F2S–U142E–00	CUSHION, PAD 1	1	1				
5	F2S–U13C1–00	SCREW	8	8				
6	90154–06017	SCREW, BINDING	4	4				
7	F2S–U143L–01	PAD, STEERING 3	1	1				
8	90154–06030	SCREW, BINDING	4	4				

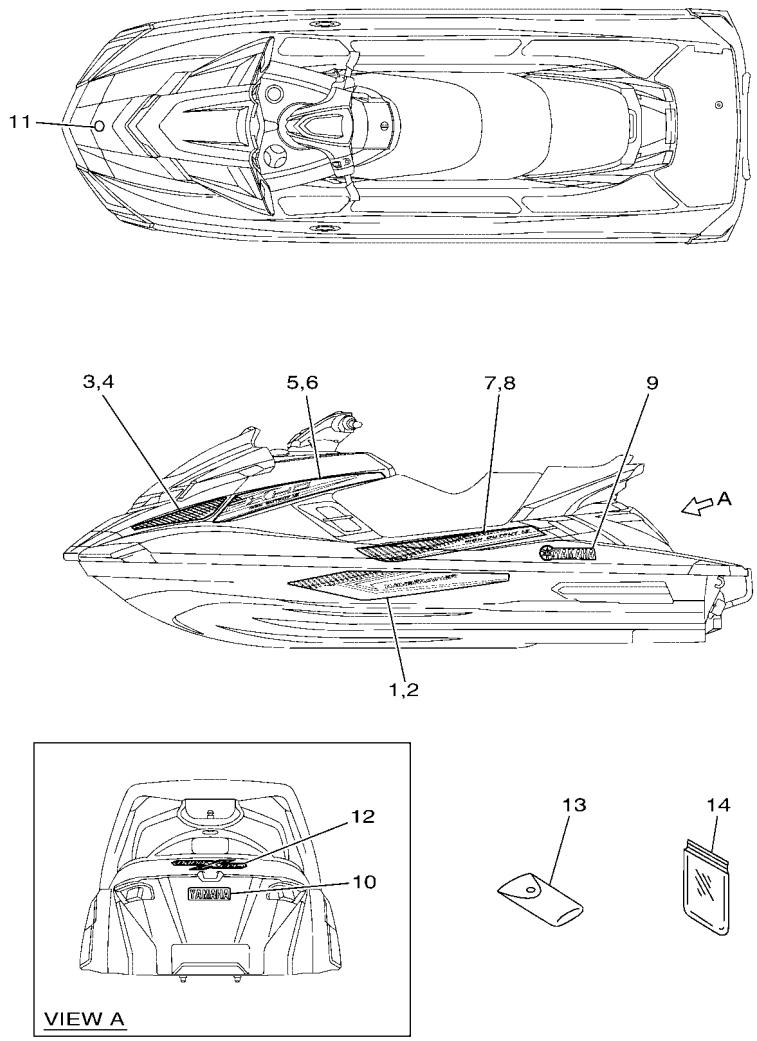

F2TP100-S390

FIG. 39 GRAPHICS

REF. NO.	PART NO.	DESCRIPTION	F2TP	F2TR				REMARKS
1	F2T–U417B–J0	GRAPHIC 1 (LH)	1	1				
2	F2T–U417C–J0	GRAPHIC 2 (RH)	1	1				
3	F2T–U417D–J0	GRAPHIC 3 (LH)	1	1				
4	F2T–U417E–J0	GRAPHIC 4 (RH)	1	1				
5	F2T–U417F–J0	GRAPHIC 5 (LH)	1	1				
6	F2T–U417G–J0	GRAPHIC 6 (RH)	1	1				
7	F2T–U417H–J0	GRAPHIC 7 (LH)	1	1				
8	F2T–U417J–J0	GRAPHIC 8 (RH)	1	1				
9	F3J–U4116–00	MARK, YAMAHA 3	2	2				
10	F1B–U411C–02	EMBLEM, YAMAHA	1	1				
11	F2S–6411H–00	EMBLEM, TUNING FORK	1	1				
12	F1W–U4121–00	EMBLEM A	1	1				
13	F1B–65986–13	TOOL SET	1	1				
14	EU0–65901–02	TOOL BAG	1	1				

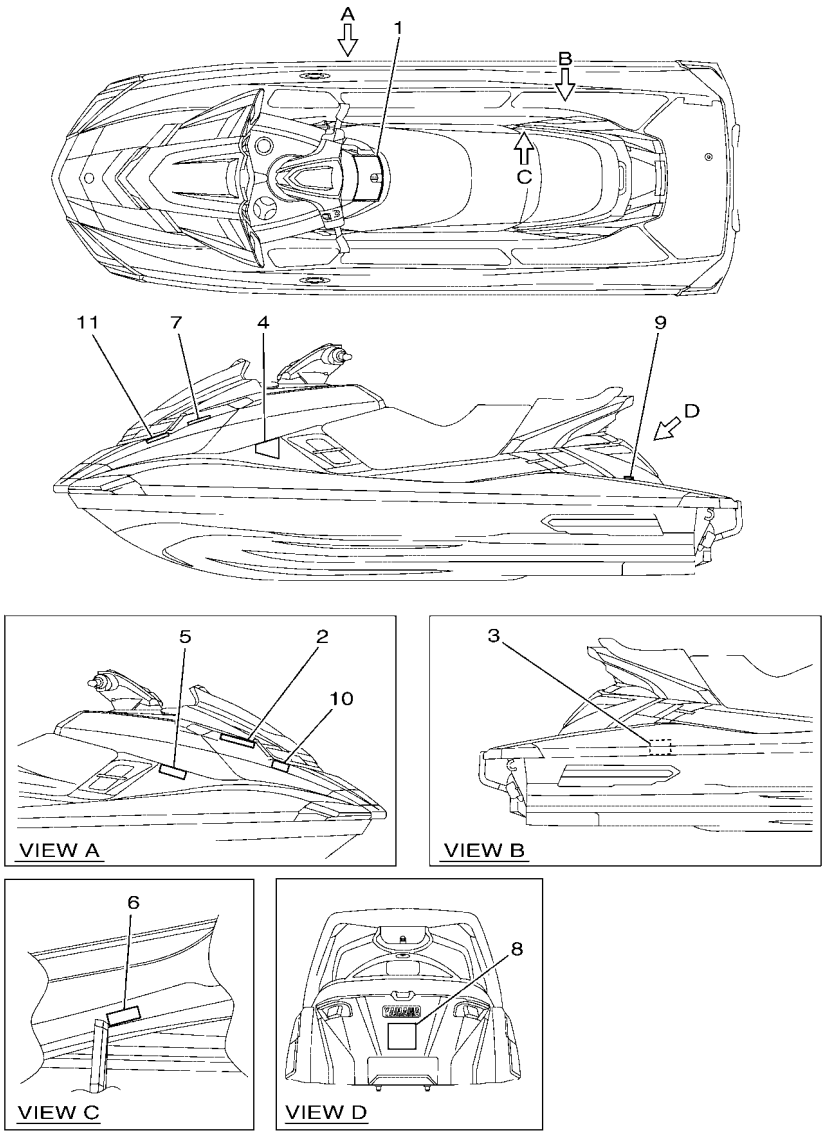

F2TP100-S400

FIG. 40 IMPORTANT LABELS

REF. NO.	PART NO.	DESCRIPTION	F2TP	F2TR				REMARKS
1	F2S–U41B1–10	LABEL, WARNING UNIFORM 1	1	1				
2	F1B–U41B1–21	LABEL, WARNING UNIFORM 1	1	1				
3	F2S–U41B1–30	LABEL, WARNING UNIFORM 1	1	1				
4	F0M–U41B2–11	LABEL, WARNING UNIFORM 2	1	1				
5	F1B–U415B–11	LABEL, WARNING(FUEL)	1	1				
6	F0V–U41DB–12	LABEL, WARNING BATTERY	1	1				
7	F1B–U41F5–21	LABEL, FIRE EXTINGUISHER 1	1	1				
8	F2S–U41E1–10	LABEL, SET 1	1	1				
9	GJ3–U419E–00	LABEL 4	1					FOR CAN
10	F4G–U413P–10	LABEL, BUILDERS PLATE		1				FOR EUR
11	GP8–U416H–01	LABEL,WARNING(FRANCE)		1				FOR EUR

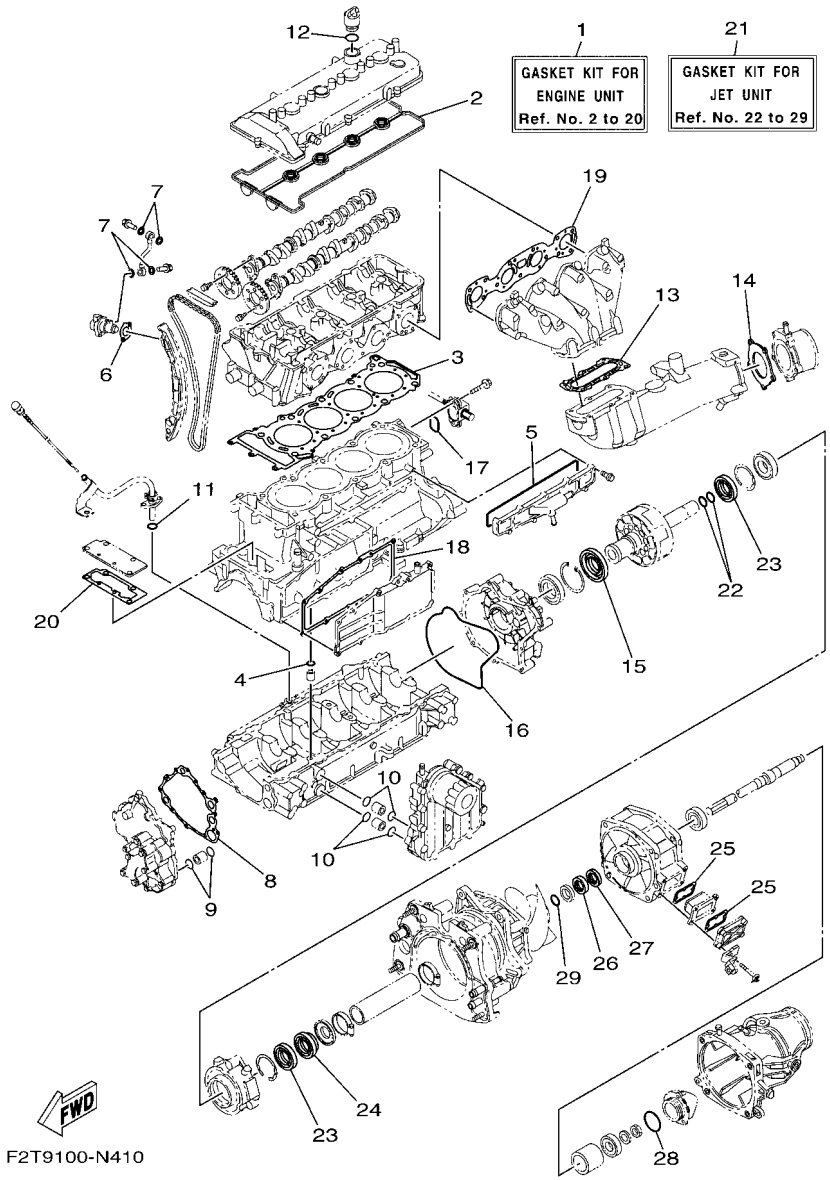

FIG. 41 REPAIR KIT 1

REF. NO.	PART NO.	DESCRIPTION	F2TP	F2TR				REMARKS
1	6CR–W0001–01	GASKET KIT FOR ENGINE UNIT	1	1				
2	6BH–11193–00	.GASKET, HEAD COVER 1	1	1				
3	6BH–11181–00	.GASKET, CYLINDER HEAD 1	1	1				
4	93210–11453	.O-RING	1	1				
5	6CS–12517–00	.GASKET, WATER INLET	1	1				
6	6S5–121E2–00	.GASKET	1	1				
7	90430–10007	.GASKET	4	4				
8	6S5–13563–00	.GASKET	1	1				
9	93210–21631	.O-RING	2	2				
10	93210–18322	.O-RING	4	4				
11	93210–12016	.O-RING	1	1				
12	93210–24M79	.O-RING	1	1				
13	6S5–14739–00	.GASKET, MUFFLER DAMPER 1	1	1				
14	6BH–14749–00	.GASKET, MUFFLER DAMPER 2	1	1				
15	6S5–81167–10	.OIL SEAL	1	1				
16	6S5–81168–00	.O-RING	1	1				
17	93210–32172	.O-RING	1	1				
18	6BH–13557–00	.GASKET	1	1				
19	6BH–14613–00	.GASKET, EXHAUST PIPE	1	1				
20	6BH–1131B–00	.GASKET, COVER	1	1				
21	6S5–W0001–22	GASKET KIT FOR JET UNIT	1	1				
22	93210–22MF1	.O-RING	2	2				
23	93102–29008	.OIL SEAL	2	2				
24	93102–29009	.OIL SEAL	1	1				
25	66V–42414–00	.O-RING	2	2				
26	93102–31009	.OIL SEAL	1	1				
27	93101–31001	.OIL SEAL	1	1				

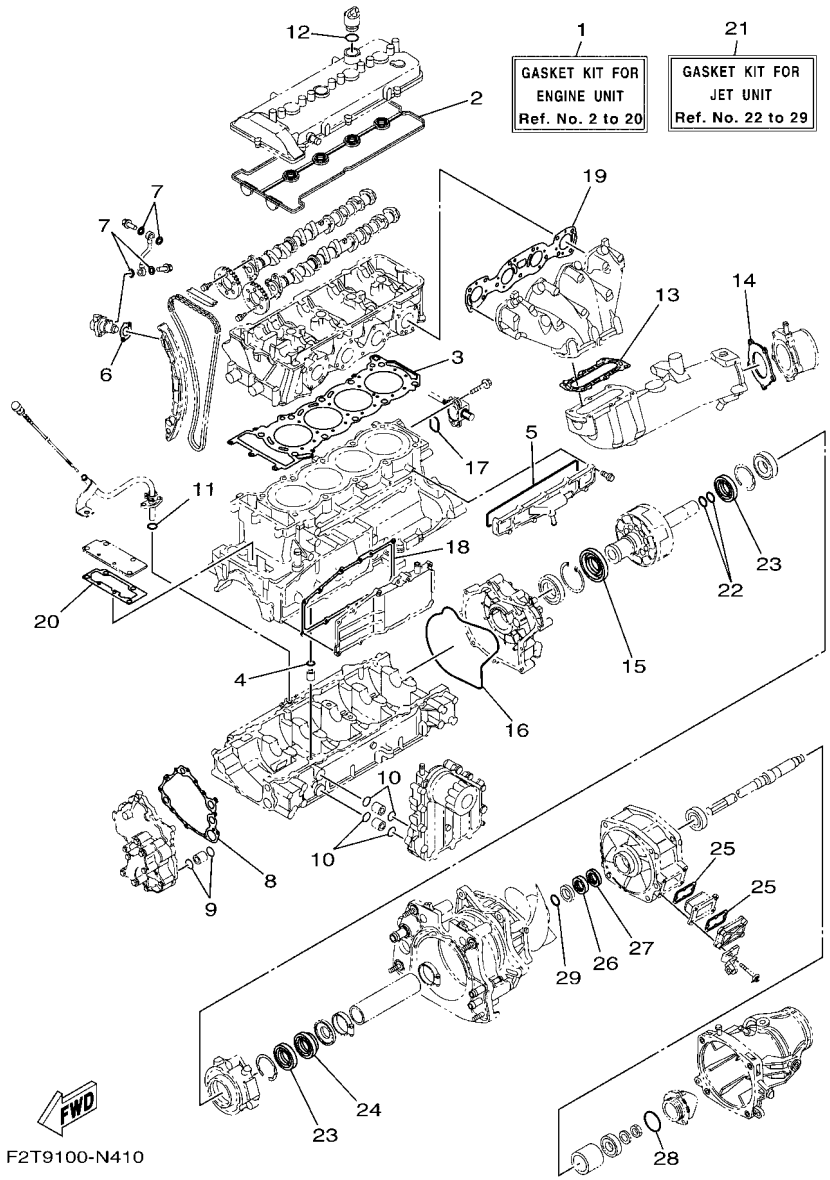

FIG. 41 REPAIR KIT 1

REF. NO.	PART NO.	DESCRIPTION	F2TP	F2TR				REMARKS
28	93210–54010	.O-RING	1	1				
29	93210–30611	.O-RING	1	1				

PART NO.	REF. NO.
6BH–11102–11	2 – 2
6BH–11119–00	2 – 14
6BH–1111E–00	2 – 12
6S5–11133–10	2 – 3
6S5–11166–10	11 – 1
6S5–11167–10	11 – 5
6BH–11181–00	2 – 11
	41 – 3
6BH–11191–20	1 – 1
6BH–11193–00	1 – 3
	41 – 2
69J–11301–10	3 – 9
6BH–1131B–00	3 – 28
	41 – 20
6BH–1131C–00	3 – 27
6S5–1131M–10–8P	3 – 17
68V–11325–02	3 – 10
67F–11328–00	3 – 11
6S5–11377–00	3 – 16
6ET–11411–00	4 – 1
6S5–11416–00	4 – 2
6S5–11416–10	4 – 2
6S5–11416–20	4 – 2
6S5–11416–30	4 – 2
6S5–11416–40	4 – 2
6S5–11459–01	4 – 14
6S5–11603–00	4 – 4
6BH–11631–00–B0	4 – 3
6S5–11633–00	4 – 5
6BH–11650–10	4 – 7
6S5–11654–10	4 – 8
6S5–11656–40	4 – 9
6S5–11656–50	4 – 9
6S5–11656–60	4 – 9
6S5–11656–70	4 – 9
6S5–12111–00	5 – 5
6S5–12113–00	5 – 8
6S5–12116–00	5 – 7
6S5–12117–00	5 – 9
3LD–12118–00	5 – 10
51Y–12119–00	5 – 11
6S5–12121–00	5 – 6
6S5–12153–00	5 – 13
3LD–12168–00	5 – 12
3LD–12168–20	5 – 12
3LD–12168–40	5 – 12
3LD–12168–60	5 – 12
3LD–12168–80	5 – 12

PART NO.	REF. NO.
3LD–12168–A0	5 – 12
3LD–12168–F0	5 – 12
3LD–12168–H1	5 – 12
3LD–12168–K1	5 – 12
3LD–12168–M1	5 – 12
3LD–12168–R1	5 – 12
3LD–12168–U1	5 – 12
3LD–12168–W1	5 – 12
3LD–12168–Y1	5 – 12
3LD–12169–11	5 – 12
3LD–12169–31	5 – 12
3LD–12169–50	5 – 12
3LD–12169–70	5 – 12
3LD–12169–90	5 – 12
3LD–12169–E0	5 – 12
3LD–12169–G0	5 – 12
3LD–12169–J0	5 – 12
3LD–12169–L0	5 – 12
6BH–12171–10	5 – 1
6ET–12176–00	5 – 3
6BH–12181–10	5 – 2
6S5–121E2–00	5 – 19
	41 – 6
6S5–12210–01	5 – 18
6S5–12228–01	2 – 7
6BH–12241–00	5 – 25
6ET–12251–00	5 – 24
6ET–12252–00	5 – 15
6BH–12279–00	5 – 16
6S5–12289–00	4 – 11
6D3–12411–00	2 – 16
6BH–12413–00	2 – 17
6S5–1243E–01	13 – 9
6BH–1244H–00	13 – 20
6CS–12469–A0	3 – 21
6CS–12517–00	3 – 22
	41 – 5
6BH–12577–00	13 – 25
6S5–12578–00	2 – 19
6S5–12579–00	13 – 27
6CS–12580–00	13 – 5
60E–12581–00	13 – 4
6BH–12584–00	13 – 13
6CS–12588–00	13 – 22
6S5–12589–01	13 – 18
6S5–12858–00	10 – 2
6CS–12880–00	6 – 5
6S5–1310A–25	9 – 1

PART NO.	REF. NO.
6BH–1319K–00	3 – 34
6BH–13300–12	8 – 1
6BH–13300–12	9 – 4
6S5–13337–10	3 – 24
6S5–13405–11	9 – 2
6S5–13418–00	5 – 21
69J–13440–03	10 – 1
60E–13446–00	10 – 12
6S5–13446–10	8 – 5
6BH–13470–21	10 – 3
6S5–13477–00	9 – 3
6BH–13532–00	6 – 21
6BH–13556–00	10 – 4
8FP–13556–10	6 – 15
6BH–13557–00	3 – 18
	41 – 18
6S5–13563–00	8 – 2
	41 – 8
6BH–13641–10	6 – 2
6BH–13750–01	6 – 1
6S5–13761–10	6 – 13
6S5–13907–02	22 – 1
6BH–14126–00	6 – 4
6BH–14156–00	6 – 3
6CR–14163–00	6 – 12
68V–1416A–00	6 – 14
6S5–14285–00	6 – 18
6AN–14294–10	6 – 23
6CS–14305–10	36 – 1
6BH–14445–00	6 – 20
6CS–14445–00	6 – 30
6CS–14446–00	6 – 7
6D3–1444B–00	6 – 16
6S5–14457–00	6 – 19
6CR–14536–00	6 – 11
6CR–14572–00	6 – 29
6BH–14613–00	12 – 1
	41 – 19
6BH–14711–10	12 – 2
6BH–14721–10	12 – 6
6S5–14739–00	12 – 7
	41 – 13
6BH–14749–00	12 – 14
	41 – 14
6CS–1475A–00	12 – 18
6S5–14771–00–94	12 – 11
6BH–14784–01–94	12 – 15
6CR–15100–11	3 – 1

PART NO.	REF. NO.
6ET–15362–00	3 – 31
6S5–15363–00	1 – 10
6S5–15486–10	9 – 5
5EL–15511–00	19 – 6
6S5–15515–00	18 – 3
6S5–15517–00	18 – 5
6S5–15521–00	18 – 4
6S5–15590–00	18 – 1
6S5–17031–01	4 – 16
6S5–17525–01	4 – 13
6S5–17572–01	4 – 10
6BH–17586–11	4 – 15
EU0–23814–31	37 – 30
6S5–24300–01	6 – 22
70R–24489–00	32 – 4
70R–24543–00	32 – 3
6EX–2812A–00	20 – 16
6BH–41661–00–94	23 – 4
6BH–41662–00–94	23 – 5
66V–42414–00	14 – 9
	41 – 25
67X–44517–10	23 – 1
663–45119–00	15 – 11
6S5–45332–00–94	15 – 4
6S5–45511–00	14 – 17
6S5–45593–00–94	15 – 12
6ET–45613–00	15 – 9
6S5–45813–01–94	4 – 12
6BH–4581J–00	15 – 1
68N–5112T–00	26 – 3
66V–51312–01–94	14 – 4
6S5–51315–02	14 – 7
6S5–51323–00	15 – 2
6BH–51348–01	14 – 24
6S5–52358–00	16 – 11
F1S–6134M–00	37 – 5
F2C–6134M–00	37 – 6
F1S–6134M–10	37 – 7
F1W–61355–00	37 – 17
F1B–613C1–00	37 – 13
F3J–61400–00	37 – 1
F3J–6140B–00	35 – 11
F1W–6142B–00	37 – 18
F1W–61435–00	37 – 3
F1B–61438–00	35 – 2
F1S–6143C–00	37 – 10
F2N–61460–00	35 – 5
EU0–61461–02	37 – 15

PART NO.	REF. NO.
F1B–61461–02	35 – 4
F1S–6146A–00	37 – 9
F1S–61481–10	35 – 1
F3J–6150A–00	35 – 18
F3J–6150D–00	35 – 19
F3J–6150E–00	35 – 16
F3J–6150F–00	35 – 17
F1W–61516–00	37 – 23
F2S–6151M–00	37 – 19
F1B–6151S–00	35 – 3
F1S–6153R–01	37 – 14
F1K–61624–00	27 – 1
F0X–61637–00	27 – 4
EU0–61652–00	13 – 34
	26 – 8
F0X–61652–00	27 – 5
GP7–61652–00	33 – 20
F1S–61782–00	37 – 8
EW2–62142–00	32 – 2
F1G–62149–00	32 – 8
F2F–6214A–00	32 – 1
GJ3–6215F–00	22 – 17
F1B–62241–00	33 – 4
F2S–6273B–00	17 – 23
F1X–62875–00	24 – 34
F1W–6358B–00	37 – 20
F2S–6411H–00	39 – 11
F2S–6514S–00	25 – 20
F1W–6514T–00	25 – 21
F1B–6517R–00	24 – 35
GA7–65772–00	34 – 4
EU0–65901–02	39 – 14
F3J–65938–00	37 – 11
F3J–65939–00	37 – 12
F1B–65986–13	39 – 13
6CS–6725F–00	36 – 3
	36 – 12
F3J–67410–00	37 – 2
GH7–6753B–00	33 – 18
F1S–67620–00	33 – 22
F1W–6773D–00	37 – 4
F2S–67743–00	32 – 36
	32 – 37
F1B–67747–00	32 – 15
EU0–67767–31	32 – 27
EW2–67821–00	34 – 3
F2N–67823–10	24 – 9
F2S–68090–00	22 – 21

PART NO.	REF. NO.
F2S–68090–10	22 – 22
F2S–6820A–31	22 – 19
GA7–68218–00	33 – 8
6S5–682E0–00	22 – 2
F3J–68310–00	36 – 10
FK7–68312–02	36 – 13
FK7–68313–02	36 – 14
F1S–68341–00	37 – 24
EW2–68348–00	36 – 11
F3J–6838B–00	37 – 22
F3J–6838C–00	37 – 21
6S5–81167–10	18 – 13
	41 – 15
6S5–81168–00	18 – 17
	41 – 16
6S5–81315–00	21 – 21
6S5–81328–00	18 – 18
6S5–81337–20	18 – 11
6S5–81364–10	18 – 24
6S5–81410–11	18 – 7
6S5–81450–01	18 – 6
6S5–81800–00	19 – 1
6S5–81810–00	19 – 13
6S5–81820–00	19 – 12
6S5–81826–00	19 – 10
6S5–81830–00	19 – 3
6S5–81840–00	19 – 8
11H–81844–00	19 – 2
4G0–81844–00	19 – 4
5EL–81845–00	19 – 11
6CS–81845–00	20 – 2
3TB–81847–00	19 – 9
1J7–81847–60	19 – 5
5A8–81850–10	19 – 14
6CS–81860–00	36 – 2
1B7–81940–00	20 – 28
6S5–81942–11	20 – 3
6CS–81953–00	20 – 32
6EX–8195A–00	20 – 15
6S5–81960–11	21 – 1
6S5–81972–01–94	21 – 3
6S5–81975–00	21 – 2
6CS–82115–00	20 – 26
6S5–82116–00	22 – 29
6CS–82117–00	20 – 27
67F–82151–00	20 – 12
6EX–82151–00	20 – 14
67F–82151–10	20 – 13

PART NO.	REF. NO.
67F–82151–30	20 – 10
67F–82151–40	20 – 11
6EX–82170–01	20 – 9
6S5–82310–00	21 – 9
61N–82317–00	1 – 7
6A0–82317–00	20 – 7
	20 – 22
6BH–82380–00	6 – 10
68V–82504–00	21 – 20
60E–82556–00	22 – 3
6CR–82560–00	21 – 15
6CS–82588–00	20 – 17
1UA–82591–00	25 – 22
6S5–8259E–00	20 – 24
6CR–8259L–20	20 – 34
6CS–8273J–10	21 – 22
60E–83627–00	20 – 4
682–84385–01	13 – 8
6CS–85516–00	3 – 35
6CS–8572F–00	3 – 33
61A–85790–00	21 – 13
6AA–85790–00	21 – 26
65L–85886–00	6 – 17
60E–85896–01	21 – 18
6CR–8591A–24	20 – 5
6B6–86261–00	22 – 30
6B6–86261–10	22 – 30
6B6–86265–00	22 – 31
6B6–86265–10	22 – 31
6BH–E110M–00	1 – 4
6S5–E118E–00	1 – 6
6S5–E1328–00	1 – 5
6ET–E2289–00	15 – 13
67X–E2590–10	13 – 33
6S5–E4410–01	7 – 6
6BH–E4419–00	7 – 12
6S5–E4436–00	7 – 8
6S5–E4451–00	7 – 7
6S5–E4752–00	12 – 17
6S5–G2717–00	7 – 9
6BH–G4532–00	23 – 2
6BH–G4574–00	23 – 3
6AN–G5214–00	14 – 10
6CS–G5538–00	14 – 13
6CS–G5831–10	14 – 1
6AN–G6882–00	14 – 8
6BH–R1142–10	7 – 13
6AN–R1190–00	14 – 38
6S5–R1313–01	14 – 35
6ET–R1314–01	16 – 4
6BH–R1318–01	14 – 26
6BH–R1321–01	14 – 23
6AN–R1326–00	14 – 20
6CS–R1333–00	17 – 1
6ET–R1341–00	16 – 1
6AN–R1341–01	17 – 2
6ET–R1342–00	16 – 2
6S5–R1381–01	15 – 17
F2C–U1314–00	27 – 15
F2S–U13C1–00	24 – 18
	25 – 8
	25 – 12
	25 – 46
	31 – 31
	31 – 32
	38 – 5
F2S–U142D–30	38 – 2
F2S–U142E–00	38 – 4
F2N–U142L–00	22 – 10
	24 – 11
	24 – 22
	24 – 27
	24 – 30
	24 – 32
	28 – 3
	28 – 12
	28 – 15
	28 – 18
	34 – 20
	34 – 23
F2S–U143D–10	38 – 1
F2S–U143E–10	38 – 3
F2S–U143L–01	38 – 7
EU0–U1461–03	16 – 14
GH3–U146E–00	14 – 39
F2S–U1516–00	36 – 9
F2C–U151S–00	17 – 5
F3J–U1552–00	36 – 4
F1X–U1554–00	37 – 28
F2S–U155D–02	36 – 5
	36 – 6
F2N–U1628–02	31 – 1
F1B–U1629–00	31 – 16
F1B–U1653–02	31 – 4
F2S–U1708–02	24 – 7
F2N–U2127–00	29 – 3
F2N–U213G–01	29 – 5
F1W–U2159–00	32 – 6
F1W–U2159–00	14 – 30
F2S–U2187–00	29 – 1
F2S–U2188–00	29 – 2
F1W–U224E–00	33 – 1
F1S–U2280–02	26 – 19
F2S–U2284–00	31 – 26
F1S–U2285–00	26 – 20
F2S–U2511–10	28 – 1
F2S–U2512–10	28 – 4
F2S–U2519–80	28 – 5
F2S–U251D–10	28 – 13
F2S–U251E–10	28 – 16
F2S–U252E–11	28 – 8
F2S–U252F–11	28 – 10
F2S–U2624–00	31 – 24
F2S–U264L–01	31 – 33
F2S–U2663–00	25 – 5
F1W–U2664–01	30 – 3
F1K–U266B–00	25 – 38
	25 – 42
F2S–U266B–00	25 – 6
F2N–U266C–01	25 – 14
F2C–U266D–01	30 – 8
F2C–U266E–00	30 – 27
F1W–U269B–00	26 – 7
F2S–U270B–10	31 – 5
F2S–U271F–01	31 – 23
F2C–U2733–00	34 – 12
F2S–U278A–01	27 – 12
F2S–U278F–00	27 – 16
F2S–U278H–00	27 – 17
F2S–U316C–00	24 – 41
F2S–U351H–30	28 – 21
F2S–U351J–30	28 – 22
F2S–U351K–30	28 – 23
F2S–U351M–30	28 – 24
F2S–U351N–30	28 – 25
F2S–U3581–30	28 – 20
F2S–U370J–00	24 – 29
F2S–U370K–00	24 – 31
F2S–U371A–90	30 – 1
F2S–U371B–90	30 – 2
F2S–U372A–90	30 – 6
F2S–U372B–90	30 – 7
F2S–U375E–00	30 – 16
F1W–U3768–01	25 – 3
F1W–U3768–01	31 – 21
GH1–U3774–00	30 – 12
	31 – 6
F3J–U377B–00–P8	24 – 19
F3J–U377C–00–P8	24 – 24
F2C–U377H–00	27 – 14
F2C–U378C–00	30 – 18
F2S–U3844–00	24 – 6
F2C–U3850–00	30 – 4
	30 – 9
F3J–U4116–00	39 – 9
F1B–U411C–02	39 – 10
F1W–U4121–00	39 – 12
F4G–U413P–10	40 – 10
F1B–U415B–11	40 – 5
GP8–U416H–01	40 – 11
F2T–U417B–J0	39 – 1
F2T–U417C–J0	39 – 2
F2T–U417D–J0	39 – 3
F2T–U417E–J0	39 – 4
F2T–U417F–J0	39 – 5
F2T–U417G–J0	39 – 6
F2T–U417H–J0	39 – 7
F2T–U417J–J0	39 – 8
GJ3–U419E–00	40 – 9
F2S–U41B1–10	40 – 1
F1B–U41B1–21	40 – 2
F2S–U41B1–30	40 – 3
F0M–U41B2–11	40 – 4
F0V–U41DB–12	40 – 6
F2S–U41E1–10	40 – 8
F1B–U41F5–21	40 – 7
F2C–U4256–00	33 – 24
F2N–U4261–00	34 – 14
F2S–U475B–00	25 – 13
F2S–U475F–00	25 – 16
F1W–U491K–00	28 – 2
	28 – 9
	28 – 11
	28 – 14
	28 – 17
GP7–U4953–10	31 – 3
	31 – 14
	31 – 15
F2S–U510D–01	25 – 45
F2S–U5135–00	25 – 4
F2S–U513M–01–P8	25 – 35
F1W–U5148–00	25 – 9
F0X–U515E–01	24 – 5
F2S–U515N–01–P7	25 – 11
F2S–U5162–00	37 – 32
F3J–U516R–00	33 – 7
F2S–U517B–01–P8	25 – 1
F2S–U517C–01	25 – 32
F2S–U517D–00	25 – 19
F1X–U517E–01	24 – 4
	24 – 15
	24 – 21
	24 – 26
F2S–U517F–00	24 – 14
F2S–U517H–00	24 – 33
F2S–U518E–00	25 – 26
F2S–U518M–01–P7	31 – 22
F2S–U519D–00	24 – 36
F2S–U519D–20	31 – 25
F2S–U519G–02	25 – 2
F2S–U5554–02	24 – 1
F2S–U5633–00	24 – 44
F1K–U5772–04	24 – 49
	32 – 34
F2S–U590D–71	25 – 37
F2S–U590E–71	25 – 41
F2S–U591A–00	24 – 37
F2C–U591A–03	30 – 24
F2C–U591C–00	30 – 25
F1W–U591C–01	24 – 38
F1W–U591D–00	24 – 39
F2C–U591D–01	30 – 26
F1K–U5983–01	24 – 47
GD0–U7249–00–05	15 – 19
F1W–U725E–00	37 – 27
F1S–U725E–01	17 – 20
F2S–U72C0–01	17 – 3
6CS–U72M2–00	14 – 27
F2M–U732B–00	23 – 16
F2S–U732B–00	23 – 12
F2S–U732B–10	23 – 14
EU0–U7354–00–01	23 – 9
EU0–U7354–00–03	23 – 9
EU0–U7354–00–05	23 – 9
EU0–U7354–00–10	23 – 9
EU0–U7354–00–20	23 – 9
F1B–U751G–00	34 – 22
F2S–U7525–00	13 – 35
F1S–U7525–01	33 – 2
F2C–U753B–01	34 – 10
F2S–U753C–00	34 – 15
F1W–U7550–02	34 – 1
F2S–U7555–01	34 – 6
F2C–U7557–01	17 – 30
F2C–U755G–00	34 – 19
F2C–U7564–00	34 – 11
GJ1–U7578–21	35 – 8
F1S–U757B–01	34 – 21
F3J–U757E–00	17 – 35
F3J–U757F–00	17 – 36
F2N–U758D–00	34 – 18
F2S–U759B–00	32 – 38
F1K–U759C–00	24 – 42
	24 – 46
	32 – 40
	32 – 41
	34 – 16
GJ1–U759C–00	24 – 45
F1W–U759C–01	32 – 39
F1B–U761D–02	26 – 10
F1B–U7626–00	33 – 10
F1B–U7628–00	33 – 15
F3J–U7629–00	33 – 13
F1B–U7656–00	33 – 9
F1B–U7698–01	33 – 6
F2S–U7711–02	32 – 13
F1W–U771H–00	27 – 13
6ET–U773D–00	14 – 32
6CN–U773D–01	14 – 28
F1B–U7773–00	32 – 14
F2N–U7831–10	32 – 17
GP7–U7832–01	32 – 18
GP7–U7833–11	32 – 19
GP7–U7834–10	32 – 22
GP7–U7835–00	32 – 20
F2S–U7835–01	24 – 40
GP7–U783F–00	32 – 24
F2S–U7844–00	32 – 25
F0D–U7856–10	32 – 33
F0D–U785G–10	22 – 15
	32 – 31
F2H–U785H–00	32 – 28
F2N–U8169–00	27 – 11
F2S–U8211–00	22 – 8
EU0–U8217–H2	22 – 4
EU0–U821D–00	22 – 14
F1K–U8221–00	22 – 13
F1S–U8221–00	22 – 11

PART NO.	REF. NO.
F1S–U8221–00	34 – 2
	34 – 17
EU0–U8221–30	22 – 12
F1X–U822E–00	22 – 23
F3J–U822E–00	35 – 10
F2S–U8244–00	30 – 17
F2S–U8262–01–P0	24 – 17
F1W–U826C–00	22 – 25
F1K–U826C–03	26 – 25
F3J–U8285–00	35 – 12
F1X–U828E–01	24 – 2
F1S–U828H–01	26 – 15
F2P–U828K–00	24 – 48
F1W–U828M–00	17 – 8
	17 – 14
	17 – 17
	26 – 16
	29 – 7
	32 – 9
	33 – 23
	35 – 23
F1B–U8360–01	33 – 5
F3J–U8368–01	35 – 20
F1W–U8376–00	22 – 27
F1G–U8571–02	17 – 28
F1B–U8572–01	17 – 25
F1W–U8572–01	26 – 24
F2S–U8577–00	17 – 26
F2S–U8592–00	22 – 5
F2S–U8593–00	22 – 6
F2S–U883B–00	15 – 20
F2S–U883E–00	15 – 21
F2S–U883N–02	27 – 7
F2S–U883P–02	27 – 8
F2S–U883T–00	27 – 9
F2S–U890L–04	30 – 11
F2S–U890M–11	31 – 29
F2S–U890N–11	31 – 30
F2S–U89A1–01–P7	31 – 17
F1S–U8K31–02	17 – 4
6CR–W0001–01	41 – 1
6S5–W0001–22	41 – 21
6BH–W009A–03–94	2 – 1
6CR–W009B–11–94	3 – 4
90105–06028	1 – 2
90105–06035	2 – 18
90105–06184	10 – 6
90105–06185	10 – 7
90105–06903	21 – 10
90105–06M07	3 – 12
90105–07006	5 – 4
90105–07009	2 – 6
90105–08021	3 – 39
90105–08054	10 – 9
90105–08169	10 – 10
90105–08170	10 – 11
90105–08243	6 – 6
90105–08249	18 – 15
90105–08860	27 – 10
90105–10071	3 – 5
90109–06218	25 – 23
	25 – 30
90109–06268	3 – 38
90109–06832	15 – 22
90109–06874	23 – 10
90109–06875	23 – 11
90109–08041	17 – 34
90110–06040	27 – 6
	35 – 13
90110–06182	3 – 25
90110–06382	36 – 7
90110–06404	8 – 4
90110–06822	14 – 22
90110–08212	18 – 2
90116–08032	6 – 27
90119–05803	24 – 13
90119–05912	25 – 33
90119–06048	21 – 5
90119–06078	2 – 13
90119–06827	17 – 38
90119–06832	22 – 9
90119–06858	25 – 40
	25 – 44
90119–06880	24 – 10
	24 – 16
	24 – 20
	24 – 23
	24 – 25
	24 – 28
90119–06891	15 – 16
	16 – 3
90119–06893	14 – 5
90119–06895	25 – 25
90119–06897	14 – 11
90119–068B8	24 – 12
90119–069UH	25 – 27
90119–069UP	30 – 5
	30 – 10
90119–069UP	16 – 7
90119–06M35	20 – 6
	20 – 21
90119–06MA3	21 – 4
	21 – 24
90119–08034	12 – 4
	12 – 10
90119–08096	12 – 12
90119–08097	12 – 5
	12 – 9
90119–08823	17 – 24
	17 – 27
	17 – 29
	23 – 8
90119–08828	30 – 21
90119–08829	31 – 10
90119–08832	31 – 18
90119–08840	16 – 5
90119–08851	14 – 36
	14 – 42
	35 – 14
90119–08859	23 – 7
90119–08861	27 – 18
90119–089U7	17 – 31
90119–089UL	25 – 39
	25 – 43
90119–089UT	20 – 1
90119–089UU	15 – 18
	37 – 31
90119–08M22	7 – 3
	21 – 7
90119–10029	12 – 13
90119–10806	14 – 34
90119–10810	14 – 3
90149–06229	18 – 8
90149–10052	23 – 6
90150–05807	17 – 6
90154–06017	38 – 6
90154–06030	38 – 8
90169–049U1	32 – 21
90170–20802	14 – 19
90173–06015	20 – 19
90176–08080	6 – 28
90183–06902	25 – 7
90201–052E8	18 – 21
90201–06028	9 – 8
90201–06801	16 – 9
	16 – 12
90201–068G0	36 – 8
90201–068M4	14 – 40
90201–06906	35 – 6
90201–099U3	30 – 19
90201–10801	17 – 21
90201–109U6	30 – 13
	31 – 7
90201–12039	2 – 8
90267–329UR	32 – 23
90267–409U3	31 – 34
90267–409U5	35 – 21
90267–48020	25 – 28
90267–48802	26 – 17
	35 – 24
90267–48806	29 – 4
90267–48807	24 – 43
	25 – 10
90267–48825	28 – 19
90267–489U1	22 – 7
	22 – 26
	22 – 28
	24 – 50
	26 – 26
	32 – 35
	34 – 5
90267–489U2	23 – 13
	23 – 15
	23 – 17
	32 – 5
90267–489U6	17 – 11
	17 – 12
	17 – 15
	17 – 18
	25 – 36
	29 – 8
	32 – 7
	32 – 11
	33 – 25
	37 – 29
90267–489U8	26 – 12
	28 – 6
90269–08801	25 – 17
	25 – 18
90280–03047	18 – 10
90387–06080	17 – 37
90387–06119	1 – 8
90387–06119	20 – 8
	20 – 23
90387–06289	15 – 15
90387–06M05	18 – 22
90387–06M30	16 – 8
90387–08M06	14 – 37
	14 – 43
90387–08M30	16 – 6
90387–08M37	7 – 2
	21 – 6
90401–10040	5 – 23
90430–06232	10 – 8
90430–06M03	3 – 13
90430–08209	9 – 10
90430–10007	5 – 22
	41 – 7
90430–12002	17 – 32
90430–16910	33 – 19
90445–16013	13 – 31
90445–18012	13 – 14
90445–20800	26 – 4
90445–20804	26 – 1
90445–21806	13 – 1
90446–27M55	26 – 5
90446–27M73	26 – 2
90447–19005	13 – 15
90447–19011	13 – 28
90447–19017	6 – 24
90447–19018	13 – 23
90447–19801	13 – 7
90447–22011	13 – 10
90447–22015	11 – 2
90447–22016	11 – 6
90447–22801	13 – 2
90447–28004	33 – 12
	33 – 16
90447–28008	2 – 20
90450–17M17	6 – 25
90450–90002	7 – 4
	7 – 5
90450–99015	12 – 20
90450–99016	12 – 19
90450–99801	34 – 8
90450–99804	34 – 9
90464–09M47	20 – 20
90464–17800	32 – 12
90464–20008	21 – 25
90464–31001	21 – 27
90464–31002	21 – 28
90464–32801	17 – 7
	17 – 9
	17 – 16
	17 – 19
	22 – 20
	22 – 24
	26 – 18
	26 – 29
	32 – 10
	35 – 9
	35 – 22
	35 – 25
90464–35132	13 – 17
90464–40825	7 – 14
90464–99801	17 – 13
90464–99804	29 – 6
90465–11829	22 – 18
	32 – 29
	32 – 30
	32 – 32
90465–13M18	21 – 12
90465–14M66	20 – 35
90467–089U1	22 – 16
90467–14803	14 – 31
	33 – 14
	33 – 21
90467–150A1	3 – 36
	13 – 21
90467–150A5	13 – 6
90467–160A0	13 – 16
	13 – 24
	13 – 26
	13 – 29
	13 – 32
90467–170A5	13 – 30
90467–17802	34 – 13
90467–18804	26 – 6
90467–190A0	11 – 3
	11 – 4
90467–200A0	26 – 14
90467–200A3	11 – 8
	13 – 3
	13 – 11
	13 – 12
	13 – 19
90467–21800	26 – 11
90467–240A0	2 – 21

PART NO.	REF. NO.
90467–240A0	11 – 7
90467–25801	33 – 11
90467–26800	33 – 3
	33 – 17
	33 – 26
90480–19800	24 – 3
90480–20132	21 – 29
90480–22801	7 – 11
90480–22M15	7 – 1
	21 – 8
90601–118UF	14 – 29
	26 – 9
90601–152U3	15 – 23
90601–155U4	32 – 26
90601–170UG	34 – 7
90601–200U1	26 – 13
90605–502U1	25 – 15
90605–502U2	24 – 8
91314–06060	9 – 7
91317–05010	18 – 20
91317–06014	18 – 19
91380–04030	36 – 16
91380–06016	21 – 19
91380–06020	18 – 23
91380–06025	5 – 20
91809–16002	2 – 4
	2 – 5
92903–06600	2 – 10
92903–08600	6 – 9
	19 – 16
9290P–20600	14 – 18
92990–06100	19 – 17
92990–10600	21 – 14
92990–12200	17 – 33
	27 – 3
92995–06100	20 – 30
92995–06600	20 – 31
	21 – 17
92995–08600	3 – 15
9299R–05200	17 – 10
	26 – 22
	28 – 7
9299R–08200	26 – 28
	30 – 23
	31 – 12
	31 – 20
	31 – 28
9299R–10200	30 – 14

PART NO.	REF. NO.
9299R–10200	31 – 8
93101–31001	14 – 16
	41 – 27
93102–29008	15 – 5
	41 – 23
93102–29009	15 – 8
	41 – 24
93102–31009	14 – 15
	41 – 26
93210–06632	3 – 32
93210–11453	3 – 3
	41 – 4
93210–12016	3 – 37
	41 – 11
93210–18322	10 – 13
	41 – 10
93210–21631	8 – 6
	41 – 9
93210–22MF1	15 – 3
	41 – 22
93210–24M79	1 – 11
	41 – 12
93210–30611	14 – 25
	41 – 29
93210–32172	21 – 23
	41 – 17
93210–54010	14 – 21
	41 – 28
93306–00809	18 – 12
93306–20654	14 – 12
93306–20655	15 – 7
93306–30537	14 – 14
93410–12003	19 – 7
93450–24028	4 – 6
93450–66156	15 – 6
93604–10M03	3 – 8
	10 – 5
93606–12019	3 – 7
	8 – 3
	12 – 8
	14 – 6
	14 – 33
	15 – 14
93608–16M16	12 – 3
93700–06M03	15 – 10
94591–74152	5 – 14
94702–00427	21 – 11
95023–06012	6 – 31

PART NO.	REF. NO.
95024–06014	3 – 19
95024–06020	3 – 20
	9 – 12
95024–06035	9 – 11
95024–08035	12 – 16
95380–06700	19 – 18
9538R–06600	16 – 10
	16 – 13
9538R–06700	14 – 41
	35 – 7
95720–06300	25 – 24
	37 – 16
9572R–05300	26 – 23
9572R–06300	25 – 29
	25 – 31
	32 – 16
9572R–08300	26 – 27
	30 – 20
	30 – 22
	31 – 2
	31 – 11
	31 – 13
	31 – 19
	31 – 27
	35 – 15
	37 – 26
9572R–10300	17 – 22
	30 – 15
	31 – 9
95814–06012	20 – 33
95814–06016	3 – 30
95814–06030	5 – 17
95814–06035	3 – 23
95814–06070	3 – 6
95814–08020	3 – 29
	9 – 9
95817–06014	9 – 6
95824–06025	1 – 9
97013–06055	2 – 9
97013–08025	6 – 8
97013–08030	19 – 15
97080–08035	37 – 25
97095–06012	20 – 29
97095–06016	21 – 16
97095–08040	3 – 14
97513–05514	18 – 9
97513–08535	6 – 26
97513–10525	2 – 15

PART NO.	REF. NO.
97595–06514	20 – 18
97780–30610	36 – 15
97780–60516	7 – 10
97780–60520	20 – 25
9778R–50010	25 – 34
9788R–05025	26 – 21
99009–72500	18 – 14
99530–10114	3 – 2
	3 – 26
	18 – 16
99590–14016	14 – 2
99780–12600	27 – 2