YAMAHA

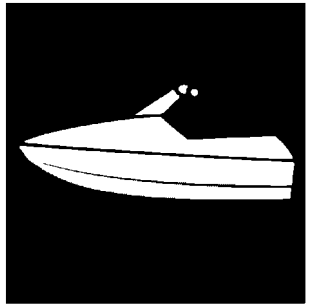

PARTS CATALOGUE

WaveRunner SuperJet

SJ700B-S (F4DA /6BAM/6BA1)

SJ700B-S (F4DB /6BAN/6BA1)

1SF4D-100E1

( )

SJ700B-S
PARTS CATALOGUE
©2016 by Yamaha Motor Co., Ltd.
1st edition, May 2016
All rights reserved.
Any reprinting or unauthorized use
without the written permission of
Yamaha Motor Co., Ltd.
is expressly prohibited.
Printed in Japan.

FOREWORD

This Parts Catalogue is related to the parts for the model(s) on the cover page. When you are ordering replacement parts, please refer to this Parts Catalogue and quote both part numbers and part names correctly.

1. Modifications or additions which have been made after the issue of the Parts Catalogue will be announced in the Parts News.
   It is advisable that you make the necessary corrections to the Parts Catalogue according to the Parts News.

2. Abbreviations
   The following abbreviations are used in this Parts Catalogue.

   "UR" Use specified parts number.

   "UN" Use as many as needed.

   "AP" Alternate Parts

   "LM" Locally Made (Parts need to be ordered locally)

   "F#" Frame No. (Applicable machine No.)

   "O/S" Over Size

3. The number of components for assembly
   - Parts, which are to be supplied in an assembly, are listed with a dot (.) in front of the part name as shown below.
   - The numeral appearing to the right of each component part indicates the quantity of parts for each assembly unit.

PART NO.	DESCRIPTION	Q'TY	REMARKS
2F5–83310–60	FRONT FLASHER LIGHT ASSY	2	
115–83311–60	.BULB (6V–18W)	1	

4. Applicable colours of graphics are represented in the "REMARKS" as shown below.

PART NO.	DESCRIPTION	Q'TY	REMARKS
2N4–24110–00–X5	FUEL TANK COMP.	2	MXR
3J1–24240–10	.GRAPHIC, FUEL TANK	1	FOR MXR

5. Note that the illustrations for reference in finding parts numbers are not to be used for assembling. When assembling, please use the applicable service manual.

6. The asterisk (*) before a reference number indicates modified items after the first edition.

7. Applicable Serial No.

Engine Serial No.

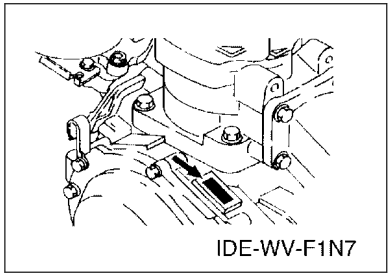

Primary Identification No.

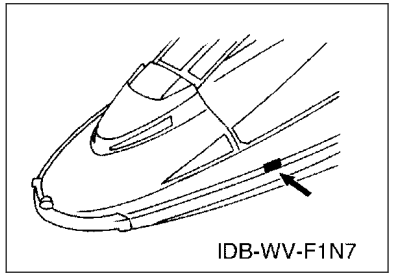

8. Applicable Colour Code (The (*) mark shows Model colour.)

Abbreviation	Colour Name	Colour Code
NMC(*)	GRAY METALLIC C	008S
SS4(*)	BLACK SOLID 4	008P
WC2(*)	WHITE COAT 2	GA3C

9. Quantity Column Information

Column No.	Name Of Q'ty Column	Destination
1	F4DA	OCEANIA
2	F4DB	EUROPE

10. Applicable Starting Serial No.

Engine Serial No.

Serial No.	Name Of Q'ty Column	Model Code

Primary Identification No.

Serial No.	Name Of Q'ty Column	Model Code
F4D-0517415	F4DA	F4DA
F4D-0517415	F4DB	F4DB

CONTENTS

CYLINDER & CRANKCASE.....1
CRANKSHAFT & PISTON.....3
INTAKE.....5
CARBURETOR.....7
EXHAUST 1.....9
FUEL.....12
JET UNIT 1.....14
JET UNIT 2.....16
GENERATOR.....17
STARTING MOTOR.....19
ELECTRICAL 1.....20
ELECTRICAL 2.....22
ENGINE HATCH.....23
HULL & DECK.....25
GUNWALE & MAT.....26
FUEL TANK.....27
EXHAUST 2.....29
CONTROL CABLE.....30
STEERING 1.....31
STEERING 2.....33
GRAPHICS.....35
IMPORTANT LABELS.....36
REPAIR KIT 1.....37
REPAIR KIT 2.....38

INDEX

NUMERICAL INDEX.....39

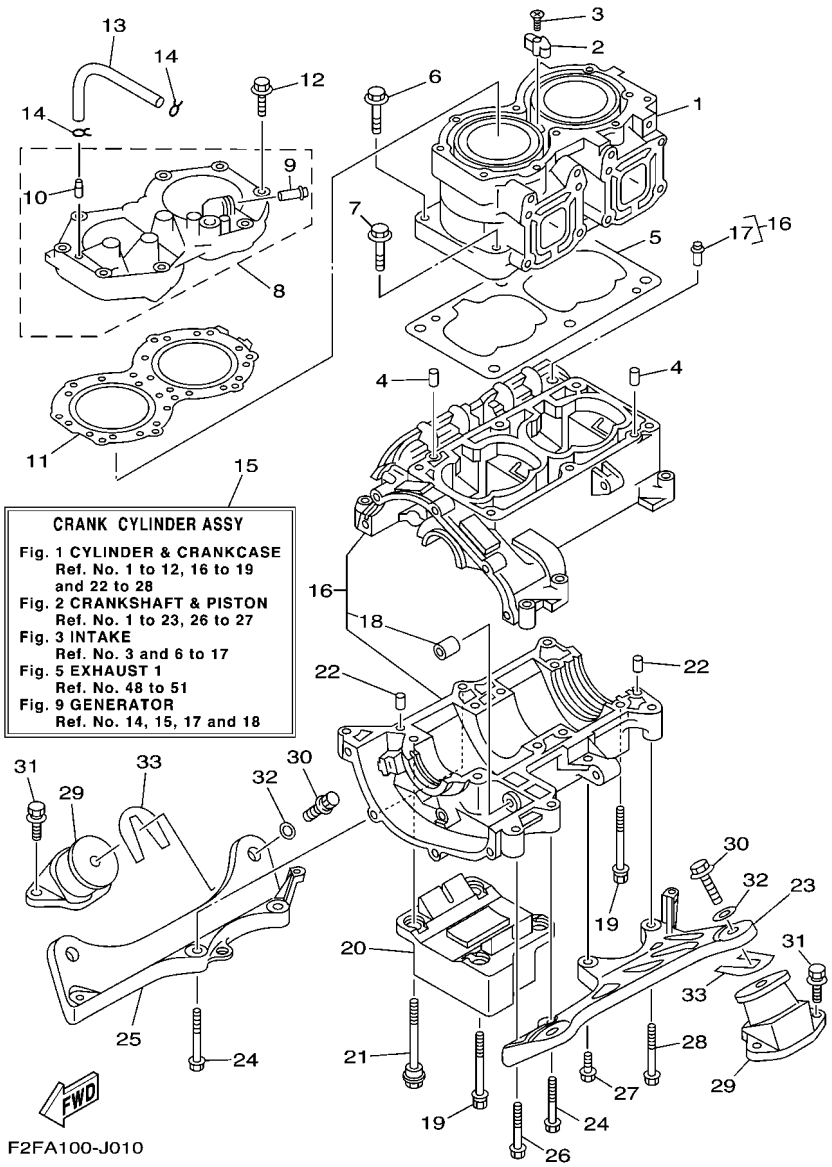

FIG. 1 CYLINDER & CRANKCASE

REF. NO.	PART NO.	DESCRIPTION	F4DA	F4DB				REMARKS
1	61X–11311–01–8S	CYLINDER 1	1	1				
2	6E5–11325–00	ANODE	1	1				
3	98780–04015	SCREW, FLAT HEAD	1	1				
4	93606–12019	PIN, DOWEL	2	2				
5	6M6–11351–A2	GASKET, CYLINDER	1	1				
6	90119–10M56	BOLT, WITH WASHER	4	4				
7	90119–10M07	BOLT, WITH WASHER	2	2				
8	64U–11111–00–8S	HEAD, CYLINDER 1	1	1				
9	6K8–51129–00	.NIPPLE	1	1				
10	6R7–14485–00	.PIPE, JOINT	1	1				
11	62T–11181–01	GASKET, CYLINDER HEAD 1	1	1				
12	90119–08M96	BOLT, WITH WASHER	10	10				
13	90445–07M19	HOSE (L200)	1	1				
14	90467–06016	CLIP	2	2				
15	64V–W0090–02–8S	CRANK CYLINDER ASSY	1	1				
16	62T–15100–00–8S	CRANKCASE ASSY	1	1				
17	62T–14251–10	.NIPPLE	1	1				
18	90380–12M29	.BUSH, SOLID	1	1				
19	90119–08M55	BOLT, WITH WASHER	5	5				
20	6BA–44532–00	STOPPER, UPPER MOUNT	1	1				
21	90109–08M56	BOLT	3	3				
22	93606–12019	PIN, DOWEL	2	2				
23	6R7–21415–01–94	BRACKET, FRONT UPPER 1	1	1				
24	90119–10M02	BOLT, WITH WASHER	4	4				
25	6R7–21425–01–94	BRACKET, REAR UPPER 1	1	1				
26	90119–10M01	BOLT, WITH WASHER	1	1				
27	90119–10M00	BOLT, WITH WASHER	1	1				

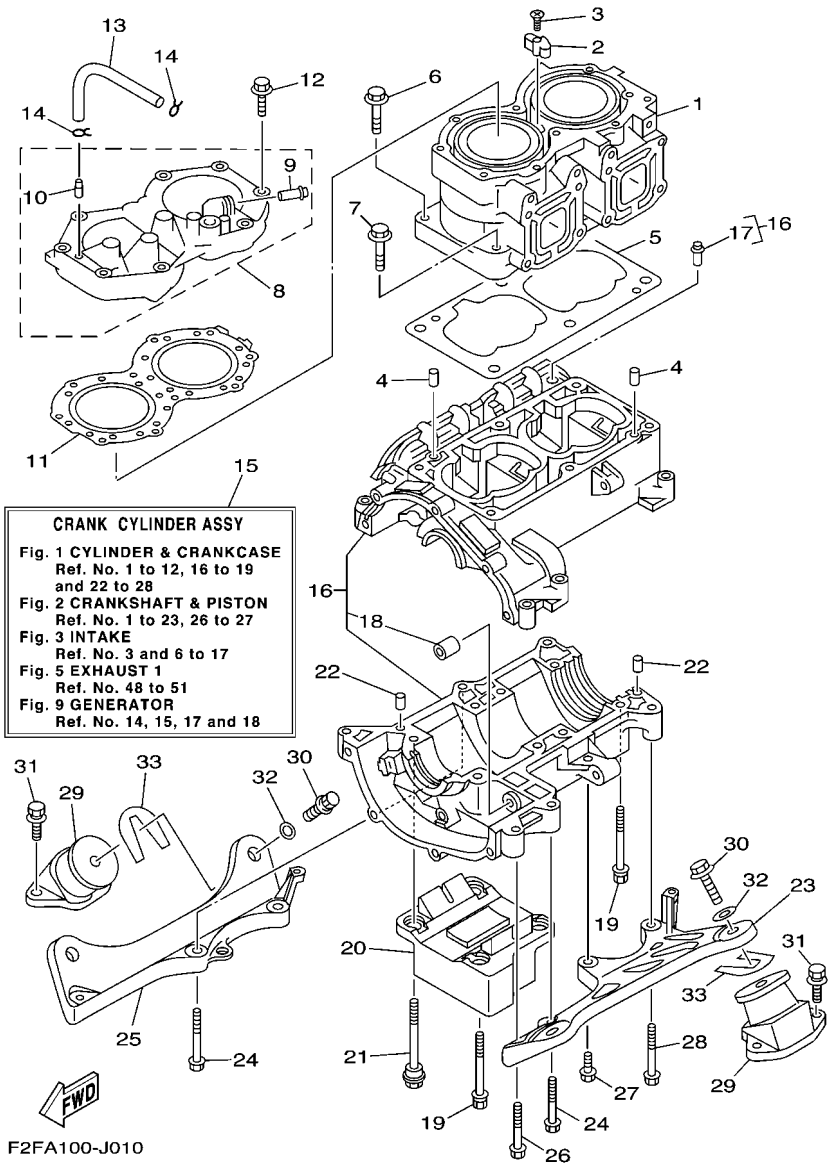

FIG. 1 CYLINDER & CRANKCASE

REF. NO.	PART NO.	DESCRIPTION	F4DA	F4DB				REMARKS
28	90119–10M03	BOLT, WITH WASHER	1	1				
29	6R7–44517–00–8S	MOUNT RUBBER	4	4				
30	90119–08904	BOLT, WITH WASHER	4	4				
31	90119–08038	BOLT, WITH WASHER	8	8				
32	EU0–67324–00	PLATE	4	4				
33	EU0–67354–C0	SHIM (T=0.5)	10	10				UN
	EU0–67354–D0	SHIM (T=1.0)	10	10				UN
	EU0–67354–E0	SHIM (T=2.0)	10	10				UN

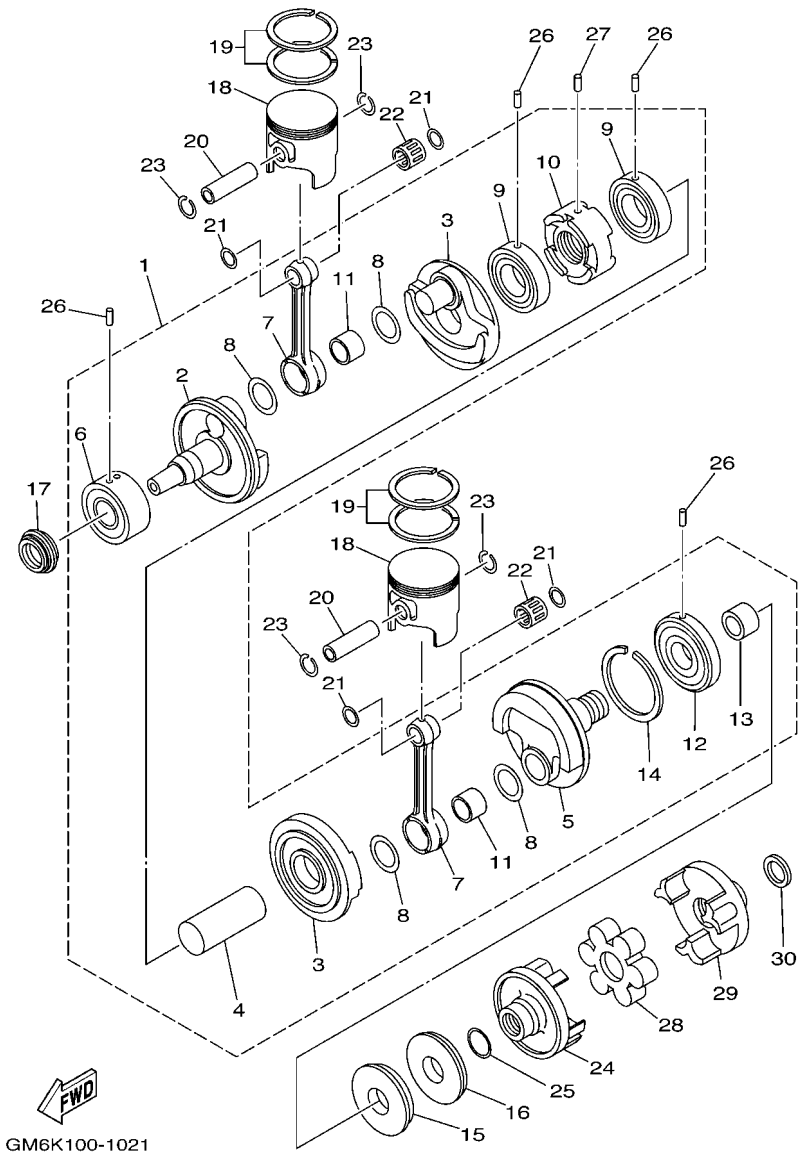

FIG. 2 CRANKSHAFT & PISTON

REF. NO.	PART NO.	DESCRIPTION	F4DA	F4DB				REMARKS
1	61X–11400–03	CRANKSHAFT ASSY	1	1				
2	6M6–11412–00	.CRANK 1	1	1				
3	6M6–11422–00	.CRANK 2	2	2				
4	6M6–11431–10	.CRANK 3	1	1				
5	6M6–11442–01	.CRANK 4	1	1				
6	93305–30601	.BEARING	1	1				
7	64X–11651–01	.ROD, CONNECTING	2	2				
8	82M–11685–00	.WASHER, CRANK PIN	4	4				
9	93306–207U2	.BEARING	2	2				
10	65U–11515–00	.SEAL, LABYRINTH 1	1	1				
11	93310–525U0	.BEARING	2	2				
12	93306–307U3	.BEARING	1	1				
13	62T–45526–00	.COLLAR, DRIVE SHAFT	1	1				
14	93440–80023	.CIRCLIP	1	1				
15	93102–36M33	OIL SEAL	1	1				
16	93101–36M46	OIL SEAL	1	1				
17	93103–32M01	OIL SEAL	1	1				
18	61X–11631–02–93	PISTON (STD)	2	2				
	61X–11635–02	PISTON (0.25MM O/S)	2	2				AP
	61X–11636–02	PISTON (0.50MM O/S)	2	2				AP
19	61X–11603–01	PISTON RING SET (STD)	2	2				
	61X–11604–01	PISTON RING SET (0.25MM O/S)	2	2				AP
	61X–11605–01	PISTON RING SET (0.50MM O/S)	2	2				AP
20	61X–11633–00	PIN, PISTON	2	2				
21	90201–20M04	WASHER, PLATE	4	4				
22	93310–320U2	BEARING	2	2				
23	93450–21053	CIRCLIP	4	4				

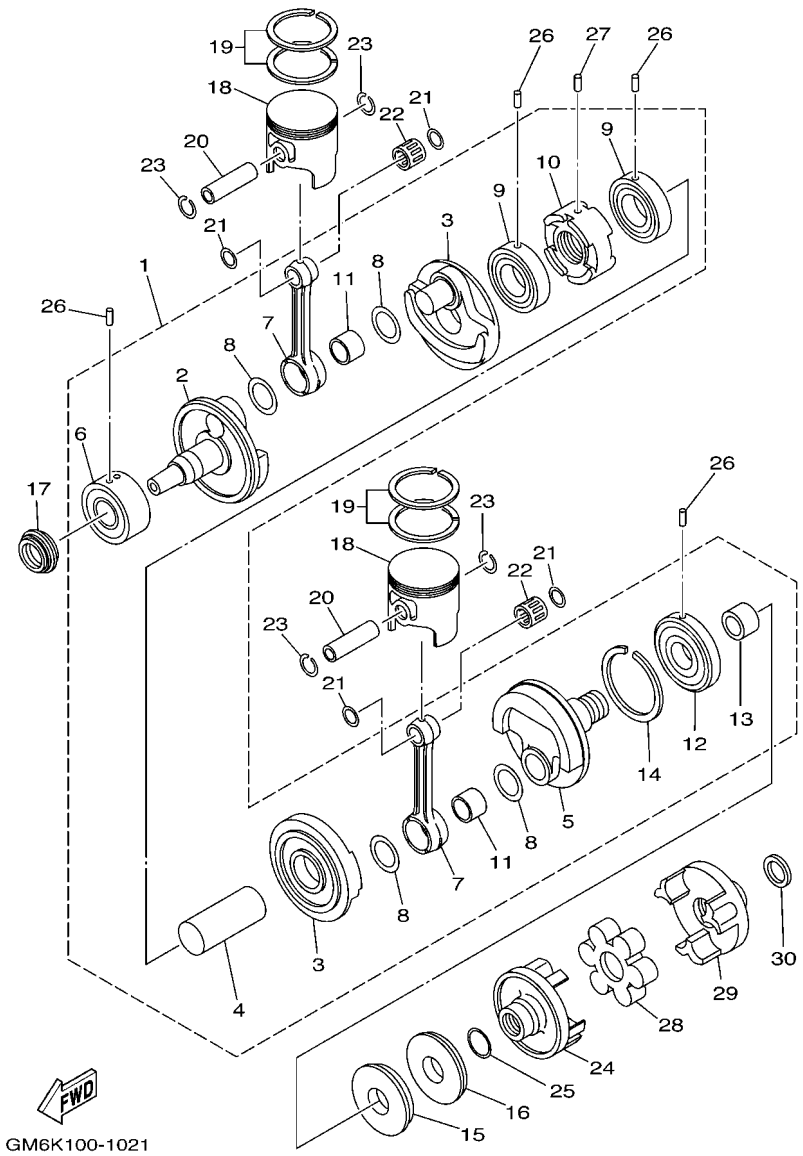

FIG. 2 CRANKSHAFT & PISTON

REF. NO.	PART NO.	DESCRIPTION	F4DA	F4DB				REMARKS
24	6M6–45813–32–8P	FLANGE, COUPLING	1	1				
25	62T–45127–00	SEAL	1	1				
26	93603–10049	PIN, DOWEL	4	4				
27	93604–07141	PIN, DOWEL	1	1				
28	61X–4581J–00	RUBBER SHAFT COUPLING	1	1				
29	6M6–45813–22–8P	FLANGE, COUPLING	1	1				
30	90201–24M02	WASHER, PLATE	1	1				

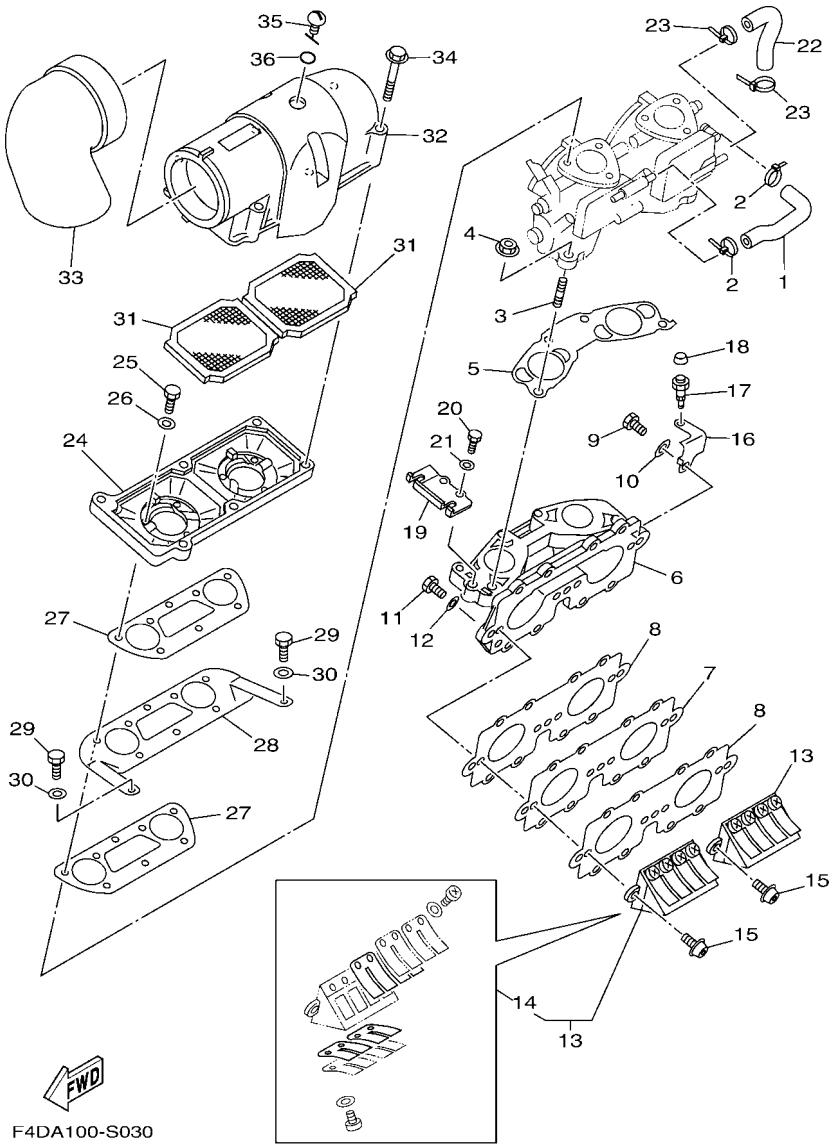

FIG. 3 INTAKE

REF. NO.	PART NO.	DESCRIPTION	F4DA	F4DB				REMARKS
1	62T–24313–01	PIPE 3	1	1				
2	90465–11M10	CLAMP	2	2				
3	90116–08M60	BOLT, STUD	4	4				
4	90179–08M15	NUT	4	4				
5	62T–13556–00	GASKET, MANIFOLD	1	1				
6	62T–13555–00–94	MANIFOLD, INTAKE	1	1				
7	62T–13624–00	PLATE,REED VALVE	1	1				
8	62T–13566–00	GASKET	2	2				
9	97013–06035	BOLT	3	3				
10	92903–06600	WASHER, PLATE	3	3				
11	97013–06025	BOLT	8	8				
12	92903–06600	WASHER, PLATE	8	8				
13	62T–13610–00	REED VALVE ASSY	2	2				
14	62T–W0004–00	.REED SET	1	1				
15	90111–05037	BOLT,HEX. SOCKET BUTTON	4	4				
16	62T–14243–01	PLATE	1	1				
17	61L–5169A–00	NIPPLE, GREASE	1	1				
18	663–45119–00	CAP, GREASE NIPPLE	1	1				
19	62T–14527–02	PLATE	1	1				
20	97013–06016	BOLT	2	2				
21	92903–06600	WASHER, PLATE	2	2				
22	62T–24314–01	PIPE 4	1	1				
23	90465–11M10	CLAMP	2	2				
24	62T–14284–10–8S	COVER, CARBURETOR 2	1	1				
25	97013–06020	BOLT	6	6				
26	92903–06600	WASHER, PLATE	6	6				
27	62T–13674–00	GASKET, AIR COOLER COVER 1	2	2				

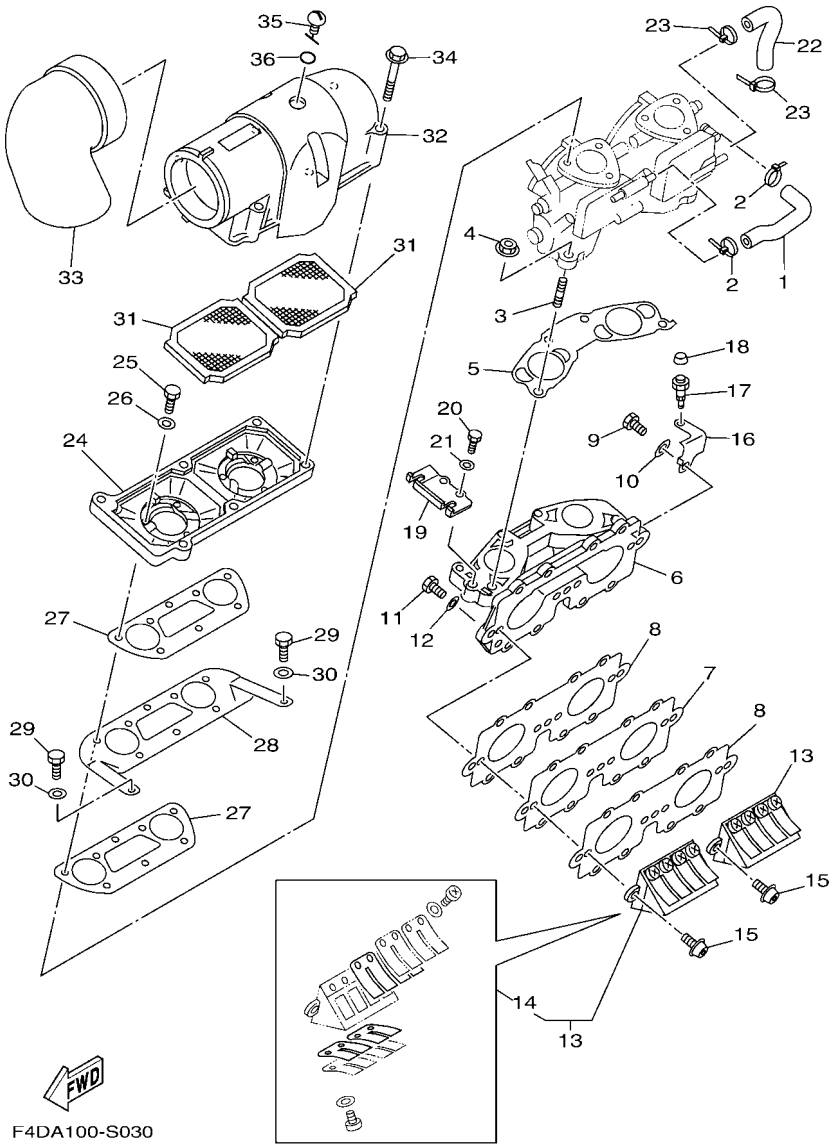

FIG. 3 INTAKE

REF. NO.	PART NO.	DESCRIPTION	F4DA	F4DB				REMARKS
28	62T–14255–00	PLATE	1	1				
29	97013–06012	BOLT	2	2				
30	92903–06600	WASHER, PLATE	2	2				
31	62T–14451–00	ELEMENT, AIR CLEANER	2	2				
32	62T–14283–01	COVER, CARBURETOR 1	1	1				
33	62T–14419–00	PIPE	1	1				
34	90119–05M02	BOLT, WITH WASHER	6	6				
35	62T–14435–00	GROMMET	1	1				
36	93210–13M63	O-RING	1	1				

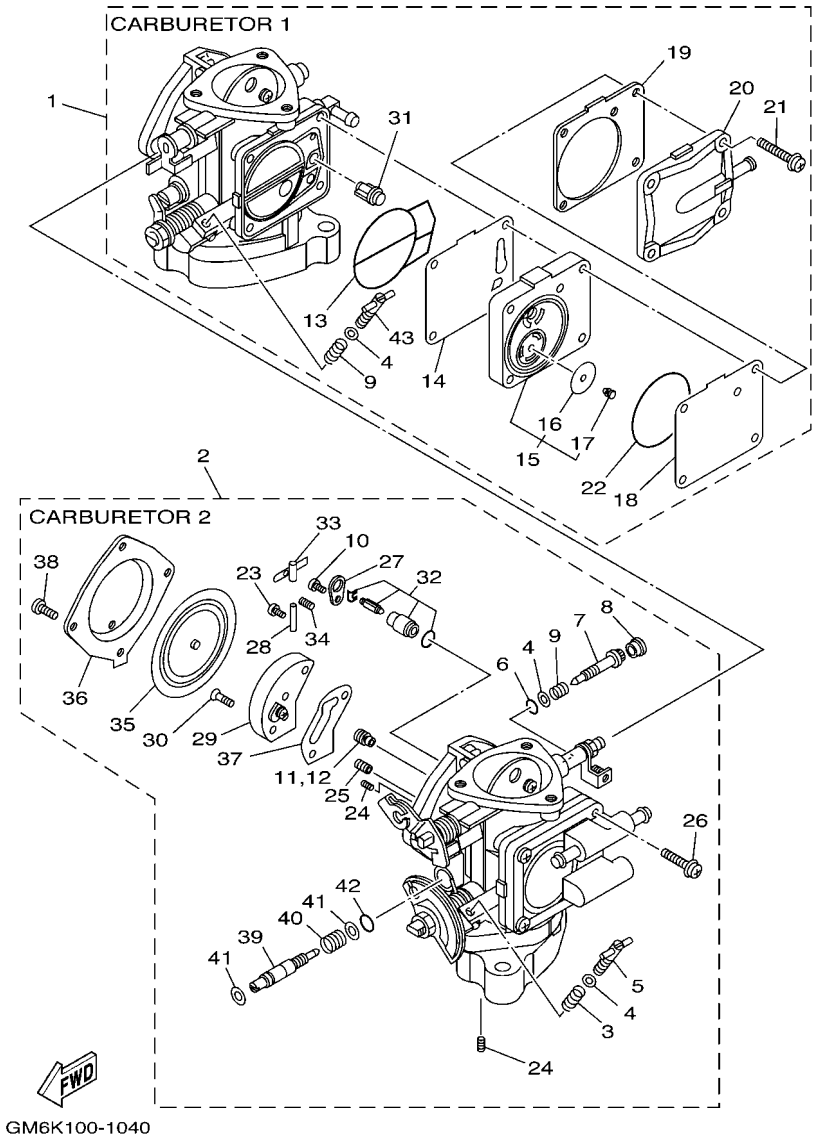

FIG. 4 CARBURETOR

REF. NO.	PART NO.	DESCRIPTION	F4DA	F4DB				REMARKS
1	64U–14301–03	CARBURETOR ASSY 1	1	1				
2	64U–14302–03	CARBURETOR ASSY 2	1	1				
3	47X–14133–00	.SPRING, THROTTLE STOP	1	1				CARBURETOR 2
4	812–14235–00	.WASHER, NEEDLE	4	4				
5	6M6–14521–01	.SCREW, ADJUST	1	1				CARBURETOR 2
6	812–14147–00	.O-RING	2	2				
7	63M–14946–00	.PLATE, NEEDLE FITTING	2	2				
8	6K8–14471–10	.CAP, CARBURETOR	2	2				
9	3KW–14932–00	.SPRING, THROTTLE 2	3	3				
10	6M6–14503–00	.SCREW	2	2				
11	3G2–14231–26	.JET, MAIN (#130)	1	1				CARBURETOR 1
12	3G2–14231–26	.JET, MAIN (#130)	1	1				CARBURETOR 2
13	6K8–14564–00	.O-RING	2	2				
14	6K8–24411–20	.DIAPHRAGM	1	1				CARBURETOR 1
15	6M6–24413–02	.BODY 2	1	1				CARBURETOR 1
16	65U–24421–00	..VALVE, CHECK	2	2				CARBURETOR 1
17	65U–24492–00	..BUSH, FUEL PUMP	2	2				CARBURETOR 1
18	6K8–24421–10	.VALVE, CHECK	1	1				CARBURETOR 1
19	6K8–24431–20	.GASKET, FUEL PUMP 1	1	1				CARBURETOR 1
20	6K8–24452–10	.COVER	1	1				CARBURETOR 1
21	97980–05330	.SCREW, WITH WASHER	4	4				CARBURETOR 1
22	6K8–14563–00	.O-RING	1	1				CARBURETOR 1
23	6K8–14503–02	.SCREW	2	2				
24	6K8–14521–10	.SCREW	4	4				
25	830–14231–14	.JET, MAIN (# 70)	2	2				
26	98580–05018	.SCREW, PAN HEAD	4	4				CARBURETOR 2
27	6K8–14527–11	.PLATE	2	2				

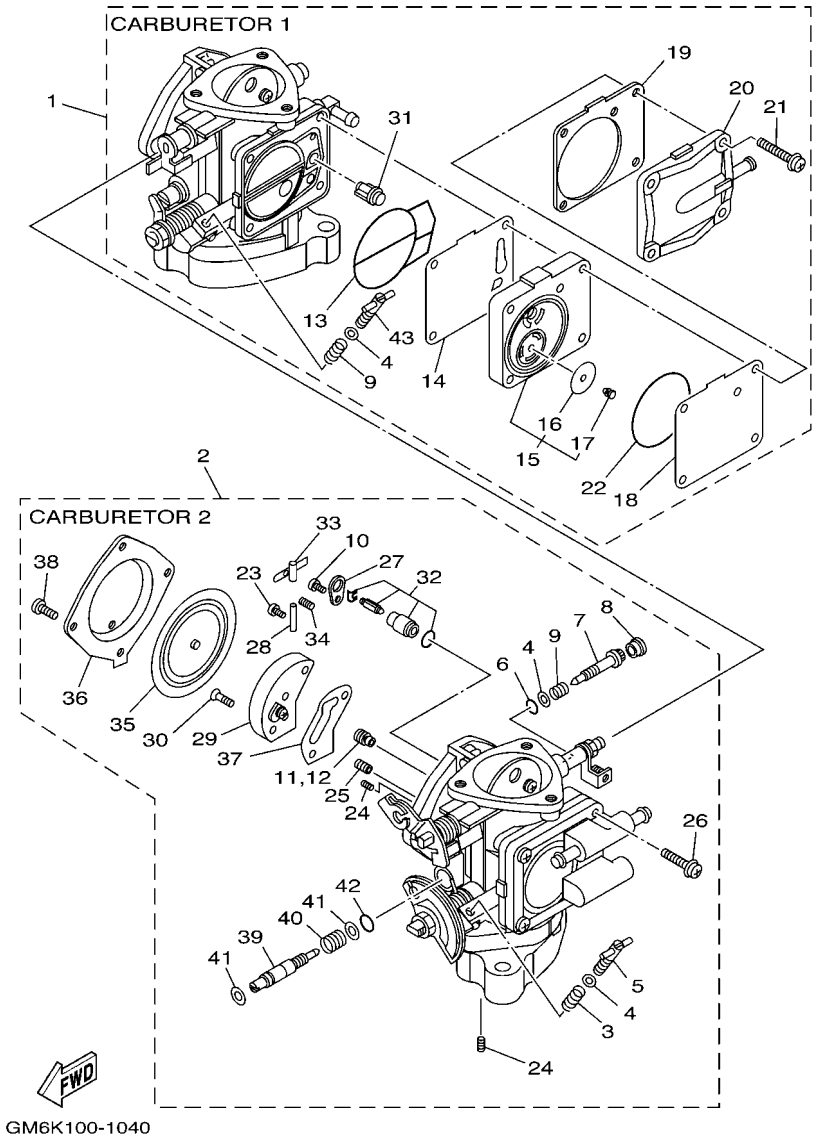

FIG. 4 CARBURETOR

REF. NO.	PART NO.	DESCRIPTION	F4DA	F4DB				REMARKS
28	439–14186–00	.PIN, FLOAT	2	2				
29	6R7–24412–02	.BODY 1	2	2				
30	6K8–14523–11	.SCREW, STOP	4	4				
31	6R7–14569–00	.STRAINER	2	2				
32	61X–14916–16	.JET NEEDLE COMP.	2	2				
33	6K8–14547–01	.ARM, FLOAT	2	2				
34	6R7–14253–00	.SPRING	2	2				
35	6R7–14541–00	.DIAPHRAGM, PUMP	2	2				
36	6R7–14542–00	.BODY, PUMP 1	2	2				
37	6K8–14536–11	.GASKET	2	2				
38	97880–05012	.SCREW, PAN HEAD	8	8				
39	64U–14923–00	.SCREW, PILOT	2	2				
40	6K8–14589–00	.SPRING	2	2				
41	822–14235–00	.WASHER, NEEDLE	4	4				
42	583–14561–00	.O-RING	2	2				
43	6K8–14521–01	.SCREW, ADJUST	1	1				CARBURETOR 1

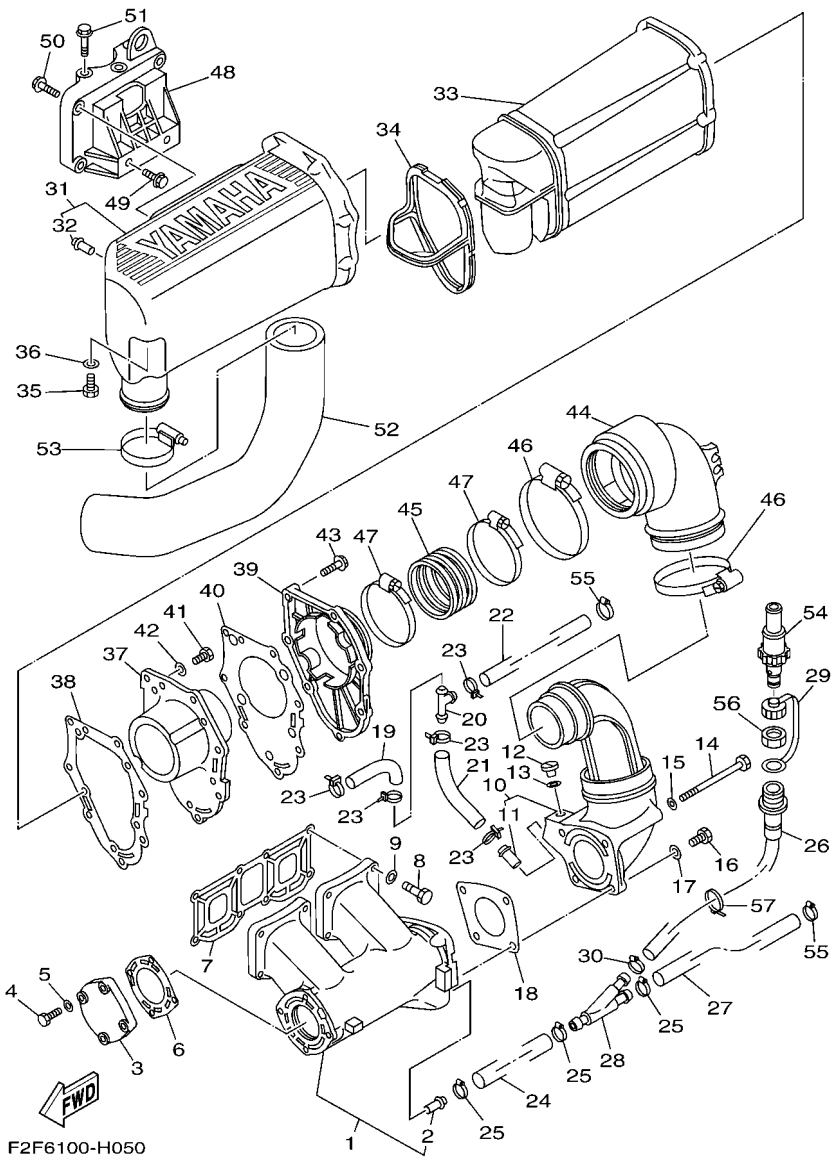

FIG. 5 EXHAUST 1

REF. NO.	PART NO.	DESCRIPTION	F4DA	F4DB				REMARKS
1	61X–14711–02–94	MUFFLER 1	1	1				
2	6K8–51129–00	.NIPPLE	1	1				
3	6M6–14718–01–8S	PROTECTOR, MUFFLER 1	1	1				
4	97013–06025	BOLT	4	4				
5	92903–06600	WASHER, PLATE	4	4				
6	6M6–14739–A2	GASKET, MUFFLER DAMPER 1	1	1				
7	61X–14613–A1	GASKET, EXHAUST PIPE	1	1				
8	97013–08035	BOLT	8	8				
9	92903–08600	WASHER, PLATE	8	8				
10	61L–14712–00–94	RING, JOINT	1	1				
11	6K8–51129–00	.NIPPLE	1	1				
12	90340–08002	PLUG, STRAIGHT SCREW	1	1				
13	90430–08003	GASKET	1	1				
14	97013–08090	BOLT	2	2				
15	92903–08600	WASHER, PLATE	2	2				
16	97013–08025	BOLT	2	2				
17	92903–08600	WASHER, PLATE	2	2				
18	6R7–14749–A1	GASKET, MUFFLER DAMPER 2	1	1				
19	90445–14M29	HOSE (L125)	1	1				
20	6E5–24378–00	PIPE, JOINT 3	1	1				
21	90445–14M29	HOSE (L125)	1	1				
22	90445–14M33	HOSE (L1150)	1	1				
23	90465–11M10	CLAMP	5	5				
24	90445–14M14	HOSE (L330)	1	1				
25	90450–14M05	HOSE CLAMP ASSY	3	3				
26	63M–12580–00	JOINT ASSY	1	1				
27	90445–14M05	HOSE (L240)	1	1				

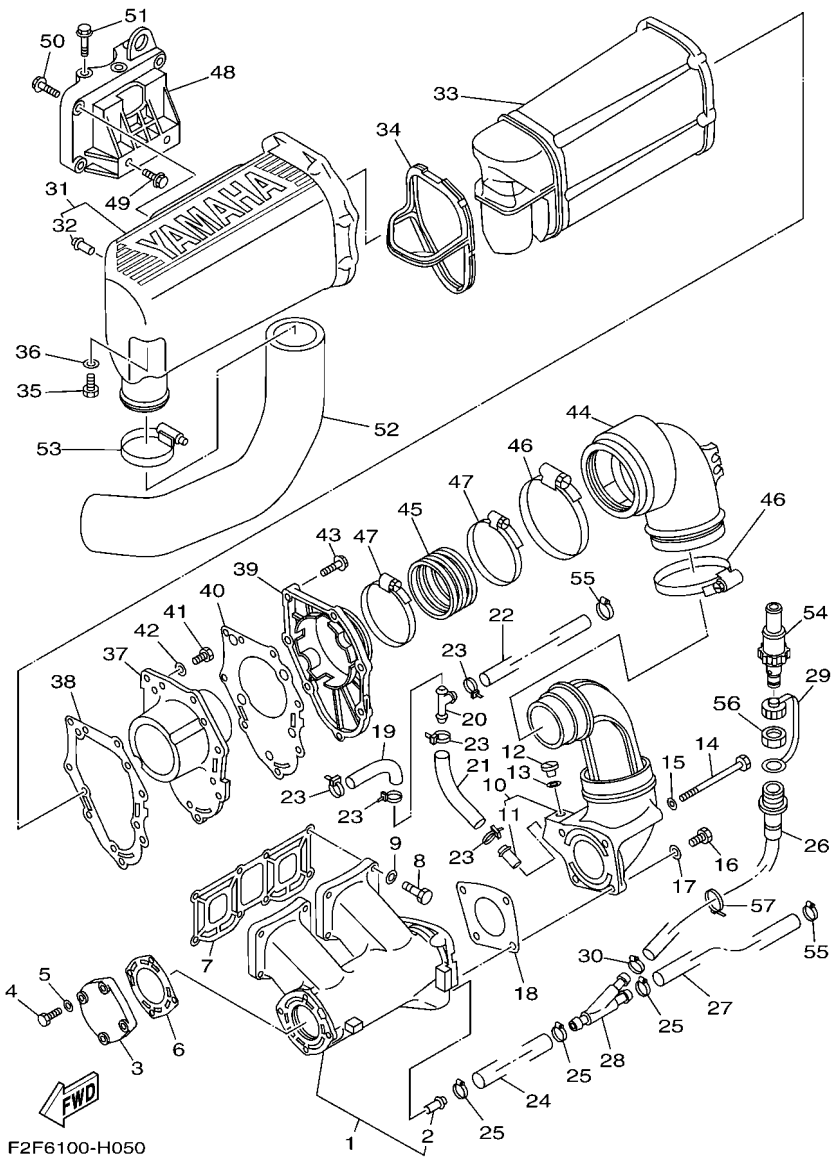

FIG. 5 EXHAUST 1

REF. NO.	PART NO.	DESCRIPTION	F4DA	F4DB				REMARKS
28	64X–12581–00	JOINT, HOSE 1	1	1				
29	682–84385–01	CAP,1	1	1				
30	90450–18M09	HOSE CLAMP ASSY	1	1				
31	6R7–14721–00–8S	MUFFLER 2	1	1				
32	6R7–14485–00	.PIPE, JOINT	1	1				
33	6R7–14753–00–8S	SILENCER, EXHAUST	1	1				
34	6R7–15761–00	SEAL, RUBBER 1	1	1				
35	97013–06020	BOLT	1	1				
36	92903–06600	WASHER, PLATE	1	1				
37	6R7–14785–00–8S	DIFFUSER	1	1				
38	6R7–14755–A0	GASKET, SILENCER	1	1				
39	6R7–41113–00–8S	OUTER COVER, EXHAUST	1	1				
40	6R7–41114–A0	GASKET, EXHAUST OUTER COVER	1	1				
41	97095–06016	BOLT	5	5				
42	92995–06600	WASHER	5	5				
43	90119–06MA1	BOLT, WITH WASHER	7	7				
44	61L–14615–00	JOINT, EXHAUST 1	1	1				
45	61L–14625–A0	JOINT, EXHAUST 2	1	1				
46	90460–90M11	CLAMP, HOSE	2	2				
47	90460–70M16	CLAMP, HOSE	2	2				
48	6M6–14771–00–94	STAY, MUFFLER 1	1	1				
49	90105–10M49	BOLT, FLANGE	2	2				
50	90105–10M88	BOLT, FLANGE	3	3				
51	90119–10M17	BOLT, WITH WASHER	3	3				
52	64V–14752–00	PIPE, OUTLET	1	1				
53	90460–64M15	CLAMP, HOSE	1	1				
54	67X–E2590–10	CONDUCTION ASSY	1	1				

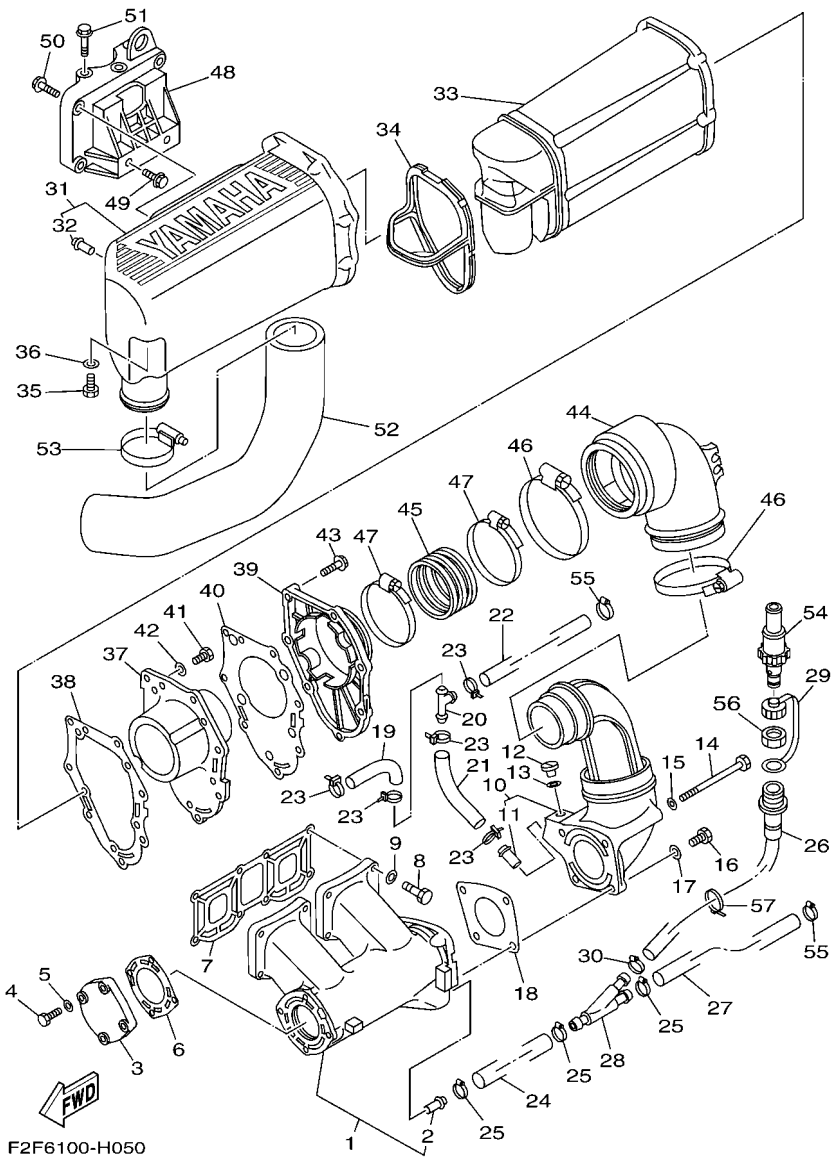

FIG. 5 EXHAUST 1

REF. NO.	PART NO.	DESCRIPTION	F4DA	F4DB				REMARKS
55	90450–14M05	HOSE CLAMP ASSY	2	2				
56	EU0–61652–00	NUT	1	1				
57	90601–20024	BAND	1	1				

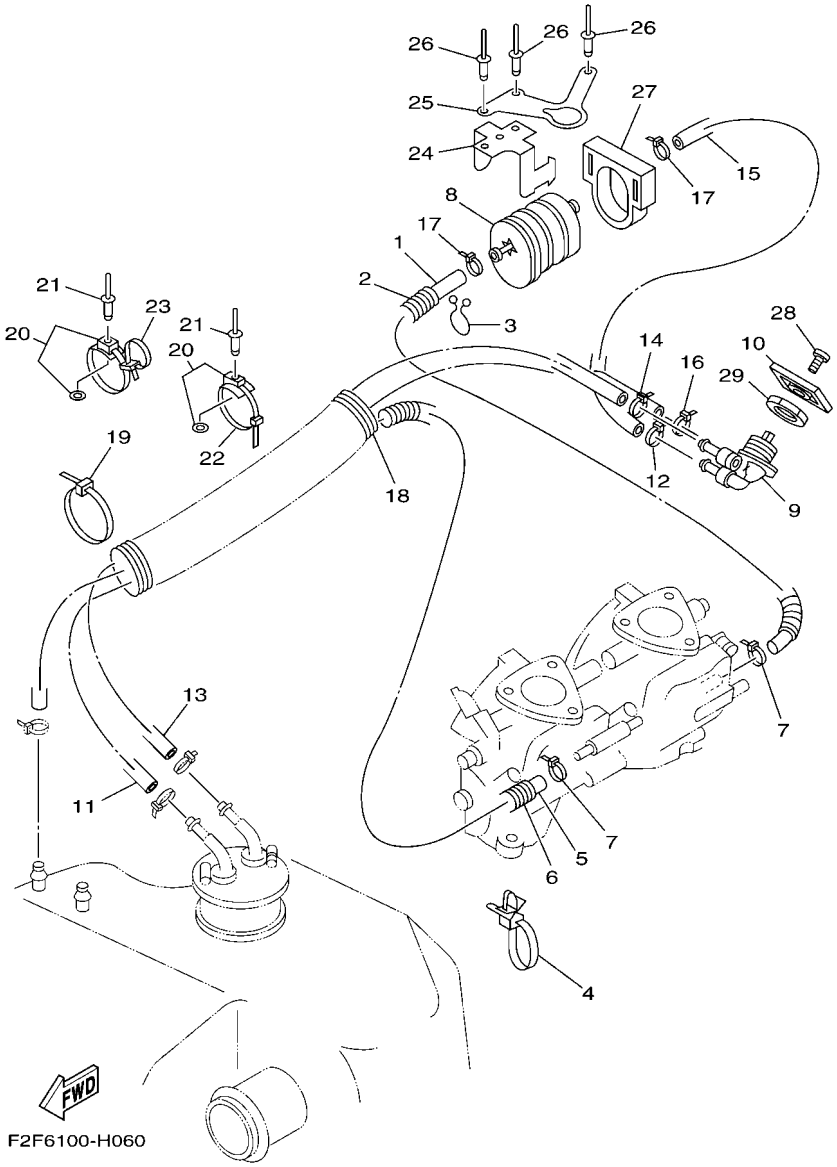

FIG. 6 FUEL

REF. NO.	PART NO.	DESCRIPTION	F4DA	F4DB				REMARKS
1	90445–10ME8	HOSE (L230)	1	1				
2	90446–14M23	HOSE (L180)	1	1				
3	90464–08M07	CLAMP	1	1				
4	90465–12M56	CLAMP	1	1				
5	90445–10MF1	HOSE (L1220)	1	1				
6	90446–14M64	HOSE (L560)	1	1				
7	90465–11M10	CLAMP	2	2				
8	6K8–24560–21	FILTER ASSY	1	1				
9	6K8–24500–02	FUEL COCK ASSY 1	1	1				
10	6R7–24524–00	LEVER, COCK	1	1				
11	90445–10ME3	HOSE (L1010)	1	1				
12	90465–11M10	CLAMP	1	1				
13	90445–10M98	HOSE (L1010)	1	1				
14	90465–11M10	CLAMP	1	1				
15	90445–10ME4	HOSE (L140)	1	1				
16	90465–11M10	CLAMP	1	1				
17	90465–11M10	CLAMP	2	2				
18	GM6–6773E–00	TUBE,2	1	1				
19	90601–20006	BAND	1	1				
20	90600–91736	CLAMP COMP.	7	7				
21	90267–48925	RIVET, BLIND	7	7				
22	90601–20006	BAND	6	6				
23	90601–20016	BAND	2	2				
24	EU0–67816–30	BRACKET, FUEL FILTER	1	1				
25	F1N–65938–00	STAY 1	1	1				
26	90267–48940	RIVET, BLIND	3	3				
27	EU0–67817–00	HOLDER	1	1				

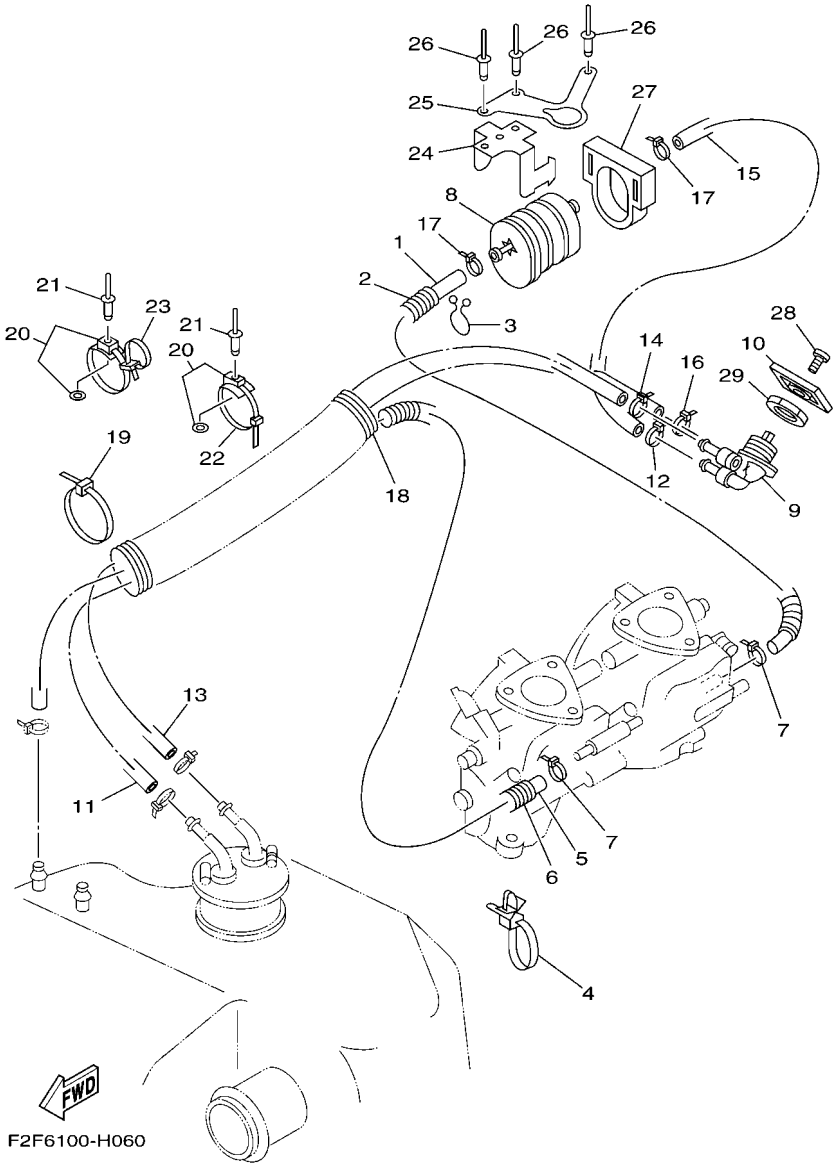

FIG. 6 FUEL

REF. NO.	PART NO.	DESCRIPTION	F4DA	F4DB				REMARKS
28	98980–04008	SCREW, BIND	1	1				
29	90170–22187	NUT	1	1				

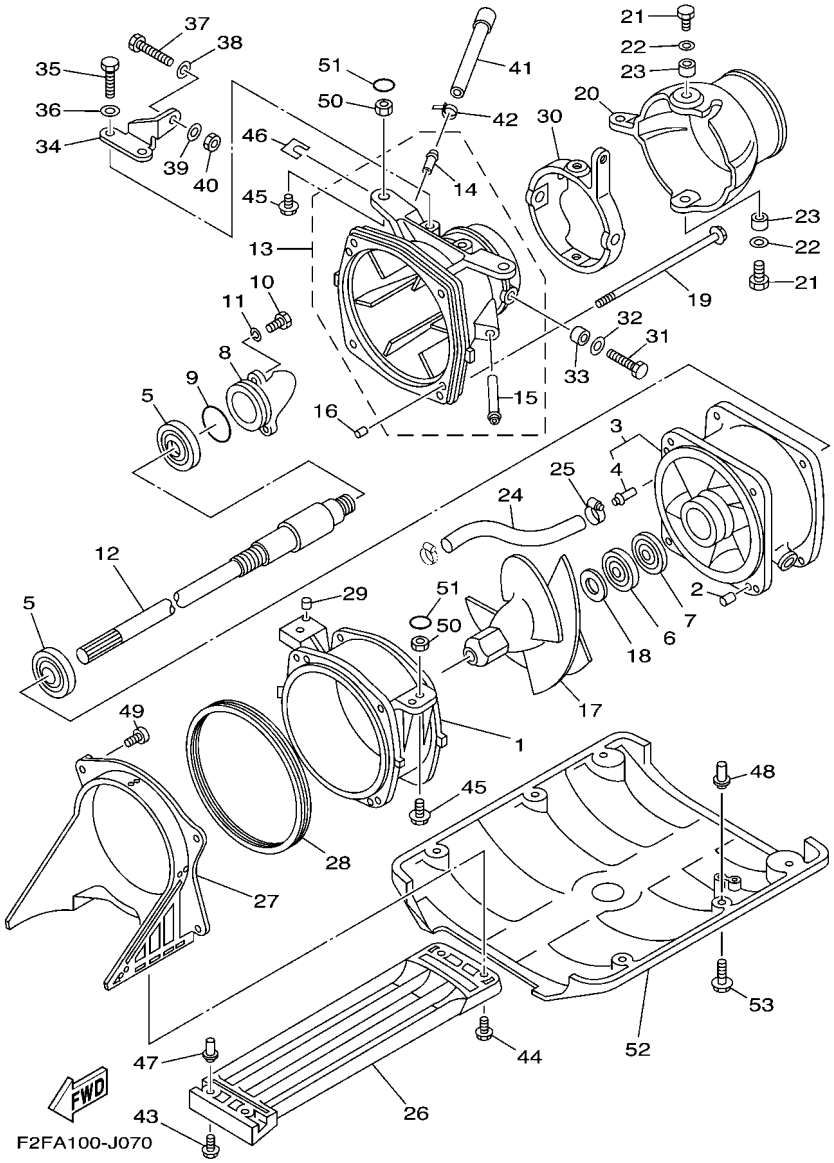

FIG. 7 JET UNIT 1

REF. NO.	PART NO.	DESCRIPTION	F4DA	F4DB				REMARKS
1	6R7–51312–03–94	HOUSING, IMPELLER	1	1				
2	93606–12019	PIN, DOWEL	2	2				
3	62T–51315–01–94	DUCT, IMPELLER	1	1				
4	6K8–51129–00	.NIPPLE	1	1				
5	93306–205U0	BEARING	2	2				
6	93102–25M34	OIL SEAL	1	1				
7	93101–25M50	OIL SEAL	1	1				
8	62T–51326–10	CAP	1	1				
9	93210–44003	O-RING	1	1				
10	97095–06020	BOLT	3	3				
11	92995–06600	WASHER	3	3				
12	6BA–45511–00	SHAFT, DRIVE	1	1				
13	64R–51318–01–94	NOZZLE	1	1				
14	6K8–51129–00	.NIPPLE	1	1				
15	62T–51129–00	.NIPPLE	1	1				
16	93606–12019	PIN, DOWEL	2	2				
17	6BA–51321–00	IMPELLER	1	1				
18	62T–51348–00	SPACER	1	1				
19	90119–06M70	BOLT, WITH WASHER	4	4				
20	6BA–51313–00	NOZZLE, DEFLECTOR	1	1				
21	97095–08020	BOLT	2	2				
22	92995–08600	WASHER	2	2				
23	90387–08M06	COLLAR	2	2				
24	90445–14M12	HOSE (L110)	1	1				
25	90450–14M05	HOSE CLAMP ASSY	1	1				
26	6R7–51333–00	SCREEN, INTAKE	1	1				
27	6R7–51311–00	DUCT, INTAKE	1	1				

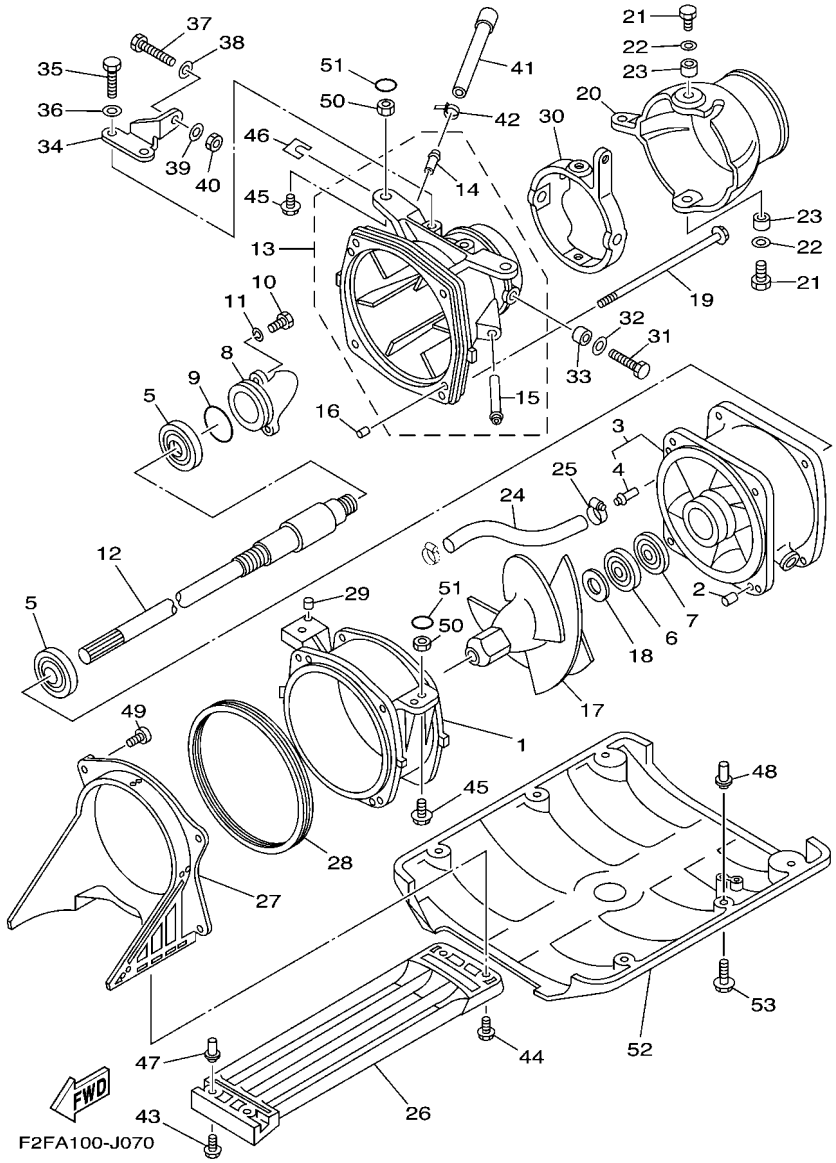

FIG. 7 JET UNIT 1

REF. NO.	PART NO.	DESCRIPTION	F4DA	F4DB				REMARKS
28	6R7–51117–01	PACKING	1	1				
29	93606–07M17	PIN, DOWEL	2	2				
30	62T–51190–01–94	RING,TRIM	1	1				
31	97095–08018	BOLT	2	2				
32	92995–08600	WASHER	2	2				
33	90387–08M08	COLLAR	2	2				
34	6BA–51387–00	STAY	1	1				
35	97095–06014	BOLT	2	2				
36	92995–06600	WASHER	2	2				
37	97095–06020	BOLT	1	1				
38	92995–06600	WASHER	1	1				
39	90201–06M31	WASHER, PLATE	1	1				
40	95380–06700	NUT	1	1				
41	6BA–51673–00	PIPE 1	1	1				
42	90465–11M10	CLAMP	1	1				
43	90119–06915	BOLT, WITH WASHER	2	2				
44	90119–06908	BOLT, WITH WASHER	2	2				
45	90119–10948	BOLT, WITH WASHER	4	4				
46	EW2–67354–C0	SHIM (T=0.5)	2	2				UN
	EW2–67354–D0	SHIM (T=1.0)	2	2				UN
47	90179–06947	NUT	2	2				
48	90179–08962	NUT	4	4				
49	97780–60120	SCREW, TAPPING	4	4				
50	90179–10925	NUT	4	4				
51	EW2–62723–30	SEAL	4	4				
52	F2F–6273B–01	PLATE 2	1	1				
53	90119–08943	BOLT, WITH WASHER	4	4				

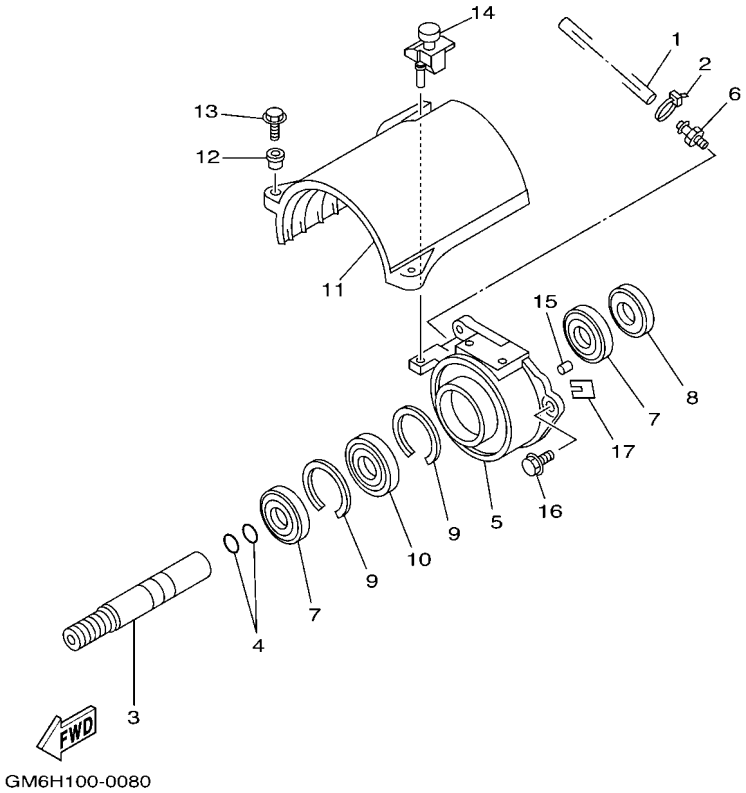

FIG. 8 JET UNIT 2

REF. NO.	PART NO.	DESCRIPTION	F4DA	F4DB				REMARKS
1	90445–09M17	HOSE (L320)	1	1				
2	90465–11M10	CLAMP	1	1				
3	6R7–51323–02	SHAFT, COUPLER	1	1				
4	93210–17MA4	O-RING	2	2				
5	61X–45332–03–94	HOUSING, BEARING	1	1				
6	61L–45378–00	NIPPLE, HOSE	1	1				
7	93101–25M55	OIL SEAL	2	2				
8	93101–25M56	OIL SEAL	1	1				
9	93430–47M04	CIRCLIP	2	2				
10	93306–205U6	BEARING	1	1				
11	61X–51381–00	COVER	1	1				
12	90387–06289	COLLAR	2	2				
13	97595–06525	BOLT, WITH WASHER	2	2				
14	90480–06M69	GROMMET	1	1				
15	93606–12019	PIN, DOWEL	2	2				
16	90119–08907	BOLT, WITH WASHER	3	3				
17	GD0–67249–A0	SHIM (T=0.5)	2	2				UN
	GD0–67249–B0	SHIM (T=1.0)	2	2				UN

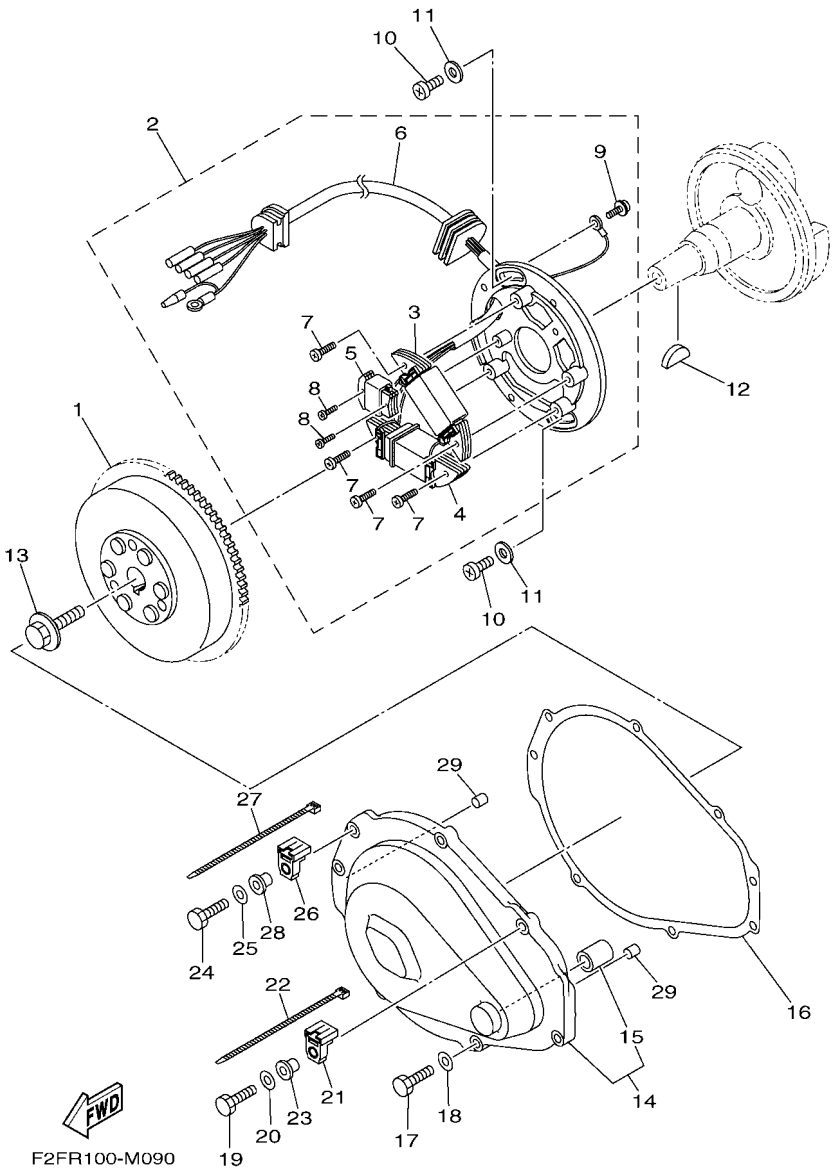

FIG. 9 GENERATOR

REF. NO.	PART NO.	DESCRIPTION	F4DA	F4DB				REMARKS
1	62T–85550–00	ROTOR ASSY	1	1				
2	62T–85560–00	BASE ASSY	1	1				
3	62T–85520–01	.COIL, CHARGE	1	1				
4	62T–85533–00	.COIL, LIGHTING	1	1				
5	6M6–85580–00	.COIL, PULSER	1	1				
6	62T–85515–00	.LEAD WIRE ASSY	1	1				
7	97902–05125	.SCREW, WITH WASHER	4	4				
8	97902–04122	.SCREW, WITH WASHER	2	2				
9	97802–04008	.SCREW, PAN HEAD	1	1				
10	97880–06016	SCREW, PAN HEAD	2	2				
11	92990–06600	WASHER, PLATE	2	2				
12	90280–05013	KEY, WOODRUFF	1	1				
13	90109–10M44	BOLT	1	1				
14	6M6–81337–00–8S	COVER, FLYWHEEL	1	1				
15	90380–12M29	.BUSH, SOLID	1	1				
16	6M6–81365–A0	GASKET, HOLE COVER	1	1				
17	97095–06025	BOLT	5	5				
18	92995–06600	WASHER	5	5				
19	97095–06035	BOLT	1	1				
20	92995–06600	WASHER	1	1				
21	6AA–85542–00	BRACKET	1	1				
22	90465–13M97	CLAMP	1	1				
23	90387–06M05	COLLAR	1	1				
24	97095–06035	BOLT	1	1				
25	92995–06600	WASHER	1	1				
26	6AA–85542–00	BRACKET	1	1				
27	90465–13M97	CLAMP	1	1				

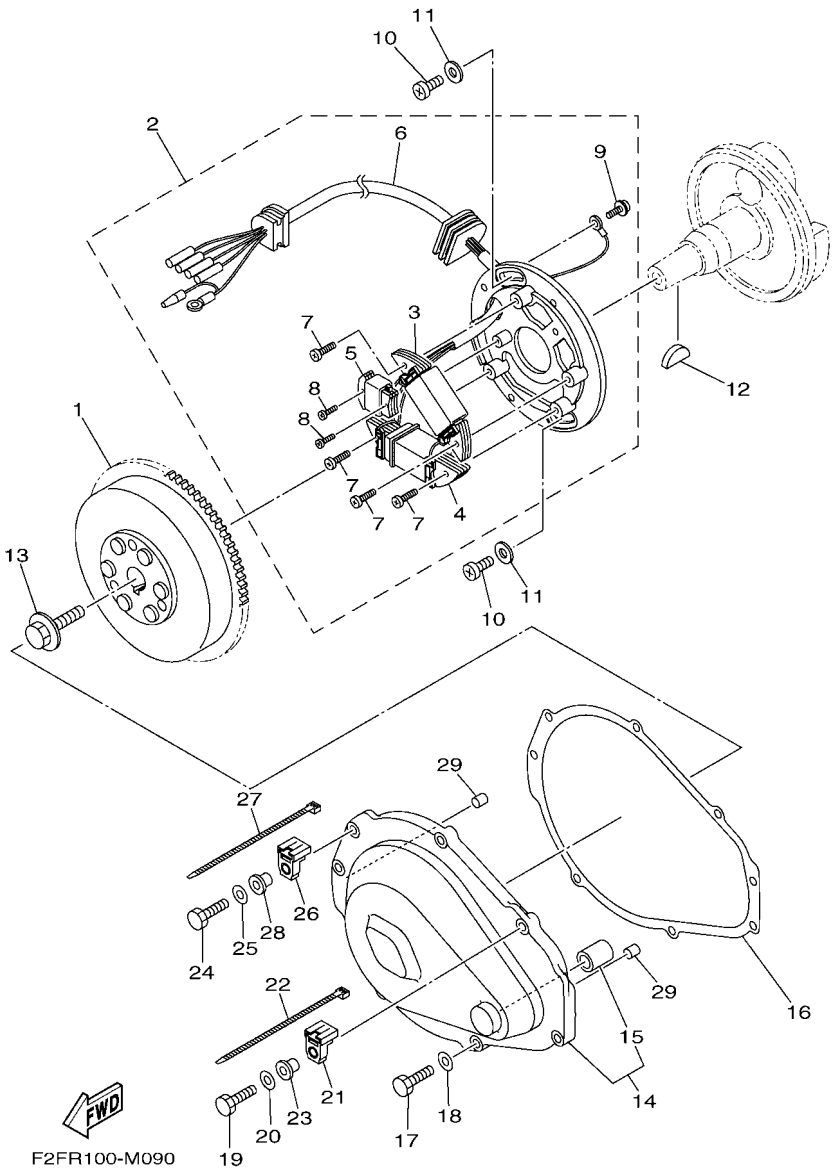

FIG. 9 GENERATOR

REF. NO.	PART NO.	DESCRIPTION	F4DA	F4DB				REMARKS
28	90387–06M05	COLLAR	1	1				
29	93606–12019	PIN, DOWEL	2	2				

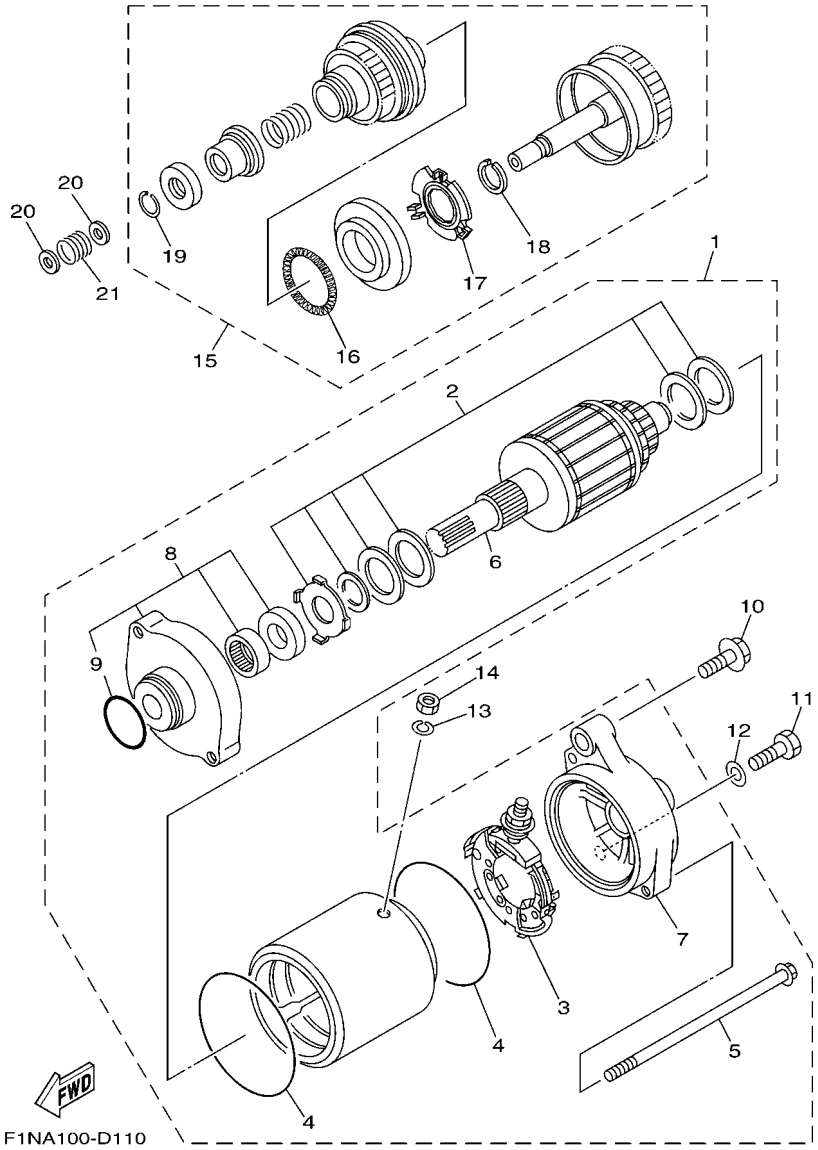

FIG. 10 STARTING MOTOR

REF. NO.	PART NO.	DESCRIPTION	F4DA	F4DB				REMARKS
1	6M6–81800–10	STARTING MOTOR ASSY	1	1				
2	3AJ–81809–00	.WASHER KIT	1	1				
3	6M6–81840–10	.BRUSH HOLDER ASSY	1	1				
4	11H–81844–00	.GASKET	2	2				
5	6M6–81826–00	.BOLT	2	2				
6	6M6–81850–00	.ARMATURE ASSY	1	1				
7	6M6–81820–00	.REAR BRACKET ASSY	1	1				
8	6M6–81830–00	.FRONT BRACKET ASSY	1	1				
9	26H–81847–00	..O-RING	1	1				
10	97513–08540	BOLT, WITH WASHER	1	1				
11	97013–08035	BOLT	1	1				
12	92903–08600	WASHER, PLATE	1	1				
13	92990–06100	WASHER, SPRING	1	1				
14	95380–06700	NUT	1	1				
15	6M6–8183E–01	IDLE GEAR COMP.	1	1				
16	6M6–81866–00	.WEIGHT SPRING	1	1				
17	6M6–81865–00	.WEIGHT HOLDER	1	1				
18	93440–25M08	.CIRCLIP	1	1				
19	93450–18M06	.CIRCLIP	1	1				
20	92903–06600	WASHER, PLATE	2	2				
21	90501–14M73	SPRING, COMPRESSION	1	1				

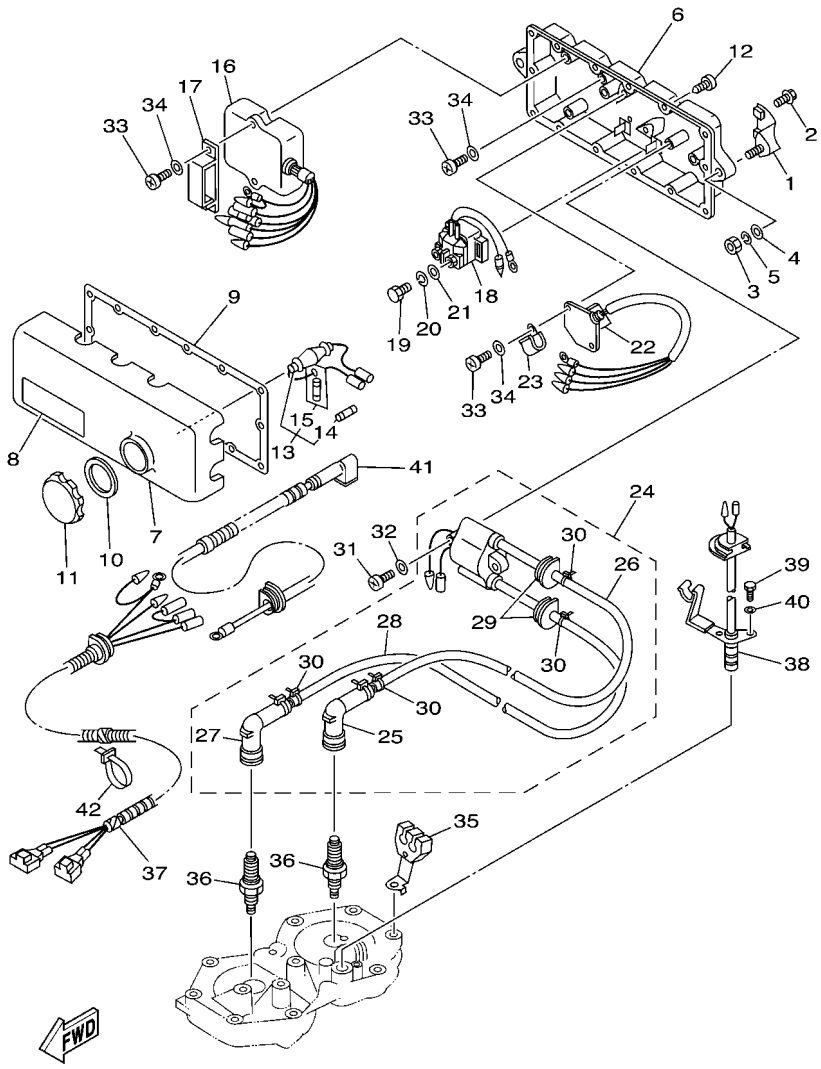

FIG. 11 ELECTRICAL 1

REF. NO.	PART NO.	DESCRIPTION	F4DA	F4DB				REMARKS
1	EW2–68156–00	BRACKET, ELECTRIC BOX	2	2				
2	90119–06908	BOLT, WITH WASHER	4	4				
3	95380–08600	NUT	2	2				
4	92990–08200	WASHER, PLAIN	2	2				
5	92990–08100	WASHER, SPRING	2	2				
6	6M6–8552A–01–8P	HOUSING	1	1				
7	6M6–8552E–01	COVER, CASE	1	1				
8	6B6–83623–00	MARK 3	1	1				
9	6M6–81921–00	GASKET, TERMINAL	1	1				
10	6M6–81844–00	GASKET	1	1				
11	6M6–8132W–00	CAP	1	1				
12	97780–60525	SCREW, TAPPING	14	14				
13	6K8–82150–01	FUSE HOLDER ASSY	1	1				
14	6G1–82151–00	.FUSE (10A)	1	1				
15	6K8–82159–00	.FUSE SPEAR (10A)	1	1				
16	62T–85540–01	C.D.I. UNIT ASSY	1	1				
17	90464–06M29	CLAMP	1	1				
18	68N–81940–00	STARTER RELAY ASSY	1	1				
19	97095–06010	BOLT	2	2				
20	92995–06100	WASHER, SPRING	2	2				
21	92995–06600	WASHER	2	2				
22	6M6–81960–A0	RECTIFIER & REGULATOR ASSY	1	1				
23	90465–06M86	CLAMP	1	1				
24	62E–85570–11	IGNITION COIL ASSY	1	1				
25	62E–82371–11	.CAP, PLUG	1	1				
26	62E–82351–01	.TUBE, CORD	1	1				
27	62E–82371–11	.CAP, PLUG	1	1				

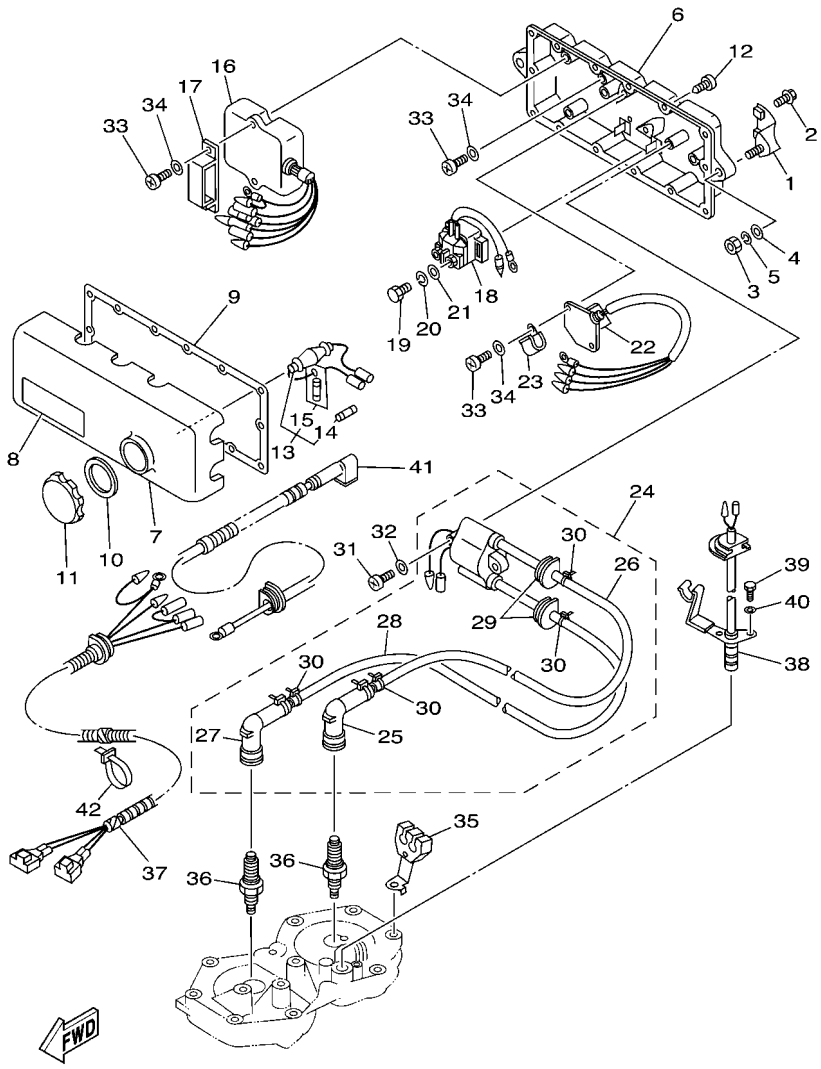

FIG. 11 ELECTRICAL 1

REF. NO.	PART NO.	DESCRIPTION	F4DA	F4DB				REMARKS
28	62E–82352–01	.TUBE, CORD 2	1	1				
29	90480–06M43	.GROMMET	2	2				
30	90465–11M10	.CLAMP	4	4				
31	97880–06030	SCREW, PAN HEAD	2	2				
32	92990–06600	WASHER, PLATE	2	2				
33	97880–06016	SCREW, PAN HEAD	6	6				
34	92990–06600	WASHER, PLATE	6	6				
35	6R7–82361–01	CLAMP, CORD	1	1				
36	94702–00272	PLUG, SPARK (NGK BR7HS)	2	2				
37	6R7–82553–01	EXTENSION, WIRE LEAD	1	1				
38	6R7–82560–11	THERMO SWITCH ASSY	1	1				
39	97095–06016	BOLT	2	2				
40	92995–06100	WASHER, SPRING	2	2				
41	62E–82117–20	WIRE, LEAD	1	1				
42	90465–13M11	CLAMP	1	1				

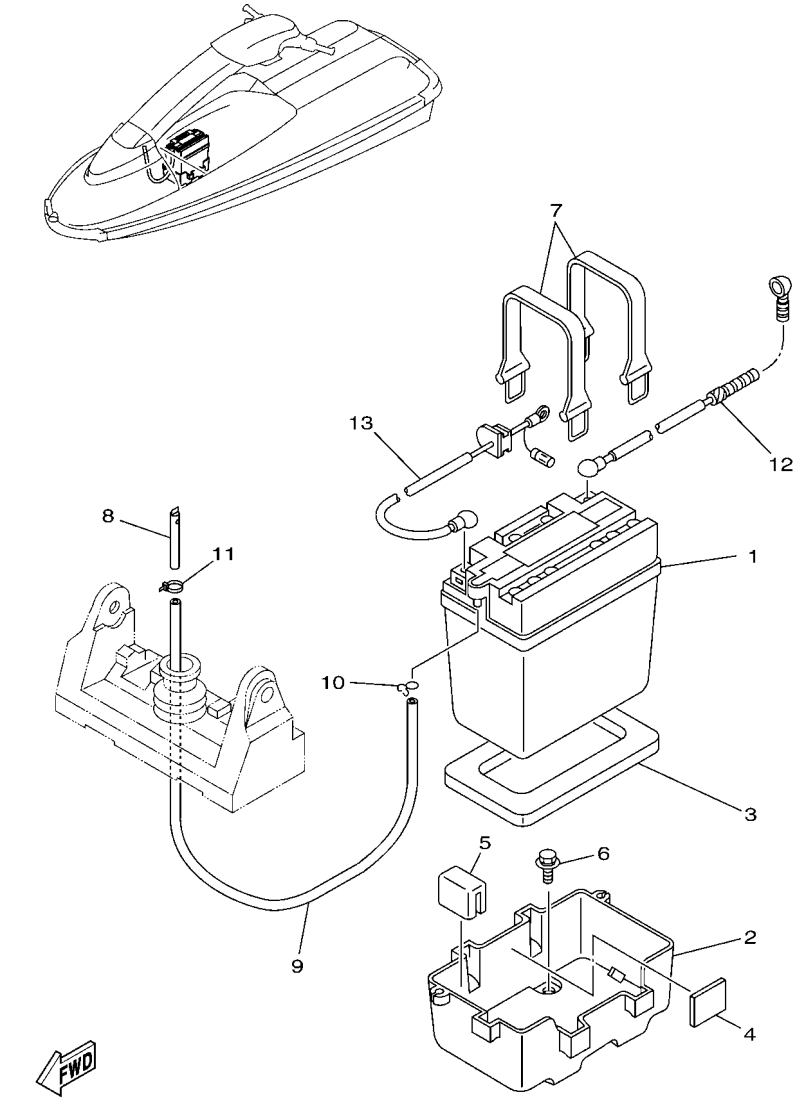

F1NA100-D130

FIG. 12 ELECTRICAL 2

REF. NO.	PART NO.	DESCRIPTION	F4DA	F4DB				REMARKS
1	EU0–82110–09	BATTERY ASSY (YB16CL-B)	1	1				YUASA
2	EW2–68211–00	CASE, BATTERY	1	1				
3	EU0–68221–00	PAD, BATTERY 1	1	1				
4	EU0–68221–30	PAD, BATTERY 2	3	3				
5	EW2–68221–00	PAD, BATTERY	1	1				
6	90119–06920	BOLT, WITH WASHER	4	4				
7	EU0–68218–04	BAND, BATTERY	2	2				
8	EW2–62149–00	PIPE, VENTILATION 1	1	1				
9	90699–50085	HOSE (L850)	1	1				
10	90467–08M10	CLIP	1	1				
11	90465–11M10	CLAMP	1	1				
12	64V–82117–00	WIRE, LEAD	1	1				
13	6R7–82117–11	WIRE, LEAD	1	1				

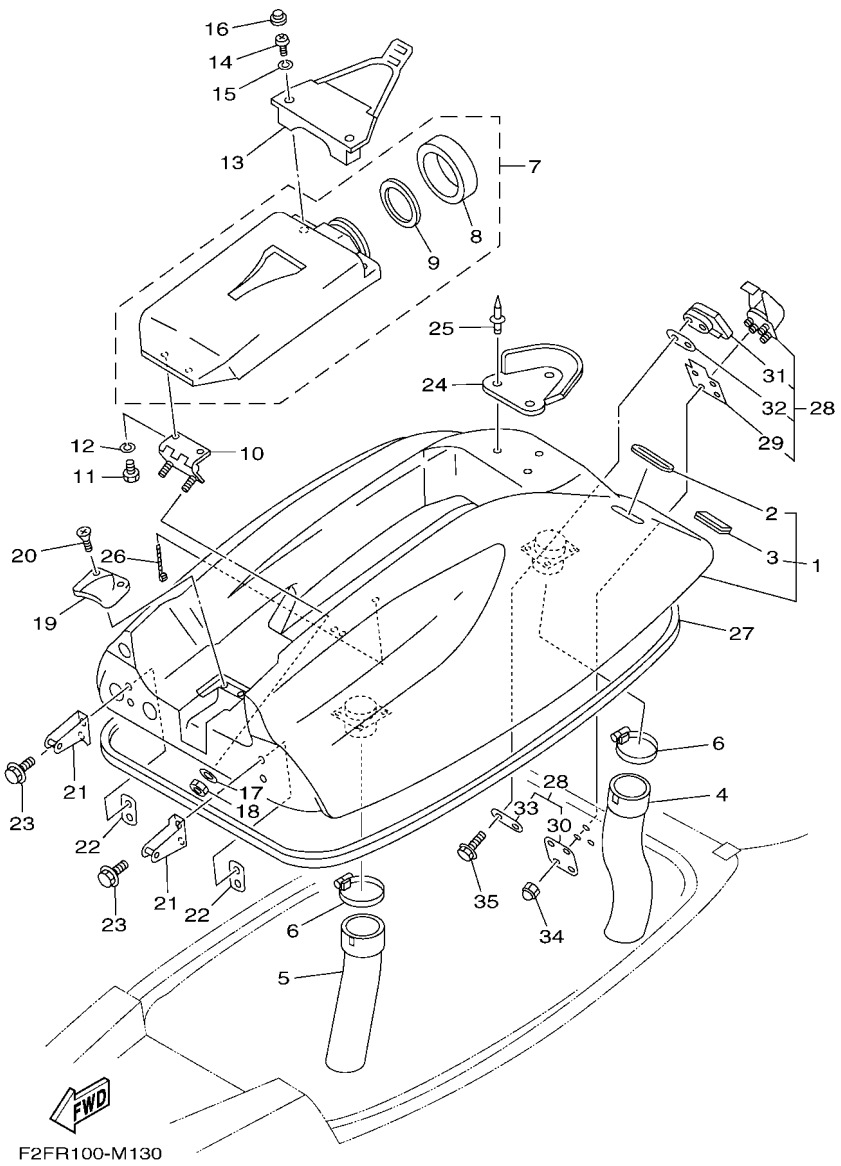

FIG. 13 ENGINE HATCH

REF. NO.	PART NO.	DESCRIPTION	F4DA	F4DB				REMARKS
1	F4D–6516A–00–P1	ENGINE HATCH COMP.	1	1				
2	FX1–65116–10	.TRIM,HATCH 2	2	2				
3	GM6–6516C–00	.TRIM 1	1	1				
4	GM6–6213F–00	HOSE,VENTILATOR 1	1	1				
5	EW2–62137–00	HOSE, VENTILATOR 2	1	1				
6	90601–16875	BAND, HOSE 68	2	2				
7	F2F–6591A–00	CASE ASSY 1	1	1				
8	EW2–65912–00	.CAP, CASE	1	1				
9	EW2–65913–00	.PACKING, CASE	1	1				
10	FX1–6517D–00	HINGE, LID	1	1				
11	97090–06014	BOLT	2	2				
12	92990–06100	WASHER, SPRING	2	2				
13	FX1–6591K–00	BAND,CASE	1	1				
14	97880–06016	SCREW, PAN HEAD	2	2				
15	92990–06100	WASHER, SPRING	2	2				
16	FX1–6514F–00	CAP	2	2				
17	92990–06200	WASHER, PLAIN	2	2				
18	95720–06300	NUT, SELF-LOCKING	2	2				
19	A00–62858–02	PLATE, HATCH (FL1)	1	1				
20	97780–50316	SCREW, OVAL HEAD TAPPING	2	2				
21	GM6–65136–00	STOPPER HATCH 2	2	2				
22	EW2–65137–00	PLATE, STOPPER HATCH 2	2	2				
23	90119–06900	BOLT, WITH WASHER	4	4				
24	FX1–6514B–00	DAMPER, POLE	1	1				
25	90267–48938	RIVET, BLIND	3	3				
26	90464–20258	CLAMP	2	2				
27	GM6–62664–01	PACKING	1	1				

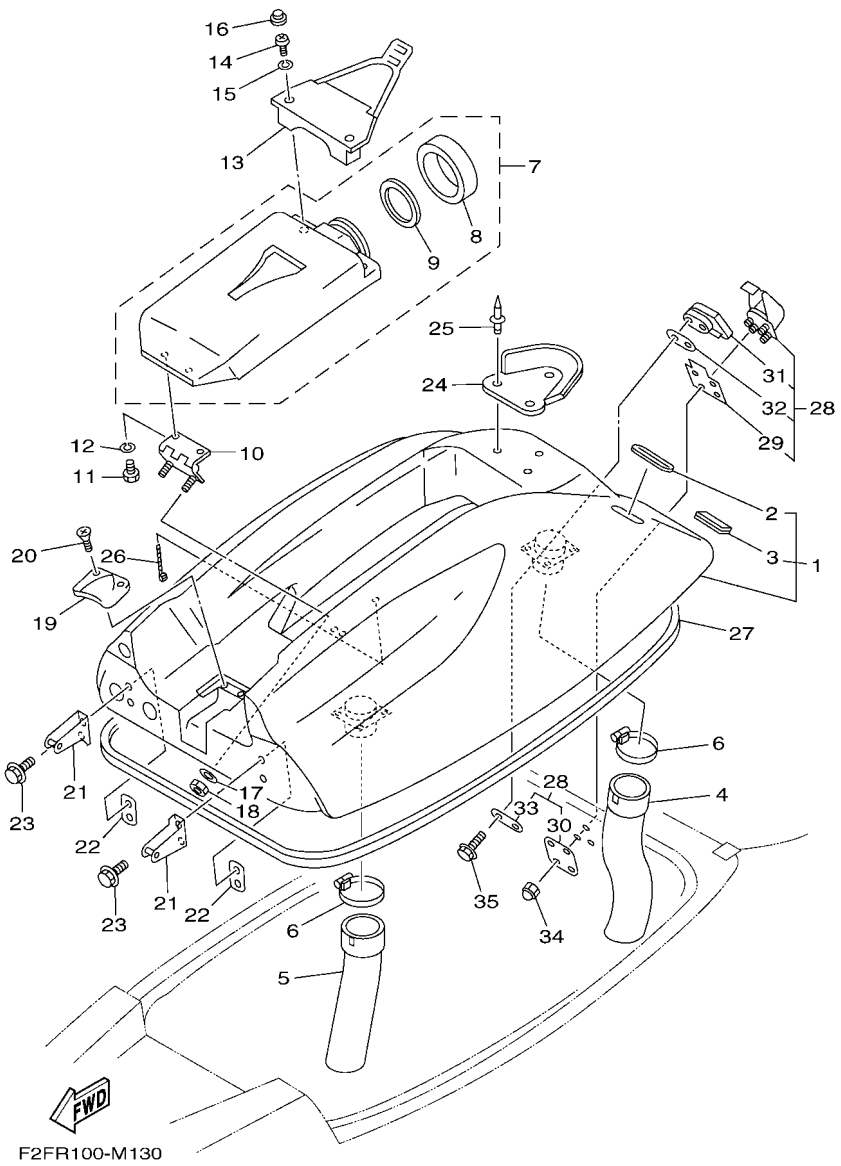

FIG. 13 ENGINE HATCH

REF. NO.	PART NO.	DESCRIPTION	F4DA	F4DB				REMARKS
28	EW2–62840–10	HATCH LOCK ASSY	1	1				
29	EW2–62845–10	.PACKING, HATCH LOCK	1	1				
30	EW2–62846–00	.PLATE, HATCH LOCK	1	1				
31	EW2–62843–00	.HOOK, HATCH LOCK	1	1				
32	EW2–62847–00	.PACKING, HOOK	1	1				
33	EW2–62848–00	.PLATE, HOOK	1	1				
34	95720–05300	NUT, FLANGE	4	4				
35	90119–05923	BOLT, WITH WASHER	2	2				

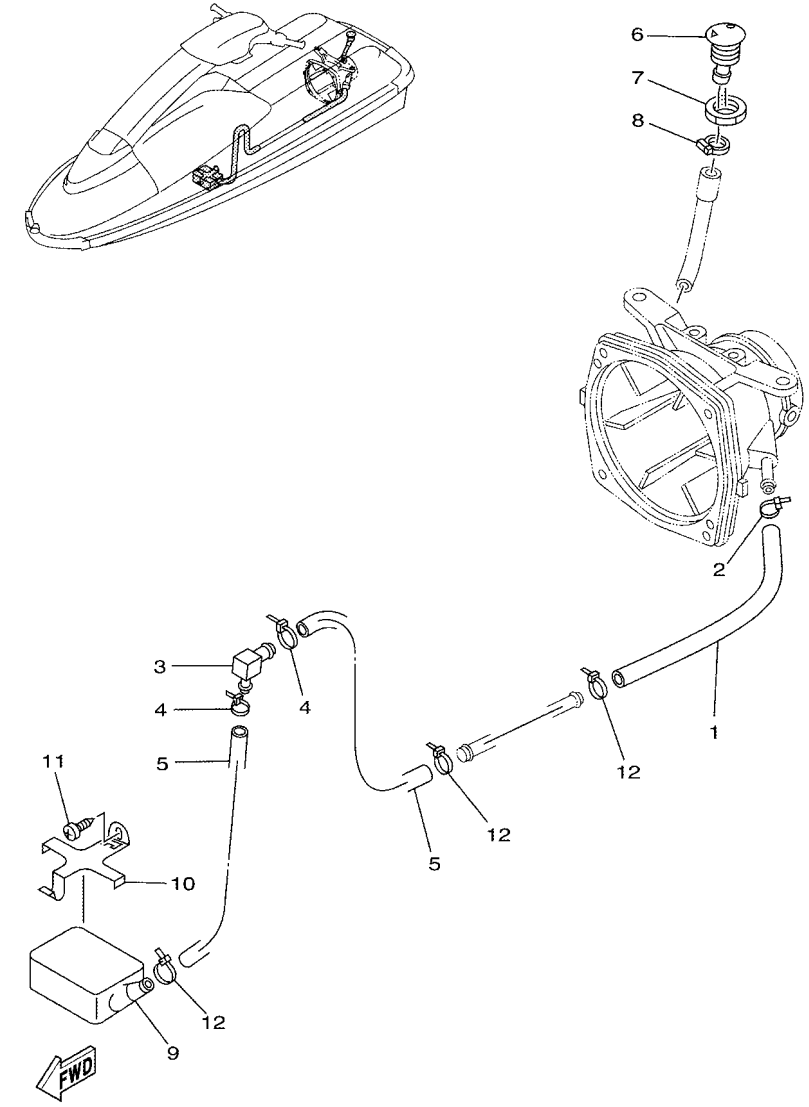

FIG. 14 HULL & DECK

REF. NO.	PART NO.	DESCRIPTION	F4DA	F4DB				REMARKS
1	90445–14M24	HOSE (L260)	1	1				
2	90465–11M10	CLAMP	1	1				
3	6K8–51162–00	JOINT, HOSE	1	1				
4	90465–13M11	CLAMP	2	2				
5	90445–14M04	HOSE (L450)	2	2				
6	FN8–6269B–00	SPOUT	1	1				
7	EU0–61652–00	NUT	1	1				
8	90600–91755	CLIP	1	1				
9	EU0–67613–00	STRAINER	1	1				
10	EW2–67618–00	BASE, STRAINER BLIGE	1	1				
11	97780–50114	SCREW, PAN HEAD TAPPING	1	1				
12	90465–13M11	CLAMP	3	3				

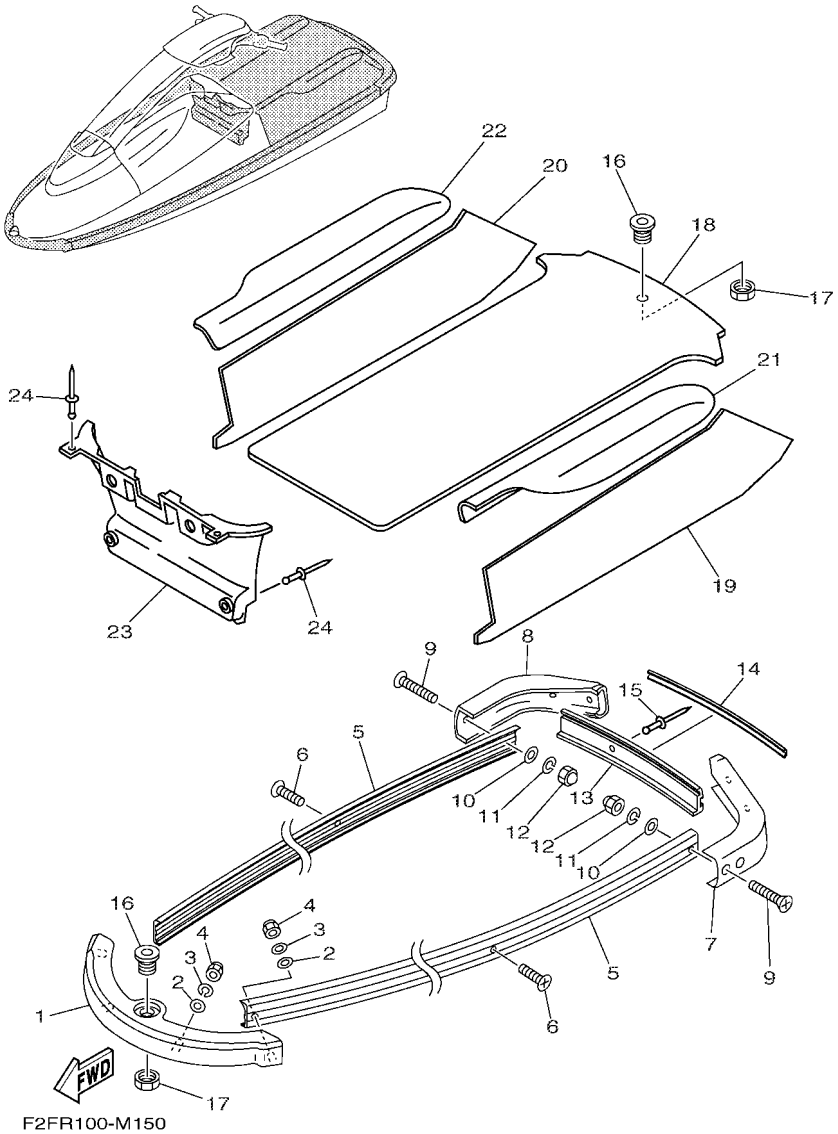

FIG. 15 GUNWALE & MAT

REF. NO.	PART NO.	DESCRIPTION	F4DA	F4DB				REMARKS
1	GM6–62501–10	BOW GUNWALE COMP.	1	1				BLACK
2	92990–06200	WASHER, PLAIN	4	4				
3	92990–06100	WASHER, SPRING	4	4				
4	95380–06800	NUT	4	4				
5	F2F–62552–00	GUNWALE, SIDE 1	2	2				BLACK
6	90149–05962	SCREW	22	22				
7	GM6–6251D–10	GUNWALE, STERN 1	1	1				YAMAHA BLACK
8	GM6–6251E–10	GUNWALE, STERN 2	1	1				YAMAHA BLACK
9	90149–05960	SCREW	8	8				
10	92990–05200	WASHER, PLAIN	8	8				
11	92990–05100	WASHER, SPRING	8	8				
12	90179–05964	NUT	8	8				
13	F2F–6252C–00	COVER, GUNWALE 1	1	1				BLACK
14	GM6–6252D–10	COVER, GUNWALE 2	1	1				BLACK
15	90267–48932	RIVET, BLIND	4	4				
16	FN8–61651–01	ROPE HOLE	2	2				
17	EU0–61652–00	NUT	2	2				
18	F2F–6351B–00	MAT,LOWER	1	1				BLACK
19	GM6–6351C–00	MAT, SIDE 1	1	1				BLACK
20	GM6–6351D–00	MAT,SIDE 2	1	1				BLACK
21	GM6–6521C–10	PAD 1	1	1				BLACK
22	GM6–6521D–10	PAD 2	1	1				BLACK
23	GM6–6351E–10	MAT,BOW	1	1				YAMAHA BLACK
24	90267–48963	RIVET, BLIND	4	4				

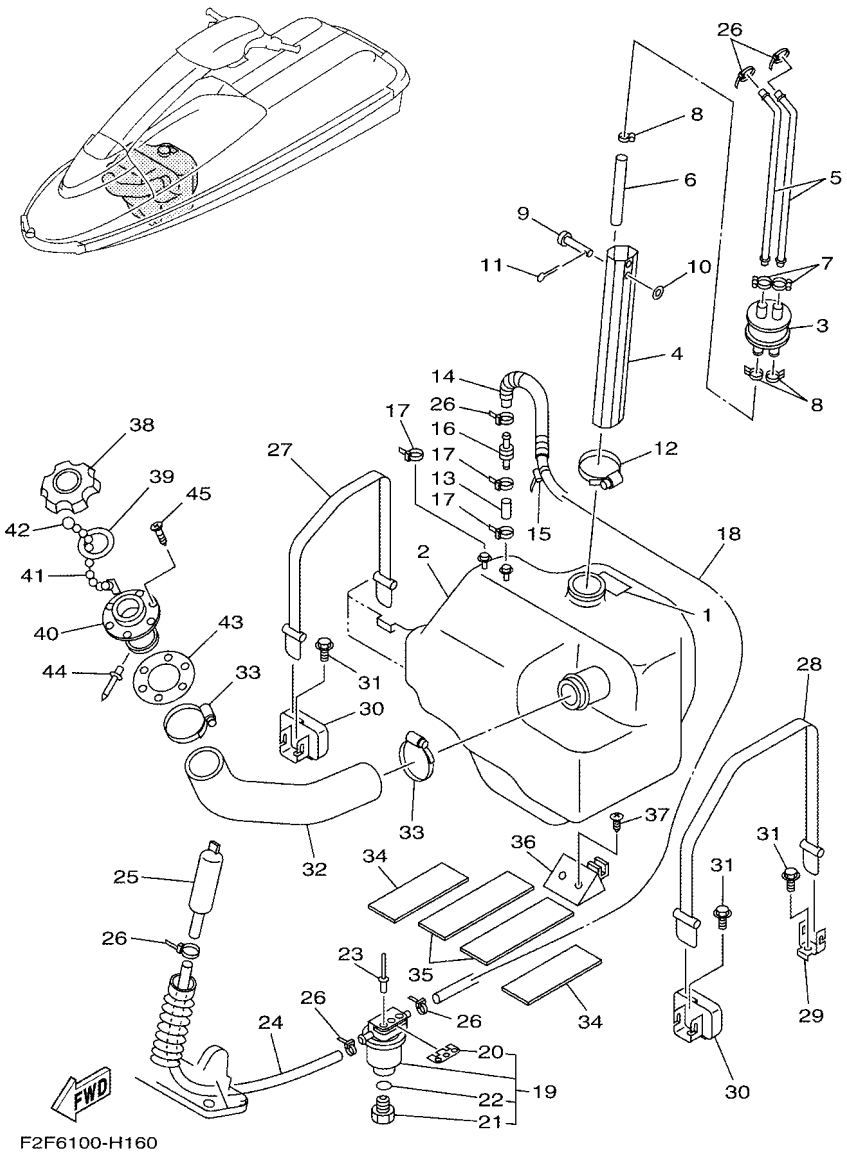

FIG. 16 FUEL TANK

REF. NO.	PART NO.	DESCRIPTION	F4DA	F4DB				REMARKS
1	GM6–6418D–00	LABEL,FUEL TANK	1	1				
2	EW2–67711–01	TANK, FUEL	1	1				
3	FJ0–67713–00	PIPE, JOINT	1	1				
4	EW2–67716–02	PIPE, FILLER	1	1				
5	EW2–67714–02	PIPE, SUCTION 3	2	2				
6	90445–11055	HOSE (L95)	1	1				
7	90601–11062	BAND, HOSE 11	2	2				
8	90467–11032	CLIP	3	3				
9	91790–05040	PIN, CLEVIS	1	1				
10	92990–05600	WASHER, PLATE	1	1				
11	91490–16010	PIN. COTTER	1	1				
12	90601–16274	BAND, HOSE 62	1	1				
13	90699–50003	HOSE	1	1				
14	90446–14M30	HOSE (L120)	1	1				
15	90465–13M11	CLAMP	1	1				
16	EU0–67767–31	CHECK VALVE	1	1				
17	90465–11M10	CLAMP	3	3				
18	90699–50120	HOSE	1	1				
19	F2F–6214A–00	FILTER, VENT ASSY	1	1				
20	EW2–62142–00	.PLATE, FILTER	1	1				
21	70R–24543–00	.PLUG, DRAIN	1	1				
22	70R–24489–00	.O-RING	1	1				
23	90267–48925	RIVET, BLIND	2	2				
24	90699–50045	HOSE	1	1				
25	EW2–62150–00	PIPE,VENTILATION 3	1	1				
26	90465–11M10	CLAMP	6	6				
27	EW2–67821–00	BAND, FUEL TANK	1	1				

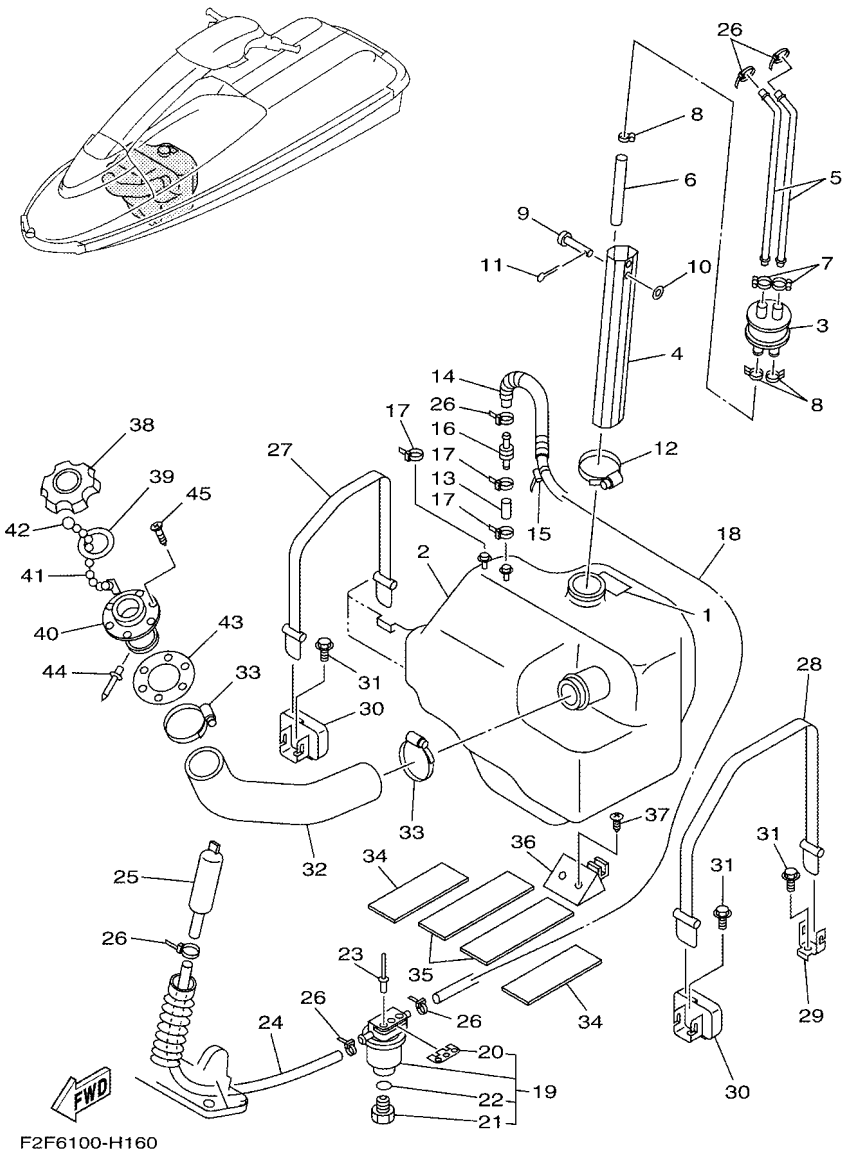

FIG. 16 FUEL TANK

REF. NO.	PART NO.	DESCRIPTION	F4DA	F4DB				REMARKS
28	EW2–67821–30	BAND, FUEL TANK	1	1				
29	EW2–65772–00	HOOK A	1	1				
30	FX1–65760–00	HOOK B ASSY	2	2				
31	90105–06900	BOLT, FLANGE	3	3				
32	GM6–67844–11	HOSE	1	1				
33	90601–15573	BAND, HOSE 55	2	2				
34	GM6–67593–00	MAT	2	2				
35	F2F–6759B–00	MAT 1	2	2				
36	EW2–67822–01	DAMPER FUEL TANK	1	1				
37	97780–50114	SCREW, PAN HEAD TAPPING	2	2				
38	FN8–67831–01	CAP, FUEL FILLER	1	1				YAMAHA BLACK
39	EU0–67832–00	PACKING 1	1	1				
40	FN8–67833–00	SOCKET	1	1				
41	EU0–67835–00	CHAIN BALL	1	1				
42	EU0–67839–00	COUPLING	1	1				
43	EU0–67834–00	PACKING, FUEL FILLER	1	1				
44	90267–40935	RIVET, BLIND	1	1				
45	EU0–67869–00	SCREW, FLAT HEAD	6	6				

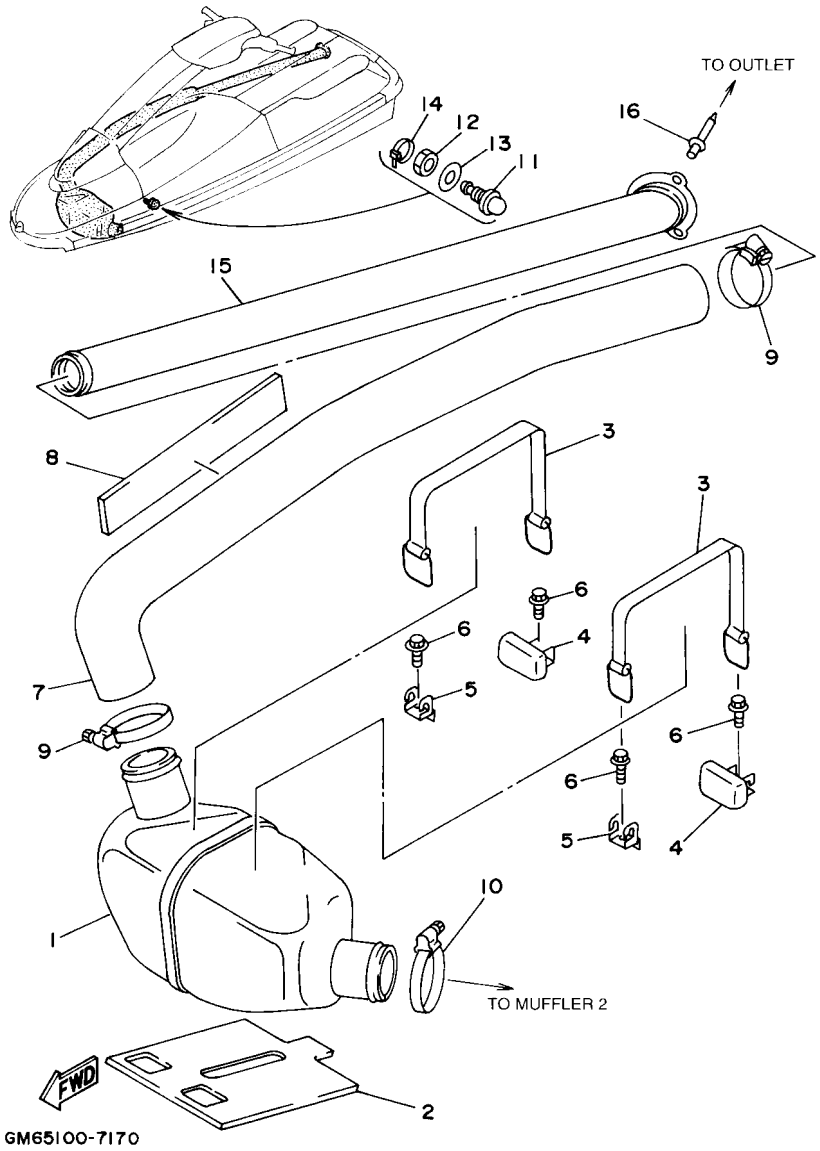

FIG. 17 EXHAUST 2

REF. NO.	PART NO.	DESCRIPTION	F4DA	F4DB				REMARKS
1	F2F–67550–00	WATER LOCK COMP.	1	1				
2	GM6–6755J–00	MAT,WATER LOCK	1	1				
3	EU0–68218–04	BAND, BATTERY	2	2				
4	FX1–65760–00	HOOK B ASSY	2	2				
5	EW2–65772–00	HOOK A	2	2				
6	90105–06900	BOLT, FLANGE	4	4				
7	GM6–67555–00	HOSE	1	1				
8	GM6–63844–00	MAT	1	1				
9	90601–16875	BAND, HOSE 68	2	2				
10	90601–16875	BAND, HOSE 68	1	1				
11	GH7–6753B–00	PILOT,WATER	1	1				
12	GP7–61652–00	NUT	1	1				
13	92990–14200	WASHER, PLAIN	1	1				
14	90465–11M10	CLAMP	1	1				
15	GM6–67565–00	THRU-HULL,EXHAUST	1	1				
16	90267–48930	RIVET, SEALD	3	3				

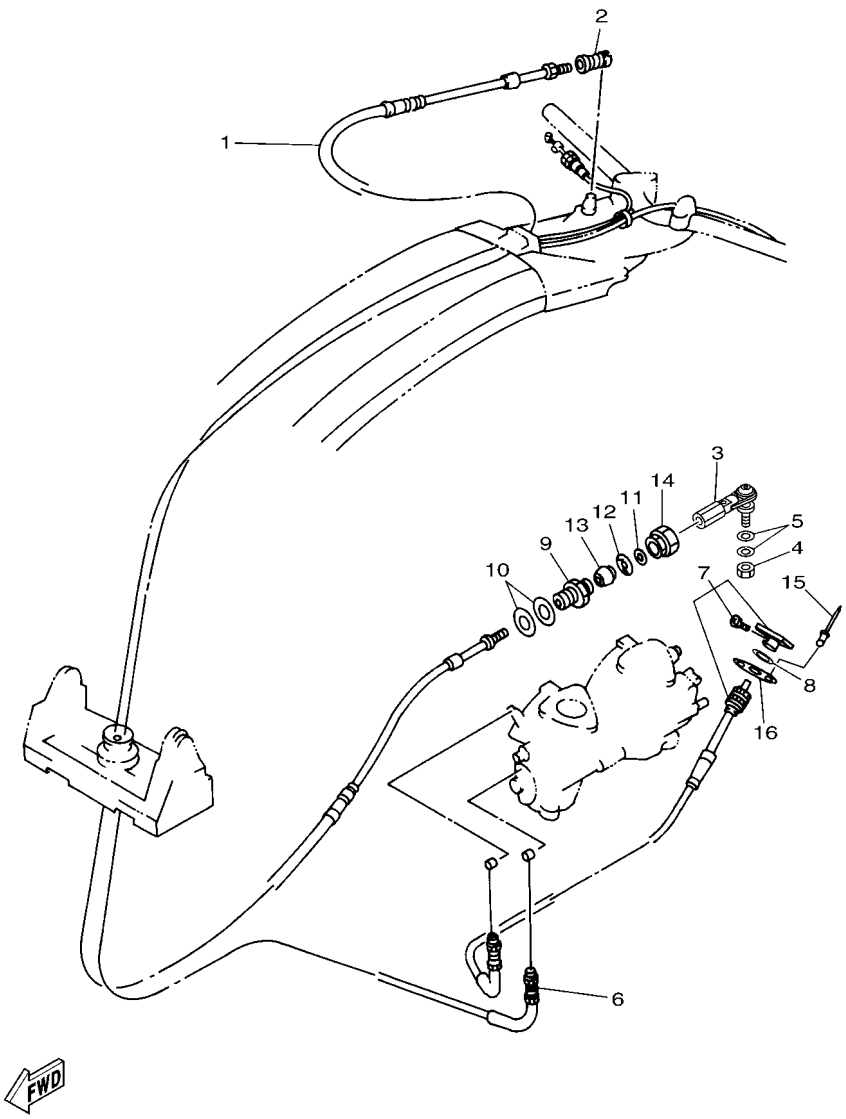

F2F1100-G190

FIG. 18 CONTROL CABLE

REF. NO.	PART NO.	DESCRIPTION	F4DA	F4DB				REMARKS
1	F2F–61481–00	CABLE, STEERING	1	1				
2	EU0–61461–30	SHAFT, JOINT BALL	1	1				
3	F2F–61461–00	STUD, JOINT BALL	1	1				
4	95380–06700	NUT	1	1				
5	90201–06906	WASHER, PLATE	2	2				
6	GM6–67252–00	CABLE, THROTTLE	1	1				
7	GM6–67242–00	CABLE, CHOKE	1	1				
8	90201–11008	WASHER, PLATE	1	1				
9	EU0–61436–00	BODY,CABLE CONNECTOR	1	1				
10	EU0–61438–00	PACKING (C)	2	2				
11	EU0–61446–00	WASHER 30	1	1				
12	EU0–61486–00	STOPPER	1	1				
13	EU0–61435–00	SEAL, PIPE 30	1	1				
14	EU0–62694–00	CAP	1	1				
15	90267–40945	RIVET, BLIND	2	2				
16	90209–12920	WASHER	1	1				

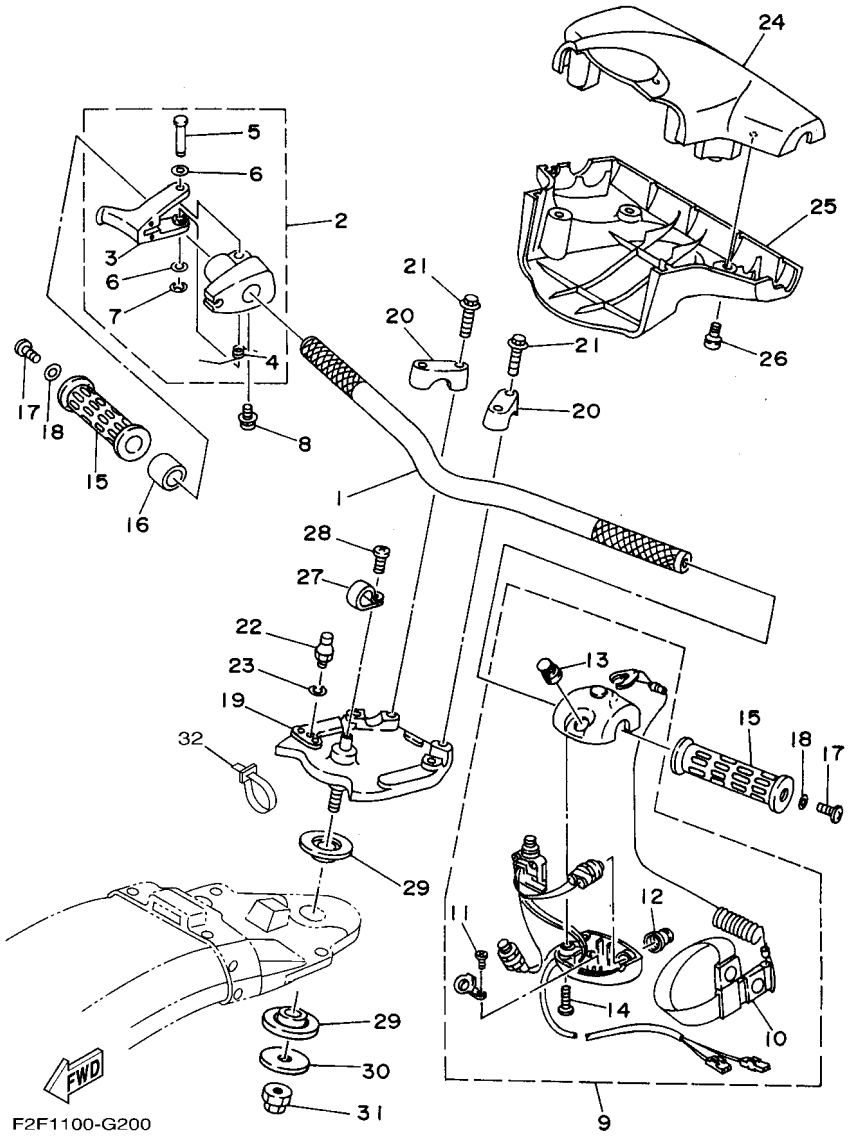

FIG. 19 STEERING 1

REF. NO.	PART NO.	DESCRIPTION	F4DA	F4DB				REMARKS
1	F2F–61552–00	HANDLE	1	1				
2	EW2–67250–02	THROTTLE LEVER ASSY	1	1				
3	EW2–67255–00	.LEVER, THROTTLE	1	1				
4	EW2–67256–00	.SPRING	1	1				
5	EW2–67257–01	.SHAFT	1	1				
6	EW2–67258–01	.WASHER	2	2				
7	EW2–67259–01	.E-RING	1	1				
8	90159–05900	SCREW, WITH WASHER	1	1				
9	EW2–68310–04	SWITCH BOX ASSY	1	1				
10	EW2–68348–00	.LANYARD, STOP SWITCH	1	1				
11	97880–03008	.SCREW, PAN HEAD	2	2				
12	FK7–68312–02	.STOP BUTTON COMP	1	1				
13	FK7–68313–02	.START BUTTON COMP.	1	1				
14	97880–05025	.SCREW, PAN HEAD	1	1				
15	EW2–61553–00	GRIP, HANDLE 1	2	2				
16	90560–22281	SPACER	1	1				
17	90149–05959	SCREW	2	2				
18	90201–05928	WASHER, PLATE	2	2				
19	F2F–61541–00	COLUMN, STEERING	1	1				
20	EU0–23814–02	HOLDER, HANDLE UPPER	2	2				
21	90105–08902	BOLT, FLANGE	4	4				
22	EU0–61461–02	STUD, JOINT BALL	1	1				
23	92990–06100	WASHER, SPRING	1	1				
24	FX1–6143D–20	PAD, STEERING 1	1	1				YAMAHA BLACK
25	FX1–6143E–20	PAD, STEERING 2	1	1				YAMAHA BLACK
26	90149–05937	SCREW	4	4				
27	90600–91728	CLIP, NYLON 17	1	1				

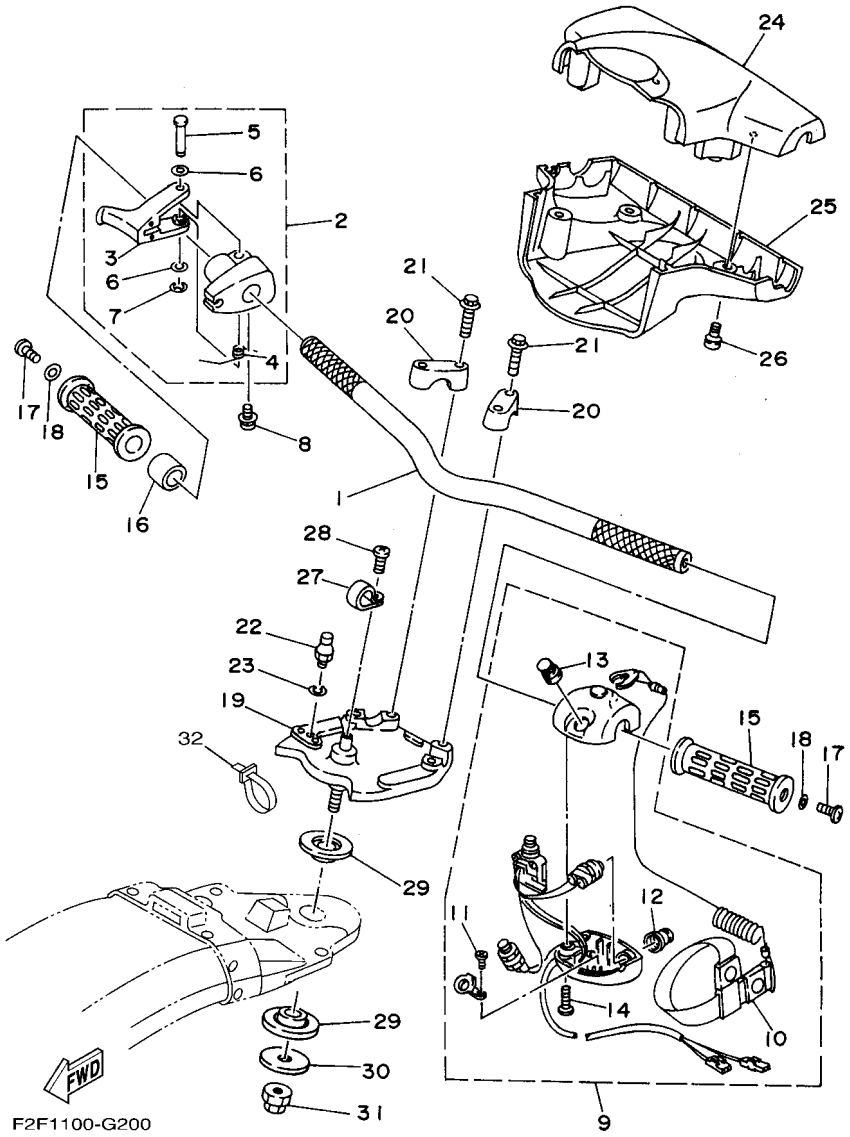

FIG. 19 STEERING 1

REF. NO.	PART NO.	DESCRIPTION	F4DA	F4DB				REMARKS
28	98980–04010	SCREW, BIND	1	1				
29	EW2–61417–00	BEARING, COLUMN	2	2				
30	EW2–61419–00	WASHER, STEERING	1	1				
31	90179–12933	NUT	1	1				
32	90465–13M11	CLAMP	1	1				

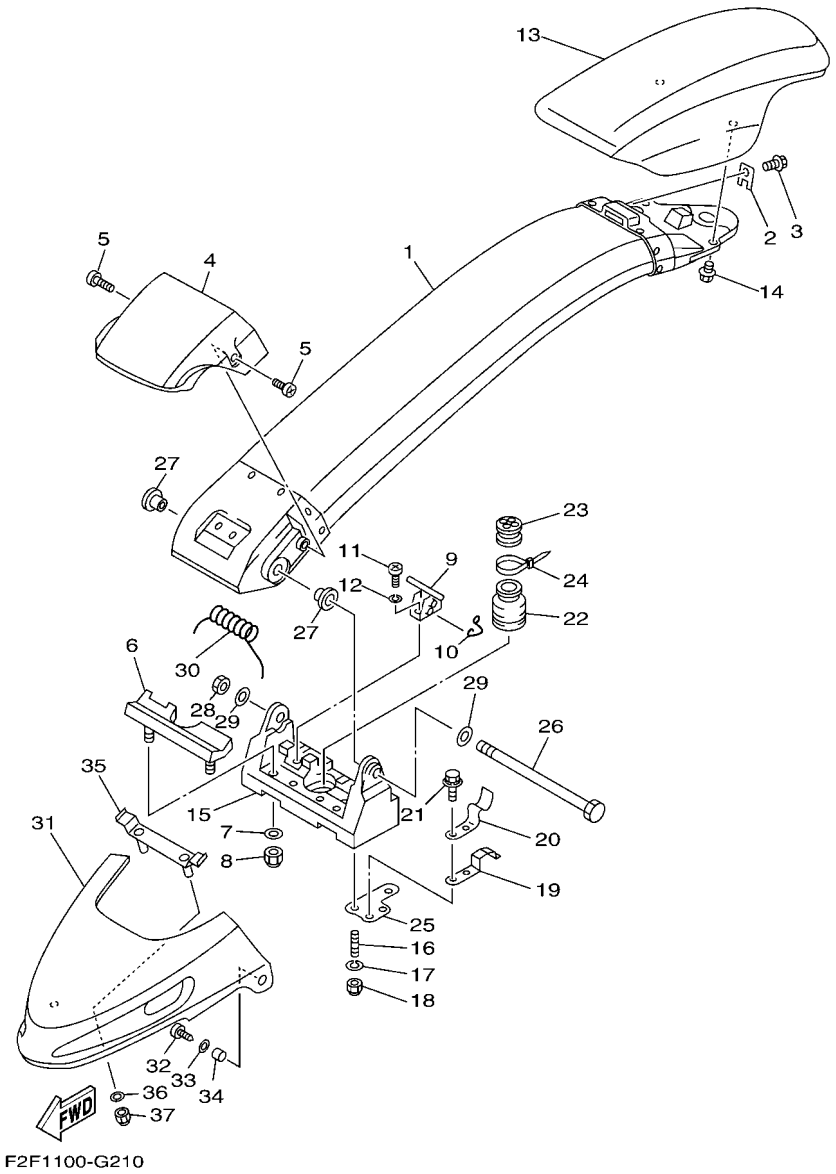

FIG. 20 STEERING 2

REF. NO.	PART NO.	DESCRIPTION	F4DA	F4DB				REMARKS
1	F2F–6491A–09–P2	STEERING POLE COMP.	1	1				
2	FX1–61468–00	STOPPER, CABLE	1	1				
3	90119–06913	BOLT, WITH WASHER	1	1				
4	FX1–6492E–10	COVER,POLE	1	1				BLACK
5	90149–06997	SCREW	2	2				
6	FX1–61337–00	STOPPER, POLE	1	1				
7	92990–06200	WASHER, PLAIN	2	2				
8	95720–06300	NUT, SELF-LOCKING	2	2				
9	FX1–61105–00	STOPPER PIN ASSY	1	1				
10	EW2–61395–30	SPRING, TORSION	1	1				
11	97880–05012	SCREW, PAN HEAD	2	2				
12	92990–05100	WASHER, SPRING	2	2				
13	GM6–6142A–40	STEERING PAD COMP	1	1				
14	90119–06908	BOLT, WITH WASHER	2	2				
15	FX1–6133C–13	BRACKET,PIVOT	1	1				
16	95680–08630	BOLT, STUD	4	4				
17	92990–08100	WASHER, SPRING	4	4				
18	95720–08300	NUT, SELF-LOCKING	4	4				
19	GM6–6215G–00	PLATE,GUIDE	2	2				
20	GM6–65135–00	STOPPER, HATCH 1	2	2				
21	90119–06900	BOLT, WITH WASHER	4	4				
22	FX1–61338–00	GROMMET	1	1				
23	EW2–61465–00	PACKING, CABLE	1	1				
24	90601–20006	BAND	1	1				
25	GM6–6133B–00	PLATE, BRACKET	2	2				
26	FX1–6134L–00	SHAFT,PIVOT	1	1				
27	EW2–61344–01	BUSH	2	2				

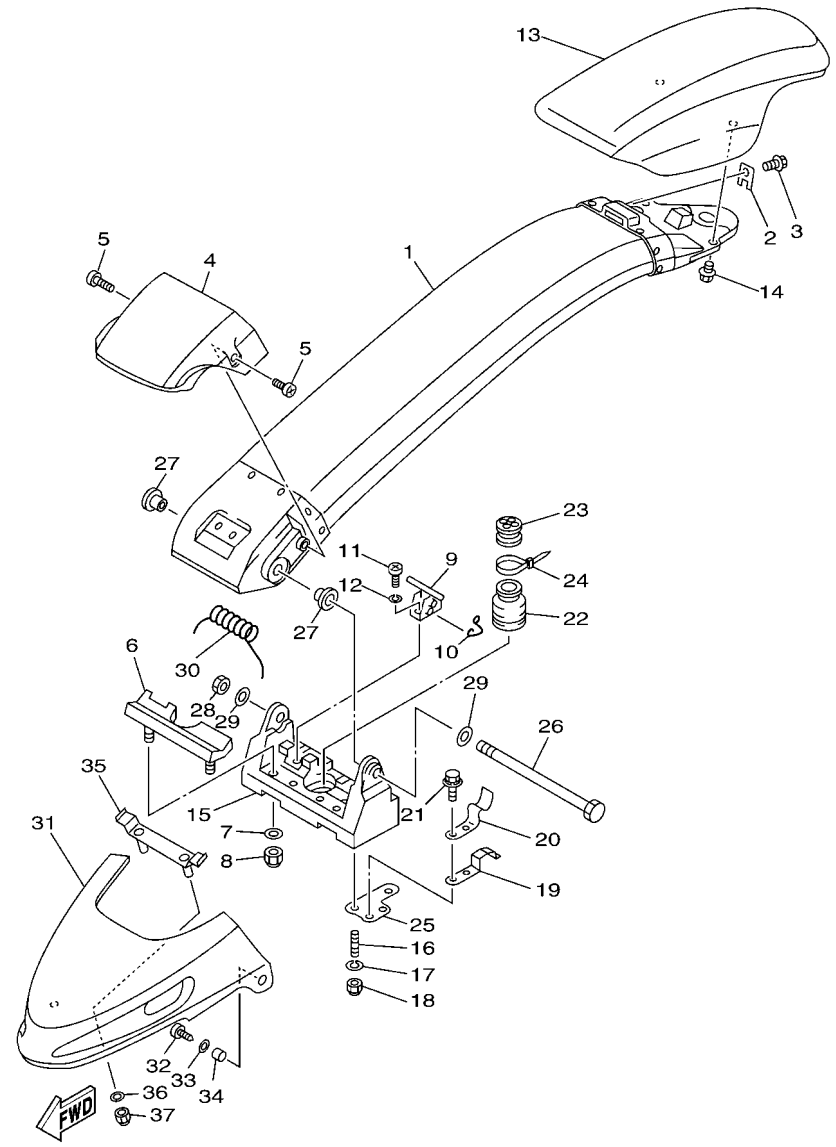

F2F1100-G210

FIG. 20 STEERING 2

REF. NO.	PART NO.	DESCRIPTION	F4DA	F4DB				REMARKS
28	90170–14913	NUT	1	1				
29	92990–14200	WASHER, PLAIN	2	2				
30	FX1–61391–00	SPRING, PIVOT	1	1				
31	GM6–6492J–41	COVER, PIVOT 1	1	1				
32	97780–60520	SCREW, TAPPING	2	2				
33	92990–06200	WASHER, PLAIN	2	2				
34	90387–06916	COLLAR	2	2				
35	GM6–64949–00	BRACKET	1	1				
36	92990–06200	WASHER, PLAIN	2	2				
37	95720–06300	NUT, SELF-LOCKING	2	2				

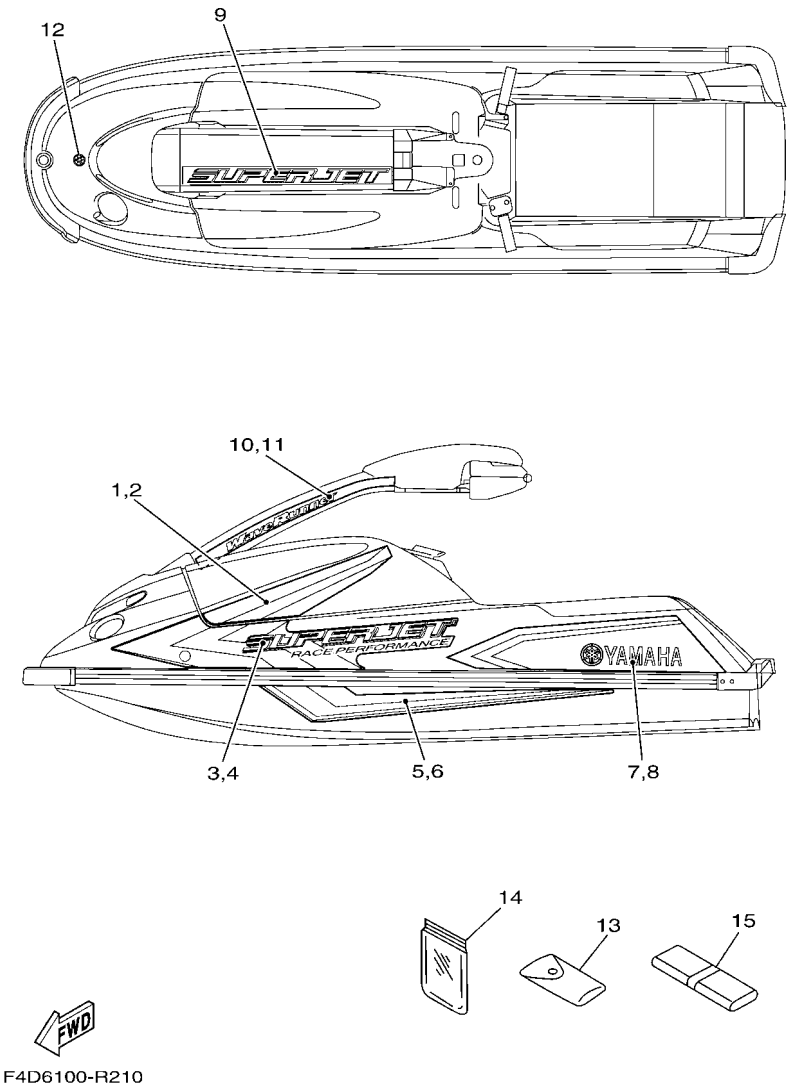

FIG. 21 GRAPHICS

REF. NO.	PART NO.	DESCRIPTION	F4DA	F4DB				REMARKS
1	F4D–6417B–20	GRAPHIC 1 (LH)	1	1				FOR BLACK & WHITE
	F4D–6417B–40	GRAPHIC 1 (LH)	1	1				FOR ORANGE & BLUE
2	F4D–6417B–30	GRAPHIC 1 (RH)	1	1				FOR BLACK & WHITE
	F4D–6417B–50	GRAPHIC 1 (RH)	1	1				FOR ORANGE & BLUE
3	F4D–6417C–20	GRAPHIC 2 (LH)	1	1				FOR BLACK & WHITE
	F4D–6417C–40	GRAPHIC 2 (LH)	1	1				FOR ORANGE & BLUE
4	F4D–6417C–30	GRAPHIC 2 (RH)	1	1				FOR BLACK & WHITE
	F4D–6417C–50	GRAPHIC 2 (RH)	1	1				FOR ORANGE & BLUE
5	F4D–6417D–20	GRAPHIC 3 (LH)	1	1				FOR BLACK & WHITE
	F4D–6417D–40	GRAPHIC 3 (LH)	1	1				FOR ORANGE & BLUE
6	F4D–6417D–30	GRAPHIC 3 (RH)	1	1				FOR BLACK & WHITE
	F4D–6417D–50	GRAPHIC 3 (RH)	1	1				FOR ORANGE & BLUE
7	F4D–6417E–20	GRAPHIC 4 (LH)	1	1				FOR BLACK & WHITE
	F4D–6417E–40	GRAPHIC 4 (LH)	1	1				FOR ORANGE & BLUE
8	F4D–6417E–30	GRAPHIC 4 (RH)	1	1				FOR BLACK & WHITE
	F4D–6417E–50	GRAPHIC 4 (RH)	1	1				FOR ORANGE & BLUE
9	F4D–6417F–00	GRAPHIC 5	1	1				FOR BLACK & WHITE
	F4D–6417F–10	GRAPHIC 5	1	1				FOR ORANGE & BLUE
10	F2F–6417G–80	GRAPHIC 6 (LH)	1	1				FOR BLACK & WHITE
	F4D–6417G–40	GRAPHIC 6 (LH)	1	1				FOR ORANGE & BLUE
11	F2F–6417G–90	GRAPHIC 6 (RH)	1	1				FOR BLACK & WHITE
	F4D–6417G–50	GRAPHIC 6 (RH)	1	1				FOR ORANGE & BLUE
12	GM6–6411H–00	EMBLEM, TUNING FORK	1	1				
13	EU0–65986–03	TOOL SET	1	1				
14	EU0–65901–02	TOOL BAG	1	1				
15	GM6–65987–00	BAG	1	1				

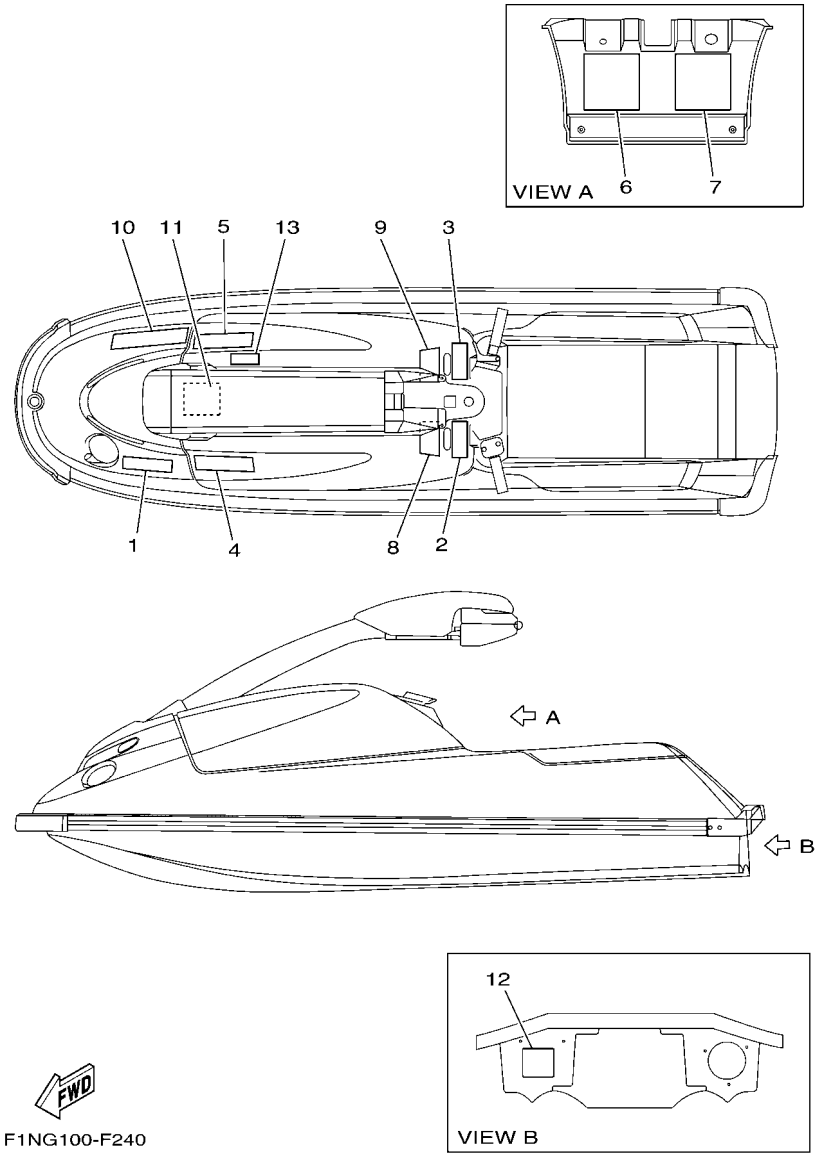

FIG. 22 IMPORTANT LABELS

REF. NO.	PART NO.	DESCRIPTION	F4DA	F4DB				REMARKS
1	F1N–6415B–10	LABEL, WARNING(FUEL)	1	1				
2	GM6–641B1–21	LABEL, WARNING UNIFORM 1	1	1				
3	GM6–641B1–10	LABEL, WARNING UNIFORM 1	1	1				
4	GM6–641B1–41	LABEL, WARNING UNIFORM 1	1	1				
5	GM6–641B1–50	LABEL, WARNING UNIFORM 1	1	1				
6	GM6–641B2–00	LABEL, WARNING UNIFORM 2	1	1				
7	GM6–641B2–10	LABEL, WARNING UNIFORM 2	1	1				
8	GM6–641B2–40	LABEL, WARNING UNIFORM 2	1	1				
9	GM6–641B2–50	LABEL, WARNING UNIFORM 2	1	1				
10	GA7–6416H–20	LABEL,WARNING(FRANCE)		1				FOR EUR
11	F1N–641DB–10	LABEL, WARNING BATTERY	1	1				
12	F2F–6418F–00	LABEL, RIGHTING	1	1				
13	F1N–6413S–00	LABEL, COMPETITION		1				FOR EUR

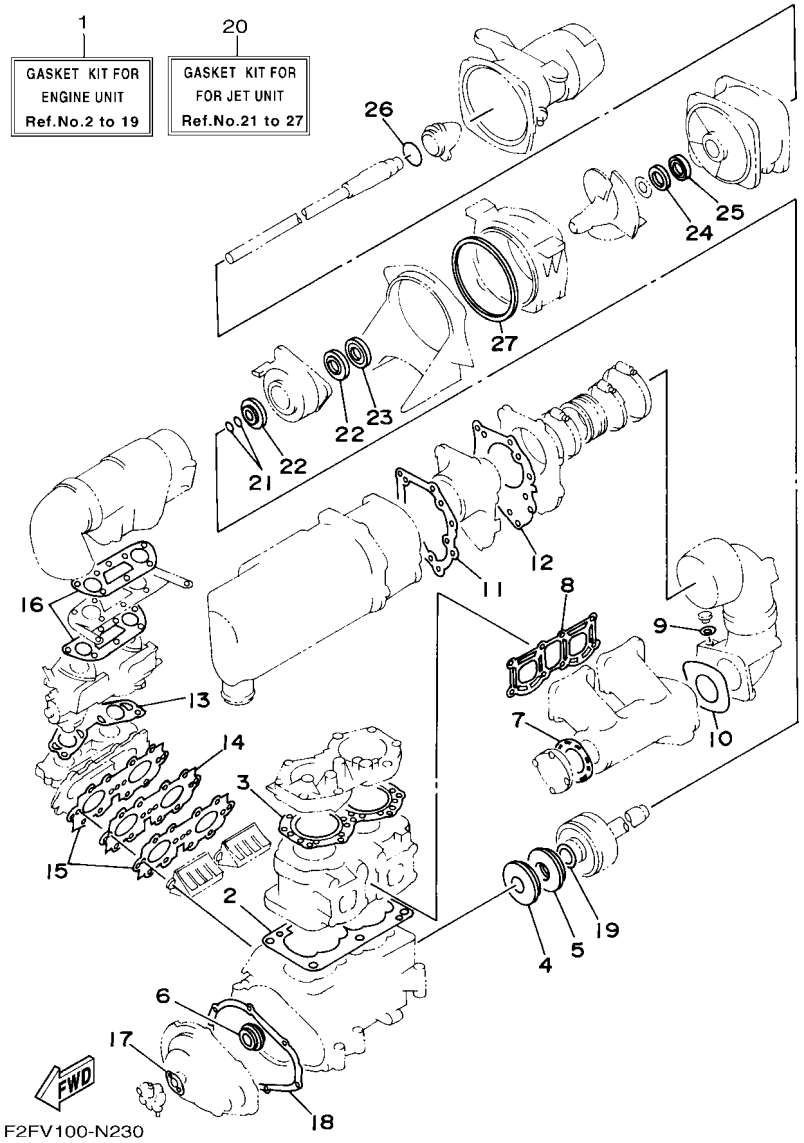

FIG. 23 REPAIR KIT 1

REF. NO.	PART NO.	DESCRIPTION	F4DA	F4DB				REMARKS
1	64U–W0001–00	GASKET KIT FOR ENGINE UNIT	1	1				
2	6M6–11351–A2	.GASKET, CYLINDER	1	1				
3	62T–11181–01	.GASKET, CYLINDER HEAD 1	1	1				
4	93102–36M33	.OIL SEAL	1	1				
5	93101–36M46	.OIL SEAL	1	1				
6	93103–32M01	.OIL SEAL	1	1				
7	6M6–14739–A2	.GASKET, MUFFLER DAMPER 1	1	1				
8	61X–14613–A1	.GASKET, EXHAUST PIPE	1	1				
9	90430–08003	.GASKET	1	1				
10	6R7–14749–A1	.GASKET, MUFFLER DAMPER 2	1	1				
11	6R7–14755–A0	.GASKET, SILENCER	1	1				
12	6R7–41114–A0	.GASKET, EXHAUST OUTER COVER	1	1				
13	62T–13556–00	.GASKET, MANIFOLD	1	1				
14	62T–13624–00	.PLATE,REED VALVE	1	1				
15	62T–13566–00	.GASKET	2	2				
16	62T–13674–00	.GASKET, AIR COOLER COVER 1	2	2				
17	6R8–13116–A0	.GASKET, PUMP CASE	1	1				
18	6M6–81365–A0	.GASKET, HOLE COVER	1	1				
19	62T–45127–00	.SEAL	1	1				
20	61X–W0001–22	GASKETKIT FOR JET UNIT	1	1				
21	93210–17MA4	.O-RING	2	2				
22	93101–25M55	.OIL SEAL	2	2				
23	93101–25M56	.OIL SEAL	1	1				
24	93102–25M34	.OIL SEAL	1	1				
25	93101–25M50	.OIL SEAL	1	1				
26	93210–46M16	.O-RING	1	1				
27	6R7–51117–01	.PACKING	1	1				

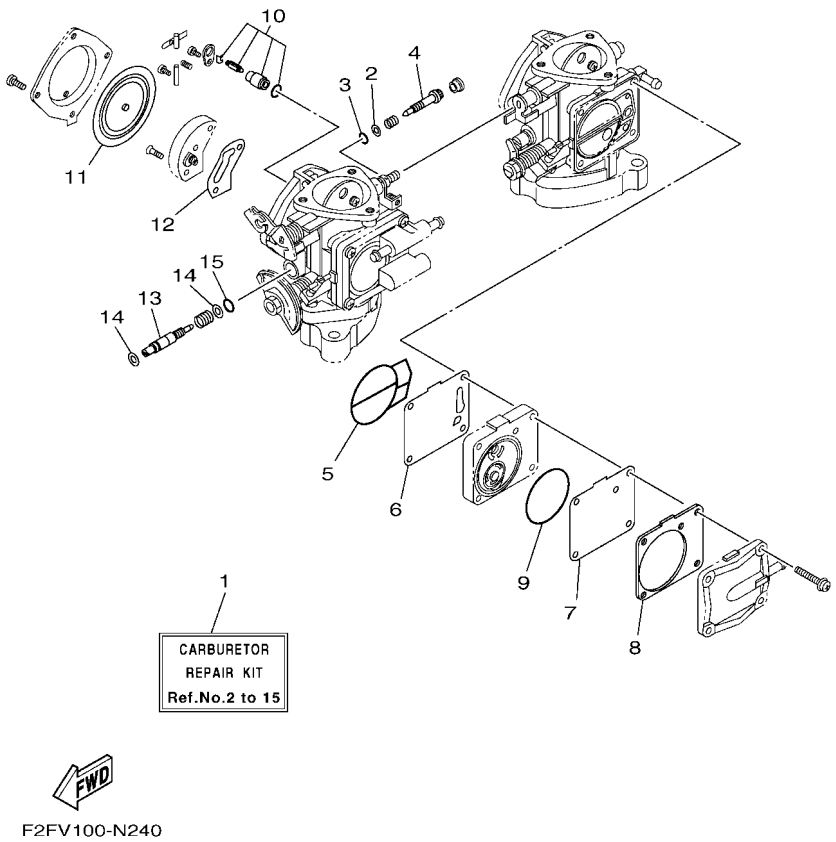

FIG. 24 REPAIR KIT 2

REF. NO.	PART NO.	DESCRIPTION	F4DA	F4DB				REMARKS
1	64U–W0093–03	CARBURETOR REPAIR KIT	1	1				
2	812–14235–00	.WASHER, NEEDLE	4	4				
3	812–14147–00	.O-RING	2	2				
4	63M–14946–00	.PLATE, NEEDLE FITTING	2	2				
5	6K8–14564–00	.O-RING	2	2				
6	6K8–24411–20	.DIAPHRAGM	1	1				
7	6K8–24421–10	.VALVE, CHECK	1	1				
8	6K8–24431–20	.GASKET, FUEL PUMP 1	1	1				
9	6K8–14563–00	.O-RING	1	1				
10	61X–14916–16	.JET NEEDLE COMP.	2	2				
11	6R7–14541–00	.DIAPHRAGM, PUMP	2	2				
12	6K8–14536–11	.GASKET	2	2				
13	64U–14923–00	.SCREW, PILOT	2	2				
14	822–14235–00	.WASHER, NEEDLE	4	4				
15	583–14561–00	.O-RING	2	2				

PART NO.	REF. NO.
64U–11111–00–8S	1 – 8
62T–11181–01	1 – 11
	23 – 3
61X–11311–01–8S	1 – 1
6E5–11325–00	1 – 2
6M6–11351–A2	1 – 5
	23 – 2
61X–11400–03	2 – 1
6M6–11412–00	2 – 2
6M6–11422–00	2 – 3
6M6–11431–10	2 – 4
6M6–11442–01	2 – 5
65U–11515–00	2 – 10
61X–11603–01	2 – 19
61X–11604–01	2 – 19
61X–11605–01	2 – 19
61X–11631–02–93	2 – 18
61X–11633–00	2 – 20
61X–11635–02	2 – 18
61X–11636–02	2 – 18
64X–11651–01	2 – 7
82M–11685–00	2 – 8
63M–12580–00	5 – 26
64X–12581–00	5 – 28
6R8–13116–A0	23 – 17
62T–13555–00–94	3 – 6
62T–13556–00	3 – 5
	23 – 13
62T–13566–00	3 – 8
	23 – 15
62T–13610–00	3 – 13
62T–13624–00	3 – 7
	23 – 14
62T–13674–00	3 – 27
	23 – 16
47X–14133–00	4 – 3
812–14147–00	4 – 6
	24 – 3
439–14186–00	4 – 28
830–14231–14	4 – 25
3G2–14231–26	4 – 11
	4 – 12
812–14235–00	4 – 4
	24 – 2
822–14235–00	4 – 41
	24 – 14
62T–14243–01	3 – 16
62T–14251–10	1 – 17

PART NO.	REF. NO.
6R7–14253–00	4 – 34
62T–14255–00	3 – 28
62T–14283–01	3 – 32
62T–14284–10–8S	3 – 24
64U–14301–03	4 – 1
64U–14302–03	4 – 2
62T–14419–00	3 – 33
62T–14435–00	3 – 35
62T–14451–00	3 – 31
6K8–14471–10	4 – 8
6R7–14485–00	1 – 10
	5 – 32
6M6–14503–00	4 – 10
6K8–14503–02	4 – 23
6K8–14521–01	4 – 43
6M6–14521–01	4 – 5
6K8–14521–10	4 – 24
6K8–14523–11	4 – 30
62T–14527–02	3 – 19
6K8–14527–11	4 – 27
6K8–14536–11	4 – 37
	24 – 12
6R7–14541–00	4 – 35
	24 – 11
6R7–14542–00	4 – 36
6K8–14547–01	4 – 33
583–14561–00	4 – 42
	24 – 15
6K8–14563–00	4 – 22
	24 – 9
6K8–14564–00	4 – 13
	24 – 5
6R7–14569–00	4 – 31
6K8–14589–00	4 – 40
61X–14613–A1	5 – 7
	23 – 8
61L–14615–00	5 – 44
61L–14625–A0	5 – 45
61X–14711–02–94	5 – 1
61L–14712–00–94	5 – 10
6M6–14718–01–8S	5 – 3
6R7–14721–00–8S	5 – 31
6M6–14739–A2	5 – 6
	23 – 7
6R7–14749–A1	5 – 18
	23 – 10
64V–14752–00	5 – 52
6R7–14753–00–8S	5 – 33

PART NO.	REF. NO.
6R7–14755–A0	5 – 38
	23 – 11
6R7–14755–A0	5 – 48
6R7–14785–00–8S	5 – 37
61X–14916–16	4 – 32
	24 – 10
64U–14923–00	4 – 39
	24 – 13
3KW–14932–00	4 – 9
63M–14946–00	4 – 7
	24 – 4
62T–15100–00–8S	1 – 16
6R7–15761–00	5 – 34
6R7–21415–01–94	1 – 23
6R7–21425–01–94	1 – 25
EU0–23814–02	19 – 20
62T–24313–01	3 – 1
62T–24314–01	3 – 22
6E5–24378–00	5 – 20
6K8–24411–20	4 – 14
	24 – 6
6R7–24412–02	4 – 29
6M6–24413–02	4 – 15
65U–24421–00	4 – 16
6K8–24421–10	4 – 18
	24 – 7
6K8–24431–20	4 – 19
	24 – 8
6K8–24452–10	4 – 20
70R–24489–00	16 – 22
65U–24492–00	4 – 17
6K8–24500–02	6 – 9
6R7–24524–00	6 – 10
70R–24543–00	16 – 21
6K8–24560–21	6 – 8
6R7–41113–00–8S	5 – 39
6R7–41114–A0	5 – 40
	23 – 12
6R7–44517–00–8S	1 – 29
6BA–44532–00	1 – 20
663–45119–00	3 – 18
62T–45127–00	2 – 25
	23 – 19
61X–45332–03–94	8 – 5
61L–45378–00	8 – 6
6BA–45511–00	7 – 12
62T–45526–00	2 – 13
6M6–45813–22–8P	2 – 29

PART NO.	REF. NO.
6M6–45813–32–8P	2 – 24
61X–4581J–00	2 – 28
6R7–51117–01	7 – 28
	23 – 27
62T–51129–00	7 – 15
6K8–51129–00	1 – 9
	5 – 2
	5 – 11
	7 – 4
	7 – 14
6K8–51162–00	14 – 3
62T–51190–01–94	7 – 30
6R7–51311–00	7 – 27
6R7–51312–03–94	7 – 1
6BA–51313–00	7 – 20
62T–51315–01–94	7 – 3
64R–51318–01–94	7 – 13
6BA–51321–00	7 – 17
6R7–51323–02	8 – 3
62T–51326–10	7 – 8
6R7–51333–00	7 – 26
62T–51348–00	7 – 18
61X–51381–00	8 – 11
6BA–51387–00	7 – 34
6BA–51673–00	7 – 41
61L–5169A–00	3 – 17
FX1–61105–00	20 – 9
FX1–61337–00	20 – 6
FX1–61338–00	20 – 22
GM6–6133B–00	20 – 25
FX1–6133C–13	20 – 15
EW2–61344–01	20 – 27
FX1–6134L–00	20 – 26
FX1–61391–00	20 – 30
EW2–61395–30	20 – 10
EW2–61417–00	19 – 29
EW2–61419–00	19 – 30
GM6–6142A–40	20 – 13
EU0–61435–00	18 – 13
EU0–61436–00	18 – 9
EU0–61438–00	18 – 10
FX1–6143D–20	19 – 24
FX1–6143E–20	19 – 25
EU0–61446–00	18 – 11
F2F–61461–00	18 – 3
EU0–61461–02	19 – 22
EU0–61461–30	18 – 2
EW2–61465–00	20 – 23

PART NO.	REF. NO.
FX1–61468–00	20 – 2
F2F–61481–00	18 – 1
EU0–61486–00	18 – 12
F2F–61541–00	19 – 19
F2F–61552–00	19 – 1
EW2–61553–00	19 – 15
FN8–61651–01	15 – 16
EU0–61652–00	5 – 56
	14 – 7
	15 – 17
GP7–61652–00	17 – 12
EW2–62137–00	13 – 5
GM6–6213F–00	13 – 4
EW2–62142–00	16 – 20
EW2–62149–00	12 – 8
F2F–6214A–00	16 – 19
EW2–62150–00	16 – 25
GM6–6215G–00	20 – 19
GM6–62501–10	15 – 1
GM6–6251D–10	15 – 7
GM6–6251E–10	15 – 8
F2F–6252C–00	15 – 13
GM6–6252D–10	15 – 14
F2F–62552–00	15 – 5
GM6–62664–01	13 – 27
EU0–62694–00	18 – 14
FN8–6269B–00	14 – 6
EW2–62723–30	7 – 51
F2F–6273B–01	7 – 52
EW2–62840–10	13 – 28
EW2–62843–00	13 – 31
EW2–62845–10	13 – 29
EW2–62846–00	13 – 30
EW2–62847–00	13 – 32
EW2–62848–00	13 – 33
A00–62858–02	13 – 19
F2F–6351B–00	15 – 18
GM6–6351C–00	15 – 19
GM6–6351D–00	15 – 20
GM6–6351E–10	15 – 23
GM6–63844–00	17 – 8
GM6–6411H–00	21 – 12
F1N–6413S–00	22 – 13
F1N–6415B–10	22 – 1
GA7–6416H–20	22 – 10
F4D–6417B–20	21 – 1
F4D–6417B–30	21 – 2
F4D–6417B–40	21 – 1

PART NO.	REF. NO.
F4D–6417B–50	21 – 2
F4D–6417C–20	21 – 3
F4D–6417C–30	21 – 4
F4D–6417C–40	21 – 3
F4D–6417C–50	21 – 4
F4D–6417D–20	21 – 5
F4D–6417D–30	21 – 6
F4D–6417D–40	21 – 5
F4D–6417D–50	21 – 6
F4D–6417E–20	21 – 7
F4D–6417E–30	21 – 8
F4D–6417E–40	21 – 7
F4D–6417E–50	21 – 8
F4D–6417F–00	21 – 9
F4D–6417F–10	21 – 9
F4D–6417G–40	21 – 10
F4D–6417G–50	21 – 11
F2F–6417G–80	21 – 10
F2F–6417G–90	21 – 11
GM6–6418D–00	16 – 1
F2F–6418F–00	22 – 12
GM6–641B1–10	22 – 3
GM6–641B1–21	22 – 2
GM6–641B1–41	22 – 4
GM6–641B1–50	22 – 5
GM6–641B2–00	22 – 6
GM6–641B2–10	22 – 7
GM6–641B2–40	22 – 8
GM6–641B2–50	22 – 9
F1N–641DB–10	22 – 11
F2F–6491A–09–P2	20 – 1
FX1–6492E–10	20 – 4
GM6–6492J–41	20 – 31
GM6–64949–00	20 – 35
FX1–65116–10	13 – 2
GM6–65135–00	20 – 20
GM6–65136–00	13 – 21
EW2–65137–00	13 – 22
FX1–6514B–00	13 – 24
FX1–6514F–00	13 – 16
F4D–6516A–00–P1	13 – 1
GM6–6516C–00	13 – 3
FX1–6517D–00	13 – 10
GM6–6521C–10	15 – 21
GM6–6521D–10	15 – 22
FX1–65760–00	16 – 30
	17 – 4
EW2–65772–00	16 – 29

PART NO.	REF. NO.
EW2–65772–00	17 – 5
EU0–65901–02	21 – 14
EW2–65912–00	13 – 8
EW2–65913–00	13 – 9
F2F–6591A–00	13 – 7
FX1–6591K–00	13 – 13
F1N–65938–00	6 – 25
EU0–65986–03	21 – 13
GM6–65987–00	21 – 15
GM6–67242–00	18 – 7
GD0–67249–A0	8 – 17
GD0–67249–B0	8 – 17
EW2–67250–02	19 – 2
GM6–67252–00	18 – 6
EW2–67255–00	19 – 3
EW2–67256–00	19 – 4
EW2–67257–01	19 – 5
EW2–67258–01	19 – 6
EW2–67259–01	19 – 7
EU0–67324–00	1 – 32
EU0–67354–C0	1 – 33
EW2–67354–C0	7 – 46
EU0–67354–D0	1 – 33
EW2–67354–D0	7 – 46
EU0–67354–E0	1 – 33
GH7–6753B–00	17 – 11
F2F–67550–00	17 – 1
GM6–67555–00	17 – 7
GM6–6755J–00	17 – 2
GM6–67565–00	17 – 15
GM6–67593–00	16 – 34
F2F–6759B–00	16 – 35
EU0–67613–00	14 – 9
EW2–67618–00	14 – 10
EW2–67711–01	16 – 2
FJ0–67713–00	16 – 3
EW2–67714–02	16 – 5
EW2–67716–02	16 – 4
GM6–6773E–00	6 – 18
EU0–67767–31	16 – 16
EU0–67816–30	6 – 24
EU0–67817–00	6 – 27
EW2–67821–00	16 – 27
EW2–67821–30	16 – 28
EW2–67822–01	16 – 36
FN8–67831–01	16 – 38
EU0–67832–00	16 – 39
FN8–67833–00	16 – 40

PART NO.	REF. NO.
EU0–67834–00	16 – 43
EU0–67835–00	16 – 41
EU0–67839–00	16 – 42
GM6–67844–11	16 – 32
EU0–67869–00	16 – 45
EW2–68156–00	11 – 1
EW2–68211–00	12 – 2
EU0–68218–04	12 – 7
	17 – 3
EU0–68221–00	12 – 3
EW2–68221–00	12 – 5
EU0–68221–30	12 – 4
EW2–68310–04	19 – 9
FK7–68312–02	19 – 12
FK7–68313–02	19 – 13
EW2–68348–00	19 – 10
6M6–8132W–00	11 – 11
6M6–81337–00–8S	9 – 14
6M6–81365–A0	9 – 16
	23 – 18
6M6–81800–10	10 – 1
3AJ–81809–00	10 – 2
6M6–81820–00	10 – 7
6M6–81826–00	10 – 5
6M6–81830–00	10 – 8
6M6–8183E–01	10 – 15
6M6–81840–10	10 – 3
11H–81844–00	10 – 4
6M6–81844–00	11 – 10
26H–81847–00	10 – 9
6M6–81850–00	10 – 6
6M6–81865–00	10 – 17
6M6–81866–00	10 – 16
6M6–81921–00	11 – 9
68N–81940–00	11 – 18
6M6–81960–A0	11 – 22
EU0–82110–09	12 – 1
64V–82117–00	12 – 12
6R7–82117–11	12 – 13
62E–82117–20	11 – 41
6K8–82150–01	11 – 13
6G1–82151–00	11 – 14
6K8–82159–00	11 – 15
62E–82351–01	11 – 26
62E–82352–01	11 – 28
6R7–82361–01	11 – 35
62E–82371–11	11 – 25
	11 – 27

PART NO.	REF. NO.
6R7–82553–01	11 – 37
6R7–82560–11	11 – 38
6R7–82560–11	11 – 8
682–84385–01	5 – 29
62T–85515–00	9 – 6
62T–85520–01	9 – 3
6M6–8552A–01–8P	11 – 6
6M6–8552E–01	11 – 7
62T–85533–00	9 – 4
62T–85540–01	11 – 16
6AA–85542–00	9 – 21
	9 – 26
62T–85550–00	9 – 1
62T–85560–00	9 – 2
62E–85570–11	11 – 24
6M6–85580–00	9 – 5
67X–E2590–10	5 – 54
64U–W0001–00	23 – 1
61X–W0001–22	23 – 20
62T–W0004–00	3 – 14
64V–W0090–02–8S	1 – 15
64U–W0093–03	24 – 1
90105–06900	16 – 31
	17 – 6
90105–08902	19 – 21
90105–10M49	5 – 49
90105–10M88	5 – 50
90109–08M56	1 – 21
90109–10M44	9 – 13
90111–05037	3 – 15
90116–08M60	3 – 3
90119–05923	13 – 35
90119–05M02	3 – 34
90119–06900	13 – 23
	20 – 21
90119–06908	7 – 44
	11 – 2
	20 – 14
90119–06913	20 – 3
90119–06915	7 – 43
90119–06920	12 – 6
90119–06M70	7 – 19
90119–06MA1	5 – 43
90119–08038	1 – 31
90119–08904	1 – 30
90119–08907	8 – 16
90119–08943	7 – 53
90119–08M55	1 – 19

PART NO.	REF. NO.
90119–08M96	1 – 12
90119–10948	7 – 45
90119–10M00	1 – 27
90119–10M01	1 – 26
90119–10M02	1 – 24
90119–10M03	1 – 28
90119–10M07	1 – 7
90119–10M17	5 – 51
90119–10M56	1 – 6
90149–05937	19 – 26
90149–05959	19 – 17
90149–05960	15 – 9
90149–05962	15 – 6
90149–06997	20 – 5
90159–05900	19 – 8
90170–14913	20 – 28
90170–22187	6 – 29
90179–05964	15 – 12
90179–06947	7 – 47
90179–08962	7 – 48
90179–08M15	3 – 4
90179–10925	7 – 50
90179–12933	19 – 31
90201–05928	19 – 18
90201–06906	18 – 5
90201–06M31	7 – 39
90201–11008	18 – 8
90201–20M04	2 – 21
90201–24M02	2 – 30
90209–12920	18 – 16
90267–40935	16 – 44
90267–40945	18 – 15
90267–48925	6 – 21
	16 – 23
90267–48930	17 – 16
90267–48932	15 – 15
90267–48938	13 – 25
90267–48940	6 – 26
90267–48963	15 – 24
90280–05013	9 – 12
90340–08002	5 – 12
90380–12M29	1 – 18
	9 – 15
90387–06289	8 – 12
90387–06916	20 – 34
90387–06M05	9 – 23
	9 – 28
90387–08M06	7 – 23

PART NO.	REF. NO.
90387–08M08	7 – 33
90430–08003	5 – 13
	23 – 9
90445–07M19	1 – 13
90445–09M17	8 – 1
90445–10M98	6 – 13
90445–10ME3	6 – 11
90445–10ME4	6 – 15
90445–10ME8	6 – 1
90445–10MF1	6 – 5
90445–11055	16 – 6
90445–14M04	14 – 5
90445–14M05	5 – 27
90445–14M12	7 – 24
90445–14M14	5 – 24
90445–14M24	14 – 1
90445–14M29	5 – 19
	5 – 21
90445–14M33	5 – 22
90446–14M23	6 – 2
90446–14M30	16 – 14
90446–14M64	6 – 6
90450–14M05	5 – 25
	5 – 55
	7 – 25
90450–18M09	5 – 30
90460–64M15	5 – 53
90460–70M16	5 – 47
90460–90M11	5 – 46
90464–06M29	11 – 17
90464–08M07	6 – 3
90464–20258	13 – 26
90465–06M86	11 – 23
90465–11M10	3 – 2
	3 – 23
	5 – 23
	6 – 7
	6 – 12
	6 – 14
	6 – 16
	6 – 17
	7 – 42
	8 – 2
	11 – 30
	12 – 11
	14 – 2
	16 – 17
	16 – 26

PART NO.	REF. NO.
90465–11M10	17 – 14
90465–12M56	6 – 4
90465–13M11	11 – 42
	14 – 4
	14 – 12
	16 – 15
	19 – 32
90465–13M97	9 – 22
	9 – 27
90467–06016	1 – 14
90467–08M10	12 – 10
90467–11032	16 – 8
90480–06M43	11 – 29
90480–06M69	8 – 14
90501–14M73	10 – 21
90560–22281	19 – 16
90600–91728	19 – 27
90600–91736	6 – 20
90600–91755	14 – 8
90601–11062	16 – 7
90601–15573	16 – 33
90601–16274	16 – 12
90601–16875	13 – 6
	17 – 9
	17 – 10
90601–20006	6 – 19
	6 – 22
	20 – 24
90601–20016	6 – 23
90601–20024	5 – 57
90699–50003	16 – 13
90699–50045	16 – 24
90699–50085	12 – 9
90699–50120	16 – 18
91490–16010	16 – 11
91790–05040	16 – 9
92903–06600	3 – 10
	3 – 12
	3 – 21
	3 – 26
	3 – 30
	5 – 5
	5 – 36
	10 – 20
92903–08600	5 – 9
	5 – 15
	5 – 17
	10 – 12

PART NO.	REF. NO.
92990–05100	15 – 11
	20 – 12
92990–05200	15 – 10
92990–05600	16 – 10
92990–06100	10 – 13
	13 – 12
	13 – 15
	15 – 3
	19 – 23
92990–06200	13 – 17
	15 – 2
	20 – 7
	20 – 33
	20 – 36
92990–06600	9 – 11
	11 – 32
	11 – 34
92990–08100	11 – 5
	20 – 17
92990–08200	11 – 4
92990–14200	17 – 13
	20 – 29
92995–06100	11 – 20
	11 – 40
92995–06600	5 – 42
	7 – 11
	7 – 36
	7 – 38
	9 – 18
	9 – 20
	9 – 25
	11 – 21
92995–08600	7 – 22
	7 – 32
93101–25M50	7 – 7
	23 – 25
93101–25M55	8 – 7
	23 – 22
93101–25M56	8 – 8
	23 – 23
93101–36M46	2 – 16
	23 – 5
93102–25M34	7 – 6
	23 – 24
93102–36M33	2 – 15
	23 – 4
93103–32M01	2 – 17
	23 – 6

PART NO.	REF. NO.
93210–13M63	3 – 36
93210–17MA4	8 – 4
	23 – 21
93210–44003	7 – 9
93210–46M16	23 – 26
93305–30601	2 – 6
93306–205U0	7 – 5
93306–205U6	8 – 10
93306–207U2	2 – 9
93306–307U3	2 – 12
93310–320U2	2 – 22
93310–525U0	2 – 11
93430–47M04	8 – 9
93440–25M08	10 – 18
93440–80023	2 – 14
93450–18M06	10 – 19
93450–21053	2 – 23
93603–10049	2 – 26
93604–07141	2 – 27
93606–07M17	7 – 29
93606–12019	1 – 4
	1 – 22
	7 – 2
	7 – 16
	8 – 15
	9 – 29
94702–00272	11 – 36
95380–06700	7 – 40
	10 – 14
	18 – 4
95380–06800	15 – 4
95380–08600	11 – 3
95680–08630	20 – 16
95720–05300	13 – 34
95720–06300	13 – 18
	20 – 8
	20 – 37
95720–08300	20 – 18
97013–06012	3 – 29
97013–06016	3 – 20
97013–06020	3 – 25
	5 – 35
97013–06025	3 – 11
	5 – 4
97013–06035	3 – 9
97013–08025	5 – 16
97013–08035	5 – 8
	10 – 11

PART NO.	REF. NO.
97013–08090	5 – 14
97090–06014	13 – 11
97090–06014	11 – 19
97095–06014	7 – 35
97095–06016	5 – 41
	11 – 39
97095–06020	7 – 10
	7 – 37
97095–06025	9 – 17
97095–06035	9 – 19
	9 – 24
97095–08018	7 – 31
97095–08020	7 – 21
97513–08540	10 – 10
97595–06525	8 – 13
97780–50114	14 – 11
	16 – 37
97780–50316	13 – 20
97780–60120	7 – 49
97780–60520	20 – 32
97780–60525	11 – 12
97802–04008	9 – 9
97880–03008	19 – 11
97880–05012	4 – 38
	20 – 11
97880–05025	19 – 14
97880–06016	9 – 10
	11 – 33
	13 – 14
97880–06030	11 – 31
97902–04122	9 – 8
97902–05125	9 – 7
97980–05330	4 – 21
98580–05018	4 – 26
98780–04015	1 – 3
98980–04008	6 – 28
98980–04010	19 – 28