YAMAHA

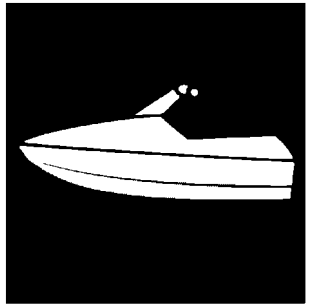

PARTS CATALOGUE

WaveRunner VX Cruiser HO

VC1800-S (F4E3 /6FGC/6FG1)

VC1800-S (F4E4 /6FGD/6FG1)

1SF4E-100E1

( )

YAMAHA GENUINE Parts & Accessories

2017/10/13

NEWS NO.	DATE	COMMENT
PE0-WV-170005	Sep.,19,2017	COR:F2X,F2W,F4E,F4G,F3Y JET UNIT 2 LIST/ILLUST. CORRECTION

VC1800-S
PARTS CATALOGUE
©2016 by Yamaha Motor Co., Ltd.
1st edition, July 2016
All rights reserved.
Any reprinting or unauthorized use
without the written permission of
Yamaha Motor Co., Ltd.
is expressly prohibited.
Printed in Japan.

FOREWORD

This Parts Catalogue is related to the parts for the model(s) on the cover page. When you are ordering replacement parts, please refer to this Parts Catalogue and quote both part numbers and part names correctly.

1. Modifications or additions which have been made after the issue of the Parts Catalogue will be announced in the Parts News.
   It is advisable that you make the necessary corrections to the Parts Catalogue according to the Parts News.

2. Abbreviations
   The following abbreviations are used in this Parts Catalogue.

   "UR" Use specified parts number.

   "UN" Use as many as needed.

   "AP" Alternate Parts

   "LM" Locally Made (Parts need to be ordered locally)

   "F#" Frame No. (Applicable machine No.)

   "O/S" Over Size

3. The number of components for assembly
   - Parts, which are to be supplied in an assembly, are listed with a dot (.) in front of the part name as shown below.
   - The numeral appearing to the right of each component part indicates the quantity of parts for each assembly unit.

PART NO.	DESCRIPTION	Q'TY	REMARKS
2F5–83310–60	FRONT FLASHER LIGHT ASSY	2	
115–83311–60	.BULB (6V–18W)	1	

4. Applicable colours of graphics are represented in the "REMARKS" as shown below.

PART NO.	DESCRIPTION	Q'TY	REMARKS
2N4–24110–00–X5	FUEL TANK COMP.	2	MXR
3J1–24240–10	.GRAPHIC, FUEL TANK	1	FOR MXR

5. Note that the illustrations for reference in finding parts numbers are not to be used for assembling. When assembling, please use the applicable service manual.

6. The asterisk (*) before a reference number indicates modified items after the first edition.

7. Applicable Serial No.

Engine Serial No.

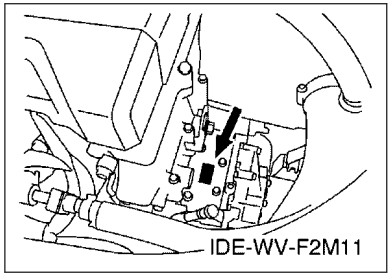

Primary Identification No.

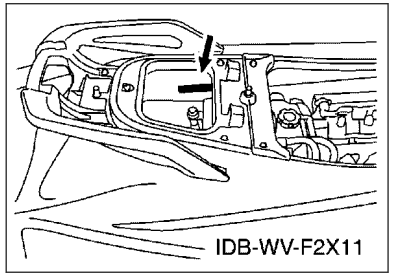

8. Applicable Colour Code (The (*) mark shows Model colour.)

Abbreviation	Colour Name	Colour Code
DNMC(*)	DARK GRAY METALLIC C	0922
PURW(*)	PURE WHITE	0240

9. Quantity Column Information

Column No.	Name Of Q'ty Column	Destination
1	F4E3	CANADA
2	F4E4	EUROPE

10. Applicable Starting Serial No.

Engine Serial No.

Serial No.	Name Of Q'ty Column	Model Code

Primary Identification No.

Serial No.	Name Of Q'ty Column	Model Code
F4E-0802701	F4E3	F4E3
F4E-0802701	F4E4	F4E4

CONTENTS

CYLINDER 1.....1
CYLINDER 2.....2
CRANKCASE..... 3
CRANKSHAFT & PISTON.....5
VALVE..... 6
INTAKE 1.....8
INTAKE 2.....10
OIL PUMP.....11
OIL PAN.....12
OIL COOLER.....13
BREATHER OIL..... 14
EXHAUST 1.....15
EXHAUST 2.....16
JET UNIT 1.....18
JET UNIT 2.....20
JET UNIT 3.....21
JET UNIT 4.....22
GENERATOR.....23
STARTING MOTOR..... 24
ELECTRICAL 1.....25
ELECTRICAL 2.....27
ELECTRICAL 3.....29
ENGINE MOUNT.....31
ENGINE HATCH 1.....32
ENGINE HATCH 2.....34
HULL & DECK..... 36
GUNWALE & MAT.....39
VENTILATION..... 41
SEAT & UNDER LOCKER..... 42
FUEL TANK.....44
EXHAUST 3.....46
CONTROL CABLE..... 47
STEERING 1..... 48
STEERING 2..... 49
STEERING 3..... 50
GRAPHICS.....51
IMPORTANT LABELS.....52
REPAIR KIT 1.....53

INDEX

NUMERICAL INDEX.....55

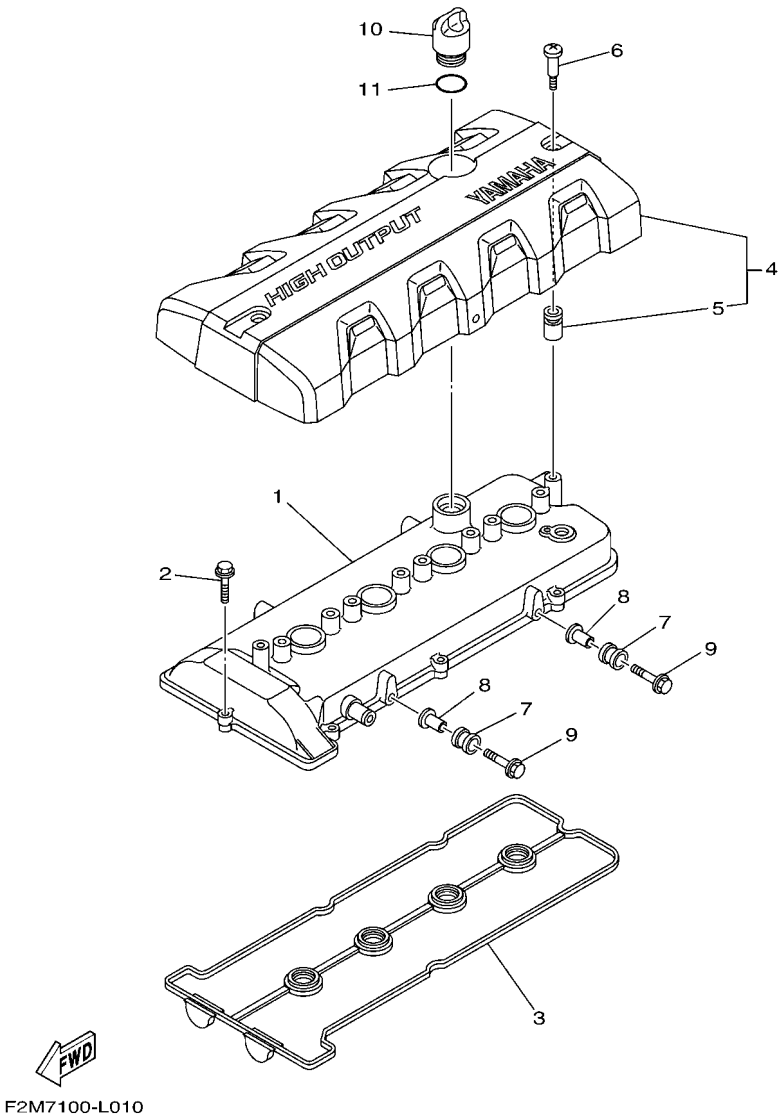

FIG. 1 CYLINDER 1

REF. NO.	PART NO.	DESCRIPTION	F4E3	F4E4				REMARKS
1	6BH–11191–20	COVER, CYLINDER HEAD 1	1	1				
2	90105–06028	BOLT, FLANGE	8	8				
3	6BH–11193–00	GASKET, HEAD COVER 1	1	1				
4	6BH–E110M–00	COVER ASSY 1	1	1				
5	6S5–E1328–00	.GROMMET, ANODE	2	2				
6	6S5–E118E–00	BOLT, COVER MOUNTING	2	2				
7	61N–82317–00	DAMPER, IGNITION COIL	2	2				
8	90387–06119	COLLAR	2	2				
9	95824–06025	BOLT, FLANGE	2	2				
10	6S5–15363–00	PLUG, OIL	1	1				
11	93210–24M79	O-RING	1	1				

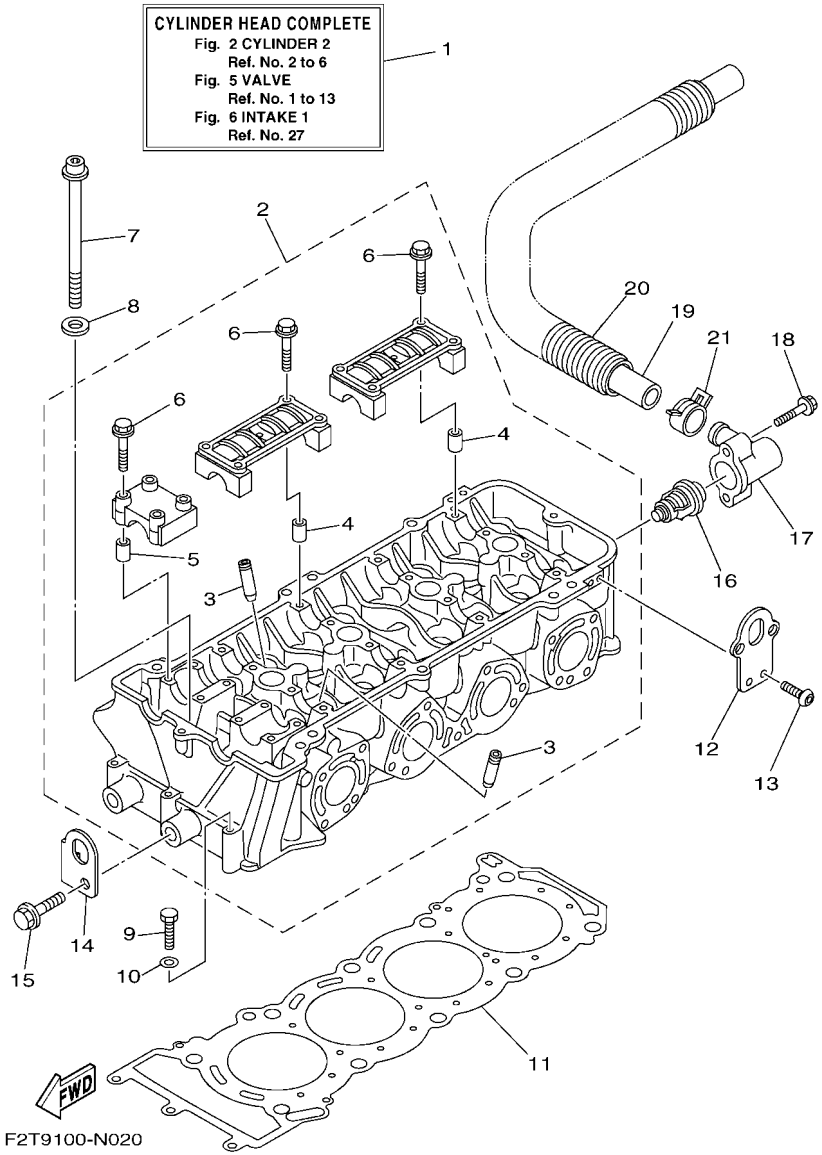

FIG. 2 CYLINDER 2

REF. NO.	PART NO.	DESCRIPTION	F4E3	F4E4				REMARKS
1	6BH–W009A–03–94	CYLINDER HEAD COMPLETE	1	1				
2	6BH–11102–11	CYLINDER HEAD ASSY	1	1				
3	6S5–11133–10	.GUIDE, VALVE 1	16	16				
4	91809–16002	.PIN, DOWEL	8	8				
5	91809–16002	.PIN, DOWEL	4	4				
6	90105–07009	.BOLT, FLANGE	24	24				
7	6S5–12228–01	BOLT	10	10				
8	90201–12039	WASHER, PLATE	10	10				
9	97013–06055	BOLT	3	3				
10	92903–06600	WASHER, PLATE	3	3				
11	6BH–11181–00	GASKET, CYLINDER HEAD 1	1	1				
12	6BH–1111E–00	HANGER, ENGINE 2	2	2				
13	90119–06078	BOLT, WITH WASHER	4	4				
14	6BH–11119–00	HANGER, ENGINE	1	1				
15	97513–10525	BOLT, WITH WASHER	1	1				
16	6D3–12411–00	THERMOSTAT	1	1				
17	6BH–12413–00	COVER, THERMOSTAT	1	1				
18	90105–06035	BOLT, FLANGE	2	2				
19	6S5–12578–00	HOSE 3	1	1				
20	90447–28008	TUBE (L850)	1	1				
21	90467–240A0	CLIP	1	1				

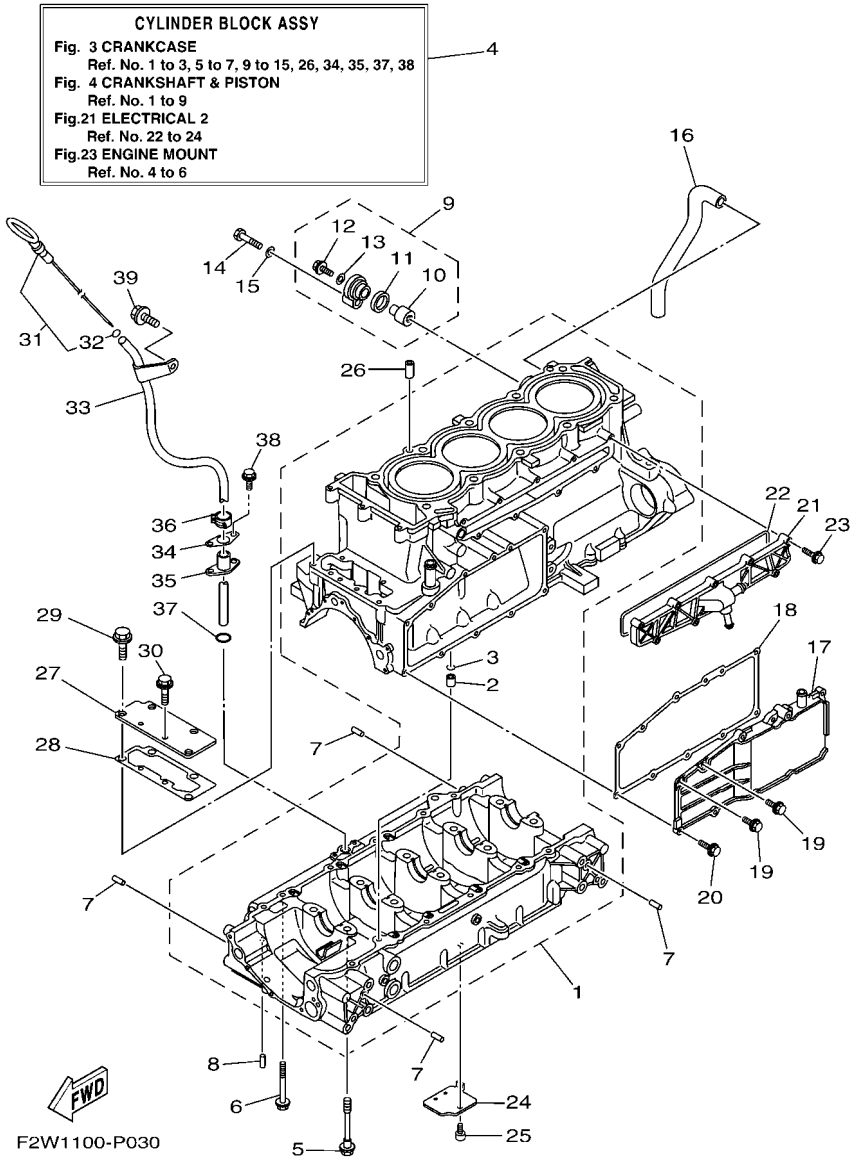

FIG. 3 CRANKCASE

REF. NO.	PART NO.	DESCRIPTION	F4E3	F4E4				REMARKS
1	6CR–15100–11	CRANKCASE ASSY	1	1				
2	99530–10114	.PIN, DOWEL	1	1				
3	93210–11453	.O-RING	1	1				
4	6CR–W009B–11–94	CYLINDER BLOCK ASSY	1	1				
5	90105–10071	BOLT, FLANGE	10	10				
6	95814–06070	BOLT, FLANGE	12	12				
7	93606–12019	PIN, DOWEL	8	8				
8	93604–10M03	PIN, DOWEL	2	2				
9	69J–11301–10	ANODE COVER ASSY	1	1				
10	68V–11325–02	.ANODE	1	1				
11	67F–11328–00	.GROMMET, ANODE	1	1				
12	90105–06M07	.BOLT, FLANGE	1	1				
13	90430–06M03	.GASKET	1	1				
14	97095–08040	BOLT	1	1				
15	92995–08600	WASHER	1	1				
16	6S5–11377–00	HOSE	1	1				
17	6S5–1131M–10–8P	COVER	1	1				
18	6BH–13557–00	GASKET	1	1				
19	95024–06014	BOLT, FLG.(SMALL HEAD)	2	2				
20	95024–06020	BOLT, FLG.(SMALL HEAD)	9	9				
21	6CS–12469–A0	JOINT 1	1	1				
22	6CS–12517–00	GASKET, WATER INLET	1	1				
23	95814–06035	BOLT, FLANGE	9	9				
24	6S5–13337–10	PLATE, BAFFLE LOWER	1	1				
25	90110–06182	BOLT, HEXAGON SOCKET HEAD	1	1				
26	99530–10114	PIN, DOWEL	2	2				
27	6BH–1131C–00	COVER, JOINT	1	1				

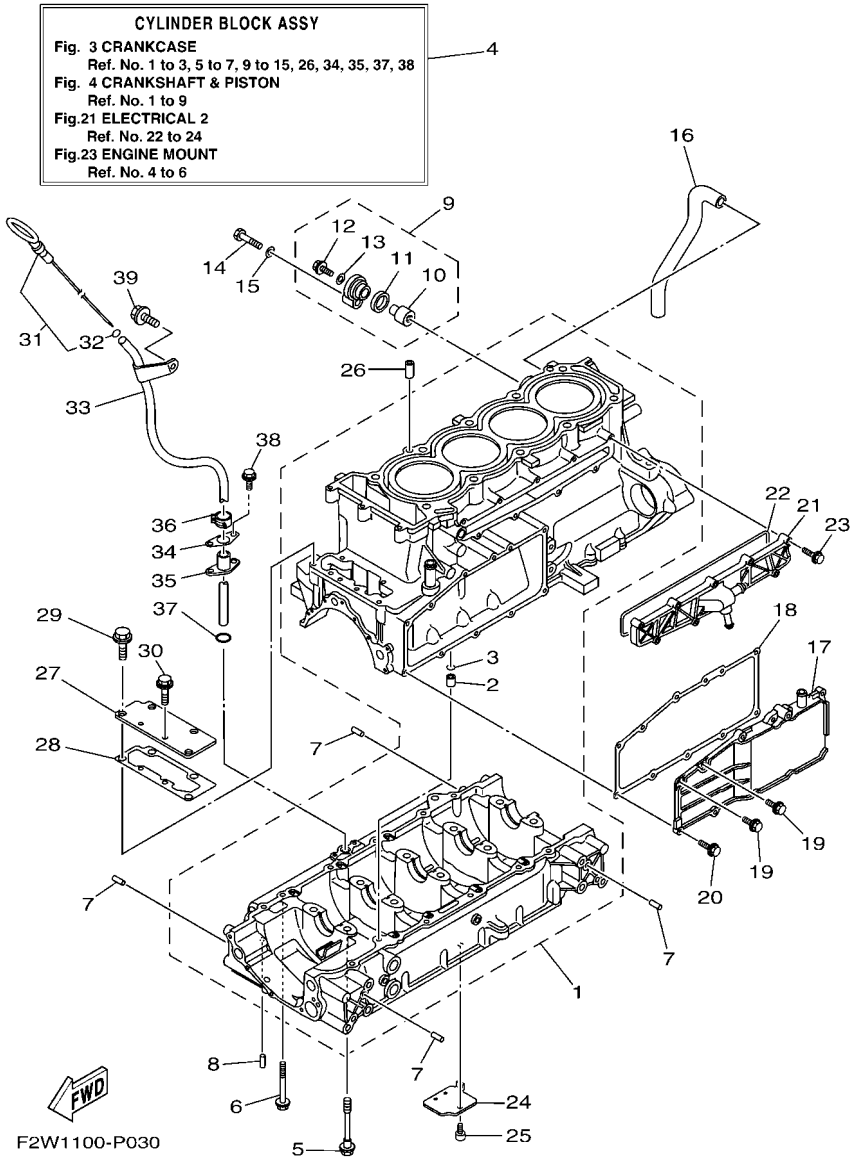

FIG. 3 CRANKCASE

REF. NO.	PART NO.	DESCRIPTION	F4E3	F4E4				REMARKS
28	6BH–1131B–00	GASKET, COVER	1	1				
29	95814–08020	BOLT, FLANGE	4	4				
30	95814–06016	BOLT, FLANGE	2	2				
31	6ET–15362–00	PLUG, OIL LEVEL	1	1				
32	93210–06632	.O-RING	1	1				
33	6CS–8572F–00	PIPE, OIL LEVEL	1	1				
34	6BH–1319K–00	PLATE	1	1				
35	6CS–85516–00	SPACER	1	1				
36	90467–150A1	CLIP	1	1				
37	93210–12016	O-RING	1	1				
38	90109–06268	BOLT	2	2				
39	90105–08021	BOLT, FLANGE	1	1				

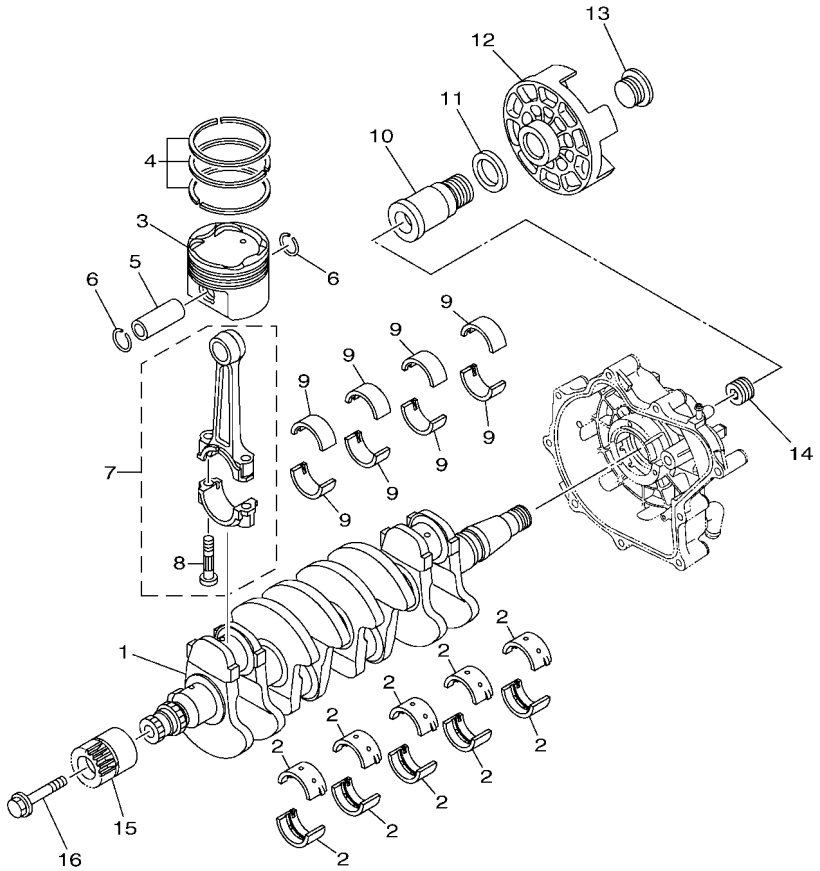

F3A5110-M040

FIG. 4 CRANKSHAFT & PISTON

REF. NO.	PART NO.	DESCRIPTION	F4E3	F4E4				REMARKS
1	6ET–11411–00	CRANKSHAFT	1	1				
2	6S5–11416–00	PLANE BEARING, CRANKSHAFT 1	10	10				UR BROWN
	6S5–11416–10	PLANE BEARING, CRANKSHAFT 1	10	10				UR BLACK
	6S5–11416–20	PLANE BEARING, CRANKSHAFT 1	10	10				UR BLUE
	6S5–11416–30	PLANE BEARING, CRANKSHAFT 1	10	10				UR GREEN
	6S5–11416–40	PLANE BEARING, CRANKSHAFT 1	10	10				UR YELLOW
3	6BH–11631–00–B0	PISTON (STD)	4	4				
4	6S5–11603–00	PISTON RING SET (STD)	4	4				
5	6S5–11633–00	PIN, PISTON	4	4				
6	93450–24028	CIRCLIP	8	8				
7	6BH–11650–10	CONNECTING ROD ASSY	4	4				
8	6S5–11654–10	.BOLT, CONNECTING ROD	2	2				
9	6S5–11656–40	PLANE BEARING, CONNECTING ROD	8	8				UR BLUE
	6S5–11656–50	PLANE BEARING, CONNECTING ROD	8	8				UR BLACK
	6S5–11656–60	PLANE BEARING, CONNECTING ROD	8	8				UR BROWN
	6S5–11656–70	PLANE BEARING, CONNECTING ROD	8	8				UR GREEN
10	6S5–17572–01	SHAFT, TRANSFER	1	1				
11	6S5–12289–00	WASHER	1	1				
12	6S5–45813–01–94	FLANGE, COUPLING	1	1				
13	6S5–17525–01	HOLDER 2	1	1				
14	6S5–11459–01	NUT, SPECIAL	1	1				
15	6BH–17586–11	GEAR, TRANSFER DRIVE	1	1				
16	6S5–17031–01	BOLT	1	1				

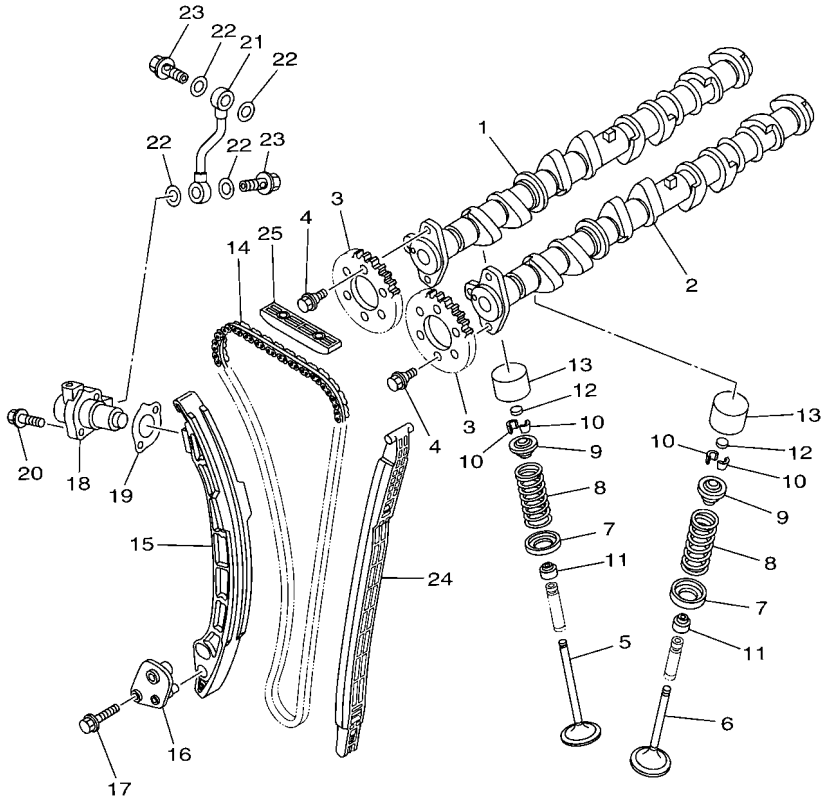

F2H1100-H050

FIG. 5 VALVE

REF. NO.	PART NO.	DESCRIPTION	F4E3	F4E4				REMARKS
1	6BH–12171–10	CAMSHAFT 1	1	1				
2	6BH–12181–10	CAMSHAFT 2	1	1				
3	6ET–12176–00	SPROCKET, CAM CHAIN	2	2				
4	90105–07006	BOLT, FLANGE	4	4				
5	6S5–12111–00	VALVE, INTAKE	8	8				
6	6S5–12121–00	VALVE, EXHAUST	8	8				
7	6S5–12116–00	SEAT, VALVE SPRING	16	16				
8	6S5–12113–00	SPRING, VALVE INNER	16	16				
9	6S5–12117–00	RETAINER, VALVE SPRING	16	16				
10	3LD–12118–00	LOCK, VALVE SPRING RETAINER	32	32				
11	51Y–12119–00	SEAL, VALVE STEM	16	16				
12	3LD–12168–00	PAD, ADJUSTING (1.20)	16	16				UR
	3LD–12168–20	PAD, ADJUSTING (1.25)	16	16				UR
	3LD–12168–40	PAD, ADJUSTING (1.30)	16	16				UR
	3LD–12168–60	PAD, ADJUSTING (1.35)	16	16				UR
	3LD–12168–80	PAD, ADJUSTING (1.40)	16	16				UR
	3LD–12168–A0	PAD, ADJUSTING (1.45)	16	16				UR
	3LD–12168–F0	PAD, ADJUSTING (1.50)	16	16				UR
	3LD–12168–H1	PAD, ADJUSTING (1.55)	16	16				UR
	3LD–12168–K1	PAD, ADJUSTING (1.60)	16	16				UR
	3LD–12168–M1	PAD, ADJUSTING (1.65)	16	16				UR
	3LD–12168–R1	PAD, ADJUSTING (1.70)	16	16				UR
	3LD–12168–U1	PAD, ADJUSTING (1.75)	16	16				UR
	3LD–12168–W1	PAD, ADJUSTING (1.80)	16	16				UR
	3LD–12168–Y1	PAD, ADJUSTING (1.85)	16	16				UR
	3LD–12169–11	PAD, ADJUSTING (1.90)	16	16				UR
	3LD–12169–31	PAD, ADJUSTING (1.95)	16	16				UR

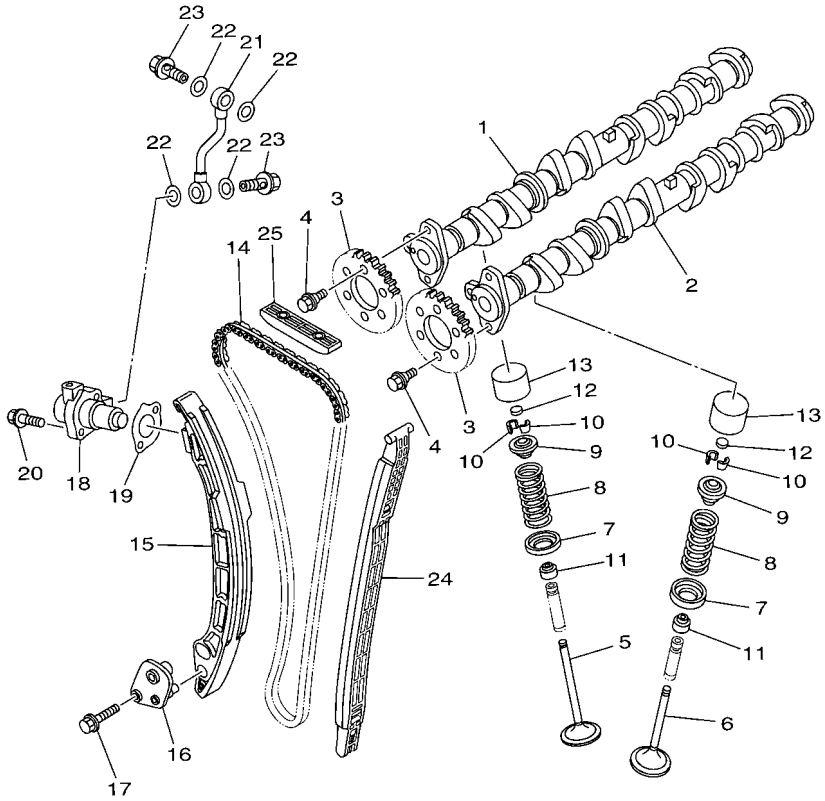

F2H1100-H050

FIG. 5 VALVE

REF. NO.	PART NO.	DESCRIPTION	F4E3	F4E4				REMARKS
12	3LD–12169–50	PAD, ADJUSTING (2.00)	16	16				UR
	3LD–12169–70	PAD, ADJUSTING (2.05)	16	16				UR
	3LD–12169–90	PAD, ADJUSTING (2.10)	16	16				UR
	3LD–12169–E0	PAD, ADJUSTING (2.15)	16	16				UR
	3LD–12169–G0	PAD, ADJUSTING (2.20)	16	16				UR
	3LD–12169–J0	PAD, ADJUSTING (2.25)	16	16				UR
	3LD–12169–L0	PAD, ADJUSTING (2.30)	16	16				UR
13	6S5–12153–00	LIFTER, VALVE	16	16				
14	94591–74152	CHAIN	1	1				
15	6ET–12252–00	DAMPER, CHAIN 2	1	1				
16	6BH–12279–00	PLATE	1	1				
17	95814–06030	BOLT, FLANGE	2	2				
18	6S5–12210–01	TENSIONER ASSY, CAM CHAIN	1	1				
19	6S5–121E2–00	GASKET	1	1				
20	91380–06025	BOLT	2	2				
21	6S5–13418–00	PIPE, OIL 2	1	1				
22	90430–10007	GASKET	4	4				
23	90401–10040	BOLT, UNION	2	2				
24	6ET–12251–00	DAMPER, CHAIN 1	1	1				
25	6BH–12241–00	GUIDE, STOPPER 2	1	1				

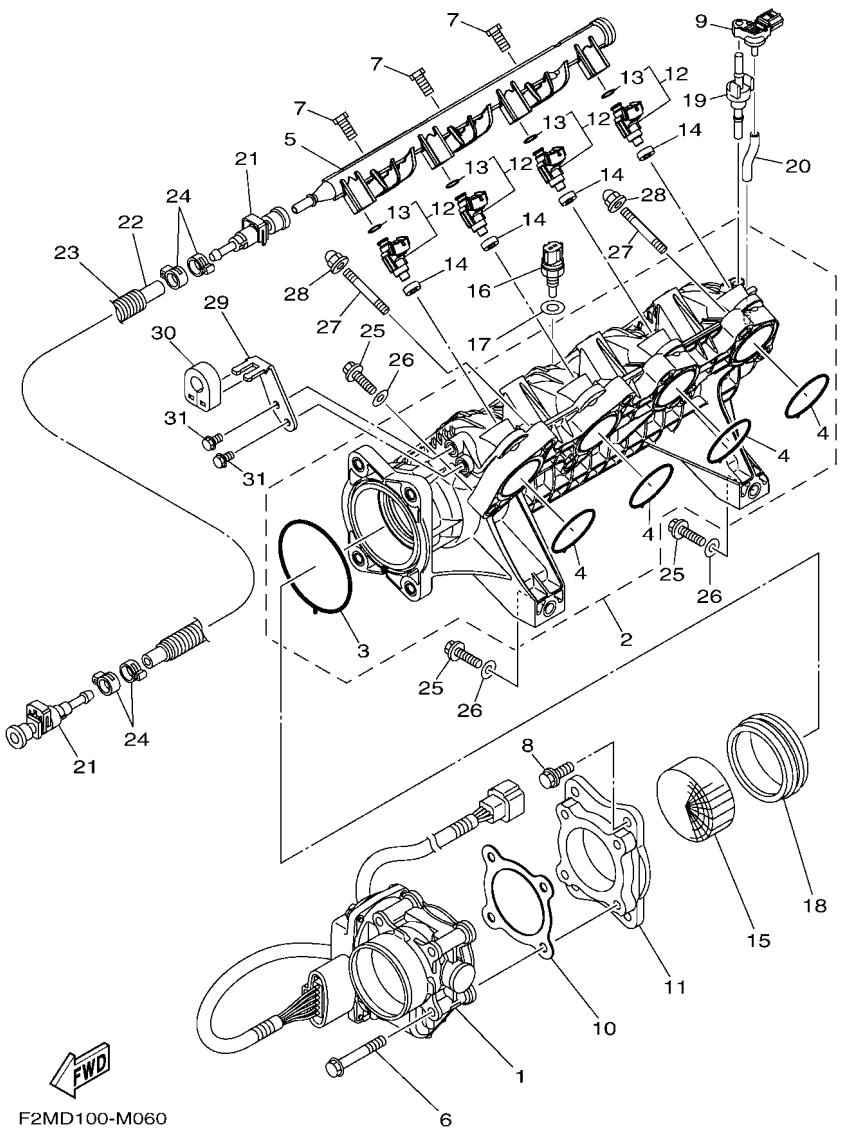

FIG. 6 INTAKE 1

REF. NO.	PART NO.	DESCRIPTION	F4E3	F4E4				REMARKS
1	6BH–13750–01	THROTTLE BODY ASSY	1	1				
2	6BH–13641–10	MANIFOLD, INTAKE 1	1	1				
3	6BH–14156–00	.GASKET, INSULATING	1	1				
4	6BH–14126–00	.GASKET	4	4				
5	6CS–12880–00	DELIVERY PIPE	1	1				
6	90105–08243	BOLT, FLANGE	4	4				
7	6CS–14446–00	BOLT	3	3				
8	97513–08525	BOLT, WITH WASHER	4	4				
9	6BH–82380–00	SENSOR, PRESSURE	1	1				
10	6CR–14536–00	GASKET	1	1				
11	6CR–14163–00	SPACER	1	1				
12	6S5–13761–10	INJECTOR	4	4				
13	68V–1416A–00	.O-RING	1	1				
14	8FP–13556–10	GASKET, MANIFOLD	4	4				
15	6D3–1444B–00	RIBBON	1	1				
16	65L–85886–00	THERMOSENSOR	1	1				
17	6S5–14285–00	WASHER	1	1				
18	6S5–14457–00	HOLDER	1	1				
19	6BH–14445–00	GROMMET	1	1				
20	6BH–13532–00	HOSE, VACUUM SENSING 3	1	1				
21	6S5–24300–01	FUEL PIPE JOINT	2	2				
22	6CN–14294–10	HOSE	1	1				
23	90447–19020	TUBE (L610)	1	1				
24	90450–17M17	HOSE CLAMP ASSY	4	4				
25	97013–08035	BOLT	8	8				
26	92903–08600	WASHER, PLATE	8	8				
27	90116–08032	BOLT, STUD	2	2				

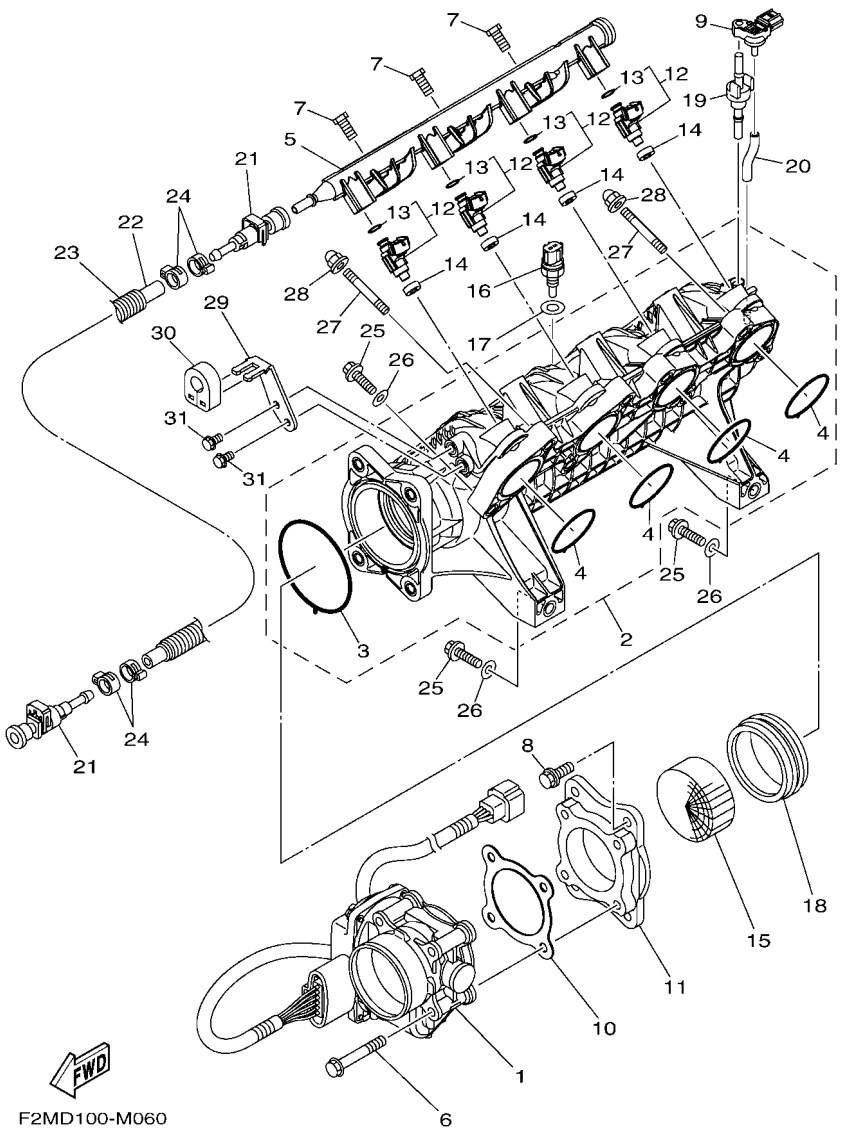

FIG. 6 INTAKE 1

REF. NO.	PART NO.	DESCRIPTION	F4E3	F4E4				REMARKS
28	90176–08080	NUT, CROWN	2	2				
29	6CR–14572–00	PLATE, STAY	1	1				
30	6CS–14445–00	GROMMET	1	1				
31	95023–06012	BOLT	2	2				

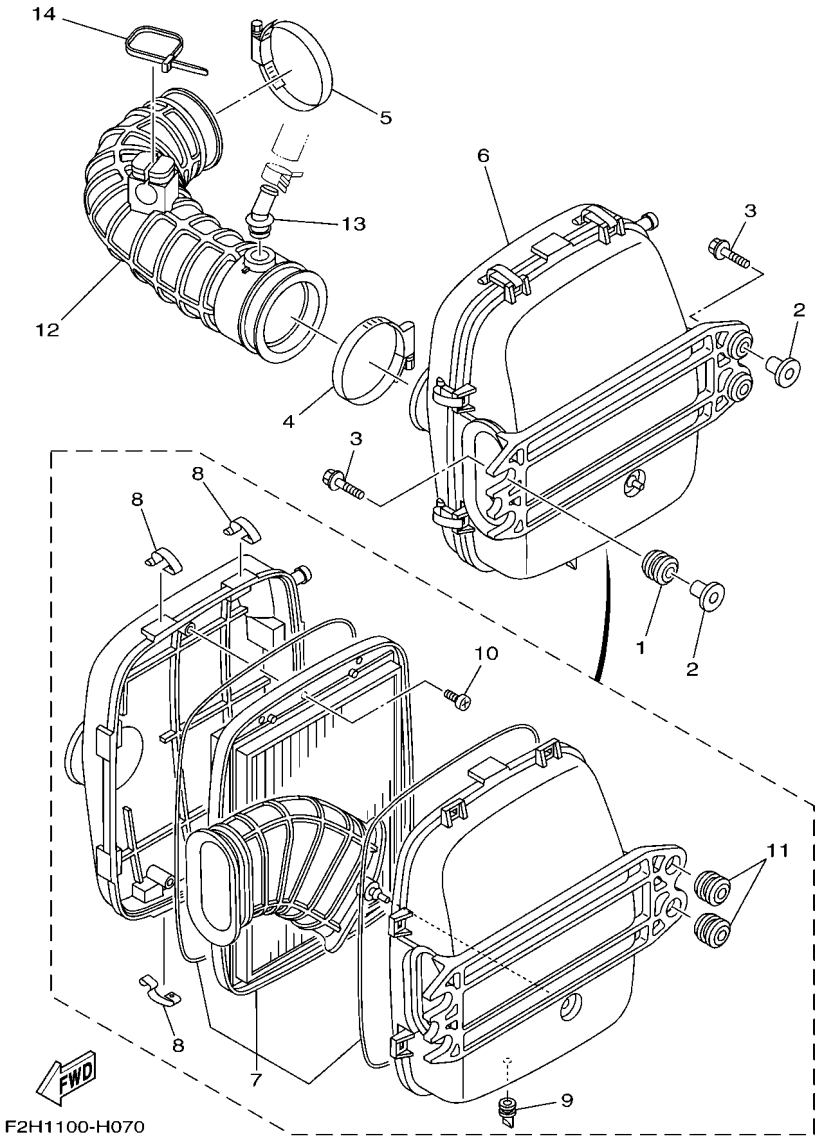

FIG. 7 INTAKE 2

REF. NO.	PART NO.	DESCRIPTION	F4E3	F4E4				REMARKS
1	90480–22M15	GROMMET	2	2				
2	90387–08M37	COLLAR	4	4				
3	90119–08M22	BOLT, WITH WASHER	4	4				
4	90450–90002	HOSE CLAMP ASSY	1	1				
5	90450–90002	HOSE CLAMP ASSY	1	1				
6	6S5–E4410–01	AIR CLEANER ASSY.	1	1				
7	6S5–E4451–00	.ELEMENT, AIR CLEANER	1	1				
8	6S5–E4436–00	.HOOK	8	8				
9	6S5–G2717–00	.RUBBER, SEAL 2	1	1				
10	97780–60516	.SCREW, TAPPING	3	3				
11	90480–22801	.GROMMET	2	2				
12	6BH–E4419–00	PIPE	1	1				
13	6BH–R1142–10	CONNECTION	1	1				
14	90464–40825	CLAMP	1	1				

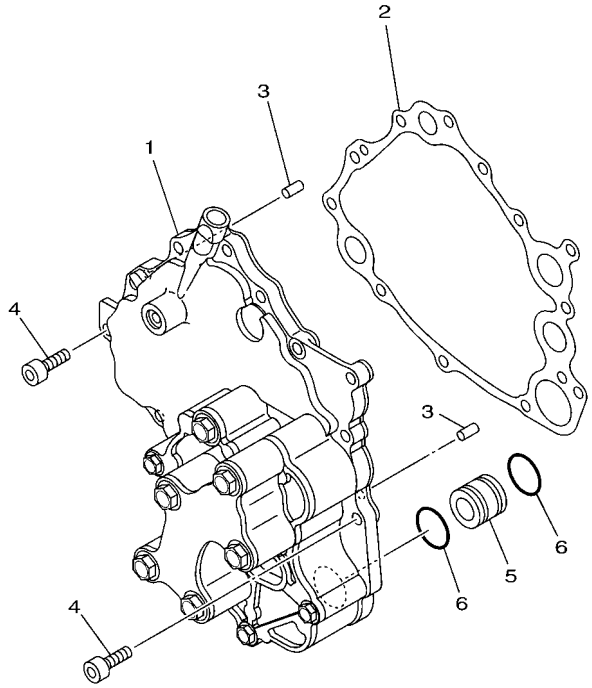

F2M7100-L080

FIG. 8 OIL PUMP

REF. NO.	PART NO.	DESCRIPTION	F4E3	F4E4				REMARKS
1	6BH–13300–12	OIL PUMP ASSY	1	1				
2	6S5–13563–00	GASKET	1	1				
3	93606–12019	PIN, DOWEL	2	2				
4	90110–06404	BOLT, HEXAGON SOCKET HEAD	12	12				
5	6S5–13446–10	CONNECTOR	1	1				
6	93210–21631	O-RING	2	2				

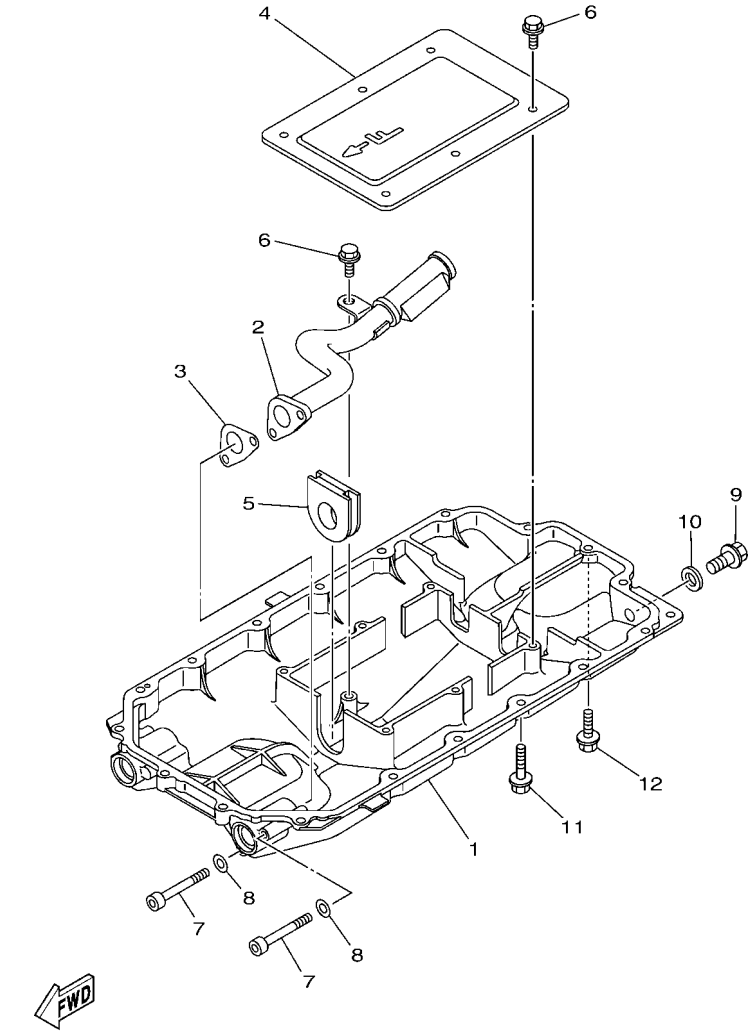

F2W1100-P090

FIG. 9 OIL PAN

REF. NO.	PART NO.	DESCRIPTION	F4E3	F4E4				REMARKS
1	6S5–1310A–25	PAN, OIL	1	1				
2	6S5–13405–11	OIL PIPE COMP. 1	1	1				
3	6S5–13477–00	GASKET	1	1				
4	6S5–13317–10	PLATE, BAFFLE	1	1				
5	6S5–15486–10	GROMMET	1	1				
6	95817–06014	BOLT, FLANGE	7	7				
7	91314–06060	BOLT, HEXAGON SOCKET HEAD	2	2				
8	90201–06028	WASHER, PLATE	2	2				
9	95814–08020	BOLT, FLANGE	1	1				
10	90430–08209	GASKET	1	1				
11	95024–06035	BOLT, FLG.(SMALL HEAD)	17	17				
12	95024–06020	BOLT, FLG.(SMALL HEAD)	1	1				

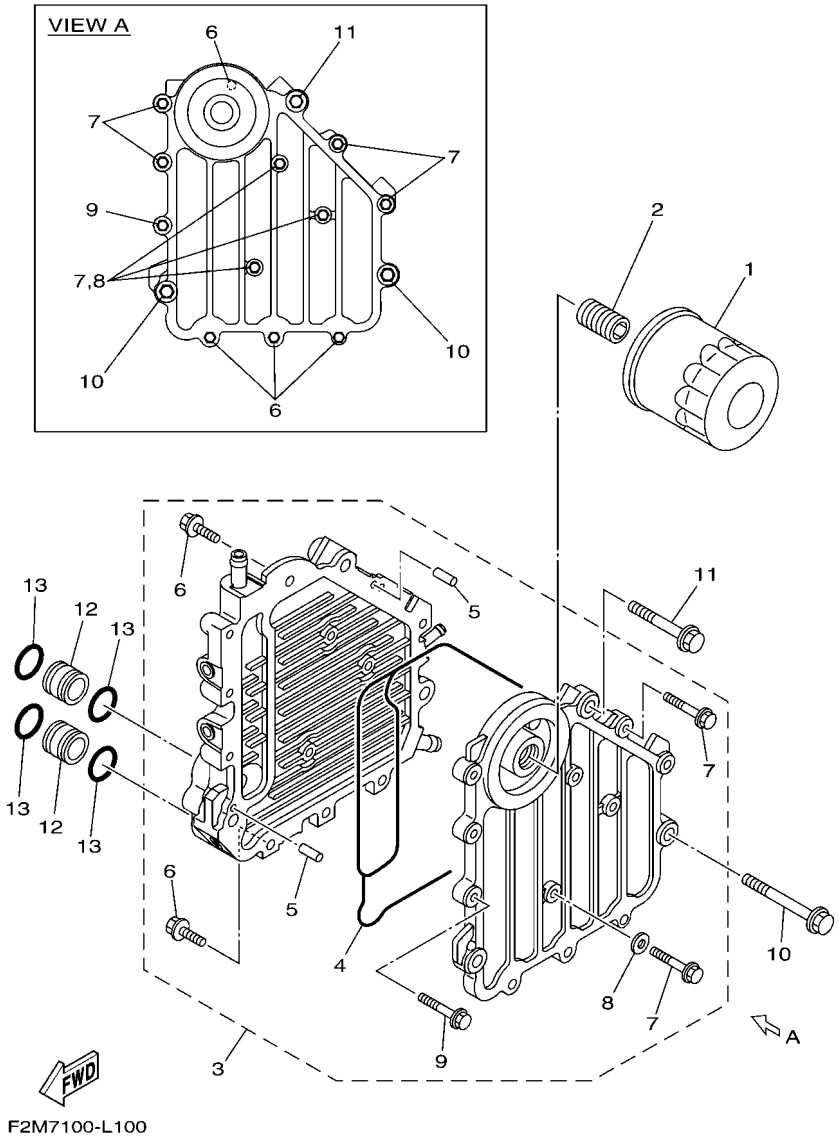

FIG. 10 OIL COOLER

REF. NO.	PART NO.	DESCRIPTION	F4E3	F4E4				REMARKS
1	69J–13440–03	ELEMENT ASSY, OIL CLEANER	1	1				
2	6S5–12858–00	BOLT, UNION	1	1				
3	6BH–13470–21	OIL COOLER ASSY	1	1				
4	6BH–13556–00	.GASKET, MANIFOLD	1	1				
5	93604–10M03	.PIN, DOWEL	2	2				
6	90105–06184	.BOLT, FLANGE	4	4				
7	90105–06185	.BOLT, FLANGE	7	7				
8	90430–06232	.GASKET	3	3				
9	90105–08054	.BOLT, FLANGE	1	1				
10	90105–08169	BOLT, FLANGE	2	2				
11	90105–08170	BOLT, FLANGE	1	1				
12	60E–13446–00	CONNECTOR	2	2				
13	93210–18322	O-RING	4	4				

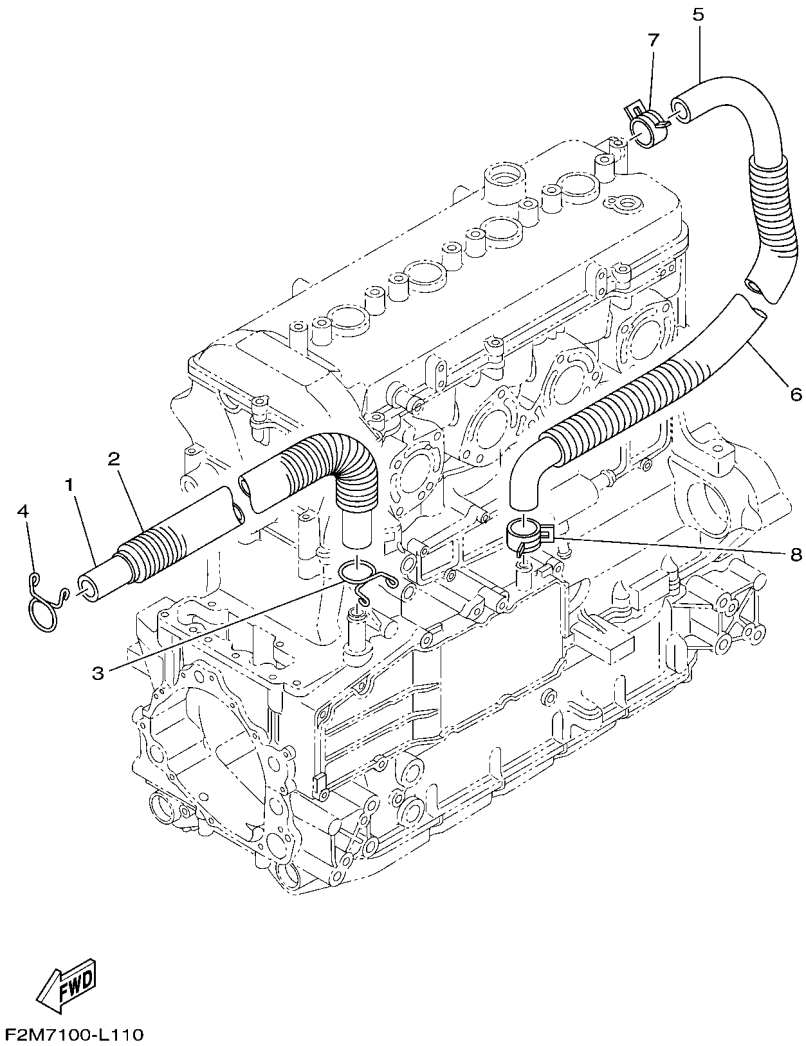

FIG. 11 BREATHER OIL

REF. NO.	PART NO.	DESCRIPTION	F4E3	F4E4				REMARKS
1	6S5–11166–10	PIPE, BREATHER 1	1	1				
2	90447–22015	TUBE (L410)	1	1				
3	90467–190A0	CLIP	1	1				
4	90467–190A0	CLIP	1	1				
5	6S5–11167–10	PIPE, BREATHER 2	1	1				
6	90447–22016	TUBE (L490)	1	1				
7	90467–240A0	CLIP	1	1				
8	90467–200A3	CLIP	1	1				

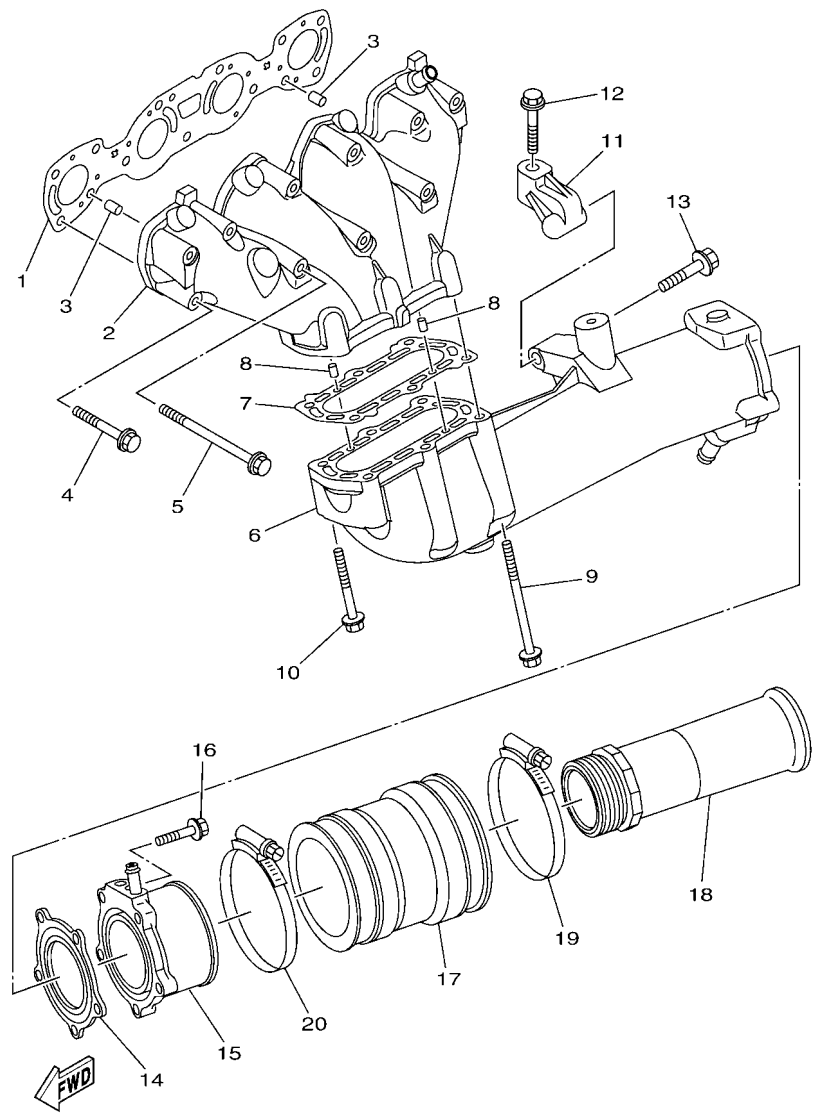

F4E3100-S120

FIG. 12 EXHAUST 1

REF. NO.	PART NO.	DESCRIPTION	F4E3	F4E4				REMARKS
1	6BH–14613–00	GASKET, EXHAUST PIPE	1	1				
2	6BH–14711–10	MUFFLER 1	1	1				
3	93608–16M16	PIN, DOWEL	2	2				
4	90119–08034	BOLT, WITH WASHER	8	8				
5	90119–08097	BOLT, WITH WASHER	3	3				
6	6BH–14721–10	MUFFLER 2	1	1				
7	6S5–14739–00	GASKET, MUFFLER DAMPER 1	1	1				
8	93606–12019	PIN, DOWEL	2	2				
9	90119–08097	BOLT, WITH WASHER	4	4				
10	90119–08034	BOLT, WITH WASHER	2	2				
11	6S5–14771–00–94	STAY, MUFFLER 1	1	1				
12	90119–08096	BOLT, WITH WASHER	1	1				
13	90119–10029	BOLT, WITH WASHER	1	1				
14	6BH–14749–00	GASKET, MUFFLER DAMPER 2	1	1				
15	6BH–14784–01–94	PIPE, TAIL	1	1				
16	95024–08035	BOLT, FLG.(SMALL HEAD)	5	5				
17	6S5–E4752–00	PIPE, OUTLET	1	1				
18	6CS–1475A–00	PIPE 1	1	1				
19	90450–99016	HOSE CLAMP ASSY	1	1				
20	90450–99015	HOSE CLAMP ASSY	1	1				

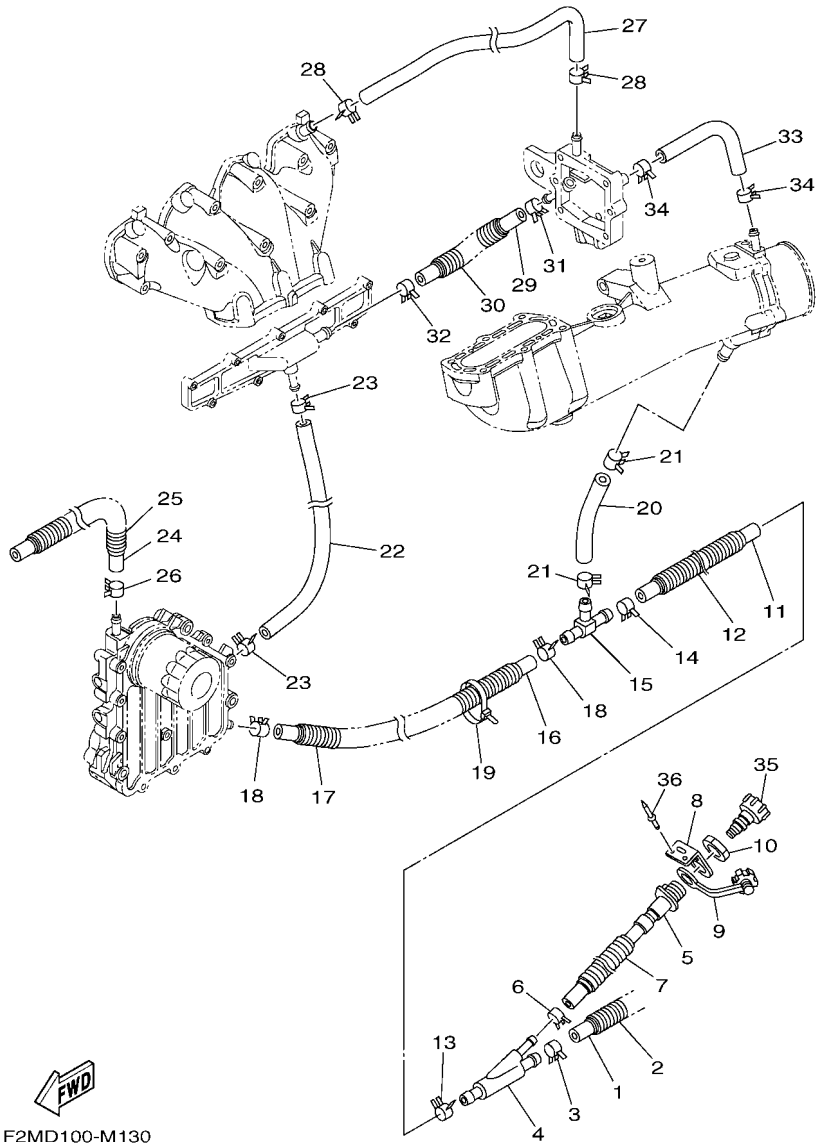

FIG. 13 EXHAUST 2

REF. NO.	PART NO.	DESCRIPTION	F4E3	F4E4				REMARKS
1	90445–21806	HOSE (L250)	1	1				
2	90447–22801	TUBE (L200)	1	1				
3	90467–200A3	CLIP	1	1				
4	60E–12581–00	JOINT, HOSE 1	1	1				
5	63M–12580–00	JOINT ASSY	1	1				
6	90467–150A5	CLIP	1	1				
7	90447–19801	TUBE (L485)	1	1				
8	60E–12443–00	STAY	1	1				
9	682–84385–01	CAP,1	1	1				
10	EU0–61652–00	NUT	1	1				
11	6S5–1243E–01	HOSE 2	1	1				
12	90447–22011	TUBE (L170)	1	1				
13	90467–200A3	CLIP	1	1				
14	90467–200A3	CLIP	1	1				
15	6BH–12584–00	JOINT, HOSE 3	1	1				
16	90445–18012	HOSE (L400)	1	1				
17	90447–19005	TUBE (L260)	1	1				
18	90467–160A0	CLIP	2	2				
19	90464–35132	CLAMP	1	1				
20	6S5–12589–01	HOSE 6	1	1				
21	90467–200A3	CLIP	2	2				
22	6BH–1244H–00	HOSE 5	1	1				
23	90467–150A1	CLIP	2	2				
24	6CN–12588–00	HOSE 5	1	1				
25	90447–19021	TUBE (L860)	1	1				
26	90467–160A0	CLIP	1	1				
27	6BH–12577–00	HOSE 2	1	1				

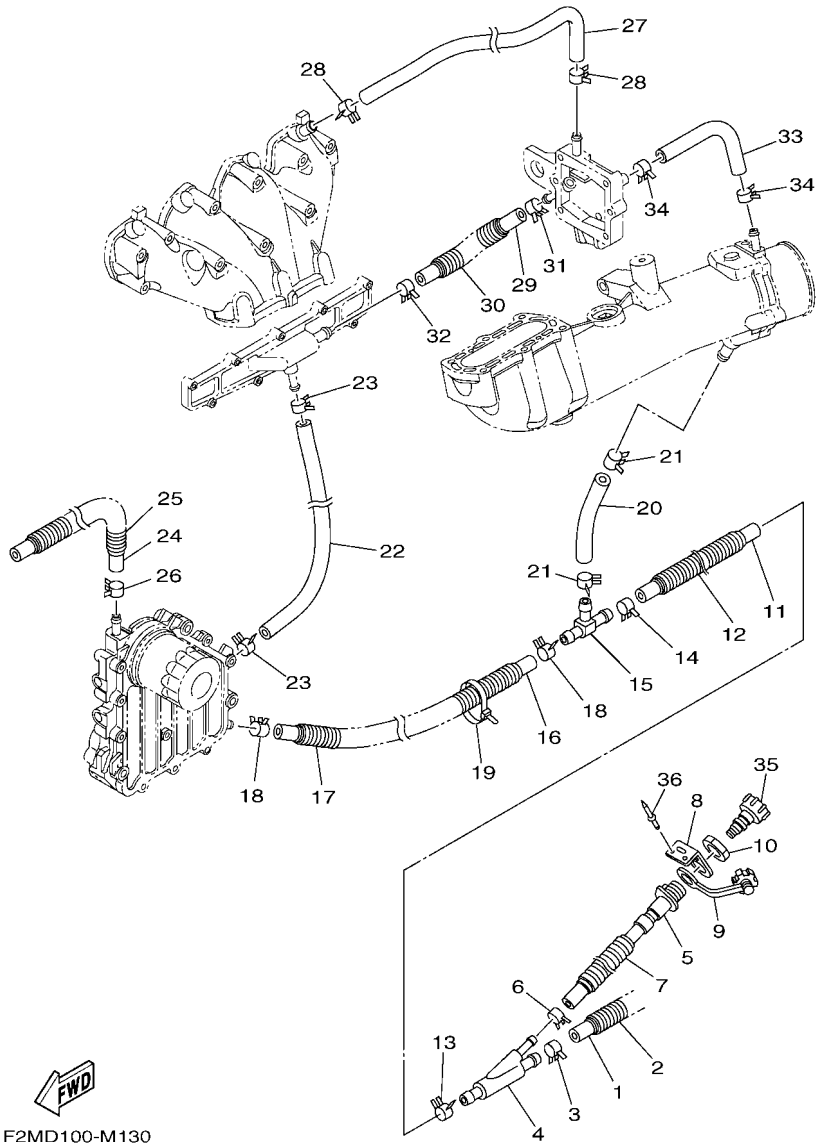

FIG. 13 EXHAUST 2

REF. NO.	PART NO.	DESCRIPTION	F4E3	F4E4				REMARKS
28	90467–160A0	CLIP	2	2				
29	6S5–12579–00	HOSE 4	1	1				
30	90447–19011	TUBE (L150)	1	1				
31	90467–160A0	CLIP	1	1				
32	90467–170A5	CLIP	1	1				
33	90445–16013	HOSE (L220)	1	1				
34	90467–160A0	CLIP	2	2				
35	67X–E2590–10	CONDUCTION ASSY	1					
	67X–E2590–10	CONDUCTION ASSY		1				
36	90267–489U1	RIVET,BLIND	2	2				

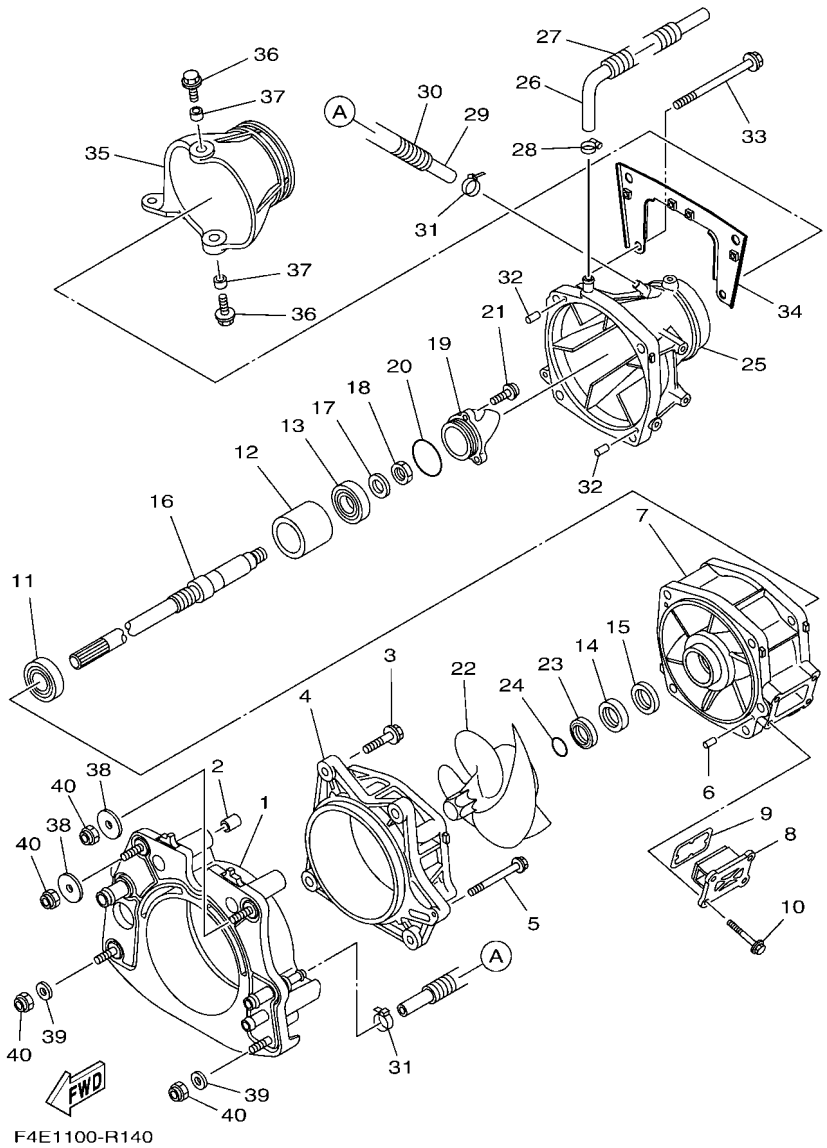

FIG. 14 JET UNIT 1

REF. NO.	PART NO.	DESCRIPTION	F4E3	F4E4				REMARKS
1	6CS–G5831–10	PLATE, TRANSOM	1	1				
2	99590–14016	PIN, DOWEL	2	2				
3	90119–10810	BOLT, WITH WASHER	4	4				
4	66V–51312–01	HOUSING, IMPELLER	1	1				
5	90119–06893	BOLT, WITH WASHER	1	1				
6	93606–12019	PIN, DOWEL	2	2				
7	6S5–51315–02	DUCT, IMPELLER	1	1				
8	6EX–G6882–00	FILTER	1	1				
9	66V–42414–00	O-RING	1	1				
10	90119–06889	BOLT, WITH WASHER	4	4				
11	93306–20654	BEARING	1	1				
12	6CS–G5538–00	SPACER 1	1	1				
13	93306–30537	BEARING	1	1				
14	93102–31009	OIL SEAL	1	1				
15	93101–31001	OIL SEAL	1	1				
16	6S5–45511–00	SHAFT, DRIVE	1	1				
17	9290P–20600	WASHER	1	1				
18	90170–20802	NUT	1	1				
19	6AN–R1326–00	CAP	1	1				
20	93210–54010	O-RING	1	1				
21	90110–06822	BOLT, HEXAGON SOCKET HEAD	3	3				
22	6AP–R1321–20	IMPELLER	1	1				
23	6BH–51348–01	SPACER	1	1				
24	93210–30611	O-RING	1	1				
25	6EX–R1318–01	NOZZLE	1	1				
26	6CN–U72M2–00	HOSE 1	1	1				
27	6ET–U773D–00	TUBE	1	1				

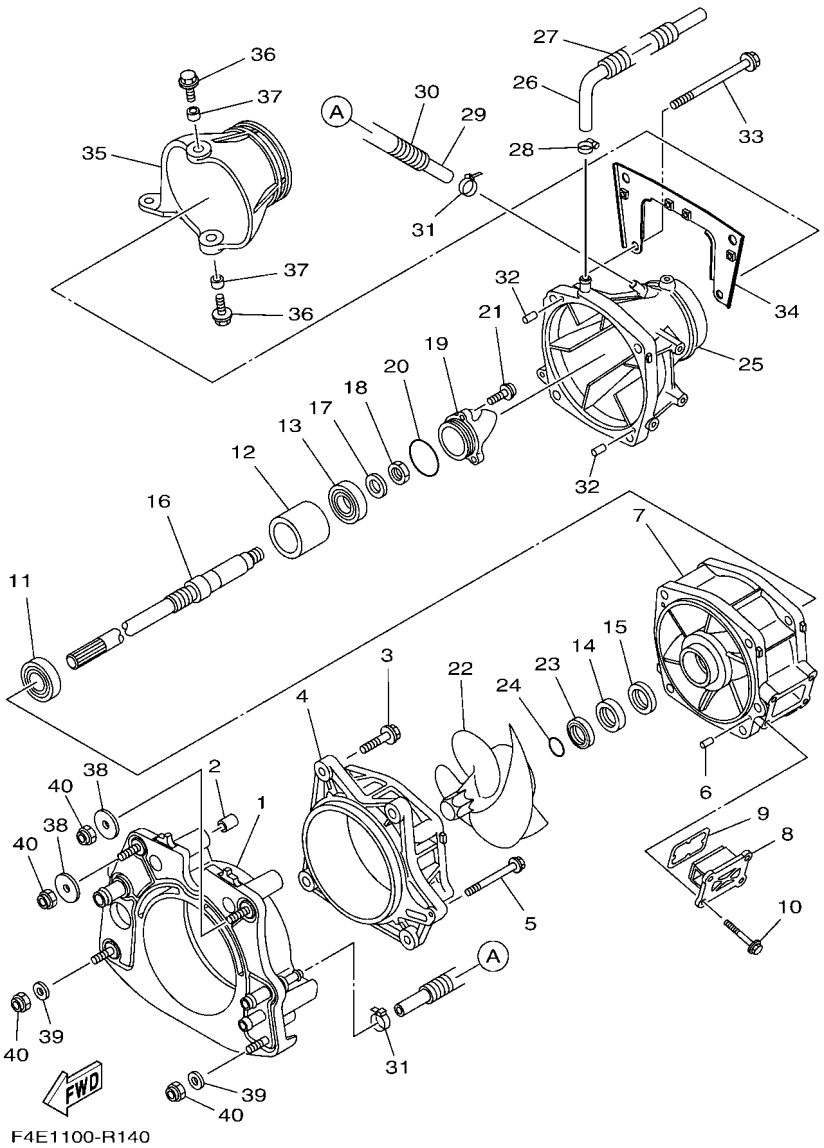

FIG. 14 JET UNIT 1

REF. NO.	PART NO.	DESCRIPTION	F4E3	F4E4				REMARKS
28	90601–118UF	BAND, HOSE 18	1	1				
29	90445–14807	HOSE (L355)	1	1				
30	90446–20MF5	HOSE (L320)	1	1				
31	90465–11829	CLAMP	1	1				
32	93606–12019	PIN, DOWEL	2	2				
33	90119–10806	BOLT, WITH WASHER	4	4				
34	6EX–R1341–00	BRACKET 1	1	1				
35	6EX–R1313–00	NOZZLE, DEFLECTOR	1	1				
36	90119–08840	BOLT, WITH WASHER	2	2				
37	90387–08M06	COLLAR	2	2				
38	F1S–U725E–01	WASHER	2	2				
39	90201–10801	WASHER, PLATE	2	2				
40	9572R–10300	NUT, NYLON	4	4				

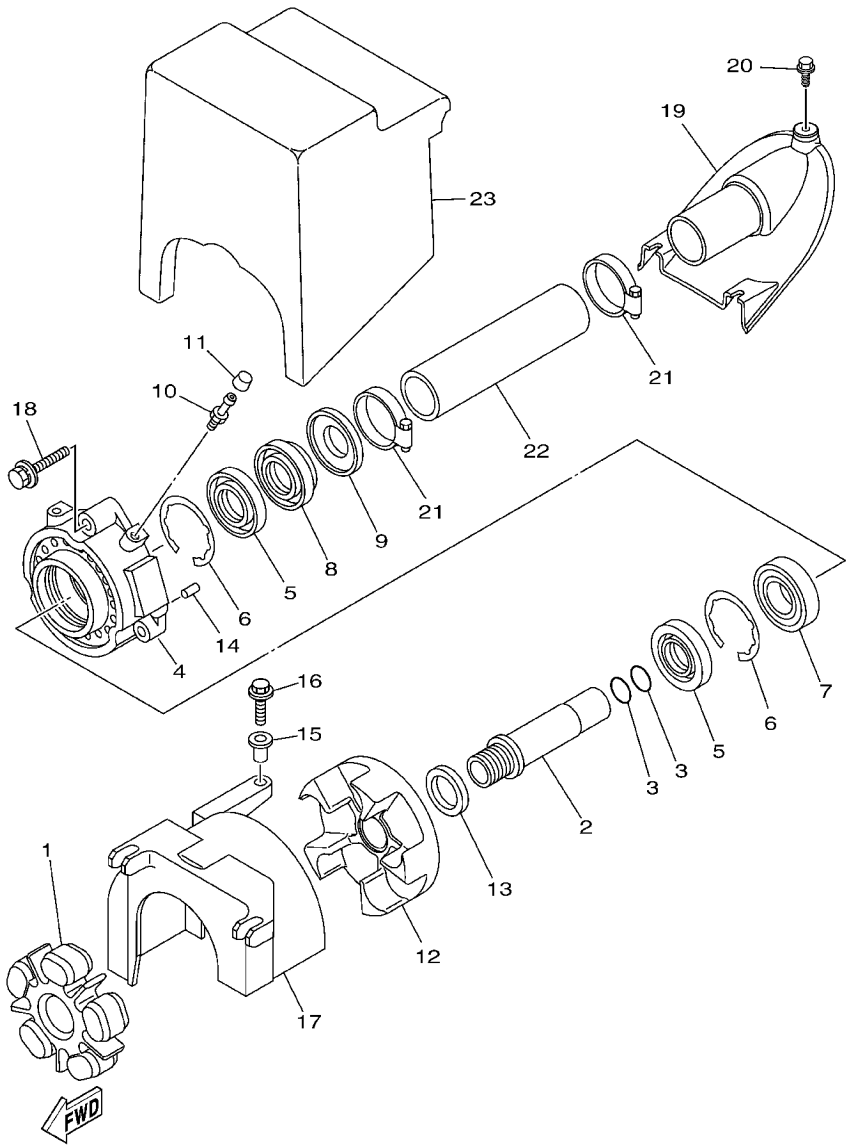

F2W1100P1501

FIG. 15 JET UNIT 2

REF. NO.	PART NO.	DESCRIPTION	F4E3	F4E4				REMARKS
1	6BH–4581J–00	RUBBER SHAFT COUPLING	1	1				
2	6S5–51323–00	SHAFT, COUPLER	1	1				
3	93210–22MF1	O-RING	2	2				
4	6S5–45332–00	HOUSING, BEARING	1	1				
5	93102–29008	OIL SEAL	2	2				
6	93450–66156	CIRCLIP	2	2				
7	93306–20655	BEARING	1	1				
8	93102–29009	OIL SEAL	1	1				
9	6ET–45613–00	WASHER, THRUST	1	1				
10	93700–06M03	NIPPLE, GREASE	1	1				
11	663–45119–00	CAP, GREASE NIPPLE	1	1				
12	6S5–45593–00	FLANGE, COUPLING 1	1	1				
13	6ET–E2289–00	WASHER	1	1				
14	93606–12019	PIN, DOWEL	2	2				
15	90387–06289	COLLAR	1	1				
16	90119–06891	BOLT, WITH WASHER	1	1				
17	6S5–R1381–01	COVER	1	1				
18	90119–089UU	BOLT, WITH WASHER	3	3				
19	F2N–U883E–00	JOINT, PIPE	1	1				
20	90109–06832	BOLT	3	3				
21	90601–155U4	BAND, HOSE 55	2	2				
22	F2M–U883B–00	PIPE 1	1	1				
23	F1K–U892D–00	PAD	1	1				

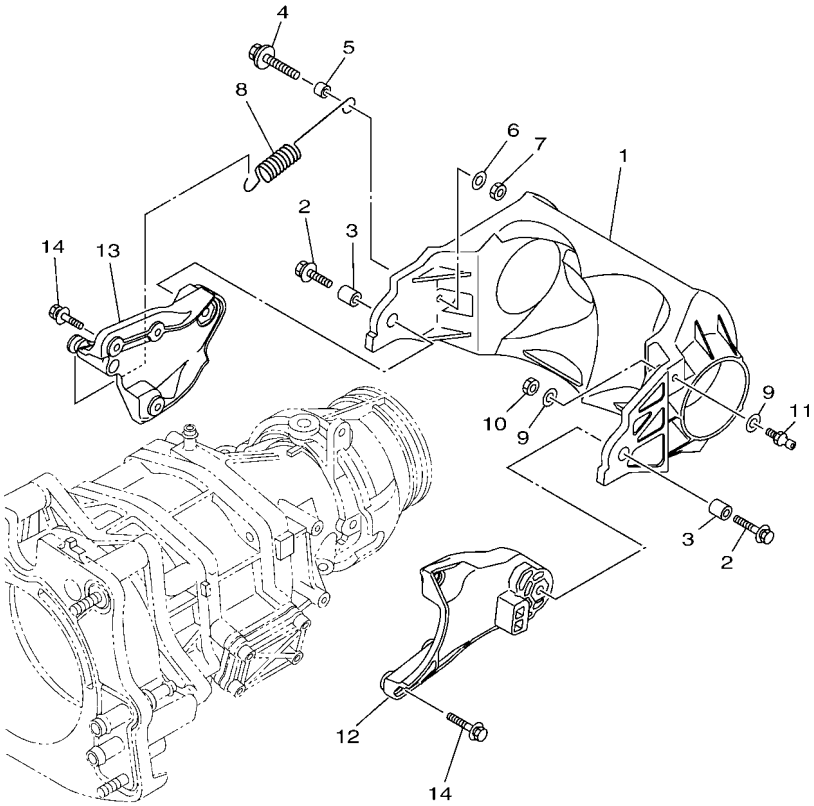

F2W1100-P160

FIG. 16 JET UNIT 3

REF. NO.	PART NO.	DESCRIPTION	F4E3	F4E4				REMARKS
1	6ET–R1314–01	GATE, REVERSE	1	1				
2	90119–08840	BOLT, WITH WASHER	2	2				
3	90387–08M30	COLLAR	2	2				
4	90119–069UX	BOLT, WITH WASHER	1	1				
5	90387–06M30	COLLAR	1	1				
6	90201–06801	WASHER, PLATE	1	1				
7	9538R–06600	NUT	1	1				
8	6S5–52358–00	SPRING, RETAINER	1	1				
9	90201–06801	WASHER, PLATE	2	2				
10	9538R–06600	NUT	1	1				
11	EU0–U1461–03	STUD, JOINT BALL	1	1				
12	6ET–R1341–00	BRACKET 1	1	1				
13	6ET–R1342–00	BRACKET 2	1	1				
14	90119–06891	BOLT, WITH WASHER	6	6				

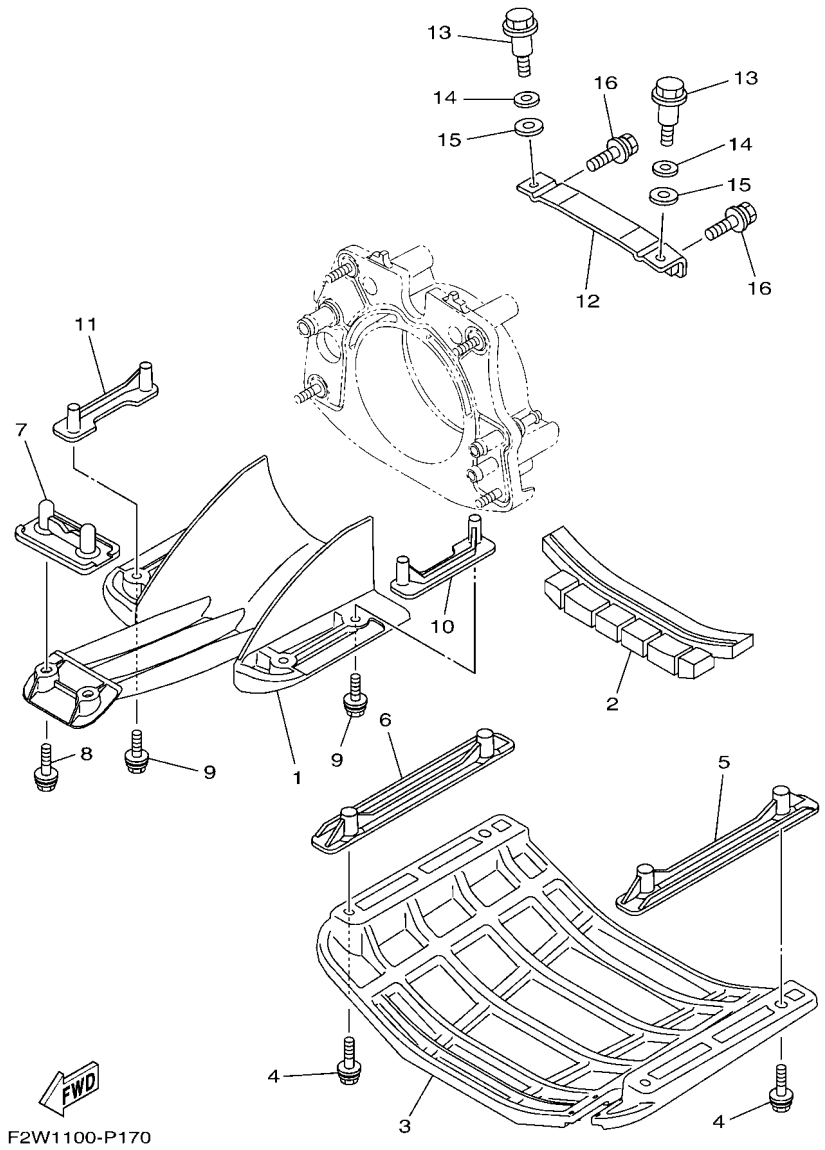

FIG. 17 JET UNIT 4

REF. NO.	PART NO.	DESCRIPTION	F4E3	F4E4				REMARKS
1	6EX–R1333–00	SCREEN, INTAKE	1	1				
2	F2X–U72C0–00	SPACER	1	1				
3	F2W–U273B–00	PLATE 2	1	1				
4	90119–08823	BOLT, WITH WASHER	4	4				
5	F2X–U8572–00	BRACKET 2	1	1				
6	F2X–U8572–00	BRACKET 2	1	1				
7	F2S–U8577–00	BRACKET, 3	1	1				
8	90119–08823	BOLT, WITH WASHER	2	2				
9	90119–08823	BOLT, WITH WASHER	4	4				
10	F2X–U8571–00	BRACKET 1	1	1				
11	F2X–U8571–00	BRACKET 1	1	1				
12	F2C–U7557–01	BRACKET	1	1				
13	90109–08041	BOLT	2	2				
14	92990–12200	WASHER, PLAIN	2	2				
15	90430–12002	GASKET	2	2				
16	90119–089U7	BOLT, WITH WASHER	2	2				

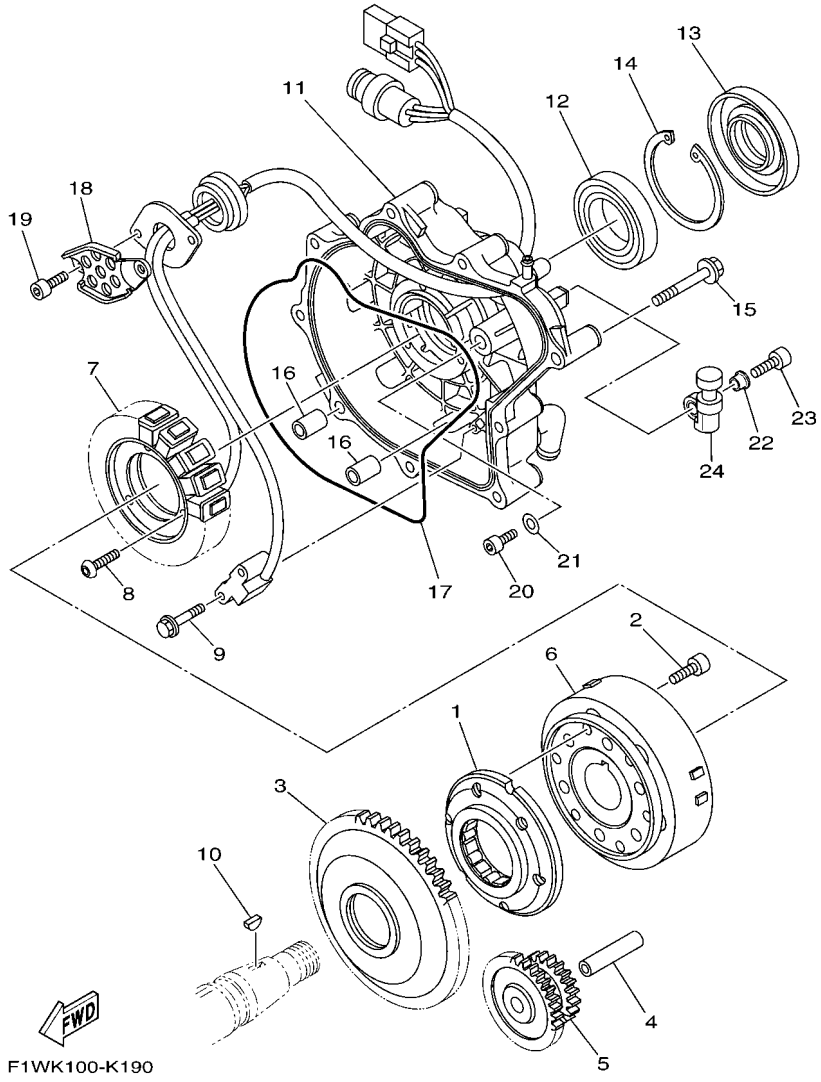

FIG. 18 GENERATOR

REF. NO.	PART NO.	DESCRIPTION	F4E3	F4E4				REMARKS
1	6S5–15590–00	STARTER ONE-WAY ASSY	1	1				
2	90110–08212	BOLT, HEXAGON SOCKET HEAD	6	6				
3	6S5–15515–00	GEAR 3	1	1				
4	6S5–15521–00	SHAFT 1	1	1				
5	6S5–15517–00	GEAR, IDLER 2	1	1				
6	6S5–81450–01	ROTOR ASSY	1	1				
7	6S5–81410–11	STATOR ASSY	1	1				
8	90149–06229	SCREW	3	3				
9	97513–05514	BOLT, WITH WASHER	2	2				
10	90280–03047	KEY, WOODRUFF	1	1				
11	6S5–81337–20	COVER, FLYWHEEL	1	1				
12	93306–00809	BEARING	1	1				
13	6S5–81167–10	OIL SEAL	1	1				
14	99009–72500	CIRCLIP	1	1				
15	90105–08249	BOLT, FLANGE	9	9				
16	99530–10114	PIN, DOWEL	2	2				
17	6S5–81168–00	O-RING	1	1				
18	6S5–81328–00	CLAMP	1	1				
19	91317–06014	BOLT,HEX.SOCKET HEAD	2	2				
20	91317–05010	BOLT,HEX.SOCKET HEAD	1	1				
21	90201–052E8	WASHER, PLATE	1	1				
22	90387–06M05	COLLAR	2	2				
23	91380–06020	BOLT	2	2				
24	6S5–81364–10	GROMMET	2	2				

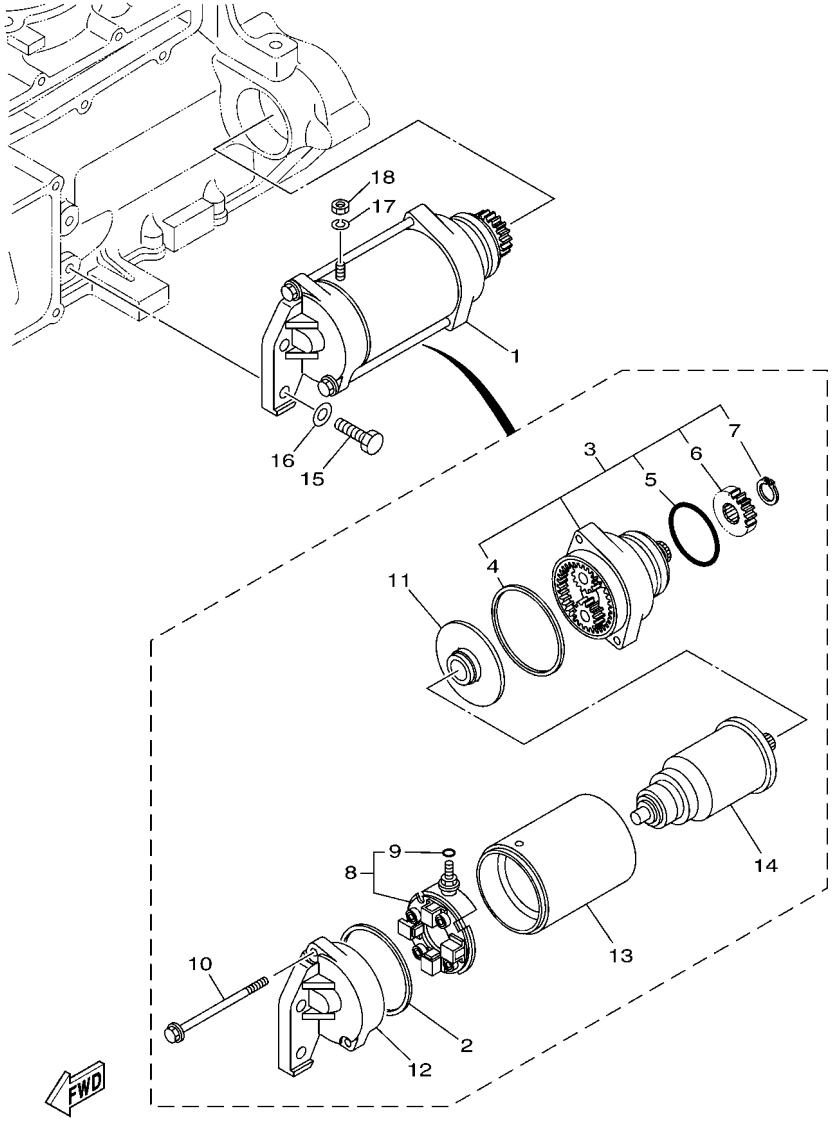

F1W1100-G200

FIG. 19 STARTING MOTOR

REF. NO.	PART NO.	DESCRIPTION	F4E3	F4E4				REMARKS
1	6S5–81800–00	STARTING MOTOR ASSY	1	1				
2	11H–81844–00	.GASKET	1	1				
3	6S5–81830–00	.FRONT BRACKET ASSY	1	1				
4	4G0–81844–00	..GASKET	1	1				
5	1J7–81847–60	..O-RING	1	1				
6	5EL–15511–00	..GEAR, STARTING MOTOR	1	1				
7	93410–12003	..CIRCLIP	1	1				
8	6S5–81840–00	.BRUSH HOLDER ASSY	1	1				
9	3TB–81847–00	..O-RING	1	1				
10	6S5–81826–00	.BOLT	2	2				
11	5EL–81845–00	.PLATE	1	1				
12	6S5–81820–00	.REAR BRACKET ASSY	1	1				
13	6S5–81810–00	.STATOR ASSY	1	1				
14	5A8–81850–10	.ARMATURE ASSY	1	1				
15	97013–08030	BOLT	2	2				
16	92903–08600	WASHER, PLATE	2	2				
17	92990–06100	WASHER, SPRING	1	1				
18	95380–06700	NUT	1	1				

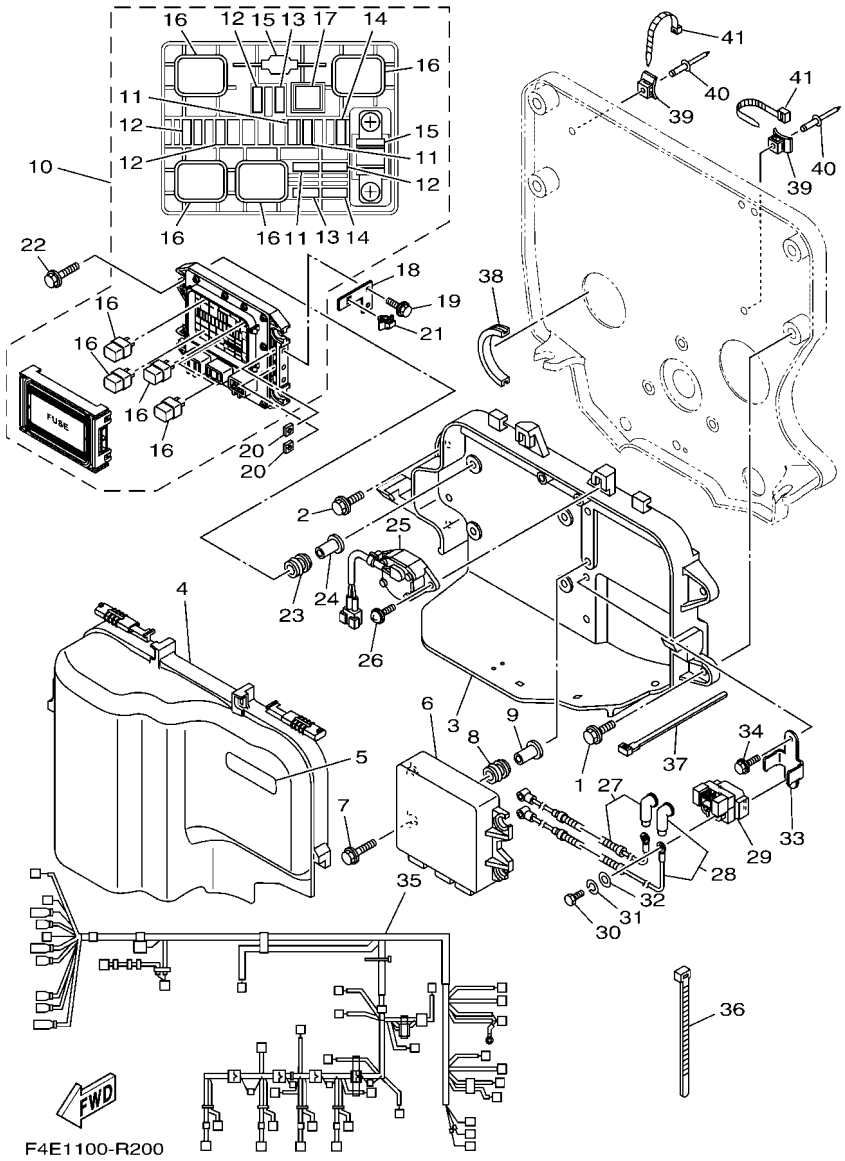

FIG. 20 ELECTRICAL 1

REF. NO.	PART NO.	DESCRIPTION	F4E3	F4E4				REMARKS
1	90119–089UT	BOLT, WITH WASHER	2	2				
2	90119–089UT	BOLT, WITH WASHER	2	2				
3	6CS–81845–00	PLATE	1	1				
4	6S5–81942–11	COVER	1	1				
5	60E–83627–00	LABEL, CAUTION 7	1	1				
6	6CR–8591A–24	ENGINE CONTROL UNIT ASSY	1	1				
7	90119–06M35	BOLT, WITH WASHER	4	4				
8	6A0–82317–00	DAMPER, IGNITION COIL	4	4				
9	90387–06119	COLLAR	4	4				
10	6EX–82170–01	FUSE BOX ASSY	1	1				
11	67F–82151–30	.FUSE (3A)	3	3				
12	67F–82151–40	.FUSE (10A)	4	4				
13	67F–82151–00	.FUSE (20A)	2	2				
14	67F–82151–10	.FUSE (30A)	2	2				
15	6EX–82151–00	.FUSE (50A)	2	2				
16	6EX–8195A–00	.RELAY ASSY	4	4				
17	6EX–2812A–00	.PULLER, FUSE	1	1				
18	6CS–82588–00	PLATE	1	1				
19	97595–06514	BOLT, WITH WASHER	2	2				
20	90173–06015	NUT, SQUARE	2	2				
21	90464–09M47	CLAMP	1	1				
22	90119–06M35	BOLT, WITH WASHER	4	4				
23	6A0–82317–00	DAMPER, IGNITION COIL	4	4				
24	90387–06119	COLLAR	4	4				
25	6S5–8259E–00	SWITCH ASSY	1	1				
26	97780–60520	SCREW, TAPPING	2	2				
27	6CS–82115–00	WIRE, PLUS LEAD	1	1				

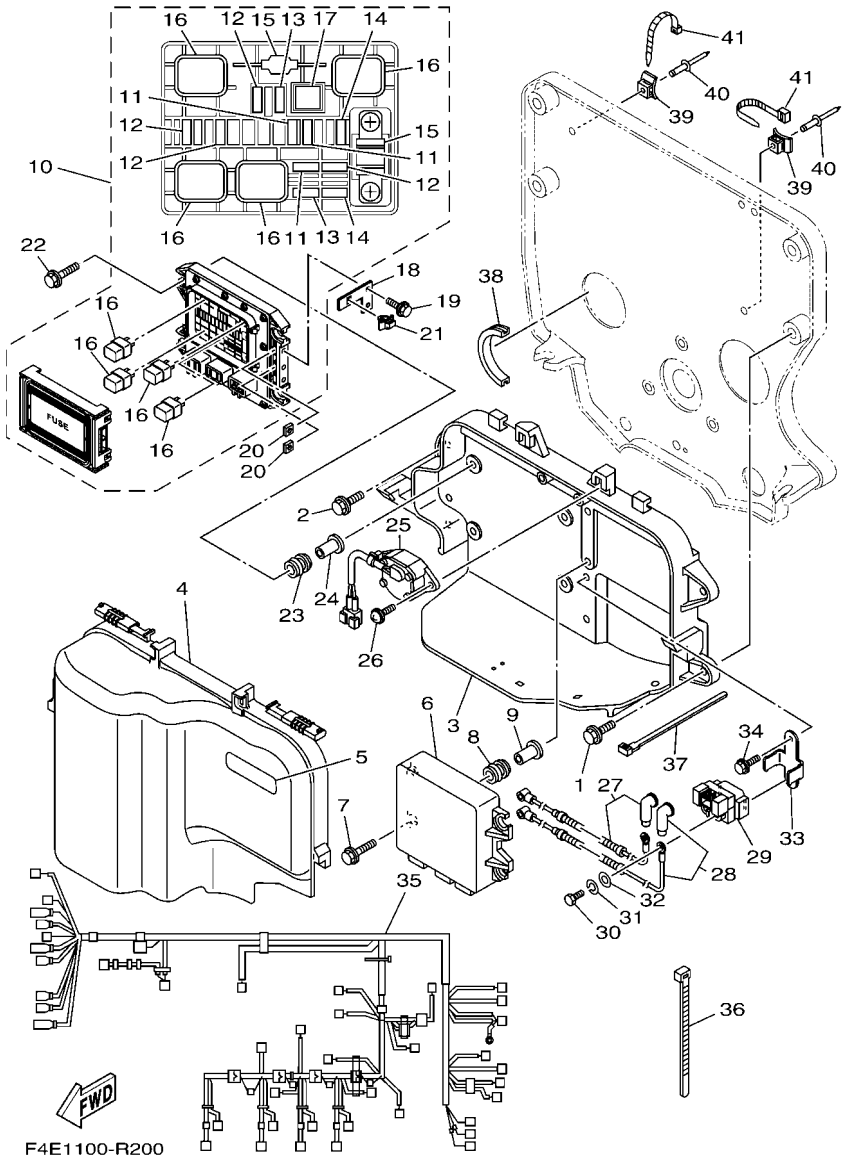

FIG. 20 ELECTRICAL 1

REF. NO.	PART NO.	DESCRIPTION	F4E3	F4E4				REMARKS
28	6CS–82117–00	WIRE, LEAD	1	1				
29	1B7–81940–00	STARTER RELAY ASSY (2768102-A)	1	1				
30	97095–06012	BOLT	2	2				
31	92995–06100	WASHER, SPRING	2	2				
32	92995–06600	WASHER	2	2				
33	6CS–81953–00	STAY, RELAY	1	1				
34	95814–06012	BOLT, FLANGE	2	2				
35	6FG–8259L–00	WIRE HARNESS ASSY 1	1	1				
36	90465–14M66	CLAMP	2	2				
37	90601–200U2	BAND	1	1				
38	F1S–U828H–01	TRIM, 1	1	1				
39	F1W–U828M–00	BASE, CLAMP	2	2				
40	90267–48802	RIVET, BLIND	2	2				
41	90464–32801	CLAMP	2	2				

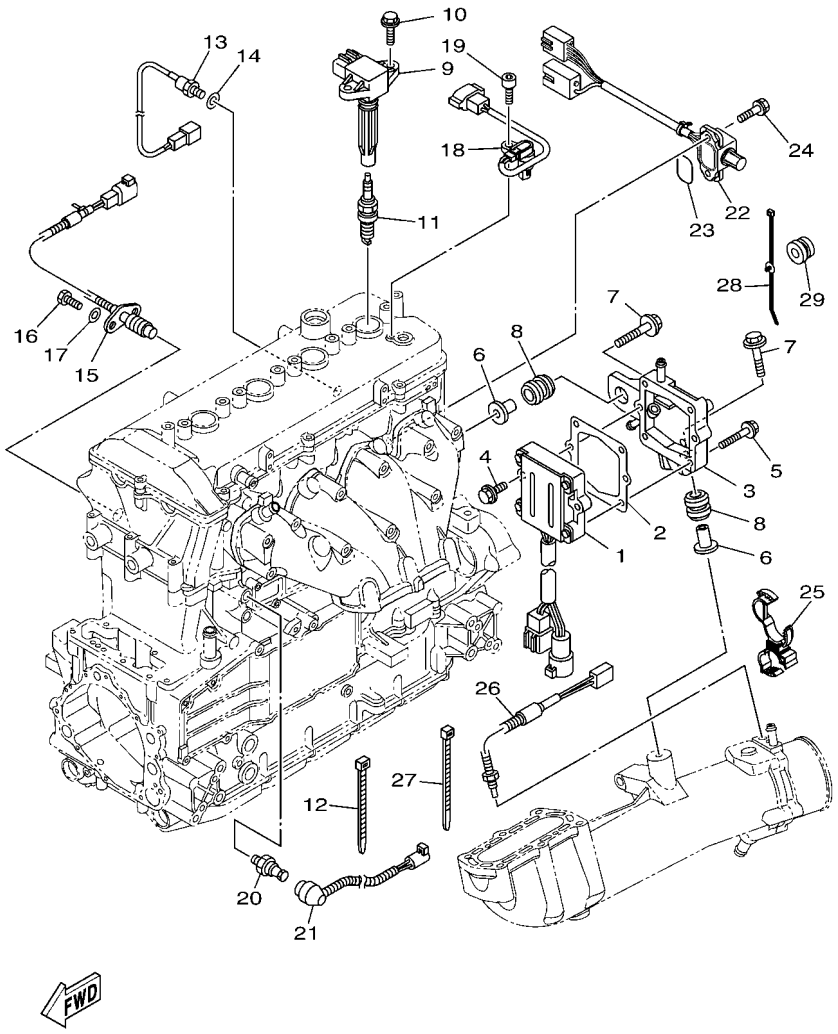

F4E3100-S210

FIG. 21 ELECTRICAL 2

REF. NO.	PART NO.	DESCRIPTION	F4E3	F4E4				REMARKS
1	6S5–81960–11	RECTIFIER & REGULATOR ASSY	1	1				
2	6S5–81975–00	PLATE, RECTIFIER FITTING	1	1				
3	6S5–81972–01–94	COVER, RECTIFIER	1	1				
4	90119–06MA3	BOLT, WITH WASHER	2	2				
5	90119–06048	BOLT, WITH WASHER	4	4				
6	90387–08M37	COLLAR	2	2				
7	90119–08M22	BOLT, WITH WASHER	2	2				
8	90480–22M15	GROMMET	2	2				
9	6S5–82310–00	IGNITION COIL ASSY	4	4				
10	90105–06903	BOLT, FLANGE	8	8				
11	94702–00427	PLUG, SPARK (NGK LFR6A)	4	4				
12	90465–13M18	CLAMP	8	8				
13	61A–85790–00	THERMOSENSOR ASSY	1	1				
14	92990–10600	WASHER, PLATE	1	1				
15	6CR–82560–00	THERMO SWITCH ASSY	1	1				
16	97095–06016	BOLT	2	2				
17	92995–06600	WASHER	2	2				
18	60E–85896–01	SENSOR, CAM POSITION	1	1				
19	91380–06016	BOLT	1	1				
20	68V–82504–00	OIL PRESSURE SWITCH ASSY	1	1				
21	6S5–81315–00	LEAD WIRE ASSY	1	1				
22	6CS–8273J–10	EARTH PLATE COMP.	1	1				
23	93210–32172	O-RING	1	1				
24	90119–06MA3	BOLT, WITH WASHER	2	2				
25	90464–20008	CLAMP	1	1				
26	6AA–85790–00	THERMOSENSOR ASSY	1	1				
27	90464–31001	CLAMP	1	1				

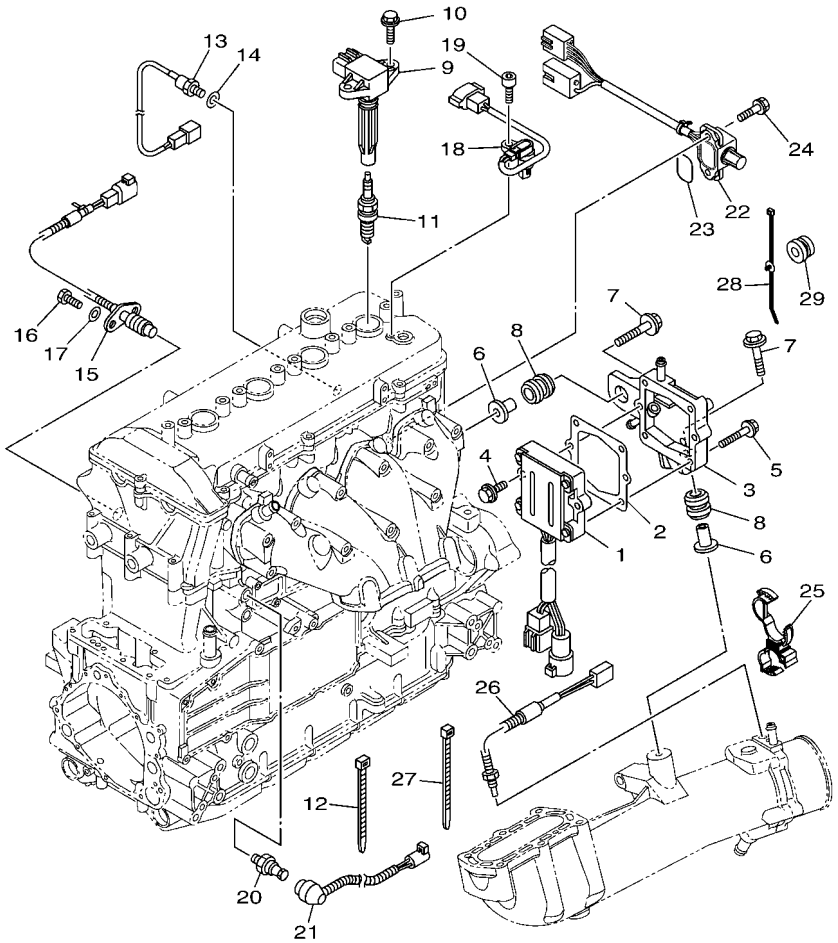

F4E3100-S210

FIG. 21 ELECTRICAL 2

REF. NO.	PART NO.	DESCRIPTION	F4E3	F4E4				REMARKS
28	90464–31002	CLAMP	1	1				
29	90480–20132	GROMMET	1	1				

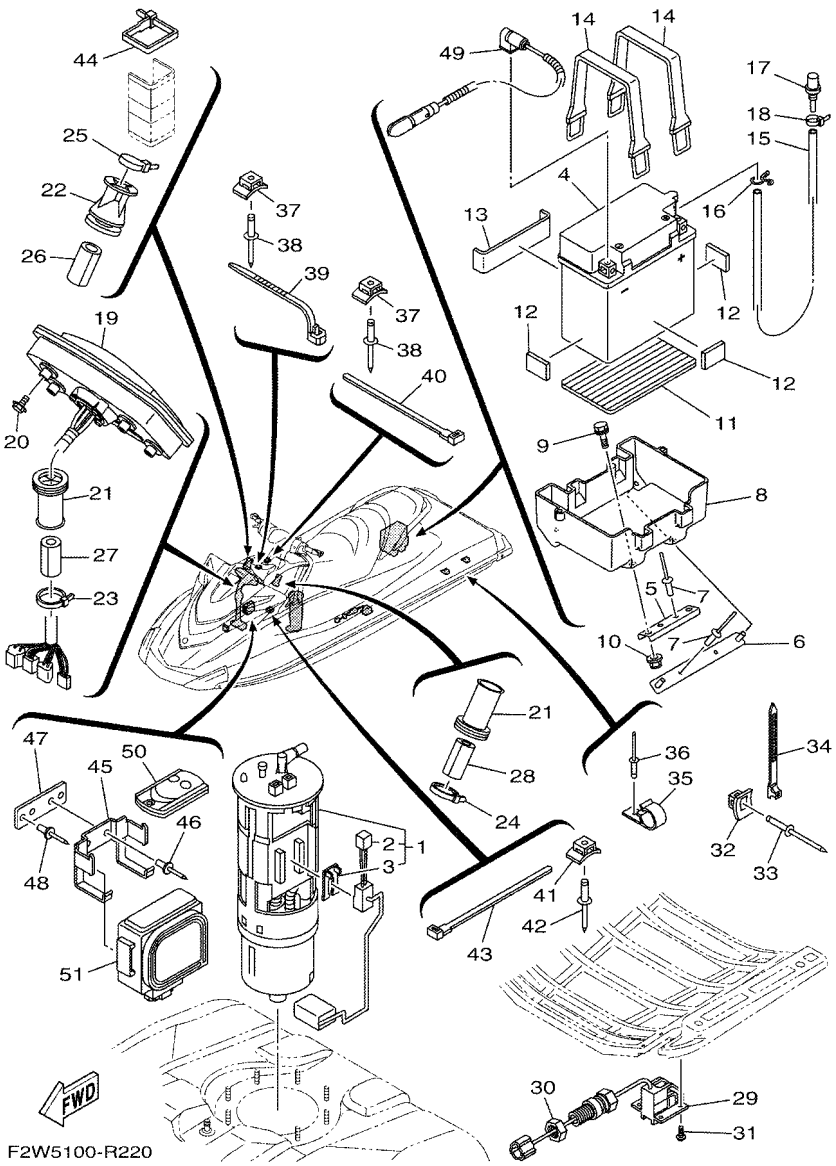

FIG. 22 ELECTRICAL 3

REF. NO.	PART NO.	DESCRIPTION	F4E3	F4E4				REMARKS
1	6S5–13907–02	FUEL PUMP COMP.	1	1				
2	6S5–682E0–00	.FUEL SENDER ASSY	1	1				
3	60E–82556–00	.DAMPER, STOPPER	1	1				
4	EU0–82110–09	BATTERY ASSY (YB16CL-B)	1	1				YUASA
5	F2S–U8592–00	PLATE, BASE 2	1	1				
6	F2S–U8593–00	PLATE, BASE 3	1	1				
7	90267–489U1	RIVET,BLIND	4	4				
8	F2S–U8211–00	CASE, BATTERY	1	1				
9	90119–06832	BOLT, WITH WASHER	2	2				
10	F2N–U142L–00	NUT, LOCK	2	2				
11	F1S–U8221–00	PAD, BATTERY	1	1				
12	EU0–U8221–30	PAD, BATTERY 2	3	3				
13	F1K–U8221–00	PAD, BATTERY	1	1				
14	EU0–U821D–00	BAND,BATTERY 1	2	2				
15	F0D–U785G–10	HOSE, AIR VENT	1	1				
16	90467–089U1	CLIP	1	1				
17	GJ3–6215F–00	NIPPLE	1	1				
18	90465–11829	CLAMP	1	1				
19	F4E–6820A–01	METER ASSY	1	1				
20	90119–05803	BOLT, WITH WASHER	4	4				
21	GU2–6822E–01	GROMMET	2	2				
22	F3J–U822E–00	GROMMET	1	1				
23	90464–32801	CLAMP	1	1				
24	90464–32801	CLAMP	1	1				
25	90464–32801	CLAMP	1	1				
26	GJ1–U7578–21	PACKING, HOSE 2	1	1				
27	GJ1–U7578–11	PACKING, HOSE 2	1	1				

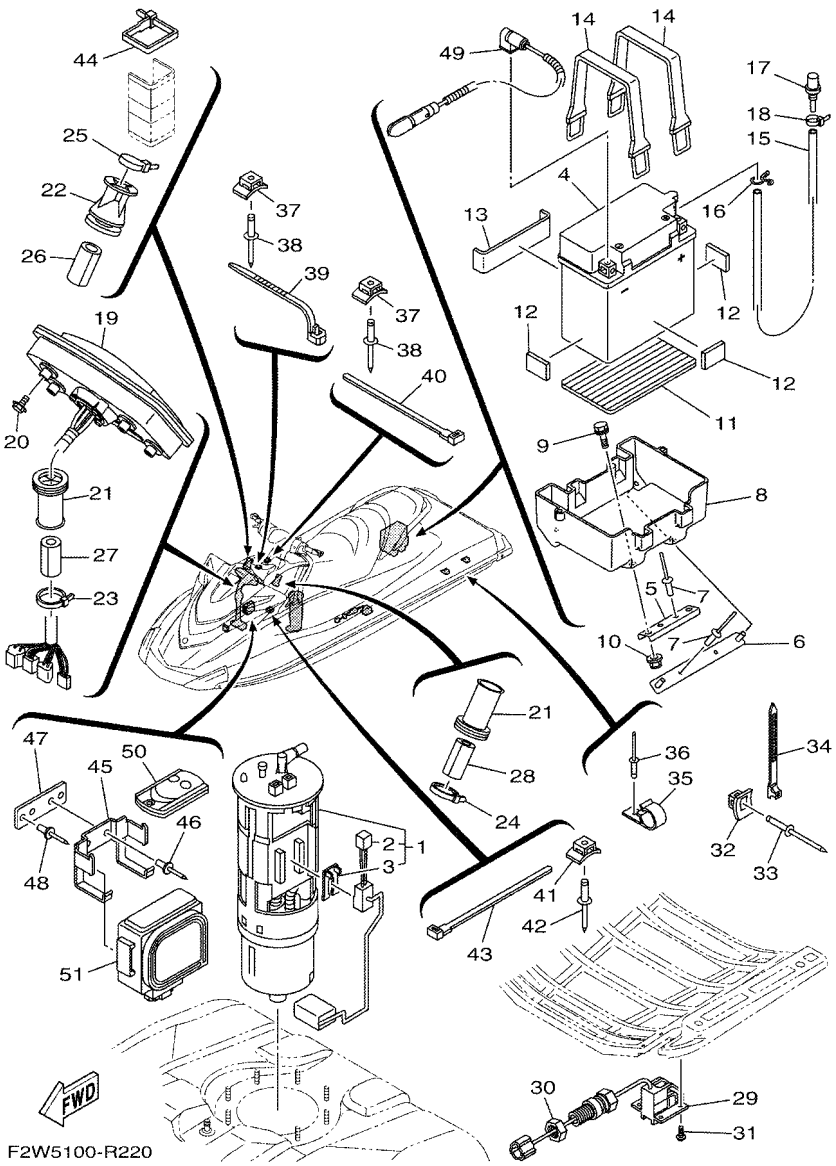

FIG. 22 ELECTRICAL 3

REF. NO.	PART NO.	DESCRIPTION	F4E3	F4E4				REMARKS
28	GJ1–U7578–11	PACKING, HOSE 2	1	1				
29	F1S–U8K31–02	SENSOR SPEED	1	1				
30	F2C–U151S–00	NUT	1	1				
31	90150–05807	SCREW, ROUND HEAD	4	4				
32	F1W–U828M–00	BASE, CLAMP	9	9				
33	90267–489U6	RIVET, BLIND	9	9				
34	90464–32801	CLAMP	9	9				
35	F3J–U8368–01	CLAMP	2	2				
36	90267–409U5	RIVET, BLIND	2	2				
37	F1W–U828M–00	BASE, CLAMP	3	3				
38	90267–489U6	RIVET, BLIND	3	3				
39	90464–32801	CLAMP	2	2				
40	90601–200U2	BAND	1	1				
41	F1W–U828M–00	BASE, CLAMP	1	1				
42	90267–489U6	RIVET, BLIND	1	1				
43	90601–200U2	BAND	1	1				
44	90601–200U2	BAND	1	1				
45	F1W–U826C–00	BRACKET	1	1				
46	90267–489U1	RIVET,BLIND	2	2				
47	F1W–U8376–00	PLATE	1	1				
48	90267–489U1	RIVET,BLIND	2	2				
49	6S5–82116–00	WIRE, MINUS LEAD	1	1				
50	6B6–86261–00	XMTR. COMP.	1					FOR CAN
	6B6–86261–10	XMTR. COMP.		2				FOR EUR
51	6B6–86265–00	RECEIVER COMPLETE	1					FOR CAN
	6B6–86265–10	RECEIVER COMPLETE		1				FOR EUR

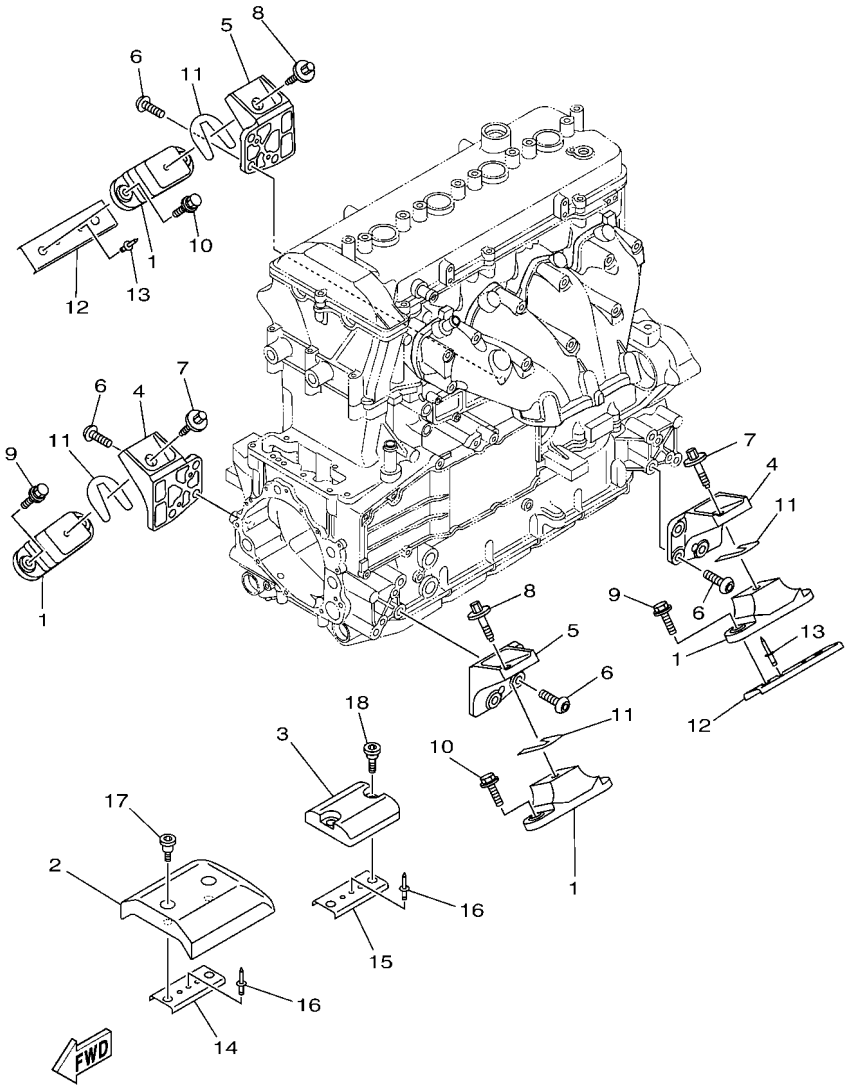

F2W1100-P230

FIG. 23 ENGINE MOUNT

REF. NO.	PART NO.	DESCRIPTION	F4E3	F4E4				REMARKS
1	67X–44517–10	MOUNT RUBBER	4	4				
2	6CN–G4532–00	STOPPER, UPPER MOUNT	1	1				
3	6CN–G4574–00	STOPPER, LOWER MOUNT RUBBER	1	1				
4	6BH–41661–00–94	BRACKET 1	2	2				
5	6BH–41662–00–94	BRACKET 2	2	2				
6	90149–10052	SCREW	12	12				
7	90119–08859	BOLT, WITH WASHER	2	2				
8	90119–08859	BOLT, WITH WASHER	2	2				
9	90119–08823	BOLT, WITH WASHER	4	4				
10	90119–08823	BOLT, WITH WASHER	4	4				
11	EU0–U7354–00–01	SHIM (T=0.1)	4	4				UN
	EU0–U7354–00–03	SHIM (T=0.3)	4	4				UN
	EU0–U7354–00–05	SHIM (T=0.5)	4	4				UN
	EU0–U7354–00–10	SHIM (T=1.0)	4	4				UN
	EU0–U7354–00–20	SHIM (T=2.0)	4	4				UN
12	F2S–U732B–00	PLATE	2	2				
13	90267–489U2	RIVET, BLIND	4	4				
14	F2M–U732B–00	PLATE	1	1				
15	F2M–U732B–00	PLATE	1	1				
16	90267–489U2	RIVET, BLIND	4	4				
17	90109–06874	BOLT	2	2				
18	90109–06875	BOLT	2	2				

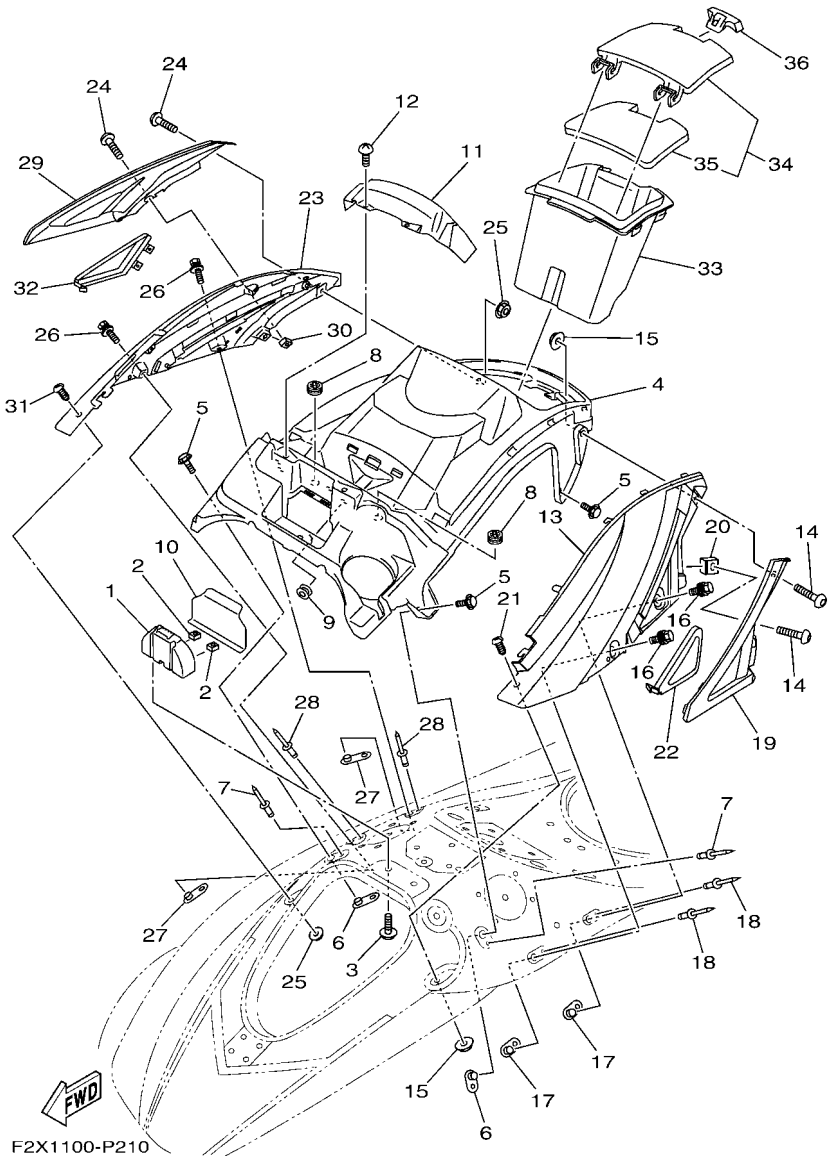

FIG. 24 ENGINE HATCH 1

REF. NO.	PART NO.	DESCRIPTION	F4E3	F4E4				REMARKS
1	F2X–U517F–00	HOOK,LID LOCK	1	1				
2	F2X–U517E–00	NUT	2	2				
3	90119–06880	BOLT, WITH WASHER	2	2				
4	F2X–U5554–00	COVER, CENTER	1	1				
5	90119–06882	BOLT, WITH WASHER	4	4				
6	F2X–U5175–00	PLATE, FIX	2	2				
7	90267–489U1	RIVET,BLIND	2	2				
8	F1X–U828E–01	DAMPER 1	2	2				
9	90480–19800	GROMMET	4	4				
10	F2X–U555B–00	SEAL, COVER CENTER	1	1				
11	F2X–U8262–00	COVER METER	1	1				
12	F2S–U13C1–00	SCREW	2	2				
13	F2X–U377B–00–P7	COVER,SIDE 1 (DNMC)	1	1				FOR GRAY
	F2X–U377B–00–P4	COVER,SIDE 1 (BMG)	1	1				FOR WHITE
14	90111–06803	BOLT,HEX. SOCKET BUTTON	2	2				
15	F2N–U142L–00	NUT, LOCK	2	2				
16	90119–06882	BOLT, WITH WASHER	2	2				
17	F2X–U5175–00	PLATE, FIX	2	2				
18	90267–489U1	RIVET,BLIND	2	2				
19	F2X–U377F–00	ORNAMENT, SIDE LH	1	1				
20	F2X–U517E–00	NUT	1	1				
21	F2N–67823–10	SCREW	1	1				
22	F2X–U377H–00	INNER, COVER SIDE 1	1	1				
23	F2X–U377C–00–P7	COVER,SIDE 2 (DNMC)	1	1				FOR GRAY
	F2X–U377C–00–P4	COVER,SIDE 2 (BMG)	1	1				FOR WHITE
24	90111–06803	BOLT,HEX. SOCKET BUTTON	2	2				
25	F2N–U142L–00	NUT, LOCK	2	2				

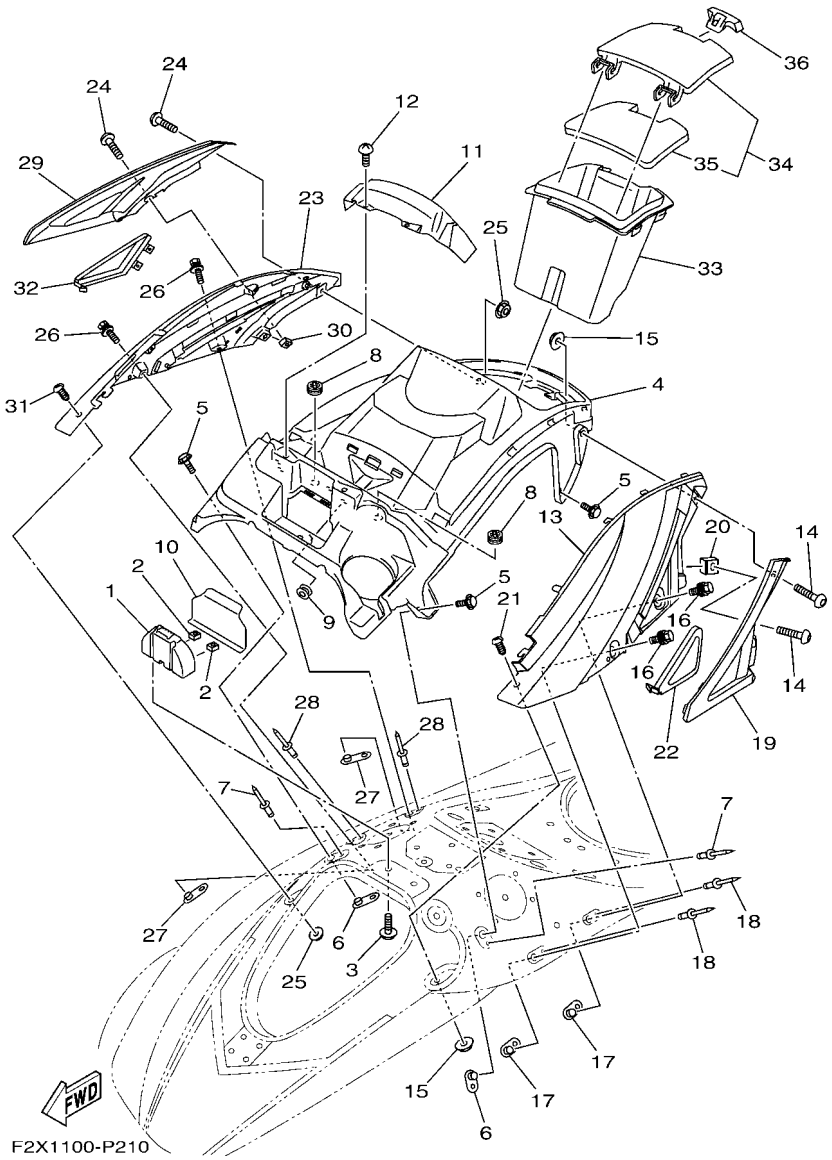

FIG. 24 ENGINE HATCH 1

REF. NO.	PART NO.	DESCRIPTION	F4E3	F4E4				REMARKS
26	90119–06882	BOLT, WITH WASHER	2	2				
27	F2X–U5175–00	PLATE, FIX	2	2				
28	90267–489U1	RIVET,BLIND	2	2				
29	F2X–U377G–00	ORNAMENT, SIDE RH	1	1				
30	F2X–U517E–00	NUT	1	1				
31	F2N–67823–10	SCREW	1	1				
32	F2X–U377J–00	INNER, COVER SIDE 2	1	1				
33	F2X–U516P–00	BOX GLOVE	1	1				
34	F2X–U1708–00	GLOVE BOX HATCH ASSY.	1	1				
35	F2X–U519D–00	.PACKING CASE	1	1				
36	F2X–U2875–00	LOCK	1	1				

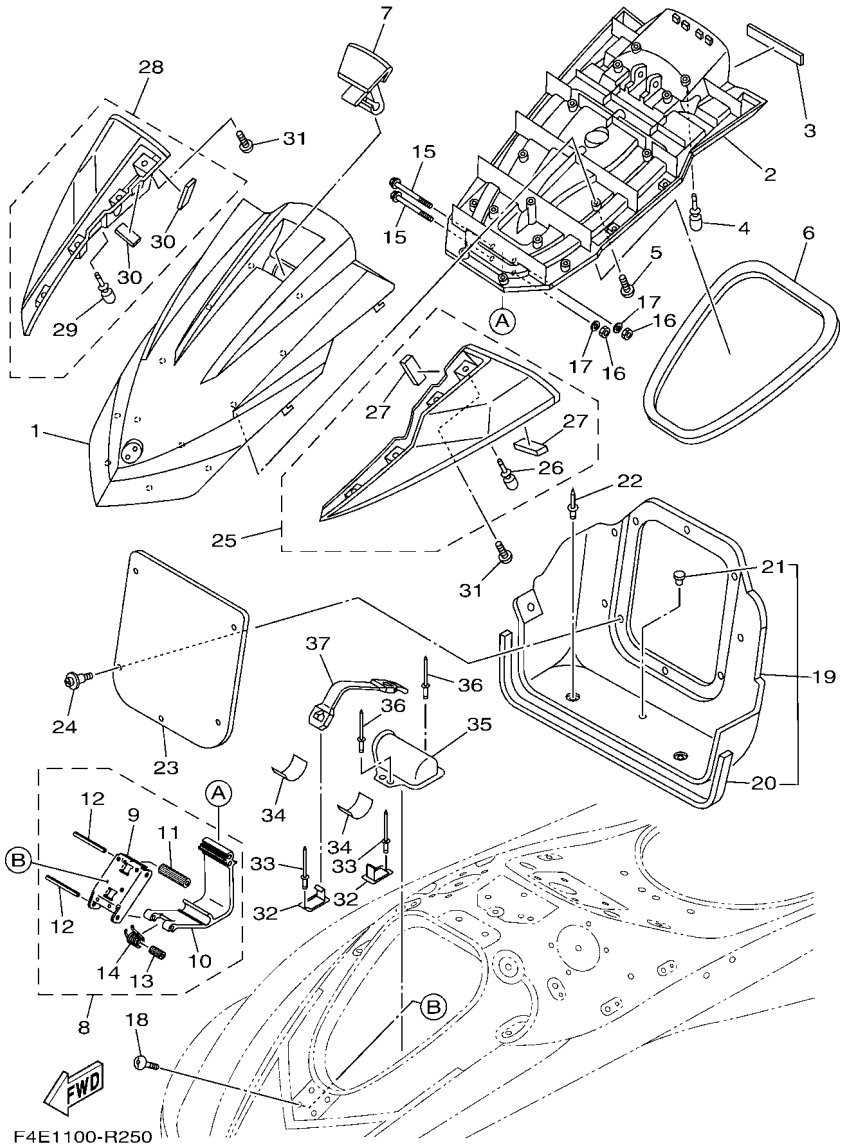

FIG. 25 ENGINE HATCH 2

REF. NO.	PART NO.	DESCRIPTION	F4E3	F4E4				REMARKS
1	F2X–U517B–00–P9	LID, ENGINE ROOM (DNMC)	1	1				FOR GRAY
	F2X–U517B–00–P4	LID, ENGINE ROOM (BMG)	1	1				FOR WHITE
2	F2X–U519G–00	INNER, ENGINE HATCH	1	1				
3	F2C–U515D–00	DAMPER 1	1	1				
4	F1W–U3768–01	CUSHION, RUBBER	2	2				
5	F2S–U13C1–00	SCREW	15	15				
6	F2N–U2663–01	PACKING 1	1	1				
7	F2X–U517C–01	LOCK, LID	1	1				
8	F2X–U515A–01	HINGE ASSY.	1	1				
9	F1K–U518E–04	.PLATE, HINGE LID	1	1				
10	F1K–U517D–05	.HINGE, LID	1	1				
11	F2X–U135C–00	.ROLLER, DETENT	1	1				
12	F1K–U517R–01	.PIN, HINGE	2	2				
13	F1K–U471E–03	.SPACER 1	1	1				
14	F1K–U283B–02	.SPRING, TORSION	1	1				
15	90105–06826	BOLT, FLANGE	2	2				
16	9572R–06300	NUT, NYLON	2	2				
17	9299R–06200	WASHER	2	2				
18	F4G–U7823–10	SCREW	4	4				
19	F2X–U475B–00	LOCKER,BOW	1	1				
20	F2N–U266C–01	.PACKING 4	1	1				
21	90605–502U1	.PLUG, BLIND	1	1				
22	90269–08801	RIVET	4	4				
23	F2S–U475F–00	PLATE, LOKER BOW	1	1				
24	90269–08801	RIVET	5	5				
25	F2X–U590D–70	MIRROR ASSY. 1	1	1				FOR GRAY
	F2X–U590D–30	MIRROR ASSY. 1	1	1				FOR WHITE

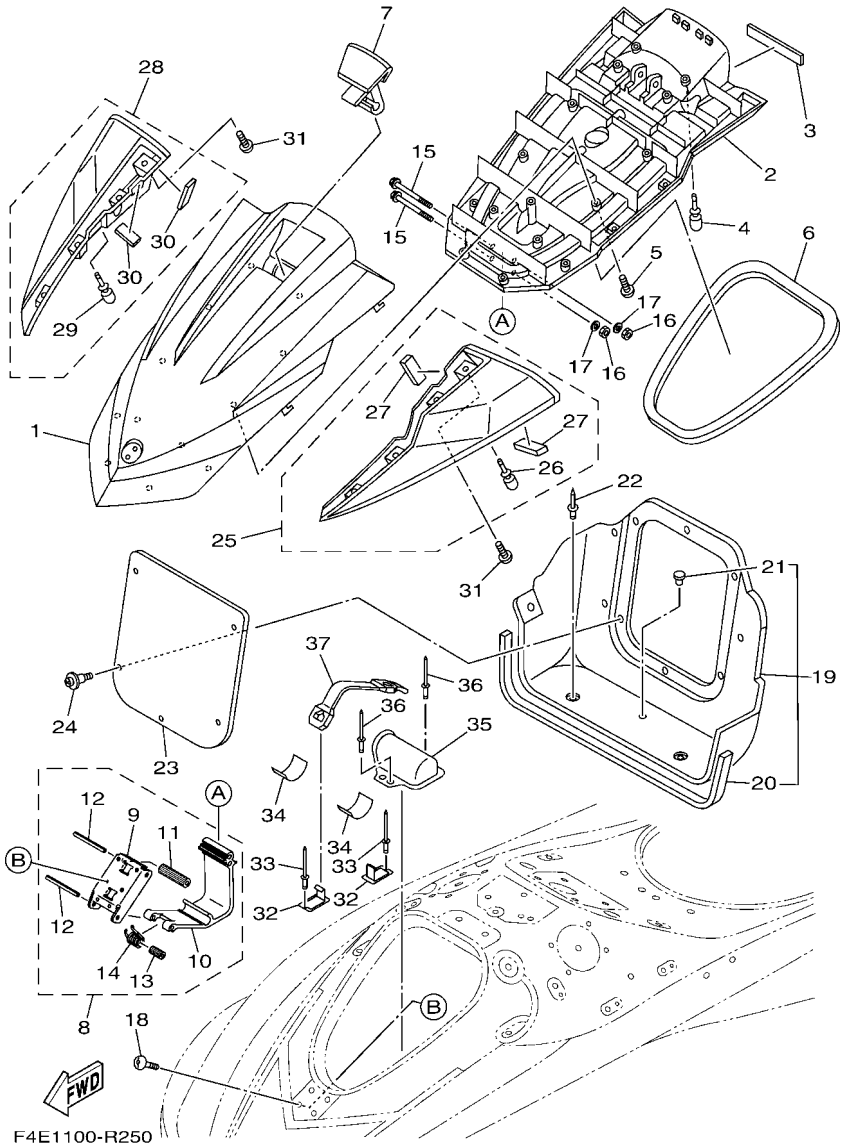

FIG. 25 ENGINE HATCH 2

REF. NO.	PART NO.	DESCRIPTION	F4E3	F4E4				REMARKS
26	F1W–U3768–01	.CUSHION, RUBBER	1	1				
27	F1K–U266B–00	.PACKING 3	2	2				
28	F2X–U590E–70	MIRROR ASSY. 2	1	1				FOR GRAY
	F2X–U590E–30	MIRROR ASSY. 2	1	1				FOR WHITE
29	F1W–U3768–01	.CUSHION, RUBBER	1	1				
30	F1K–U266B–00	.PACKING 3	2	2				
31	F2X–U13C1–00	SCREW	8	8				
32	F1K–U5772–04	HOOK A	2	2				
33	90267–489U1	RIVET,BLIND	2	2				
34	F1K–U759C–00	MAT 2	2	2				
35	F2X–U5983–00	BOX, FIRE EXTINGUISHER	1	1				
36	90267–48802	RIVET, BLIND	2	2				
37	F2P–U828K–00	BAND 1	1	1				

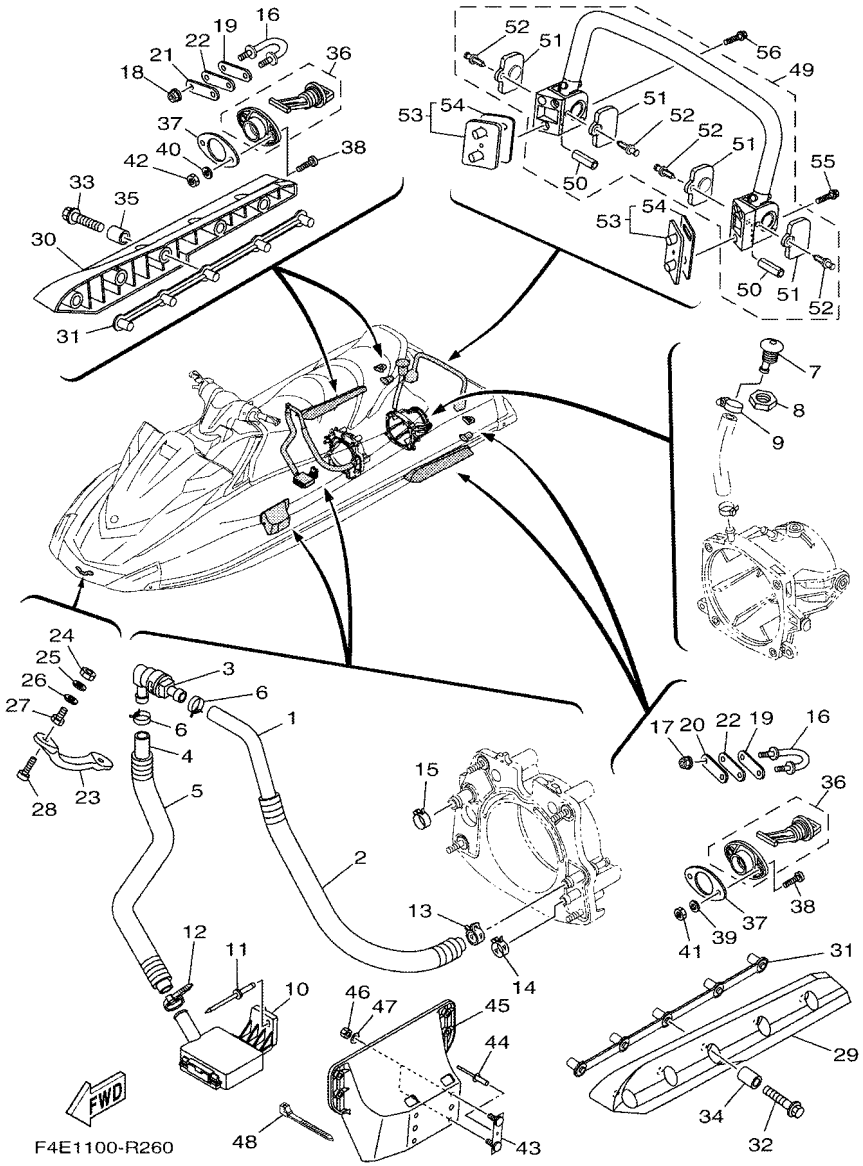

FIG. 26 HULL & DECK

REF. NO.	PART NO.	DESCRIPTION	F4E3	F4E4				REMARKS
1	90445–20804	HOSE (L860)	1	1				
2	6EX–U773E–00	TUBE,2	1	1				
3	68N–5112T–00	JOINT, HOSE	1	1				
4	90445–20800	HOSE (L500)	1	1				
5	6EX–U773D–00	TUBE	1	1				
6	90467–18804	CLIP	2	2				
7	F1W–U269B–00	SPOUT	1	1				
8	EU0–61652–00	NUT	1	1				
9	90601–118UF	BAND, HOSE 18	1	1				
10	F1B–U761D–02	STRAINER, BILGE	1	1				
11	90267–489U8	RIVET, BLIND	1	1				
12	90465–11829	CLAMP	1	1				
13	90467–21800	CLIP	1	1				
14	90467–200A0	CLIP	1	1				
15	90467–26800	CLIP	1	1				
16	F2N–U1628–02	STERN EYE	2	2				
17	9572R–08300	NUT, FLANGE	2	2				
18	9572R–08300	NUT, FLANGE	2	2				
19	GP7–U4953–10	PLATE A	2	2				
20	GP7–U4953–10	PLATE A	1	1				
21	GP7–U4953–10	PLATE A	1	1				
22	F1B–U1653–02	PACKING	2	2				
23	F1K–61624–00	BOW EYE 1	1	1				
24	99780–12600	NUT.HEX.(COARS)	2	2				
25	92990–12200	WASHER, PLAIN	2	2				
26	F0X–61637–00	WASHER	2	2				
27	F0X–61652–00	NUT (BOLT/NUT)	2	2				

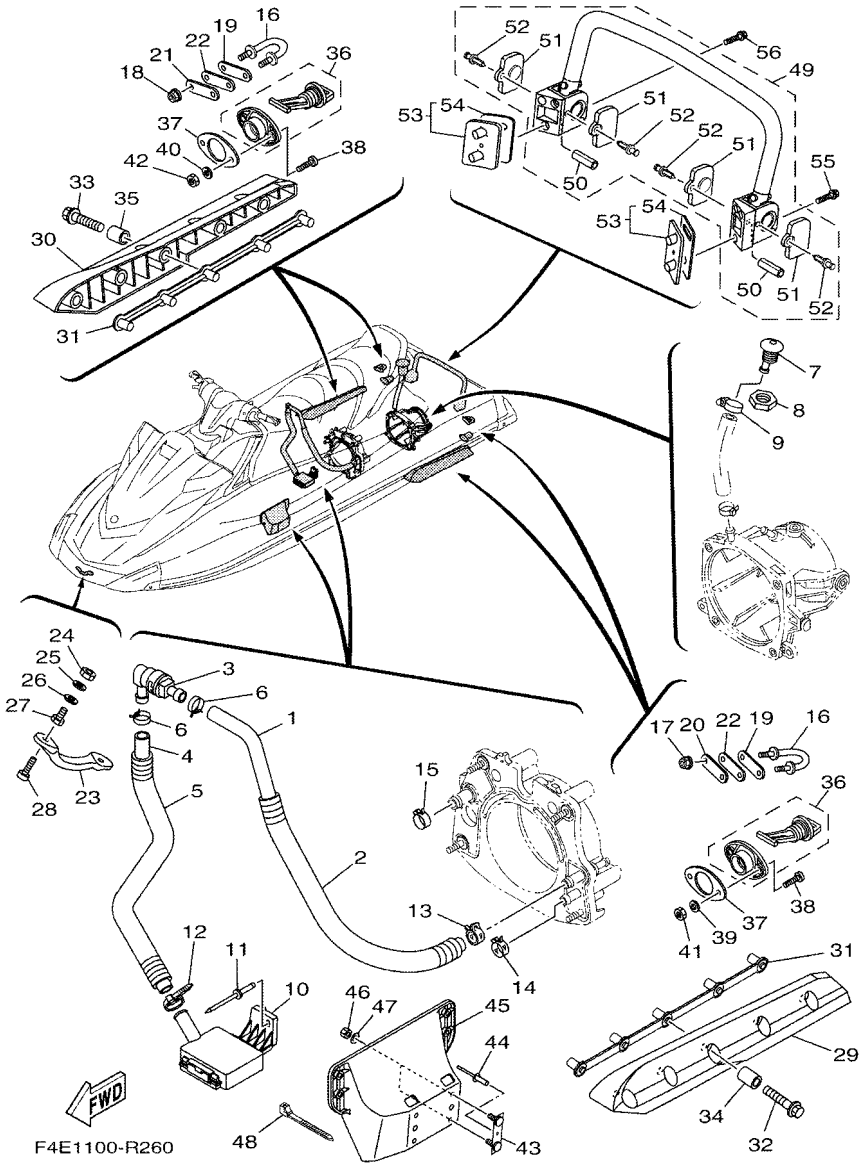

FIG. 26 HULL & DECK

REF. NO.	PART NO.	DESCRIPTION	F4E3	F4E4				REMARKS
28	90110–06040	BOLT, HEXAGON SOCKET HEAD	2	2				
29	F1S–U883N–01	STABILIZER LH	1	1				BLACK
30	F1S–U883P–01	STABILIZER RH	1	1				BLACK
31	F1X–U883T–01	BRACKET,STABILIZER	2	2				
32	90105–08860	BOLT, FLANGE	5	5				
33	90105–08860	BOLT, FLANGE	5	5				
34	F2N–U8169–00	SPACER	5	5				
35	F2N–U8169–00	SPACER	5	5				
36	F1S–U2280–02	DRAIN PLUG ASSY.	2	2				
37	F1S–U2285–00	PACKING, DRAIN	2	2				
38	9788R–05025	SCREW, PAN HEAD	4	4				
39	9299R–05200	WASHER	2	2				
40	9299R–05200	WASHER	2	2				
41	9572R–05300	NUT, FLANGE	2	2				
42	9572R–05300	NUT, FLANGE	2	2				
43	F1K–U826C–03	BRACKET	2	2				
44	90267–489U1	RIVET,BLIND	2	2				
45	F1W–U8572–01	BRACKET 2	1	1				
46	9572R–08300	NUT, FLANGE	4	4				
47	9299R–08200	WASHER	4	4				
48	90464–32801	CLAMP	1	1				
49	F2X–U278A–00	LADDER, STEP ASSY	1	1				
50	F1W–U771H–00	.SLEEVE 1	2	2				
51	F2C–U377H–00	.INNER, COVER SIDE 1	4	4				
52	F2C–U1314–00	.PIN	4	4				
53	F2S–U278F–00	BRACKET, LADDER LH	2	2				
54	F2S–U278H–00	.PACKING, BRKT. 1	2	2				

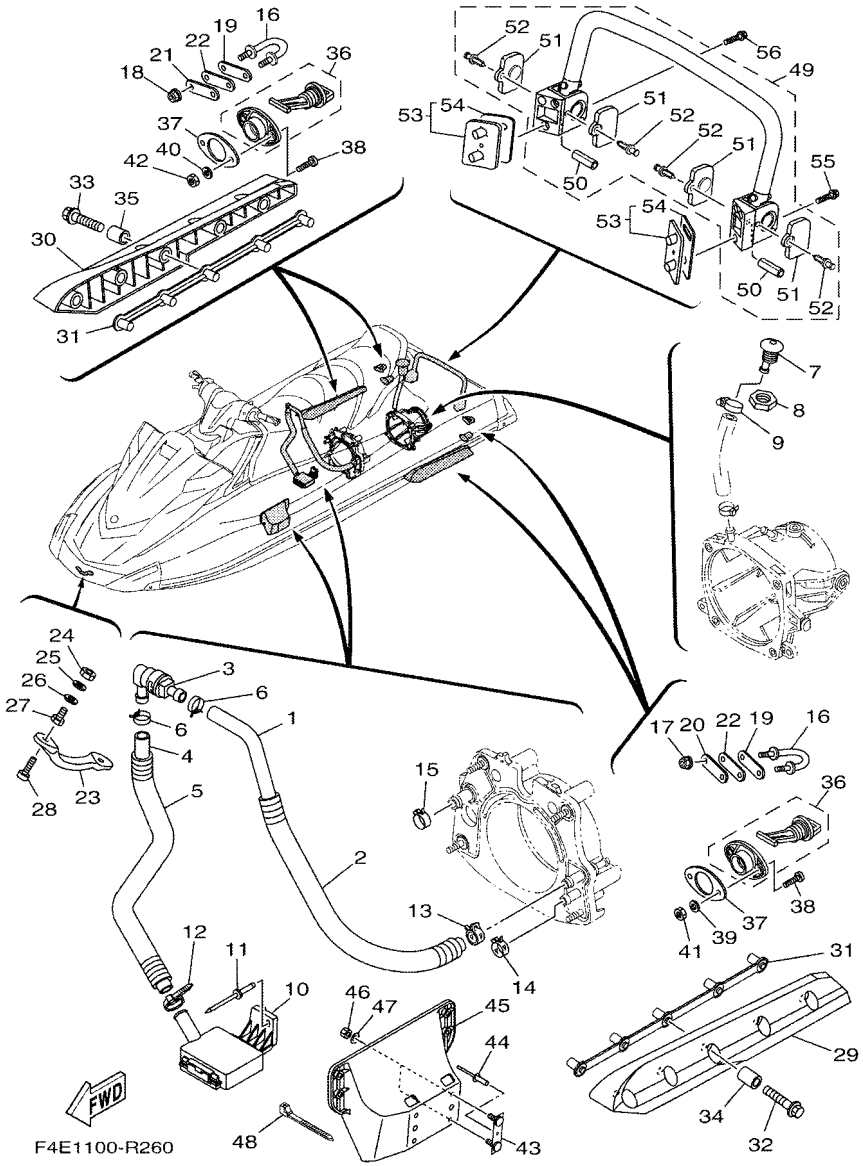

FIG. 26 HULL & DECK

REF. NO.	PART NO.	DESCRIPTION	F4E3	F4E4				REMARKS
55	90119–08861	BOLT, WITH WASHER	2	2				
56	90119–08861	BOLT, WITH WASHER	2	2				

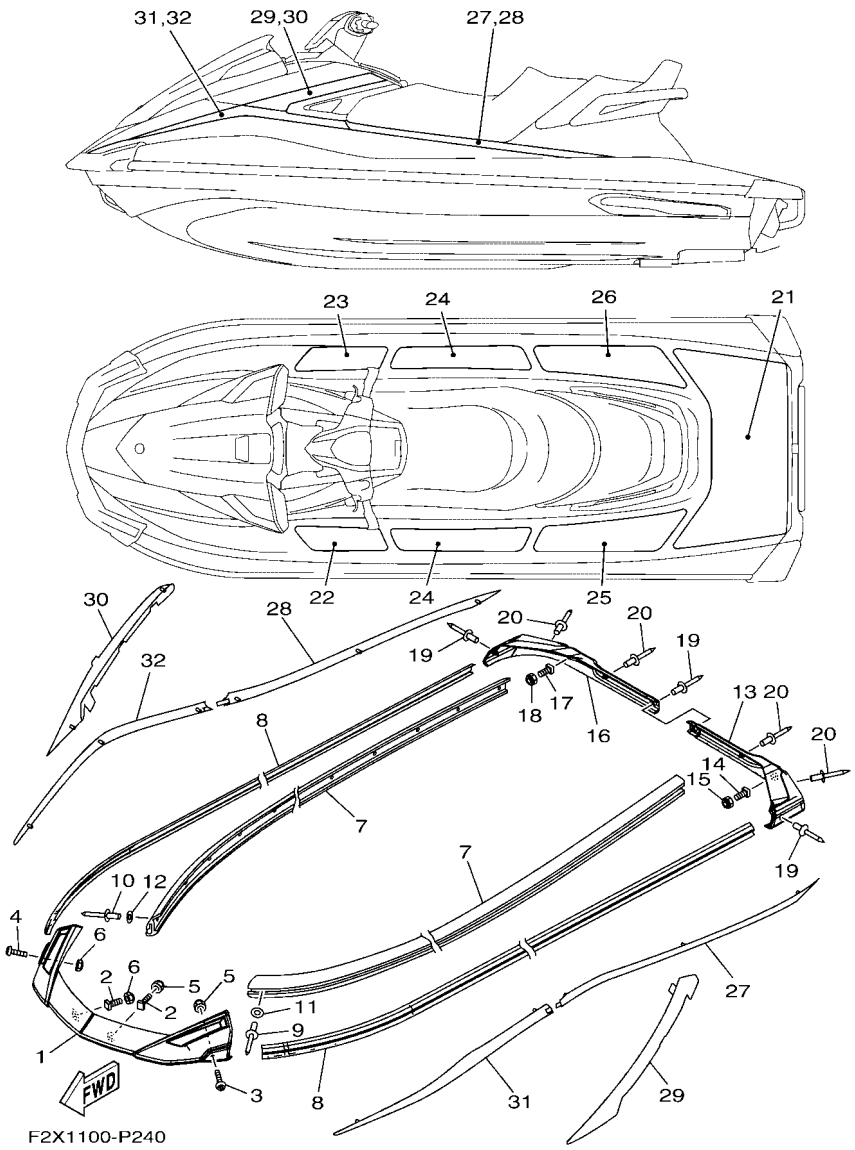

FIG. 27 GUNWALE & MAT

REF. NO.	PART NO.	DESCRIPTION	F4E3	F4E4				REMARKS
1	F2X–U2511–10	GUNWALE, BOW	1	1				BLACK
2	F1W–U491K–00	BOLT, SPECIAL	2	2				
3	90110–06191	BOLT, HEXAGON SOCKET HEAD	1	1				
4	90110–06191	BOLT, HEXAGON SOCKET HEAD	1	1				
5	F2N–U142L–00	NUT, LOCK	2	2				
6	F2N–U142L–00	NUT, LOCK	2	2				
7	F2X–U2512–10	GUNWALE, SIDE	2	2				BLACK
8	F2X–U2519–30	INNER,GUNWALE	2	2				FOR GRAY
	F2X–U2519–60	INNER,GUNWALE	2	2				FOR WHITE
9	90267–489U8	RIVET, BLIND	15	15				
10	90267–489U8	RIVET, BLIND	15	15				
11	9299R–05200	WASHER	15	15				
12	9299R–05200	WASHER	15	15				
13	F2X–U251D–10	GUNWALE, STERN 1	1	1				BLACK
14	F1W–U491K–00	BOLT, SPECIAL	1	1				
15	F2N–U142L–00	NUT, LOCK	1	1				
16	F2X–U251E–10	GUNWALE, STERN 2	1	1				BLACK
17	F1W–U491K–00	BOLT, SPECIAL	1	1				
18	F2N–U142L–00	NUT, LOCK	1	1				
19	90267–48825	RIVET, BLIND	3	3				
20	90267–48825	RIVET, BLIND	4	4				
21	F2X–U3581–01	MAT, UPPER	1	1				GREY & BLACK
22	F2X–U351H–00	MAT, STEP 1	1	1				GREY & BLACK
23	F2X–U351J–00	MAT, STEP 2	1	1				GREY & BLACK
24	F2X–U351K–00	MAT, STEP 3	2	2				GREY & BLACK
25	F2X–U351M–00	MAT, STEP 4	1	1				GREY & BLACK
26	F2X–U351N–00	MAT, STEP 5	1	1				GREY & BLACK

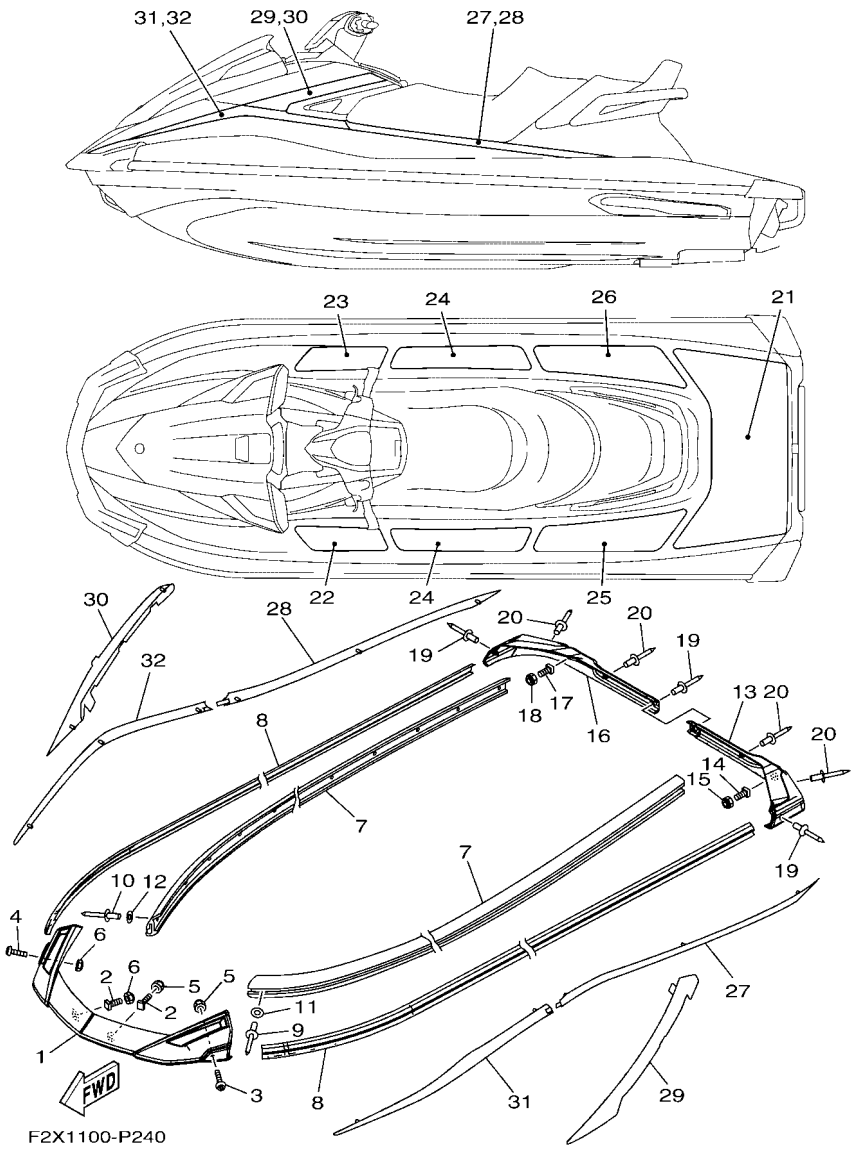

FIG. 27 GUNWALE & MAT

REF. NO.	PART NO.	DESCRIPTION	F4E3	F4E4				REMARKS
27	F2X–U89A8–00	ORNAMENT, STERN LH	1	1				BLACK
28	F2X–U89A9–00	ORNAMENT, STERN RH	1	1				BLACK
29	F2X–U89AA–00	ORNAMENT, MIDDLE LH	1	1				BLACK
30	F2X–U89AB–00	ORNAMENT, MIDDLE RH	1	1				BLACK
31	F2X–U89AC–00	ORNAMENT, BOW LH	1	1				BLACK
32	F2X–U89AD–00	ORNAMENT, BOW RH	1	1				BLACK

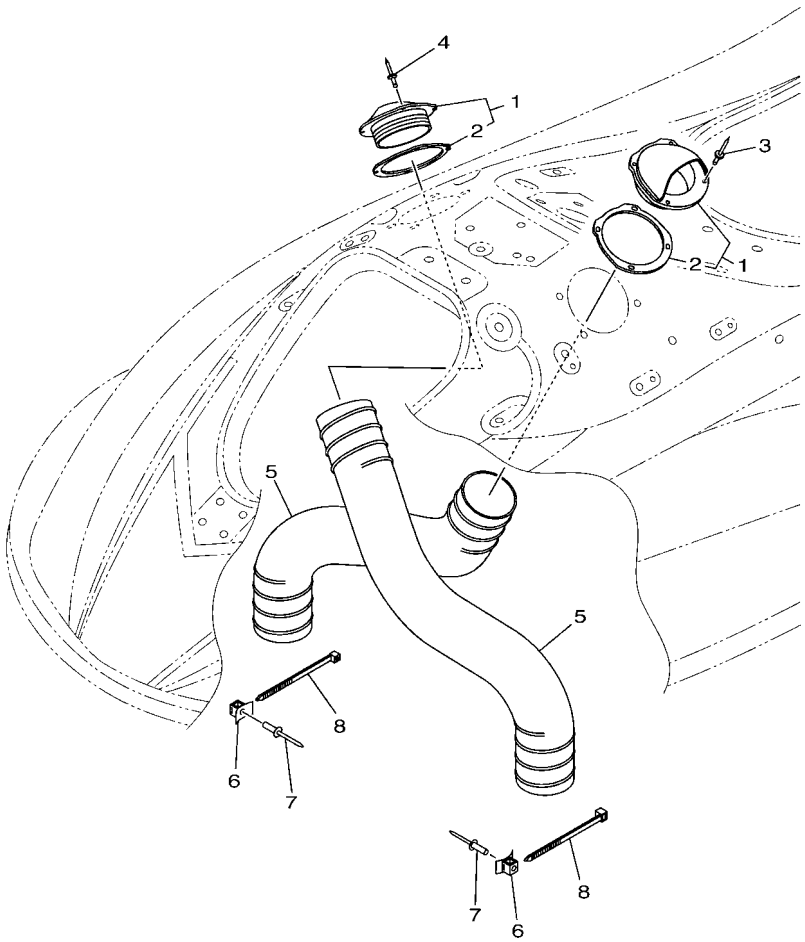

F2X1100-P250

FIG. 28 VENTILATION

REF. NO.	PART NO.	DESCRIPTION	F4E3	F4E4				REMARKS
1	F2X–U2127–00	BASE, AIR INTAKE	2	2				
2	F2X–U2157–00	.PACKING	1	1				
3	90267–48806	RIVET, BLIND	4	4				
4	90267–48806	RIVET, BLIND	4	4				
5	F2N–U213G–01	HOSE, VENTILATOR 2	2	2				
6	F1W–U828M–00	BASE, CLAMP	2	2				
7	90267–489U6	RIVET, BLIND	2	2				
8	90464–99804	CLAMP	2	2				

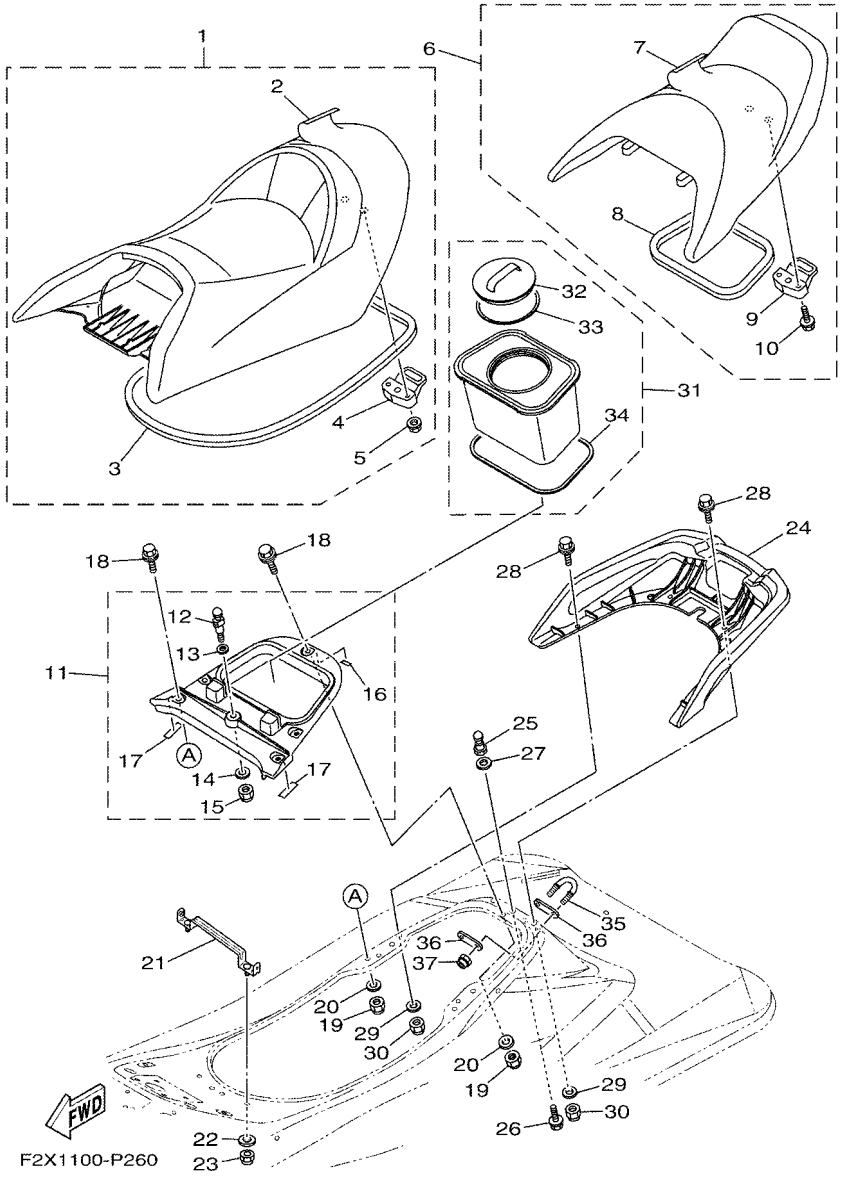

FIG. 29 SEAT & UNDER LOCKER

REF. NO.	PART NO.	DESCRIPTION	F4E3	F4E4				REMARKS
1	F2X–U371A–70	DOUBLE SEAT ASSY	1	1				FOR GRAY
	F2X–U371A–80	DOUBLE SEAT ASSY	1	1				FOR WHITE
2	F2X–U371B–70	.COVER, SEAT 1	1	1				FOR GRAY
	F2X–U371B–80	.COVER, SEAT 1	1	1				FOR WHITE
3	F1W–U2664–01	.PACKING	1	1				
4	F2C–U3850–00	.SEAT LOCK ASSY	1	1				
5	90119–069UP	.BOLT, WITH WASHER	2	2				
6	F2X–U372A–70	SINGLE SEAT ASSY	1	1				FOR GRAY
	F2X–U372A–80	SINGLE SEAT ASSY	1	1				FOR WHITE
7	F2X–U372B–70	.COVER, SEAT	1	1				FOR GRAY
	F2X–U372B–80	.COVER, SEAT	1	1				FOR WHITE
8	F2C–U266D–01	.PACKING 5	1	1				
9	F1B–U3850–02	.SEAT LOCK ASSY	1	1				
10	90119–069UP	.BOLT, WITH WASHER	2	2				
11	F2S–U890L–04	DECK BEAM ASSY	1	1				
12	GH1–U3774–00	.PIN	1	1				
13	90201–109U6	.WASHER, PLATE	1	1				
14	9299R–10200	.WASHER	1	1				
15	9572R–10300	.NUT, NYLON	1	1				
16	F2S–U375E–00	.PACKING 1	1	1				
17	F2S–U8244–00	.PACKING	2	2				
18	90119–08828	BOLT, WITH WASHER	5	5				
19	9572R–08300	NUT, FLANGE	5	5				
20	9299R–08200	WASHER	5	5				
21	F2X–U378C–00	STAY, SEAT 1	1	1				
22	90201–099U3	WASHER, PLATE	2	2				
23	9572R–08300	NUT, FLANGE	2	2				

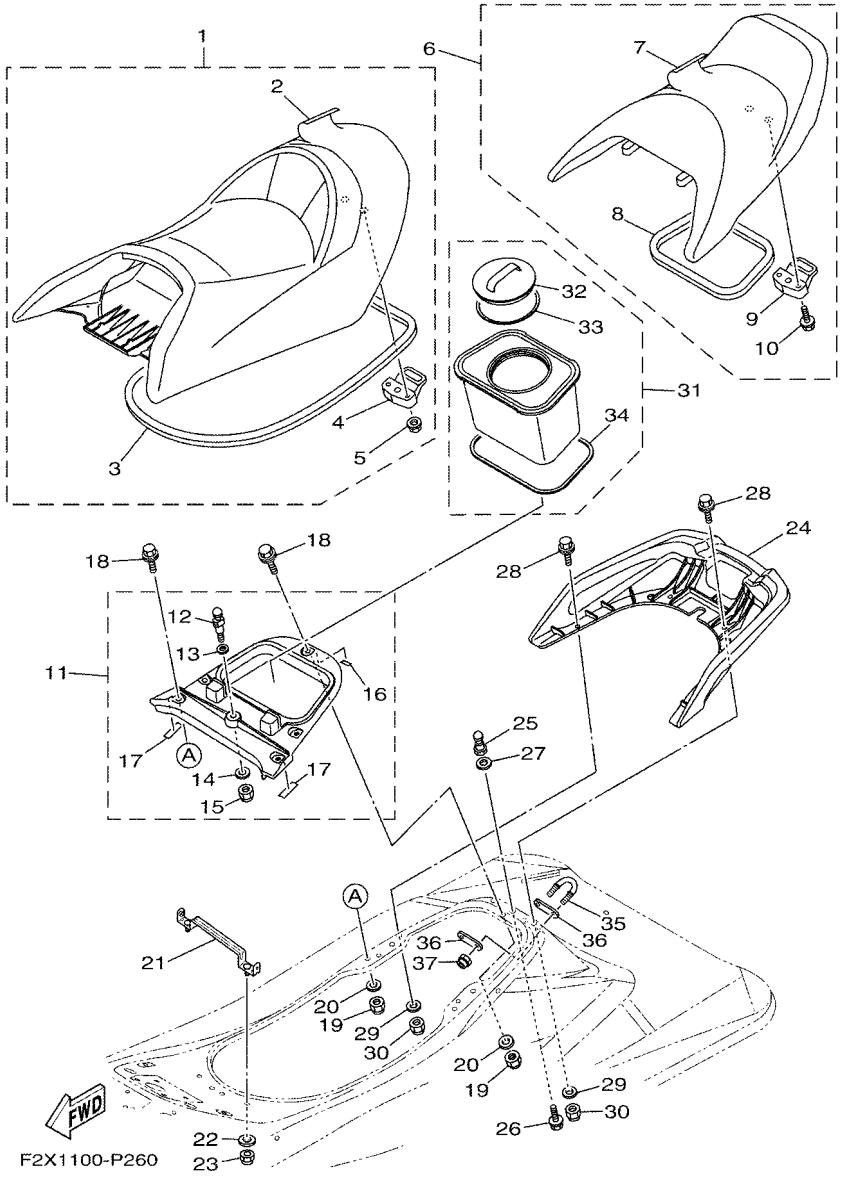

FIG. 29 SEAT & UNDER LOCKER

REF. NO.	PART NO.	DESCRIPTION	F4E3	F4E4				REMARKS
24	F2X–U271B–10	GRIP, HAND	1	1				
25	F1K–U3774–00	PIN	1	1				
26	90119–10804	BOLT, WITH WASHER	1	1				
27	9299R–10200	WASHER	1	1				
28	90119–08828	BOLT, WITH WASHER	4	4				
29	9299R–08200	WASHER	4	4				
30	9572R–08300	NUT, FLANGE	4	4				
31	F2X–U591A–01	CASE ASSY 1	1	1				
32	F2C–U591C–00	.CAP,CASE	1	1				
33	F2C–U591D–01	.PACKING,CASE	1	1				
34	F2C–U266E–00	.PACKING,6	1	1				
35	F2N–U1628–02	STERN EYE	1	1				
36	GP7–U4953–10	PLATE A	2	2				
37	9572R–08300	NUT, FLANGE	2	2				

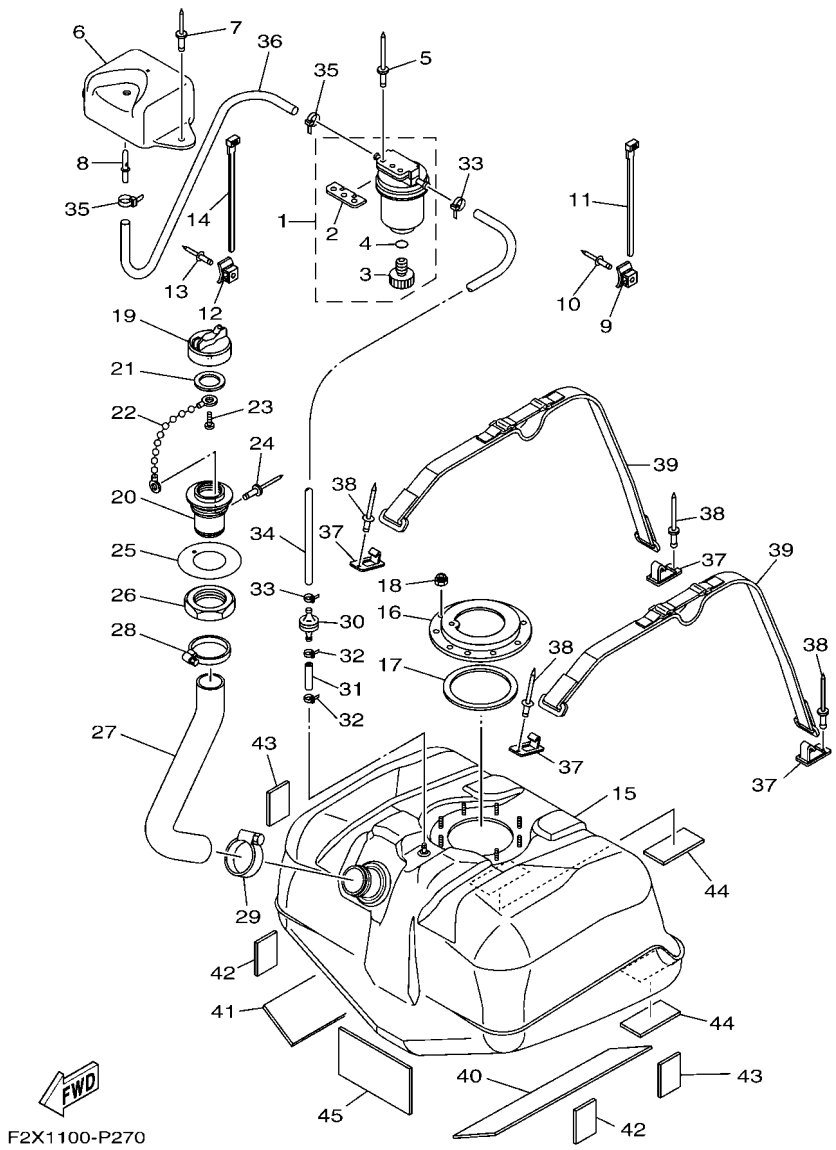

FIG. 30 FUEL TANK

REF. NO.	PART NO.	DESCRIPTION	F4E3	F4E4				REMARKS
1	F2F–6214A–00	FILTER, VENT ASSY	1	1				
2	EW2–62142–00	.PLATE, FILTER	1	1				
3	70R–24543–00	.PLUG, DRAIN	1	1				
4	70R–24489–00	.O-RING	1	1				
5	90267–489U2	RIVET, BLIND	2	2				
6	GP7–62159–02	SOCKET, VENTILATION	1	1				
7	90267–489U6	RIVET, BLIND	2	2				
8	F1G–62149–00	PIPE, VENTILATION	1	1				
9	F1W–U828M–00	BASE, CLAMP	1	1				
10	90267–489U6	RIVET, BLIND	1	1				
11	90464–32801	CLAMP	1	1				
12	F1W–U828M–00	BASE, CLAMP	1	1				
13	90267–489U6	RIVET, BLIND	1	1				
14	90464–32801	CLAMP	1	1				
15	F2S–U7711–02	TANK, FUEL	1	1				
16	F1B–U7773–00	RING	1	1				
17	F1B–67747–00	PACKING, SEAL	1	1				
18	9572R–06300	NUT, NYLON	9	9				
19	F2X–U7831–00	CAP, FUEL FILLER	1	1				
20	F2X–U7833–00	SOCKET	1	1				
21	GP7–U7832–01	PACKING	1	1				
22	GP7–U7835–00	CHAIN BALL	1	1				
23	90169–049U1	TAPPING SCREW	1	1				
24	90267–329UR	RIVET, BLIND	1	1				
25	GP7–U7834–10	PACKING FUEL FILLER	1	1				
26	GP7–U783F–00	NUT, FUEL FILLER	1	1				
27	F2X–U7844–01	HOSE	1	1				

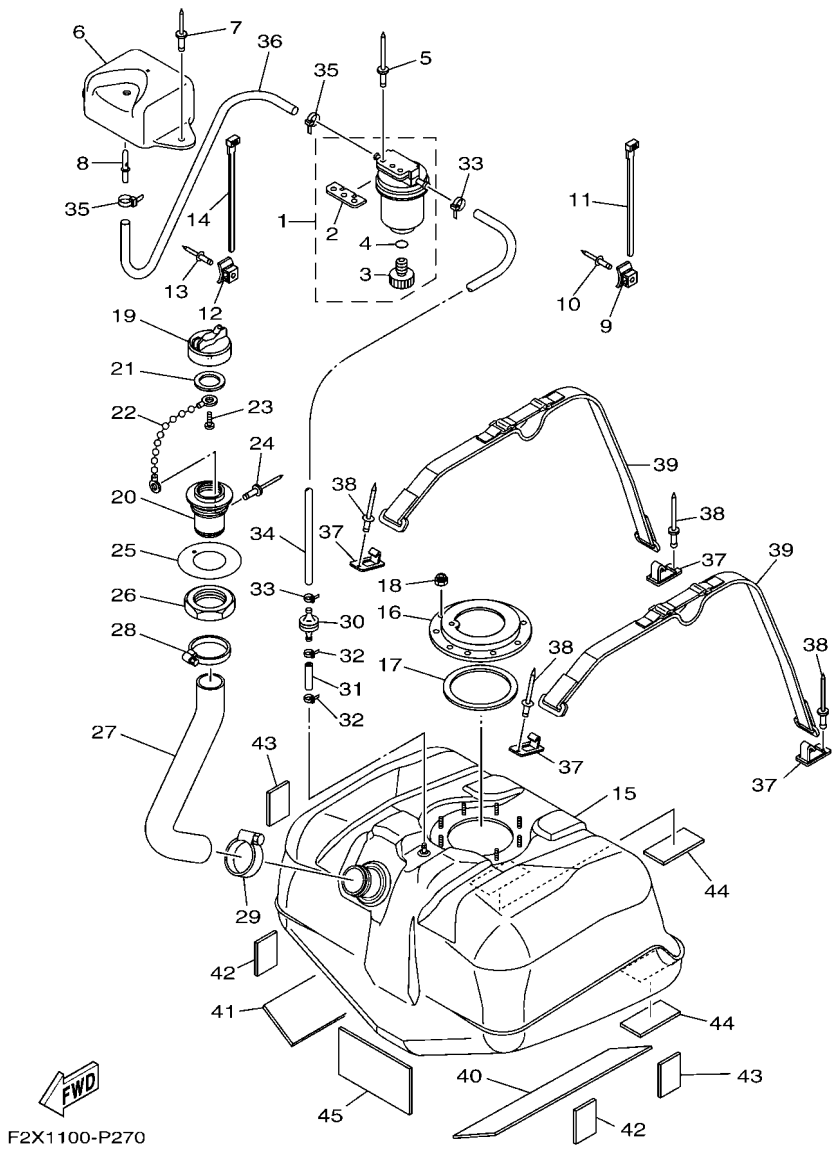

FIG. 30 FUEL TANK

REF. NO.	PART NO.	DESCRIPTION	F4E3	F4E4				REMARKS
28	90601–155U4	BAND, HOSE 55	1	1				
29	90601–155U4	BAND, HOSE 55	1	1				
30	EU0–67767–31	CHECK VALVE	1	1				
31	GP7–U785H–00	HOSE, AIR VENT 3	1	1				
32	90465–11829	CLAMP	2	2				
33	90465–11829	CLAMP	2	2				
34	F1K–U785G–00	HOSE, AIR VENT	1	1				
35	90465–11829	CLAMP	2	2				
36	F0D–U7856–10	HOSE, AIR VENT 3	1	1				
37	F1K–U5772–04	HOOK A	4	4				
38	90267–489U1	RIVET,BLIND	4	4				
39	F2S–67743–00	BELT, TANK 1	2	2				
40	F2S–U759B–00	MAT 1	1	1				
41	F2S–U759B–00	MAT 1	1	1				
42	F1W–U759C–01	MAT 2	2	2				
43	F1W–U759C–01	MAT 2	2	2				
44	F1K–U759C–00	MAT 2	2	2				
45	F1S–U8221–00	PAD, BATTERY	1	1				

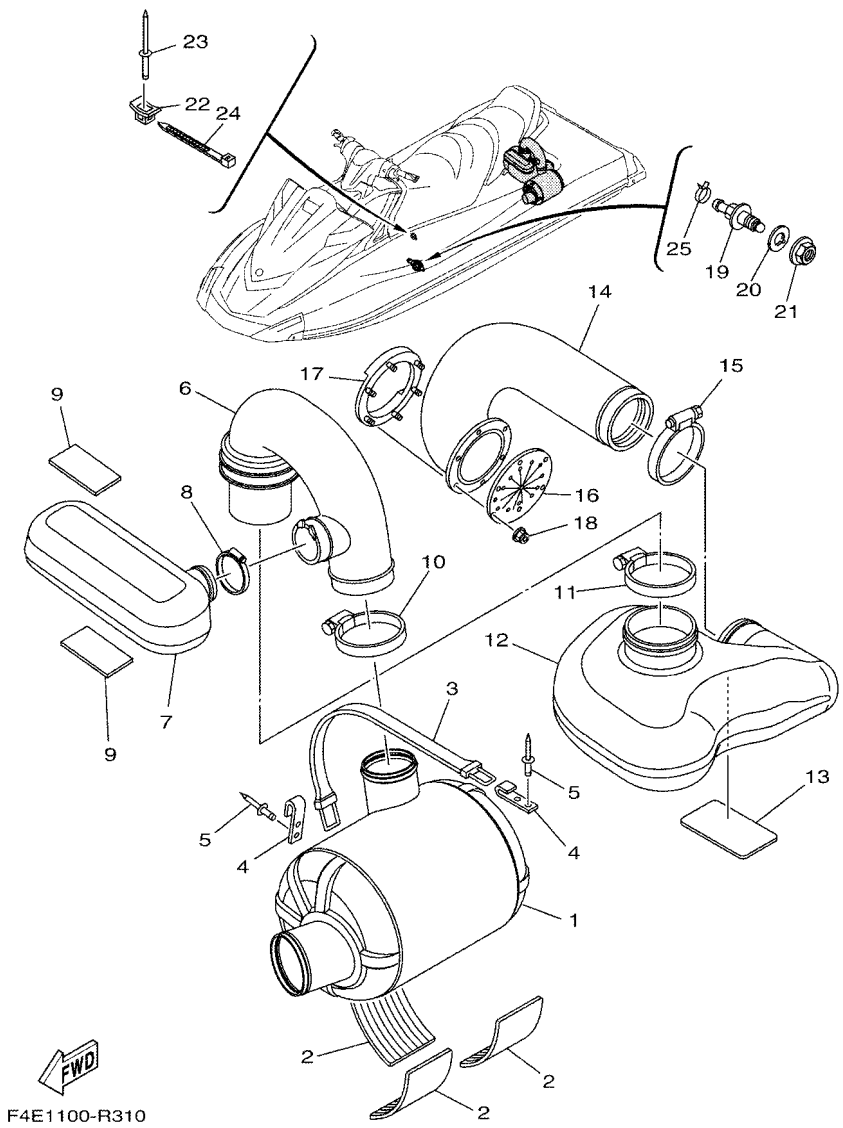

FIG. 31 EXHAUST 3

REF. NO.	PART NO.	DESCRIPTION	F4E3	F4E4				REMARKS
1	F1W–U7550–02	WATER LOCK COMP.	1	1				
2	F1S–U8221–00	PAD, BATTERY	3	3				
3	EW2–67821–00	BAND, FUEL TANK	1	1				
4	GA7–65772–00	HOOK A	2	2				
5	90267–489U1	RIVET,BLIND	4	4				
6	F2S–U7555–01	HOSE, EXHAUST	1	1				
7	F2S–U753C–00	RESONATOR 1	1	1				
8	90601–170UG	BAND, HOSE 70	1	1				
9	F1K–U759C–00	MAT 2	2	2				
10	90450–99801	HOSE CLAMP ASSY	1	1				
11	90450–99804	HOSE CLAMP ASSY	1	1				
12	F2N–U4261–00	TANK, WATER	1	1				
13	F1S–U8221–00	PAD, BATTERY	1	1				
14	F2N–U758D–00	HOSE,EXHAUST 3	1	1				
15	90450–99801	HOSE CLAMP ASSY	1	1				
16	F1B–U751G–00	VALVE, EXHAUST	1	1				
17	F1S–U757B–01	PLATE	1	1				
18	F2N–U142L–00	NUT, LOCK	6	6				
19	F2C–U753B–01	PILOT, WATER	1	1				
20	F2C–U7564–00	GASKET	1	1				
21	F2C–U2733–00	NUT	1	1				
22	F1W–U828M–00	BASE, CLAMP	1	1				
23	90267–489U6	RIVET, BLIND	1	1				
24	90464–32801	CLAMP	1	1				
25	90467–17802	CLIP	1	1				

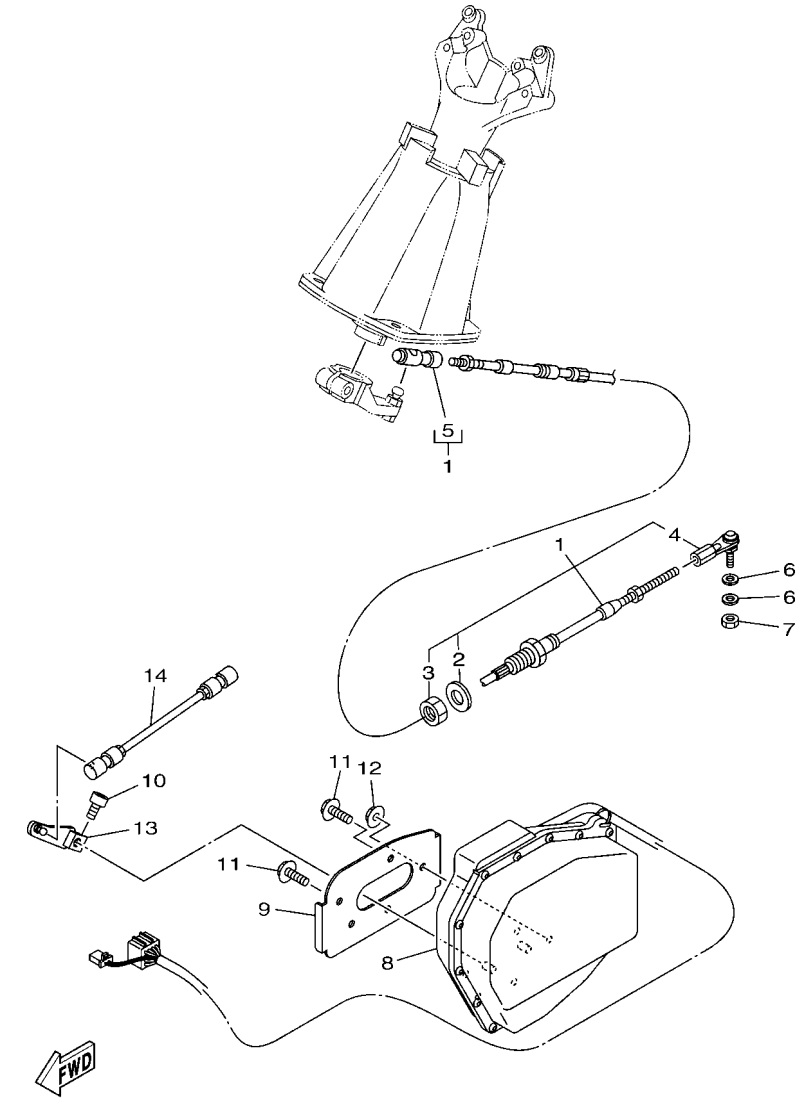

FIG. 32 CONTROL CABLE

REF. NO.	PART NO.	DESCRIPTION	F4E3	F4E4				REMARKS
1	F2N–61481–00	CABLE, STEERING	1	1				
2	F1B–61438–00	.PACKING C	1	1				
3	F1B–6151S–00	.NUT	1	1				
4	F1B–61461–02	.STUD, JOINT BALL	1	1				
5	F2N–61460–00	.BALL JOINT ASSY	1	1				
6	90201–06906	WASHER, PLATE	2	2				
7	9538R–06700	NUT	1	1				
8	F2X–6140B–00	MOTOR ASSY.	1	1				
9	F3J–U8285–00	PLATE	1	1				
10	90110–06040	BOLT, HEXAGON SOCKET HEAD	1	1				
11	90119–08851	BOLT, WITH WASHER	2	2				
12	9572R–08300	NUT, FLANGE	3	3				
13	F3J–6150F–00	SHIFT ARM ASSY	1	1				
14	F3J–6150D–00	ROD ASSY 2	1	1				

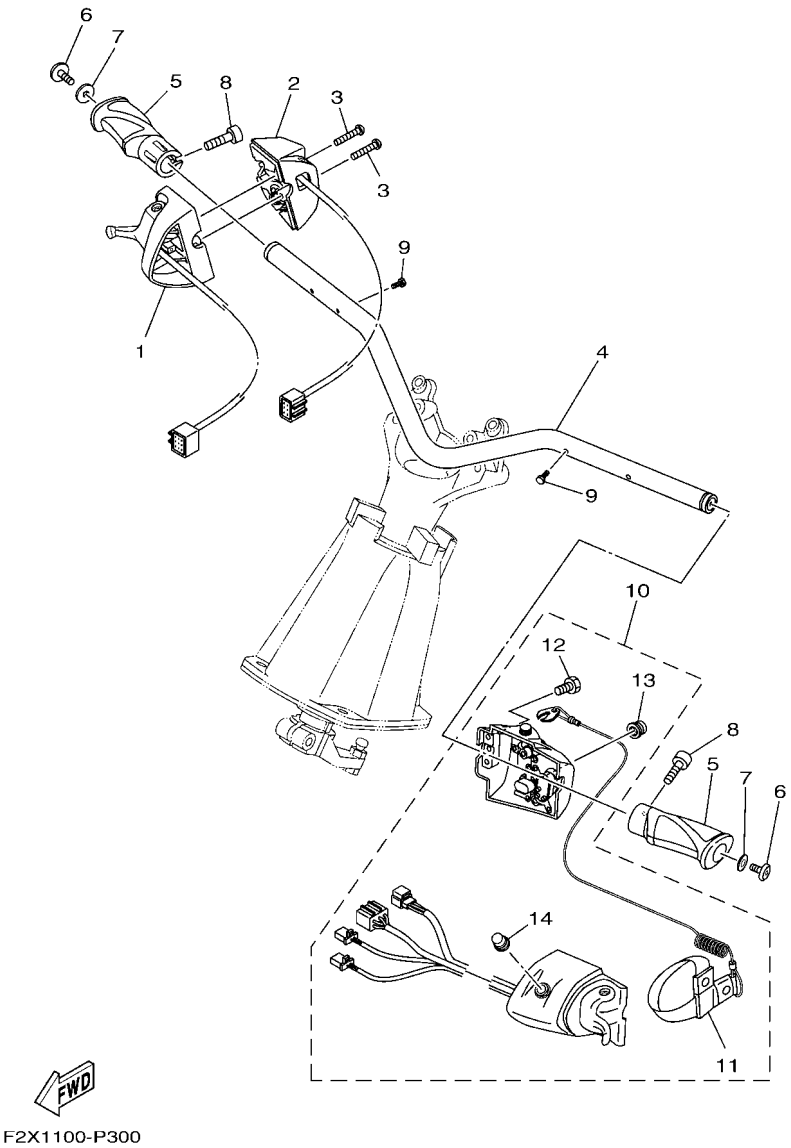

FIG. 33 STEERING 1

REF. NO.	PART NO.	DESCRIPTION	F4E3	F4E4				REMARKS
1	6CS–14305–10	THROTTLE LEVER COMP	1	1				
2	6CS–81860–00	SWITCH ASSY	1	1				
3	6CS–6725F–00	BOLT, THROTTLE	2	2				
4	F2X–U1552–00	HANDLE	1	1				
5	F2S–U155D–02	GRIP, HANDLE	2	2				
6	90110–06382	BOLT, HEXAGON SOCKET HEAD	2	2				
7	90201–068G0	WASHER, PLATE	2	2				
8	F2S–U1516–00	BOLT	2	2				
9	91380–04030	BOLT	2	2				
10	F2X–68310–00	SWITCH BOX ASSY	1	1				
11	EW2–68348–00	.LANYARD, STOP SWITCH	1	1				
12	6CS–6725F–00	.BOLT, THROTTLE	4	4				
13	FK7–68312–02	.STOP BUTTON COMP	1	1				
14	FK7–68313–02	.START BUTTON COMP.	1	1				

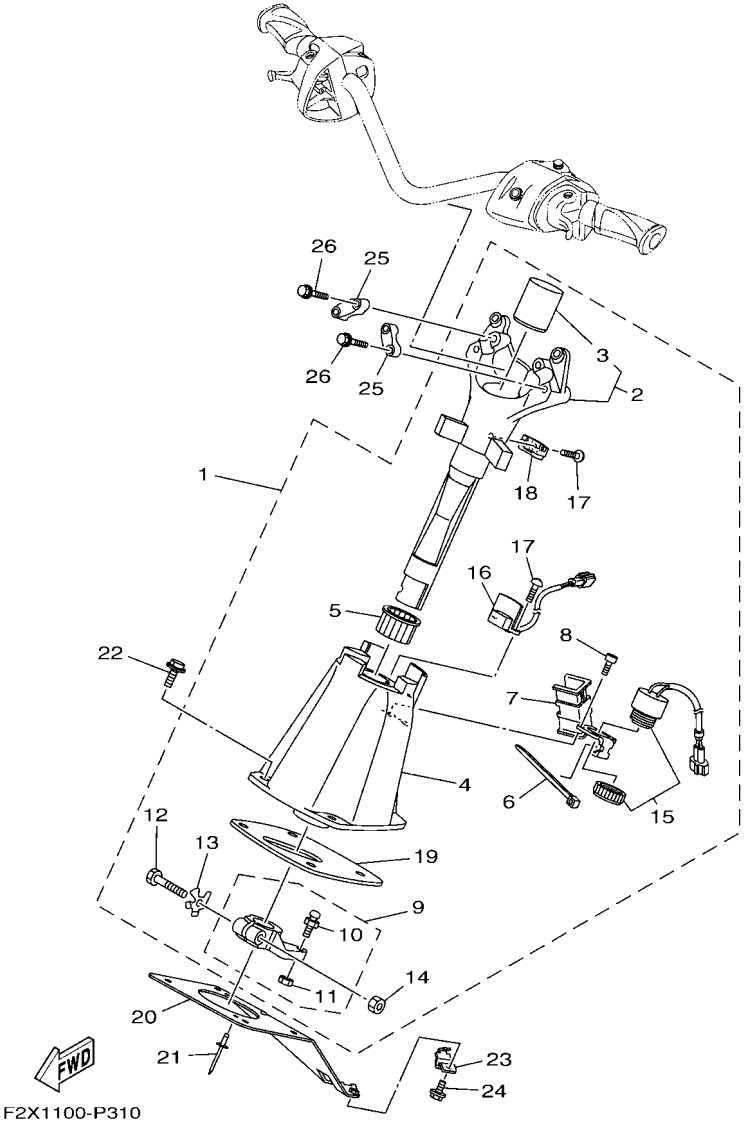

FIG. 34 STEERING 2

REF. NO.	PART NO.	DESCRIPTION	F4E3	F4E4				REMARKS
1	F2X–61400–00	STEERING MASTER ASSY	1	1				
2	F2X–67410–00	.SHAFT ASSY	1	1				
3	F2X–61435–00	..SEAL, PIPE 30	1	1				
4	F2X–6152M–00	.HOUSING ASSY	1	1				
5	F1K–6134M–00	.BUSH	1	1				
6	703–82591–00	.BAND	1	1				
7	F2X–6146H–00	.SPACER, BRKT.	1	1				
8	F1B–613C1–00	.SCREW	2	2				
9	F1K–6153R–00	.ARM ASSY.	1	1				
10	EU0–61461–02	..STUD, JOINT BALL	1	1				
11	95720–06300	..NUT, SELF-LOCKING	1	1				
12	F1K–61355–00	.BOLT	1	1				
13	F1K–6142B–00	.PLATE, RETAINING	1	1				
14	95720–08300	.NUT, SELF-LOCKING	1	1				
15	F1S–68341–00	.BUZZER	1	1				
16	F2X–6838B–00	.SENSOR, MAGNET	1	1				
17	F2X–613C1–00	.SCREW	3	3				
18	F2X–6838C–00	.MAGNET	1	1				
19	F1K–6143C–00	.SEAL, RUBBER	1	1				
20	F1K–U1467–01	BRACKET,STOPPER CABLE	1	1				
21	90267–489U2	RIVET, BLIND	2	2				
22	90119–08836	BOLT, WITH WASHER	4	4				
23	F1K–U1468–03	STOPPER, CABLE	1	1				
24	90119–069UH	BOLT, WITH WASHER	1	1				
25	EU0–23814–31	HOLDER, HANDLE UPPER	2	2				
26	90119–08827	BOLT, WITH WASHER	4	4				

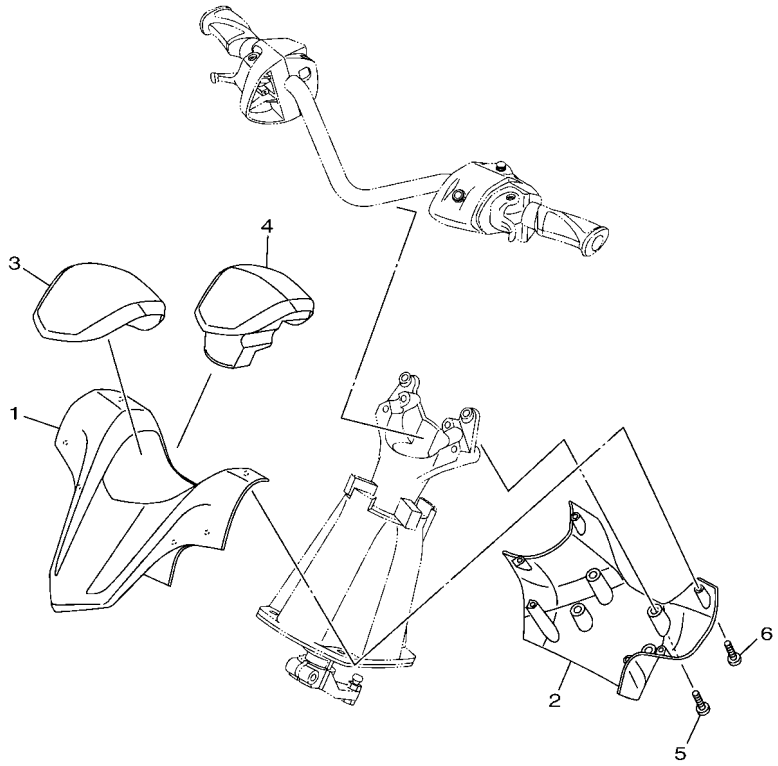

F2X1100-P320

FIG. 35 STEERING 3

REF. NO.	PART NO.	DESCRIPTION	F4E3	F4E4				REMARKS
1	F2X–U143D–10	PAD, STEERING 1	1	1				
2	F2X–U143E–10	PAD, STEERING 2	1	1				
3	F2X–U142D–20	COVER, PAD	1	1				
4	F2X–U156E–00	PAD 1	1	1				
5	90154–06017	SCREW, BINDING	4	4				
6	90149–05903	SCREW	6	6				

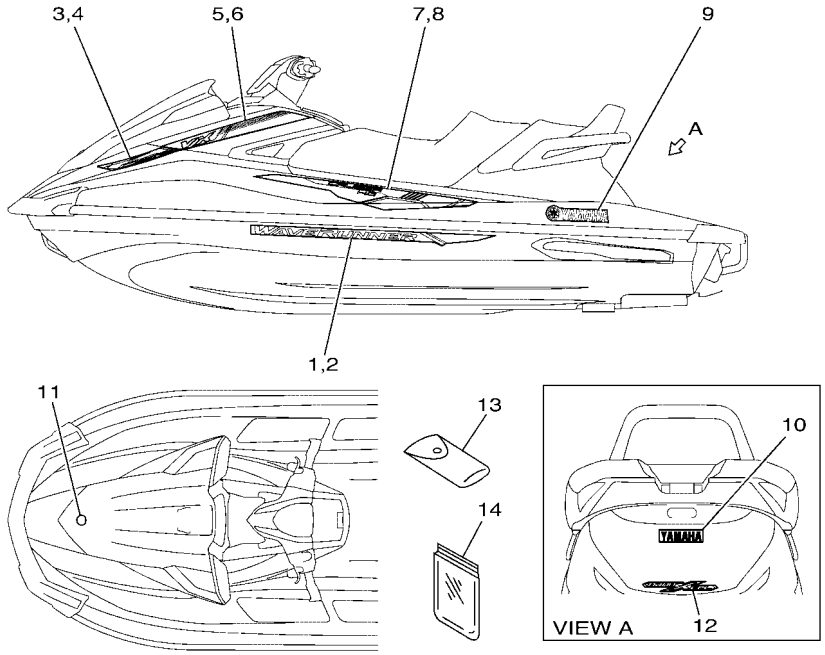

F4E3100-S360

FIG. 36 GRAPHICS

REF. NO.	PART NO.	DESCRIPTION	F4E3	F4E4				REMARKS
1	F4E–U417B–10	GRAPHIC 1 LH	1	1				FOR GRAY
	F4E–U417B–20	GRAPHIC 1 LH	1	1				FOR WHITE
2	F4E–U417C–10	GRAPHIC 2 RH	1	1				FOR GRAY
	F4E–U417C–20	GRAPHIC 2 RH	1	1				FOR WHITE
3	F4E–U417D–10	GRAPHIC 3 LH	1	1				FOR GRAY
	F4E–U417D–20	GRAPHIC 3 LH	1	1				FOR WHITE
4	F4E–U417E–10	GRAPHIC 4 RH	1	1				FOR GRAY
	F4E–U417E–20	GRAPHIC 4 RH	1	1				FOR WHITE
5	F4E–U417F–10	GRAPHIC 5 LH	1	1				FOR GRAY
	F4E–U417F–20	GRAPHIC 5 LH	1	1				FOR WHITE
6	F4E–U417G–10	GRAPHIC 6 RH	1	1				FOR GRAY
	F4E–U417G–20	GRAPHIC 6 RH	1	1				FOR WHITE
7	F4E–U417H–10	GRAPHIC 7 LH	1	1				FOR GRAY
	F4E–U417H–20	GRAPHIC 7 LH	1	1				FOR WHITE
8	F4E–U417J–10	GRAPHIC 8 RH	1	1				FOR GRAY
	F4E–U417J–20	GRAPHIC 8 RH	1	1				FOR WHITE
9	F2P–U411C–10	EMBLEM, YAMAHA	2	2				FOR GRAY
	F2N–U411C–00	EMBLEM, YAMAHA	2	2				FOR WHITE
10	F2P–U4114–10	MARK, YAMAHA A	1	1				FOR GRAY
	F1B–U411C–02	EMBLEM, YAMAHA	1	1				FOR WHITE
11	F2S–6411H–00	EMBLEM, TUNING FORK	1	1				
12	F1W–U4121–00	EMBLEM A	1	1				
13	F1B–65986–13	TOOL SET	1	1				
14	EU0–65901–02	TOOL BAG	1	1				

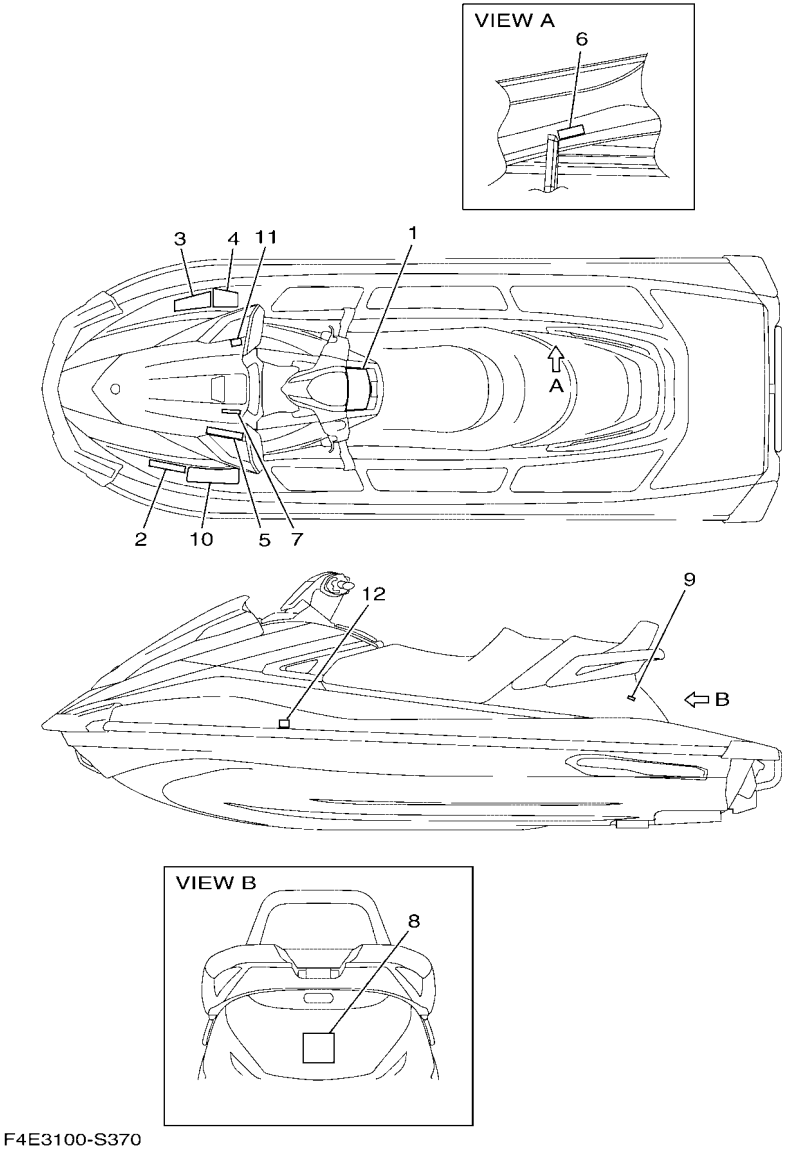

F4E3100-S370

FIG. 37 IMPORTANT LABELS

REF. NO.	PART NO.	DESCRIPTION	F4E3	F4E4				REMARKS
1	F2X–U41B1–10	LABEL, WARNING UNIFORM 1	1	1				
2	F1B–U41B1–21	LABEL, WARNING UNIFORM 1	1	1				FOR GRAY
	F2S–U41B1–20	LABEL, WARNING UNIFORM 1	1	1				FOR WHITE
3	F1B–U41B1–31	LABEL, WARNING UNIFORM 1	1	1				FOR GRAY
	F2S–U41B1–30	LABEL, WARNING UNIFORM 1	1	1				FOR WHITE
4	F1B–U41B2–01	LABEL, WARNING UNIFORM 2	1	1				FOR GRAY
	F0M–U41B2–11	LABEL, WARNING UNIFORM 2	1	1				FOR WHITE
5	F1S–U415B–11	LABEL, WARNING(FUEL)	1	1				FOR GRAY
	F1B–U415B–11	LABEL, WARNING(FUEL)	1	1				FOR WHITE
6	F0V–U41DB–12	LABEL, WARNING BATTERY	1	1				
7	F1B–U41F5–21	LABEL, FIRE EXTINGUISHER 1	1	1				
8	F1S–U41E1–11	LABEL, SET 1	1	1				FOR GRAY
	F2S–U41E1–10	LABEL, SET 1	1	1				FOR WHITE
9	F1S–U419E–01	LABEL 4	1					FOR GRAY CAN
	GJ3–U419E–00	LABEL 4	1					FOR WHITE CAN
10	GP8–U416H–01	LABEL,WARNING(FRANCE)		1				FOR GRAY EUR
	GJ3–U416H–01	LABEL,WARNING(FRANCE)		1				FOR WHITE EUR
11	F4G–U413P–10	LABEL, BUILDERS PLATE		1				FOR EUR
12	B16–F811S–00	PLATE,RUS		1				FOR EUR

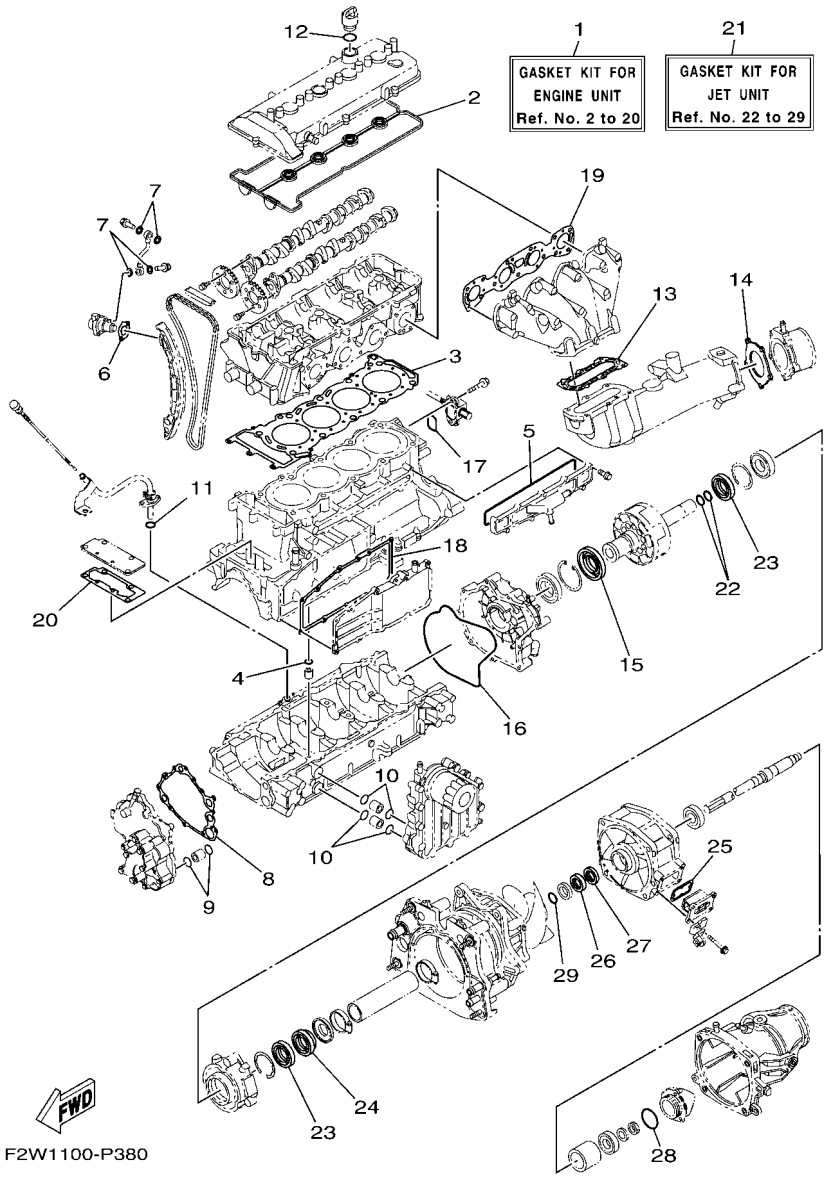

FIG. 38 REPAIR KIT 1

REF. NO.	PART NO.	DESCRIPTION	F4E3	F4E4				REMARKS
1	6CR–W0001–01	GASKET KIT FOR ENGINE UNIT	1	1				
2	6BH–11193–00	.GASKET, HEAD COVER 1	1	1				
3	6BH–11181–00	.GASKET, CYLINDER HEAD 1	1	1				
4	93210–11453	.O-RING	1	1				
5	6CS–12517–00	.GASKET, WATER INLET	1	1				
6	6S5–121E2–00	.GASKET	1	1				
7	90430–10007	.GASKET	4	4				
8	6S5–13563–00	.GASKET	1	1				
9	93210–21631	.O-RING	2	2				
10	93210–18322	.O-RING	4	4				
11	93210–12016	.O-RING	1	1				
12	93210–24M79	.O-RING	1	1				
13	6S5–14739–00	.GASKET, MUFFLER DAMPER 1	1	1				
14	6BH–14749–00	.GASKET, MUFFLER DAMPER 2	1	1				
15	6S5–81167–10	.OIL SEAL	1	1				
16	6S5–81168–00	.O-RING	1	1				
17	93210–32172	.O-RING	1	1				
18	6BH–13557–00	.GASKET	1	1				
19	6BH–14613–00	.GASKET, EXHAUST PIPE	1	1				
20	6BH–1131B–00	.GASKET, COVER	1	1				
21	6EW–W0001–20	GASKET KIT FOR JET UNIT	1	1				
22	93210–22MF1	.O-RING	2	2				
23	93102–29008	.OIL SEAL	2	2				
24	93102–29009	.OIL SEAL	1	1				
25	66V–42414–00	.O-RING	1	1				
26	93102–31009	.OIL SEAL	1	1				
27	93101–31001	.OIL SEAL	1	1				

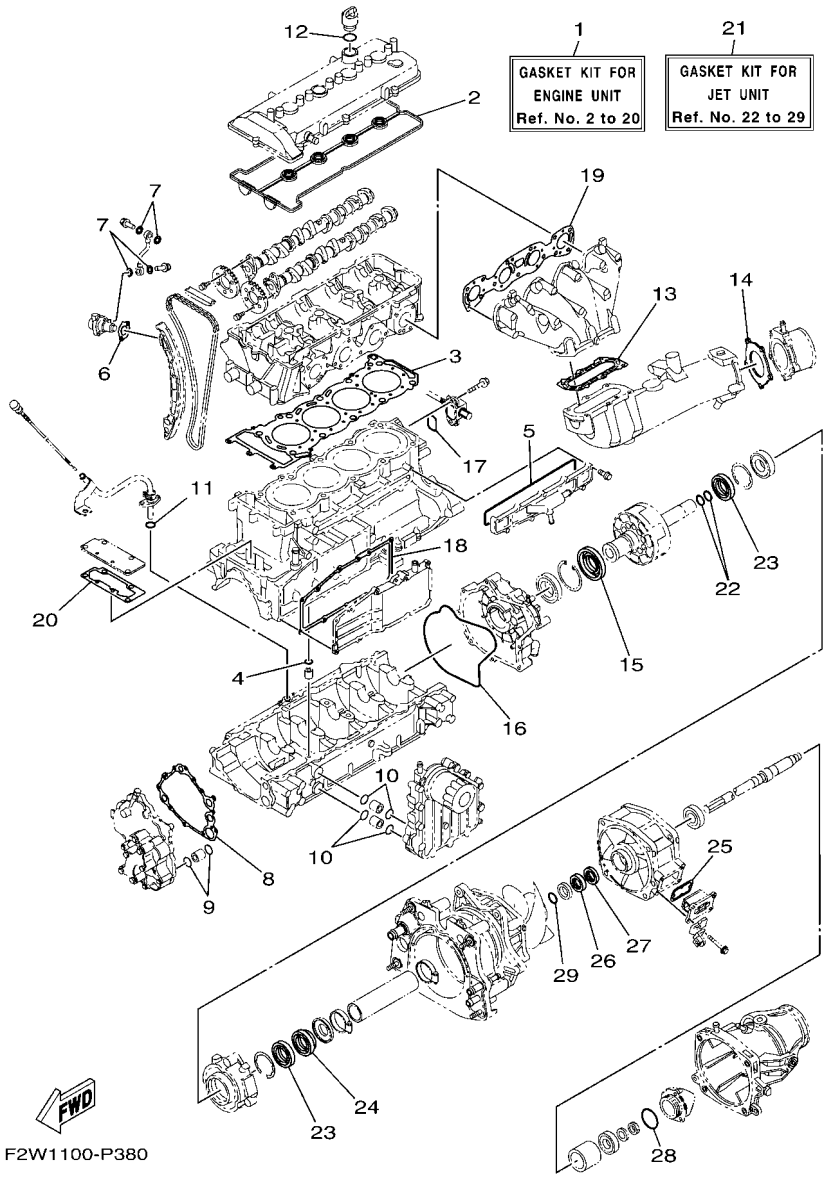

FIG. 38 REPAIR KIT 1

REF. NO.	PART NO.	DESCRIPTION	F4E3	F4E4				REMARKS
28	93210–54010	.O-RING	1	1				
29	93210–30611	.O-RING	1	1				

PART NO.	REF. NO.
6BH–11102–11	2 – 2
6BH–11119–00	2 – 14
6BH–1111E–00	2 – 12
6S5–11133–10	2 – 3
6S5–11166–10	11 – 1
6S5–11167–10	11 – 5
6BH–11181–00	2 – 11
	38 – 3
6BH–11191–20	1 – 1
6BH–11193–00	1 – 3
	38 – 2
69J–11301–10	3 – 9
6BH–1131B–00	3 – 28
	38 – 20
6BH–1131C–00	3 – 27
6S5–1131M–10–8P	3 – 17
68V–11325–02	3 – 10
67F–11328–00	3 – 11
6S5–11377–00	3 – 16
6ET–11411–00	4 – 1
6S5–11416–00	4 – 2
6S5–11416–10	4 – 2
6S5–11416–20	4 – 2
6S5–11416–30	4 – 2
6S5–11416–40	4 – 2
6S5–11459–01	4 – 14
6S5–11603–00	4 – 4
6BH–11631–00–B0	4 – 3
6S5–11633–00	4 – 5
6BH–11650–10	4 – 7
6S5–11654–10	4 – 8
6S5–11656–40	4 – 9
6S5–11656–50	4 – 9
6S5–11656–60	4 – 9
6S5–11656–70	4 – 9
6S5–12111–00	5 – 5
6S5–12113–00	5 – 8
6S5–12116–00	5 – 7
6S5–12117–00	5 – 9
3LD–12118–00	5 – 10
51Y–12119–00	5 – 11
6S5–12121–00	5 – 6
6S5–12153–00	5 – 13
3LD–12168–00	5 – 12
3LD–12168–20	5 – 12
3LD–12168–40	5 – 12
3LD–12168–60	5 – 12
3LD–12168–80	5 – 12

PART NO.	REF. NO.
3LD–12168–A0	5 – 12
3LD–12168–F0	5 – 12
3LD–12168–H1	5 – 12
3LD–12168–K1	5 – 12
3LD–12168–M1	5 – 12
3LD–12168–R1	5 – 12
3LD–12168–U1	5 – 12
3LD–12168–W1	5 – 12
3LD–12168–Y1	5 – 12
3LD–12169–11	5 – 12
3LD–12169–31	5 – 12
3LD–12169–50	5 – 12
3LD–12169–70	5 – 12
3LD–12169–90	5 – 12
3LD–12169–E0	5 – 12
3LD–12169–G0	5 – 12
3LD–12169–J0	5 – 12
3LD–12169–L0	5 – 12
6BH–12171–10	5 – 1
6ET–12176–00	5 – 3
6BH–12181–10	5 – 2
6S5–121E2–00	5 – 19
	38 – 6
6S5–12210–01	5 – 18
6S5–12228–01	2 – 7
6BH–12241–00	5 – 25
6ET–12251–00	5 – 24
6ET–12252–00	5 – 15
6BH–12279–00	5 – 16
6S5–12289–00	4 – 11
6D3–12411–00	2 – 16
6BH–12413–00	2 – 17
6S5–1243E–01	13 – 11
60E–12443–00	13 – 8
6BH–1244H–00	13 – 22
6CS–12469–A0	3 – 21
6CS–12517–00	3 – 22
	38 – 5
6BH–12577–00	13 – 27
6S5–12578–00	2 – 19
6S5–12579–00	13 – 29
63M–12580–00	13 – 5
60E–12581–00	13 – 4
6BH–12584–00	13 – 15
6CN–12588–00	13 – 24
6S5–12589–01	13 – 20
6S5–12858–00	10 – 2
6CS–12880–00	6 – 5

PART NO.	REF. NO.
6S5–1310A–25	9 – 1
6BH–1319K–00	3 – 34
6BH–1319K–00	8 – 1
6S5–13317–10	9 – 4
6S5–13337–10	3 – 24
6S5–13405–11	9 – 2
6S5–13418–00	5 – 21
69J–13440–03	10 – 1
60E–13446–00	10 – 12
6S5–13446–10	8 – 5
6BH–13470–21	10 – 3
6S5–13477–00	9 – 3
6BH–13532–00	6 – 20
6BH–13556–00	10 – 4
8FP–13556–10	6 – 14
6BH–13557–00	3 – 18
	38 – 18
6S5–13563–00	8 – 2
	38 – 8
6BH–13641–10	6 – 2
6BH–13750–01	6 – 1
6S5–13761–10	6 – 12
6S5–13907–02	22 – 1
6BH–14126–00	6 – 4
6BH–14156–00	6 – 3
6CR–14163–00	6 – 11
68V–1416A–00	6 – 13
6S5–14285–00	6 – 17
6CN–14294–10	6 – 22
6CS–14305–10	33 – 1
6BH–14445–00	6 – 19
6CS–14445–00	6 – 30
6CS–14446–00	6 – 7
6D3–1444B–00	6 – 15
6S5–14457–00	6 – 18
6CR–14536–00	6 – 10
6CR–14572–00	6 – 29
6BH–14613–00	12 – 1
	38 – 19
6BH–14711–10	12 – 2
6BH–14721–10	12 – 6
6S5–14739–00	12 – 7
	38 – 13
6BH–14749–00	12 – 14
	38 – 14
6CS–1475A–00	12 – 18
6S5–14771–00–94	12 – 11
6BH–14784–01–94	12 – 15

PART NO.	REF. NO.
6CR–15100–11	3 – 1
6ET–15362–00	3 – 31
6S5–15363–00	1 – 10
6S5–15486–10	9 – 5
5EL–15511–00	19 – 6
6S5–15515–00	18 – 3
6S5–15517–00	18 – 5
6S5–15521–00	18 – 4
6S5–15590–00	18 – 1
6S5–17031–01	4 – 16
6S5–17525–01	4 – 13
6S5–17572–01	4 – 10
6BH–17586–11	4 – 15
EU0–23814–31	34 – 25
6S5–24300–01	6 – 21
70R–24489–00	30 – 4
70R–24543–00	30 – 3
6EX–2812A–00	20 – 17
6BH–41661–00–94	23 – 4
6BH–41662–00–94	23 – 5
66V–42414–00	14 – 9
	38 – 25
67X–44517–10	23 – 1
663–45119–00	15 – 11
6S5–45332–00	15 – 4
6S5–45511–00	14 – 16
6S5–45593–00	15 – 12
6ET–45613–00	15 – 9
6S5–45813–01–94	4 – 12
6BH–4581J–00	15 – 1
68N–5112T–00	26 – 3
66V–51312–01	14 – 4
6S5–51315–02	14 – 7
6S5–51323–00	15 – 2
6BH–51348–01	14 – 23
6S5–52358–00	16 – 8
F1K–6134M–00	34 – 5
F1K–61355–00	34 – 12
F1B–613C1–00	34 – 8
F2X–613C1–00	34 – 17
F2X–61400–00	34 – 1
F2X–6140B–00	32 – 8
F1K–6142B–00	34 – 13
F2X–61435–00	34 – 3
F1B–61438–00	32 – 2
F1K–6143C–00	34 – 19
F2N–61460–00	32 – 5
EU0–61461–02	34 – 10

PART NO.	REF. NO.
F1B–61461–02	32 – 4
F2X–6146H–00	34 – 7
F2N–61481–00	32 – 1
F3J–6150D–00	32 – 14
F3J–6150F–00	32 – 13
F1B–6151S–00	32 – 3
F2X–6152M–00	34 – 4
F1K–6153R–00	34 – 9
F1K–61624–00	26 – 23
F0X–61637–00	26 – 26
EU0–61652–00	13 – 10
	26 – 8
F0X–61652–00	26 – 27
EW2–62142–00	30 – 2
F1G–62149–00	30 – 8
F2F–6214A–00	30 – 1
GP7–62159–02	30 – 6
GJ3–6215F–00	22 – 17
F2S–6411H–00	36 – 11
GA7–65772–00	31 – 4
EU0–65901–02	36 – 14
F1B–65986–13	36 – 13
6CS–6725F–00	33 – 3
	33 – 12
F2X–67410–00	34 – 2
F2S–67743–00	30 – 39
F1B–67747–00	30 – 17
EU0–67767–31	30 – 30
EW2–67821–00	31 – 3
F2N–67823–10	24 – 21
	24 – 31
F4E–6820A–01	22 – 19
GU2–6822E–01	22 – 21
6S5–682E0–00	22 – 2
F2X–68310–00	33 – 10
FK7–68312–02	33 – 13
FK7–68313–02	33 – 14
F1S–68341–00	34 – 15
EW2–68348–00	33 – 11
F2X–6838B–00	34 – 16
F2X–6838C–00	34 – 18
6S5–81167–10	18 – 13
	38 – 15
6S5–81168–00	18 – 17
	38 – 16
6S5–81315–00	21 – 21
6S5–81328–00	18 – 18
6S5–81337–20	18 – 11

PART NO.	REF. NO.
6S5–81364–10	18 – 24
6S5–81410–11	18 – 7
6S5–81450–01	18 – 6
6S5–81800–00	19 – 1
6S5–81810–00	19 – 13
6S5–81820–00	19 – 12
6S5–81826–00	19 – 10
6S5–81830–00	19 – 3
6S5–81840–00	19 – 8
11H–81844–00	19 – 2
4G0–81844–00	19 – 4
5EL–81845–00	19 – 11
6CS–81845–00	20 – 3
3TB–81847–00	19 – 9
1J7–81847–60	19 – 5
5A8–81850–10	19 – 14
6CS–81860–00	33 – 2
1B7–81940–00	20 – 29
6S5–81942–11	20 – 4
6CS–81953–00	20 – 33
6EX–8195A–00	20 – 16
6S5–81960–11	21 – 1
6S5–81972–01–94	21 – 3
6S5–81975–00	21 – 2
EU0–82110–09	22 – 4
6CS–82115–00	20 – 27
6S5–82116–00	22 – 49
6CS–82117–00	20 – 28
67F–82151–00	20 – 13
6EX–82151–00	20 – 15
67F–82151–10	20 – 14
67F–82151–30	20 – 11
67F–82151–40	20 – 12
6EX–82170–01	20 – 10
6S5–82310–00	21 – 9
61N–82317–00	1 – 7
6A0–82317–00	20 – 8
	20 – 23
6BH–82380–00	6 – 9
68V–82504–00	21 – 20
60E–82556–00	22 – 3
6CR–82560–00	21 – 15
6CS–82588–00	20 – 18
703–82591–00	34 – 6
6S5–8259E–00	20 – 25
6FG–8259L–00	20 – 35
6CS–8273J–10	21 – 22
60E–83627–00	20 – 5

PART NO.	REF. NO.
682–84385–01	13 – 9
6CS–85516–00	3 – 35
6CS–8572F–00	3 – 33
61A–85790–00	21 – 13
6AA–85790–00	21 – 26
65L–85886–00	6 – 16
60E–85896–01	21 – 18
6CR–8591A–24	20 – 6
6B6–86261–00	22 – 50
6B6–86261–10	22 – 50
6B6–86265–00	22 – 51
6B6–86265–10	22 – 51
6BH–E110M–00	1 – 4
6S5–E118E–00	1 – 6
6S5–E1328–00	1 – 5
6ET–E2289–00	15 – 13
67X–E2590–10	13 – 35
	13 – 35
6S5–E4410–01	7 – 6
6BH–E4419–00	7 – 12
6S5–E4436–00	7 – 8
6S5–E4451–00	7 – 7
6S5–E4752–00	12 – 17
B16–F811S–00	37 – 12
6S5–G2717–00	7 – 9
6CN–G4532–00	23 – 2
6CN–G4574–00	23 – 3
6CS–G5538–00	14 – 12
6CS–G5831–10	14 – 1
6EX–G6882–00	14 – 8
6BH–R1142–10	7 – 13
6EX–R1313–00	14 – 35
6ET–R1314–01	16 – 1
6EX–R1318–01	14 – 25
6AP–R1321–20	14 – 22
6AN–R1326–00	14 – 19
6EX–R1333–00	17 – 1
6ET–R1341–00	16 – 12
6EX–R1341–00	14 – 34
6ET–R1342–00	16 – 13
6S5–R1381–01	15 – 17
F2C–U1314–00	26 – 52
F2X–U135C–00	25 – 11
F2S–U13C1–00	24 – 12
	25 – 5
F2X–U13C1–00	25 – 31
F2X–U142D–20	35 – 3
F2N–U142L–00	22 – 10

PART NO.	REF. NO.
F2N–U142L–00	24 – 15
	24 – 25
	27 – 5
	27 – 6
	27 – 15
	27 – 18
	31 – 18
F2X–U143D–10	35 – 1
F2X–U143E–10	35 – 2
EU0–U1461–03	16 – 11
F1K–U1467–01	34 – 20
F1K–U1468–03	34 – 23
F2S–U1516–00	33 – 8
F2C–U151S–00	22 – 30
F2X–U1552–00	33 – 4
F2S–U155D–02	33 – 5
F2X–U156E–00	35 – 4
F2N–U1628–02	26 – 16
	29 – 35
F1B–U1653–02	26 – 22
F2X–U1708–00	24 – 34
F2X–U2127–00	28 – 1
F2N–U213G–01	28 – 5
F2X–U2157–00	28 – 2
F1S–U2280–02	26 – 36
F1S–U2285–00	26 – 37
F2X–U2511–10	27 – 1
F2X–U2512–10	27 – 7
F2X–U2519–30	27 – 8
F2X–U2519–60	27 – 8
F2X–U251D–10	27 – 13
F2X–U251E–10	27 – 16
F2N–U2663–01	25 – 6
F1W–U2664–01	29 – 3
F1K–U266B–00	25 – 27
	25 – 30
F2N–U266C–01	25 – 20
F2C–U266D–01	29 – 8
F2C–U266E–00	29 – 34
F1W–U269B–00	26 – 7
F2X–U271B–10	29 – 24
F2C–U2733–00	31 – 21
F2W–U273B–00	17 – 3
F2X–U278A–00	26 – 49
F2S–U278F–00	26 – 53
F2S–U278H–00	26 – 54
F1K–U283B–02	25 – 14
F2X–U2875–00	24 – 36

PART NO.	REF. NO.
F2X–U351H–00	27 – 22
F2X–U351J–00	27 – 23
F2X–U351J–00	27 – 24
F2X–U351M–00	27 – 25
F2X–U351N–00	27 – 26
F2X–U3581–01	27 – 21
F2X–U371A–70	29 – 1
F2X–U371A–80	29 – 1
F2X–U371B–70	29 – 2
F2X–U371B–80	29 – 2
F2X–U372A–70	29 – 6
F2X–U372A–80	29 – 6
F2X–U372B–70	29 – 7
F2X–U372B–80	29 – 7
F2S–U375E–00	29 – 16
F1W–U3768–01	25 – 4
	25 – 26
	25 – 29
F1K–U3774–00	29 – 25
GH1–U3774–00	29 – 12
F2X–U377B–00–P4	24 – 13
F2X–U377B–00–P7	24 – 13
F2X–U377C–00–P4	24 – 23
F2X–U377C–00–P7	24 – 23
F2X–U377F–00	24 – 19
F2X–U377G–00	24 – 29
F2C–U377H–00	26 – 51
F2X–U377H–00	24 – 22
F2X–U377J–00	24 – 32
F2X–U378C–00	29 – 21
F2C–U3850–00	29 – 4
F1B–U3850–02	29 – 9
F2P–U4114–10	36 – 10
F2N–U411C–00	36 – 9
F1B–U411C–02	36 – 10
F2P–U411C–10	36 – 9
F1W–U4121–00	36 – 12
F4G–U413P–10	37 – 11
F1B–U415B–11	37 – 5
F1S–U415B–11	37 – 5
GJ3–U416H–01	37 – 10
GP8–U416H–01	37 – 10
F4E–U417B–10	36 – 1
F4E–U417B–20	36 – 1
F4E–U417C–10	36 – 2
F4E–U417C–20	36 – 2
F4E–U417D–10	36 – 3
F4E–U417D–20	36 – 3

PART NO.	REF. NO.
F4E–U417E–10	36 – 4
F4E–U417E–20	36 – 4
F4E–U417F–10	36 – 5
F4E–U417F–20	36 – 5
F4E–U417G–10	36 – 6
F4E–U417G–20	36 – 6
F4E–U417H–10	36 – 7
F4E–U417H–20	36 – 7
F4E–U417J–10	36 – 8
F4E–U417J–20	36 – 8
GJ3–U419E–00	37 – 9
F1S–U419E–01	37 – 9
F2X–U41B1–10	37 – 1
F2S–U41B1–20	37 – 2
F1B–U41B1–21	37 – 2
F2S–U41B1–30	37 – 3
F1B–U41B1–31	37 – 3
F1B–U41B2–01	37 – 4
F0M–U41B2–11	37 – 4
F0V–U41DB–12	37 – 6
F2S–U41E1–10	37 – 8
F1S–U41E1–11	37 – 8
F1B–U41F5–21	37 – 7
F2N–U4261–00	31 – 12
F1K–U471E–03	25 – 13
F2X–U475B–00	25 – 19
F2S–U475F–00	25 – 23
F1W–U491K–00	27 – 2
	27 – 14
	27 – 17
GP7–U4953–10	26 – 19
	26 – 20
	26 – 21
	29 – 36
F2X–U515A–01	25 – 8
F2C–U515D–00	25 – 3
F2X–U516P–00	24 – 33
F2X–U5175–00	24 – 6
	24 – 17
	24 – 27
F2X–U517B–00–P4	25 – 1
F2X–U517B–00–P9	25 – 1
F2X–U517C–01	25 – 7
F1K–U517D–05	25 – 10
F2X–U517E–00	24 – 2
	24 – 20
	24 – 30
F2X–U517F–00	24 – 1

PART NO.	REF. NO.
F1K–U517R–01	25 – 12
F1K–U518E–04	25 – 9
F2X–U519D–00	24 – 35
F2X–U519G–00	25 – 2
F2X–U5554–00	24 – 4
F2X–U555B–00	24 – 10
F1K–U5772–04	25 – 32
	30 – 37
F2X–U590D–30	25 – 25
F2X–U590D–70	25 – 25
F2X–U590E–30	25 – 28
F2X–U590E–70	25 – 28
F2X–U591A–01	29 – 31
F2C–U591C–00	29 – 32
F2C–U591D–01	29 – 33
F2X–U5983–00	25 – 35
F1S–U725E–01	14 – 38
F2X–U72C0–00	17 – 2
6CN–U72M2–00	14 – 26
F2M–U732B–00	23 – 14
	23 – 15
F2S–U732B–00	23 – 12
EU0–U7354–00–01	23 – 11
EU0–U7354–00–03	23 – 11
EU0–U7354–00–05	23 – 11
EU0–U7354–00–10	23 – 11
EU0–U7354–00–20	23 – 11
F1B–U751G–00	31 – 16
F2C–U753B–01	31 – 19
F2S–U753C–00	31 – 7
F1W–U7550–02	31 – 1
F2S–U7555–01	31 – 6
F2C–U7557–01	17 – 12
F2C–U7564–00	31 – 20
GJ1–U7578–11	22 – 27
	22 – 28
GJ1–U7578–21	22 – 26
F1S–U757B–01	31 – 17
F2N–U758D–00	31 – 14
F2S–U759B–00	30 – 40
	30 – 41
F1K–U759C–00	25 – 34
	30 – 44
	31 – 9
F1W–U759C–01	30 – 42
	30 – 43
F1B–U761D–02	26 – 10
F2S–U7711–02	30 – 15

PART NO.	REF. NO.
F1W–U771H–00	26 – 50
6ET–U773D–00	14 – 27
6EX–U773D–00	26 – 5
6EX–U773E–00	26 – 2
F1B–U7773–00	30 – 16
F4G–U7823–10	25 – 18
F2X–U7831–00	30 – 19
GP7–U7832–01	30 – 21
F2X–U7833–00	30 – 20
GP7–U7834–10	30 – 25
GP7–U7835–00	30 – 22
GP7–U783F–00	30 – 26
F2X–U7844–01	30 – 27
F0D–U7856–10	30 – 36
F1K–U785G–00	30 – 34
F0D–U785G–10	22 – 15
GP7–U785H–00	30 – 31
F2N–U8169–00	26 – 34
	26 – 35
F2S–U8211–00	22 – 8
EU0–U821D–00	22 – 14
F1K–U8221–00	22 – 13
F1S–U8221–00	22 – 11
	30 – 45
	31 – 2
	31 – 13
EU0–U8221–30	22 – 12
F3J–U822E–00	22 – 22
F2S–U8244–00	29 – 17
F2X–U8262–00	24 – 11
F1W–U826C–00	22 – 45
F1K–U826C–03	26 – 43
F3J–U8285–00	32 – 9
F1X–U828E–01	24 – 8
F1S–U828H–01	20 – 38
F2P–U828K–00	25 – 37
F1W–U828M–00	20 – 39
	22 – 32
	22 – 37
	22 – 41
	28 – 6
	30 – 9
	30 – 12
	31 – 22
F3J–U8368–01	22 – 35
F1W–U8376–00	22 – 47
F2X–U8571–00	17 – 10
	17 – 11

PART NO.	REF. NO.
F2X–U8572–00	17 – 5
	17 – 6
F1W–U8572–01	26 – 45
F2S–U8577–00	17 – 7
F2S–U8592–00	22 – 5
F2S–U8593–00	22 – 6
F2M–U883B–00	15 – 22
F2N–U883E–00	15 – 19
F1S–U883N–01	26 – 29
F1S–U883P–01	26 – 30
F1X–U883T–01	26 – 31
F2S–U890L–04	29 – 11
F2X–U89A8–00	27 – 27
F2X–U89A9–00	27 – 28
F2X–U89AA–00	27 – 29
F2X–U89AB–00	27 – 30
F2X–U89AC–00	27 – 31
F2X–U89AD–00	27 – 32
F1S–U8K31–02	22 – 29
6CR–W0001–01	38 – 1
6EW–W0001–20	38 – 21
6BH–W009A–03–94	2 – 1
6CR–W009B–11–94	3 – 4
90105–06028	1 – 2
90105–06035	2 – 18
90105–06184	10 – 6
90105–06185	10 – 7
90105–06826	25 – 15
90105–06903	21 – 10
90105–06M07	3 – 12
90105–07006	5 – 4
90105–07009	2 – 6
90105–08021	3 – 39
90105–08054	10 – 9
90105–08169	10 – 10
90105–08170	10 – 11
90105–08243	6 – 6
90105–08249	18 – 15
90105–08860	26 – 32
	26 – 33
90105–10071	3 – 5
90109–06268	3 – 38
90109–06832	15 – 20
90109–06874	23 – 17
90109–06875	23 – 18
90109–08041	17 – 13
90110–06040	26 – 28
	32 – 10
90110–06182	3 – 25
90110–06191	27 – 3
	27 – 4
90110–06382	33 – 6
90110–06404	8 – 4
90110–06822	14 – 21
90110–08212	18 – 2
90111–06803	24 – 14
	24 – 24
90116–08032	6 – 27
90119–05803	22 – 20
90119–06048	21 – 5
90119–06078	2 – 13
90119–06832	22 – 9
90119–06880	24 – 3
90119–06882	24 – 5
	24 – 16
	24 – 26
90119–06889	14 – 10
90119–06891	15 – 16
	16 – 14
90119–06893	14 – 5
90119–069UH	34 – 24
90119–069UP	29 – 5
	29 – 10
90119–069UX	16 – 4
90119–06M35	20 – 7
	20 – 22
90119–06MA3	21 – 4
	21 – 24
90119–08034	12 – 4
	12 – 10
90119–08096	12 – 12
90119–08097	12 – 5
	12 – 9
90119–08823	17 – 4
	17 – 8
	17 – 9
	23 – 9
	23 – 10
90119–08827	34 – 26
90119–08828	29 – 18
	29 – 28
90119–08836	34 – 22
90119–08840	14 – 36
	16 – 2
90119–08851	32 – 11
90119–08859	23 – 7
90119–08859	23 – 8
90119–08861	26 – 55
	26 – 56
90119–089U7	17 – 16
90119–089UT	20 – 1
	20 – 2
90119–089UU	15 – 18
90119–08M22	7 – 3
	21 – 7
90119–10029	12 – 13
90119–10804	29 – 26
90119–10806	14 – 33
90119–10810	14 – 3
90149–05903	35 – 6
90149–06229	18 – 8
90149–10052	23 – 6
90150–05807	22 – 31
90154–06017	35 – 5
90169–049U1	30 – 23
90170–20802	14 – 18
90173–06015	20 – 20
90176–08080	6 – 28
90201–052E8	18 – 21
90201–06028	9 – 8
90201–06801	16 – 6
	16 – 9
90201–068G0	33 – 7
90201–06906	32 – 6
90201–099U3	29 – 22
90201–10801	14 – 39
90201–109U6	29 – 13
90201–12039	2 – 8
90267–329UR	30 – 24
90267–409U5	22 – 36
90267–48802	20 – 40
	25 – 36
90267–48806	28 – 3
	28 – 4
90267–48825	27 – 19
	27 – 20
90267–489U1	13 – 36
	22 – 7
	22 – 46
	22 – 48
	24 – 7
	24 – 18
	24 – 28
	25 – 33
90267–489U1	26 – 44
	30 – 38
	31 – 5
90267–489U2	23 – 13
	23 – 16
	30 – 5
	34 – 21
90267–489U6	22 – 33
	22 – 38
	22 – 42
	28 – 7
	30 – 7
	30 – 10
	30 – 13
	31 – 23
90267–489U8	26 – 11
	27 – 9
	27 – 10
90269–08801	25 – 22
	25 – 24
90280–03047	18 – 10
90387–06119	1 – 8
	20 – 9
	20 – 24
90387–06289	15 – 15
90387–06M05	18 – 22
90387–06M30	16 – 5
90387–08M06	14 – 37
90387–08M30	16 – 3
90387–08M37	7 – 2
	21 – 6
90401–10040	5 – 23
90430–06232	10 – 8
90430–06M03	3 – 13
90430–08209	9 – 10
90430–10007	5 – 22
	38 – 7
90430–12002	17 – 15
90445–14807	14 – 29
90445–16013	13 – 33
90445–18012	13 – 16
90445–20800	26 – 4
90445–20804	26 – 1
90445–21806	13 – 1
90446–20MF5	14 – 30
90447–19005	13 – 17
90447–19011	13 – 30
90447–19020	6 – 23
90447–19021	13 – 25
90447–19801	13 – 7
90447–22011	13 – 12
90447–22015	11 – 2
90447–22016	11 – 6
90447–22801	13 – 2
90447–28008	2 – 20
90450–17M17	6 – 24
90450–90002	7 – 4
	7 – 5
90450–99015	12 – 20
90450–99016	12 – 19
90450–99801	31 – 10
	31 – 15
90450–99804	31 – 11
90464–09M47	20 – 21
90464–20008	21 – 25
90464–31001	21 – 27
90464–31002	21 – 28
90464–32801	20 – 41
	22 – 23
	22 – 24
	22 – 25
	22 – 34
	22 – 39
	26 – 48
	30 – 11
	30 – 14
	31 – 24
90464–35132	13 – 19
90464–40825	7 – 14
90464–99804	28 – 8
90465–11829	14 – 31
	22 – 18
	26 – 12
	30 – 32
	30 – 33
	30 – 35
90465–13M18	21 – 12
90465–14M66	20 – 36
90467–089U1	22 – 16
90467–150A1	3 – 36
	13 – 23
90467–150A5	13 – 6
90467–160A0	13 – 18
	13 – 26
	13 – 28
	13 – 31
90467–160A0	13 – 34
90467–170A5	13 – 32
90467–17802	31 – 25
90467–18804	26 – 6
90467–190A0	11 – 3
	11 – 4
90467–200A0	26 – 14
90467–200A3	11 – 8
	13 – 3
	13 – 13
	13 – 14
	13 – 21
90467–21800	26 – 13
90467–240A0	2 – 21
	11 – 7
90467–26800	26 – 15
90480–19800	24 – 9
90480–20132	21 – 29
90480–22801	7 – 11
90480–22M15	7 – 1
	21 – 8
90601–118UF	14 – 28
	26 – 9
90601–155U4	15 – 21
	30 – 28
	30 – 29
90601–170UG	31 – 8
90601–200U2	20 – 37
	22 – 40
	22 – 43
	22 – 44
90605–502U1	25 – 21
91314–06060	9 – 7
91317–05010	18 – 20
91317–06014	18 – 19
91380–04030	33 – 9
91380–06016	21 – 19
91380–06020	18 – 23
91380–06025	5 – 20
91809–16002	2 – 4
	2 – 5
92903–06600	2 – 10
92903–08600	6 – 26
	19 – 16
9290P–20600	14 – 17
92990–06100	19 – 17
92990–10600	21 – 14
92990–12200	17 – 14

PART NO.	REF. NO.
92990–12200	26 – 25
92995–06100	20 – 31
92995–06600	20 – 32
	21 – 17
92995–08600	3 – 15
9299R–05200	26 – 39
	26 – 40
	27 – 11
	27 – 12
9299R–06200	25 – 17
9299R–08200	26 – 47
	29 – 20
	29 – 29
9299R–10200	29 – 14
	29 – 27
93101–31001	14 – 15
	38 – 27
93102–29008	15 – 5
	38 – 23
93102–29009	15 – 8
	38 – 24
93102–31009	14 – 14
	38 – 26
93210–06632	3 – 32
93210–11453	3 – 3
	38 – 4
93210–12016	3 – 37
	38 – 11
93210–18322	10 – 13
	38 – 10
93210–21631	8 – 6
	38 – 9
93210–22MF1	15 – 3
	38 – 22
93210–24M79	1 – 11
	38 – 12
93210–30611	14 – 24
	38 – 29
93210–32172	21 – 23
	38 – 17
93210–54010	14 – 20
	38 – 28
93306–00809	18 – 12
93306–20654	14 – 11
93306–20655	15 – 7
93306–30537	14 – 13
93410–12003	19 – 7
93450–24028	4 – 6
93450–66156	15 – 6
93604–10M03	3 – 8
	10 – 5
93606–12019	3 – 7
	8 – 3
	12 – 8
	14 – 6
	14 – 32
	15 – 14
93608–16M16	12 – 3
93700–06M03	15 – 10
94591–74152	5 – 14
94702–00427	21 – 11
95023–06012	6 – 31
95024–06014	3 – 19
95024–06020	3 – 20
	9 – 12
95024–06035	9 – 11
95024–08035	12 – 16
95380–06700	19 – 18
9538R–06600	16 – 7
	16 – 10
9538R–06700	32 – 7
95720–06300	34 – 11
95720–08300	34 – 14
9572R–05300	26 – 41
	26 – 42
9572R–06300	25 – 16
	30 – 18
9572R–08300	26 – 17
	26 – 18
	26 – 46
	29 – 19
	29 – 23
	29 – 30
	29 – 37
	32 – 12
9572R–10300	14 – 40
	29 – 15
95814–06012	20 – 34
95814–06016	3 – 30
95814–06030	5 – 17
95814–06035	3 – 23
95814–06070	3 – 6
95814–08020	3 – 29
	9 – 9
95817–06014	9 – 6
95824–06025	1 – 9
97013–06055	2 – 9
97013–08030	19 – 15
97013–08030	6 – 25
97095–06012	20 – 30
97095–06016	21 – 16
97095–08040	3 – 14
97513–05514	18 – 9
97513–08525	6 – 8
97513–10525	2 – 15
97595–06514	20 – 19
97780–60516	7 – 10
97780–60520	20 – 26
9788R–05025	26 – 38
99009–72500	18 – 14
99530–10114	3 – 2
	3 – 26
	18 – 16
99590–14016	14 – 2
99780–12600	26 – 24