YAMAHA

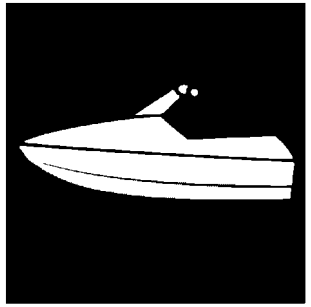

PARTS CATALOGUE

WaveRunner VX Cruiser/Deluxe

VX1050A-V (F5T6 /6EYR/6EY4)

VX1050B-V (F5T7 /6EYR/6EY4)

YAMAHA
GENUINE
Parts & Accessories

1VF5T-100E1

( )

VX1050A-V/VX1050B-V
PARTS CATALOGUE
©2019 by Yamaha Motor Co., Ltd.
1st edition, September 2019
All rights reserved.
Any reprinting or unauthorized use
without the written permission of
Yamaha Motor Co., Ltd.
is expressly prohibited.
Printed in Japan.

FOREWORD

This Parts Catalogue is related to the parts for the model(s) on the cover page. When you are ordering replacement parts, please refer to this Parts Catalogue and quote both part numbers and part names correctly.

1. Modifications or additions which have been made after the issue of the Parts Catalogue will be announced in the Parts News.
   It is advisable that you make the necessary corrections to the Parts Catalogue according to the Parts News.

2. Abbreviations
   The following abbreviations are used in this Parts Catalogue.

   "UR" Use specified parts number.

   "UN" Use as many as needed.

   "AP" Alternate Parts

   "LM" Locally Made (Parts need to be ordered locally)

   "F#" Frame No. (Applicable machine No.)

   "O/S" Over Size

3. The number of components for assembly
   - Parts, which are to be supplied in an assembly, are listed with a dot (.) in front of the part name as shown below.
   - The numeral appearing to the right of each component part indicates the quantity of parts for each assembly unit.

PART NO.	DESCRIPTION	Q'TY	REMARKS
2F5–83310–60	FRONT FLASHER LIGHT ASSY	2	
115–83311–60	.BULB (6V–18W)	1	

4. Applicable colours of graphics are represented in the "REMARKS" as shown below.

PART NO.	DESCRIPTION	Q'TY	REMARKS
2N4–24110–00–X5	FUEL TANK COMP.	2	MXR
3J1–24240–10	.GRAPHIC, FUEL TANK	1	FOR MXR

5. Note that the illustrations for reference in finding parts numbers are not to be used for assembling. When assembling, please use the applicable service manual.

6. The asterisk (*) before a reference number indicates modified items after the first edition.

7. Applicable Serial No.

Engine Serial No.

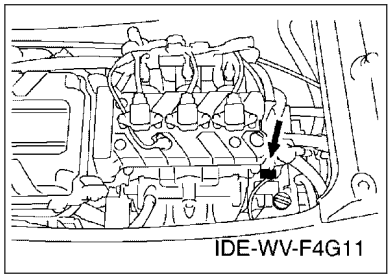

Primary Identification No.

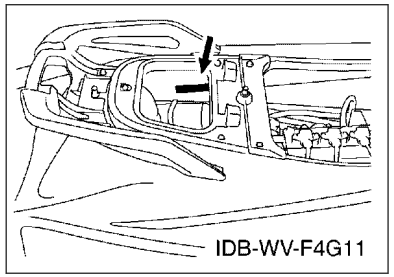

8. Applicable Colour Code (The (*) mark shows Model colour.)

Abbreviation	Colour Name	Colour Code
DPBM11(*)	DARK PURPLISH BLUE METALLIC 11	1187
LGM3(*)	LIGHT GRAY METALLIC 3	0137
RM9(*)	RED METALLIC 9	1485
SSA(*)	BLACK SOLID A	1000

9. Quantity Column Information

Column No.	Name Of Q'ty Column	Destination
1	F5T6	CANADA, EUROPE
2	F5T7	CANADA, EUROPE

10. Applicable Starting Serial No.

Engine Serial No.

Serial No.	Name Of Q'ty Column	Model Code

Primary Identification No.

Serial No.	Name Of Q'ty Column	Model Code
F5T-810861	F5T6	F5T6
F5T-810861	F5T7	F5T7

CONTENTS

CYLINDER....1
CRANKCASE.... 2
CRANKSHAFT & PISTON....4
VALVE.... 6
INTAKE....8
INTAKE 2....9
OIL PUMP....10
OIL COOLER....11
EXHAUST 1....13
EXHAUST 2....14
JET UNIT 1....16
JET UNIT 2....19
JET UNIT 3....20
GENERATOR....21
STARTING MOTOR.... 22
ELECTRICAL 1....23
ELECTRICAL 2....25
ELECTRICAL 3....26
ENGINE MOUNT....28
ENGINE HATCH 1....29
ENGINE HATCH 2....31
HULL & DECK.... 33
GUNWALE & MAT....35
VENTILATION.... 38
SEAT & UNDER LOCKER.... 39
FUEL TANK....41
EXHAUST 3....43
CONTROL CABLE.... 44
STEERING 1.... 46
STEERING 2.... 47
STEERING 3.... 48
GRAPHICS....49
IMPORTANT LABELS....51
REPAIR KIT 1....52

INDEX

NUMERICAL INDEX....53

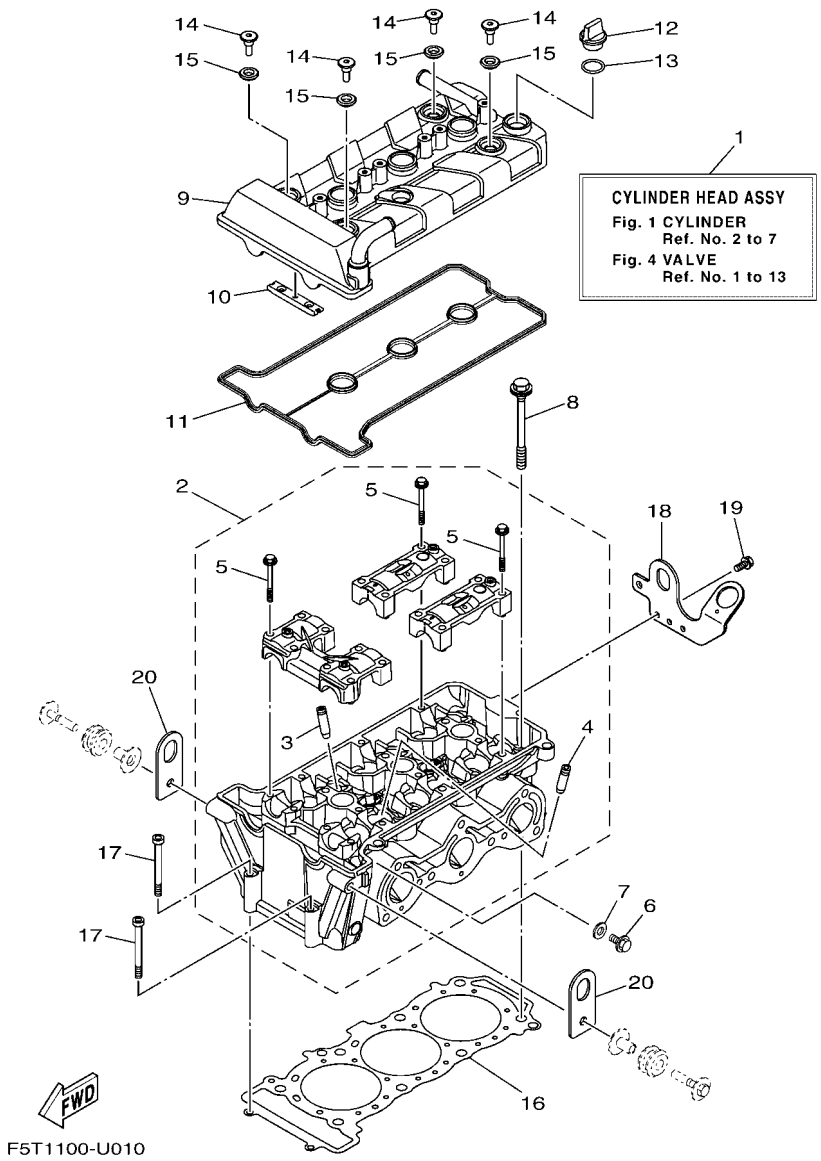

FIG. 1 CYLINDER

REF. NO.	PART NO.	DESCRIPTION	F5T6	F5T7				REMARKS
1	6EY–11110–00	CYLINDER HEAD COMPLETE	1	1				
2	6EY–11102–00	CYLINDER HEAD ASSY	1	1				
3	2C0–11133–11	.GUIDE, VALVE 1	6	6				
4	8HF–11134–10	.GUIDE, VALVE 2	6	6				
5	90105–06027	.BOLT, FLANGE	16	16				
6	95024–08012	BOLT, FLANGE (SMALL HEAD)	1	1				
7	90430–08119	GASKET	1	1				
8	90119–10004	BOLT, WITH WASHER	8	8				
9	6EY–11191–10	COVER, CYLINDER HEAD 1	1	1				
10	5BE–12241–00	GUIDE, STOPPER 2	1	1				
11	6EY–11193–00	GASKET, HEAD COVER 1	1	1				
12	3Y1–15363–10	PLUG, OIL	1	1				
13	93210–19123	O-RING	1	1				
14	90109–066F0	BOLT	4	4				
15	5VY–1111G–00	RUBBER, MOUNT 1	4	4				
16	6EY–11181–00	GASKET, CYLINDER HEAD 1	1	1				
17	91314–06065	BOLT, HEXAGON SOCKET HEAD	2	2				
18	6EY–1111E–10	HANGER, ENGINE 2	1	1				
19	90119–06078	BOLT, WITH WASHER	2	2				
20	6EY–11119–00	HANGER, ENGINE	2	2				

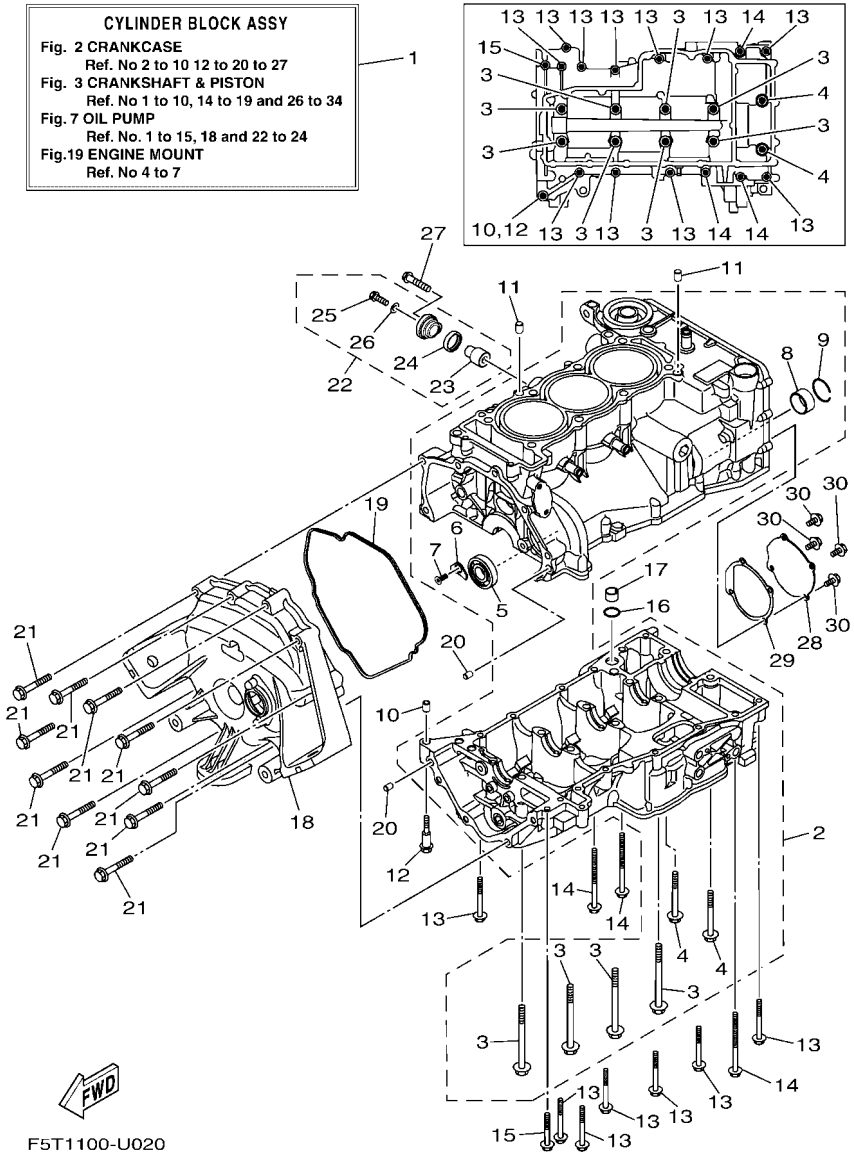

FIG. 2 CRANKCASE

REF. NO.	PART NO.	DESCRIPTION	F5T6	F5T7				REMARKS
1	6EY–W009B–01	CYLINDER BLOCK ASSY	1	1				
2	6EY–15109–09	CRANKCASE ASSY	1	1				
3	90119–09004	.BOLT, WITH WASHER	8	8				
4	95812–08070	.BOLT, FLANGE	2	2				
5	93306–30323	.BEARING	1	1				
6	4JT–15381–01	.PLATE, BEARING COVER	1	1				
7	90151–06024	.SCREW, COUNTERSUNK	1	1				
8	8ES–11428–01	.BEARING 1	1	1				
9	93450–32152	.CIRCLIP	1	1				
10	99530–10014	PIN, DOWEL	1	1				
11	99530–10114	PIN, DOWEL	2	2				
12	90109–06308	BOLT	1	1				
13	90105–06214	BOLT, FLANGE	11	11				
14	90105–06215	BOLT, FLANGE	3	3				
15	90105–06087	BOLT, FLANGE	1	1				
16	93210–17010	O-RING	1	1				
17	8ES–13284–00	PIPE	1	1				
18	6EY–15421–00	COVER, CRANKCASE 2	1	1				
19	6EY–15461–00	GASKET, CRANKCASE COVER 2	1	1				
20	99590–08012	PIN, DOWEL	2	2				
21	97513–08555	BOLT, WITH WASHER	10	10				
22	69J–11301–10	ANODE COVER ASSY	1	1				
23	68V–11325–02	.ANODE	1	1				
24	67F–11328–00	.GROMMET, ANODE	1	1				
25	90105–06M07	.BOLT, FLANGE	1	1				
26	90430–06M03	.GASKET	1	1				
27	97E95–08540	BOLT, HEXAGON W/W DEEP RECESS	1	1				

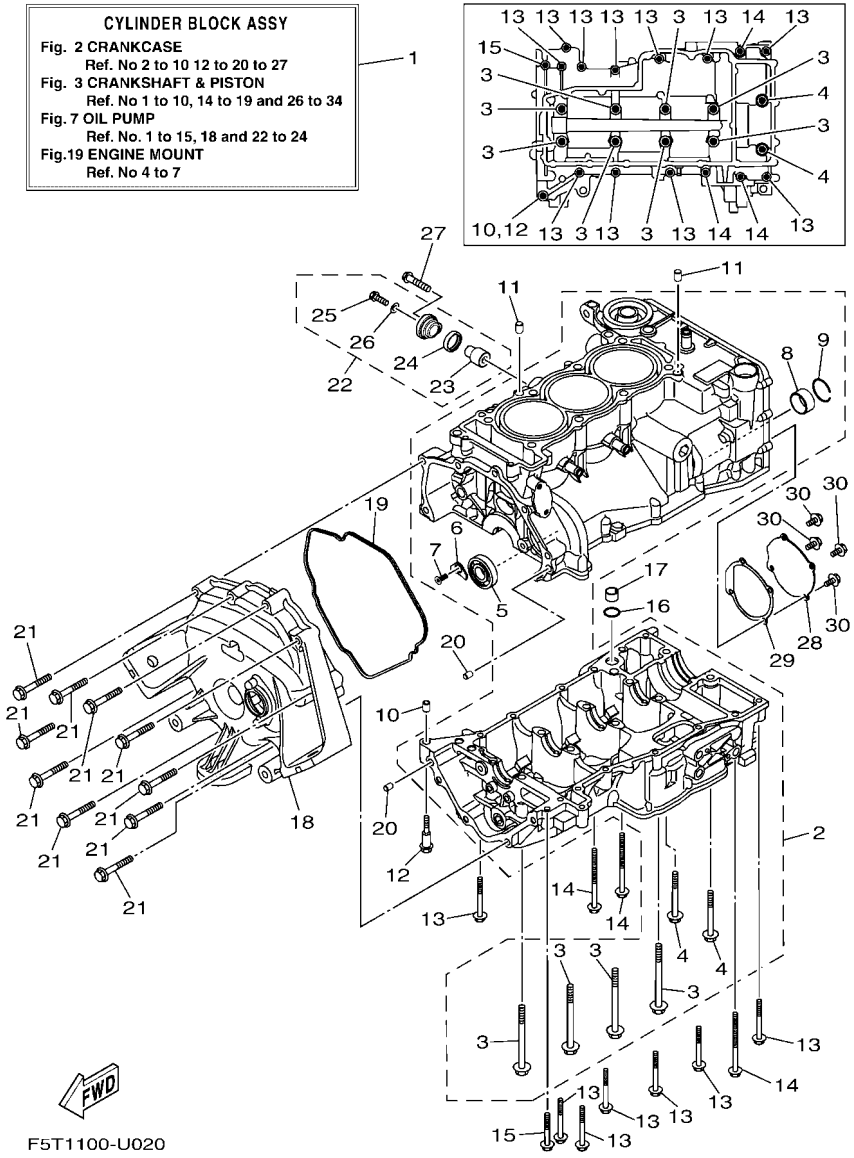

FIG. 2 CRANKCASE

REF. NO.	PART NO.	DESCRIPTION	F5T6	F5T7				REMARKS
28	6EY–15589–01	PLATE	1	1				
29	6EY–15463–01	GASKET, 2	1	1				
30	95024–06012	BOLT, FLANGE (SMALL HEAD)	4	4				

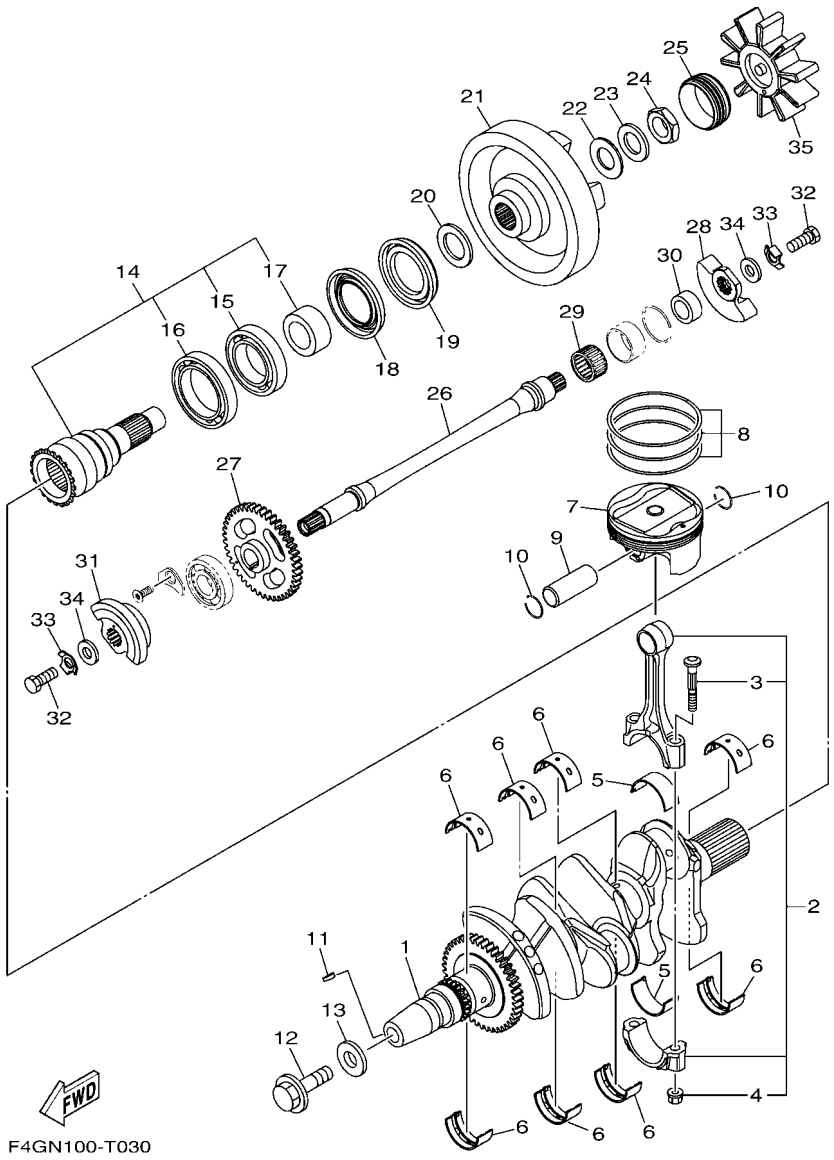

FIG. 3 CRANKSHAFT & PISTON

REF. NO.	PART NO.	DESCRIPTION	F5T6	F5T7				REMARKS
1	6EY–11400–00	CRANKSHAFT ASSY	1	1				
2	B0F–11650–00	CONNECTING ROD ASSY	3	3				
3	5JW–11654–00	.BOLT, CONNECTING ROD	2	2				
4	90179–08327	.NUT	2	2				
5	5JW–11656–00	PLANE BEARING, CONNECTING ROD	6	6				UR BLUE
	5JW–11656–10	PLANE BEARING, CONNECTING ROD	6	6				UR BLACK
	5JW–11656–20	PLANE BEARING, CONNECTING ROD	6	6				UR BROWN
	5JW–11656–30	PLANE BEARING, CONNECTING ROD	6	6				UR GREEN
	5JW–11656–40	PLANE BEARING, CONNECTING ROD	6	6				UR YELLOW
	5JW–11656–50	PLANE BEARING, CONNECTING ROD	6	6				UR PINK
6	3LD–11416–10	PLANE BEARING, CRANKSHAFT 1	8	8				UR BLACK
	3LD–11416–20	PLANE BEARING, CRANKSHAFT 1	8	8				UR BROWN
	3LD–11416–30	PLANE BEARING, CRANKSHAFT 1	8	8				UR GREEN
	3LD–11416–40	PLANE BEARING, CRANKSHAFT 1	8	8				UR YELLOW
	3LD–11416–50	PLANE BEARING, CRANKSHAFT 1	8	8				UR PINK
	3LD–11416–60	PLANE BEARING, CRANKSHAFT 1	8	8				UR RED
	3LD–11416–70	PLANE BEARING, CRANKSHAFT 1	8	8				UR WHITE
7	8KH–11631–00	PISTON (STD)	3	3				
8	8KH–11603–01	PISTON RING SET (STD)	3	3				
9	6EY–11633–00	PIN, PISTON	3	3				
10	93450–19095	CIRCLIP	6	6				
11	90280–03045	KEY, WOODRUFF	1	1				
12	90105–12101	BOLT, FLANGE	1	1				
13	90201–121H0	WASHER, PLATE	1	1				
14	6EY–11406–00	SHAFT ASSY	1	1				
15	93306–00702	.BEARING	1	1				
16	93306–90901	.BEARING	1	1				

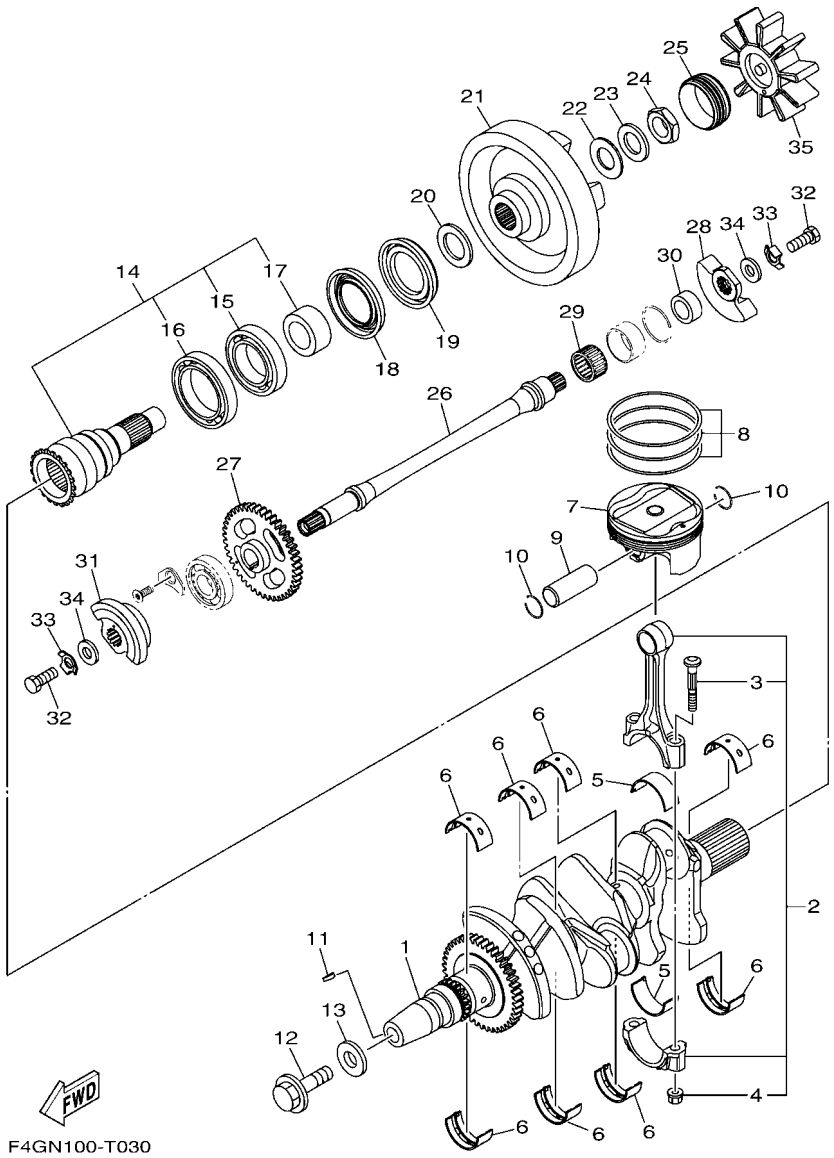

FIG. 3 CRANKSHAFT & PISTON

REF. NO.	PART NO.	DESCRIPTION	F5T6	F5T7				REMARKS
17	6EY–11917–00	.COLLAR	1	1				
18	93101–40001	OIL SEAL	1	1				
19	93101–40002	OIL SEAL	1	1				
20	6EY–11557–00	WASHER 1	1	1				
21	6EY–11571–00	FLYWHEEL	1	1				
22	90201–20030	WASHER, PLATE	1	1				
23	90208–20001	WASHER, CONICAL SPRING	1	1				
24	90179–20010	NUT	1	1				
25	6EY–45155–00	CAP	1	1				
26	2HC–11407–00	SHAFT ASSY., 2	1	1				
27	6EY–11531–00	GEAR, BALANCE WEIGHT	1	1				
28	8ES–11454–00	WEIGHT 1	1	1				
29	93310–42239	BEARING	1	1				
30	6EY–11478–00	COLLAR	1	1				
31	2HC–11464–00	WEIGHT 2	1	1				
32	97012–10025	BOLT	2	2				
33	90215–10003	WASHER, LOCK	2	2				
34	90201–10591	WASHER, PLATE	2	2				
35	6EY–4581J–00	RUBBER SHAFT COUPLING	1	1				

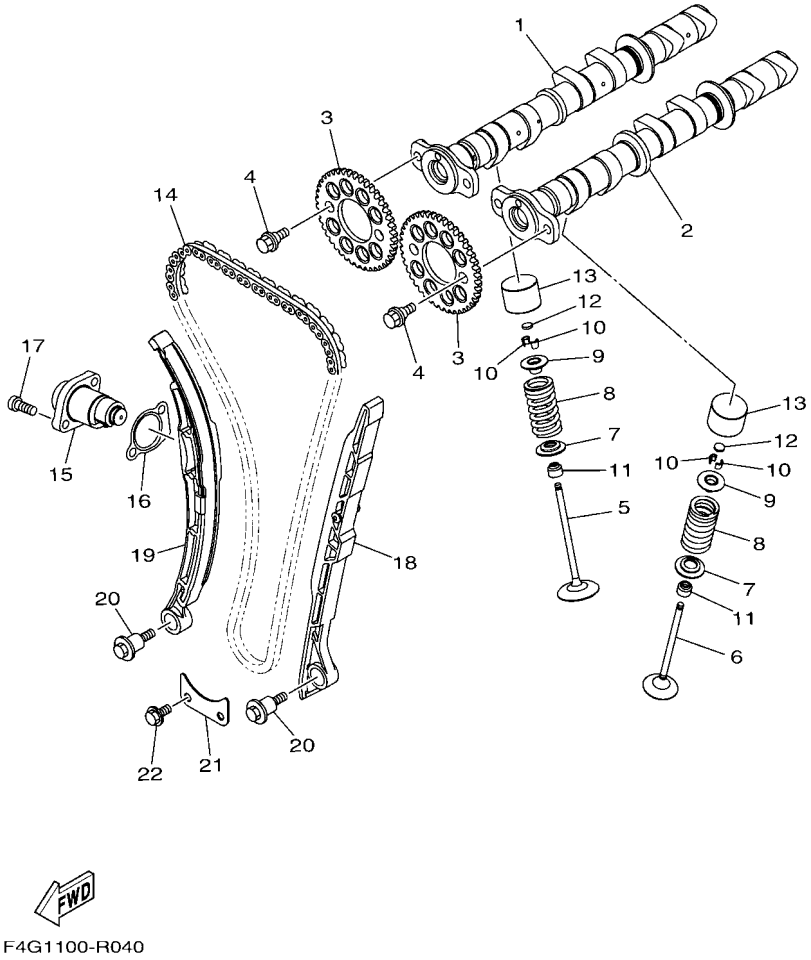

FIG. 4 VALVE

REF. NO.	PART NO.	DESCRIPTION	F5T6	F5T7				REMARKS
1	6EY–12170–00	CAMSHAFT ASSY 1	1	1				
2	6EY–12180–00	CAMSHAFT ASSY 2	1	1				
3	2HC–12176–00	SPROCKET, CAM CHAIN	2	2				
4	90105–07004	BOLT, FLANGE	4	4				
5	8GL–12111–10	VALVE, INTAKE	6	6				
6	8GL–12121–10	VALVE, EXHAUST	6	6				
7	1RC–12116–00	SEAT, VALVE SPRING	12	12				
8	8GL–12113–00	SPRING, VALVE INNER	12	12				
9	3D7–12117–00	RETAINER, VALVE SPRING	12	12				
10	1WG–12118–00	LOCK, VALVE SPRING RETAINER	24	24				
11	2HC–12119–00	SEAL, VALVE STEM	12	12				
12	1HX–12168–00	PAD, ADJUSTING 2 (1.20)	12	12				UR
	1HX–12168–20	PAD, ADJUSTING 2 (1.25)	12	12				UR
	1HX–12168–40	PAD, ADJUSTING 2 (1.30)	12	12				UR
	1HX–12168–60	PAD, ADJUSTING 2 (1.35)	12	12				UR
	1HX–12168–80	PAD, ADJUSTING 2 (1.40)	12	12				UR
	1HX–12168–A0	PAD, ADJUSTING 2 (1.45)	12	12				UR
	1HX–12168–F0	PAD, ADJUSTING 2 (1.50)	12	12				UR
	1HX–12168–H1	PAD, ADJUSTING 2 (1.55)	12	12				UR
	1HX–12168–K1	PAD, ADJUSTING 2 (1.60)	12	12				UR
	1HX–12168–M1	PAD, ADJUSTING 2 (1.65)	12	12				UR
	1HX–12168–R1	PAD, ADJUSTING 2 (1.70)	12	12				UR
	1HX–12168–U1	PAD, ADJUSTING 2 (1.75)	12	12				UR
	1HX–12168–W1	PAD, ADJUSTING 2 (1.80)	12	12				UR
	1HX–12168–Y1	PAD, ADJUSTING 2 (1.85)	12	12				UR
	1HX–12169–11	PAD, ADJUSTING 2 (1.90)	12	12				UR
	1HX–12169–31	PAD, ADJUSTING 2 (1.95)	12	12				UR

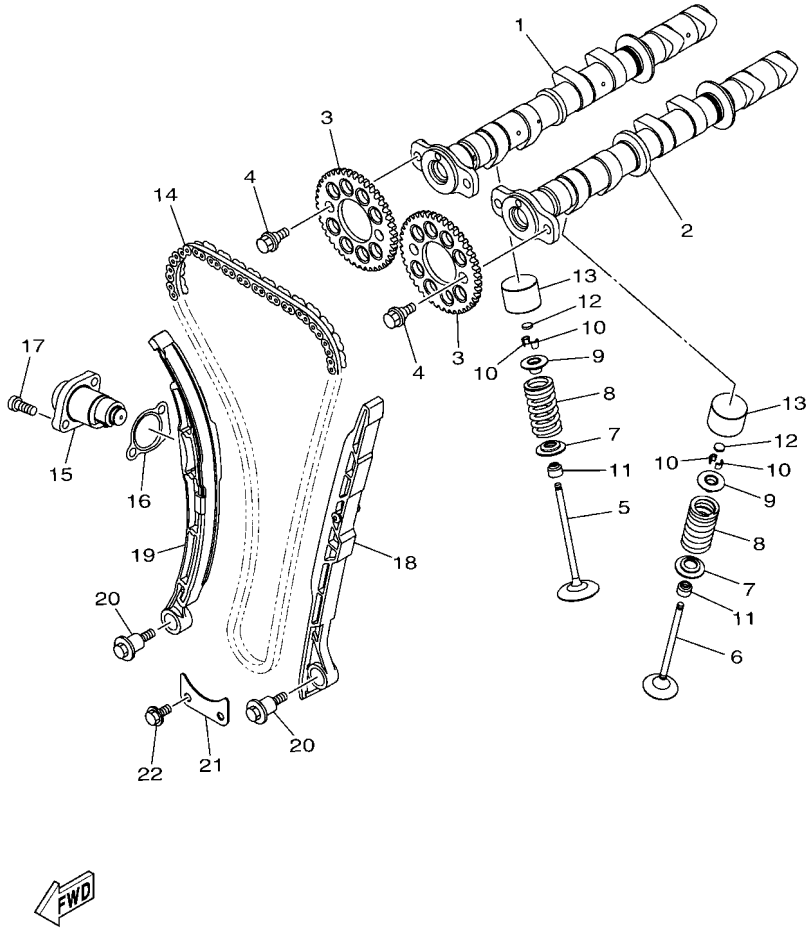

F4G1100-R040

FIG. 4 VALVE

REF. NO.	PART NO.	DESCRIPTION	F5T6	F5T7				REMARKS
12	1HX–12169–50	PAD, ADJUSTING 2 (2.00)	12	12				UR
	1HX–12169–70	PAD, ADJUSTING 2 (2.05)	12	12				UR
	1HX–12169–90	PAD, ADJUSTING 2 (2.10)	12	12				UR
	1HX–12169–E0	PAD, ADJUSTING 2 (2.15)	12	12				UR
	1HX–12169–G0	PAD, ADJUSTING 2 (2.20)	12	12				UR
	1HX–12169–J0	PAD, ADJUSTING 2 (2.25)	12	12				UR
	1HX–12169–L0	PAD, ADJUSTING 2 (2.30)	12	12				UR
	1HX–12169–N0	PAD, ADJUSTING 2 (2.35)	12	12				UR
	1HX–12169–T0	PAD, ADJUSTING 2 (2.40)	12	12				UR
13	6EY–12153–01	LIFTER, VALVE	12	12				
14	94591–57140	CHAIN (98RH2010-140M)	1	1				
15	8KH–12210–00	TENSIONER ASSY, CAM CHAIN	1	1				
16	2C0–12213–00	GASKET, TENSIONER CASE	1	1				
17	90110–06274	BOLT, HEXAGON SOCKET HEAD	2	2				
18	6EY–12251–00	DAMPER, CHAIN 1	1	1				
19	2HC–12252–00	DAMPER, CHAIN 2	1	1				
20	90109–06295	BOLT	2	2				
21	6EY–12279–00	PLATE	1	1				
22	95812–06012	BOLT, FLANGE	2	2				

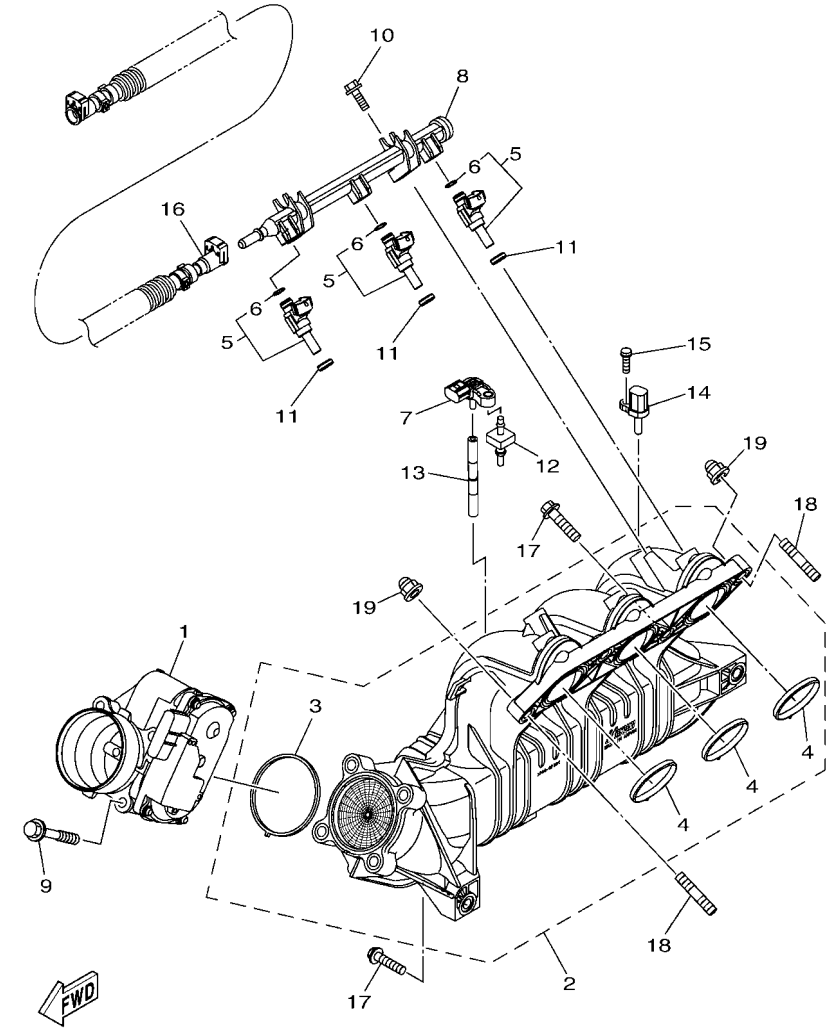

F3Y7100-T050

FIG. 5 INTAKE

REF. NO.	PART NO.	DESCRIPTION	F5T6	F5T7				REMARKS
1	6EY–13750–00	THROTTLE BODY ASSY	1	1				
2	6EY–13641–00	MANIFOLD, INTAKE 1	1	1				
3	6EY–14156–00	.GASKET, INSULATING	1	1				
4	6EY–14126–00	.GASKET	3	3				
5	2HC–13761–00	INJECTOR	3	3				
6	68V–1416A–00	.O-RING	1	1				
7	5S7–82380–00	SENSOR, PRESSURE	1	1				
8	6EY–12880–00	DELIVERY PIPE	1	1				
9	90105–08243	BOLT, FLANGE	4	4				
10	95814–06020	BOLT, FLANGE	2	2				
11	8FP–13556–10	GASKET, MANIFOLD	3	3				
12	6BH–14445–00	GROMMET	1	1				
13	6EY–13532–00	HOSE, VACUUM SENSING 3	1	1				
14	8FP–85886–00	SENSOR, AIR TEMPERATURE	1	1				
15	97702–50520	SCREW, TAPPING	1	1				
16	6EY–2450B–10	FUEL HOSE ASSY	1	1				
17	97513–08535	BOLT, WITH WASHER	4	4				
18	95612–08625	BOLT, STUD	2	2				
19	90176–08080	NUT, CROWN	2	2				

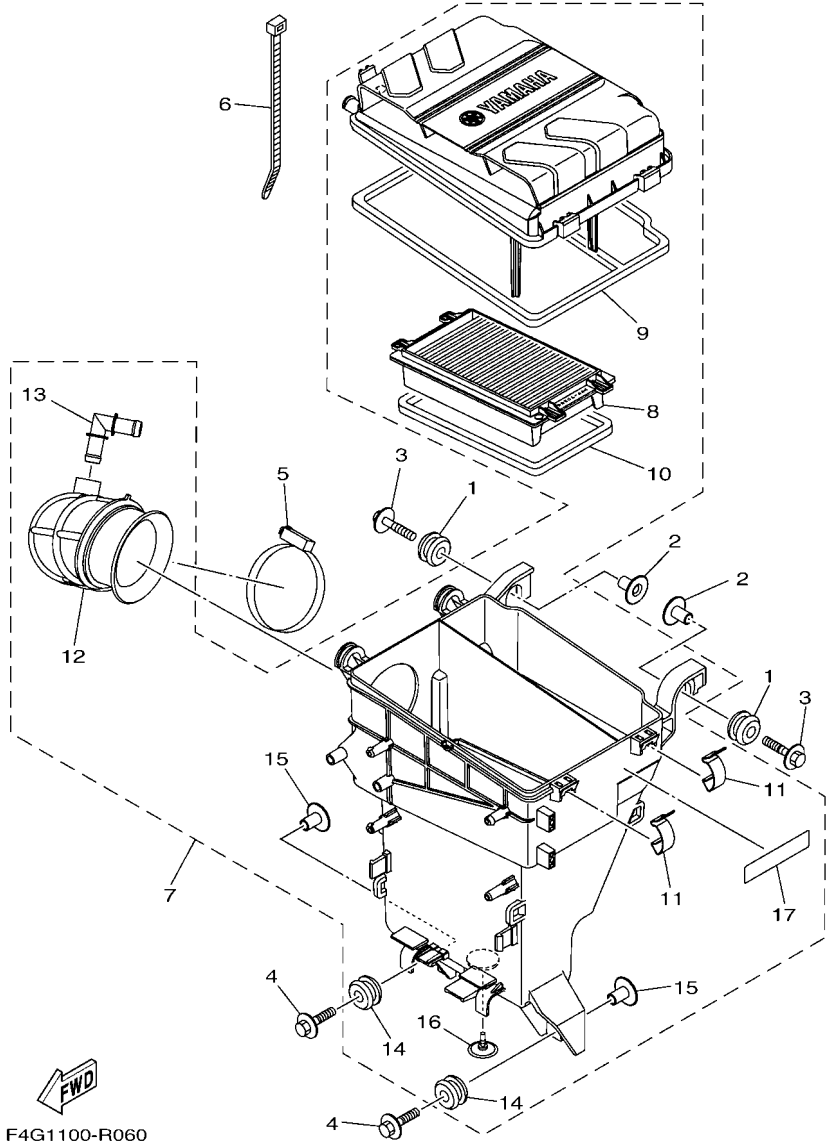

FIG. 6 INTAKE 2

REF. NO.	PART NO.	DESCRIPTION	F5T6	F5T7				REMARKS
1	90480–22M15	GROMMET	2	2				
2	90387–08M37	COLLAR	2	2				
3	90119–08169	BOLT, WITH WASHER	2	2				
4	90119–08M22	BOLT, WITH WASHER	2	2				
5	90450–90002	HOSE CLAMP ASSY	1	1				
6	90465–13M18	CLAMP	1	1				
7	6EY–14410–01	AIR CLEANER ASSY.	1	1				
8	6EY–14451–00	.ELEMENT, AIR CLEANER	1	1				
9	6EY–14462–00	.SEAL	1	1				
10	6EY–14452–00	.SEAL	1	1				
11	6EY–14436–00	.HOOK	2	2				
12	6EY–14419–00	.PIPE	1	1				
13	6EY–14485–00	.PIPE, JOINT	1	1				
14	90480–22M15	.GROMMET	2	2				
15	90387–08M37	.COLLAR	2	2				
16	6EY–14470–00	.VALVE	1	1				
17	60E–83627–00	.LABEL, CAUTION 7	1	1				

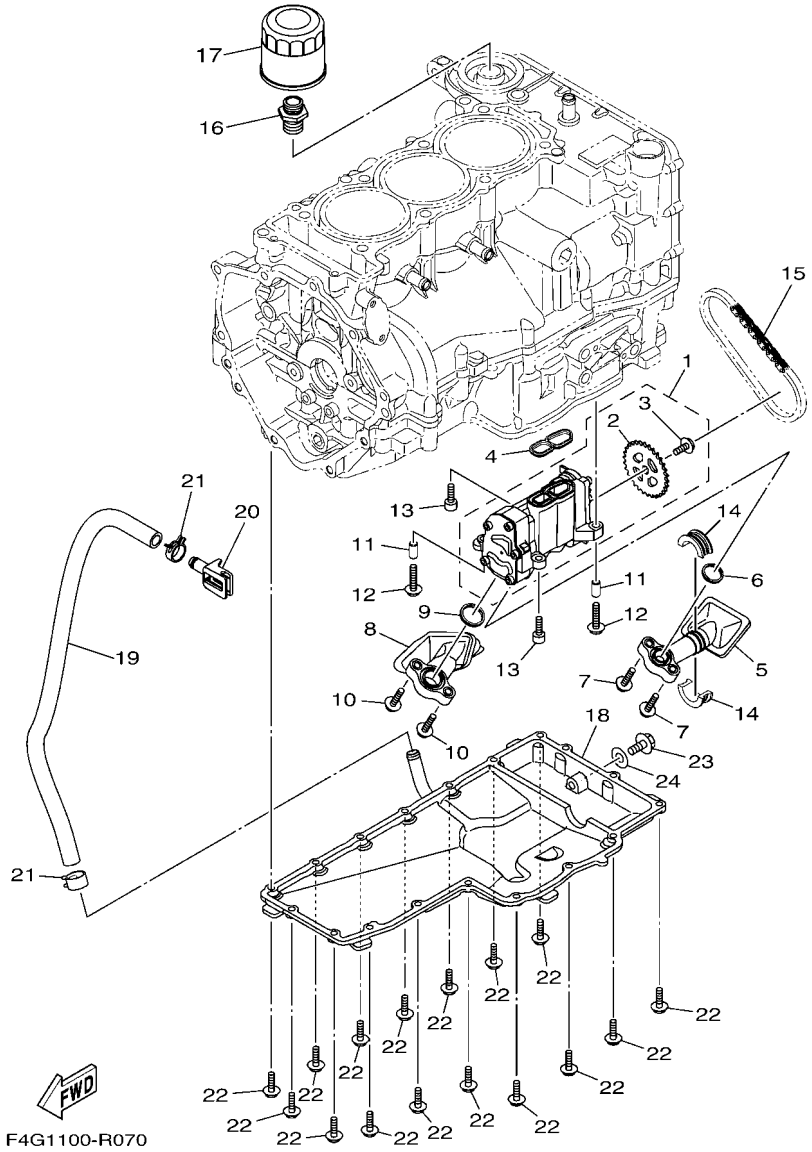

FIG. 7 OIL PUMP

REF. NO.	PART NO.	DESCRIPTION	F5T6	F5T7				REMARKS
1	6EY–13300–00	OIL PUMP ASSY	1	1				
2	6EY–13355–00	.SPROCKET, DRIVEN	1	1				
3	90149–06190	.SCREW	1	1				
4	6EY–13563–00	GASKET	1	1				
5	6EY–13405–00	OIL PIPE COMP. 1	1	1				
6	6EY–13477–00	GASKET	1	1				
7	90110–06172	BOLT, HEXAGON SOCKET HEAD	2	2				
8	6EY–13406–00	OIL PIPE COMP. 2	1	1				
9	6EY–13476–00	GASKET	1	1				
10	90110–06172	BOLT, HEXAGON SOCKET HEAD	2	2				
11	99530–08016	PIN, DOWEL	2	2				
12	90110–06287	BOLT, HEXAGON SOCKET HEAD	2	2				
13	90110–06335	BOLT, HEXAGON SOCKET HEAD	2	2				
14	6EY–15486–00	GROMMET	2	2				
15	94580–25060	CHAIN (DID25 60LE)	1	1				
16	90401–20008	BOLT, UNION	1	1				
17	5GH–13440–60	ELEMENT ASSY, OIL CLEANER	1	1				
18	6EY–13417–00	COVER, STRAINER	1	1				
19	90445–18M06	HOSE (L500)	1	1				
20	6EY–13455–00	PLUG	1	1				
21	90467–170A5	CLIP	2	2				
22	95024–06020	BOLT, FLANGE (SMALL HEAD)	18	18				
23	95814–08020	BOLT, FLANGE	1	1				
24	90430–08209	GASKET	1	1				

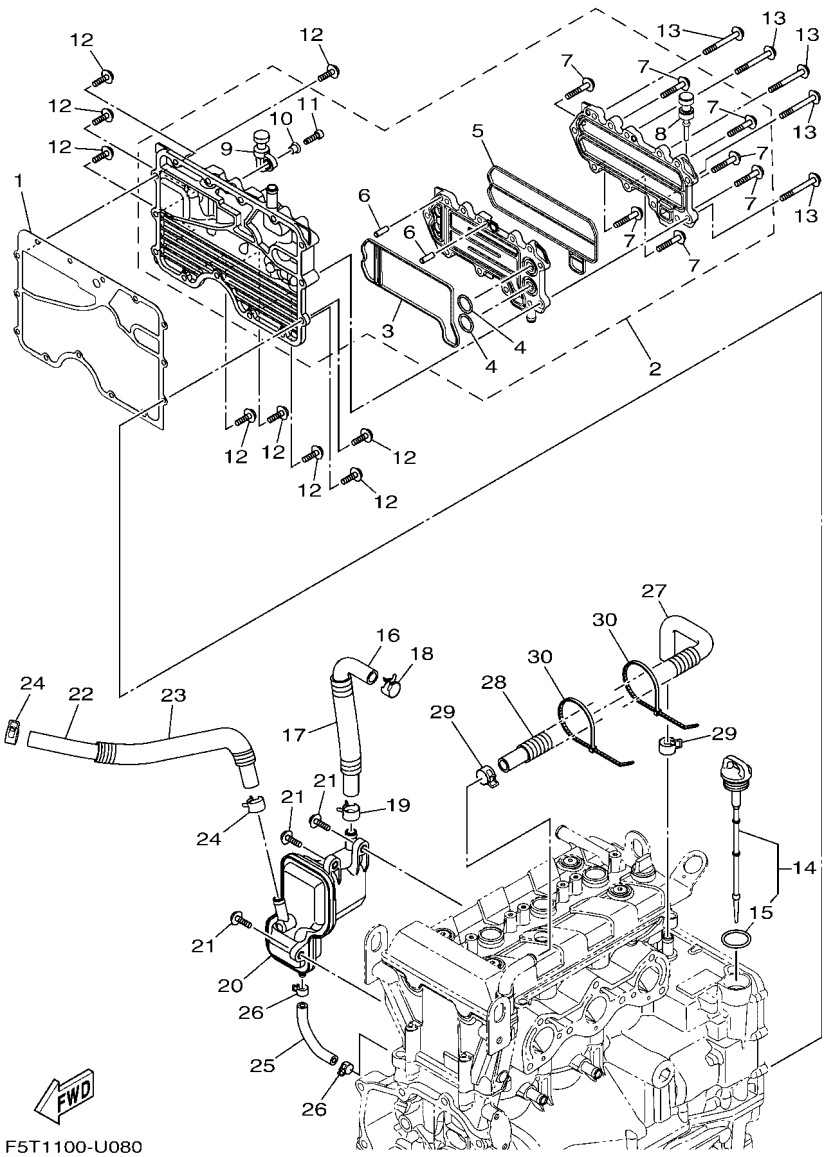

FIG. 8 OIL COOLER

REF. NO.	PART NO.	DESCRIPTION	F5T6	F5T7				REMARKS
1	6EY–15453–00	GASKET	1	1				
2	6EY–13470–00	OIL COOLER ASSY	1	1				
3	6EY–13556–00	.GASKET, MANIFOLD	1	1				
4	93210–19522	.O-RING	2	2				
5	6EY–13557–00	.GASKET	1	1				
6	93606–19M23	.PIN, DOWEL	2	2				
7	95814–06035	.BOLT, FLANGE	7	7				
8	90480–06M46	.GROMMET	1	1				
9	6S5–81364–10	.GROMMET	1	1				
10	90387–06M05	.COLLAR	1	1				
11	91380–06020	.BOLT	1	1				
12	95814–06020	BOLT, FLANGE	9	9				
13	95814–06055	BOLT, FLANGE	5	5				
14	6EY–15362–10	PLUG, OIL LEVEL	1	1				
15	93210–24M79	.O-RING	1	1				
16	6EY–11166–10	PIPE, BREATHER 1	1	1				
17	90447–19004	HOSE, WITH SPRING (L130)	1	1				
18	90467–200A3	CLIP	1	1				
19	90467–170A4	CLIP	1	1				
20	6EY–11164–00	SEPERATOR, OIL	1	1				
21	90105–06M15	BOLT, FLANGE	3	3				
22	90445–18020	HOSE (L420)	1	1				
23	90446–24MF4	HOSE (L350)	1	1				
24	90467–170A4	CLIP	2	2				
25	6EY–11125–00	PIPE, BREATHER 4	1	1				
26	90467–110A1	CLIP	2	2				
27	6EY–11126–10	PIPE, BREATHER 3	1	1				

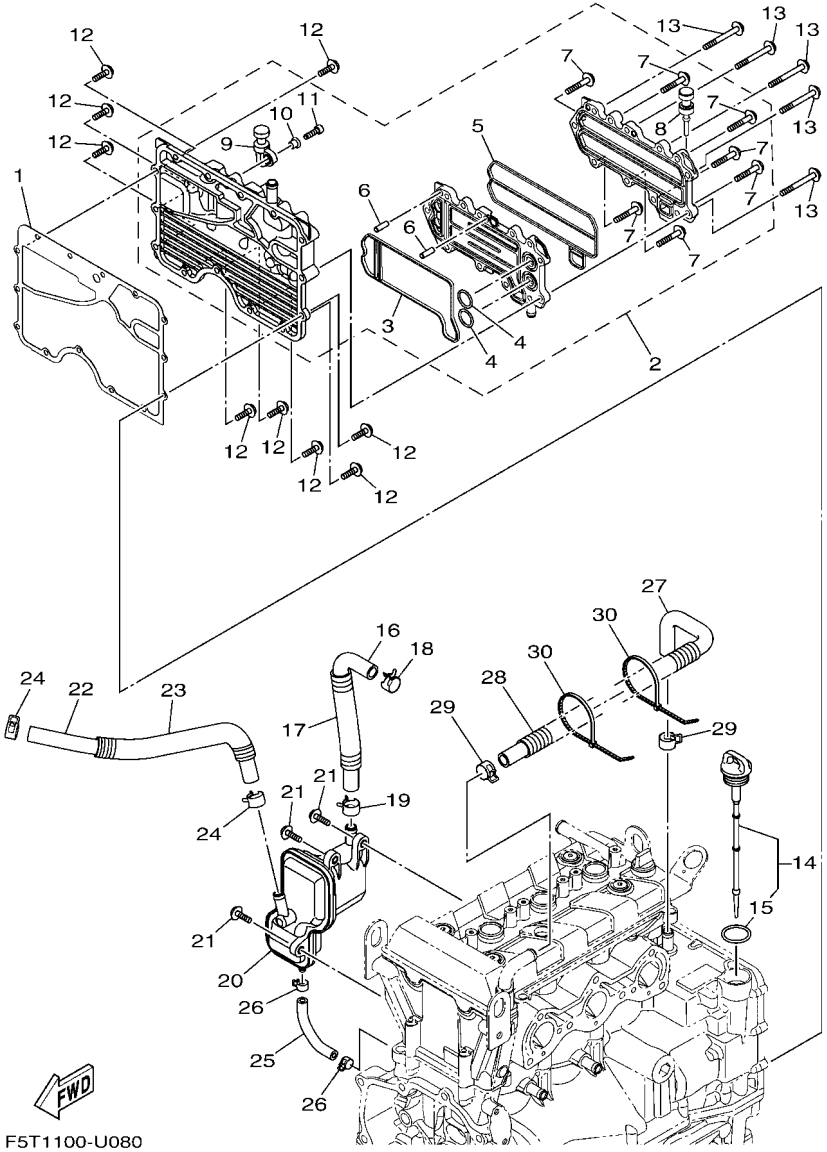

FIG. 8 OIL COOLER

REF. NO.	PART NO.	DESCRIPTION	F5T6	F5T7				REMARKS
28	90447–19014	TUBE (L300)	1	1				
29	90467–170A4	CLIP	2	2				
30	90464–35132	CLAMP	2	2				

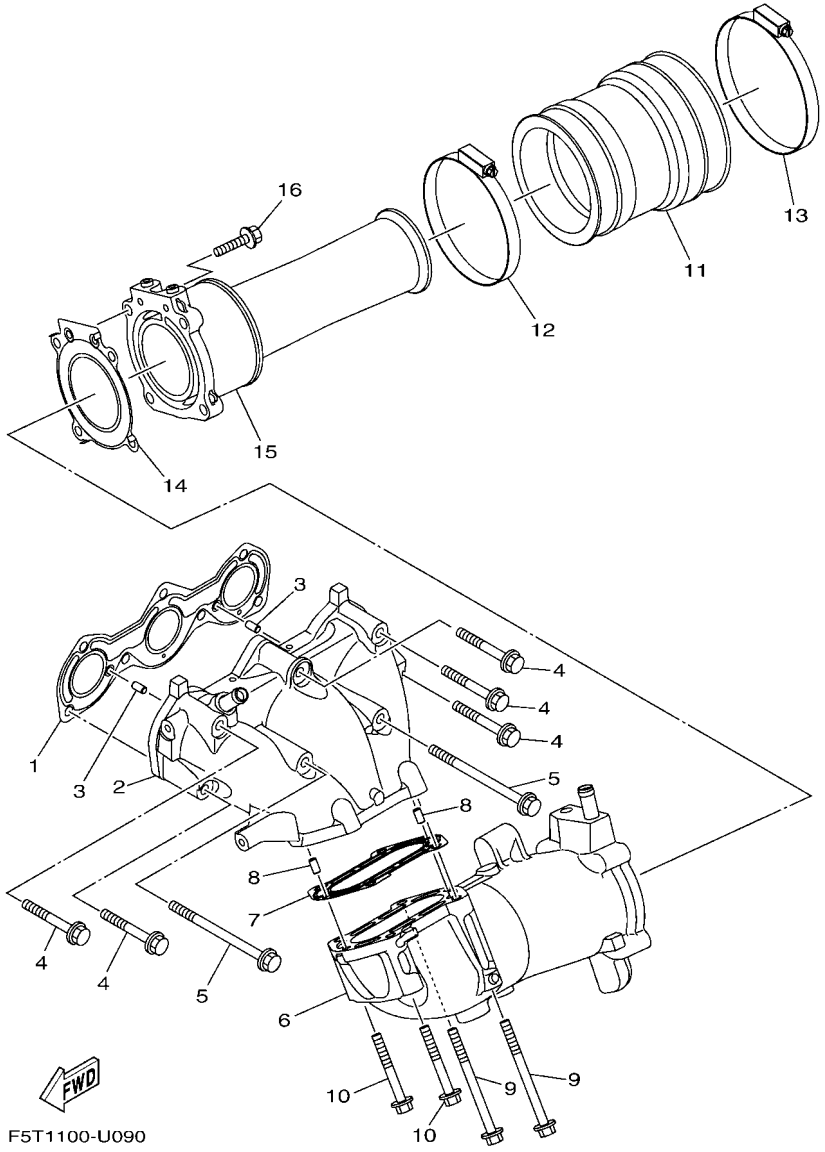

FIG. 9 EXHAUST 1

REF. NO.	PART NO.	DESCRIPTION	F5T6	F5T7				REMARKS
1	6EY–14613–00	GASKET, EXHAUST PIPE	1	1				
2	6EY–14711–00	MUFFLER 1	1	1				
3	93606–12019	PIN, DOWEL	2	2				
4	90119–08034	BOLT, WITH WASHER	5	5				
5	90119–08097	BOLT, WITH WASHER	2	2				
6	6EY–14721–00	MUFFLER 2	1	1				
7	6EY–14739–00	GASKET, MUFFLER DAMPER 1	1	1				
8	93606–12019	PIN, DOWEL	2	2				
9	90119–08029	BOLT, WITH WASHER	2	2				
10	90119–08093	BOLT, WITH WASHER	2	2				
11	6S5–E4752–00	PIPE, OUTLET	1	1				
12	90450–99808	HOSE CLAMP ASSY	1	1				
13	90450–99809	HOSE CLAMP ASSY	1	1				
14	6EY–14749–00	GASKET, MUFFLER DAMPER 2	1	1				
15	6EY–14784–00	PIPE, TAIL	1	1				
16	6EY–14719–00	BOLT, MUFFLER	4	4				

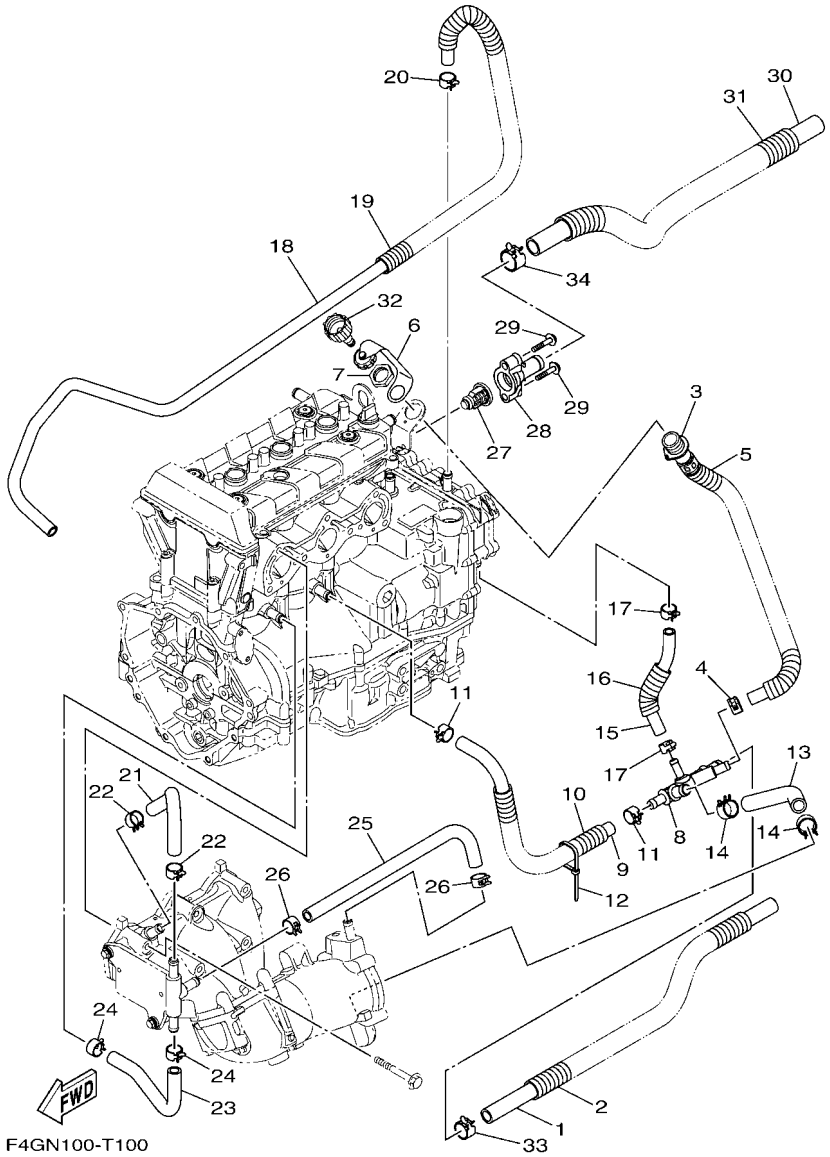

F4GN100-T100

FIG. 10 EXHAUST 2

REF. NO.	PART NO.	DESCRIPTION	F5T6	F5T7				REMARKS
1	6EY–E243E–00	HOSE 2	1	1				
2	F4G–U773D–00	TUBE	1	1				
3	6EY–12580–00	JOINT ASSY	1	1				
4	90467–150A5	CLIP	1	1				
5	90446–24M89	HOSE (L420)	1	1				
6	6EY–84385–00	CAP,1	1	1				
7	EU0–61652–00	NUT	1	1				
8	6EY–12584–00	JOINT, HOSE 3	1	1				
9	90445–18012	HOSE (L400)	1	1				
10	90447–19014	TUBE (L300)	1	1				
11	90467–160A0	CLIP	2	2				
12	90464–35132	CLAMP	1	1				
13	90445–21015	HOSE (L170)	1	1				
14	90467–200A3	CLIP	2	2				
15	90445–16019	HOSE (L160)	1	1				
16	90446–24M44	HOSE (L70)	1	1				
17	90467–150A1	CLIP	2	2				
18	90445–16020	HOSE (L1600)	1	1				
19	6EY–24864–00	TUBE	1	1				
20	90467–160A0	CLIP	1	1				
21	6EY–12577–00	HOSE 2	1	1				
22	90467–160A0	CLIP	2	2				
23	6S5–12579–00	HOSE 4	1	1				
24	90467–160A0	CLIP	2	2				
25	90445–18018	HOSE (L370)	1	1				
26	90467–160A0	CLIP	2	2				
27	6D3–12411–00	THERMOSTAT	1	1				

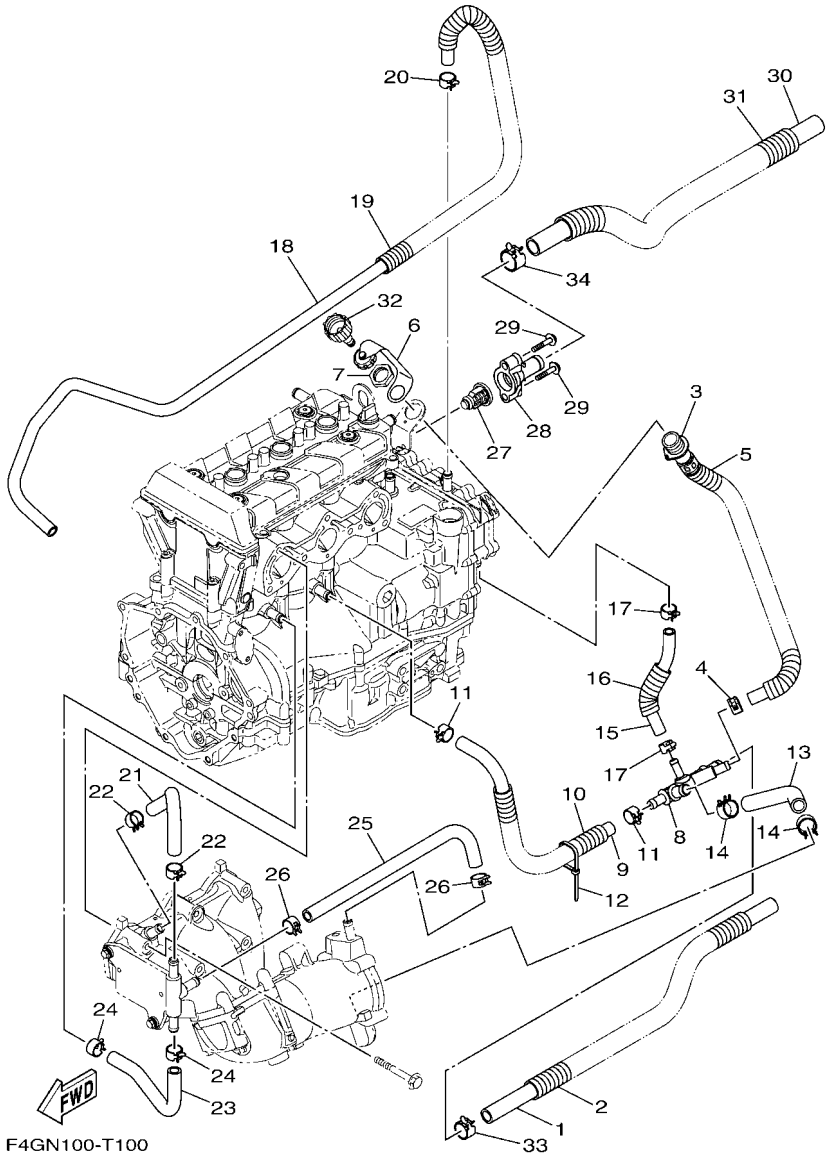

F4GN100-T100

FIG. 10 EXHAUST 2

REF. NO.	PART NO.	DESCRIPTION	F5T6	F5T7				REMARKS
28	6EY–12413–00	COVER, THERMOSTAT	1	1				
29	90105–06035	BOLT, FLANGE	2	2				
30	6EY–E243A–00	HOSE 1	1	1				
31	F4G–U773D–10	TUBE	1	1				
32	67X–E2590–10	CONDUCTION ASSY	1	1				
33	90467–200A3	CLIP	1	1				
34	90467–240A0	CLIP	1	1				

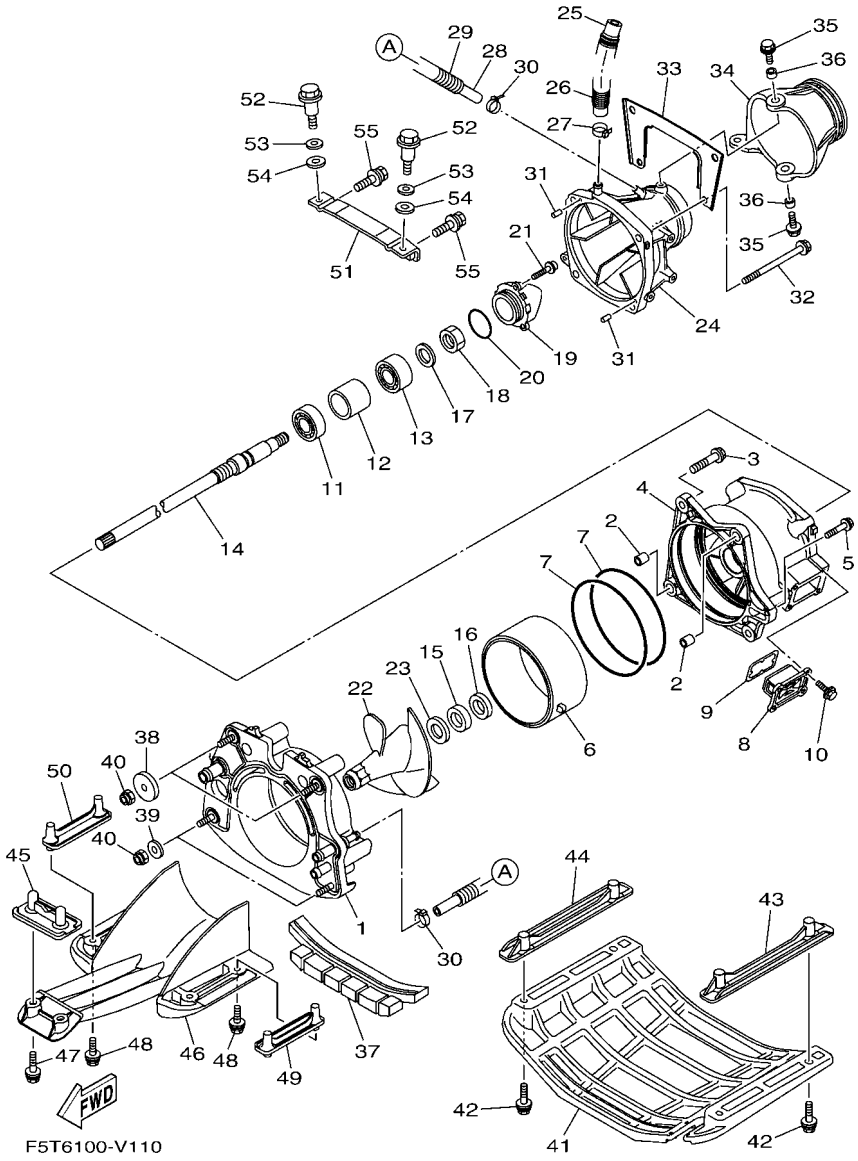

FIG. 11 JET UNIT 1

REF. NO.	PART NO.	DESCRIPTION	F5T6	F5T7				REMARKS
1	6CS–G5831–20	PLATE, TRANSOM	1	1				
2	99590–14016	PIN, DOWEL	2	2				
3	90119–10810	BOLT, WITH WASHER	4	4				
4	6EY–R1312–00	HOUSING, IMPELLER	1	1				
5	90119–06893	BOLT, WITH WASHER	1	1				
6	6HH–R1337–00	SLEEVE, IMPELLER	1	1				
7	93211–65800	O-RING	2	2				
8	6GN–G6882–00	FILTER	1	1				
9	66V–42414–00	O-RING	1	1				
10	90119–06889	BOLT, WITH WASHER	4	4				
11	93306–205U0	BEARING	1	1				
12	65V–G5538–00	SPACER 1	1	1				
13	93306–304U1	BEARING	1	1				
14	68Y–45511–00	SHAFT, DRIVE	1	1				
15	93101–28M66	OIL SEAL	1	1				
16	93101–28002	OIL SEAL	1	1				
17	92990–16600	WASHER	1	1				
18	95317–16700	NUT	1	1				
19	6EY–R1326–00	CAP	1	1				
20	93210–44003	O-RING	1	1				
21	90110–06822	BOLT, HEXAGON SOCKET HEAD	3	3				
22	6EY–R1321–01	IMPELLER	1	1				
23	6EY–R1348–00	SPACER	1	1				
24	6EX–R1318–01	NOZZLE	1	1				
25	6CN–U72M2–00	HOSE 1	1	1				
26	90446–24M46	HOSE (L175)	1	1				
27	90601–118UF	BAND, HOSE 18	1	1				

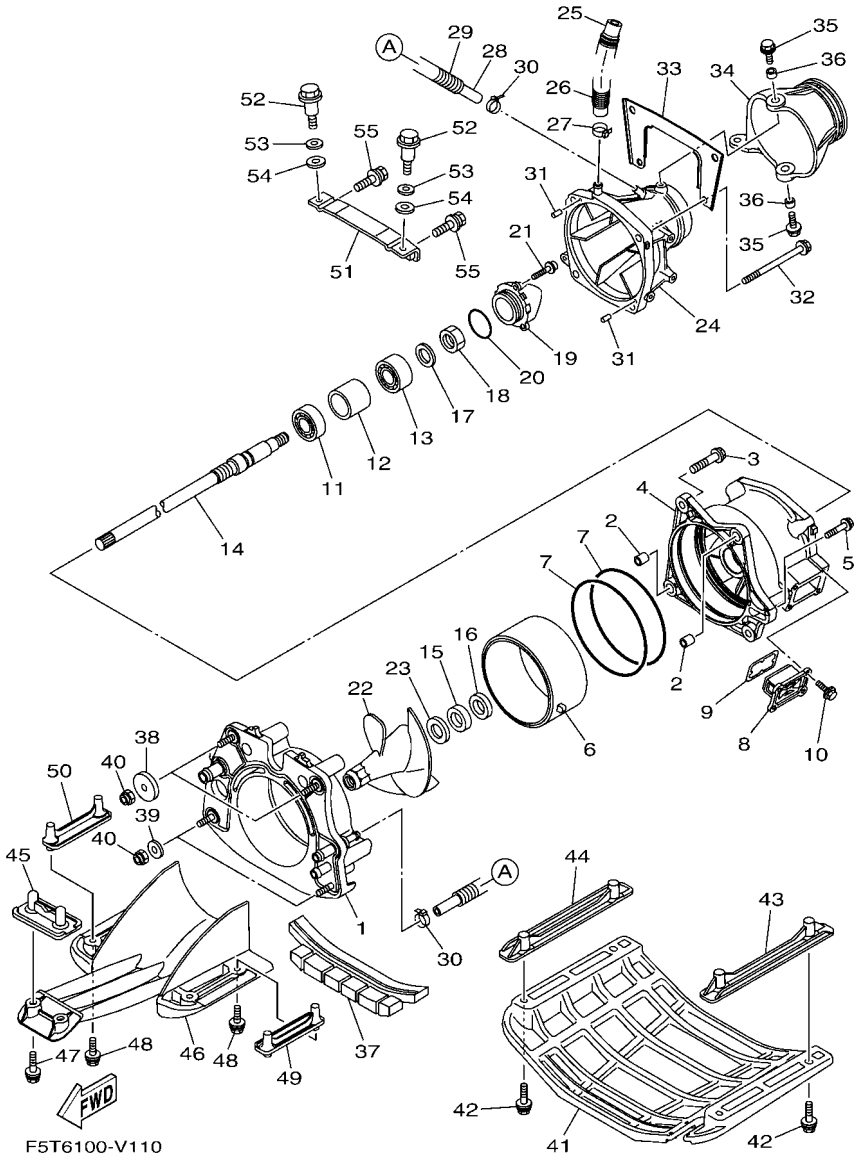

FIG. 11 JET UNIT 1

REF. NO.	PART NO.	DESCRIPTION	F5T6	F5T7				REMARKS
28	90445–14807	HOSE (L355)	1	1				
29	90446–20MF5	HOSE (L320)	1	1				
30	90465–11829	CLAMP	2	2				
31	93606–12019	PIN, DOWEL	2	2				
32	90119–10810	BOLT, WITH WASHER	4	4				
33	6EY–R1959–00	BRACKET	1	1				
34	6EX–R1313–00	NOZZLE, DEFLECTOR	1	1				
35	90119–08840	BOLT, WITH WASHER	2	2				
36	90387–08M06	COLLAR	2	2				
37	F2X–U72C0–00	SPACER	1	1				
38	F1S–U725E–01	WASHER	2	2				
39	90201–10801	WASHER, PLATE	2	2				
40	9572R–10300	NUT, NYLON	4	4				
41	F2X–U273B–00	PLATE 2	1	1				
42	90119–08823	BOLT, WITH WASHER	4	4				
43	F2X–U8572–00	BRACKET 2	1	1				
44	F2X–U8572–00	BRACKET 2	1	1				
45	F2S–U8577–00	BRACKET, 3	1	1				
46	6EX–R1333–00	SCREEN, INTAKE	1	1				
47	90119–08823	BOLT, WITH WASHER	2	2				
48	90119–08827	BOLT, WITH WASHER	4	4				
49	F3P–U8571–00	BRACKET 1	1	1				
50	F3P–U8571–00	BRACKET 1	1	1				
51	F2C–U7557–01	BRACKET	1	1				
52	90109–08041	BOLT	2	2				
53	92990–12200	WASHER, PLAIN	2	2				
54	90430–12002	GASKET	2	2				

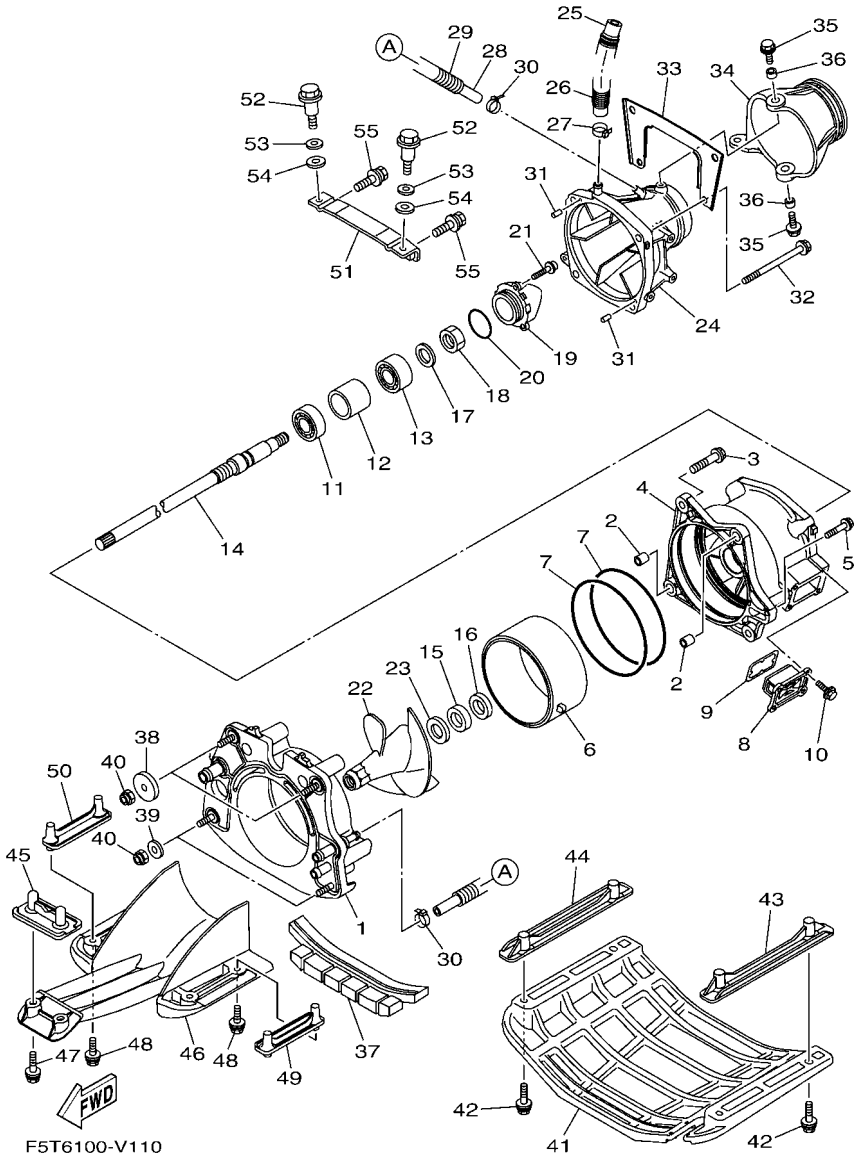

FIG. 11 JET UNIT 1

REF. NO.	PART NO.	DESCRIPTION	F5T6	F5T7				REMARKS
55	90119–089U7	BOLT, WITH WASHER	2	2				

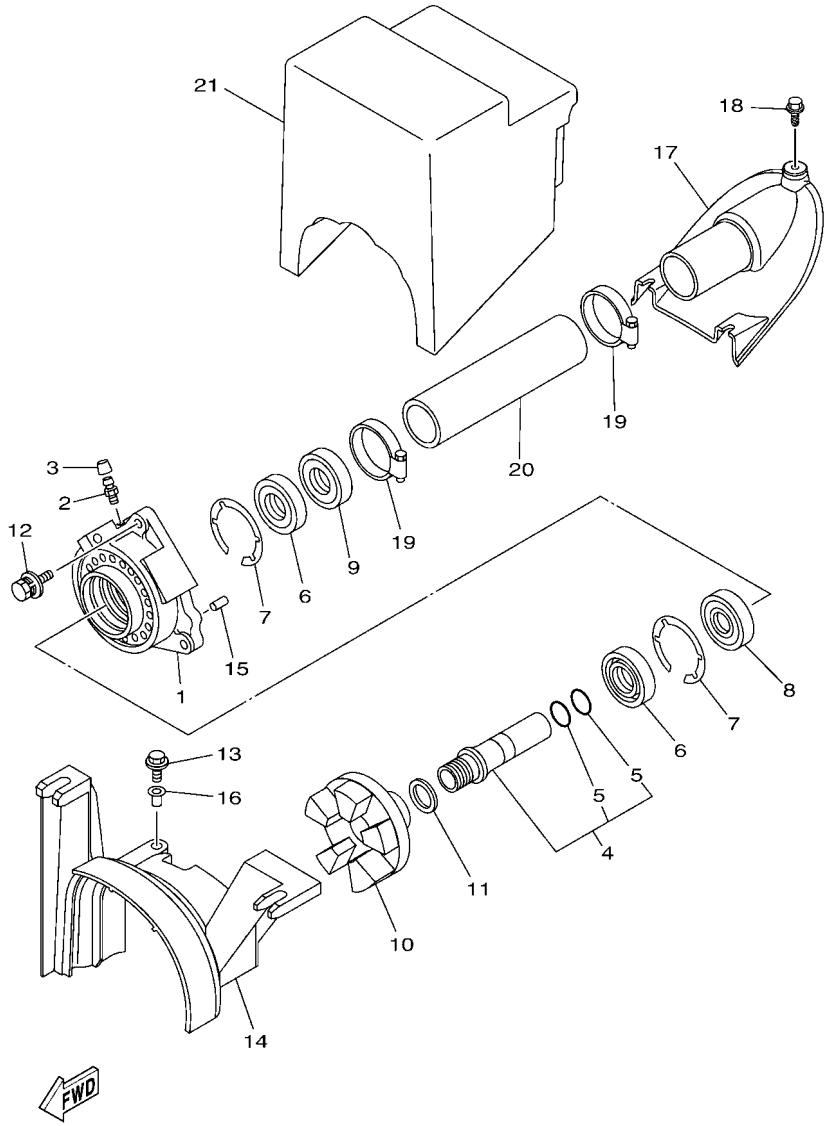

FIG. 12 JET UNIT 2

REF. NO.	PART NO.	DESCRIPTION	F5T6	F5T7				REMARKS
1	61X–G5332–00	HOUSING, BEARING	1	1				
2	93700–06M03	NIPPLE, GREASE	1	1				
3	663–45119–00	CAP, GREASE NIPPLE	1	1				
4	60E–XR132–01	SHAFT, COUPLER	1	1				
5	93210–19812	.O-RING	2	2				
6	93101–25M55	OIL SEAL	2	2				
7	99009–52500	CIRCLIP	2	2				
8	93306–205A3	BEARING	1	1				
9	93102–25009	OIL SEAL	1	1				
10	6EY–G5593–00	FLANGE, COUPLING 1	1	1				
11	90201–27800	WASHER, PLATE	1	1				
12	F4G–U1369–00	BOLT	3	3				
13	90119–06891	BOLT, WITH WASHER	1	1				
14	6EY–R1381–00	COVER	1	1				
15	93606–12019	PIN, DOWEL	2	2				
16	90387–06289	COLLAR	1	1				
17	F2N–U883E–00	JOINT, PIPE	1	1				
18	90109–06832	BOLT	3	3				
19	90601–155U4	BAND, HOSE 55	2	2				
20	F2N–U883B–00	PIPE 1	1	1				
21	F1K–U892D–00	FLOTATION, STERN	1	1				

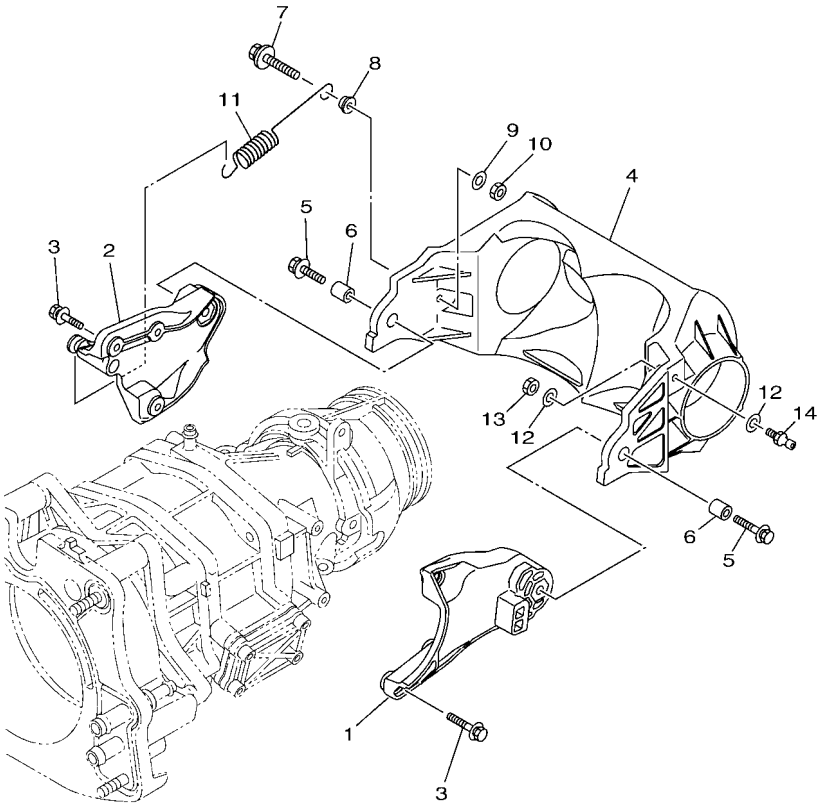

F4GN100-T130

FIG. 13 JET UNIT 3

REF. NO.	PART NO.	DESCRIPTION	F5T6	F5T7				REMARKS
1	6ET–R1341–10	BRACKET 1	1	1				
2	6ET–R1342–10	BRACKET 2	1	1				
3	90119–06891	BOLT, WITH WASHER	6	6				
4	6ET–R1314–10	GATE, REVERSE	1	1				
5	90119–08840	BOLT, WITH WASHER	2	2				
6	90387–08M30	COLLAR	2	2				
7	90119–069UX	BOLT, WITH WASHER	1	1				
8	90387–06319	COLLAR	1	1				
9	90201–06801	WASHER, PLATE	1	1				
10	95380–06600	NUT, HEXAGON	1	1				
11	6S5–R2358–00	SPRING, RETAINER	1	1				
12	90201–06801	WASHER, PLATE	2	2				
13	95380–06600	NUT, HEXAGON	1	1				
14	6GA–U1461–10	STUD, JOINT BALL	1	1				

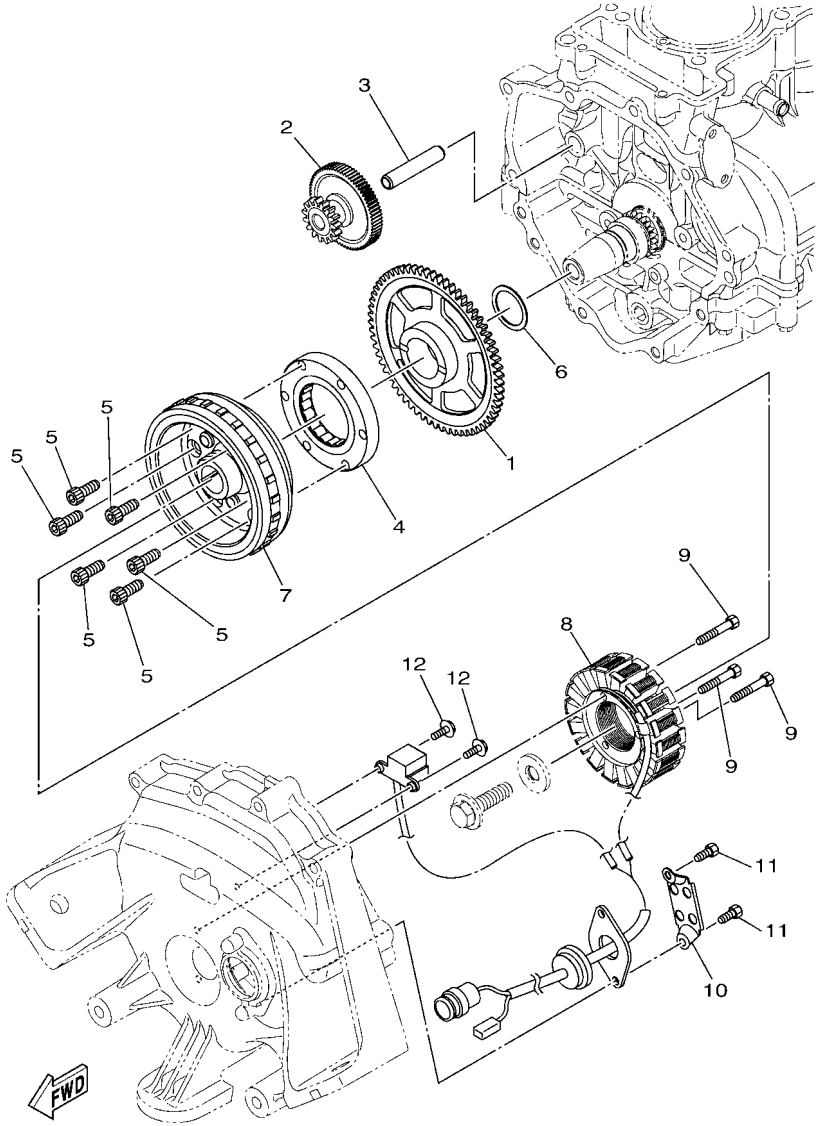

F4G1100-R140

FIG. 14 GENERATOR

REF. NO.	PART NO.	DESCRIPTION	F5T6	F5T7				REMARKS
1	8FA–15515–00	GEAR 3	1	1				
2	2HC–15512–00	GEAR, IDLER 1	1	1				
3	8ES–15521–00	SHAFT 1	1	1				
4	6EY–15590–00	STARTER ONE-WAY ASSY	1	1				
5	90110–08212	BOLT, HEXAGON SOCKET HEAD	6	6				
6	90201–30013	WASHER, PLATE	1	1				
7	6EY–81450–00	ROTOR ASSY	1	1				
8	6EY–81410–00	STATOR ASSY	1	1				
9	91317–06035	BOLT,HEX.SOCKET HEAD	3	3				
10	60E–81328–00	CLAMP	1	1				
11	91317–06014	BOLT,HEX.SOCKET HEAD	2	2				
12	97513–05514	BOLT, WITH WASHER	2	2				

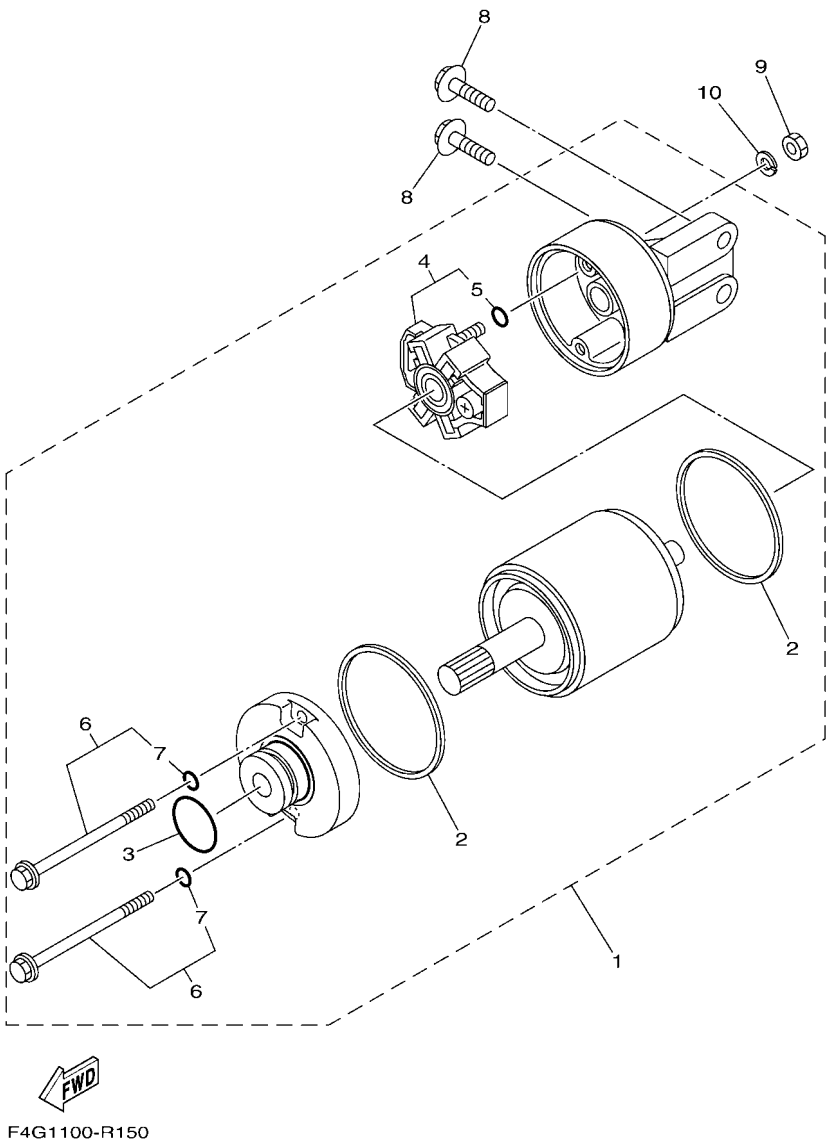

FIG. 15 STARTING MOTOR

REF. NO.	PART NO.	DESCRIPTION	F5T6	F5T7				REMARKS
1	6EY–81800–00	STARTING MOTOR ASSY	1	1				
2	11H–81844–00	.GASKET	2	2				
3	1FK–81847–00	.O-RING	1	1				
4	6EY–81840–00	.BRUSH HOLDER ASSY	1	1				
5	3TB–81847–00	..O-RING	1	1				
6	6EY–81826–00	.BOLT	2	2				
7	3TB–81847–00	..O-RING	1	1				
8	97513–08530	BOLT, WITH WASHER	2	2				
9	95380–06700	NUT	1	1				
10	92990–06100	WASHER, SPRING	1	1				

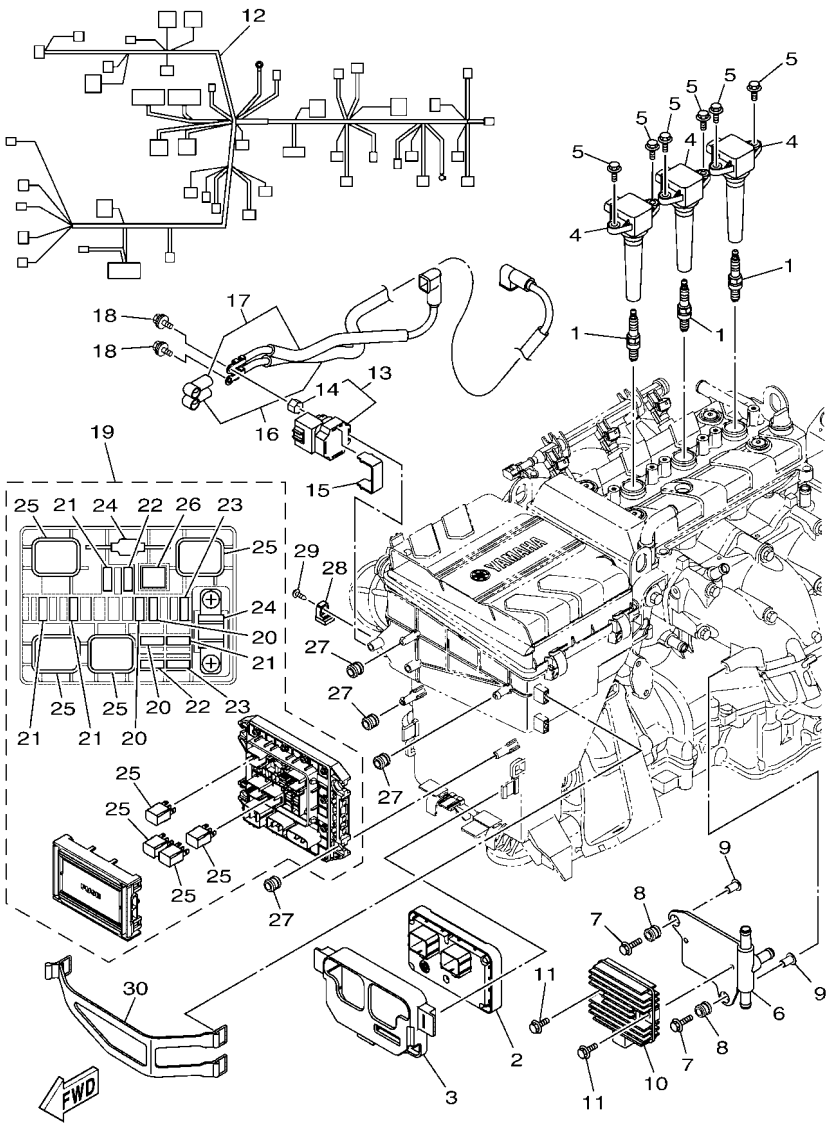

F5T6100-V160

FIG. 16 ELECTRICAL 1

REF. NO.	PART NO.	DESCRIPTION	F5T6	F5T7				REMARKS
1	94702–00409	PLUG, SPARK (NGK CR9EB)	3	3				
2	6EY–8591A–B1	ENGINE CONTROL UNIT ASSY	1	1				
3	6EY–8591S–00	GROMMET, ECU	1	1				
4	6EX–82310–00	IGNITION COIL ASSY	3	3				
5	95880–06016	BOLT, FLANGE	6	6				
6	6EY–81975–00	PLATE, RECTIFIER FITTING	1	1				
7	90119–06M88	BOLT, WITH WASHER	2	2				
8	6A0–82317–00	DAMPER, IGNITION COIL	2	2				
9	90387–06119	COLLAR	2	2				
10	6D3–81960–00	RECTIFIER & REGULATOR ASSY	1	1				
11	95814–06020	BOLT, FLANGE	2	2				
12	6EY–8259L–B0	WIRE HARNESS ASSY 1	1	1				
13	6EY–81940–09	STARTER RELAY ASSY	1	1				
14	6EY–82355–00	.GROMMET	1	1				
15	6EY–81953–00	STAY, RELAY	1	1				
16	6EY–82115–00	WIRE, PLUS LEAD	1	1				
17	6EY–82117–00	WIRE, LEAD	1	1				
18	97595–06612	BOLT, WITH WASHER	2	2				
19	6EX–82170–01	FUSE BOX ASSY	1	1				
20	67F–82151–30	.FUSE (3A)	3	3				
21	67F–82151–40	.FUSE (10A)	4	4				
22	67F–82151–00	.FUSE (20A)	2	2				
23	67F–82151–10	.FUSE (30A)	2	2				
24	6EX–82151–00	.FUSE (50A)	2	2				
25	6EX–8195A–00	.RELAY ASSY	4	4				
26	6EX–2812A–00	.PULLER, FUSE	1	1				
27	6A0–82317–00	DAMPER, IGNITION COIL	4	4				

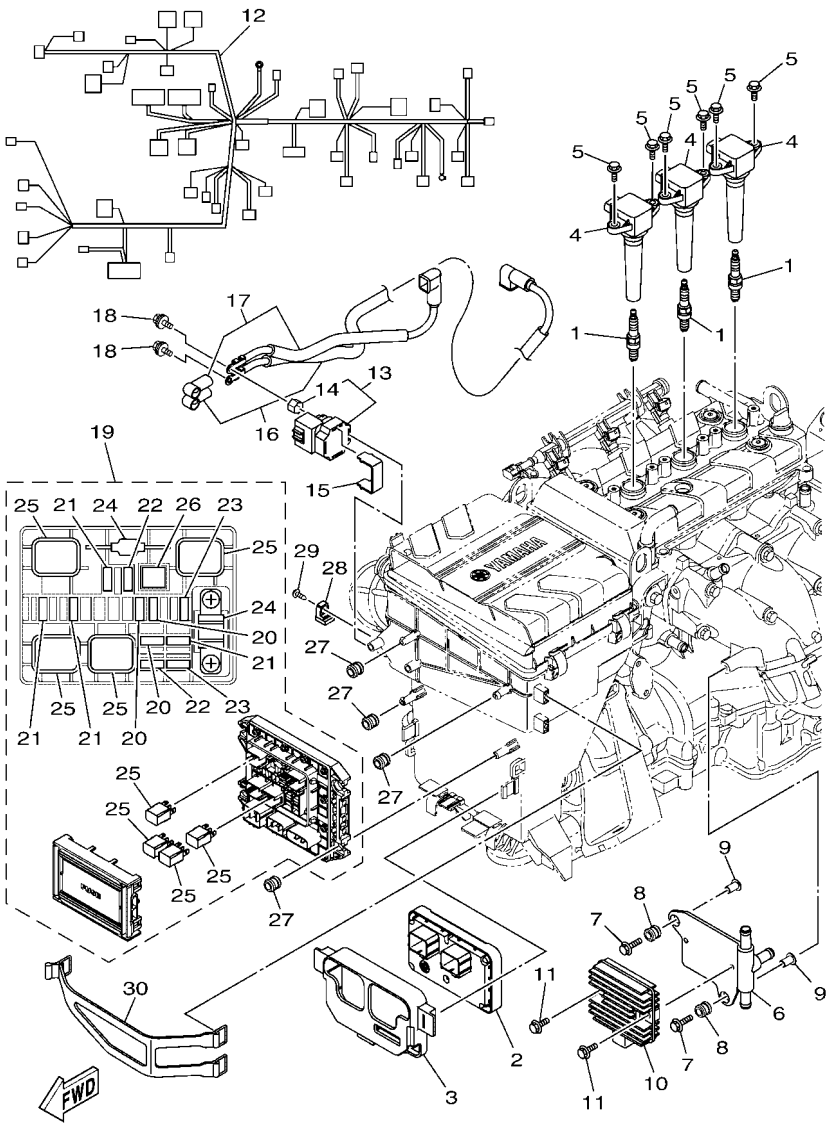

F5T6100-V160

FIG. 16 ELECTRICAL 1

REF. NO.	PART NO.	DESCRIPTION	F5T6	F5T7				REMARKS
28	6AA–85542–00	BRACKET	1	1				
29	90160–05003	SCREW, ROUND TAPPING	1	1				
30	6EY–82593–00	BAND	1	1				

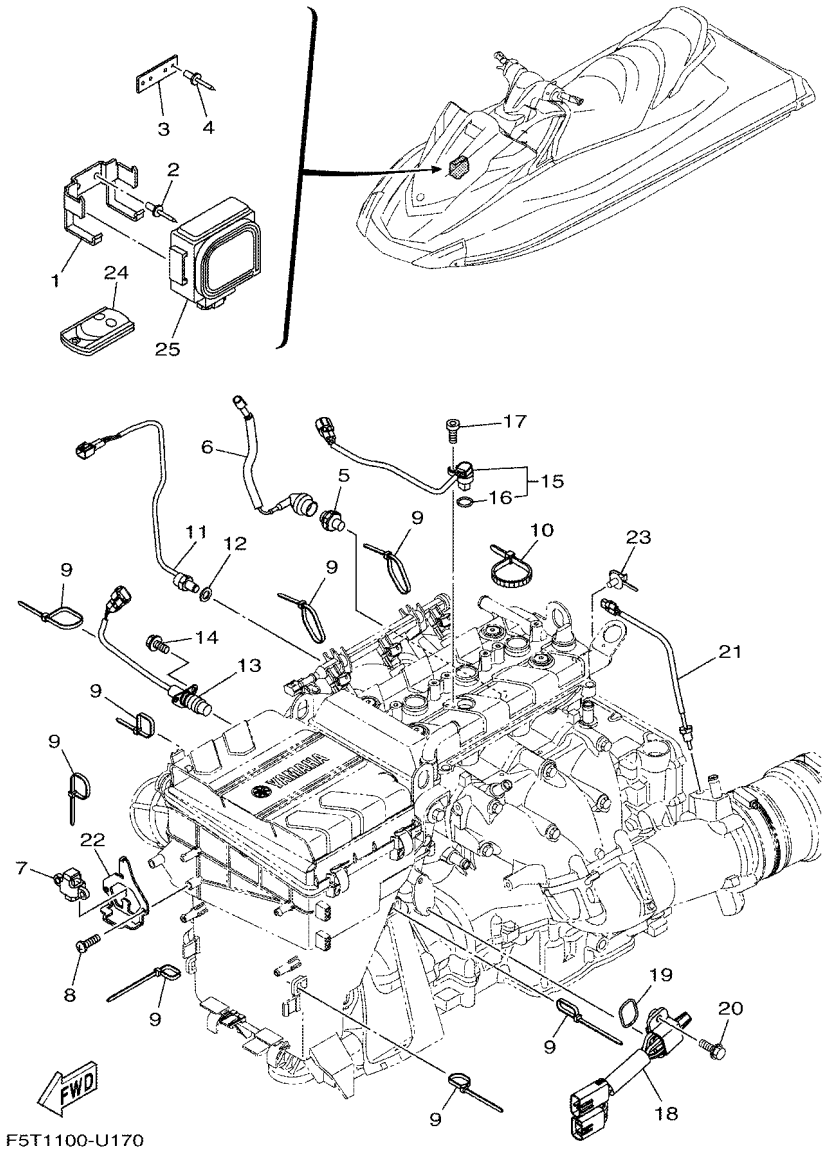

FIG. 17 ELECTRICAL 2

REF. NO.	PART NO.	DESCRIPTION	F5T6	F5T7				REMARKS
1	F1W–U826C–00	BRACKET	1	1				
2	90267–489U1	RIVET,BLIND	2	2				
3	F1W–U8376–00	PLATE	1	1				
4	90267–489U1	RIVET,BLIND	2	2				
5	68V–82504–00	OIL PRESSURE SWITCH ASSY	1	1				
6	60E–81315–00	LEAD WIRE ASSY	1	1				
7	6ET–82576–00	SENSOR, LEAN ANGLE	1	1				
8	97780–60520	SCREW, TAPPING	2	2				
9	90464–35132	CLAMP	8	8				
10	90465–13M39	CLAMP	1	1				
11	61A–85790–00	THERMOSENSOR ASSY	1	1				
12	92990–10600	WASHER, PLATE	1	1				
13	6CR–82560–00	THERMO SWITCH ASSY	1	1				
14	97E95–06520	BOLT, HEXAGON W/W DEEP RECESS	2	2				
15	2S3–85896–01	SENSOR, CAM POSITION	1	1				
16	4D9–81168–00	.O-RING	1	1				
17	91380–06016	BOLT	1	1				
18	6CS–8273J–10	EARTH PLATE COMP.	1	1				
19	93210–32172	O-RING	1	1				
20	90119–06MA3	BOLT, WITH WASHER	2	2				
21	6DE–85790–00	THERMOSENSOR ASSY	1	1				
22	6EY–83618–10	PLATE	1	1				
23	90464–20005	CLAMP	1	1				
24	6B6–86261–00	XMTR. COMP.	1	1				FOR CAN
	6B6–86261–11	XMTR. COMP.	2	2				FOR EUR
25	6B6–86265–00	RECEIVER COMPLETE	1	1				FOR CAN
	6B6–86265–11	RECEIVER COMPLETE	1	1				FOR EUR

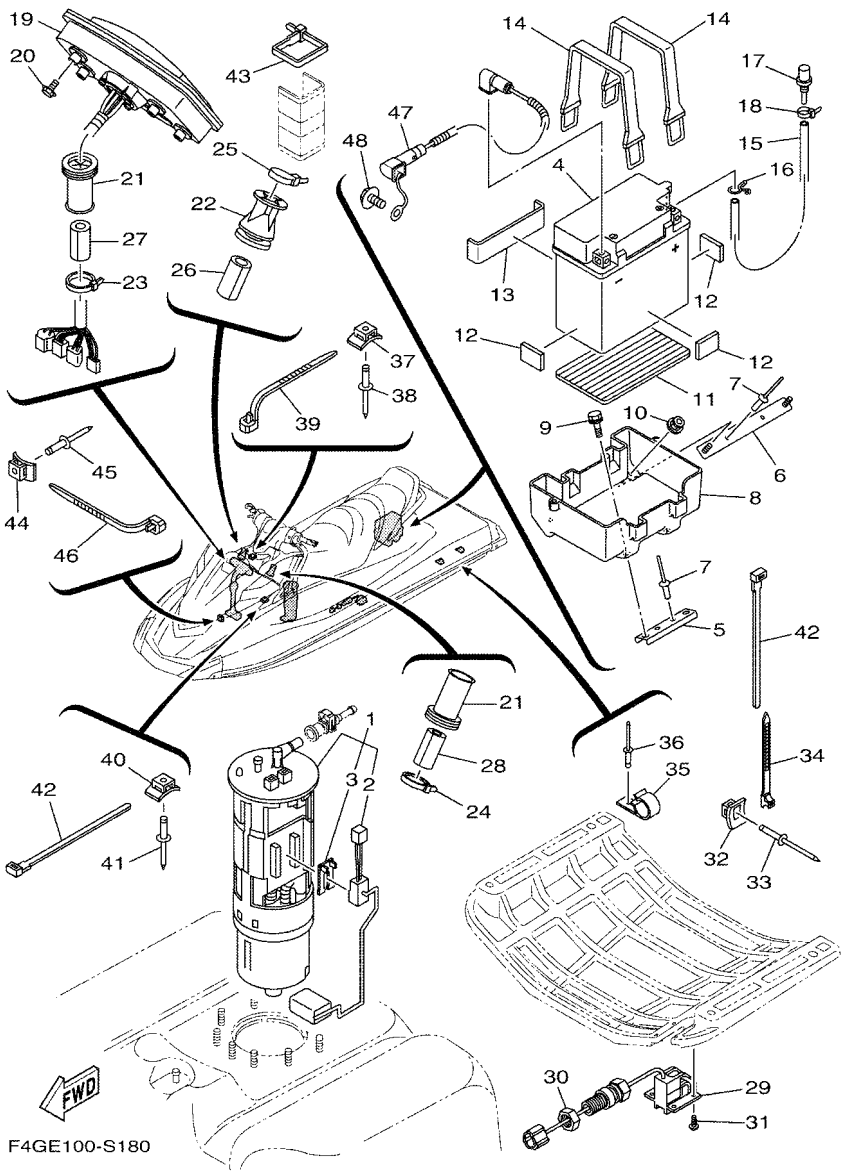

FIG. 18 ELECTRICAL 3

REF. NO.	PART NO.	DESCRIPTION	F5T6	F5T7				REMARKS
1	6S5–13907–03	FUEL PUMP COMP.	1	1				
2	6S5–682E0–00	.FUEL SENDER ASSY	1	1				
3	60E–82556–00	.DAMPER, STOPPER	1	1				
4	EU0–U8217–H2	BATTERY (YB16CL-B)	1	1				
5	F2S–U8592–00	PLATE, BASE 2	1	1				
6	F2S–U8593–00	PLATE, BASE 3	1	1				
7	90267–489U1	RIVET,BLIND	4	4				
8	F2S–U8211–00	CASE, BATTERY	1	1				
9	90119–06832	BOLT, WITH WASHER	2	2				
10	F2N–U142L–00	NUT, LOCK	2	2				
11	F1S–U8221–00	PAD, BATTERY	1	1				
12	EU0–U8221–30	PAD, BATTERY 2	3	3				
13	F1K–U8221–00	PAD, BATTERY	1	1				
14	EU0–U821D–00	BAND,BATTERY 1	2	2				
15	F0D–U785G–10	HOSE, AIR VENT	1	1				
16	90467–089U1	CLIP	1	1				
17	GJ3–6215F–00	NIPPLE	1	1				
18	90465–11829	CLAMP	1	1				
19	F2X–6820A–01	METER ASSY	1	1				
20	90119–05803	BOLT, WITH WASHER	4	4				
21	GU2–6822E–01	GROMMET	2	2				
22	F3J–U822E–00	GROMMET	1	1				
23	90464–32801	CLAMP	1	1				
24	90464–32801	CLAMP	1	1				
25	90464–32801	CLAMP	1	1				
26	GJ1–U7578–21	PACKING, HOSE 2	1	1				
27	GJ1–U7578–11	PACKING, HOSE 2	1	1				

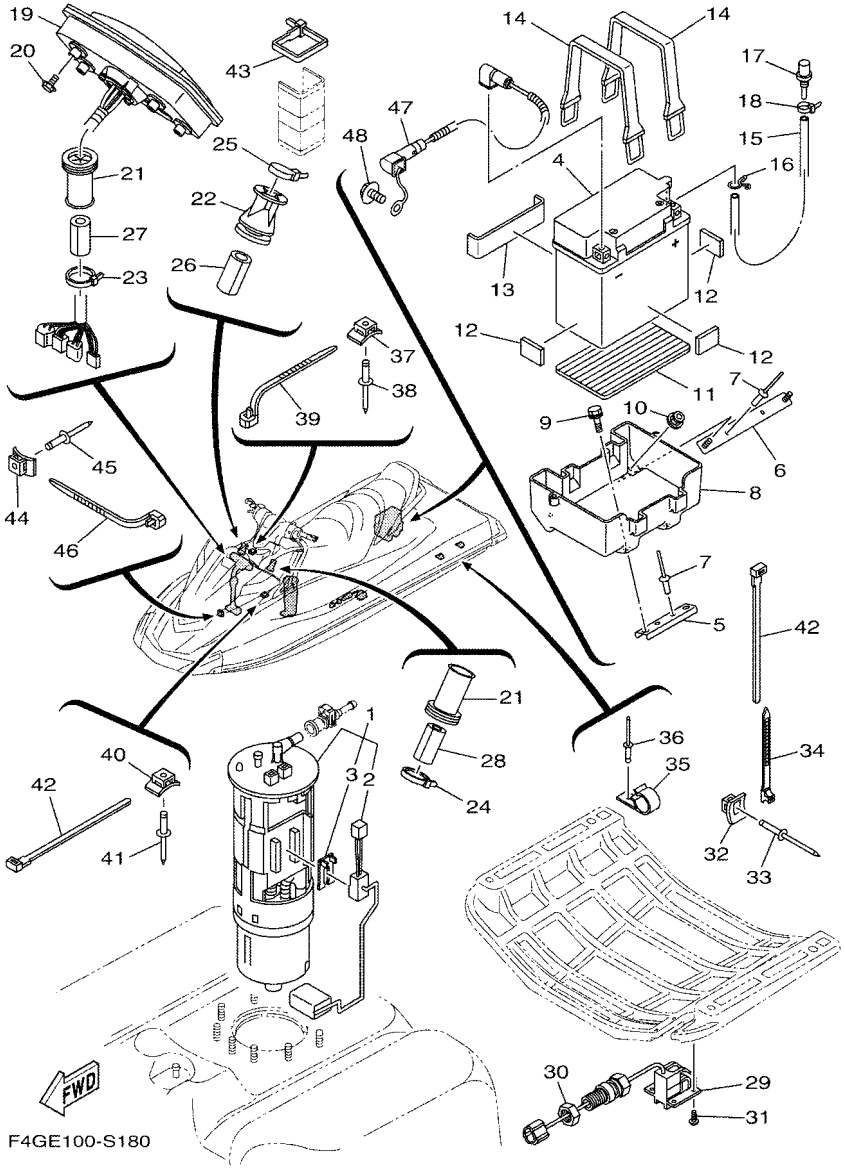

FIG. 18 ELECTRICAL 3

REF. NO.	PART NO.	DESCRIPTION	F5T6	F5T7				REMARKS
28	GJ1–U7578–11	PACKING, HOSE 2	1	1				
29	F1S–U8K31–03	SENSOR SPEED	1	1				
30	F2C–U151S–00	NUT	1	1				
31	90150–05807	SCREW, ROUND HEAD	4	4				
32	F1W–U828M–00	BASE, CLAMP	6	6				
33	90267–489U6	RIVET, BLIND	6	6				
34	90464–32801	CLAMP	5	5				
35	F3J–U8368–01	CLAMP	2	2				
36	90267–409U5	RIVET, BLIND	2	2				
37	F1W–U828M–00	BASE, CLAMP	1	1				
38	90267–489U6	RIVET, BLIND	1	1				
39	90464–32801	CLAMP	1	1				
40	F1W–U828M–00	BASE, CLAMP	1	1				
41	90267–489U6	RIVET, BLIND	1	1				
42	90601–200U2	BAND	3	3				
43	90601–200U2	BAND	1	1				
44	F1W–U828M–00	BASE, CLAMP	1	1				
45	90267–489U6	RIVET, BLIND	1	1				
46	90464–32801	CLAMP	1	1				
47	6EY–82116–00	WIRE, MINUS LEAD	1	1				
48	97513–08514	BOLT, WITH WASHER	1	1				

FIG. 19 ENGINE MOUNT

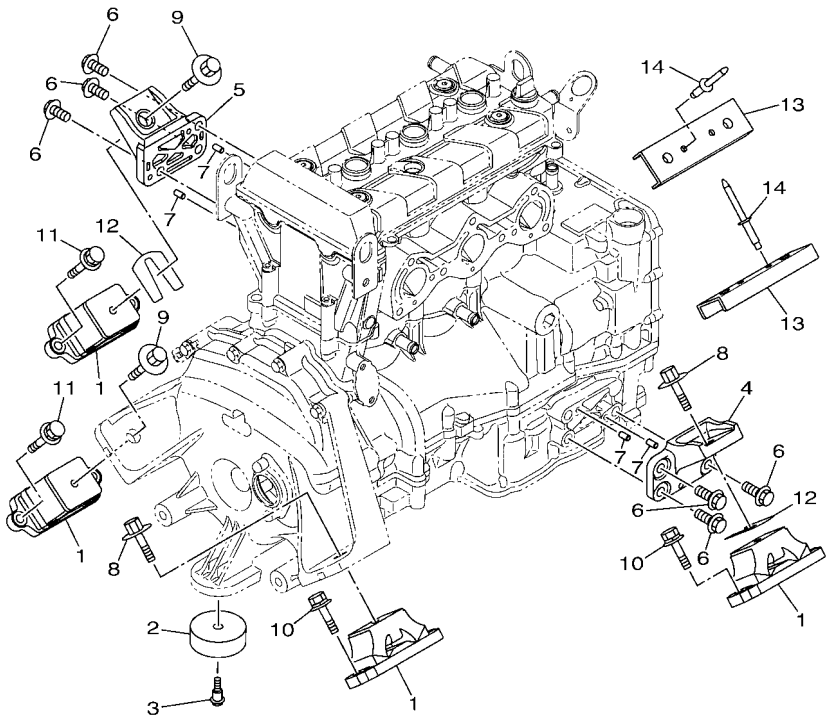

F5T6100-V190

REF. NO.	PART NO.	DESCRIPTION	F5T6	F5T7				REMARKS
1	6GA–44517–00	MOUNT RUBBER	4	4				
2	6EY–44574–00	STOPPER, LOWER MOUNT RUBBER	1	1				
3	90109–06M92	BOLT	1	1				
4	6EY–41661–00	BRACKET 1	1	1				
5	6EY–41662–00	BRACKET 2	1	1				
6	90105–10M49	BOLT, FLANGE	6	6				
7	93606–12019	PIN, DOWEL	4	4				
8	90119–08859	BOLT, WITH WASHER	2	2				
9	90119–08859	BOLT, WITH WASHER	2	2				
10	90119–08823	BOLT, WITH WASHER	4	4				
11	90119–08823	BOLT, WITH WASHER	4	4				
12	EU0–U7354–00–01	SHIM (T=0.1)	4	4				UN
	EU0–U7354–00–03	SHIM (T=0.3)	4	4				UN
	EU0–U7354–00–05	SHIM (T=0.5)	4	4				UN
	EU0–U7354–00–10	SHIM (T=1.0)	4	4				UN
	EU0–U7354–00–20	SHIM (T=2.0)	4	4				UN
13	F2S–U732B–00	PLATE	2	2				
14	90267–489U2	RIVET, BLIND	4	4				

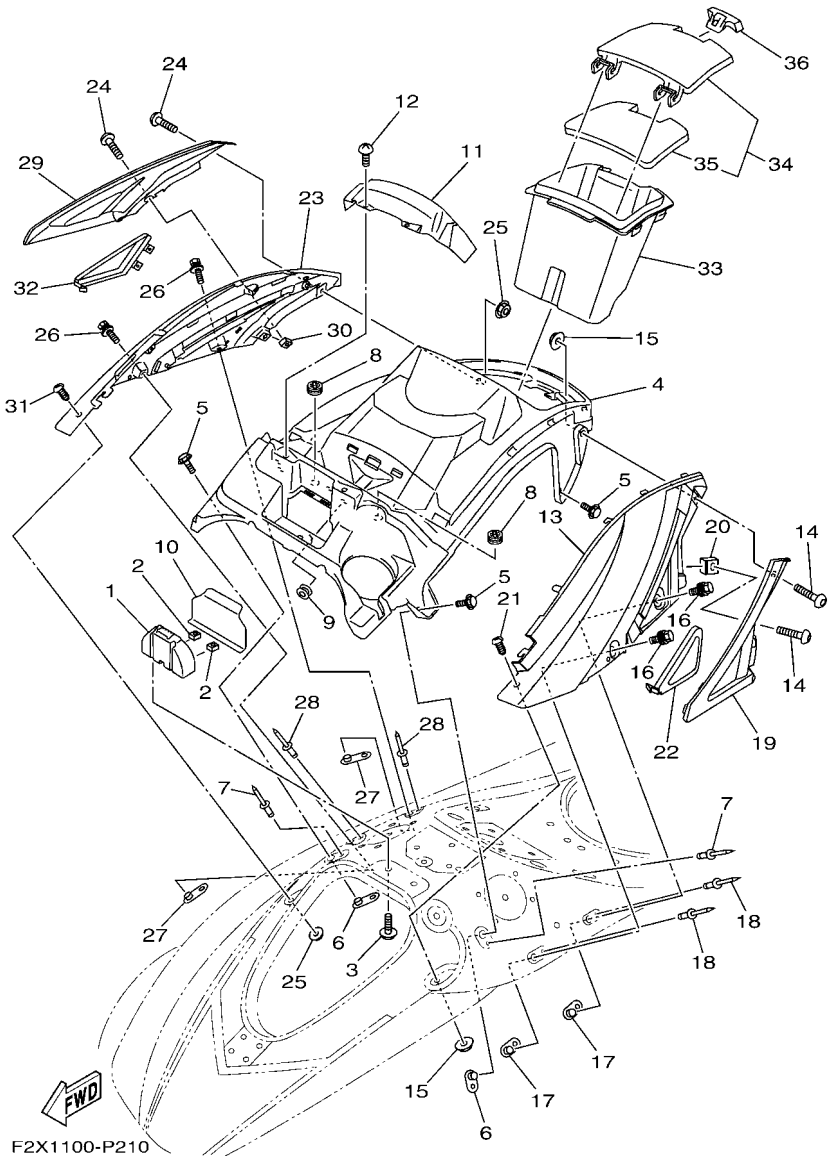

FIG. 20 ENGINE HATCH 1

REF. NO.	PART NO.	DESCRIPTION	F5T6	F5T7				REMARKS
1	F2X–U517F–00	HOOK,LID LOCK	1	1				
2	F4G–U517E–00	NUT	2	2				
3	90119–06880	BOLT, WITH WASHER	2	2				
4	F2X–U5554–00	COVER, CENTER	1	1				
5	90119–06882	BOLT, WITH WASHER	4	4				
6	F2X–U5175–00	PLATE, FIX	2	2				
7	90267–489U1	RIVET,BLIND	2	2				
8	F1X–U828E–01	DAMPER 1	2	2				
9	90480–19800	GROMMET	4	4				
10	F2X–U555B–00	SEAL, COVER CENTER	1	1				
11	F2X–U8262–00	COVER METER	1	1				
12	F2S–U13C1–00	SCREW	2	2				
13	F2X–U377B–10–P6	COVER,SIDE 1 (LNMP)	1					CRUISER FOR GRAY
	F2X–U377B–10–P8	COVER,SIDE 1 (RM9)	1					CRUISER FOR RED
	F2X–U377B–10–PF	COVER,SIDE 1 (SSA)		1				DELUXE FOR BLACK
	F2X–U377B–10–P1	COVER,SIDE 1 (DPBM11)		1				DELUXE FOR BLUE
14	90111–06803	BOLT,HEX. SOCKET BUTTON	2	2				
15	F2N–U142L–00	NUT, LOCK	2	2				
16	90119–06882	BOLT, WITH WASHER	2	2				
17	F2X–U5175–00	PLATE, FIX	2	2				
18	90267–489U1	RIVET,BLIND	2	2				
19	F3P–U377F–40	ORNAMENT, SIDE LH	1					CRUISER FOR GRAY
	F3P–U377F–20	ORNAMENT, SIDE LH	1					CRUISER FOR RED
	F3P–U377F–40	ORNAMENT, SIDE LH		1				DELUXE
20	F4G–U517E–00	NUT	1	1				
21	F2N–67823–10	SCREW	1	1				
22	F2X–U377H–00	INNER, COVER SIDE 1	1					CRUISER

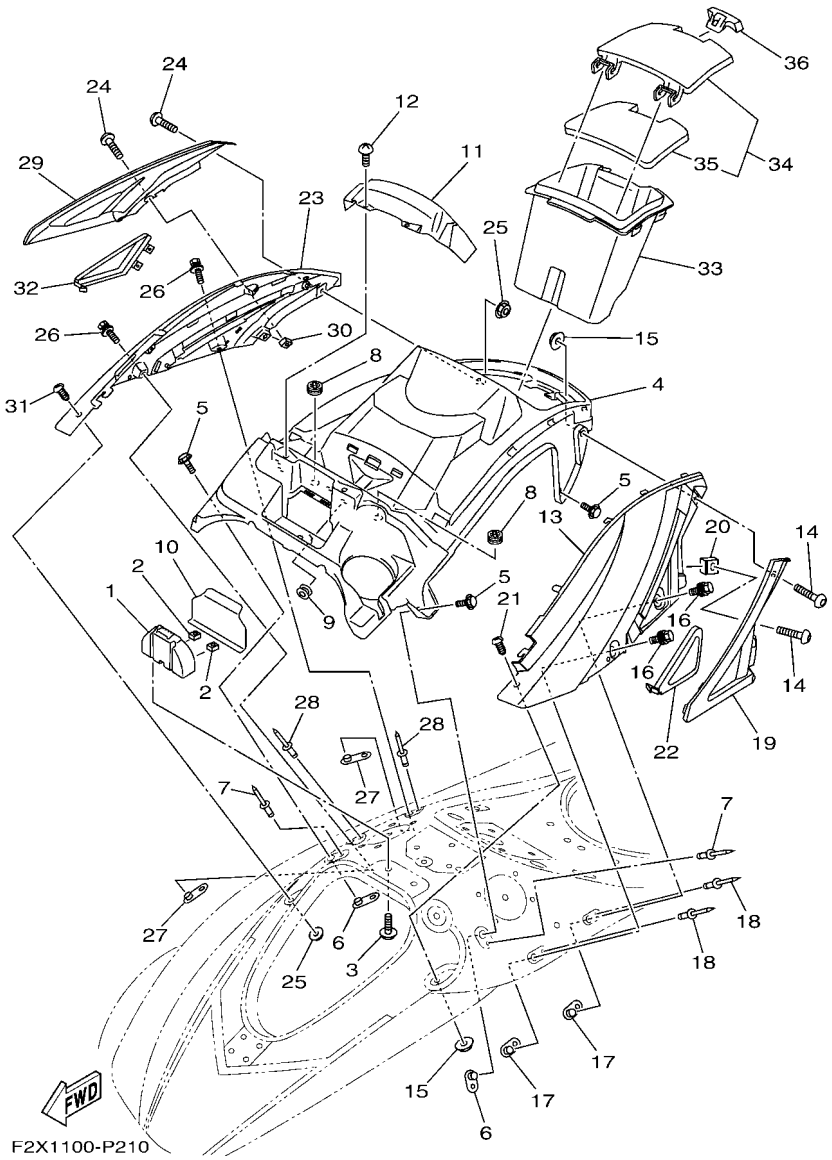

FIG. 20 ENGINE HATCH 1

REF. NO.	PART NO.	DESCRIPTION	F5T6	F5T7				REMARKS
22	F2X–U377H–00	INNER, COVER SIDE 1		1				DELUXE FOR BLACK
	F2X–U377H–10	INNER, COVER SIDE 1		1				DELUXE FOR BLUE
23	F2X–U377C–10–P6	COVER,SIDE 2 (LNMP)	1					CRUISER FOR GRAY
	F2X–U377C–10–P8	COVER,SIDE 2 (RM9)	1					CRUISER FOR RED
	F2X–U377C–10–PF	COVER,SIDE 2 (SSA)		1				DELUXE FOR BLACK
	F2X–U377C–10–P1	COVER,SIDE 2 (DPBM11)		1				DELUXE FOR BLUE
24	90111–06803	BOLT,HEX. SOCKET BUTTON	2	2				
25	F2N–U142L–00	NUT, LOCK	2	2				
26	90119–06882	BOLT, WITH WASHER	2	2				
27	F2X–U5175–00	PLATE, FIX	2	2				
28	90267–489U1	RIVET,BLIND	2	2				
29	F3P–U377G–40	ORNAMENT, SIDE RH	1					CRUISER FOR GRAY
	F3P–U377G–20	ORNAMENT, SIDE RH	1					CRUISER FOR RED
	F3P–U377G–40	ORNAMENT, SIDE RH		1				DELUXE
30	F4G–U517E–00	NUT	1	1				
31	F2N–67823–10	SCREW	1	1				
32	F2X–U377J–00	INNER, COVER SIDE 2	1					CRUISER
	F2X–U377J–00	INNER, COVER SIDE 2		1				DELUXE FOR BLACK
	F2X–U377J–10	INNER, COVER SIDE 2		1				DELUXE FOR BLUE
33	F2X–U516P–00	BOX GLOVE	1	1				
34	F2X–U1708–00	GLOVE BOX HATCH ASSY.	1	1				
35	F2X–U519D–00	.PACKING CASE	1	1				
36	F2X–U2875–00	LOCK	1	1				

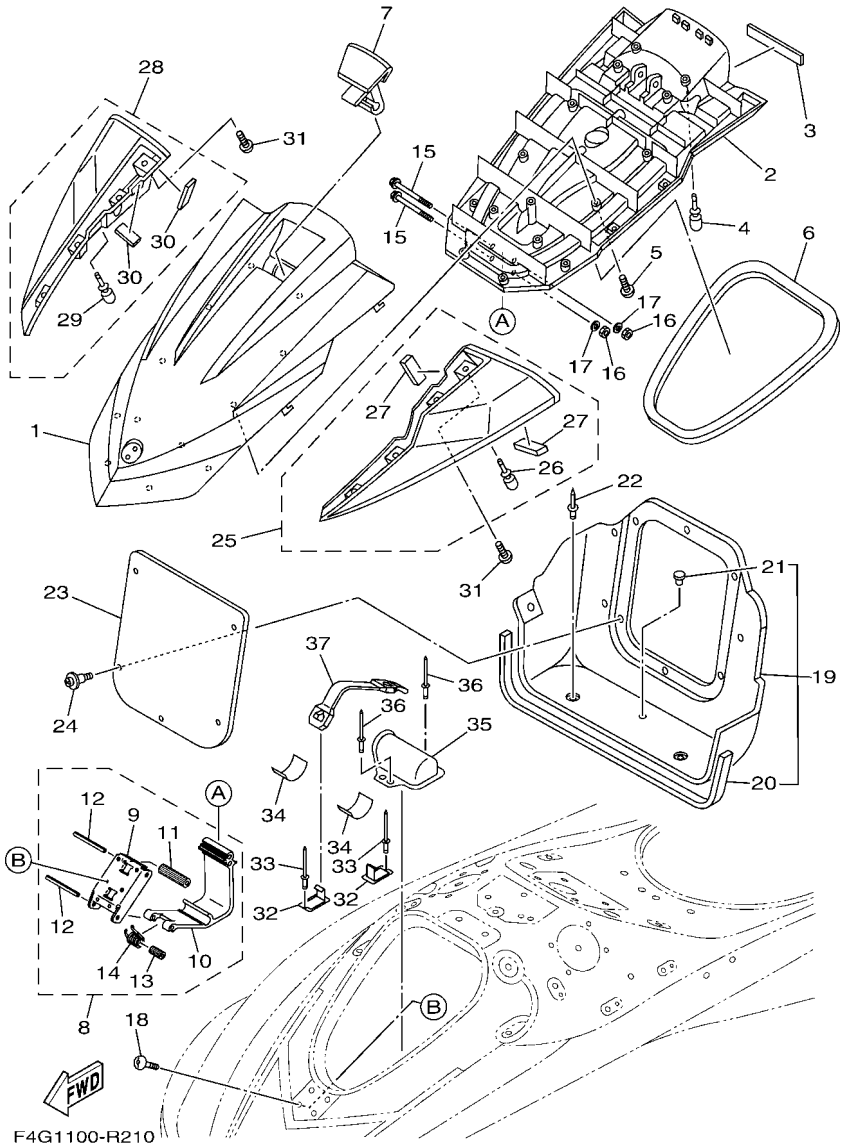

FIG. 21 ENGINE HATCH 2

REF. NO.	PART NO.	DESCRIPTION	F5T6	F5T7				REMARKS
1	F2X–U517B–10–P8	LID, ENGINE ROOM (MVPBM3)	1					CRUISER FOR GRAY
	F2X–U517B–10–P6	LID, ENGINE ROOM (RM9)	1					CRUISER FOR RED
	F2X–U517B–10–P9	LID, ENGINE ROOM (MLGS2)		1				DELUXE FOR BLACK
	F2X–U517B–10–P4	LID, ENGINE ROOM (VLGS6)		1				DELUXE FOR BLUE
2	F2X–U519G–10	INNER, ENGINE HATCH	1	1				
3	F2C–U515D–00	DAMPER 1	1	1				
4	F1W–U3768–01	CUSHION, RUBBER	2	2				
5	F2S–U13C1–00	SCREW	15	15				
6	F2N–U2663–01	PACKING 1	1	1				
7	F2X–U517C–01	LOCK, LID	1	1				
8	F2X–U515A–01	HINGE ASSY.	1	1				
9	F1K–U518E–04	.PLATE, HINGE LID	1	1				
10	F1K–U517D–05	.HINGE, LID	1	1				
11	F2X–U135C–00	.ROLLER, DETENT	1	1				
12	F1K–U517R–01	.PIN, HINGE	2	2				
13	F1K–U471E–03	.SPACER 1	1	1				
14	F1K–U283B–02	.SPRING, TORSION	1	1				
15	90105–06826	BOLT, FLANGE	2	2				
16	9572R–06300	NUT, NYLON	2	2				
17	9299R–06200	WASHER	2	2				
18	F4G–U7823–01	SCREW	4	4				
19	F2X–U475B–00	LOCKER,BOW	1	1				
20	F2N–U266C–01	.PACKING 4	1	1				
21	90605–502U1	.PLUG, BLIND	1	1				
22	90269–08801	RIVET	4	4				
23	F2S–U475F–00	PLATE, LOKER BOW	1	1				
24	90269–08801	RIVET	5	5				

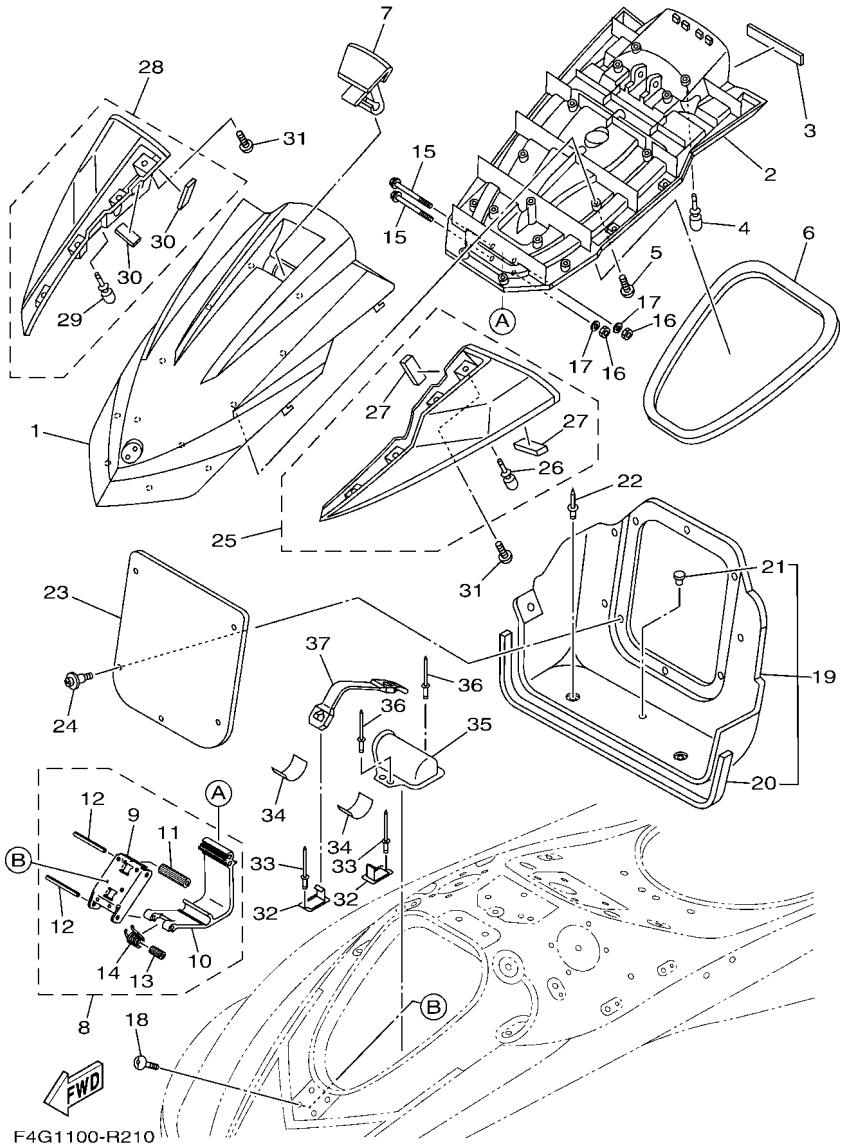

FIG. 21 ENGINE HATCH 2

REF. NO.	PART NO.	DESCRIPTION	F5T6	F5T7				REMARKS
25	F2X–U590D–70	MIRROR ASSY. 1	1					CRUISER FOR GRAY
	F2X–U590D–30	MIRROR ASSY. 1	1					CRUISER FOR RED
	F2X–U590D–70	MIRROR ASSY. 1		1				DELUXE
26	F1W–U3768–01	.CUSHION, RUBBER	1	1				
27	F1K–U266B–00	.PACKING 3	2	2				
28	F2X–U590E–70	MIRROR ASSY. 2	1					CRUISER FOR GRAY
	F2X–U590E–30	MIRROR ASSY. 2	1					CRUISER FOR RED
	F2X–U590E–70	MIRROR ASSY. 2		1				DELUXE
29	F1W–U3768–01	.CUSHION, RUBBER	1	1				
30	F1K–U266B–00	.PACKING 3	2	2				
31	F2X–U13C1–00	SCREW	8	8				
32	F1K–U5772–04	HOOK A	2	2				
33	90267–489U1	RIVET,BLIND	2	2				
34	F1K–U759C–00	MAT 2	2	2				
35	F2X–U5983–00	BOX, FIRE EXTINGUISHER	1	1				
36	90267–48802	RIVET, BLIND	2	2				
37	F2P–U828K–00	BAND 1	1	1				

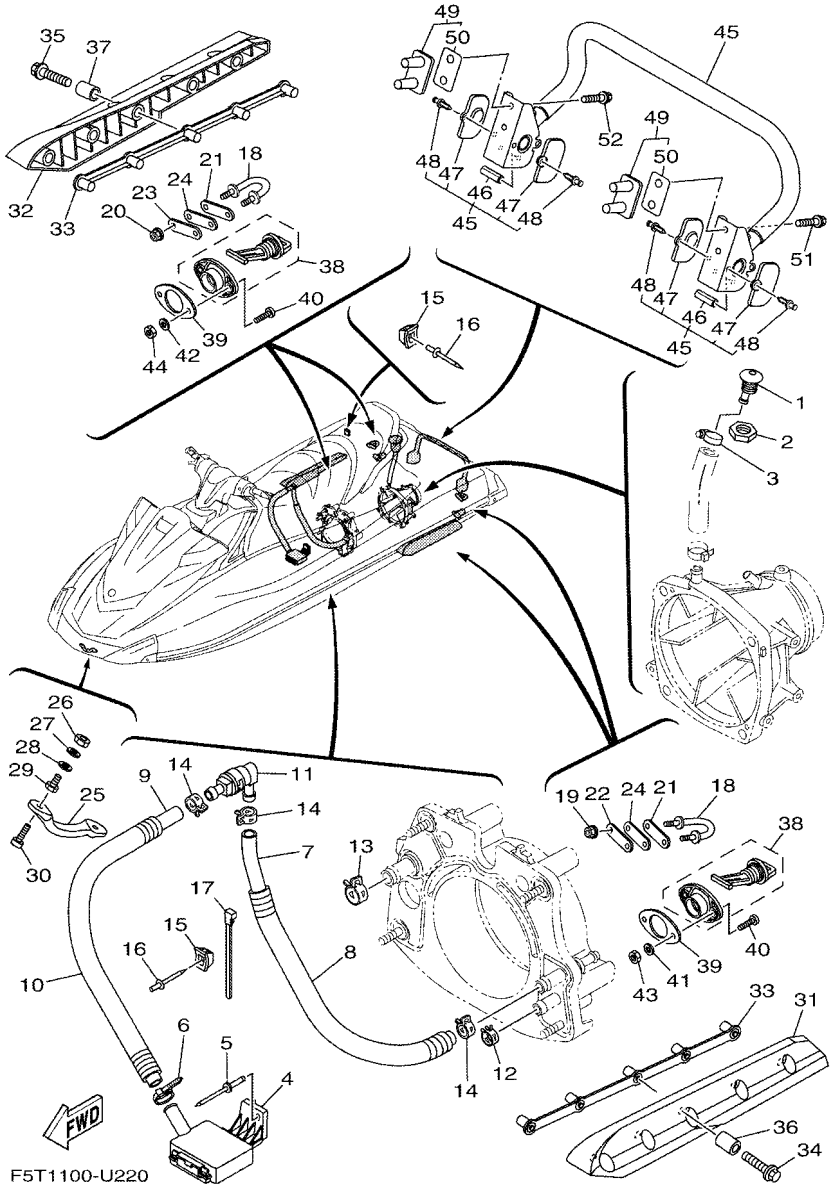

FIG. 22 HULL & DECK

REF. NO.	PART NO.	DESCRIPTION	F5T6	F5T7				REMARKS
1	F1W–U269B–00	SPOUT	1	1				
2	EU0–61652–00	NUT	1	1				
3	90601–118UF	BAND, HOSE 18	1	1				
4	F1B–U761D–02	STRAINER, BILGE	1	1				
5	90267–489U8	RIVET, BLIND	1	1				
6	90465–11829	CLAMP	1	1				
7	6EY–U771G–00	HOSE 2	1	1				
8	6EY–U773E–00	TUBE,2	1	1				
9	90445–20804	HOSE (L860)	1	1				
10	6EX–U773E–00	TUBE,2	1	1				
11	68N–5112T–00	JOINT, HOSE	1	1				
12	90467–200A3	CLIP	1	1				
13	90467–240A3	CLIP	1	1				
14	90467–180A5	CLIP	3	3				
15	F1W–U828M–00	BASE, CLAMP	2	2				
16	90267–489U6	RIVET, BLIND	2	2				
17	90464–32801	CLAMP	1	1				
18	F2N–U1628–02	STERN EYE	2	2				
19	9572R–08300	NUT, FLANGE	2	2				
20	9572R–08300	NUT, FLANGE	2	2				
21	GP7–U4953–10	PLATE A	2	2				
22	GP7–U4953–10	PLATE A	1	1				
23	GP7–U4953–10	PLATE A	1	1				
24	F1B–U1653–02	PACKING	2	2				
25	F1K–61624–00	BOW EYE 1	1	1				
26	99780–12600	NUT.HEX.(COARS)	2	2				
27	92990–12200	WASHER, PLAIN	2	2				

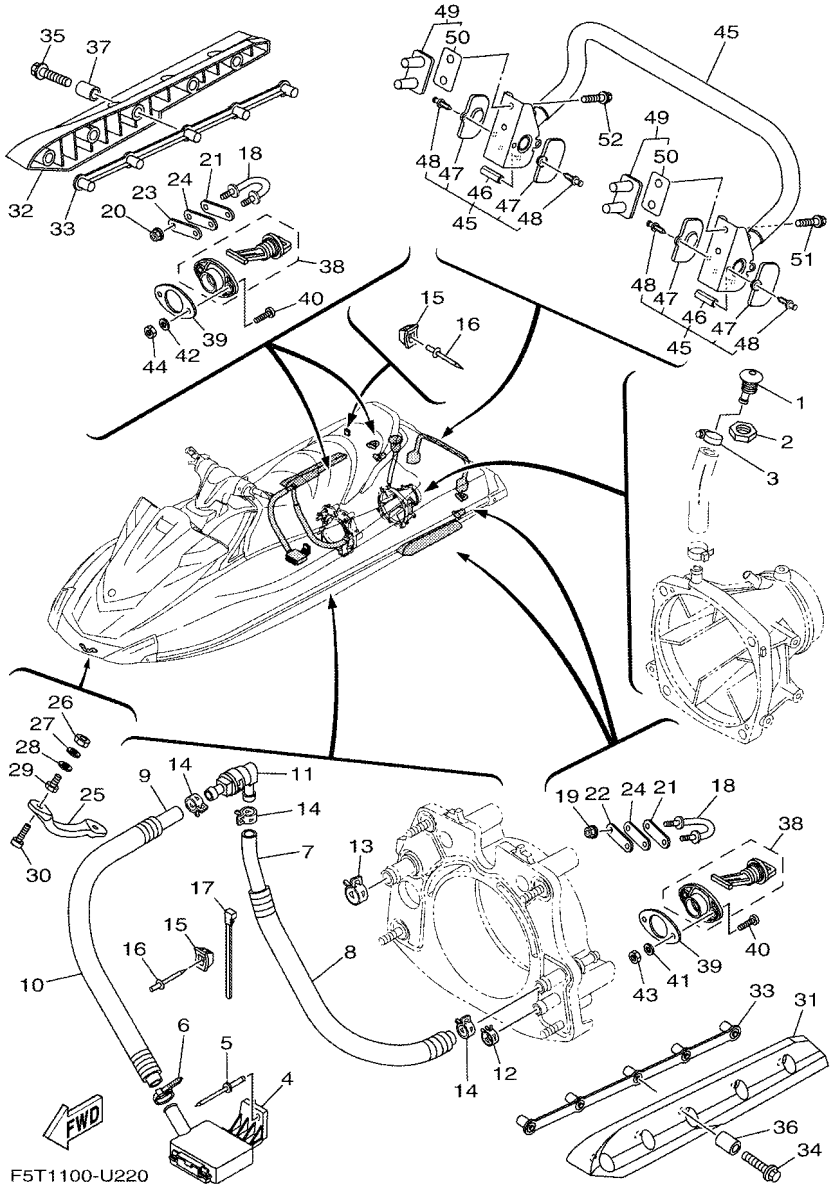

FIG. 22 HULL & DECK

REF. NO.	PART NO.	DESCRIPTION	F5T6	F5T7				REMARKS
28	F0X–61637–00	WASHER	2	2				
29	F0X–61652–00	NUT (BOLT/NUT)	2	2				
30	90110–06040	BOLT, HEXAGON SOCKET HEAD	2	2				
31	F1S–U883N–01	STABILIZER LH	1	1				BLACK
32	F1S–U883P–01	STABILIZER RH	1	1				BLACK
33	F1X–U883T–01	BRACKET,STABILIZER	2	2				
34	90105–08860	BOLT, FLANGE	5	5				
35	90105–08860	BOLT, FLANGE	5	5				
36	F2N–U8169–00	SPACER	5	5				
37	F2N–U8169–00	SPACER	5	5				
38	F1S–U2280–02	DRAIN PLUG ASSY.	2	2				
39	F1S–U2285–00	PACKING, DRAIN	2	2				
40	9788R–05025	SCREW, PAN HEAD	4	4				
41	9299R–05200	WASHER	2	2				
42	9299R–05200	WASHER	2	2				
43	9572R–05300	NUT, FLANGE	2	2				
44	9572R–05300	NUT, FLANGE	2	2				
45	F2X–U278A–00	LADDER, STEP ASSY	1	1				
46	F1W–U771H–00	.SLEEVE 1	2	2				
47	F2C–U377H–00	.INNER, COVER SIDE 1	4	4				
48	F2C–U1314–00	.PIN	4	4				
49	F2S–U278F–00	BRACKET, LADDER LH	2	2				
50	F2S–U278H–00	.PACKING, BRKT. 1	1	1				
51	90119–08861	BOLT, WITH WASHER	2	2				
52	90119–08861	BOLT, WITH WASHER	2	2				

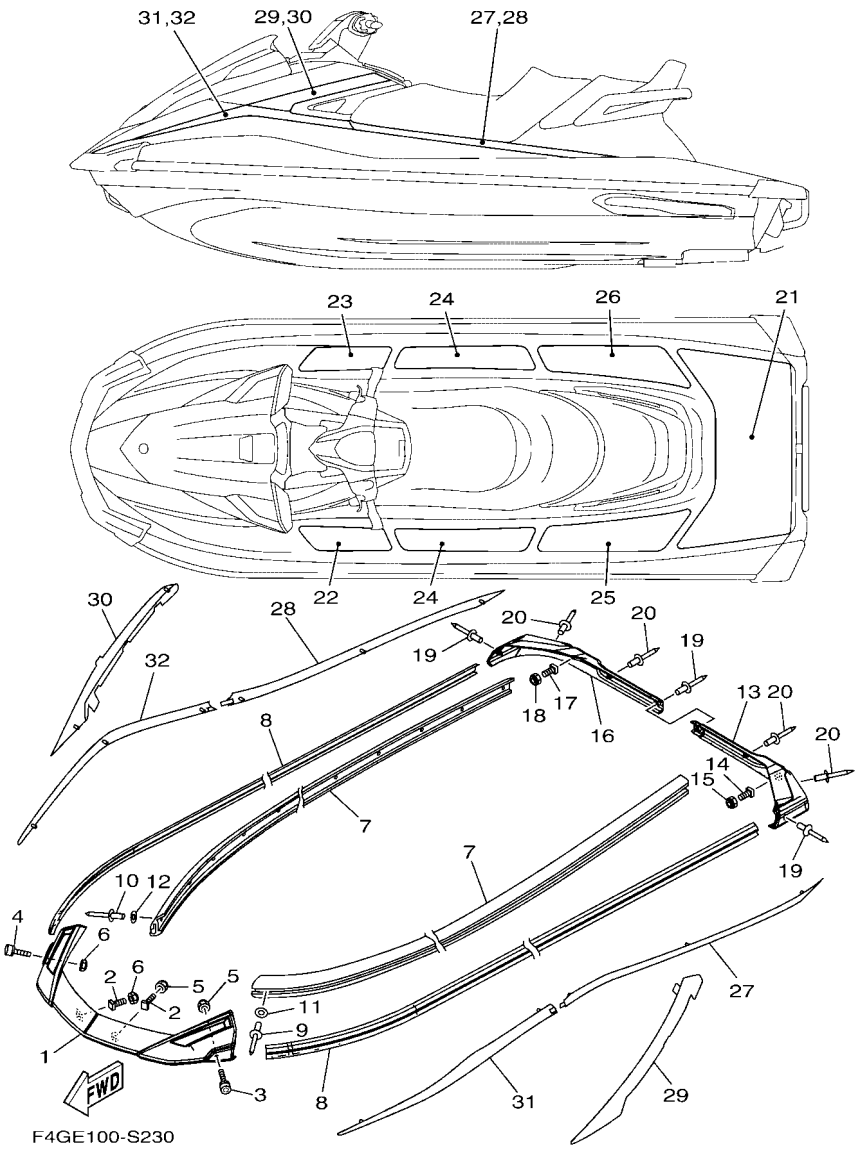

FIG. 23 GUNWALE & MAT

REF. NO.	PART NO.	DESCRIPTION	F5T6	F5T7				REMARKS
1	F2X–U2511–10	GUNWALE, BOW (YB)	1					CRUISER FOR GRAY
	F2X–U2511–20	GUNWALE, BOW (PURW)	1					CRUISER FOR RED
	F2X–U2511–00	GUNWALE, BOW (DGS1)		1				DELUXE FOR BLACK
	F2X–U2511–20	GUNWALE, BOW (PURW)		1				DELUXE FOR BLUE
2	F1W–U491K–00	BOLT, SPECIAL	2	2				
3	90110–06191	BOLT, HEXAGON SOCKET HEAD	1	1				
4	90110–06191	BOLT, HEXAGON SOCKET HEAD	1	1				
5	F2N–U142L–00	NUT, LOCK	2	2				
6	F2N–U142L–00	NUT, LOCK	2	2				
7	F2X–U2512–10	GUNWALE, SIDE (YB)	2					CRUISER FOR GRAY
	F2X–U2512–20	GUNWALE, SIDE (PURW)	2					CRUISER FOR RED
	F2X–U2512–00	GUNWALE, SIDE (DGS1)		2				DELUXE FOR BLACK
	F2X–U2512–20	GUNWALE, SIDE (PURW)		2				DELUXE FOR BLUE
8	F2X–U2519–80	INNER,GUNWALE (BLUE)	2					CRUISER FOR GRAY
	F2X–U2519–40	INNER,GUNWALE (RED)	2					CRUISER FOR RED
	F2X–U2519–90	INNER,GUNWALE (GREEN)		2				DELUXE FOR BLACK
	F2X–U2519–10	INNER,GUNWALE (YB)		2				DELUXE FOR BLUE
9	90267–489U8	RIVET, BLIND	15	15				
10	90267–489U8	RIVET, BLIND	15	15				
11	9299R–05200	WASHER	15	15				
12	9299R–05200	WASHER	15	15				
13	F2X–U251D–10	GUNWALE, STERN 1 (YB)	1					CRUISER FOR GRAY
	F2X–U251D–20	GUNWALE, STERN 1 (PURW)	1					CRUISER FOR RED
	F2X–U251D–00	GUNWALE, STERN 1 (DGS1)		1				DELUXE FOR BLACK
	F2X–U251D–20	GUNWALE, STERN 1 (PURW)		1				DELUXE FOR BLUE
14	F1W–U491K–00	BOLT, SPECIAL	1	1				
15	F2N–U142L–00	NUT, LOCK	1	1				

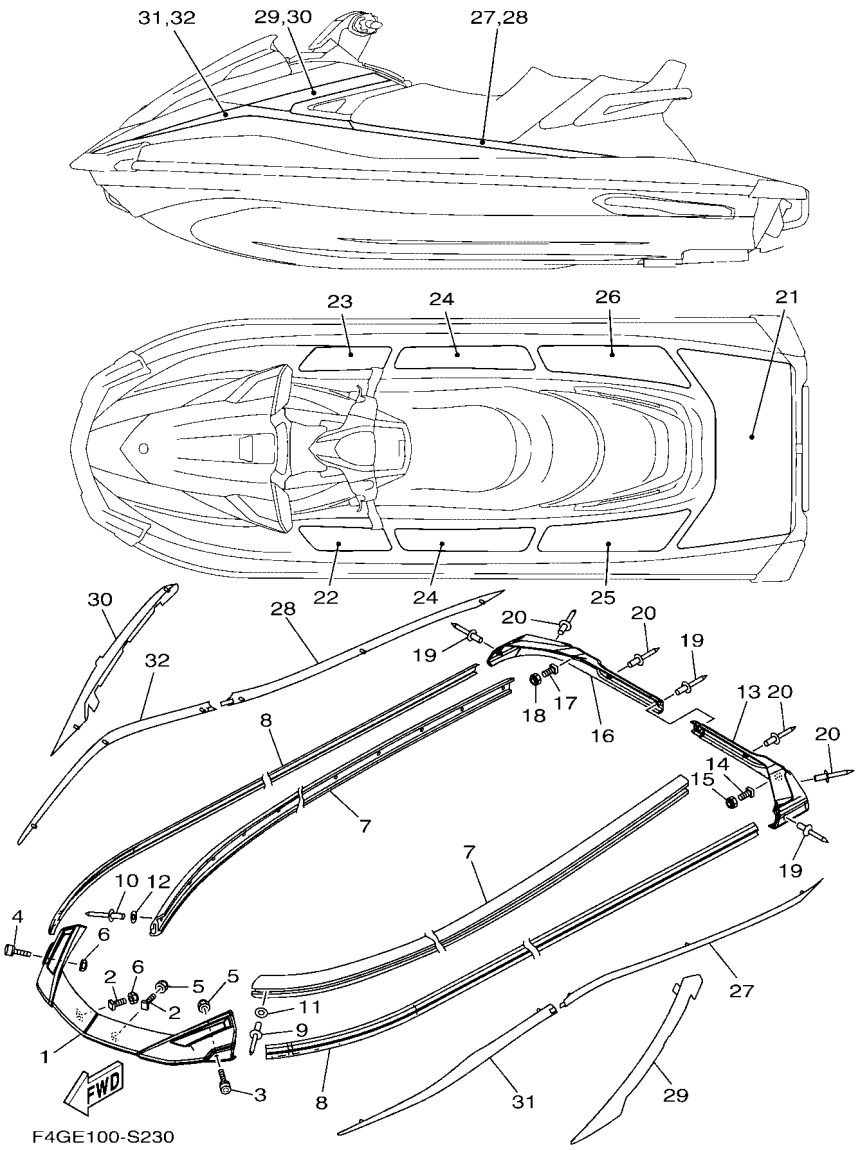

FIG. 23 GUNWALE & MAT

REF. NO.	PART NO.	DESCRIPTION	F5T6	F5T7				REMARKS
16	F2X–U251E–10	GUNWALE, STERN 2 (YB)	1					CRUISER FOR GRAY
	F2X–U251E–20	GUNWALE, STERN 2 (PURW)	1					CRUISER FOR RED
	F2X–U251E–00	GUNWALE, STERN 2 (DGS1)		1				DELUXE FOR BLACK
	F2X–U251E–20	GUNWALE, STERN 2 (PURW)		1				DELUXE FOR BLUE
17	F1W–U491K–00	BOLT, SPECIAL	1	1				
18	F2N–U142L–00	NUT, LOCK	1	1				
19	90267–48825	RIVET, BLIND	3	3				
20	90267–48825	RIVET, BLIND	4	4				
21	F2X–U3581–40	MAT, UPPER	1					CRUSIER FOR GRAY
	F2X–U3581–01	MAT, UPPER	1					CRUISER FOR RED
	F2X–U3581–01	MAT, UPPER		1				DELUXE
22	F2X–U351H–40	MAT, STEP 1	1					CRUISER FOR GRAY
	F2X–U351H–00	MAT, STEP 1	1					CRUISER FOR RED
	F2X–U351H–00	MAT, STEP 1		1				DELUXE
23	F2X–U351J–40	MAT, STEP 2	1					CRUISER FOR GRAY
	F2X–U351J–00	MAT, STEP 2	1					CRUISER FOR RED
	F2X–U351J–00	MAT, STEP 2		1				DELUXE
24	F2X–U351K–40	MAT, STEP 3	2					CRUISER FOR GRAY
	F2X–U351K–00	MAT, STEP 3	2					CRUISER FOR RED
	F2X–U351K–00	MAT, STEP 3		2				DELUXE
25	F2X–U351M–40	MAT, STEP 4	1					CRUISER FOR GRAY
	F2X–U351M–00	MAT, STEP 4	1					CRUISER FOR RED
	F2X–U351M–00	MAT, STEP 4		1				DELUXE
26	F2X–U351N–40	MAT, STEP 5	1					CRUISER FOR GRAY
	F2X–U351N–00	MAT, STEP 5	1					CRUISER FOR RED
	F2X–U351N–00	MAT, STEP 5		1				DELUXE
27	F2X–U89A8–60	ORNAMENT, STERN LH (BLUE)	1					CRUISER FOR GRAY

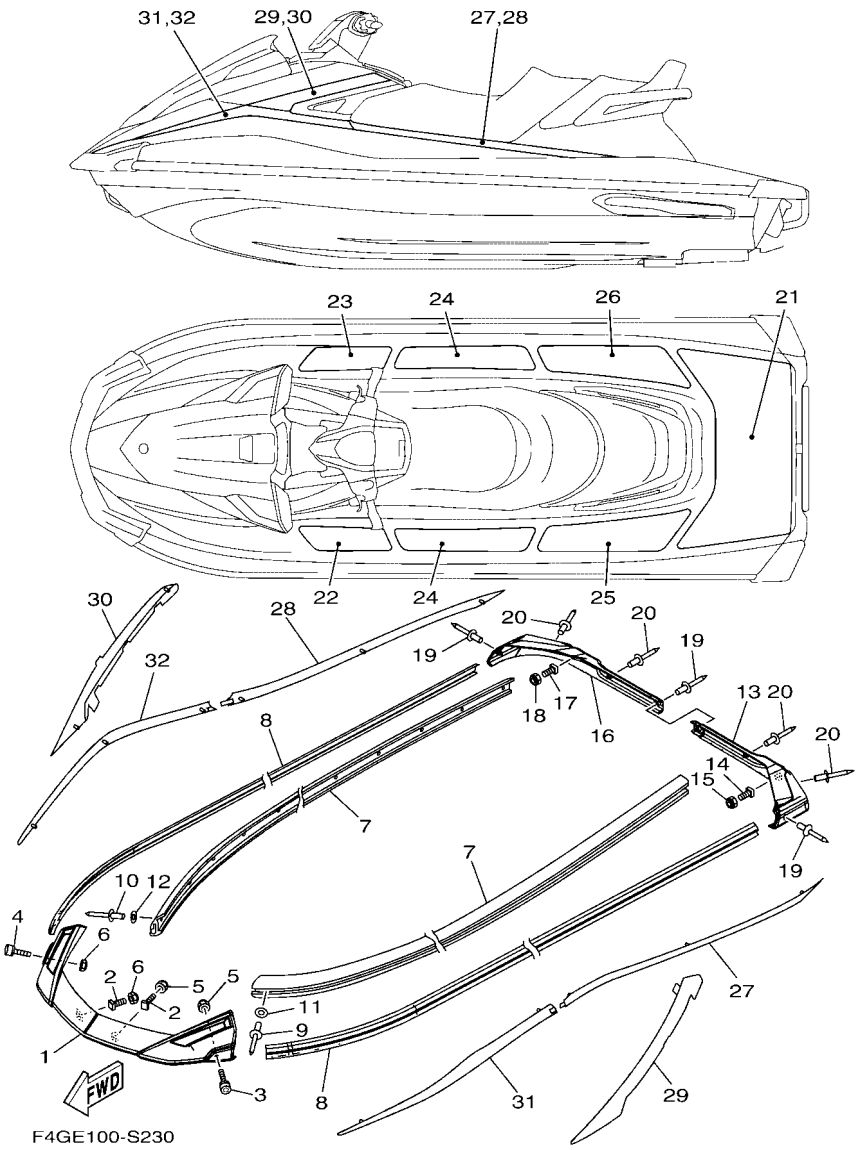

FIG. 23 GUNWALE & MAT

REF. NO.	PART NO.	DESCRIPTION	F5T6	F5T7				REMARKS
27	F2X–U89A8–00	ORNAMENT, STERN LH (YB)	1					CRUISER FOR RED
	F2X–U89A8–70	ORNAMENT, STERN LH (GREEN)		1				DELUXE FOR BLACK
	F2X–U89A8–80	ORNAMENT, STERN LH (YELLOW)		1				DELUXE FOR BLUE
28	F2X–U89A9–60	ORNAMENT, STERN RH (BLUE)	1					CRUISER FOR GRAY
	F2X–U89A9–00	ORNAMENT, STERN RH (YB)	1					CRUISER FOR RED
	F2X–U89A9–70	ORNAMENT, STERN RH (GREEN)		1				DELUXE FOR BLACK
	F2X–U89A9–80	ORNAMENT, STERN RH (YELLOW)		1				DELUXE FOR BLUE
29	F2X–U89AA–60	ORNAMENT, MIDDLE LH (BLUE)	1					CRUISER FOR GRAY
	F2X–U89AA–00	ORNAMENT, MIDDLE LH (YB)	1					CRUISER FOR RED
	F2X–U89AA–70	ORNAMENT, MIDDLE LH (GREEN)		1				DELUXE FOR BLACK
	F2X–U89AA–80	ORNAMENT, MIDDLE LH (YELLOW)		1				DELUXE FOR BLUE
30	F2X–U89AB–60	ORNAMENT, MIDDLE RH (BLUE)	1					CRUISER FOR GRAY
	F2X–U89AB–00	ORNAMENT, MIDDLE RH (YB)	1					CRUISER FOR RED
	F2X–U89AB–70	ORNAMENT, MIDDLE RH (GREEN)		1				DELUXE FOR BLACK
	F2X–U89AB–80	ORNAMENT, MIDDLE RH (YELLOW)		1				DELUXE FOR BLUE
31	F2X–U89AC–60	ORNAMENT, BOW LH (BLUE)	1					CRUISER FOR GRAY
	F2X–U89AC–00	ORNAMENT, BOW LH (YB)	1					CRUISER FOR RED
	F2X–U89AC–70	ORNAMENT, BOW LH (GREEN)		1				DELUXE FOR BLACK
	F2X–U89AC–80	ORNAMENT, BOW LH (YELLOW)		1				DELUXE FOR BLUE
32	F2X–U89AD–60	ORNAMENT, BOW RH (BLUE)	1					CRUISER FOR GRAY
	F2X–U89AD–00	ORNAMENT, BOW RH (YB)	1					CRUISER FOR RED
	F2X–U89AD–70	ORNAMENT, BOW RH (GREEN)		1				DELUXE FOR BLACK
	F2X–U89AD–80	ORNAMENT, BOW RH (YELLOW)		1				DELUXE FOR BLUE

FIG. 24 VENTILATION

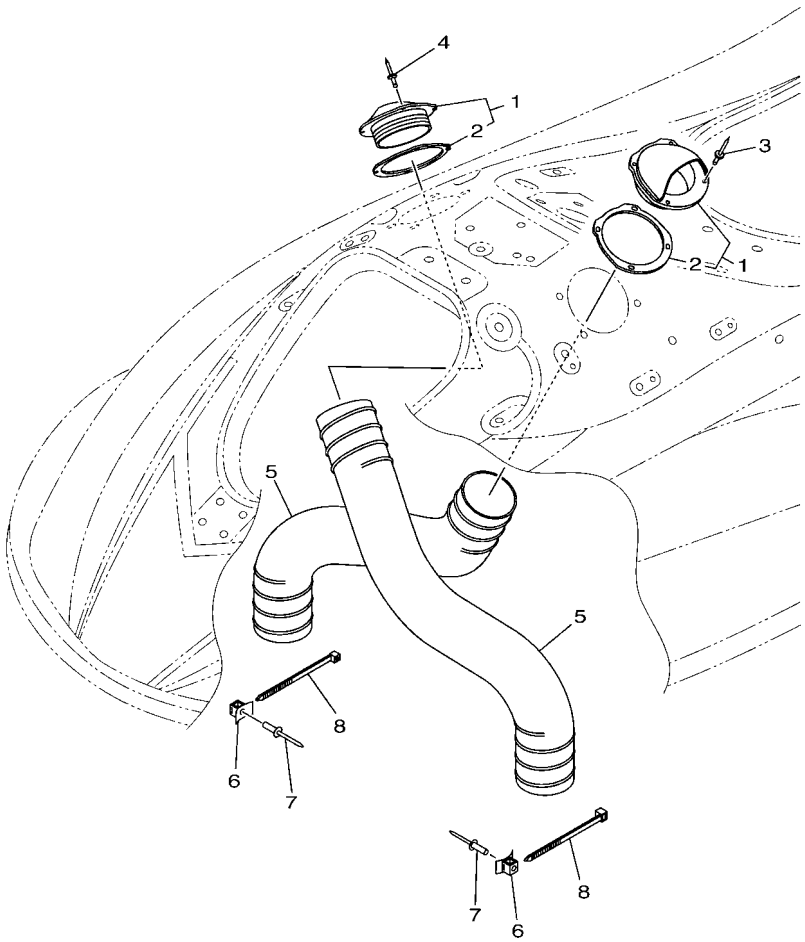

F2X1100-P250

REF. NO.	PART NO.	DESCRIPTION	F5T6	F5T7				REMARKS
1	F2X–U2127–00	BASE, AIR INTAKE	2	2				
2	F2X–U2157–00	.PACKING	1	1				
3	90267–48806	RIVET, BLIND	4	4				
4	90267–48806	RIVET, BLIND	4	4				
5	F2N–U213G–02	HOSE, VENTILATOR 2	2	2				
6	F1W–U828M–00	BASE, CLAMP	2	2				
7	90267–489U6	RIVET, BLIND	2	2				
8	90464–99804	CLAMP	2	2				

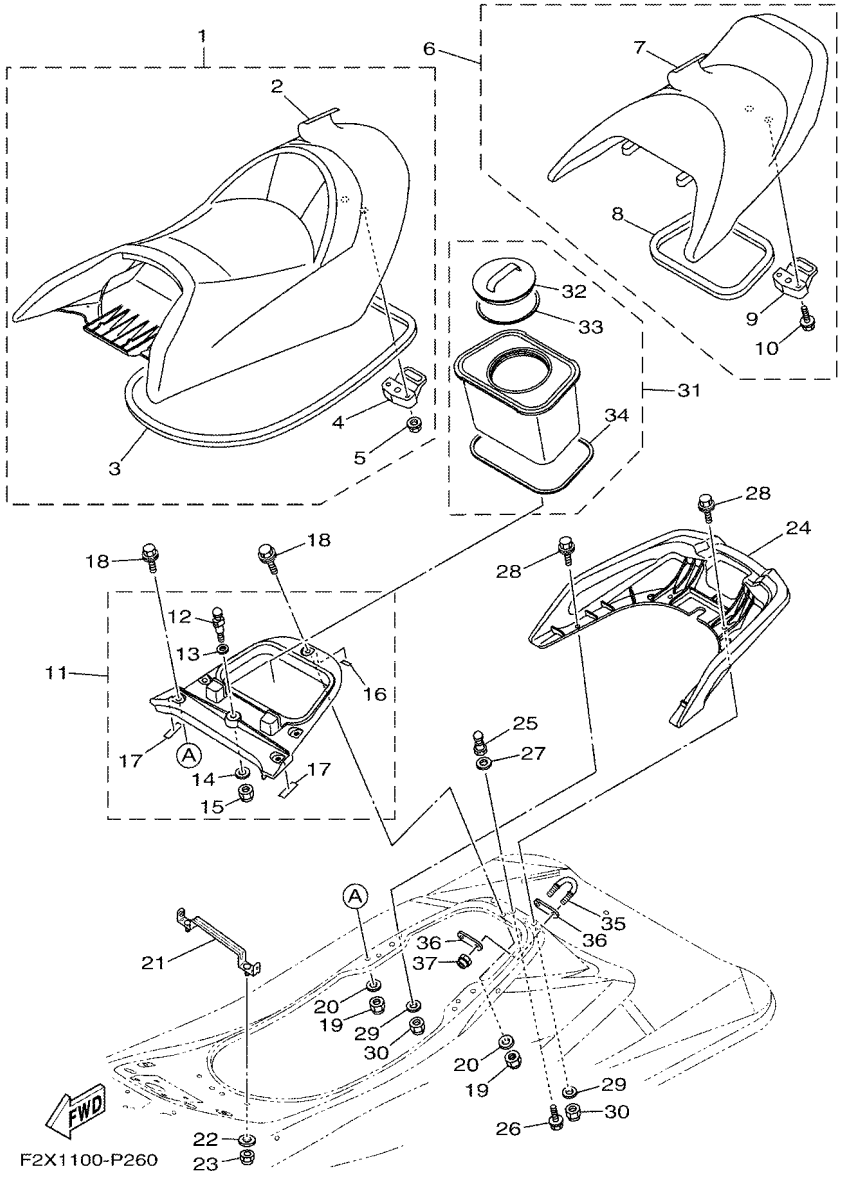

FIG. 25 SEAT & UNDER LOCKER

REF. NO.	PART NO.	DESCRIPTION	F5T6	F5T7				REMARKS
1	F2X–U371A–E0	DOUBLE SEAT ASSY	1					CRUISER FOR GRAY
	F2X–U371A–F0	DOUBLE SEAT ASSY	1					CRUISER FOR RED
	F2X–U371A–G0	DOUBLE SEAT ASSY		1				DELUXE FOR BLACK
	F2X–U371A–H0	DOUBLE SEAT ASSY		1				DELUXE FOR BLUE
2	F2X–U371B–E0	.COVER, SEAT 1	1					CRUISER FOR GRAY
	F2X–U371B–F0	.COVER, SEAT 1	1					CRUISER FOR RED
	F2X–U371B–G0	.COVER, SEAT 1		1				DELUXE FOR BLACK
	F2X–U371B–H0	.COVER, SEAT 1		1				DELUXE FOR BLUE
3	F1W–U2664–01	.PACKING	1	1				
4	F2C–U3850–00	.SEAT LOCK ASSY	1	1				
5	90119–069UP	.BOLT, WITH WASHER	2	2				
6	F2X–U372A–E0	SINGLE SEAT ASSY	1					CRUISER FOR GRAY
	F2X–U372A–F0	SINGLE SEAT ASSY	1					CRUISER FOR RED
	F2X–U372A–G0	SINGLE SEAT ASSY		1				DELUXE FOR BLACK
	F2X–U372A–H0	SINGLE SEAT ASSY		1				DELUXE FOR BLUE
7	F2X–U372B–E0	.COVER, SEAT	1					CRUISER FOR GRAY
	F2X–U372B–F0	.COVER, SEAT	1					CRUISER FOR RED
	F2X–U372B–G0	.COVER, SEAT		1				DELUXE FOR BLACK
	F2X–U372B–H0	.COVER, SEAT		1				DELUXE FOR BLUE
8	F2C–U266D–01	.PACKING 5	1	1				
9	F1B–U3850–02	.SEAT LOCK ASSY	1	1				
10	90119–069UP	.BOLT, WITH WASHER	2	2				
11	F2S–U890L–05	DECK BEAM ASSY	1	1				
12	GH1–U3774–00	.PIN	1	1				
13	90201–109U6	.WASHER, PLATE	1	1				
14	9299R–10200	.WASHER	1	1				
15	9572R–10300	.NUT, NYLON	1	1				

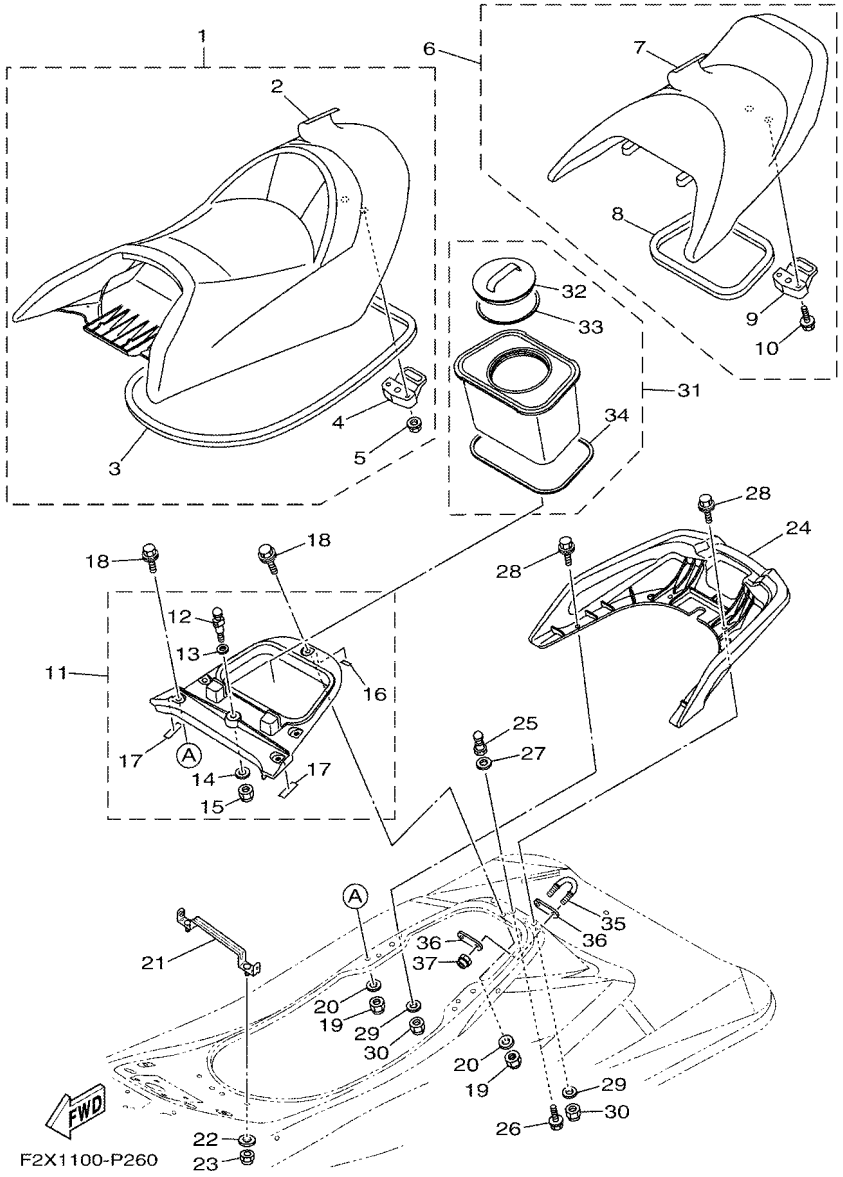

FIG. 25 SEAT & UNDER LOCKER

REF. NO.	PART NO.	DESCRIPTION	F5T6	F5T7				REMARKS
16	F2S–U375E–00	.PACKING 1	1	1				
17	F2S–U8244–00	.PACKING	2	2				
18	90119–08828	BOLT, WITH WASHER	5	5				
19	9572R–08300	NUT, FLANGE	5	5				
20	9299R–08200	WASHER	5	5				
21	F2X–U378C–00	STAY, SEAT 1	1	1				
22	90201–099U3	WASHER, PLATE	2	2				
23	9572R–08300	NUT, FLANGE	2	2				
24	F2X–U271B–10	GRIP, HAND	1	1				
25	F1K–U3774–00	PIN	1	1				
26	90119–10804	BOLT, WITH WASHER	1	1				
27	9299R–10200	WASHER	1	1				
28	90119–08828	BOLT, WITH WASHER	4	4				
29	9299R–08200	WASHER	4	4				
30	9572R–08300	NUT, FLANGE	4	4				
31	F2X–U591A–01	CASE ASSY 1	1	1				
32	F2C–U591C–00	.CAP,CASE	1	1				
33	F2C–U591D–01	.PACKING,CASE	1	1				
34	F2C–U266E–00	.PACKING,6	1	1				
35	F2N–U1628–02	STERN EYE	1	1				
36	GP7–U4953–10	PLATE A	2	2				
37	9572R–08300	NUT, FLANGE	2	2				

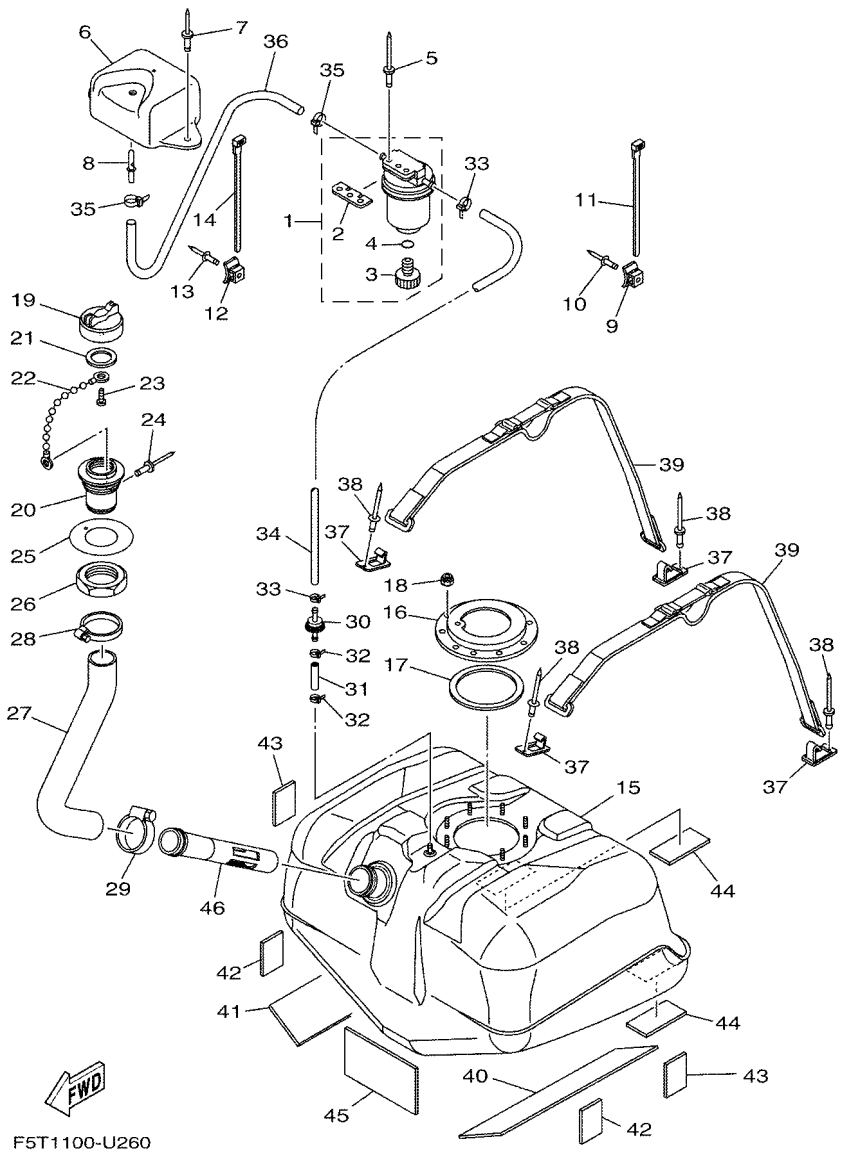

FIG. 26 FUEL TANK

REF. NO.	PART NO.	DESCRIPTION	F5T6	F5T7				REMARKS
1	F2F–6214A–00	FILTER, VENT ASSY	1	1				
2	EW2–62142–00	.PLATE, FILTER	1	1				
3	70R–24543–00	.PLUG, DRAIN	1	1				
4	70R–24489–00	.O-RING	1	1				
5	90267–489U2	RIVET, BLIND	2	2				
6	GP7–62159–02	SOCKET, VENTILATION	1	1				
7	90267–489U6	RIVET, BLIND	2	2				
8	F1G–62149–00	PIPE, VENTILATION	1	1				
9	F1W–U828M–00	BASE, CLAMP	1	1				
10	90267–489U6	RIVET, BLIND	1	1				
11	90464–32801	CLAMP	1	1				
12	F1W–U828M–00	BASE, CLAMP	1	1				
13	90267–489U6	RIVET, BLIND	1	1				
14	90464–32801	CLAMP	1	1				
15	F2S–U7711–02	TANK, FUEL	1	1				
16	F1B–U7773–00	RING	1	1				
17	F1B–67747–00	PACKING, SEAL	1	1				
18	9572R–06300	NUT, NYLON	9	9				
19	F2X–U7831–00	CAP, FUEL FILLER	1	1				
20	F2X–U7833–00	SOCKET	1	1				
21	GP7–U7832–01	PACKING	1	1				
22	GP7–U7835–00	CHAIN BALL	1	1				
23	90169–049U1	TAPPING SCREW	1	1				
24	90267–329UR	RIVET, BLIND	1	1				
25	GP7–U7834–10	PACKING FUEL FILLER	1	1				
26	GP7–U783F–00	NUT, FUEL FILLER	1	1				
27	F2X–U7844–01	HOSE	1	1				

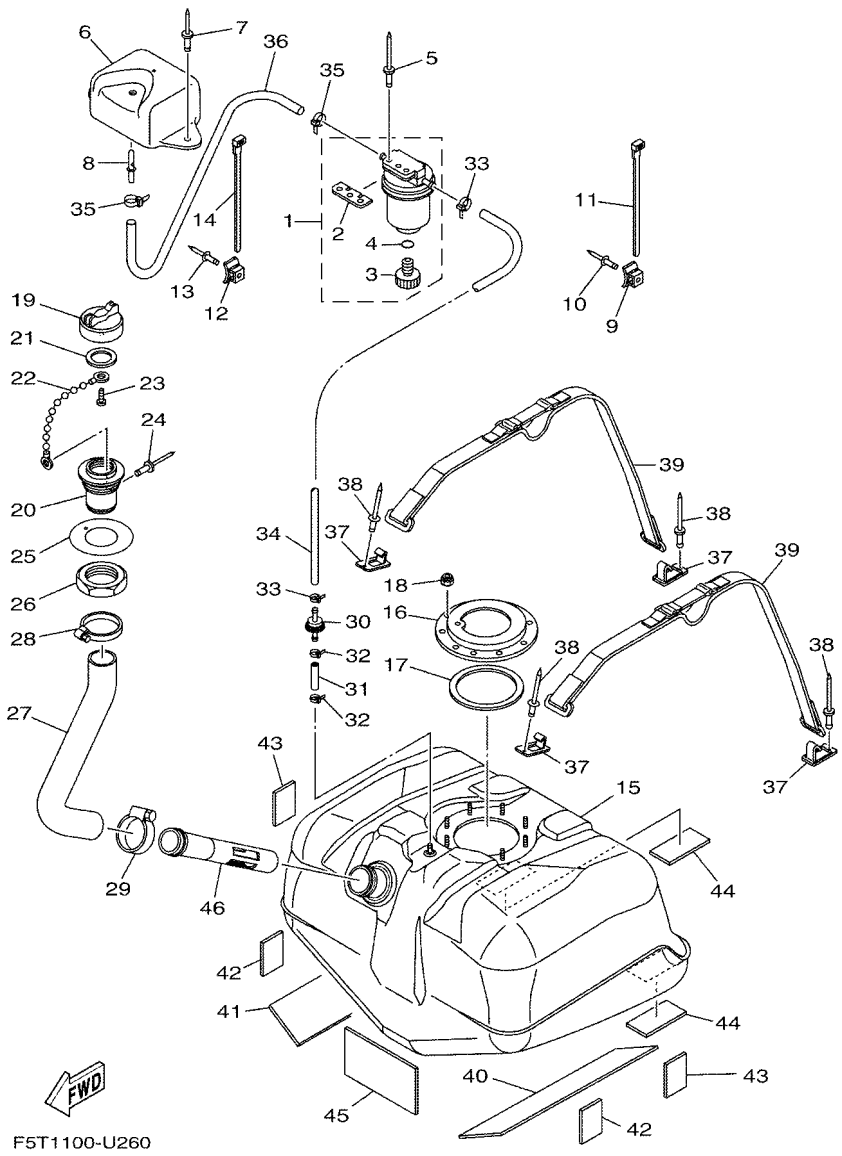

FIG. 26 FUEL TANK

REF. NO.	PART NO.	DESCRIPTION	F5T6	F5T7				REMARKS
28	90601–155U4	BAND, HOSE 55	1	1				
29	90601–155U4	BAND, HOSE 55	1	1				
30	F3Y–U7767–00	CHECK VALVE	1	1				
31	GP7–U785H–00	HOSE, AIR VENT 3	1	1				
32	90465–11829	CLAMP	2	2				
33	90465–11829	CLAMP	2	2				
34	F1K–U785G–00	HOSE, AIR VENT	1	1				
35	90465–11829	CLAMP	2	2				
36	F0D–U7856–10	HOSE, AIR VENT 3	1	1				
37	F1K–U5772–04	HOOK A	4	4				
38	90267–489U1	RIVET,BLIND	4	4				
39	F2S–67743–00	BELT, TANK 1	2	2				
40	F2S–U759B–00	MAT 1	1	1				
41	F2S–U759B–00	MAT 1	1	1				
42	F1W–U759C–01	MAT 2	2	2				
43	F1W–U759C–01	MAT 2	2	2				
44	F1K–U759C–00	MAT 2	2	2				
45	F1S–U8221–00	PAD, BATTERY	1	1				
46	F4L–U773D–00	TUBE	1	1				

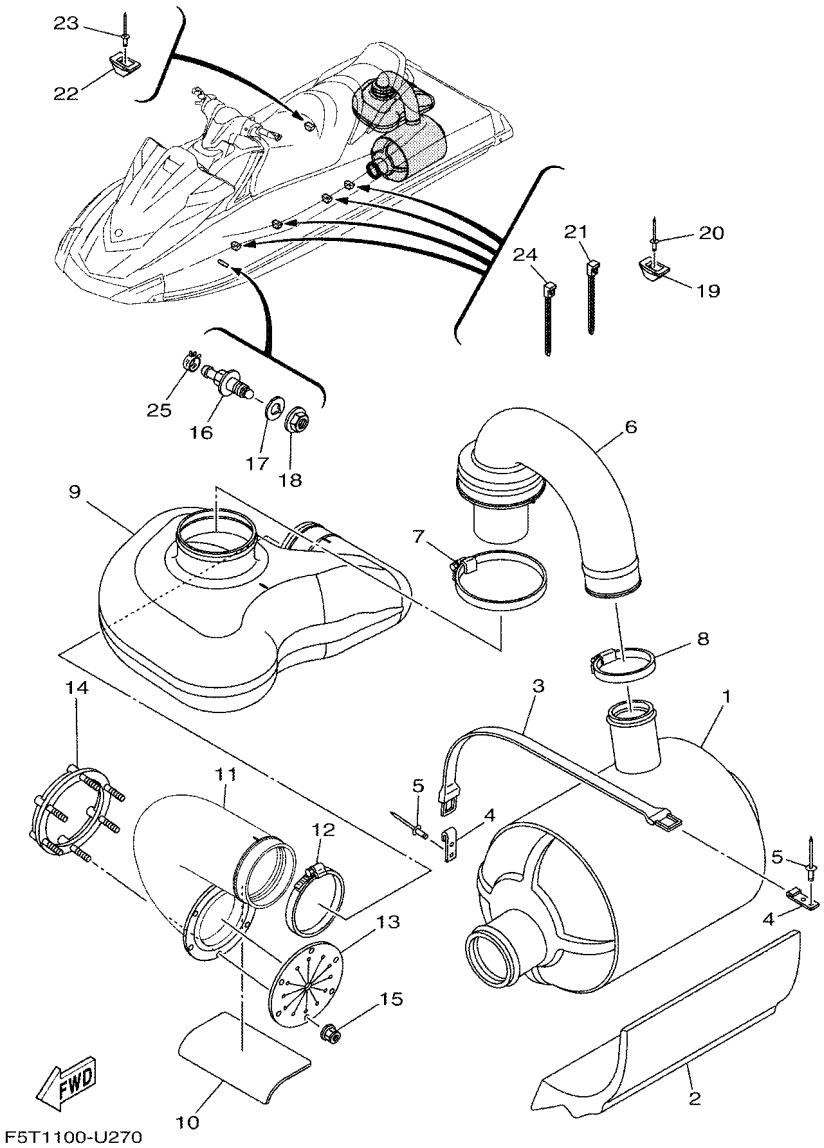

FIG. 27 EXHAUST 3

REF. NO.	PART NO.	DESCRIPTION	F5T6	F5T7				REMARKS
1	F4G–U7550–02	WATER LOCK COMP.	1	1				
2	F4G–U892F–00	FLOATATION, BASE 1	1	1				
3	EW2–67821–00	BAND, FUEL TANK	1	1				
4	GA7–65772–00	HOOK A	2	2				
5	90267–489U1	RIVET,BLIND	4	4				
6	F4G–U7555–00	HOSE, EXHAUST	1	1				
7	90601–179U8	BAND, HOSE 79	1	1				
8	90450–99804	HOSE CLAMP ASSY	1	1				
9	F2N–U4261–00	TANK, WATER	1	1				
10	F1S–U8221–00	PAD, BATTERY	1	1				
11	F2N–U758D–00	HOSE,EXHAUST 3	1	1				
12	90450–99801	HOSE CLAMP ASSY	1	1				
13	F1B–U751G–00	VALVE, EXHAUST	1	1				
14	F1S–U757B–01	PLATE	1	1				
15	F2N–U142L–00	NUT, LOCK	6	6				
16	F2C–U753B–01	PILOT, WATER	1	1				
17	F2C–U7564–00	GASKET	1	1				
18	F2C–U2733–00	NUT	1	1				
19	F1W–U828M–00	BASE, CLAMP	4	4				
20	90267–489U6	RIVET, BLIND	4	4				
21	90464–32801	CLAMP	2	2				
22	F1W–U828M–00	BASE, CLAMP	1	1				
23	90267–489U6	RIVET, BLIND	1	1				
24	90601–200U2	BAND	3	3				
25	90467–150A5	CLIP	1	1				

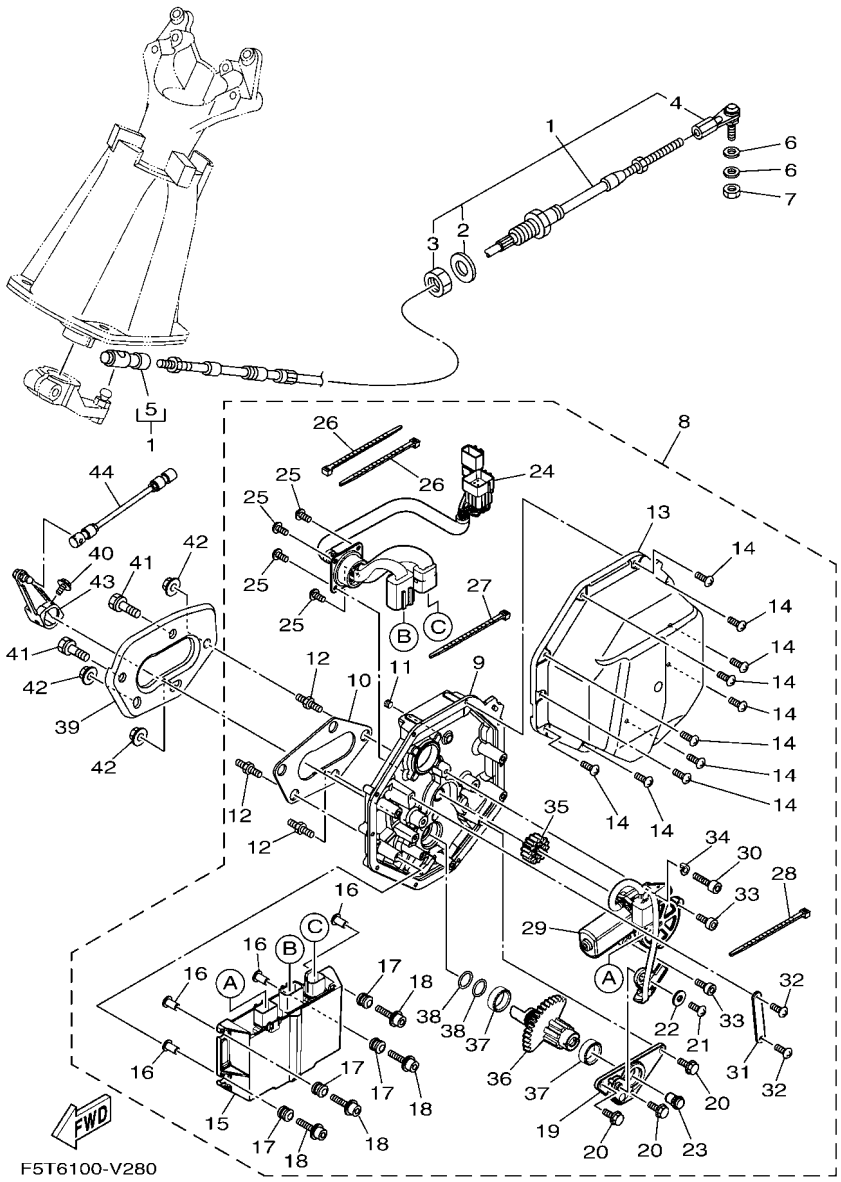

FIG. 28 CONTROL CABLE

REF. NO.	PART NO.	DESCRIPTION	F5T6	F5T7				REMARKS
1	F2N–61481–00	CABLE, STEERING	1	1				
2	F1B–61438–00	.PACKING C	1	1				
3	F1B–6151S–00	.NUT	1	1				
4	F1B–61461–02	.STUD, JOINT BALL	1	1				
5	F2N–61460–00	.BALL JOINT ASSY	1	1				
6	90201–06906	WASHER, PLATE	2	2				
7	9538R–06700	NUT	1	1				
8	F4G–6140B–03	MOTOR ASSY.	1	1				
9	F3Y–6152K–00	.HOUSING	1	1				
10	F3Y–63262–00	.SEAL	1	1				
11	F3J–613D0–00	.PLUG	1	1				
12	F3J–67369–00	.BOLT, STUD	3	3				
13	F3Y–6143J–00	.COVER	1	1				
14	F3Y–68198–00	.SCREW	10	10				
15	F4G–68197–02	.CONTROL UNIT	1	1				
16	90387–06119	.COLLAR	4	4				
17	6A0–82317–00	.DAMPER, IGNITION COIL	4	4				
18	F3J–613B4–20	.BOLT	4	4				
19	F3Y–61256–00	.PLATE	1	1				
20	F3Y–613B3–00	.BOLT, HEXAGON	3	3				
21	F3J–68198–20	.SCREW	1	1				
22	F3J–613C3–10	.WASHER, PLAIN	1	1				
23	F3J–60428–00	.MAGNET, SENSOR	1	1				
24	F4G–68270–01	.WIRE HARNESS ASSY.	1	1				
25	F3J–68198–00	.SCREW	4	4				
26	F3J–68273–00	.CLAMP	2	2				
27	F3J–68273–00	.CLAMP	1	1				

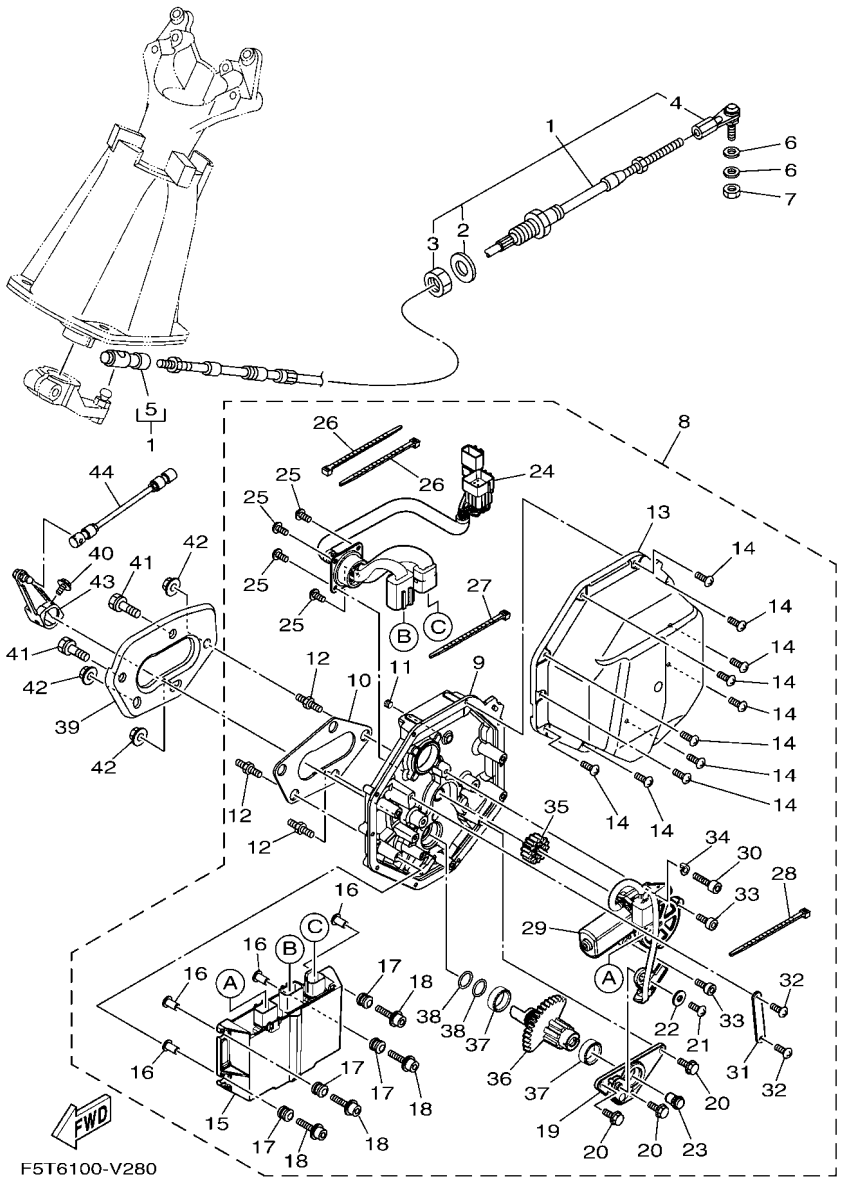

FIG. 28 CONTROL CABLE

REF. NO.	PART NO.	DESCRIPTION	F5T6	F5T7				REMARKS
28	F3J–68273–00	.CLAMP	1	1				
29	F3Y–68352–00	.MOTOR	1	1				
30	F3J–613B4–00	.BOLT	1	1				
31	F3Y–61348–00	.PLATE	1	1				
32	F3J–68198–20	.SCREW	2	2				
33	F3J–613B4–10	.BOLT	2	2				
34	F3J–61492–00	.SPACER	1	1				
35	F3Y–60211–00	.GEAR 1	1	1				
36	F3Y–60221–00	.SHAFT, 1	1	1				
37	F3Y–61344–00	.BUSH	2	2				
38	F3Y–613A5–00	.O-RING	2	2				
39	F3Y–U8285–00	PLATE	1	1				
40	90119–06893	BOLT, WITH WASHER	1	1				
41	90119–08851	BOLT, WITH WASHER	2	2				
42	F3Y–U142L–00	NUT, LOCK	3	3				
43	F3Y–6150F–00	SHIFT ARM ASSY	1	1				
44	F3J–6150D–00	ROD ASSY 2	1	1				

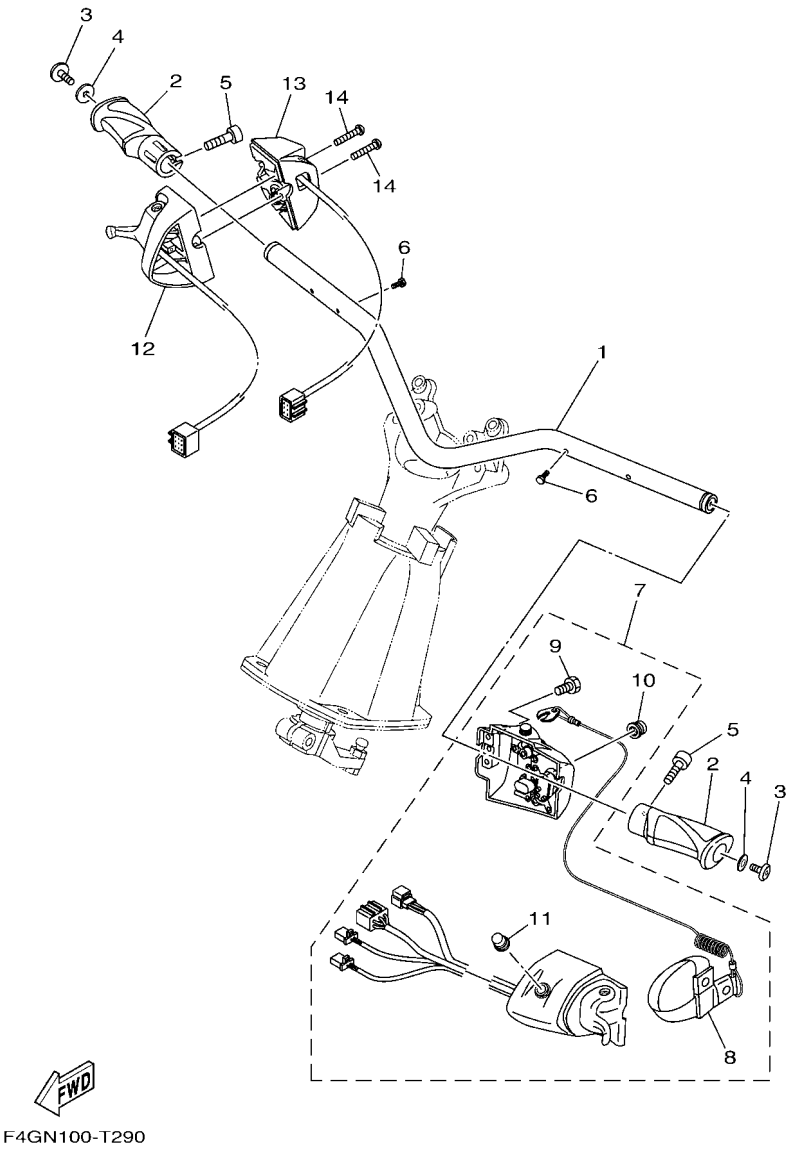

FIG. 29 STEERING 1

REF. NO.	PART NO.	DESCRIPTION	F5T6	F5T7				REMARKS
1	F2X–U1552–10	HANDLE	1	1				
2	F2S–U155D–03	GRIP, HANDLE	2	2				
3	90110–06382	BOLT, HEXAGON SOCKET HEAD	2	2				
4	90201–068G0	WASHER, PLATE	2	2				
5	F2S–U1516–00	BOLT	2	2				
6	91380–04030	BOLT	2	2				
7	F2X–68310–01	SWITCH BOX ASSY	1	1				
8	EW2–68348–00	.LANYARD, STOP SWITCH	1	1				
9	6CS–6725F–00	.BOLT, THROTTLE	4	4				
10	FK7–68312–02	.STOP BUTTON COMP	1	1				
11	FK7–68313–02	.START BUTTON COMP.	1	1				
12	6CS–14305–11	THROTTLE LEVER COMP	1	1				
13	6CS–81860–00	SWITCH ASSY	1	1				
14	6CS–6725F–00	BOLT, THROTTLE	2	2				

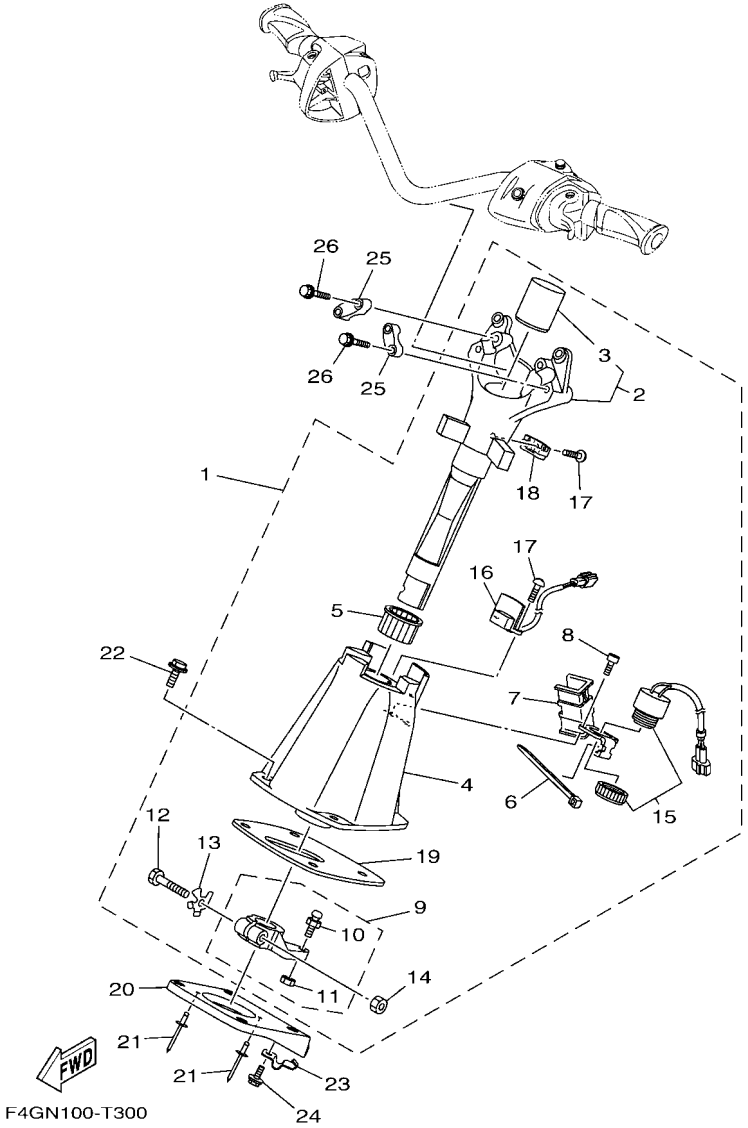

FIG. 30 STEERING 2

REF. NO.	PART NO.	DESCRIPTION	F5T6	F5T7				REMARKS
1	F2X–61400–01	STEERING MASTER ASSY	1	1				
2	F2X–67410–00	.SHAFT ASSY	1	1				
3	F2X–61435–00	..PIPE, SEAL	1	1				
4	F2X–6152M–00	.HOUSING ASSY	1	1				
5	F1K–6134M–00	.BUSH	1	1				
6	703–82591–00	.BAND	1	1				
7	F2X–6146H–00	.SPACER, BRKT.	1	1				
8	F1B–613C1–00	.SCREW	2	2				
9	F1K–6153R–00	.ARM ASSY.	1	1				
10	EU0–61461–02	..STUD, JOINT BALL	1	1				
11	95720–06300	..NUT, SELF-LOCKING	1	1				
12	F1K–61355–00	.BOLT	1	1				
13	F1K–6142B–00	.PLATE, RETAINING	1	1				
14	95720–08300	.NUT, SELF-LOCKING	1	1				
15	F1S–68341–00	.BUZZER	1	1				
16	F2X–6838B–01	.SENSOR, MAGNET	1	1				
17	F2X–613C1–00	.SCREW	3	3				
18	F2X–6838C–01	.MAGNET	1	1				
19	F1K–6143C–00	.SEAL, RUBBER	1	1				
20	F3Y–U1467–00	BRACKET,STOPPER CABLE	1	1				
21	90267–489U2	RIVET, BLIND	2	2				
22	90119–08836	BOLT, WITH WASHER	4	4				
23	F1K–U1468–03	STOPPER, CABLE	1	1				
24	90119–069UH	BOLT, WITH WASHER	1	1				
25	EU0–23814–31	HOLDER, HANDLE UPPER	2	2				
26	90119–08827	BOLT, WITH WASHER	4	4				

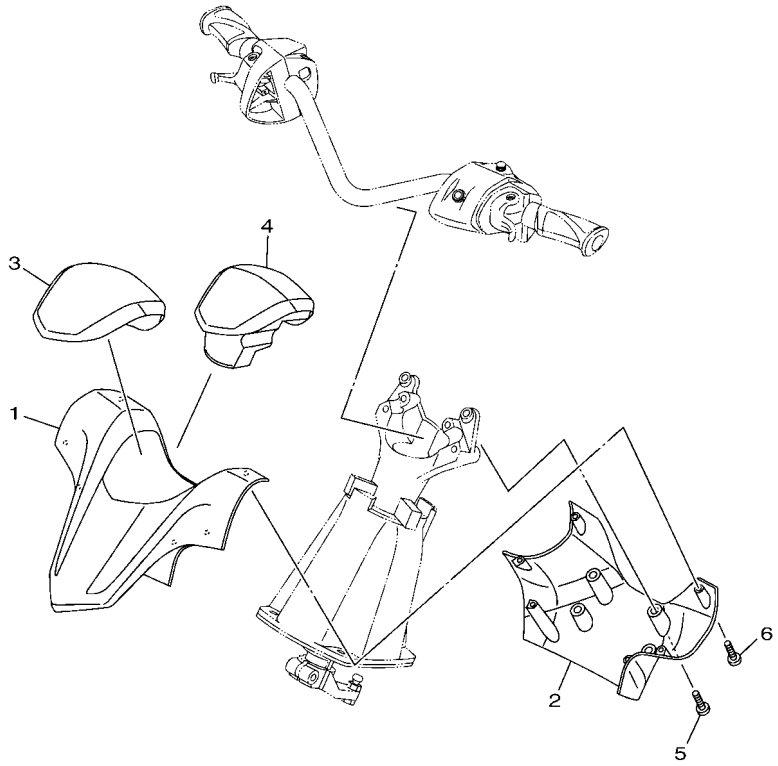

F2X1100-P320

FIG. 31 STEERING 3

REF. NO.	PART NO.	DESCRIPTION	F5T6	F5T7				REMARKS
1	F2X–U143D–10	PAD, STEERING 1	1	1				
2	F2X–U143E–10	PAD, STEERING 2	1	1				
3	F2X–U142D–30	COVER, PAD	1					CRUISER FOR GRAY
	F2X–U142D–40	COVER, PAD	1					CRUISER FOR RED
	F2X–U142D–20	COVER, PAD		1				DELUXE FOR BLACK
	F2X–U142D–00	COVER, PAD		1				DELUXE FOR BLUE
4	F2X–U156E–00	PAD 1	1	1				
5	90154–06017	SCREW, BINDING	4	4				
6	90149–05903	SCREW	6	6				

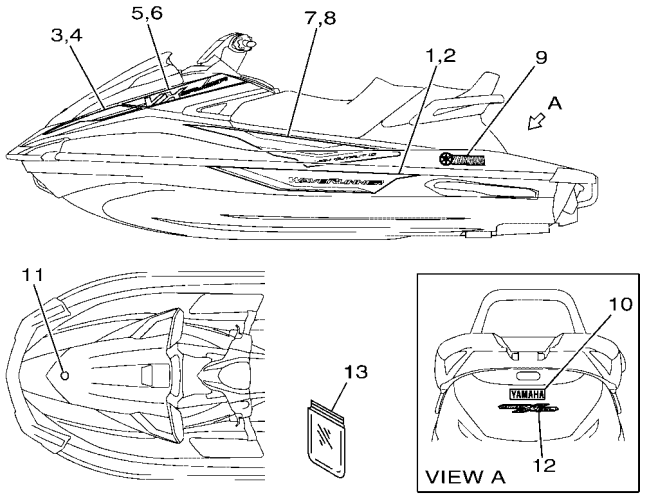

FOR CRUISER

FOR DELUXE

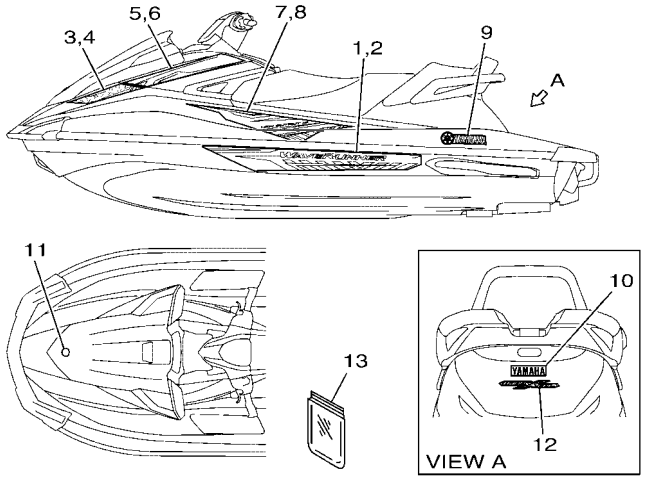

F5T6100-V320

FIG. 32 GRAPHICS

REF. NO.	PART NO.	DESCRIPTION	F5T6	F5T7				REMARKS
1	F5T–U417B–70	GRAPHIC 1 (LH)	1					CRUISER FOR GRAY
	F5T–U417B–80	GRAPHIC 1 (LH)	1					CRUISER FOR RED
	F5T–U417B–90	GRAPHIC 1 (LH)		1				DELUXE FOR BLACK
	F5T–U417B–A0	GRAPHIC 1 (LH)		1				DELUXE FOR BLUE
2	F5T–U417C–70	GRAPHIC 2 (RH)	1					CRUISER FOR GRAY
	F5T–U417C–80	GRAPHIC 2 (RH)	1					CRUISER FOR RED
	F5T–U417C–90	GRAPHIC 2 (RH)		1				DELUXE FOR BLACK
	F5T–U417C–A0	GRAPHIC 2 (RH)		1				DELUXE FOR BLUE
3	F5T–U417D–70	GRAPHIC 3 (LH)	1					CRUISER FOR GRAY
	F5T–U417D–80	GRAPHIC 3 (LH)	1					CRUISER FOR RED
	F5T–U417D–90	GRAPHIC 3 (LH)		1				DELUXE FOR BLACK
	F5T–U417D–A0	GRAPHIC 3 (LH)		1				DELUXE FOR BLUE
4	F5T–U417E–70	GRAPHIC 4 (RH)	1					CRUISER FOR GRAY
	F5T–U417E–80	GRAPHIC 4 (RH)	1					CRUISER FOR RED
	F5T–U417E–90	GRAPHIC 4 (RH)		1				DELUXE FOR BLACK
	F5T–U417E–A0	GRAPHIC 4 (RH)		1				DELUXE FOR BLUE
5	F5T–U417F–70	GRAPHIC 5 (LH)	1					CRUISER FOR GRAY
	F5T–U417F–80	GRAPHIC 5 (LH)	1					CRUISER FOR RED
	F5T–U417F–90	GRAPHIC 5 (LH)		1				DELUXE FOR BLACK
	F5T–U417F–A0	GRAPHIC 5 (LH)		1				DELUXE FOR BLUE
6	F5T–U417G–70	GRAPHIC 6 (RH)	1					CRUISER FOR GRAY
	F5T–U417G–80	GRAPHIC 6 (RH)	1					CRUISER FOR RED
	F5T–U417G–90	GRAPHIC 6 (RH)		1				DELUXE FOR BLACK
	F5T–U417G–A0	GRAPHIC 6 (RH)		1				DELUXE FOR BLUE
7	F5T–U417H–70	GRAPHIC 7 (LH)	1					CRUISER FOR GRAY
	F5T–U417H–80	GRAPHIC 7 (LH)	1					CRUISER FOR RED
	F5T–U417H–90	GRAPHIC 7 (LH)		1				DELUXE FOR BLACK

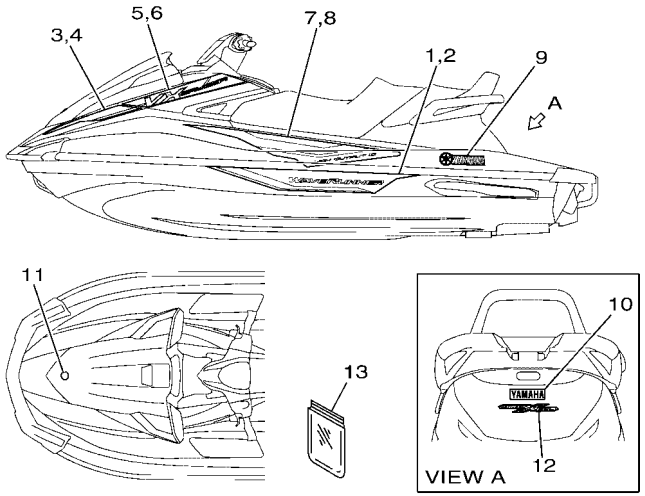

FOR CRUISER

FOR DELUXE

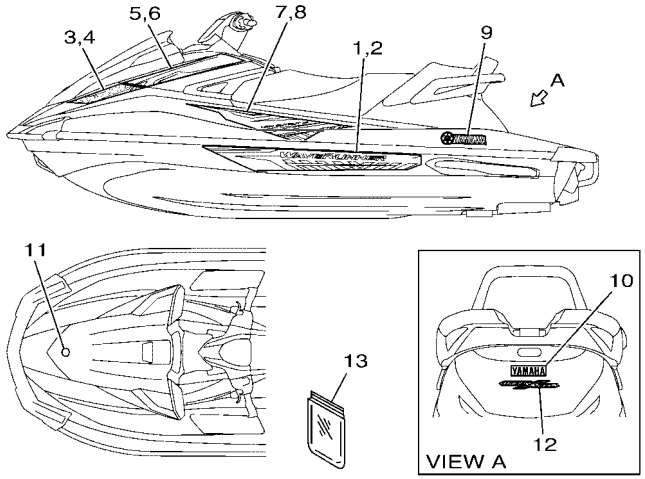

F5T6100-V320

FIG. 32 GRAPHICS

REF. NO.	PART NO.	DESCRIPTION	F5T6	F5T7				REMARKS
7	F5T–U417H–A0	GRAPHIC 7 (LH)		1				DELUXE FOR BLUE
8	F5T–U417J–70	GRAPHIC 8 (RH)	1					CRUISER FOR GRAY
	F5T–U417J–80	GRAPHIC 8 (RH)	1					CRUISER FOR RED
	F5T–U417J–90	GRAPHIC 8 (RH)		1				DELUXE FOR BLACK
	F5T–U417J–A0	GRAPHIC 8 (RH)		1				DELUXE FOR BLUE
9	F2W–U411C–C0	EMBLEM, YAMAHA	2					CRUISER FOR GRAY
	F3L–U411C–10	EMBLEM, YAMAHA	2					CRUISER FOR RED
	F2W–U411C–D0	EMBLEM, YAMAHA		2				DELUXE FOR BLACK
	F2P–U411C–00	EMBLEM, YAMAHA		2				DELUXE FOR BLUE
10	F2W–U4114–C0	MARK, YAMAHA A	1					CRUISER FOR GRAY
	F3L–U4114–10	MARK, YAMAHA A	1					CRUISER FOR RED
	F2W–U4114–D0	MARK, YAMAHA A		1				DELUXE FOR BLACK
	F2P–U4114–00	MARK, YAMAHA A		1				DELUXE FOR BLUE
11	F3Y–U411H–02	EMBLEM, TUNING FORK	1	1				
12	F1W–U4121–00	EMBLEM A	1	1				
13	F3Y–U5901–00	BAG, VINYL	1	1				

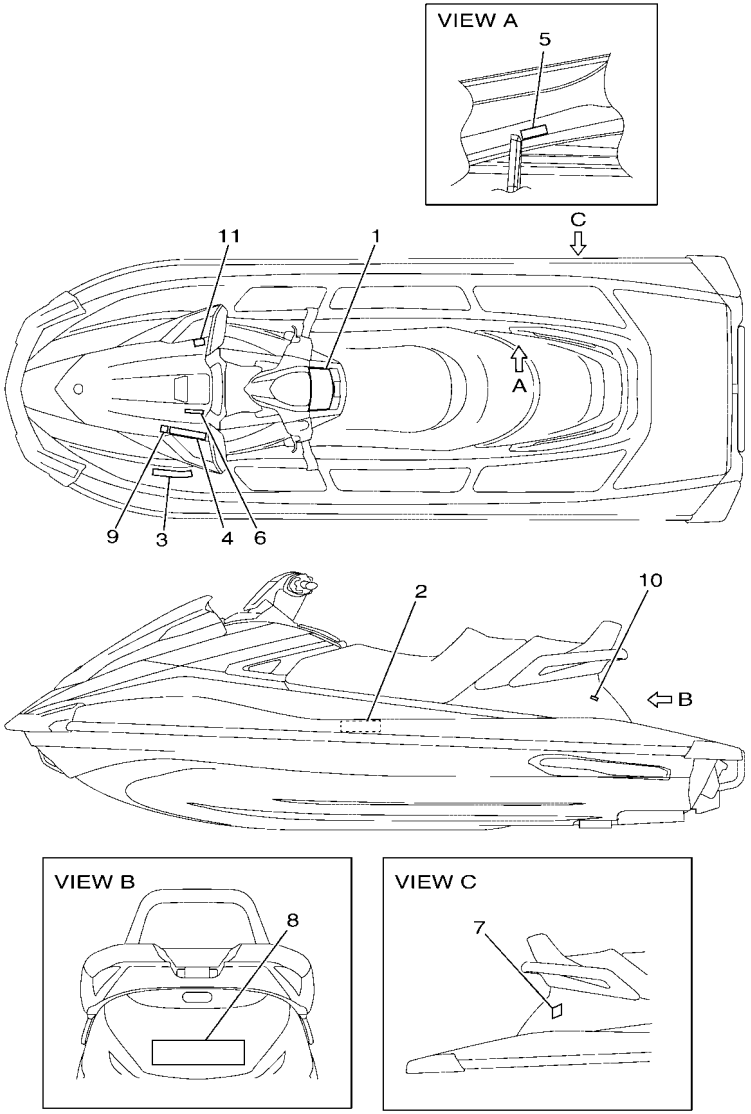

F5T6100-V330

FIG. 33 IMPORTANT LABELS

REF. NO.	PART NO.	DESCRIPTION	F5T6	F5T7				REMARKS
1	F2X–U41B1–30	LABEL, WARNING UNIFORM 1	1	1				
2	F3V–U41B1–00	LABEL, WARNING UNIFORM 1	1	1				
3	F3V–U41B1–20	LABEL, WARNING UNIFORM 1	1	1				
4	F1S–U415B–11	LABEL, WARNING(FUEL)	1	1				
5	F0V–U41DB–12	LABEL, WARNING BATTERY	1	1				
6	F1B–U41F5–21	LABEL, FIRE EXTINGUISHER 1	1	1				
7	F3V–U416A–10	WARNING LABEL ASSY.	1	1				
8	F4E–U41E1–30	LABEL, SET 1	1	1				
9	B4F–F817K–00	LABEL, FUEL	1	1				FOR EUR
10	F1S–U419E–01	LABEL 4	1	1				FOR CAN
11	F4G–U413P–10	LABEL, BUILDERS PLATE	1	1				FOR EUR

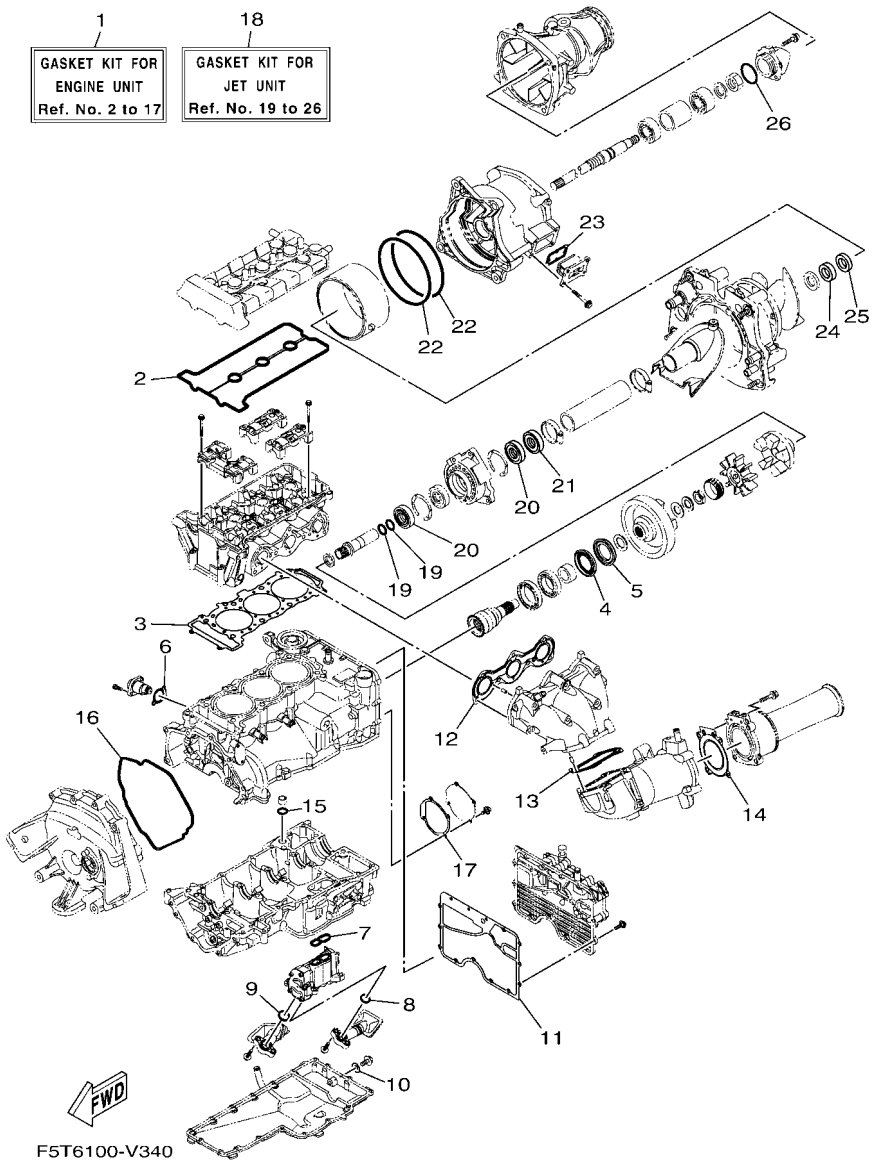

FIG. 34 REPAIR KIT 1

REF. NO.	PART NO.	DESCRIPTION	F5T6	F5T7				REMARKS
1	6EY–W0001–01	GASKET KIT FOR ENGINE UNIT	1	1				
2	6EY–11193–00	.GASKET, HEAD COVER 1	1	1				
3	6EY–11181–00	.GASKET, CYLINDER HEAD 1	1	1				
4	93101–40001	.OIL SEAL	1	1				
5	93101–40002	.OIL SEAL	1	1				
6	2C0–12213–00	.GASKET, TENSIONER CASE	1	1				
7	6EY–13563–00	.GASKET	1	1				
8	6EY–13477–00	.GASKET	1	1				
9	6EY–13476–00	.GASKET	1	1				
10	90430–08209	.GASKET	1	1				
11	6EY–15453–00	.GASKET	1	1				
12	6EY–14613–00	.GASKET, EXHAUST PIPE	1	1				
13	6EY–14739–00	.GASKET, MUFFLER DAMPER 1	1	1				
14	6EY–14749–00	.GASKET, MUFFLER DAMPER 2	1	1				
15	93210–17010	.O-RING	1	1				
16	6EY–15461–00	.GASKET, CRANKCASE COVER 2	1	1				
17	6EY–15463–01	.GASKET, 2	1	1				
18	6EY–W0001–21	GASKET KIT FOR JET UNIT	1	1				
19	93210–19812	.O-RING	2	2				
20	93101–25M55	.OIL SEAL	2	2				
21	93102–25009	.OIL SEAL	1	1				
22	93211–65800	.O-RING	2	2				
23	66V–42414–00	.O-RING	1	1				
24	93101–28M66	.OIL SEAL	1	1				
25	93101–28002	.OIL SEAL	1	1				
26	93210–44003	.O-RING	1	1				

PART NO.	REF. NO.
6EY–11102–00	1 – 2
6EY–11110–00	1 – 1
6EY–11119–00	1 – 20
6EY–1111E–10	1 – 18
5VY–1111G–00	1 – 15
6EY–11125–00	8 – 25
6EY–11126–10	8 – 27
2C0–11133–11	1 – 3
8HF–11134–10	1 – 4
6EY–11164–00	8 – 20
6EY–11166–10	8 – 16
6EY–11181–00	1 – 16
	34 – 3
6EY–11191–10	1 – 9
6EY–11193–00	1 – 11
	34 – 2
69J–11301–10	2 – 22
68V–11325–02	2 – 23
67F–11328–00	2 – 24
6EY–11400–00	3 – 1
6EY–11406–00	3 – 14
2HC–11407–00	3 – 26
3LD–11416–10	3 – 6
3LD–11416–20	3 – 6
3LD–11416–30	3 – 6
3LD–11416–40	3 – 6
3LD–11416–50	3 – 6
3LD–11416–60	3 – 6
3LD–11416–70	3 – 6
8ES–11428–01	2 – 8
8ES–11454–00	3 – 28
2HC–11464–00	3 – 31
6EY–11478–00	3 – 30
6EY–11531–00	3 – 27
6EY–11557–00	3 – 20
6EY–11571–00	3 – 21
8KH–11603–01	3 – 8
8KH–11631–00	3 – 7
6EY–11633–00	3 – 9
B0F–11650–00	3 – 2
5JW–11654–00	3 – 3
5JW–11656–00	3 – 5
5JW–11656–10	3 – 5
5JW–11656–20	3 – 5
5JW–11656–30	3 – 5
5JW–11656–40	3 – 5
5JW–11656–50	3 – 5
6EY–11917–00	3 – 17

PART NO.	REF. NO.
8GL–12111–10	4 – 5
8GL–12113–00	4 – 8
1RC–12116–00	4 – 7
3D7–12117–00	4 – 9
1WG–12118–00	4 – 10
2HC–12119–00	4 – 11
8GL–12121–10	4 – 6
6EY–12153–01	4 – 13
1HX–12168–00	4 – 12
1HX–12168–20	4 – 12
1HX–12168–40	4 – 12
1HX–12168–60	4 – 12
1HX–12168–80	4 – 12
1HX–12168–A0	4 – 12
1HX–12168–F0	4 – 12
1HX–12168–H1	4 – 12
1HX–12168–K1	4 – 12
1HX–12168–M1	4 – 12
1HX–12168–R1	4 – 12
1HX–12168–U1	4 – 12
1HX–12168–W1	4 – 12
1HX–12168–Y1	4 – 12
1HX–12169–11	4 – 12
1HX–12169–31	4 – 12
1HX–12169–50	4 – 12
1HX–12169–70	4 – 12
1HX–12169–90	4 – 12
1HX–12169–E0	4 – 12
1HX–12169–G0	4 – 12
1HX–12169–J0	4 – 12
1HX–12169–L0	4 – 12
1HX–12169–N0	4 – 12
1HX–12169–T0	4 – 12
6EY–12170–00	4 – 1
2HC–12176–00	4 – 3
6EY–12180–00	4 – 2
8KH–12210–00	4 – 15
2C0–12213–00	4 – 16
	34 – 6
5BE–12241–00	1 – 10
6EY–12251–00	4 – 18
2HC–12252–00	4 – 19
6EY–12279–00	4 – 21
6D3–12411–00	10 – 27
6EY–12413–00	10 – 28
6EY–12577–00	10 – 21
6S5–12579–00	10 – 23
6EY–12580–00	10 – 3

PART NO.	REF. NO.
6EY–12584–00	10 – 8
6EY–12880–00	5 – 8
8ES–13284–00	2 – 17
6EY–13300–00	7 – 1
6EY–13355–00	7 – 2
6EY–13405–00	7 – 5
6EY–13406–00	7 – 8
6EY–13417–00	7 – 18
5GH–13440–60	7 – 17
6EY–13455–00	7 – 20
6EY–13470–00	8 – 2
6EY–13476–00	7 – 9
	34 – 9
6EY–13477–00	7 – 6
	34 – 8
6EY–13532–00	5 – 13
6EY–13556–00	8 – 3
8FP–13556–10	5 – 11
6EY–13557–00	8 – 5
6EY–13563–00	7 – 4
	34 – 7
6EY–13641–00	5 – 2
6EY–13750–00	5 – 1
2HC–13761–00	5 – 5
6S5–13907–03	18 – 1
6EY–14126–00	5 – 4
6EY–14156–00	5 – 3
68V–1416A–00	5 – 6
6CS–14305–11	29 – 12
6EY–14410–01	6 – 7
6EY–14419–00	6 – 12
6EY–14436–00	6 – 11
6BH–14445–00	5 – 12
6EY–14451–00	6 – 8
6EY–14452–00	6 – 10
6EY–14462–00	6 – 9
6EY–14470–00	6 – 16
6EY–14485–00	6 – 13
6EY–14613–00	9 – 1
	34 – 12
6EY–14711–00	9 – 2
6EY–14719–00	9 – 16
6EY–14721–00	9 – 6
6EY–14739–00	9 – 7
	34 – 13
6EY–14749–00	9 – 14
	34 – 14
6EY–14784–00	9 – 15

PART NO.	REF. NO.
6EY–15109–09	2 – 2
6EY–15362–10	8 – 14
3Y1–15363–10	1 – 12
4JT–15381–01	2 – 6
6EY–15421–00	2 – 18
6EY–15453–00	8 – 1
	34 – 11
6EY–15461–00	2 – 19
	34 – 16
6EY–15463–01	2 – 29
	34 – 17
6EY–15486–00	7 – 14
2HC–15512–00	14 – 2
8FA–15515–00	14 – 1
8ES–15521–00	14 – 3
6EY–15589–01	2 – 28
6EY–15590–00	14 – 4
EU0–23814–31	30 – 25
70R–24489–00	26 – 4
6EY–2450B–10	5 – 16
70R–24543–00	26 – 3
6EY–24864–00	10 – 19
6EX–2812A–00	16 – 26
6EY–41661–00	19 – 4
6EY–41662–00	19 – 5
66V–42414–00	11 – 9
	34 – 23
6GA–44517–00	19 – 1
6EY–44574–00	19 – 2
663–45119–00	12 – 3
6EY–45155–00	3 – 25
68Y–45511–00	11 – 14
6EY–4581J–00	3 – 35
68N–5112T–00	22 – 11
F3Y–60211–00	28 – 35
F3Y–60221–00	28 – 36
F3J–60428–00	28 – 23
F3Y–61256–00	28 – 19
F3Y–61344–00	28 – 37
F3Y–61348–00	28 – 31
F1K–6134M–00	30 – 5
F1K–61355–00	30 – 12
F3Y–613A5–00	28 – 38
F3Y–613B3–00	28 – 20
F3J–613B4–00	28 – 30
F3J–613B4–10	28 – 33
F3J–613B4–20	28 – 18
F1B–613C1–00	30 – 8

PART NO.	REF. NO.
F2X–613C1–00	30 – 17
F3J–613C3–10	28 – 22
F3J–613D0–00	28 – 11
F2X–61400–01	30 – 1
F4G–6140B–03	28 – 8
F1K–6142B–00	30 – 13
F2X–61435–00	30 – 3
F1B–61438–00	28 – 2
F1K–6143C–00	30 – 19
F3Y–6143J–00	28 – 13
F2N–61460–00	28 – 5
EU0–61461–02	30 – 10
F1B–61461–02	28 – 4
F2X–6146H–00	30 – 7
F2N–61481–00	28 – 1
F3J–61492–00	28 – 34
F3J–6150D–00	28 – 44
F3Y–6150F–00	28 – 43
F1B–6151S–00	28 – 3
F3Y–6152K–00	28 – 9
F2X–6152M–00	30 – 4
F1K–6153R–00	30 – 9
F1K–61624–00	22 – 25
F0X–61637–00	22 – 28
EU0–61652–00	10 – 7
	22 – 2
F0X–61652–00	22 – 29
EW2–62142–00	26 – 2
F1G–62149–00	26 – 8
F2F–6214A–00	26 – 1
GP7–62159–02	26 – 6
GJ3–6215F–00	18 – 17
F3Y–63262–00	28 – 10
GA7–65772–00	27 – 4
6CS–6725F–00	29 – 9
	29 – 14
F3J–67369–00	28 – 12
F2X–67410–00	30 – 2
F2S–67743–00	26 – 39
F1B–67747–00	26 – 17
EW2–67821–00	27 – 3
F2N–67823–10	20 – 21
	20 – 31
F4G–68197–02	28 – 15
F3J–68198–00	28 – 25
F3Y–68198–00	28 – 14
F3J–68198–20	28 – 21
	28 – 32

PART NO.	REF. NO.
F2X–6820A–01	18 – 19
GU2–6822E–01	18 – 21
F4G–68270–01	28 – 24
F3J–68273–00	28 – 26
	28 – 27
	28 – 28
6S5–682E0–00	18 – 2
F2X–68310–01	29 – 7
FK7–68312–02	29 – 10
FK7–68313–02	29 – 11
F1S–68341–00	30 – 15
EW2–68348–00	29 – 8
F3Y–68352–00	28 – 29
F2X–6838B–01	30 – 16
F2X–6838C–01	30 – 18
4D9–81168–00	17 – 16
60E–81315–00	17 – 6
60E–81328–00	14 – 10
6S5–81364–10	8 – 9
6EY–81410–00	14 – 8
6EY–81450–00	14 – 7
6EY–81800–00	15 – 1
6EY–81826–00	15 – 6
6EY–81840–00	15 – 4
11H–81844–00	15 – 2
1FK–81847–00	15 – 3
3TB–81847–00	15 – 5
	15 – 7
6CS–81860–00	29 – 13
6EY–81940–09	16 – 13
6EY–81953–00	16 – 15
6EX–8195A–00	16 – 25
6D3–81960–00	16 – 10
6EY–81975–00	16 – 6
6EY–82115–00	16 – 16
6EY–82116–00	18 – 47
6EY–82117–00	16 – 17
67F–82151–00	16 – 22
6EX–82151–00	16 – 24
67F–82151–10	16 – 23
67F–82151–30	16 – 20
67F–82151–40	16 – 21
6EX–82170–01	16 – 19
6EX–82310–00	16 – 4
6A0–82317–00	16 – 8
	16 – 27
	28 – 17
6EY–82355–00	16 – 14

PART NO.	REF. NO.
5S7–82380–00	5 – 7
68V–82504–00	17 – 5
60E–82556–00	18 – 3
6CR–82560–00	17 – 13
6ET–82576–00	17 – 7
703–82591–00	30 – 6
6EY–82593–00	16 – 30
6EY–8259L–B0	16 – 12
6CS–8273J–10	17 – 18
6EY–83618–10	17 – 22
60E–83627–00	6 – 17
6EY–84385–00	10 – 6
6AA–85542–00	16 – 28
61A–85790–00	17 – 11
6DE–85790–00	17 – 21
8FP–85886–00	5 – 14
2S3–85896–01	17 – 15
6EY–8591A–B1	16 – 2
6EY–8591S–00	16 – 3
6B6–86261–00	17 – 24
6B6–86261–11	17 – 24
6B6–86265–00	17 – 25
6B6–86265–11	17 – 25
6EY–E243A–00	10 – 30
6EY–E243E–00	10 – 1
67X–E2590–10	10 – 32
6S5–E4752–00	9 – 11
B4F–F817K–00	33 – 9
61X–G5332–00	12 – 1
65V–G5538–00	11 – 12
6EY–G5593–00	12 – 10
6CS–G5831–20	11 – 1
6GN–G6882–00	11 – 8
6EY–R1312–00	11 – 4
6EX–R1313–00	11 – 34
6ET–R1314–10	13 – 4
6EX–R1318–01	11 – 24
6EY–R1321–01	11 – 22
6EY–R1326–00	11 – 19
6EX–R1333–00	11 – 46
6HH–R1337–00	11 – 6
6ET–R1341–10	13 – 1
6ET–R1342–10	13 – 2
6EY–R1348–00	11 – 23
6EY–R1381–00	12 – 14
6EY–R1959–00	11 – 33
6S5–R2358–00	13 – 11
F2C–U1314–00	22 – 48
F2X–U135C–00	21 – 11
F4G–U1369–00	12 – 12
F2S–U13C1–00	20 – 12
	21 – 5
F2X–U13C1–00	21 – 31
F2X–U142D–00	31 – 3
F2X–U142D–20	31 – 3
F2X–U142D–30	31 – 3
F2X–U142D–40	31 – 3
F2N–U142L–00	18 – 10
	20 – 15
	20 – 25
	23 – 5
	23 – 6
	23 – 15
	23 – 18
	27 – 15
F3Y–U142L–00	28 – 42
F2X–U143D–10	31 – 1
F2X–U143E–10	31 – 2
6GA–U1461–10	13 – 14
F3Y–U1467–00	30 – 20
F1K–U1468–03	30 – 23
F2S–U1516–00	29 – 5
F2C–U151S–00	18 – 30
F2X–U1552–10	29 – 1
F2S–U155D–03	29 – 2
F2X–U156E–00	31 – 4
F2N–U1628–02	22 – 18
	25 – 35
F1B–U1653–02	22 – 24
F2X–U1708–00	20 – 34
F2X–U2127–00	24 – 1
F2N–U213G–02	24 – 5
F2X–U2157–00	24 – 2
F1S–U2280–02	22 – 38
F1S–U2285–00	22 – 39
F2X–U2511–00	23 – 1
F2X–U2511–10	23 – 1
F2X–U2511–20	23 – 1
	23 – 1
F2X–U2512–00	23 – 7
F2X–U2512–10	23 – 7
F2X–U2512–20	23 – 7
	23 – 7
F2X–U2519–10	23 – 8
F2X–U2519–40	23 – 8
F2X–U2519–80	23 – 8
F2X–U2519–90	23 – 8
F2X–U251D–00	23 – 13
F2X–U251D–10	23 – 13
F2X–U251D–20	23 – 13
	23 – 13
F2X–U251E–00	23 – 16
F2X–U251E–10	23 – 16
F2X–U251E–20	23 – 16
	23 – 16
F2N–U2663–01	21 – 6
F1W–U2664–01	25 – 3
F1K–U266B–00	21 – 27
	21 – 30
F2N–U266C–01	21 – 20
F2C–U266D–01	25 – 8
F2C–U266E–00	25 – 34
F1W–U269B–00	22 – 1
F2X–U271B–10	25 – 24
F2C–U2733–00	27 – 18
F2X–U273B–00	11 – 41
F2X–U278A–00	22 – 45
F2S–U278F–00	22 – 49
F2S–U278H–00	22 – 50
F1K–U283B–02	21 – 14
F2X–U2875–00	20 – 36
F2X–U351H–00	23 – 22
	23 – 22
F2X–U351H–40	23 – 22
F2X–U351J–00	23 – 23
	23 – 23
F2X–U351J–40	23 – 23
F2X–U351K–00	23 – 24
	23 – 24
F2X–U351K–40	23 – 24
F2X–U351M–00	23 – 25
	23 – 25
F2X–U351M–40	23 – 25
F2X–U351N–00	23 – 26
	23 – 26
F2X–U351N–40	23 – 26
F2X–U3581–01	23 – 21
	23 – 21
F2X–U3581–40	23 – 21
F2X–U371A–E0	25 – 1
F2X–U371A–F0	25 – 1
F2X–U371A–G0	25 – 1
F2X–U371A–H0	25 – 1
F2X–U371B–E0	25 – 2
F2X–U371B–F0	25 – 2
F2X–U371B–G0	25 – 2
F2X–U371B–H0	25 – 2
F2X–U372A–E0	25 – 6
F2X–U372A–F0	25 – 6
F2X–U372A–G0	25 – 6
F2X–U372A–H0	25 – 6
F2X–U372B–E0	25 – 7
F2X–U372B–F0	25 – 7
F2X–U372B–G0	25 – 7
F2X–U372B–H0	25 – 7
F2S–U375E–00	25 – 16
F1W–U3768–01	21 – 4
	21 – 26
	21 – 29
F1K–U3774–00	25 – 25
GH1–U3774–00	25 – 12
F2X–U377B–10–P1	20 – 13
F2X–U377B–10–P6	20 – 13
F2X–U377B–10–P8	20 – 13
F2X–U377B–10–PF	20 – 13
F2X–U377C–10–P1	20 – 23
F2X–U377C–10–P6	20 – 23
F2X–U377C–10–P8	20 – 23
F2X–U377C–10–PF	20 – 23
F3P–U377F–20	20 – 19
F3P–U377F–40	20 – 19
	20 – 19
F3P–U377G–20	20 – 29
F3P–U377G–40	20 – 29
	20 – 29
F2C–U377H–00	22 – 47
F2X–U377H–00	20 – 22
	20 – 22
F2X–U377H–10	20 – 22
F2X–U377J–00	20 – 32
	20 – 32
F2X–U377J–10	20 – 32
F2X–U378C–00	25 – 21
F2C–U3850–00	25 – 4
F1B–U3850–02	25 – 9
F2P–U4114–00	32 – 10
F3L–U4114–10	32 – 10
F2W–U4114–C0	32 – 10
F2W–U4114–D0	32 – 10
F2P–U411C–00	32 – 9
F3L–U411C–10	32 – 9
F2W–U411C–C0	32 – 9
F2W–U411C–D0	32 – 9
F3Y–U411H–02	32 – 11
F1W–U4121–00	32 – 12
F4G–U413P–10	33 – 11
F1S–U415B–11	33 – 4
F3V–U416A–10	33 – 7
F5T–U417B–70	32 – 1
F5T–U417B–80	32 – 1
F5T–U417B–90	32 – 1
F5T–U417B–A0	32 – 1
F5T–U417C–70	32 – 2
F5T–U417C–80	32 – 2
F5T–U417C–90	32 – 2
F5T–U417C–A0	32 – 2
F5T–U417D–70	32 – 3
F5T–U417D–80	32 – 3
F5T–U417D–90	32 – 3
F5T–U417D–A0	32 – 3
F5T–U417E–70	32 – 4
F5T–U417E–80	32 – 4
F5T–U417E–90	32 – 4
F5T–U417E–A0	32 – 4
F5T–U417F–70	32 – 5
F5T–U417F–80	32 – 5
F5T–U417F–90	32 – 5
F5T–U417F–A0	32 – 5
F5T–U417G–70	32 – 6
F5T–U417G–80	32 – 6
F5T–U417G–90	32 – 6
F5T–U417G–A0	32 – 6
F5T–U417H–70	32 – 7
F5T–U417H–80	32 – 7
F5T–U417H–90	32 – 7
F5T–U417H–A0	32 – 7
F5T–U417J–70	32 – 8
F5T–U417J–80	32 – 8
F5T–U417J–90	32 – 8
F5T–U417J–A0	32 – 8
F1S–U419E–01	33 – 10
F3V–U41B1–00	33 – 2
F3V–U41B1–20	33 – 3
F2X–U41B1–30	33 – 1
F0V–U41DB–12	33 – 5
F4E–U41E1–30	33 – 8
F1B–U41F5–21	33 – 6
F2N–U4261–00	27 – 9
F1K–U471E–03	21 – 13
F2X–U475B–00	21 – 19
F2S–U475F–00	21 – 23
F1W–U491K–00	23 – 2
	23 – 14
	23 – 17
GP7–U4953–10	22 – 21
	22 – 22
	22 – 23
	25 – 36
F2X–U515A–01	21 – 8
F2C–U515D–00	21 – 3
F2X–U516P–00	20 – 33
F2X–U5175–00	20 – 6
	20 – 17
	20 – 27
F2X–U517B–10–P4	21 – 1
F2X–U517B–10–P6	21 – 1
F2X–U517B–10–P8	21 – 1
F2X–U517B–10–P9	21 – 1
F2X–U517C–01	21 – 7
F1K–U517D–05	21 – 10
F4G–U517E–00	20 – 2
	20 – 20
	20 – 30
F2X–U517F–00	20 – 1
F1K–U517R–01	21 – 12
F1K–U518E–04	21 – 9
F2X–U519D–00	20 – 35
F2X–U519G–10	21 – 2
F2X–U5554–00	20 – 4
F2X–U555B–00	20 – 10
F1K–U5772–04	21 – 32
	26 – 37
F3Y–U5901–00	32 – 13
F2X–U590D–30	21 – 25
F2X–U590D–70	21 – 25
	21 – 25
F2X–U590E–30	21 – 28
F2X–U590E–70	21 – 28
	21 – 28
F2X–U591A–01	25 – 31
F2C–U591C–00	25 – 32
F2C–U591D–01	25 – 33
F2X–U5983–00	21 – 35
F1S–U725E–01	11 – 38
F2X–U72C0–00	11 – 37
6CN–U72M2–00	11 – 25
F2S–U732B–00	19 – 13
EU0–U7354–00–01	19 – 12

PART NO.	REF. NO.
EU0–U7354–00–03	19 – 12
EU0–U7354–00–05	19 – 12
EU0–U7354–00–10	19 – 12
EU0–U7354–00–20	19 – 12
F1B–U751G–00	27 – 13
F2C–U753B–01	27 – 16
F4G–U7550–02	27 – 1
F4G–U7555–00	27 – 6
F2C–U7557–01	11 – 51
F2C–U7564–00	27 – 17
GJ1–U7578–11	18 – 27
	18 – 28
GJ1–U7578–21	18 – 26
F1S–U757B–01	27 – 14
F2N–U758D–00	27 – 11
F2S–U759B–00	26 – 40
	26 – 41
F1K–U759C–00	21 – 34
	26 – 44
F1W–U759C–01	26 – 42
	26 – 43
F1B–U761D–02	22 – 4
F2S–U7711–02	26 – 15
6EY–U771G–00	22 – 7
F1W–U771H–00	22 – 46
F4G–U773D–00	10 – 2
F4L–U773D–00	26 – 46
F4G–U773D–10	10 – 31
6EX–U773E–00	22 – 10
6EY–U773E–00	22 – 8
F3Y–U7767–00	26 – 30
F1B–U7773–00	26 – 16
F4G–U7823–01	21 – 18
F2X–U7831–00	26 – 19
GP7–U7832–01	26 – 21
F2X–U7833–00	26 – 20
GP7–U7834–10	26 – 25
GP7–U7835–00	26 – 22
GP7–U783F–00	26 – 26
F2X–U7844–01	26 – 27
F0D–U7856–10	26 – 36
F1K–U785G–00	26 – 34
F0D–U785G–10	18 – 15
GP7–U785H–00	26 – 31
F2N–U8169–00	22 – 36
	22 – 37
F2S–U8211–00	18 – 8
EU0–U8217–H2	18 – 4

PART NO.	REF. NO.
EU0–U821D–00	18 – 14
F1K–U8221–00	18 – 13
F1S–U8221–00	18 – 11
	26 – 45
	27 – 10
EU0–U8221–30	18 – 12
F3J–U822E–00	18 – 22
F2S–U8244–00	25 – 17
F2X–U8262–00	20 – 11
F1W–U826C–00	17 – 1
F3Y–U8285–00	28 – 39
F1X–U828E–01	20 – 8
F2P–U828K–00	21 – 37
F1W–U828M–00	18 – 32
	18 – 37
	18 – 40
	18 – 44
	22 – 15
	24 – 6
	26 – 9
	26 – 12
	27 – 19
	27 – 22
F3J–U8368–01	18 – 35
F1W–U8376–00	17 – 3
F3P–U8571–00	11 – 49
	11 – 50
F2X–U8572–00	11 – 43
	11 – 44
F2S–U8577–00	11 – 45
F2S–U8592–00	18 – 5
F2S–U8593–00	18 – 6
F2N–U883B–00	12 – 20
F2N–U883E–00	12 – 17
F1S–U883N–01	22 – 31
F1S–U883P–01	22 – 32
F1X–U883T–01	22 – 33
F2S–U890L–05	25 – 11
F1K–U892D–00	12 – 21
F4G–U892F–00	27 – 2
F2X–U89A8–00	23 – 27
F2X–U89A8–60	23 – 27
F2X–U89A8–70	23 – 27
F2X–U89A8–80	23 – 27
F2X–U89A9–00	23 – 28
F2X–U89A9–60	23 – 28
F2X–U89A9–70	23 – 28
F2X–U89A9–80	23 – 28

PART NO.	REF. NO.
F2X–U89AA–00	23 – 29
F2X–U89AA–60	23 – 29
F2X–U89AA–70	23 – 29
F2X–U89AA–80	23 – 29
F2X–U89AB–00	23 – 30
F2X–U89AB–60	23 – 30
F2X–U89AB–70	23 – 30
F2X–U89AB–80	23 – 30
F2X–U89AC–00	23 – 31
F2X–U89AC–60	23 – 31
F2X–U89AC–70	23 – 31
F2X–U89AC–80	23 – 31
F2X–U89AD–00	23 – 32
F2X–U89AD–60	23 – 32
F2X–U89AD–70	23 – 32
F2X–U89AD–80	23 – 32
F1S–U8K31–03	18 – 29
6EY–W0001–01	34 – 1
6EY–W0001–21	34 – 18
6EY–W009B–01	2 – 1
60E–XR132–01	12 – 4
90105–06027	1 – 5
90105–06035	10 – 29
90105–06087	2 – 15
90105–06214	2 – 13
90105–06215	2 – 14
90105–06826	21 – 15
90105–06M07	2 – 25
90105–06M15	8 – 21
90105–07004	4 – 4
90105–08243	5 – 9
90105–08860	22 – 34
	22 – 35
90105–10M49	19 – 6
90105–12101	3 – 12
90109–06295	4 – 20
90109–06308	2 – 12
90109–066F0	1 – 14
90109–06832	12 – 18
90109–06M92	19 – 3
90109–08041	11 – 52
90110–06040	22 – 30
90110–06172	7 – 7
	7 – 10
90110–06191	23 – 3
	23 – 4
90110–06274	4 – 17
90110–06287	7 – 12

PART NO.	REF. NO.
90110–06335	7 – 13
90110–06382	29 – 3
90110–06822	11 – 21
90110–08212	14 – 5
90111–06803	20 – 14
	20 – 24
90119–05803	18 – 20
90119–06078	1 – 19
90119–06832	18 – 9
90119–06880	20 – 3
90119–06882	20 – 5
	20 – 16
	20 – 26
90119–06889	11 – 10
90119–06891	12 – 13
	13 – 3
90119–06893	11 – 5
	28 – 40
90119–069UH	30 – 24
90119–069UP	25 – 5
	25 – 10
90119–069UX	13 – 7
90119–06M88	16 – 7
90119–06MA3	17 – 20
90119–08029	9 – 9
90119–08034	9 – 4
90119–08093	9 – 10
90119–08097	9 – 5
90119–08169	6 – 3
90119–08823	11 – 42
	11 – 47
	19 – 10
	19 – 11
90119–08827	11 – 48
	30 – 26
90119–08828	25 – 18
	25 – 28
90119–08836	30 – 22
90119–08840	11 – 35
	13 – 5
90119–08851	28 – 41
90119–08859	19 – 8
	19 – 9
90119–08861	22 – 51
	22 – 52
90119–089U7	11 – 55
90119–08M22	6 – 4
90119–09004	2 – 3

PART NO.	REF. NO.
90119–10004	1 – 8
90119–10804	25 – 26
90119–10810	11 – 3
	11 – 32
90149–05903	31 – 6
90149–06190	7 – 3
90150–05807	18 – 31
90151–06024	2 – 7
90154–06017	31 – 5
90160–05003	16 – 29
90169–049U1	26 – 23
90176–08080	5 – 19
90179–08327	3 – 4
90179–20010	3 – 24
90201–06801	13 – 9
	13 – 12
90201–068G0	29 – 4
90201–06906	28 – 6
90201–099U3	25 – 22
90201–10591	3 – 34
90201–10801	11 – 39
90201–109U6	25 – 13
90201–121H0	3 – 13
90201–20030	3 – 22
90201–27800	12 – 11
90201–30013	14 – 6
90208–20001	3 – 23
90215–10003	3 – 33
90267–329UR	26 – 24
90267–409U5	18 – 36
90267–48802	21 – 36
90267–48806	24 – 3
	24 – 4
90267–48825	23 – 19
	23 – 20
90267–489U1	17 – 2
	17 – 4
	18 – 7
	20 – 7
	20 – 18
	20 – 28
	21 – 33
	26 – 38
	27 – 5
90267–489U2	19 – 14
	26 – 5
	30 – 21
90267–489U6	18 – 33

PART NO.	REF. NO.
90267–489U6	18 – 38
	18 – 41
	18 – 45
	22 – 16
	24 – 7
	26 – 7
	26 – 10
	26 – 13
	27 – 20
	27 – 23
90267–489U8	22 – 5
	23 – 9
	23 – 10
90269–08801	21 – 22
	21 – 24
90280–03045	3 – 11
90387–06119	16 – 9
	28 – 16
90387–06289	12 – 16
90387–06319	13 – 8
90387–06M05	8 – 10
90387–08M06	11 – 36
90387–08M30	13 – 6
90387–08M37	6 – 2
	6 – 15
90401–20008	7 – 16
90430–06M03	2 – 26
90430–08119	1 – 7
90430–08209	7 – 24
	34 – 10
90430–12002	11 – 54
90445–14807	11 – 28
90445–16019	10 – 15
90445–16020	10 – 18
90445–18012	10 – 9
90445–18018	10 – 25
90445–18020	8 – 22
90445–18M06	7 – 19
90445–20804	22 – 9
90445–21015	10 – 13
90446–20MF5	11 – 29
90446–24M44	10 – 16
90446–24M46	11 – 26
90446–24M89	10 – 5
90446–24MF4	8 – 23
90447–19004	8 – 17
90447–19014	8 – 28
	10 – 10

PART NO.	REF. NO.
90450–90002	6 – 5
90450–99801	27 – 12
90450–99804	27 – 8
90450–99808	9 – 12
90450–99809	9 – 13
90464–20005	17 – 23
90464–32801	18 – 23
	18 – 24
	18 – 25
	18 – 34
	18 – 39
	18 – 46
	22 – 17
	26 – 11
	26 – 14
	27 – 21
90464–35132	8 – 30
	10 – 12
	17 – 9
90464–99804	24 – 8
90465–11829	11 – 30
	18 – 18
	22 – 6
	26 – 32
	26 – 33
	26 – 35
90465–13M18	6 – 6
90465–13M39	17 – 10
90467–089U1	18 – 16
90467–110A1	8 – 26
90467–150A1	10 – 17
90467–150A5	10 – 4
	27 – 25
90467–160A0	10 – 11
	10 – 20
	10 – 22
	10 – 24
	10 – 26
90467–170A4	8 – 19
	8 – 24
	8 – 29
90467–170A5	7 – 21
90467–180A5	22 – 14
90467–200A3	8 – 18
	10 – 14
	10 – 33
	22 – 12
90467–240A0	10 – 34

PART NO.	REF. NO.
90467–240A3	22 – 13
90480–06M46	8 – 8
90480–19800	20 – 9
90480–22M15	6 – 1
	6 – 14
90601–118UF	11 – 27
	22 – 3
90601–155U4	12 – 19
	26 – 28
	26 – 29
90601–179U8	27 – 7
90601–200U2	18 – 42
	18 – 43
	27 – 24
90605–502U1	21 – 21
91314–06065	1 – 17
91317–06014	14 – 11
91317–06035	14 – 9
91380–04030	29 – 6
91380–06016	17 – 17
91380–06020	8 – 11
92990–06100	15 – 10
92990–10600	17 – 12
92990–12200	11 – 53
	22 – 27
92990–16600	11 – 17
9299R–05200	22 – 41
	22 – 42
	23 – 11
	23 – 12
9299R–06200	21 – 17
9299R–08200	25 – 20
	25 – 29
9299R–10200	25 – 14
	25 – 27
93101–25M55	12 – 6
	34 – 20
93101–28002	11 – 16
	34 – 25
93101–28M66	11 – 15
	34 – 24
93101–40001	3 – 18
	34 – 4
93101–40002	3 – 19
	34 – 5
93102–25009	12 – 9
	34 – 21
93210–17010	2 – 16

PART NO.	REF. NO.
93210–17010	34 – 15
93210–19123	1 – 13
93210–19522	8 – 4
93210–19812	12 – 5
	34 – 19
93210–24M79	8 – 15
93210–32172	17 – 19
93210–44003	11 – 20
	34 – 26
93211–65800	11 – 7
	34 – 22
93306–00702	3 – 15
93306–205A3	12 – 8
93306–205U0	11 – 11
93306–30323	2 – 5
93306–304U1	11 – 13
93306–90901	3 – 16
93310–42239	3 – 29
93450–19095	3 – 10
93450–32152	2 – 9
93606–12019	9 – 3
	9 – 8
	11 – 31
	12 – 15
	19 – 7
93606–19M23	8 – 6
93700–06M03	12 – 2
94580–25060	7 – 15
94591–57140	4 – 14
94702–00409	16 – 1
95024–06012	2 – 30
95024–06020	7 – 22
95024–08012	1 – 6
95317–16700	11 – 18
95380–06600	13 – 10
	13 – 13
95380–06700	15 – 9
9538R–06700	28 – 7
95612–08625	5 – 18
95720–06300	30 – 11
95720–08300	30 – 14
9572R–05300	22 – 43
	22 – 44
9572R–06300	21 – 16
	26 – 18
9572R–08300	22 – 19
	22 – 20
	25 – 19

PART NO.	REF. NO.
9572R–08300	25 – 23
	25 – 30
	25 – 37
9572R–10300	11 – 40
	25 – 15
95812–06012	4 – 22
95812–08070	2 – 4
95814–06020	5 – 10
	8 – 12
	16 – 11
95814–06035	8 – 7
95814–06055	8 – 13
95814–08020	7 – 23
95880–06016	16 – 5
97012–10025	3 – 32
97513–05514	14 – 12
97513–08514	18 – 48
97513–08530	15 – 8
97513–08535	5 – 17
97513–08555	2 – 21
97595–06612	16 – 18
97702–50520	5 – 15
97780–60520	17 – 8
9788R–05025	22 – 40
97E95–06520	17 – 14
97E95–08540	2 – 27
99009–52500	12 – 7
99530–08016	7 – 11
99530–10014	2 – 10
99530–10114	2 – 11
99590–08012	2 – 20
99590–14016	11 – 2
99780–12600	22 – 26

PART NO.	REF. NO.

PART NO.	REF. NO.