YAMAHA

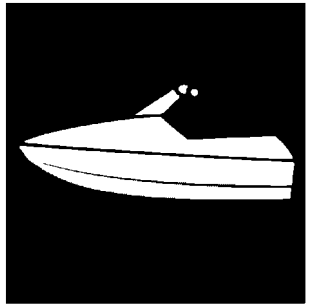

PARTS CATALOGUE

WaveRunner EX
EX1050C-W (F3YM /6GAK/6GA3)

YAMAHA
GENUINE
Parts & Accessories

1WF3Y-100EA

( )

EX1050C-W
PARTS CATALOGUE
©2020 by Yamaha Motor Co., Ltd.
1st edition, August 2020
All rights reserved.
Any reprinting or unauthorized use
without the written permission of
Yamaha Motor Co., Ltd.
is expressly prohibited.
Printed in Japan.

FOREWORD

This Parts Catalogue is related to the parts for the model(s) on the cover page. When you are ordering replacement parts, please refer to this Parts Catalogue and quote both part numbers and part names correctly.

1. Modifications or additions which have been made after the issue of the Parts Catalogue will be announced in the Parts News.
   It is advisable that you make the necessary corrections to the Parts Catalogue according to the Parts News.

2. Abbreviations
   The following abbreviations are used in this Parts Catalogue.

   "UR" Use specified parts number.

   "UN" Use as many as needed.

   "AP" Alternate Parts

   "LM" Locally Made (Parts need to be ordered locally)

   "F#" Frame No. (Applicable machine No.)

   "O/S" Over Size

3. The number of components for assembly
   - Parts, which are to be supplied in an assembly, are listed with a dot (.) in front of the part name as shown below.
   - The numeral appearing to the right of each component part indicates the quantity of parts for each assembly unit.

PART NO.	DESCRIPTION	Q'TY	REMARKS
2F5–83310–60	FRONT FLASHER LIGHT ASSY	2	
115–83311–60	.BULB (6V–18W)	1	

4. Applicable colours of graphics are represented in the "REMARKS" as shown below.

PART NO.	DESCRIPTION	Q'TY	REMARKS
2N4–24110–00–X5	FUEL TANK COMP.	2	MXR
3J1–24240–10	.GRAPHIC, FUEL TANK	1	FOR MXR

5. Note that the illustrations for reference in finding parts numbers are not to be used for assembling. When assembling, please use the applicable service manual.

6. The asterisk (*) before a reference number indicates modified items after the first edition.

7. Applicable Serial No.

Engine Serial No.

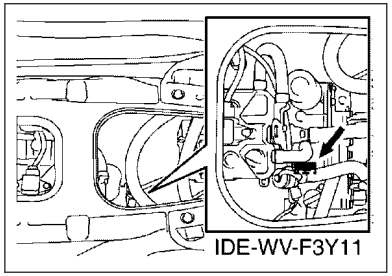

Primary Identification No.

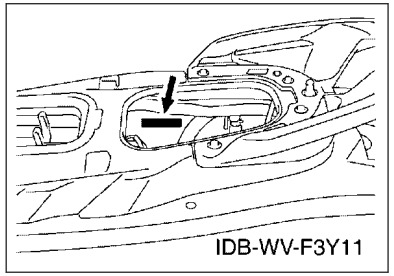

8. Applicable Colour Code (The (*) mark shows Model colour.)

Abbreviation	Colour Name	Colour Code
PURW(*)	PURE WHITE	0240

9. Quantity Column Information

Column No.	Name Of Q'ty Column	Destination
1	F3YM	CANADA, EUROPE

10. Applicable Starting Serial No.

Engine Serial No.

Serial No.	Name Of Q'ty Column	Model Code

Primary Identification No.

Serial No.	Name Of Q'ty Column	Model Code
F3Y-832661	F3YM	F3YM

CONTENTS

CYLINDER....1
CRANKCASE.... 2
CRANKSHAFT & PISTON....4
VALVE.... 6
INTAKE....8
INTAKE 2....9
OIL PUMP....10
OIL COOLER....11
EXHAUST 1....13
EXHAUST 2....14
JET UNIT 1....16
JET UNIT 2....18
GENERATOR....19
STARTING MOTOR....20
ELECTRICAL 1....21
ELECTRICAL 2....23
ELECTRICAL 3....24
ENGINE MOUNT....26
ENGINE HATCH 1....27
ENGINE HATCH 2....28
HULL & DECK....29
GUNWALE & MAT....31
VENTILATION....32
SEAT & UNDER LOCKER....33
FUEL TANK....34
EXHAUST 3....36
CONTROL CABLE....37
STEERING 1....38
STEERING 2....39
STEERING 3....40
GRAPHICS....41
IMPORTANT LABELS....42
REPAIR KIT 1....43

INDEX

NUMERICAL INDEX....44

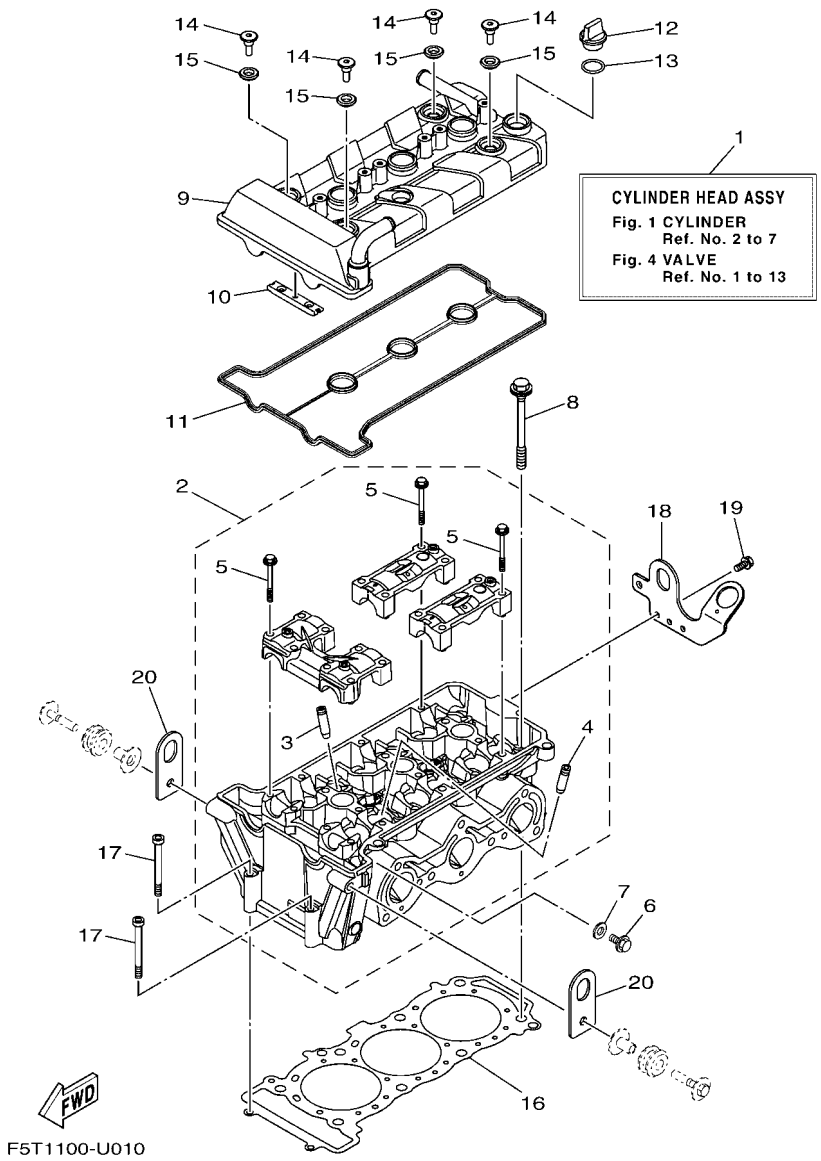

FIG. 1 CYLINDER

REF. NO.	PART NO.	DESCRIPTION	F3YM					REMARKS
1	6EY–11110–00	CYLINDER HEAD COMPLETE	1					
2	6EY–11102–00	CYLINDER HEAD ASSY	1					
3	2C0–11133–11	.GUIDE, VALVE 1	6					
4	8HF–11134–10	.GUIDE, VALVE 2	6					
5	90105–06027	.BOLT, FLANGE	16					
6	95024–08012	BOLT, FLANGE (SMALL HEAD)	1					
7	90430–08119	GASKET	1					
8	90119–10004	BOLT, WITH WASHER	8					
9	6EY–11191–10	COVER, CYLINDER HEAD 1	1					
10	5BE–12241–00	GUIDE, STOPPER 2	1					
11	6EY–11193–00	GASKET, HEAD COVER 1	1					
12	3Y1–15363–10	PLUG, OIL	1					
13	93210–19123	O-RING	1					
14	90109–066F0	BOLT	4					
15	5VY–1111G–00	RUBBER, MOUNT 1	4					
16	6EY–11181–00	GASKET, CYLINDER HEAD 1	1					
17	91314–06065	BOLT, HEXAGON SOCKET HEAD	2					
18	6EY–1111E–10	HANGER, ENGINE 2	1					
19	90119–06078	BOLT, WITH WASHER	2					
20	6EY–11119–00	HANGER, ENGINE	2					

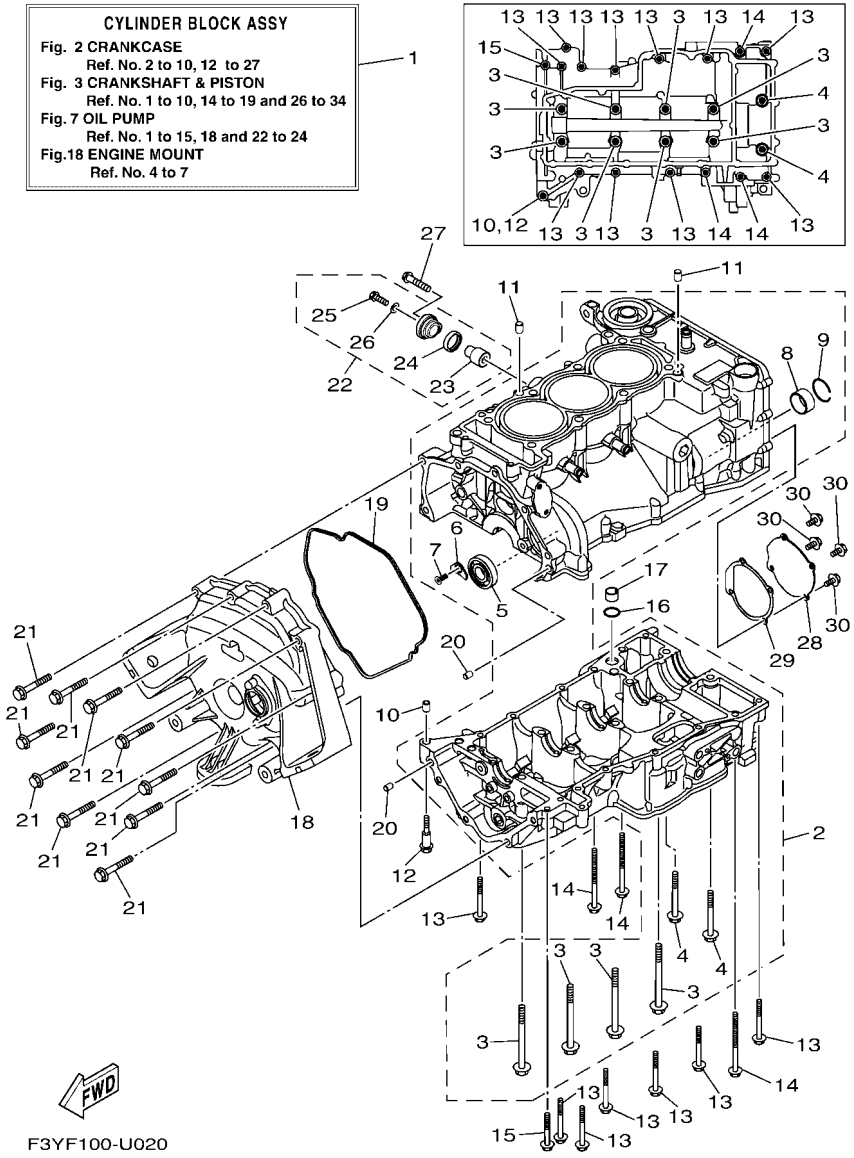

FIG. 2 CRANKCASE

REF. NO.	PART NO.	DESCRIPTION	F3YM					REMARKS
1	6EY–W009B–01	CYLINDER BLOCK ASSY	1					
2	6EY–15109–09	CRANKCASE ASSY	1					
3	90119–09004	.BOLT, WITH WASHER	8					
4	95812–08070	.BOLT, FLANGE	2					
5	93306–30323	.BEARING	1					
6	4JT–15381–01	.PLATE, BEARING COVER	1					
7	90151–06024	.SCREW, COUNTERSUNK	1					
8	8ES–11428–01	.BEARING 1	1					
9	93450–32152	.CIRCLIP	1					
10	99530–10014	PIN, DOWEL	1					
11	99530–10114	PIN, DOWEL	2					
12	90109–06308	BOLT	1					
13	95814–06055	BOLT, FLANGE	11					
14	95814–06085	BOLT, FLANGE	3					
15	95814–06045	BOLT, FLANGE	1					
16	93210–17010	O-RING	1					
17	8ES–13284–00	PIPE	1					
18	6EY–15421–00	COVER, CRANKCASE 2	1					
19	6EY–15461–00	GASKET, CRANKCASE COVER 2	1					
20	99590–08012	PIN, DOWEL	2					
21	97513–08555	BOLT, WITH WASHER	10					
22	69J–11301–10	ANODE COVER ASSY	1					
23	68V–11325–02	.ANODE	1					
24	67F–11328–00	.GROMMET, ANODE	1					
25	90105–06M07	.BOLT, FLANGE	1					
26	90430–06M03	.GASKET	1					
27	97E95–08540	BOLT, HEXAGON W/W DEEP RECESS	1					

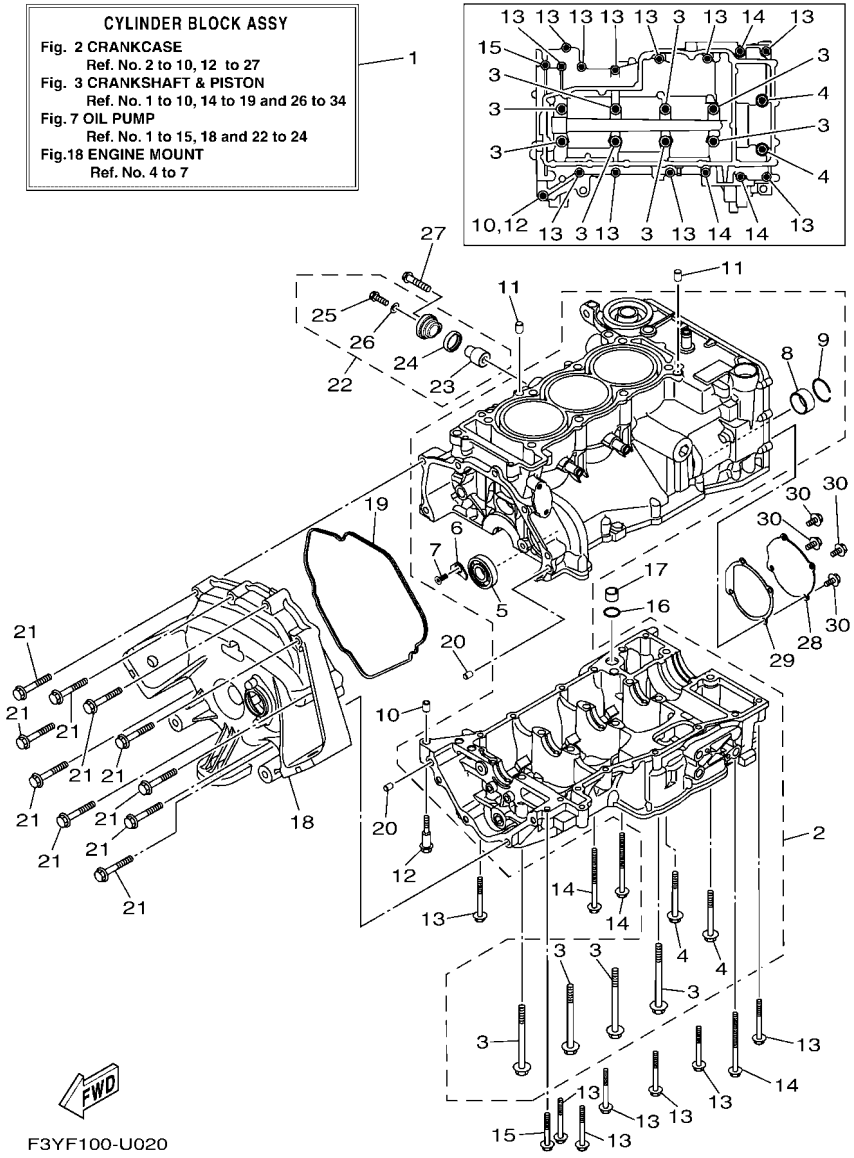

FIG. 2 CRANKCASE

REF. NO.	PART NO.	DESCRIPTION	F3YM					REMARKS
28	6EY–15589–01	PLATE	1					
29	6EY–15463–01	GASKET, 2	1					
30	95024–06012	BOLT, FLANGE (SMALL HEAD)	4					

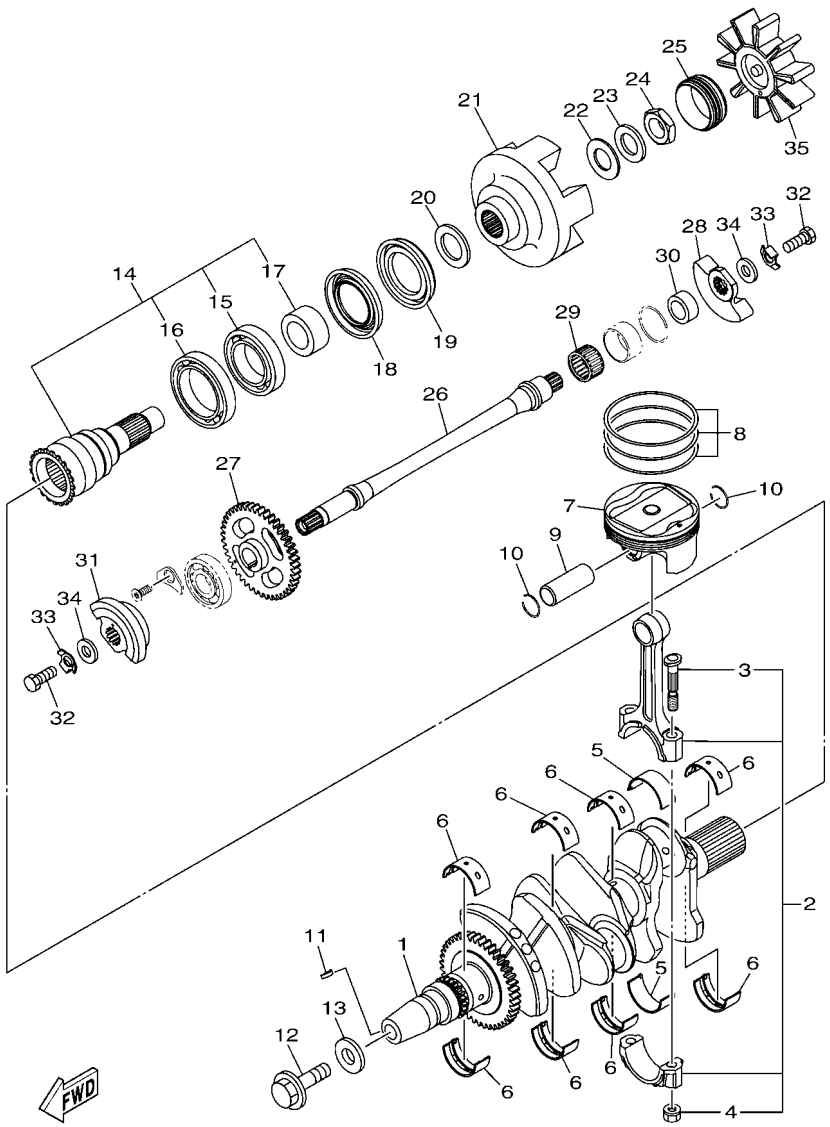

F3YD100-U031

FIG. 3 CRANKSHAFT & PISTON

REF. NO.	PART NO.	DESCRIPTION	F3YM					REMARKS
1	6EY–11400–00	CRANKSHAFT ASSY	1					
2	B0F–11650–00	CONNECTING ROD ASSY	3					
3	5JW–11654–00	.BOLT, CONNECTING ROD	2					
4	90179–08327	.NUT	2					
5	5JW–11656–00	PLANE BEARING, CONNECTING ROD	6					UR BLUE
	5JW–11656–10	PLANE BEARING, CONNECTING ROD	6					UR BLACK
	5JW–11656–20	PLANE BEARING, CONNECTING ROD	6					UR BROWN
	5JW–11656–30	PLANE BEARING, CONNECTING ROD	6					UR GREEN
	5JW–11656–40	PLANE BEARING, CONNECTING ROD	6					UR YELLOW
	5JW–11656–50	PLANE BEARING, CONNECTING ROD	6					UR PINK
6	3LD–11416–10	PLANE BEARING, CRANKSHAFT 1	8					UR BLACK
	3LD–11416–20	PLANE BEARING, CRANKSHAFT 1	8					UR BROWN
	3LD–11416–30	PLANE BEARING, CRANKSHAFT 1	8					UR GREEN
	3LD–11416–40	PLANE BEARING, CRANKSHAFT 1	8					UR YELLOW
	3LD–11416–50	PLANE BEARING, CRANKSHAFT 1	8					UR PINK
	3LD–11416–60	PLANE BEARING, CRANKSHAFT 1	8					UR RED
	3LD–11416–70	PLANE BEARING, CRANKSHAFT 1	8					UR WHITE
7	8KH–11631–00	PISTON (STD)	3					
8	8KH–11603–01	PISTON RING SET (STD)	3					
9	6EY–11633–00	PIN, PISTON	3					
10	93450–19095	CIRCLIP	6					
11	90280–03045	KEY, WOODRUFF	1					
12	90105–12101	BOLT, FLANGE	1					
13	90201–121H0	WASHER, PLATE	1					
14	6EY–11406–00	SHAFT ASSY	1					
15	93306–00702	.BEARING	1					
16	93306–90901	.BEARING	1					

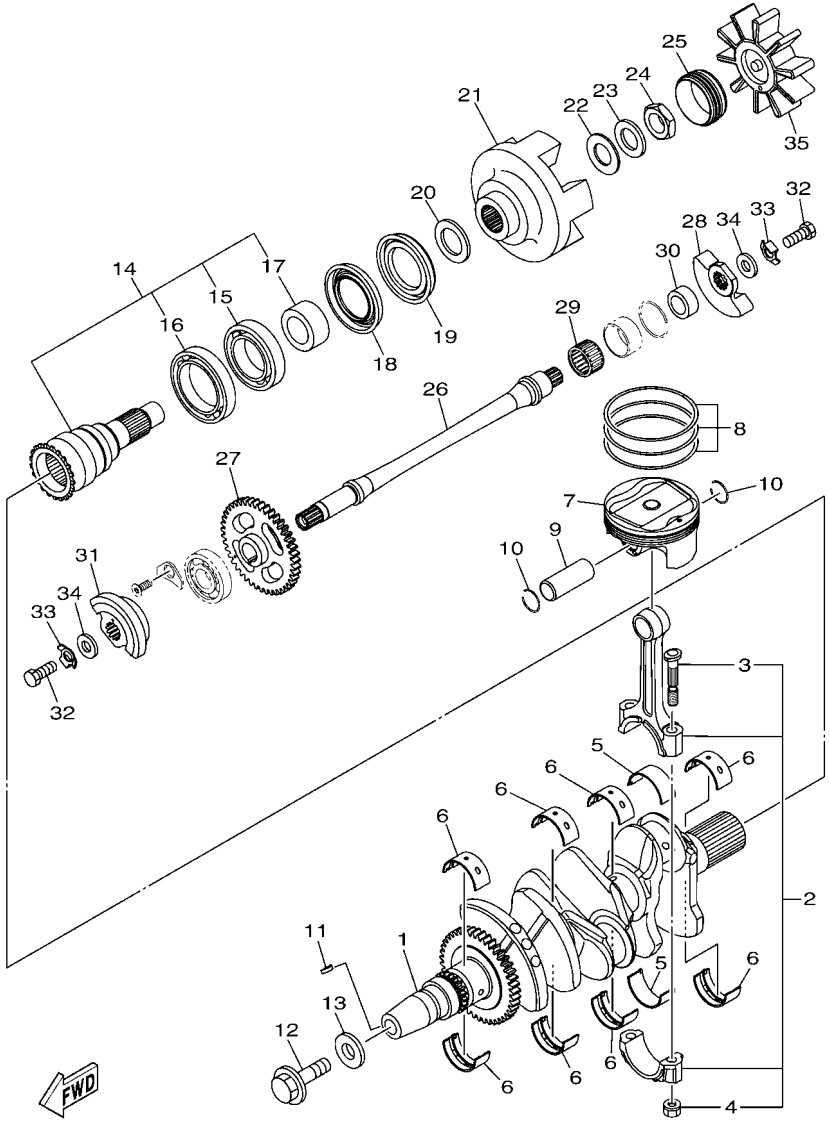

FIG. 3 CRANKSHAFT & PISTON

REF. NO.	PART NO.	DESCRIPTION	F3YM					REMARKS
17	6EY–11917–00	.COLLAR	1					
18	93101–40001	OIL SEAL	1					
19	93101–40002	OIL SEAL	1					
20	6EY–11557–00	WASHER 1	1					
21	6GA–11571–00	FLYWHEEL	1					
22	90201–20030	WASHER, PLATE	1					
23	90208–20001	WASHER, CONICAL SPRING	1					
24	90179–20010	NUT	1					
25	6EY–45155–00	CAP	1					
26	2HC–11407–00	SHAFT ASSY., 2	1					
27	6EY–11531–00	GEAR, BALANCE WEIGHT	1					
28	8ES–11454–00	WEIGHT 1	1					
29	93310–42239	BEARING	1					
30	6EY–11478–00	COLLAR	1					
31	2HC–11464–00	WEIGHT 2	1					
32	97012–10025	BOLT	2					
33	90215–10003	WASHER, LOCK	2					
34	90201–10591	WASHER, PLATE	2					
35	6EY–4581J–00	RUBBER SHAFT COUPLING	1					

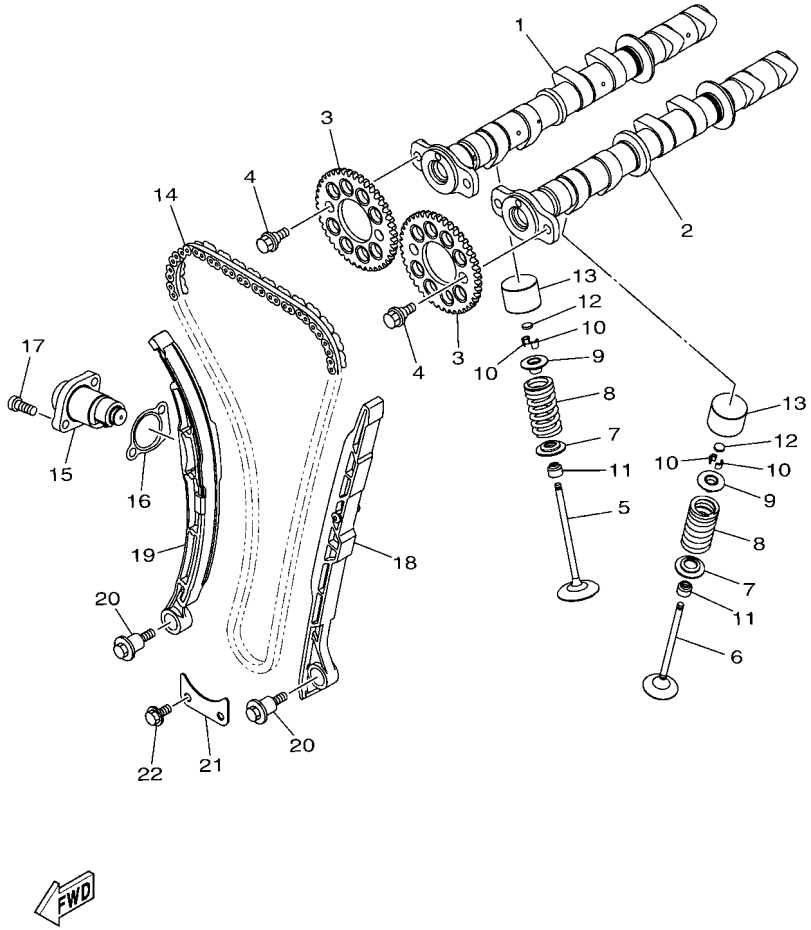

F4G1100-R040

FIG. 4 VALVE

REF. NO.	PART NO.	DESCRIPTION	F3YM					REMARKS
1	6EY–12170–00	CAMSHAFT ASSY 1	1					
2	6EY–12180–00	CAMSHAFT ASSY 2	1					
3	2HC–12176–00	SPROCKET, CAM CHAIN	2					
4	90105–07004	BOLT, FLANGE	4					
5	8GL–12111–10	VALVE, INTAKE	6					
6	8GL–12121–10	VALVE, EXHAUST	6					
7	1RC–12116–00	SEAT, VALVE SPRING	12					
8	8GL–12113–00	SPRING, VALVE INNER	12					
9	3D7–12117–00	RETAINER, VALVE SPRING	12					
10	1WG–12118–00	LOCK, VALVE SPRING RETAINER	24					
11	2HC–12119–00	SEAL, VALVE STEM	12					
12	1HX–12168–00	PAD, ADJUSTING 2 (1.20)	12					UR
	1HX–12168–20	PAD, ADJUSTING 2 (1.25)	12					UR
	1HX–12168–40	PAD, ADJUSTING 2 (1.30)	12					UR
	1HX–12168–60	PAD, ADJUSTING 2 (1.35)	12					UR
	1HX–12168–80	PAD, ADJUSTING 2 (1.40)	12					UR
	1HX–12168–A0	PAD, ADJUSTING 2 (1.45)	12					UR
	1HX–12168–F0	PAD, ADJUSTING 2 (1.50)	12					UR
	1HX–12168–H1	PAD, ADJUSTING 2 (1.55)	12					UR
	1HX–12168–K1	PAD, ADJUSTING 2 (1.60)	12					UR
	1HX–12168–M1	PAD, ADJUSTING 2 (1.65)	12					UR
	1HX–12168–R1	PAD, ADJUSTING 2 (1.70)	12					UR
	1HX–12168–U1	PAD, ADJUSTING 2 (1.75)	12					UR
	1HX–12168–W1	PAD, ADJUSTING 2 (1.80)	12					UR
	1HX–12168–Y1	PAD, ADJUSTING 2 (1.85)	12					UR
	1HX–12169–11	PAD, ADJUSTING 2 (1.90)	12					UR
	1HX–12169–31	PAD, ADJUSTING 2 (1.95)	12					UR

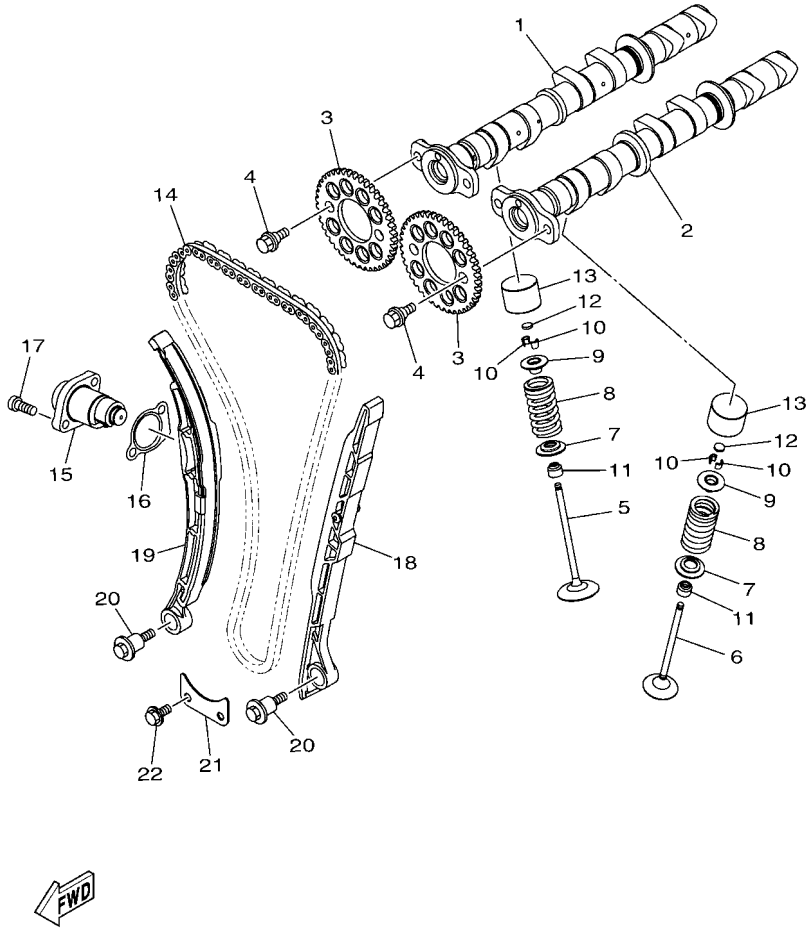

F4G1100-R040

FIG. 4 VALVE

REF. NO.	PART NO.	DESCRIPTION	F3YM					REMARKS
12	1HX–12169–50	PAD, ADJUSTING 2 (2.00)	12					UR
	1HX–12169–70	PAD, ADJUSTING 2 (2.05)	12					UR
	1HX–12169–90	PAD, ADJUSTING 2 (2.10)	12					UR
	1HX–12169–E0	PAD, ADJUSTING 2 (2.15)	12					UR
	1HX–12169–G0	PAD, ADJUSTING 2 (2.20)	12					UR
	1HX–12169–J0	PAD, ADJUSTING 2 (2.25)	12					UR
	1HX–12169–L0	PAD, ADJUSTING 2 (2.30)	12					UR
	1HX–12169–N0	PAD, ADJUSTING 2 (2.35)	12					UR
	1HX–12169–T0	PAD, ADJUSTING 2 (2.40)	12					UR
13	6EY–12153–01	LIFTER, VALVE	12					
14	94591–57140	CHAIN (98RH2010-140M)	1					
15	8KH–12210–00	TENSIONER ASSY, CAM CHAIN	1					
16	2C0–12213–00	GASKET, TENSIONER CASE	1					
17	90110–06274	BOLT, HEXAGON SOCKET HEAD	2					
18	6EY–12251–00	DAMPER, CHAIN 1	1					
19	2HC–12252–00	DAMPER, CHAIN 2	1					
20	90109–06295	BOLT	2					
21	6EY–12279–00	PLATE	1					
22	95812–06012	BOLT, FLANGE	2					

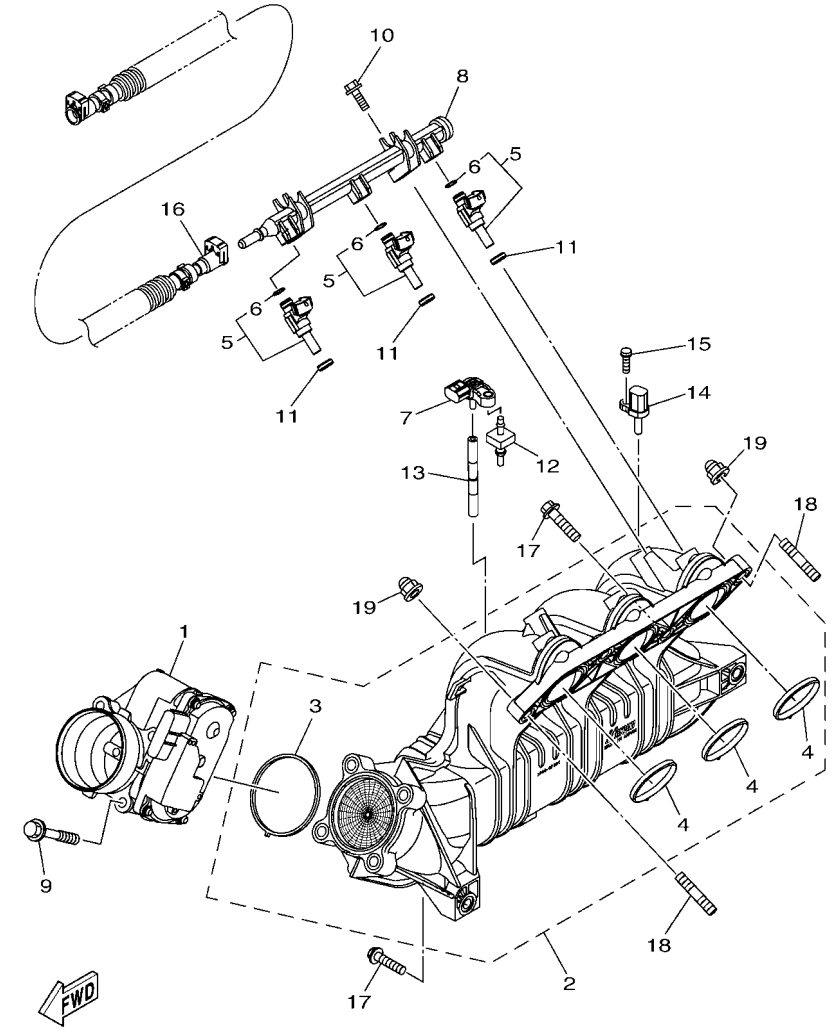

F3Y7100-T050

FIG. 5 INTAKE

REF. NO.	PART NO.	DESCRIPTION	F3YM					REMARKS
1	6EY–13750–00	THROTTLE BODY ASSY	1					
2	6EY–13641–01	MANIFOLD, INTAKE 1	1					
3	6EY–14156–00	.GASKET, INSULATING	1					
4	6EY–14126–00	.GASKET	3					
5	2HC–13761–00	INJECTOR	3					
6	68V–1416A–00	.O-RING	1					
7	5S7–82380–00	SENSOR, PRESSURE	1					
8	6EY–12880–00	DELIVERY PIPE	1					
9	90105–08243	BOLT, FLANGE	4					
10	95814–06020	BOLT, FLANGE	2					
11	8FP–13556–10	GASKET, MANIFOLD	3					
12	6BH–14445–00	GROMMET	1					
13	6EY–13532–00	HOSE, VACUUM SENSING 3	1					
14	8FP–85886–00	SENSOR, AIR TEMPERATURE	1					
15	97702–50520	SCREW, TAPPING	1					
16	6CN–2450B–10	FUEL HOSE ASSY	1					
17	97513–08535	BOLT, WITH WASHER	4					
18	95612–08625	BOLT, STUD	2					
19	90176–08080	NUT, CROWN	2					

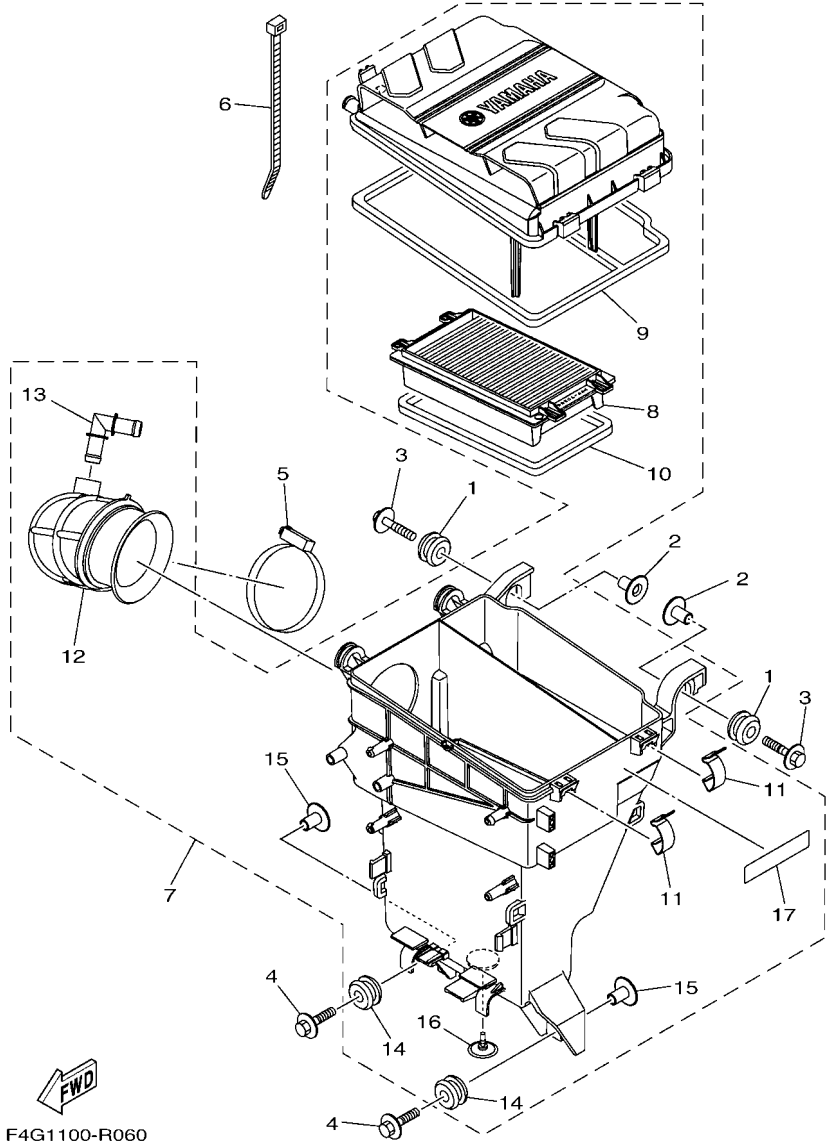

FIG. 6 INTAKE 2

REF. NO.	PART NO.	DESCRIPTION	F3YM					REMARKS
1	90480–22M15	GROMMET	2					
2	90387–08M37	COLLAR	2					
3	90119–08169	BOLT, WITH WASHER	2					
4	90119–08187	BOLT, WITH WASHER	2					
5	90450–90002	HOSE CLAMP ASSY	1					
6	90465–13M18	CLAMP	1					
7	6EY–14410–01	AIR CLEANER ASSY.	1					
8	6EY–14451–00	.ELEMENT, AIR CLEANER	1					
9	6EY–14462–00	.SEAL	1					
10	6EY–14452–00	.SEAL	1					
11	6EY–14436–00	.HOOK	2					
12	6EY–14419–00	.PIPE	1					
13	6EY–14485–00	.PIPE, JOINT	1					
14	90480–22M15	.GROMMET	2					
15	90387–08M37	.COLLAR	2					
16	6EY–14470–00	.VALVE	1					
17	60E–83627–00	.LABEL, CAUTION 7	1					

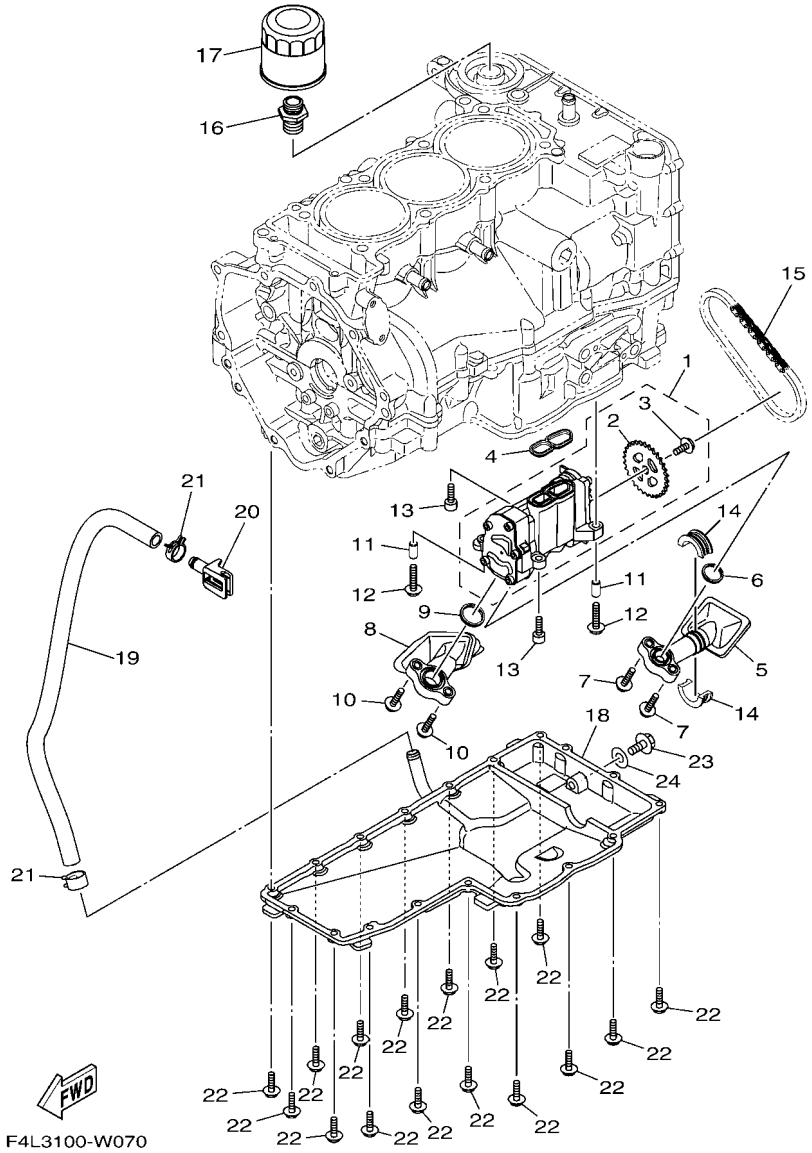

FIG. 7 OIL PUMP

REF. NO.	PART NO.	DESCRIPTION	F3YM					REMARKS
1	6EY–13300–00	OIL PUMP ASSY	1					
2	6EY–13355–00	.SPROCKET, DRIVEN	1					
3	90149–06190	.SCREW	1					
4	6EY–13563–00	GASKET	1					
5	6EY–13405–00	OIL PIPE COMP. 1	1					
6	6EY–13477–00	GASKET	1					
7	90110–06172	BOLT, HEXAGON SOCKET HEAD	2					
8	6EY–13406–00	OIL PIPE COMP. 2	1					
9	6EY–13476–00	GASKET	1					
10	90110–06172	BOLT, HEXAGON SOCKET HEAD	2					
11	99530–08016	PIN, DOWEL	2					
12	90110–06287	BOLT, HEXAGON SOCKET HEAD	2					
13	90110–06335	BOLT, HEXAGON SOCKET HEAD	2					
14	6EY–15486–00	GROMMET	2					
15	94580–25060	CHAIN (DID25 60LE)	1					
16	90401–20008	BOLT, UNION	1					
17	5GH–13440–61	ELEMENT ASSY, OIL CLEANER	1					
18	6EY–13417–10	COVER, STRAINER	1					
19	90445–18M06	HOSE (L500)	1					
20	6EY–13455–00	PLUG	1					
21	90467–170A5	CLIP	2					
22	95024–06020	BOLT, FLANGE (SMALL HEAD)	18					
23	95814–08020	BOLT, FLANGE	1					
24	90430–08209	GASKET	1					

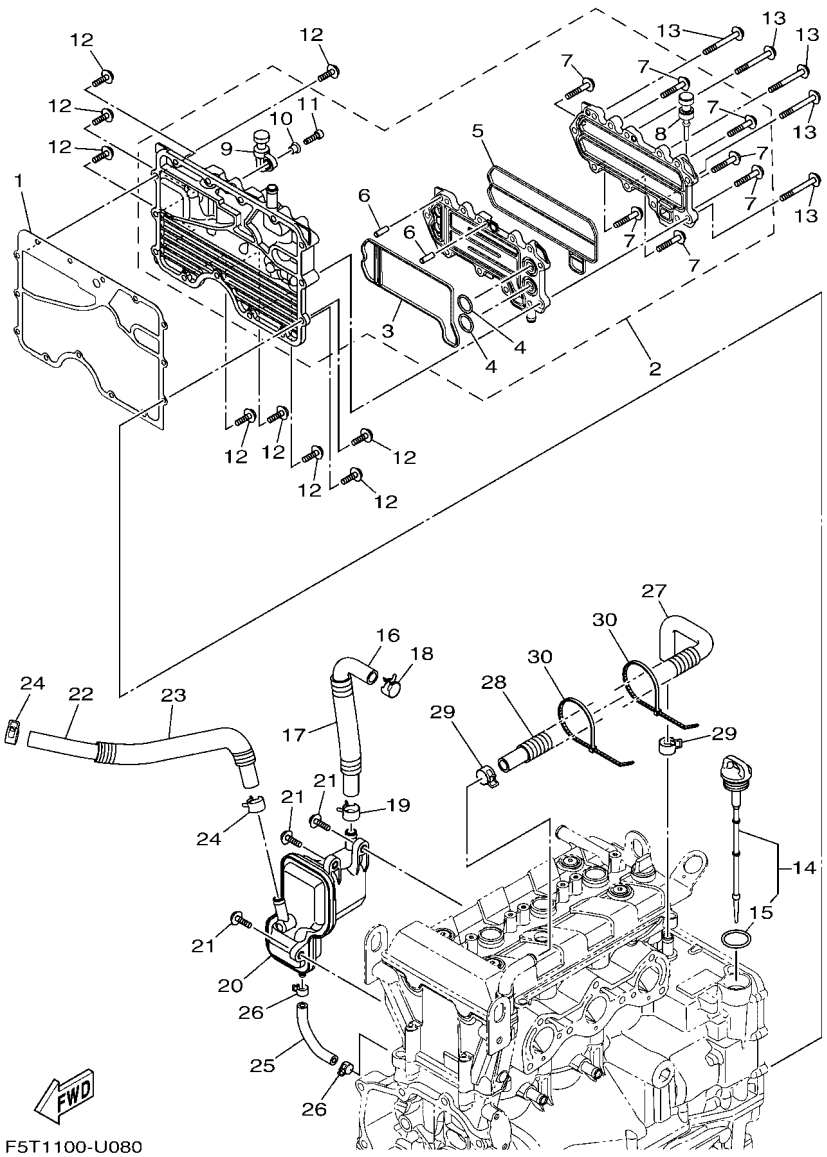

FIG. 8 OIL COOLER

REF. NO.	PART NO.	DESCRIPTION	F3YM					REMARKS
1	6EY–15453–00	GASKET	1					
2	6EY–13470–00	OIL COOLER ASSY	1					
3	6EY–13556–00	.GASKET, MANIFOLD	1					
4	93210–19522	.O-RING	2					
5	6EY–13557–00	.GASKET	1					
6	93606–19M23	.PIN, DOWEL	2					
7	95814–06035	.BOLT, FLANGE	7					
8	90480–06M46	.GROMMET	1					
9	6S5–81364–10	.GROMMET	1					
10	90387–06M05	.COLLAR	1					
11	91380–06020	.BOLT	1					
12	95814–06020	BOLT, FLANGE	9					
13	95814–06055	BOLT, FLANGE	5					
14	6EY–15362–10	PLUG, OIL LEVEL	1					
15	93210–24M79	.O-RING	1					
16	6EY–11166–10	PIPE, BREATHER 1	1					
17	90447–19004	HOSE, WITH SPRING (L130)	1					
18	90467–200A3	CLIP	1					
19	90467–170A4	CLIP	1					
20	6EY–11164–00	SEPERATOR, OIL	1					
21	90105–06M15	BOLT, FLANGE	3					
22	90445–18020	HOSE (L420)	1					
23	90446–24MF4	HOSE (L350)	1					
24	90467–170A4	CLIP	2					
25	6EY–11125–00	PIPE, BREATHER 4	1					
26	90467–110A1	CLIP	2					
27	6EY–11126–10	PIPE, BREATHER 3	1					

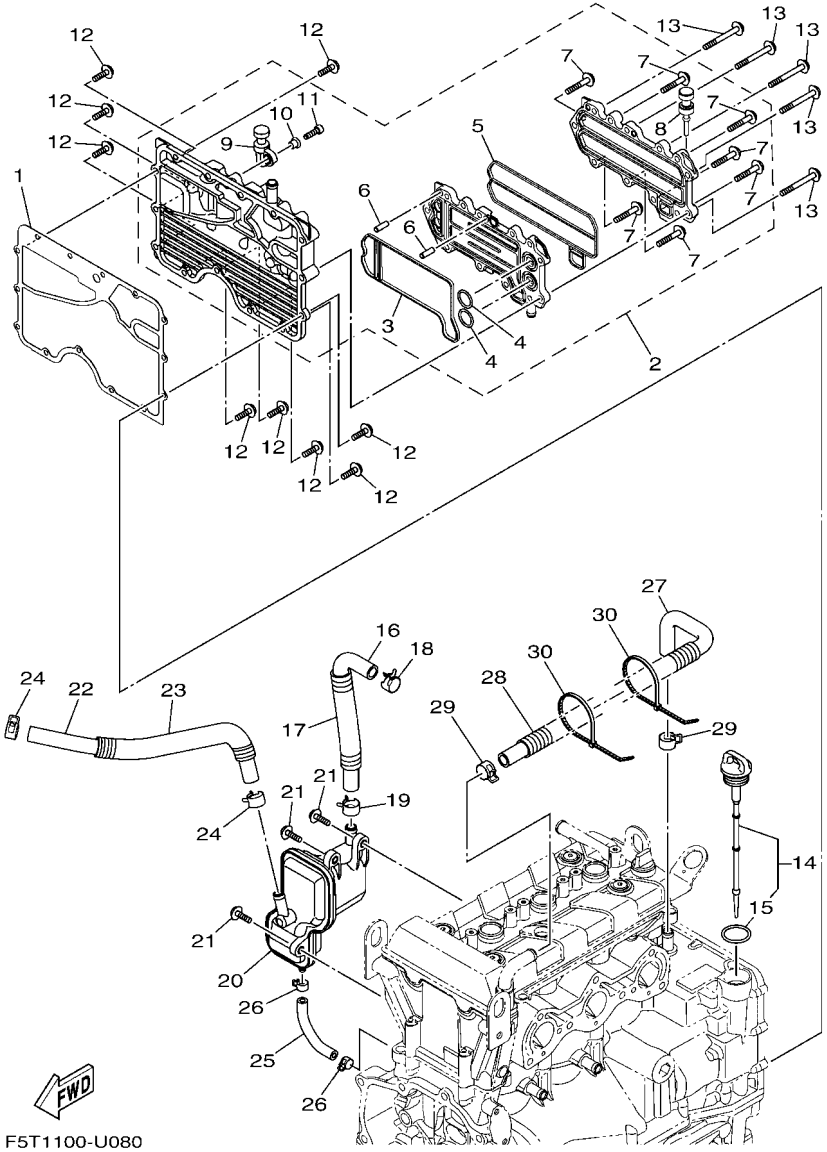

FIG. 8 OIL COOLER

REF. NO.	PART NO.	DESCRIPTION	F3YM					REMARKS
28	90447–19014	TUBE (L300)	1					
29	90467–170A4	CLIP	2					
30	90464–35132	CLAMP	2					

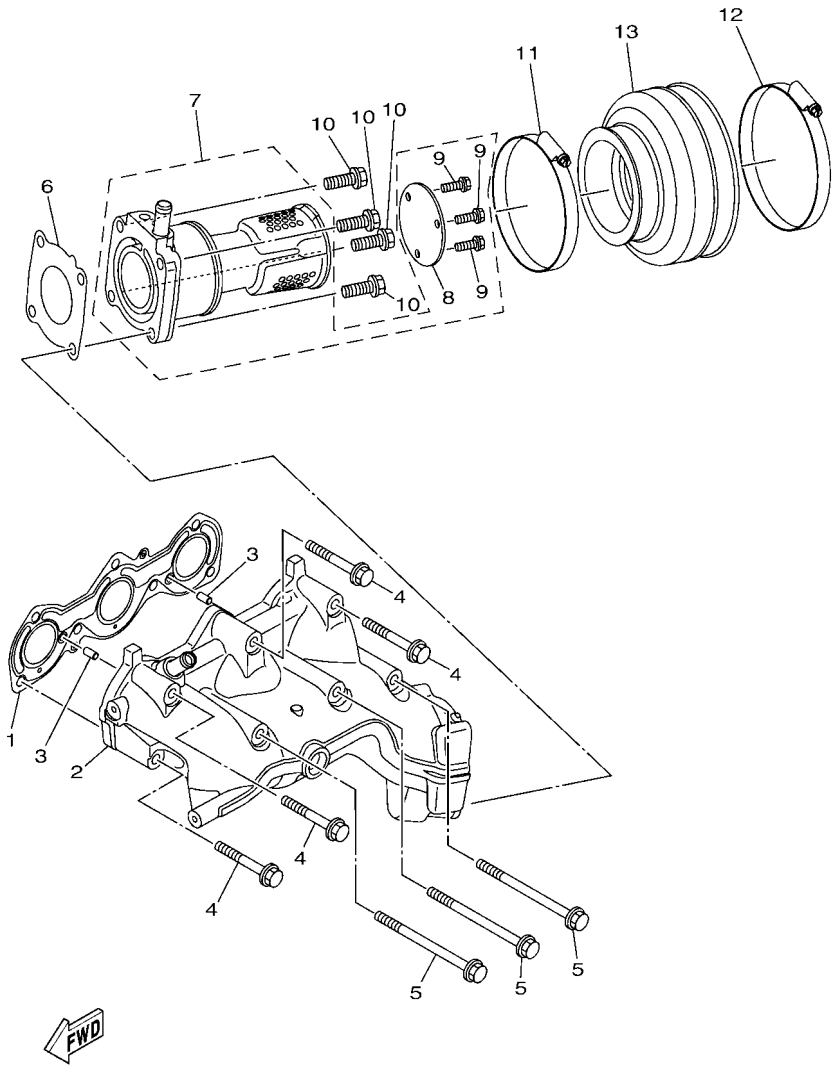

F3YD100-U090

FIG. 9 EXHAUST 1

REF. NO.	PART NO.	DESCRIPTION	F3YM					REMARKS
1	6GA–14613–00	GASKET, EXHAUST PIPE	1					
2	6GA–14711–00	MUFFLER 1	1					
3	93606–12019	PIN, DOWEL	2					
4	90119–08034	BOLT, WITH WASHER	4					
5	90119–08097	BOLT, WITH WASHER	3					
6	6GA–14739–00	GASKET, MUFFLER DAMPER 1	1					
7	6GA–14784–00	PIPE, TAIL	1					
8	6GA–1469W–00	.PLATE, SILENCER 6	1					
9	95024–06016	.BOLT, FLANGE (SMALL HEAD)	3					
10	95024–08030	BOLT,FLG,(SMALL HEAD)	4					
11	90450–99808	HOSE CLAMP ASSY	1					
12	90450–99810	HOSE CLAMP ASSY	1					
13	6GA–14752–00	PIPE, OUTLET	1					

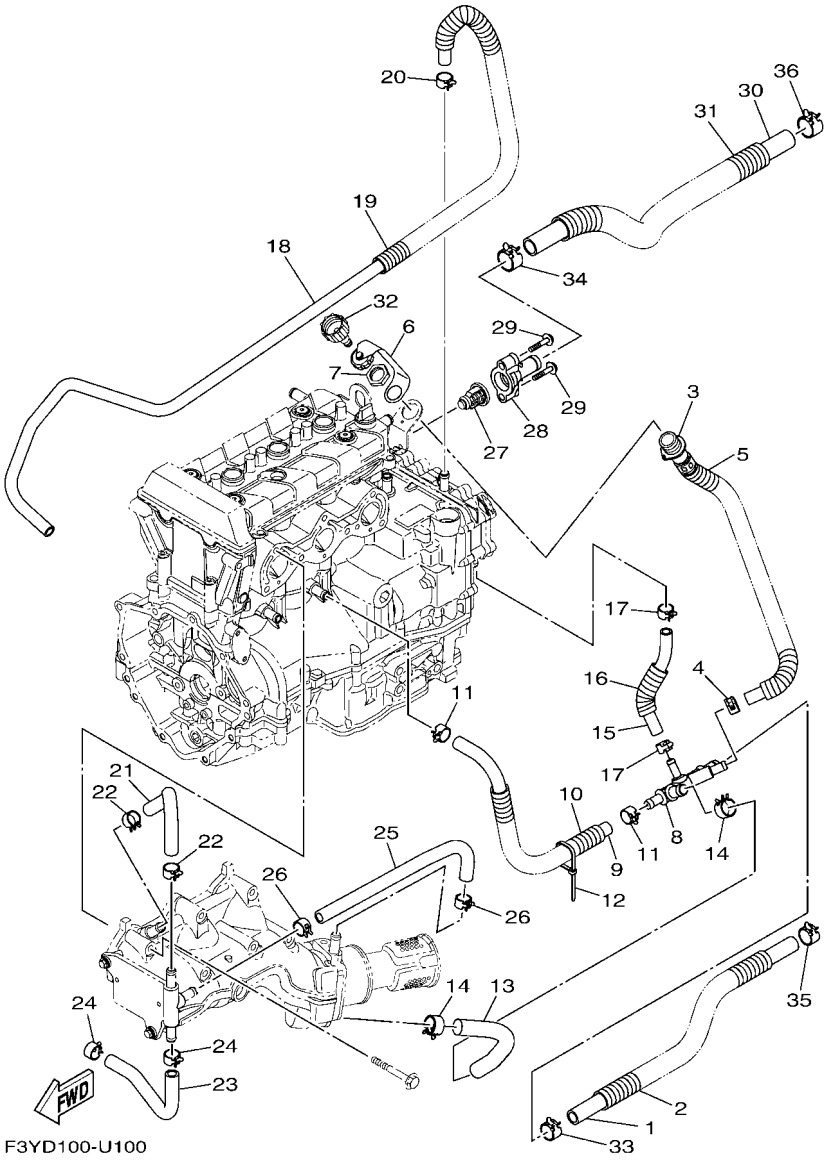

FIG. 10 EXHAUST 2

REF. NO.	PART NO.	DESCRIPTION	F3YM					REMARKS
1	6GA–E243E–00	HOSE 2	1					
2	F3Y–U773D–10	TUBE	1					
3	6EY–12580–00	JOINT ASSY	1					
4	90467–150A5	CLIP	1					
5	90446–24M89	HOSE (L420)	1					
6	6EY–84385–00	CAP,1	1					
7	EU0–61652–00	NUT	1					
8	6EY–12584–00	JOINT, HOSE 3	1					
9	90445–18012	HOSE (L400)	1					
10	90447–19014	TUBE (L300)	1					
11	90467–160A0	CLIP	2					
12	90464–35132	CLAMP	1					
13	90445–21015	HOSE (L170)	1					
14	90467–200A3	CLIP	2					
15	90445–16019	HOSE (L160)	1					
16	90446–24M44	HOSE (L70)	1					
17	90467–150A1	CLIP	2					
18	90445–16020	HOSE (L1600)	1					
19	6EY–24864–00	TUBE	1					
20	90467–160A0	CLIP	1					
21	6EY–12577–00	HOSE 2	1					
22	90467–160A0	CLIP	2					
23	6S5–12579–00	HOSE 4	1					
24	90467–160A0	CLIP	2					
25	90445–18018	HOSE (L370)	1					
26	90467–160A0	CLIP	2					
27	6D3–12411–00	THERMOSTAT	1					

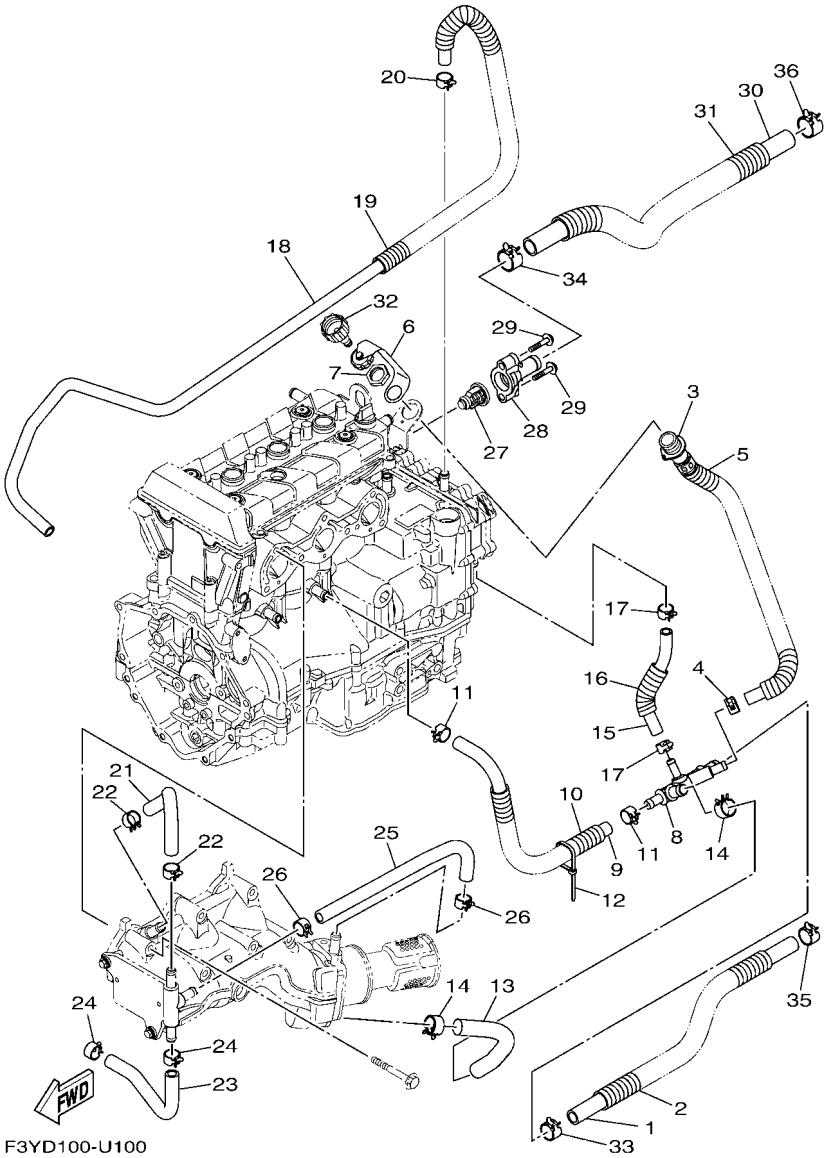

F3YD100-U100

FIG. 10 EXHAUST 2

REF. NO.	PART NO.	DESCRIPTION	F3YM					REMARKS
28	6EY–12413–00	COVER, THERMOSTAT	1					
29	90105–06035	BOLT, FLANGE	2					
30	6GA–E243A–00	HOSE 1	1					
31	F3Y–U773D–20	TUBE	1					
32	67X–E2590–00	CONDUCTION ASSY	1					FOR CAN
	67X–E2590–10	CONDUCTION ASSY	1					FOR EUR
33	90467–200A3	CLIP	1					
34	90467–240A0	CLIP	1					
35	90467–200A3	CLIP	1					
36	90467–240A3	CLIP	1					

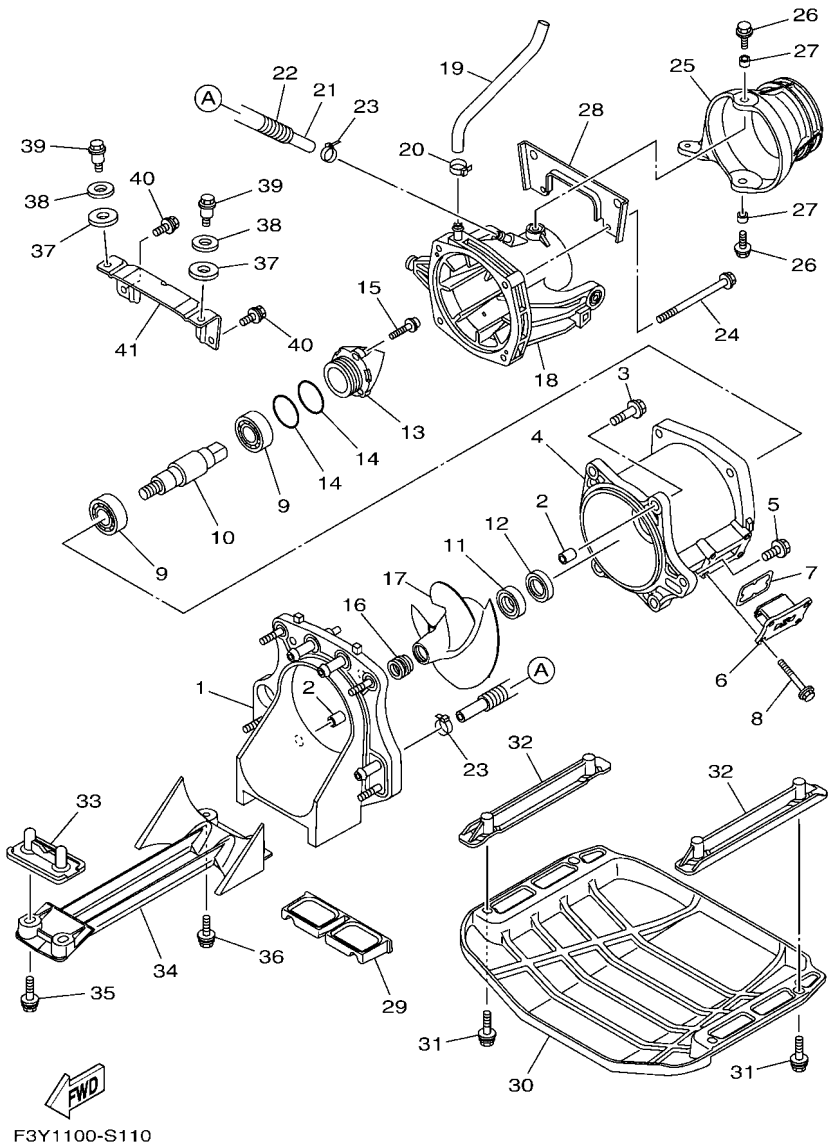

FIG. 11 JET UNIT 1

REF. NO.	PART NO.	DESCRIPTION	F3YM					REMARKS
1	6GA–G5831–00	PLATE, TRANSOM	1					
2	99590–14016	PIN, DOWEL	2					
3	90119–10067	BOLT, WITH WASHER	4					
4	6GA–R1312–01	HOUSING, IMPELLER	1					
5	90119–10808	BOLT, WITH WASHER	1					
6	6GA–G6882–00	FILTER	1					
7	6GA–G2414–00	O-RING	1					
8	90119–06889	BOLT, WITH WASHER	4					
9	93306–255X7	BEARING	2					
10	6GA–G5514–00	SHAFT, DRIVE 4	1					
11	93102–25M34	OIL SEAL	1					
12	93101–25M50	OIL SEAL	1					
13	6EX–R1326–10	CAP	1					
14	93210–44003	O-RING	2					
15	90110–06822	BOLT, HEXAGON SOCKET HEAD	3					
16	6DU–51319–00	CAP, IMPELLER	1					
17	6GA–R1321–00	IMPELLER	1					
18	6GA–R1318–00	NOZZLE	1					
19	6GA–U72M2–00	HOSE 1	1					
20	90601–118UF	BAND, HOSE 18	1					
21	90445–14025	HOSE (L220)	1					
22	90447–15005	TUBE (L180)	1					
23	90465–11829	CLAMP	2					
24	90119–08827	BOLT, WITH WASHER	4					
25	6BU–R1313–00	NOZZLE, DEFLECTOR	1					
26	90119–08840	BOLT, WITH WASHER	2					
27	90387–08M06	COLLAR	2					

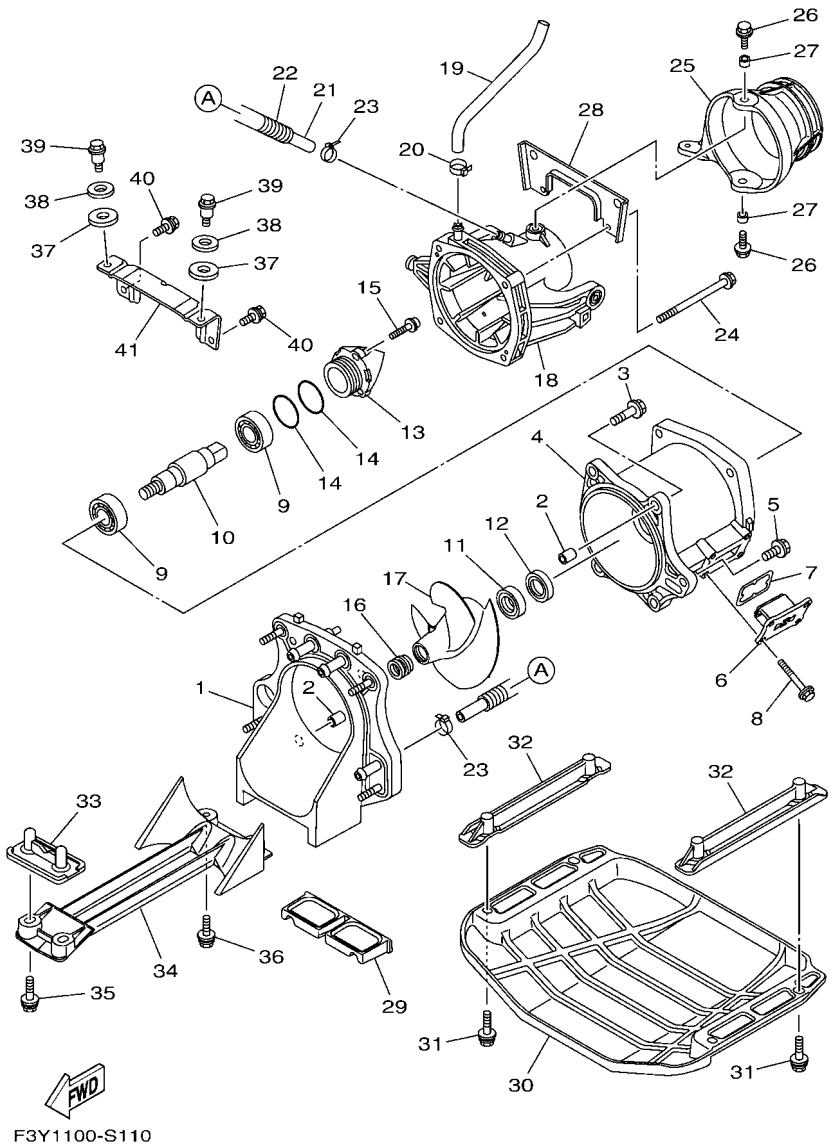

FIG. 11 JET UNIT 1

REF. NO.	PART NO.	DESCRIPTION	F3YM					REMARKS
28	6GA–R1959–00	BRACKET	1					
29	F3Y–U72C0–00	SPACER	1					
30	F3Y–U273B–10	PLATE 2	1					
31	F4L–U3222–00	BOLT	4					
32	F0V–U8572–01	BRACKET 2	2					
33	F2S–U8577–00	BRACKET, 3	1					
34	6GA–R1333–00	SCREEN, INTAKE	1					
35	F3Y–U1426–00	BOLT	2					
36	F3Y–U1426–00	BOLT	2					
37	90430–12002	GASKET	2					
38	92990–12200	WASHER, PLAIN	2					
39	90109–08041	BOLT	2					
40	90119–089U7	BOLT, WITH WASHER	2					
41	F3Y–U7557–00	BRACKET	1					

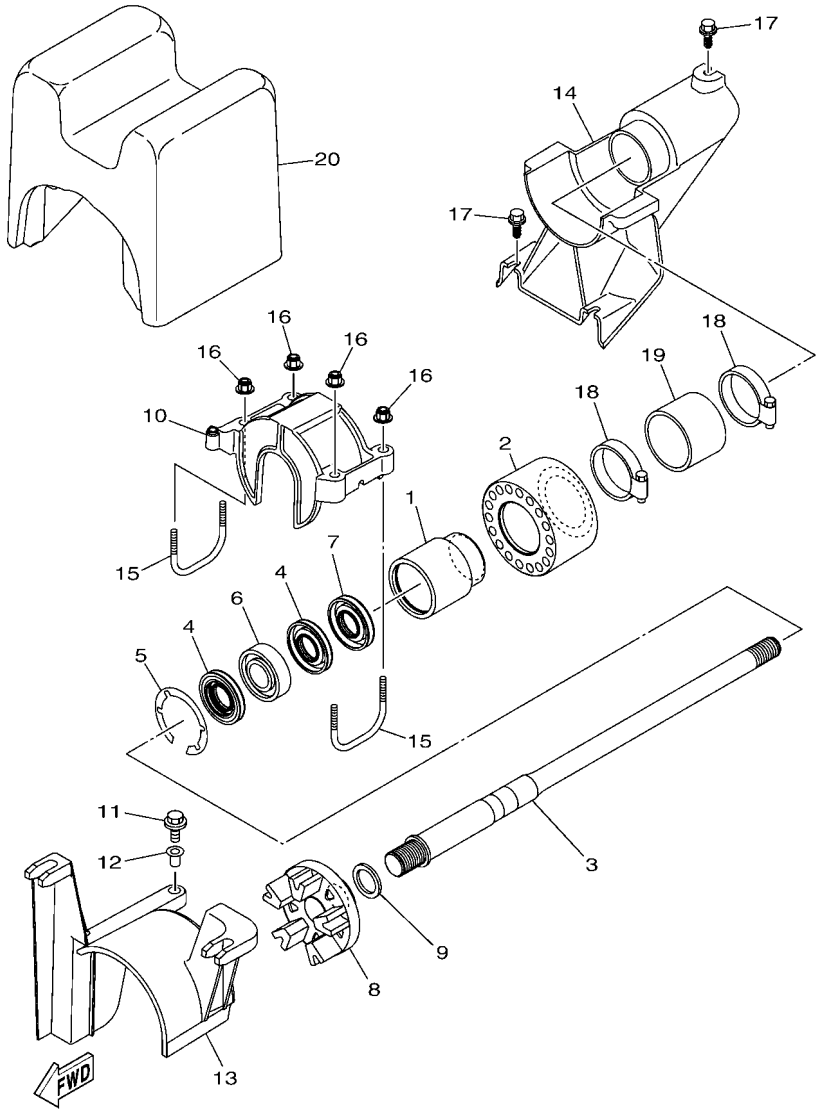

F3Y7100-T120

FIG. 12 JET UNIT 2

REF. NO.	PART NO.	DESCRIPTION	F3YM					REMARKS
1	6GA–G5332–00	HOUSING, BEARING	1					
2	6GA–G5235–00	DAMPER	1					
3	6GA–45511–00	SHAFT, DRIVE	1					
4	93101–25M55	OIL SEAL	2					
5	99009–52500	CIRCLIP	1					
6	93306–205XG	BEARING	1					
7	93101–25M56	OIL SEAL	1					
8	6GA–G5593–00	FLANGE, COUPLING 1	1					
9	90201–24800	WASHER, PLATE	1					
10	F3Y–U2155–01	CAP	1					
11	90119–06891	BOLT, WITH WASHER	1					
12	90387–06289	COLLAR	1					
13	6GA–R1381–00	COVER	1					
14	F3Y–U883E–00	JOINT, PIPE	1					
15	F3Y–U3746–00	BOLT, LOCK	2					
16	F2N–U142L–00	NUT, LOCK	4					
17	90109–06832	BOLT	3					
18	90601–155U4	BAND, HOSE 55	2					
19	F3Y–U883B–00	PIPE 1	1					
20	F3Y–U892D–00	FLOTATION, STERN RH	1					

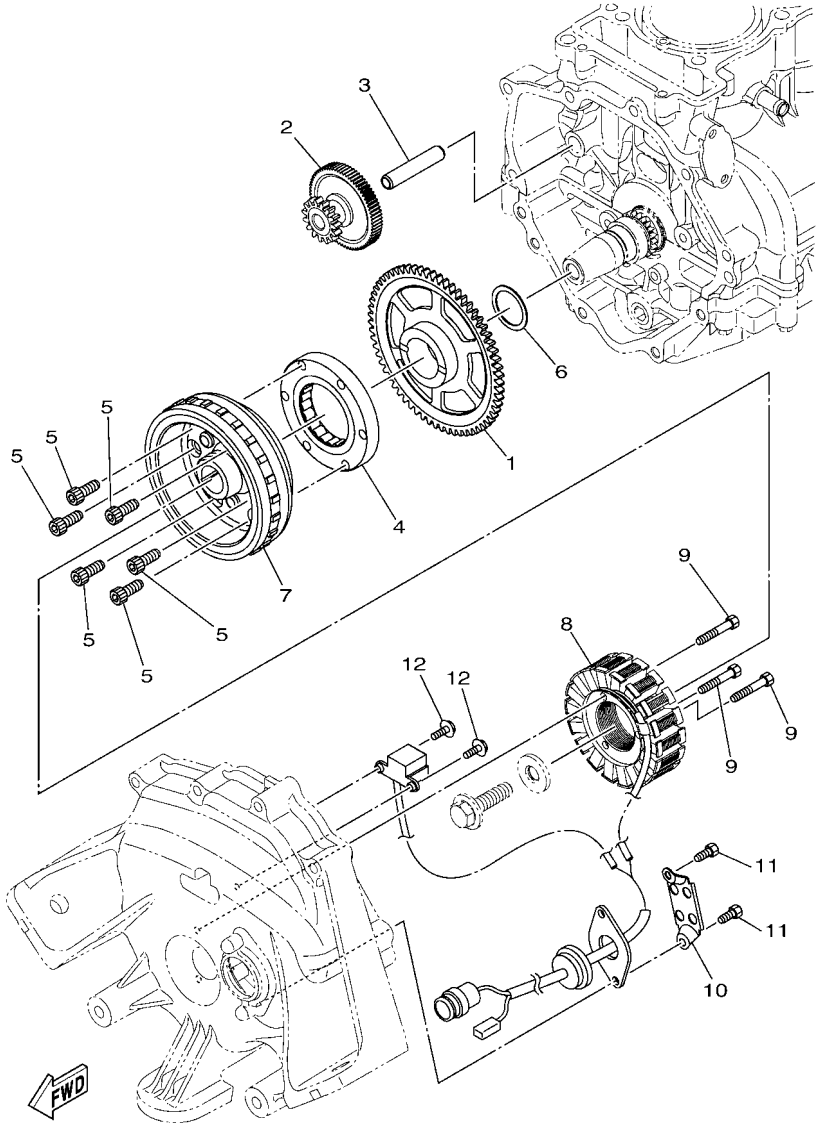

F4G1100-R140

FIG. 13 GENERATOR

REF. NO.	PART NO.	DESCRIPTION	F3YM					REMARKS
1	8FA–15515–00	GEAR 3	1					
2	2HC–15512–00	GEAR, IDLER 1	1					
3	8ES–15521–00	SHAFT 1	1					
4	6EY–15590–00	STARTER ONE-WAY ASSY	1					
5	90110–08212	BOLT, HEXAGON SOCKET HEAD	6					
6	90201–30013	WASHER, PLATE	1					
7	6EY–81450–00	ROTOR ASSY	1					
8	6EY–81410–00	STATOR ASSY	1					
9	91317–06035	BOLT,HEX.SOCKET HEAD	3					
10	60E–81328–00	CLAMP	1					
11	91317–06014	BOLT,HEX.SOCKET HEAD	2					
12	97513–05514	BOLT, WITH WASHER	2					

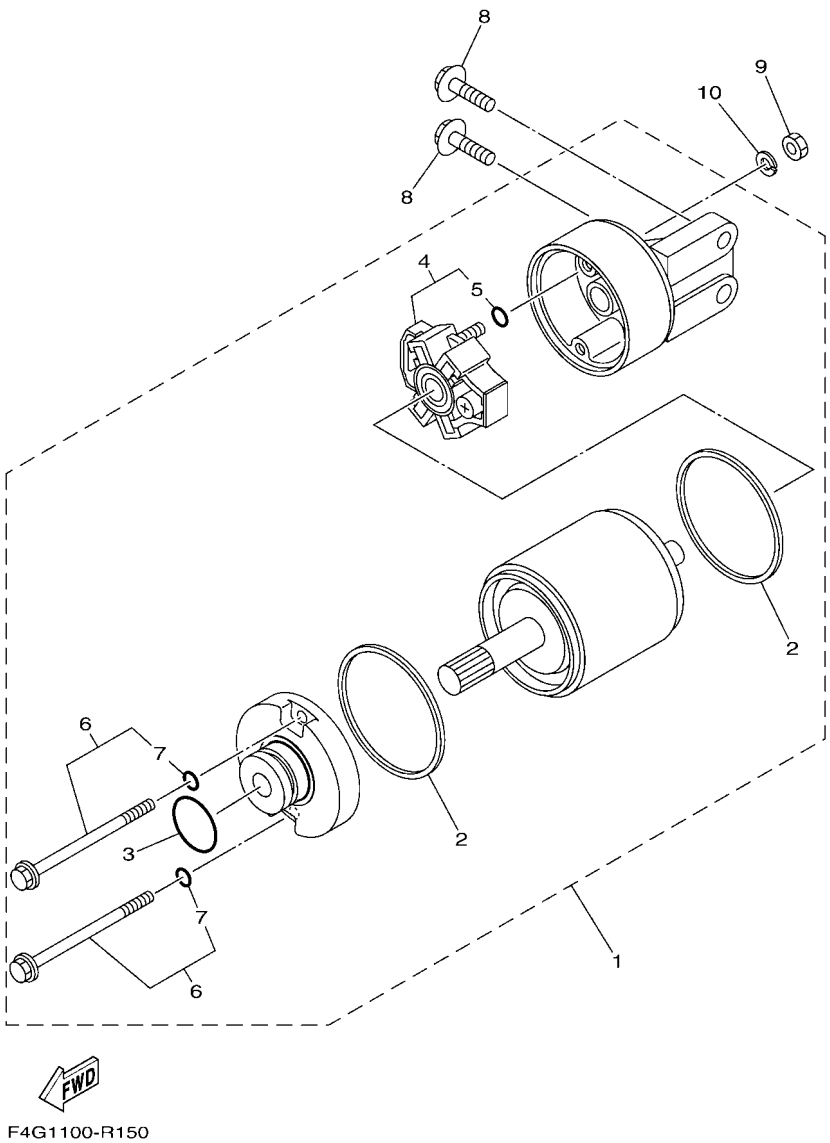

FIG. 14 STARTING MOTOR

REF. NO.	PART NO.	DESCRIPTION	F3YM					REMARKS
1	6EY–81800–00	STARTING MOTOR ASSY	1					
2	11H–81844–00	.GASKET	2					
3	1FK–81847–00	.O-RING	1					
4	6EY–81840–00	.BRUSH HOLDER ASSY	1					
5	3TB–81847–00	..O-RING	1					
6	6EY–81826–00	.BOLT	2					
7	3TB–81847–00	..O-RING	1					
8	97513–08530	BOLT, WITH WASHER	2					
9	95380–06700	NUT	1					
10	92990–06100	WASHER, SPRING	1					

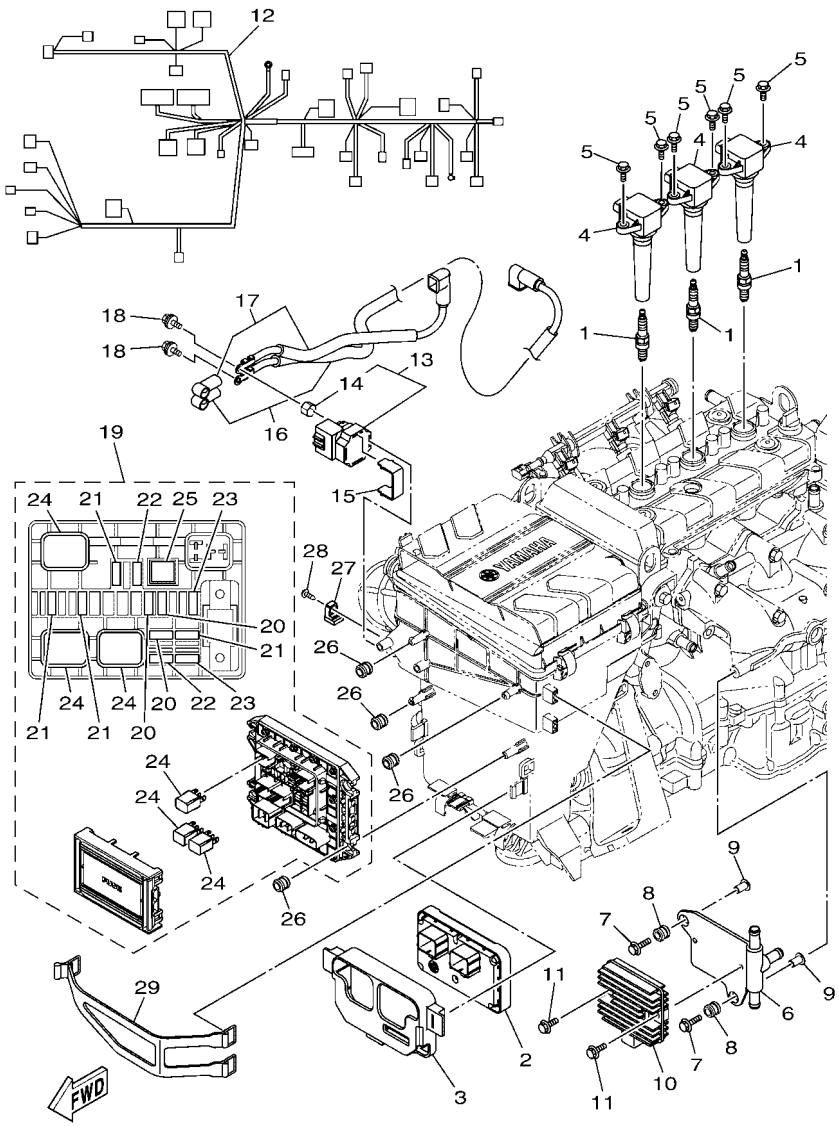

F3YH100-V160

FIG. 15 ELECTRICAL 1

REF. NO.	PART NO.	DESCRIPTION	F3YM					REMARKS
1	94702–00409	PLUG, SPARK (NGK CR9EB)	3					
2	6GA–8591A–31	ENGINE CONTROL UNIT ASSY	1					
3	6EY–8591S–00	GROMMET, ECU	1					
4	6EX–82310–00	IGNITION COIL ASSY	3					
5	95880–06016	BOLT, FLANGE	6					
6	6EY–81975–00	PLATE, RECTIFIER FITTING	1					
7	90119–06311	BOLT, WITH WASHER	2					
8	6A0–82317–00	DAMPER, IGNITION COIL	2					
9	90387–06119	COLLAR	2					
10	6D3–81960–01	RECTIFIER & REGULATOR ASSY	1					
11	95814–06020	BOLT, FLANGE	2					
12	6GA–8259L–30	WIRE HARNESS ASSY 1	1					
13	6EY–81940–09	STARTER RELAY ASSY	1					
14	6EY–82355–00	.GROMMET	1					
15	6EY–81953–00	STAY, RELAY	1					
16	6GA–82115–01	WIRE, PLUS LEAD	1					
17	6EY–82117–00	WIRE, LEAD	1					
18	97E95–06612	BOLT, HEXAGON W/W DEEP RECESS	2					
19	6EX–82170–11	FUSE BOX ASSY	1					
20	67F–82151–30	.FUSE (3A)	3					
21	67F–82151–40	.FUSE (10A)	4					
22	67F–82151–00	.FUSE (20A)	2					
23	67F–82151–10	.FUSE (30A)	2					
24	6EX–8195A–00	.RELAY ASSY	3					
25	6EX–2812A–00	.PULLER, FUSE	1					
26	6A0–82317–00	DAMPER, IGNITION COIL	4					
27	6AA–85542–00	BRACKET	1					

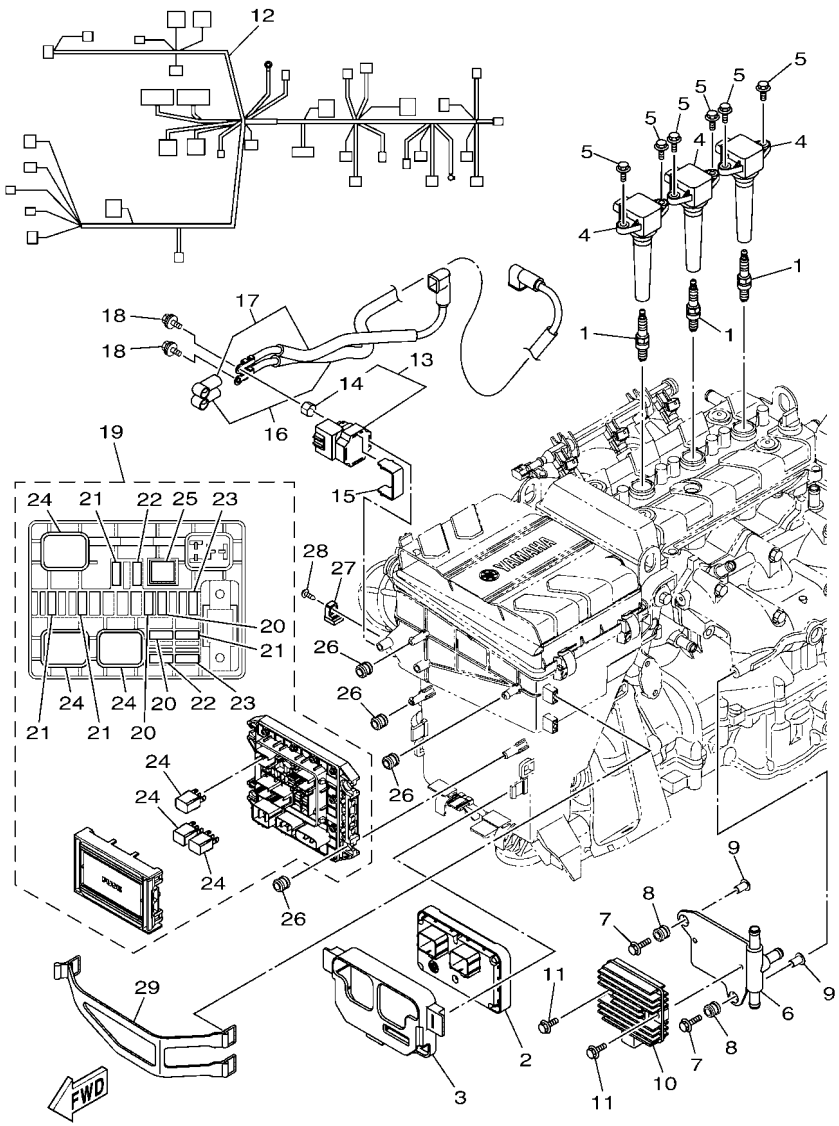

F3YH100-V160

FIG. 15 ELECTRICAL 1

REF. NO.	PART NO.	DESCRIPTION	F3YM					REMARKS
28	90160–05003	SCREW, ROUND TAPPING	1					
29	6EY–82593–00	BAND	1					

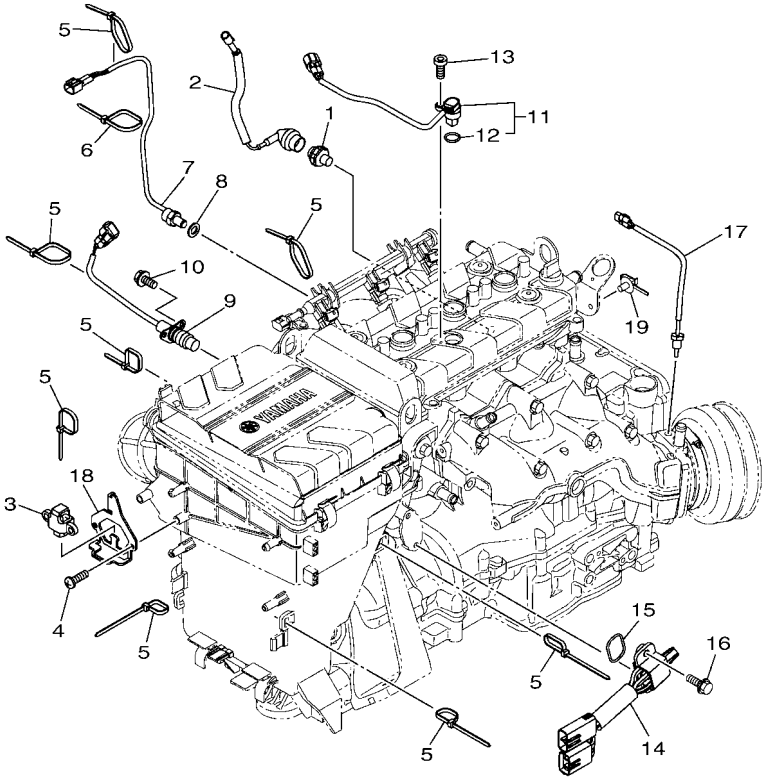

F3YD100-U170

FIG. 16 ELECTRICAL 2

REF. NO.	PART NO.	DESCRIPTION	F3YM					REMARKS
1	68V–82504–00	OIL PRESSURE SWITCH ASSY	1					
2	60E–81315–00	LEAD WIRE ASSY	1					
3	6ET–82576–00	SENSOR, LEAN ANGLE	1					
4	97780–60520	SCREW, TAPPING	2					
5	90464–35132	CLAMP	8					
6	90465–13M39	CLAMP	1					
7	61A–85790–00	THERMOSENSOR ASSY	1					
8	92990–10600	WASHER, PLATE	1					
9	6CR–82560–00	THERMO SWITCH ASSY	1					
10	97E95–06520	BOLT, HEXAGON W/W DEEP RECESS	2					
11	2S3–85896–02	SENSOR, CAM POSITION	1					
12	4D9–81168–00	.O-RING	1					
13	91380–06016	BOLT	1					
14	6CS–8273J–10	EARTH PLATE COMP.	1					
15	93210–32172	O-RING	1					
16	90119–06MA3	BOLT, WITH WASHER	2					
17	6DE–85790–00	THERMOSENSOR ASSY	1					
18	6EY–83618–10	PLATE	1					
19	90464–20005	CLAMP	1					

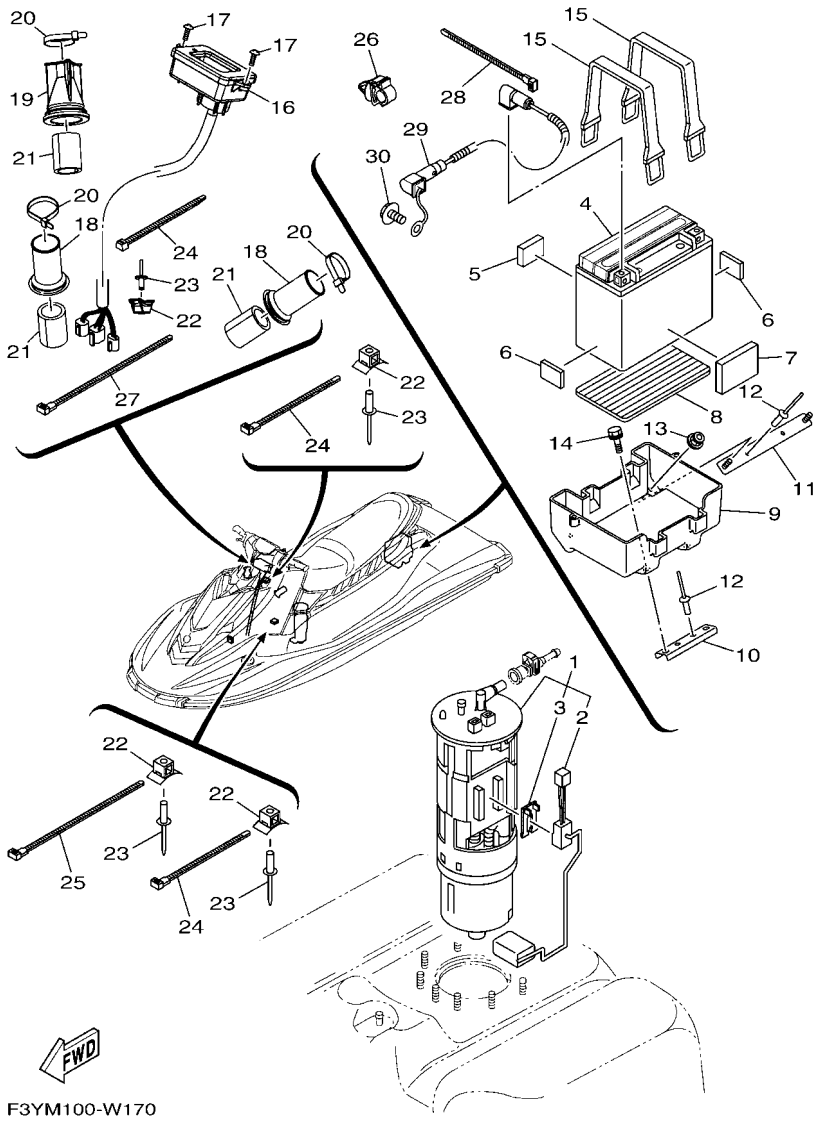

FIG. 17 ELECTRICAL 3

REF. NO.	PART NO.	DESCRIPTION	F3YM					REMARKS
1	6S5–13907–04	FUEL PUMP COMP.	1					
2	6S5–682E0–00	.FUEL SENDER ASSY	1					
3	60E–82556–00	.DAMPER, STOPPER	1					
4	5FU–H2100–20	BATTERY ASSY (YUASA YTX20L-BS)	1					
5	F2C–U1743–00	PACKING	1					
6	EU0–U8221–30	PAD, BATTERY 2	2					
7	F1W–U759C–01	MAT 2	1					
8	F1S–U8221–00	PAD, BATTERY	1					
9	F2S–U8211–00	CASE, BATTERY	1					
10	F2S–U8592–00	PLATE, BASE 2	1					
11	F2S–U8593–00	PLATE, BASE 3	1					
12	90267–489U1	RIVET,BLIND	4					
13	F2N–U142L–00	NUT, LOCK	2					
14	90119–06832	BOLT, WITH WASHER	2					
15	F4P–U821D–00	BAND, BATTERY 1	2					
16	F4L–U820A–00	METER ASSY	1					
17	F2S–U7823–01	SCREW	2					
18	GU2–6822E–01	GROMMET	2					
19	F3J–U822E–00	GROMMET	1					
20	90464–32801	CLAMP	3					
21	GJ1–U7578–21	PACKING, HOSE 2	3					
22	F1W–U828M–00	BASE, CLAMP	5					
23	90267–48806	RIVET, BLIND	5					
24	90464–32801	CLAMP	3					
25	90601–200U2	BAND	2					
26	90464–10008	CLAMP	1					
27	90601–200U2	BAND	1					

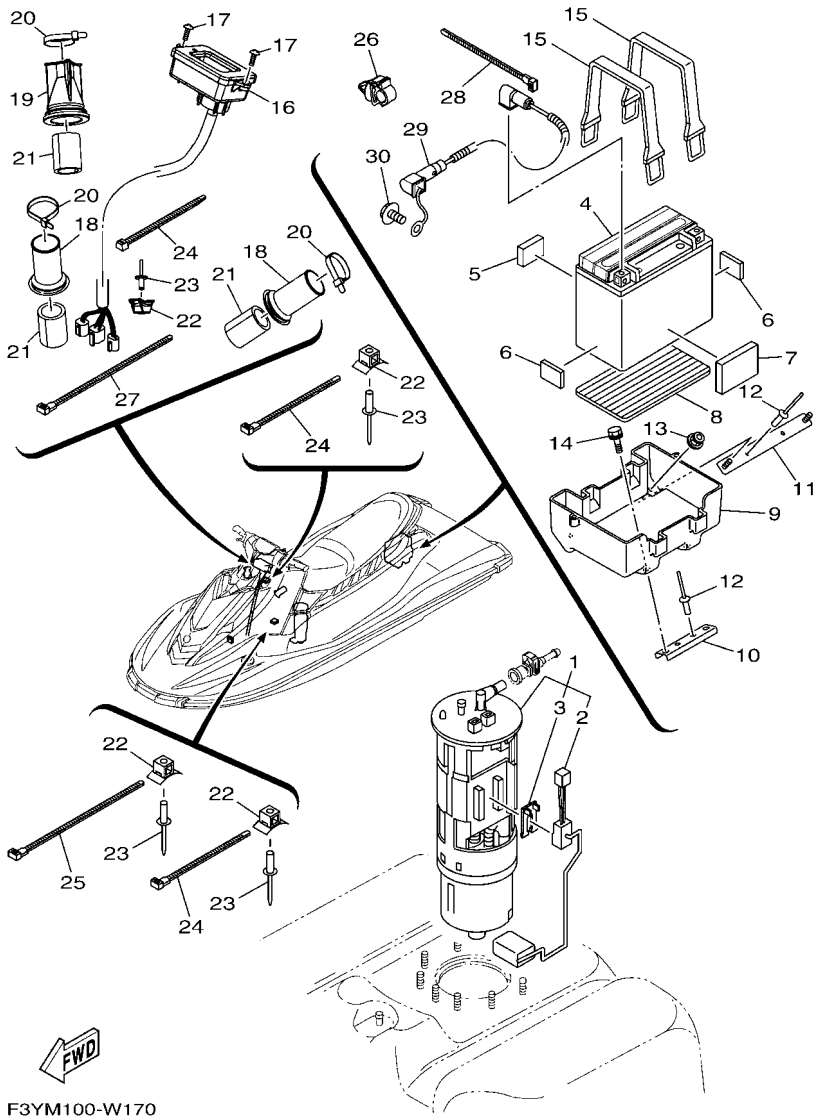

FIG. 17 ELECTRICAL 3

REF. NO.	PART NO.	DESCRIPTION	F3YM					REMARKS
28	90464–32801	CLAMP	1					
29	6GA–82116–00	WIRE, MINUS LEAD	1					
30	97513–08514	BOLT, WITH WASHER	1					

FIG. 18 ENGINE MOUNT

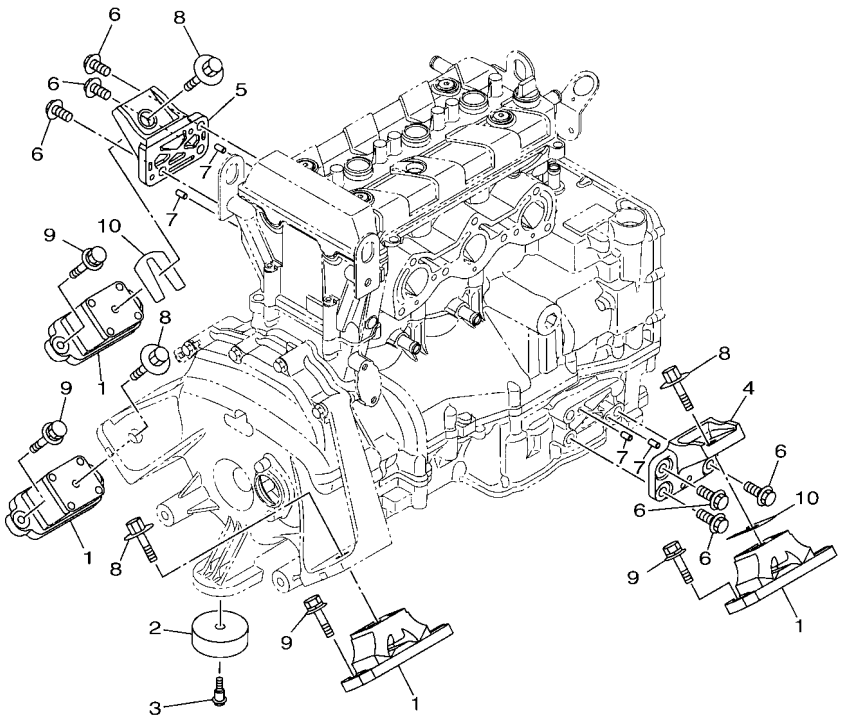

F3YK100-W190

REF. NO.	PART NO.	DESCRIPTION	F3YM					REMARKS
1	6GA–44517–00	MOUNT RUBBER	4					
2	6EY–44574–00	STOPPER, LOWER MOUNT RUBBER	1					
3	90109–06M92	BOLT	1					
4	6EY–41661–10	BRACKET 1	1					
5	6EY–41662–00	BRACKET 2	1					
6	90105–10M49	BOLT, FLANGE	6					
7	93606–12019	PIN, DOWEL	4					
8	90119–08859	BOLT, WITH WASHER	4					
9	90119–08823	BOLT, WITH WASHER	8					
10	EU0–U7354–00–01	SHIM (T=0.1)	4					UN
	EU0–U7354–00–03	SHIM (T=0.3)	4					UN
	EU0–U7354–00–05	SHIM (T=0.5)	4					UN
	EU0–U7354–00–10	SHIM (T=1.0)	4					UN
	EU0–U7354–00–20	SHIM (T=2.0)	4					UN

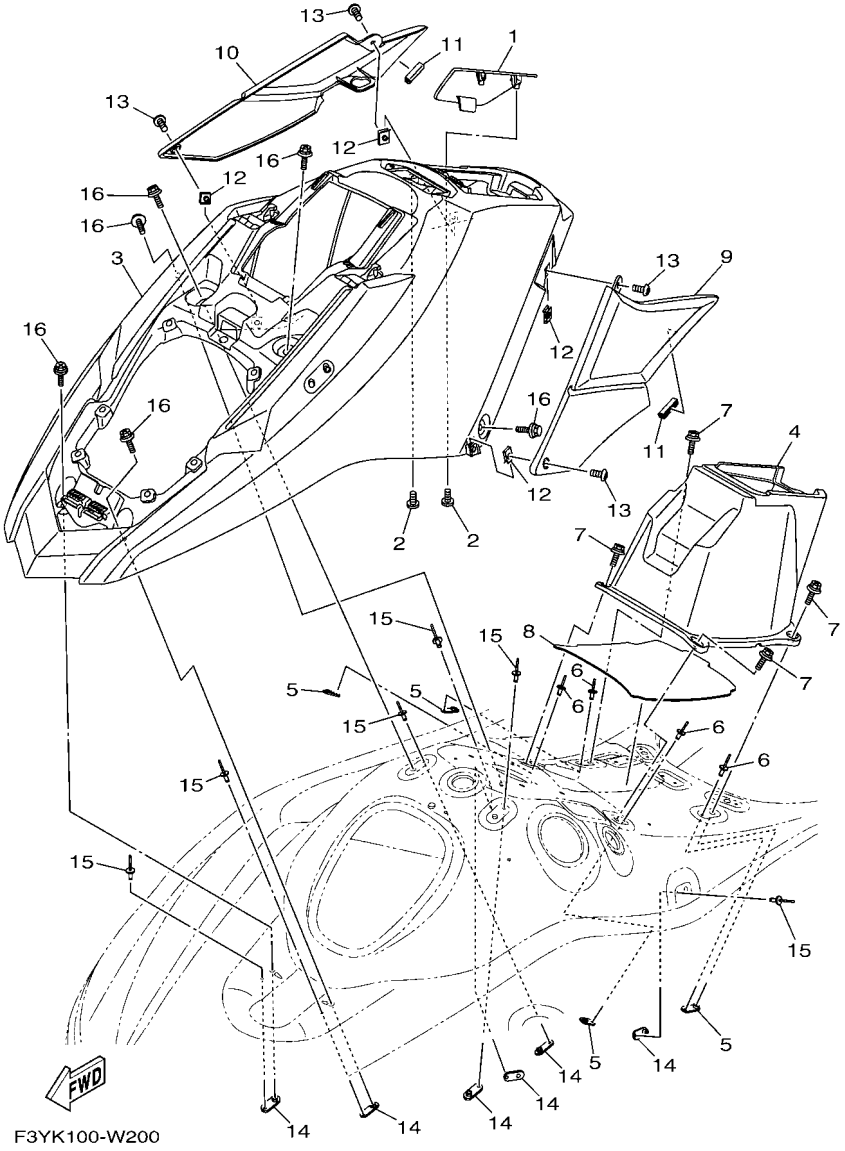

FIG. 19 ENGINE HATCH 1

REF. NO.	PART NO.	DESCRIPTION	F3YM					REMARKS
1	F3Y–U2723–10	SEAL	1					
2	F2S–U13C1–00	SCREW	2					
3	F3Y–U516N–10	COVER, ENGINE HATCH	1					
4	F3Y–U516P–00	BOX GLOVE	1					
5	F2X–U5175–00	PLATE, FIX	4					
6	90267–489U1	RIVET,BLIND	4					
7	90119–06882	BOLT, WITH WASHER	4					
8	F3Y–U759B–00	MAT 1	1					
9	F3Y–U353B–A0	PAD, KNEE	1					
10	F3Y–U353B–B0	PAD, KNEE	1					
11	F3Y–U828H–30	TRIM, 1	2					
12	90183–06902	NUT, SPRING	4					
13	90111–06873	BOLT,HEX. SOCKET BUTTON	4					
14	F2X–U5175–00	PLATE, FIX	6					
15	90267–489U1	RIVET,BLIND	6					
16	90119–06820	BOLT, WITH WASHER	6					

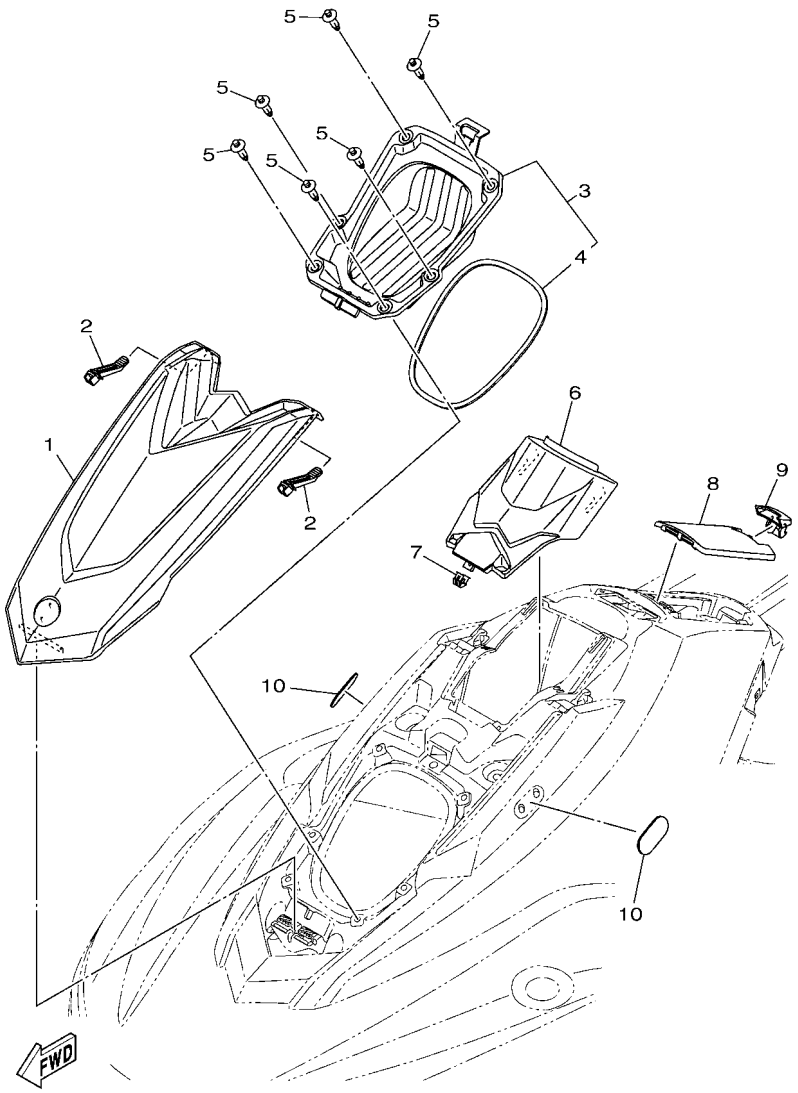

F3Y5100-S200

FIG. 20 ENGINE HATCH 2

REF. NO.	PART NO.	DESCRIPTION	F3YM					REMARKS
1	F3Y–U517B–50	LID, ENGINE ROOM	1					
2	F3Y–U264L–00	LOCK 1	2					
3	F3Y–U475A–00	BOWLOCKER ASSY	1					
4	F3Y–U2663–00	.PACKING 1	1					
5	90269–08801	RIVET	6					
6	F3Y–U513M–00	COVER, FRONT	1					
7	F3Y–U153K–00	CLIP	1					
8	F3Y–U517H–00	LID HATCH	1					
9	F3Y–U2875–00	LOCK	1					
10	F3Y–U2724–10	PLUG 2	2					

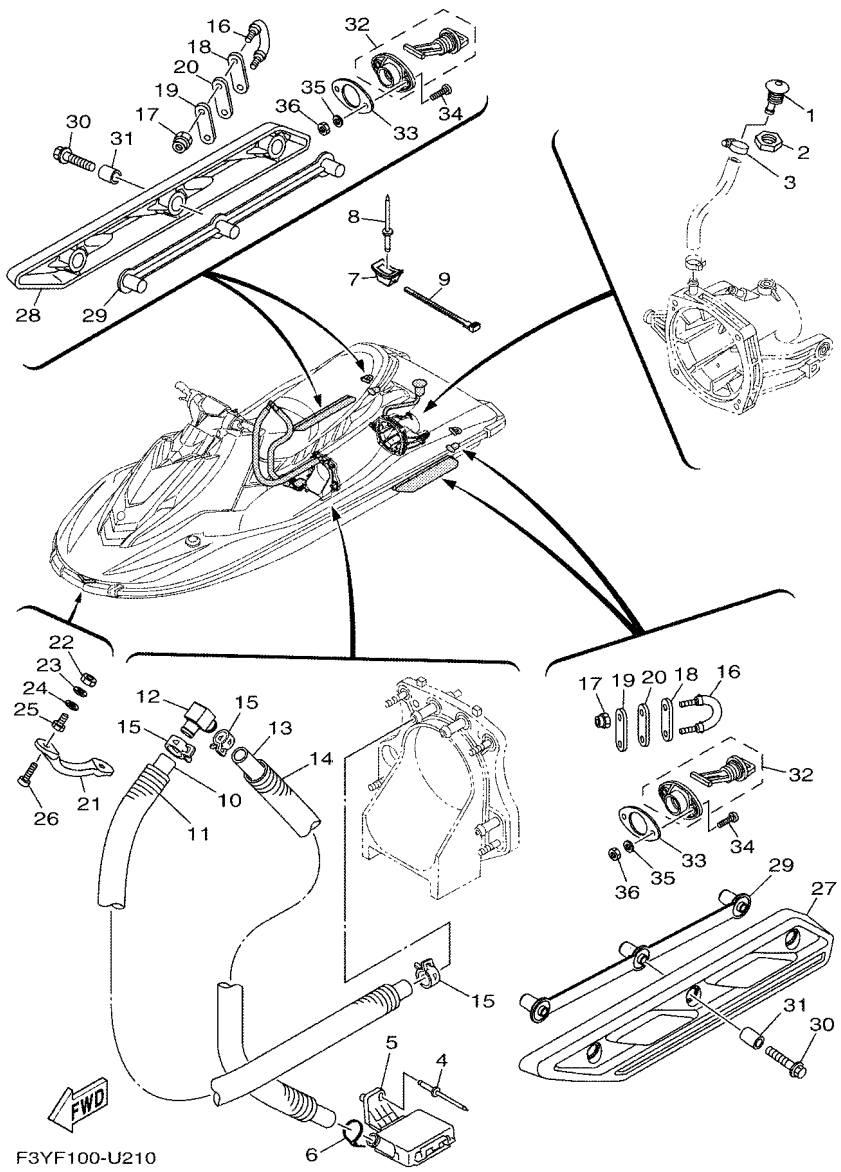

FIG. 21 HULL & DECK

REF. NO.	PART NO.	DESCRIPTION	F3YM					REMARKS
1	F1W–U269B–00	SPOUT	1					
2	EU0–61652–00	NUT	1					
3	90601–118UF	BAND, HOSE 18	1					
4	F1B–U761D–02	STRAINER, BILGE	1					
5	90267–489U8	RIVET, BLIND	1					
6	90465–11829	CLAMP	1					
7	F1W–U828M–00	BASE, CLAMP	1					
8	90267–48806	RIVET, BLIND	1					
9	90601–200U2	BAND	1					
10	6GA–U771G–00	HOSE 2	1					
11	6GA–U773E–00	TUBE,2	1					
12	68N–5112T–00	JOINT, HOSE	1					
13	6GA–U784C–00	HOSE	1					
14	6GA–U773D–00	TUBE	1					
15	90467–180A5	CLIP	3					
16	F2N–U1628–02	STERN EYE	2					
17	9572R–08300	NUT, FLANGE	4					
18	GP7–U4953–10	PLATE A	2					
19	GP7–U4953–10	PLATE A	2					
20	F1B–U1653–02	PACKING	2					
21	F1K–61624–00	BOW EYE 1	1					
22	99780–12600	NUT.HEX.(COARS)	2					
23	92990–12200	WASHER, PLAIN	2					
24	F0X–61637–00	WASHER	2					
25	F0X–61652–01	NUT	2					
26	90110–06040	BOLT, HEXAGON SOCKET HEAD	2					
27	F3Y–U883N–00	STABILIZER LH	1					

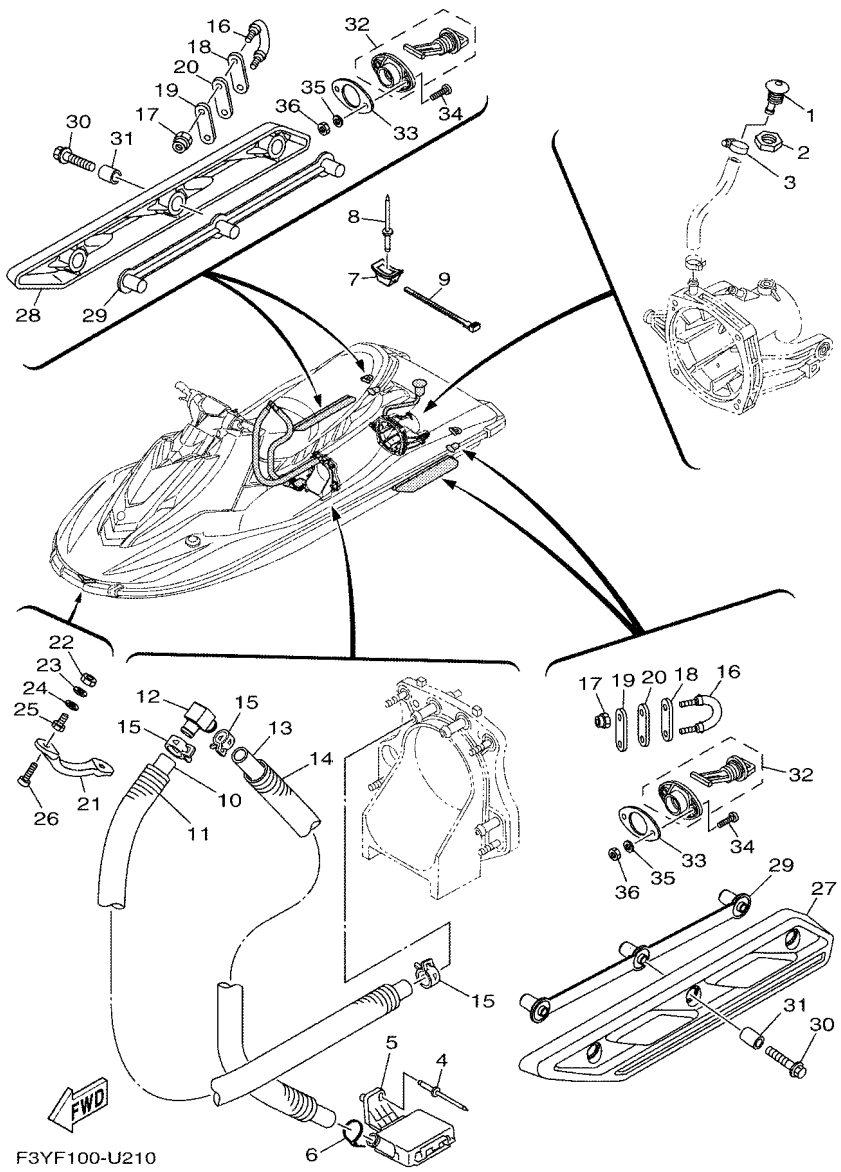

FIG. 21 HULL & DECK

REF. NO.	PART NO.	DESCRIPTION	F3YM					REMARKS
28	F3Y–U883P–00	STABILIZER RH	1					
29	F3Y–U883T–00	BRACKET,STABILIZER	2					
30	90105–08860	BOLT, FLANGE	6					
31	F2N–U8169–00	SPACER	6					
32	F1S–U2280–02	DRAIN PLUG ASSY.	2					
33	F1S–U2285–00	PACKING, DRAIN	2					
34	9788R–05025	SCREW, PAN HEAD	4					
35	9299R–05200	WASHER	4					
36	9572R–05300	NUT, FLANGE	4					

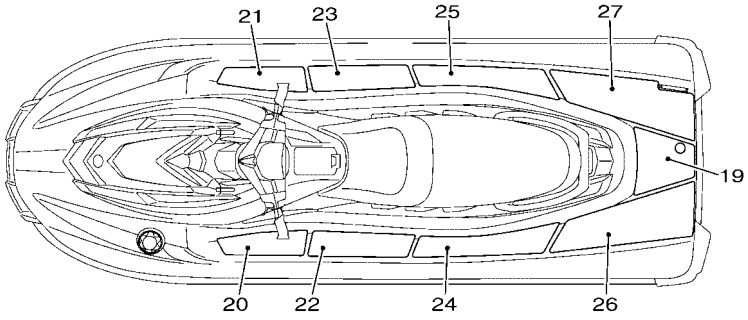

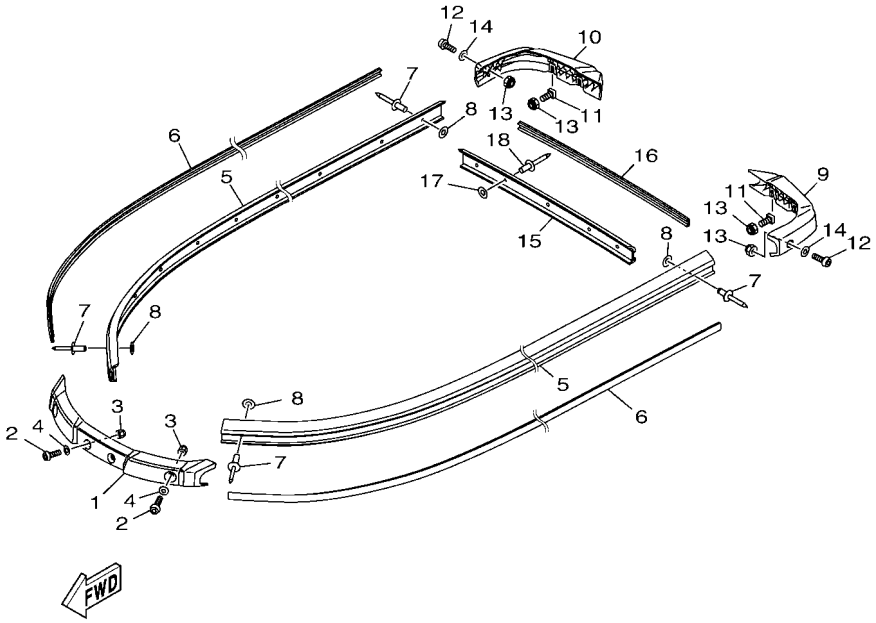

F3Y5100-S220

FIG. 22 GUNWALE & MAT

REF. NO.	PART NO.	DESCRIPTION	F3YM					REMARKS
1	F3Y–U2511–00	GUNWALE, BOW	1					BLACK
2	90111–06803	BOLT,HEX. SOCKET BUTTON	4					
3	F2N–U142L–00	NUT, LOCK	4					
4	F3Y–U1174–00	WASHER	4					
5	F3Y–U2512–03	GUNWALE, SIDE	2					BLACK
6	F3Y–U2519–41	INNER,GUNWALE	2					WHITE
7	90267–489U8	RIVET, BLIND	30					
8	9299R–05200	WASHER	30					
9	F3Y–U251D–00	GUNWALE, STERN 1	1					BLACK
10	F3Y–U251E–00	GUNWALE, STERN 2	1					BLACK
11	F1W–U491K–00	BOLT, SPECIAL	4					
12	90111–06803	BOLT,HEX. SOCKET BUTTON	2					
13	F2N–U142L–00	NUT, LOCK	6					
14	F3Y–U1174–00	WASHER	2					
15	F3Y–U252C–00	COVER, GUNWALE 1	1					BLACK
16	F3Y–U252D–50	COVER, GUNWALE 2	1					WHITE
17	9299R–05200	WASHER	5					
18	90267–489U8	RIVET, BLIND	5					
19	F3Y–U3581–10	MAT, UPPER	1					BLACK/BLUE
20	F3Y–U351H–10	MAT, STEP 1	1					BLACK/BLUE
21	F3Y–U351J–10	MAT, STEP 2	1					BLACK/BLUE
22	F3Y–U351K–10	MAT, STEP 3	1					BLACK/BLUE
23	F3Y–U351M–10	MAT, STEP 4	1					BLACK/BLUE
24	F3Y–U351N–10	MAT, STEP 5	1					BLACK/BLUE
25	F3Y–U351P–10	MAT, STEP 6	1					BLACK/BLUE
26	F3Y–U351R–10	MAT, STEP 7	1					BLACK/BLUE
27	F3Y–U351S–10	MAT, STEP 8	1					BLACK/BLUE

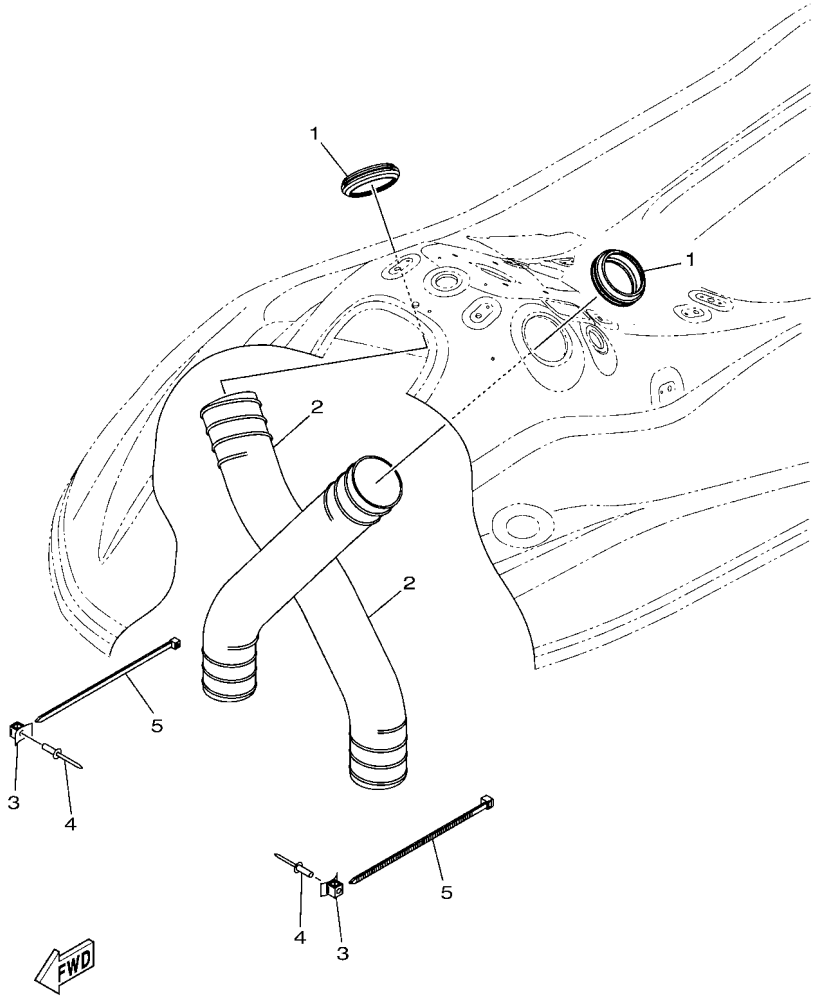

F3Y1100-S240

FIG. 23 VENTILATION

REF. NO.	PART NO.	DESCRIPTION	F3YM					REMARKS
1	F3Y–U2127–00	BASE, AIR INTAKE	2					
2	F3Y–U213G–01	HOSE, VENTILATOR 2	2					
3	F1W–U828M–00	BASE, CLAMP	2					
4	90267–48806	RIVET, BLIND	2					
5	90464–99804	CLAMP	2					

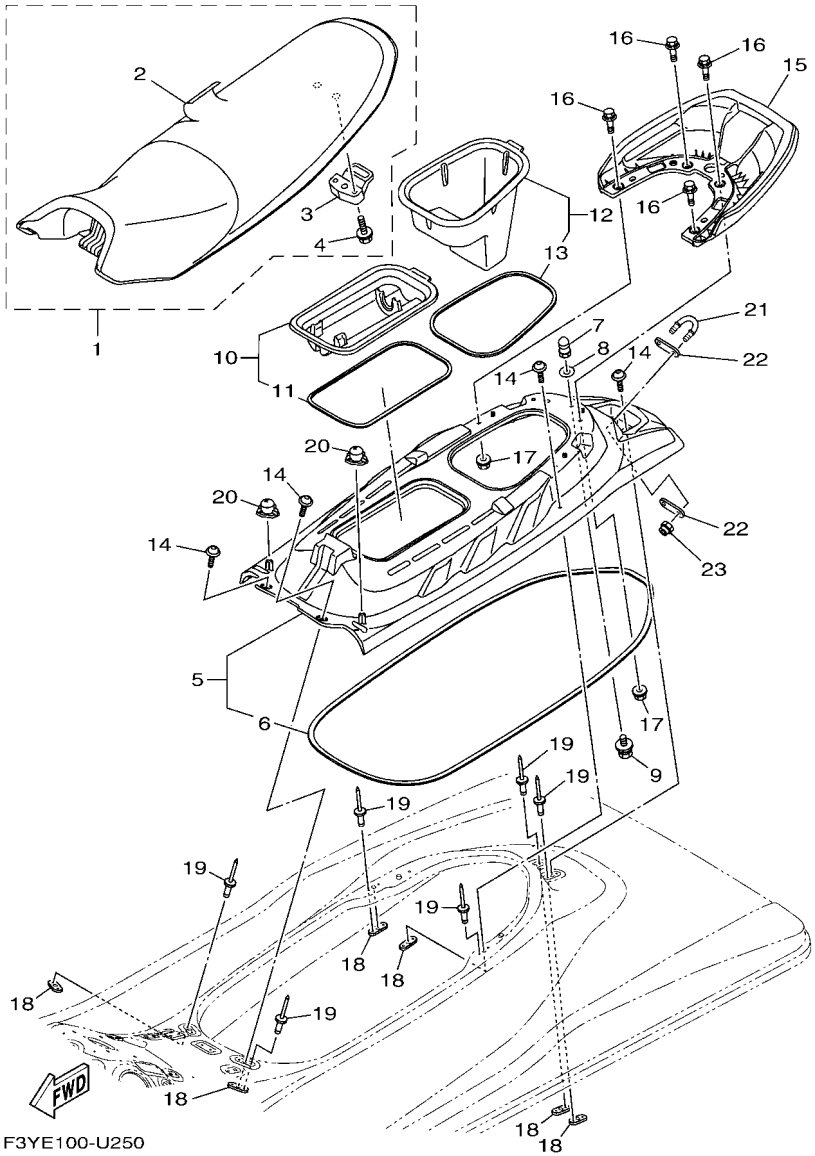

FIG. 24 SEAT & UNDER LOCKER

REF. NO.	PART NO.	DESCRIPTION	F3YM					REMARKS
1	F3Y–U371A–J0	DOUBLE SEAT ASSY	1					
2	F3Y–U371B–J0	.COVER, SEAT 1	1					
3	F1B–U3850–02	.SEAT LOCK ASSY	1					
4	90119–069UP	.BOLT, WITH WASHER	2					
5	F3Y–U374A–01	BASE SEAT	1					
6	F3Y–U266B–01	.PACKING 3	1					
7	F1K–U3774–00	PIN	1					
8	90201–109U6	WASHER, PLATE	1					
9	90119–10804	BOLT, WITH WASHER	1					
10	F3Y–U592A–10	CASE ASSY 2	1					
11	F3Y–U266D–10	.PACKING 5	1					
12	F3Y–U591A–10	CASE ASSY 1	1					
13	F3Y–U266E–10	.PACKING,6	1					
14	F3Y–U491K–02	BOLT, SPECIAL	6					
15	F3Y–U271B–00	GRIP, HAND	1					
16	90119–08829	BOLT, WITH WASHER	4					
17	F3Y–U142L–00	NUT, LOCK	4					
18	F2C–U826C–00	BRACKET	6					
19	90267–489U1	RIVET,BLIND	12					
20	F3Y–U1338–00	GROMMET	2					
21	F2N–U1628–02	STERN EYE	1					
22	GP7–U4953–10	PLATE A	2					
23	9572R–08300	NUT, FLANGE	2					

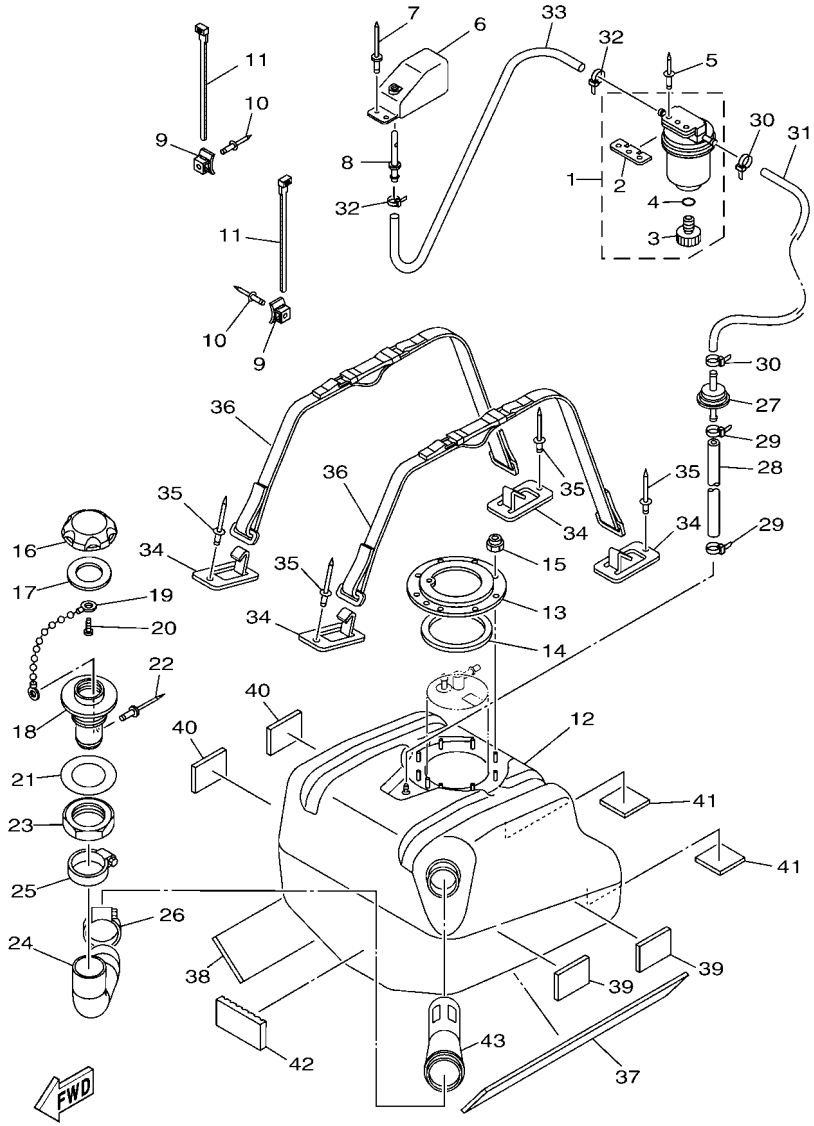

F3YD100-U260

FIG. 25 FUEL TANK

REF. NO.	PART NO.	DESCRIPTION	F3YM					REMARKS
1	F2F–6214A–00	FILTER, VENT ASSY	1					
2	EW2–62142–00	.PLATE, FILTER	1					
3	70R–24543–00	.PLUG, DRAIN	1					
4	70R–24489–00	.O-RING	1					
5	90267–489U2	RIVET, BLIND	2					
6	GP7–62159–02	SOCKET, VENTILATION	1					
7	90267–489U6	RIVET, BLIND	2					
8	F1G–62149–00	PIPE, VENTILATION	1					
9	F1W–U828M–00	BASE, CLAMP	2					
10	90267–48806	RIVET, BLIND	2					
11	90464–32801	CLAMP	2					
12	F3Y–U7711–02	TANK, FUEL	1					
13	F1B–U7773–00	RING	1					
14	F1B–67747–00	PACKING, SEAL	1					
15	9572R–06300	NUT, NYLON	9					
16	F2N–U7831–10	CAP, FUEL FILLER	1					BLACK
17	GP7–U7832–01	PACKING	1					
18	GP7–U7833–11	SOCKET	1					BLACK
19	GP7–U7835–00	CHAIN BALL	1					
20	90169–049U1	TAPPING SCREW	1					
21	GP7–U7834–00	PACKING FUEL FILLER	1					
22	90267–329UR	RIVET, BLIND	1					
23	GP7–U783F–00	NUT, FUEL FILLER	1					
24	F3Y–U7844–00	HOSE	1					
25	90601–155U4	BAND, HOSE 55	1					
26	90601–155U4	BAND, HOSE 55	1					
27	F3Y–U7767–00	CHECK VALVE	1					

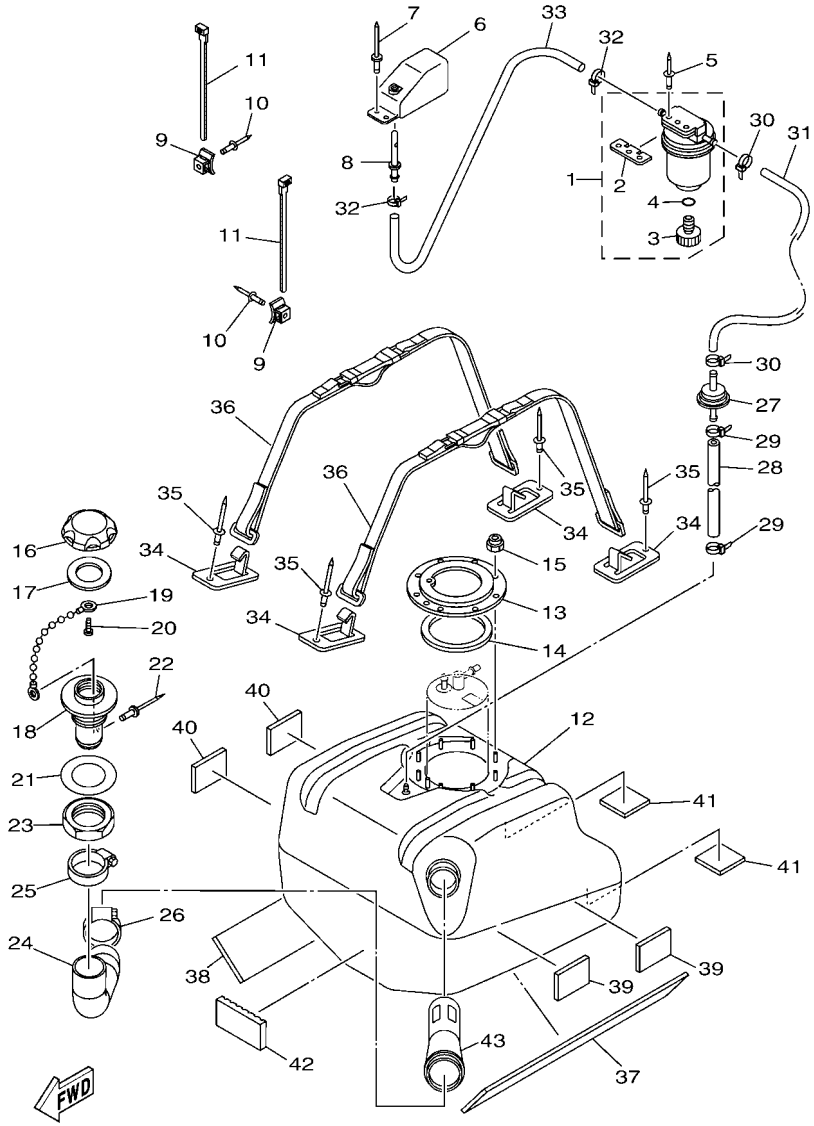

F3YD100-U260

FIG. 25 FUEL TANK

REF. NO.	PART NO.	DESCRIPTION	F3YM					REMARKS
28	GP7–U785H–00	HOSE, AIR VENT 3	1					
29	90465–11829	CLAMP	2					
30	90465–11829	CLAMP	2					
31	F3Y–U7856–00	HOSE, AIR VENT 3	1					
32	90465–11829	CLAMP	2					
33	GP7–U785G–10	HOSE, AIR VENT	1					
34	F1K–U5772–04	HOOK A	4					
35	90267–489U1	RIVET,BLIND	4					
36	F3Y–67743–01	BELT, TANK 1	2					
37	F2S–U759B–00	MAT 1	1					
38	F2S–U759B–00	MAT 1	1					
39	F1W–U759C–01	MAT 2	2					
40	F1W–U759C–01	MAT 2	2					
41	F1K–U759C–00	MAT 2	2					
42	F1S–U8221–00	PAD, BATTERY	1					
43	F4L–U773D–00	TUBE	1					

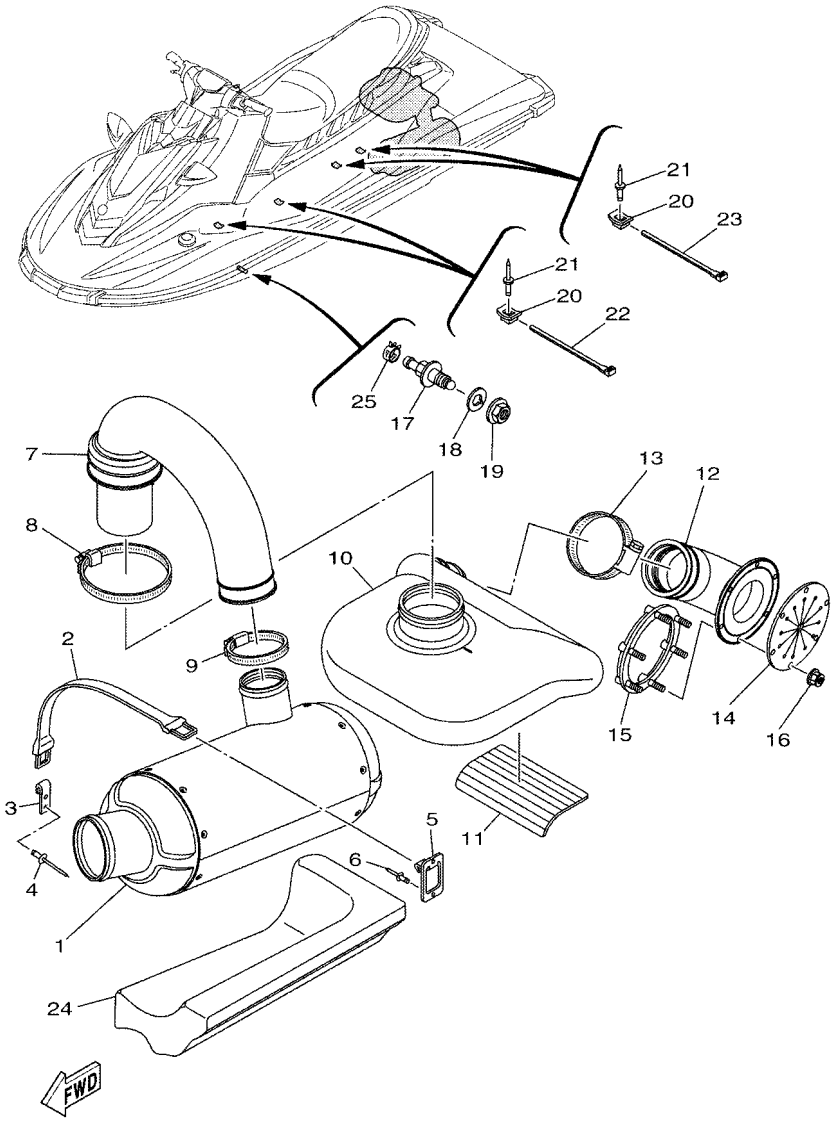

F3YD100-U270

FIG. 26 EXHAUST 3

REF. NO.	PART NO.	DESCRIPTION	F3YM					REMARKS
1	F3Y–U7550–01	WATER LOCK COMP.	1					
2	EU0–U821D–00	BAND,BATTERY 1	1					
3	GA7–65772–00	HOOK A	1					
4	90267–489U1	RIVET,BLIND	2					
5	F1K–U5772–04	HOOK A	1					
6	90267–489U1	RIVET,BLIND	1					
7	F3Y–U7555–00	HOSE, EXHAUST	1					
8	90601–179U8	BAND, HOSE 79	1					
9	90450–99804	HOSE CLAMP ASSY	1					
10	F3Y–U4261–00	TANK, WATER	1					
11	F1S–U8221–00	PAD, BATTERY	1					
12	F3Y–U758D–00	HOSE,EXHAUST 3	1					
13	90601–179U8	BAND, HOSE 79	1					
14	F1B–U751G–00	VALVE, EXHAUST	1					
15	F1S–U757B–01	PLATE	1					
16	F2N–U142L–00	NUT, LOCK	6					
17	F2C–U753B–01	PILOT, WATER	1					
18	F2C–U7564–00	GASKET	1					
19	F2C–U2733–00	NUT	1					
20	F1W–U828M–00	BASE, CLAMP	4					
21	90267–48806	RIVET, BLIND	4					
22	90464–32801	CLAMP	2					
23	90601–200U2	BAND	2					
24	F3Y–U892F–00	FLOATATION, BASE 1	1					
25	90467–150A5	CLIP	1					

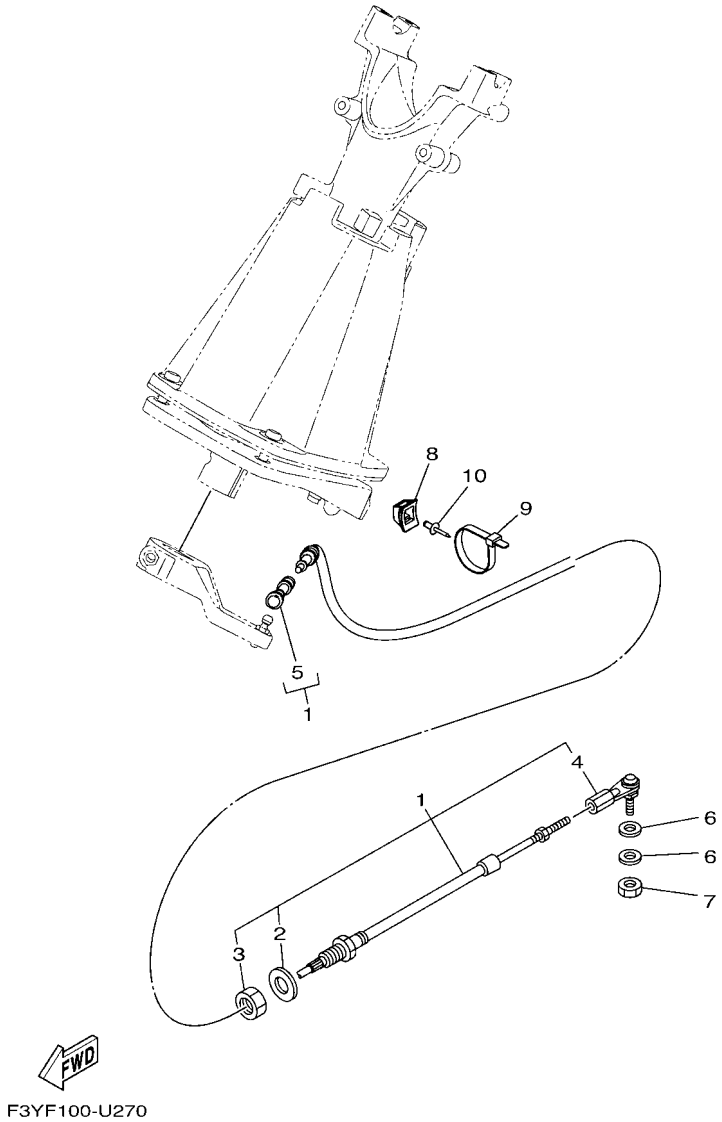

FIG. 27 CONTROL CABLE

REF. NO.	PART NO.	DESCRIPTION	F3YM					REMARKS
1	F3Y–61481–02	CABLE, STEERING	1					
2	F1B–61438–00	.PACKING C	1					
3	F1B–6151S–00	.NUT	1					
4	F1B–61461–02	.STUD, JOINT BALL	1					
5	F2N–61460–00	.BALL JOINT ASSY	1					
6	90201–06906	WASHER, PLATE	2					
7	9538R–06700	NUT	1					
8	F1W–U828M–00	BASE, CLAMP	1					
9	90464–32801	CLAMP	1					
10	90267–48806	RIVET, BLIND	1					

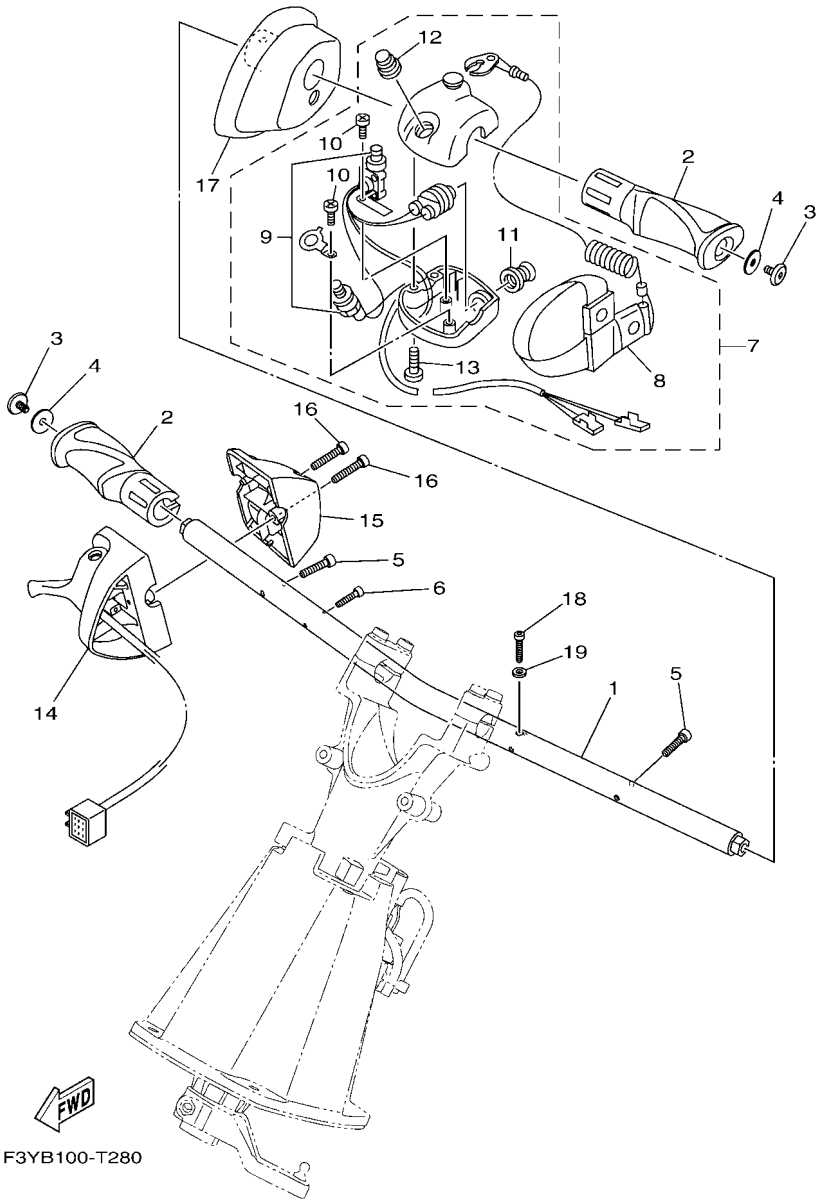

FIG. 28 STEERING 1

REF. NO.	PART NO.	DESCRIPTION	F3YM					REMARKS
1	F3Y–U1552–00	HANDLE	1					
2	F2S–U155D–03	GRIP, HANDLE	2					
3	90110–06382	BOLT, HEXAGON SOCKET HEAD	2					
4	90201–068G0	WASHER, PLATE	2					
5	F2S–U1516–00	BOLT	2					
6	91380–04030	BOLT	1					
7	F3Y–68310–00	SWITCH BOX ASSY	1					
8	EW2–68348–00	.LANYARD, STOP SWITCH	1					
9	FK7–68311–02	.SWITCH SUB ASSY	1					
10	97880–03008	.SCREW, PAN HEAD	2					
11	FK7–68312–02	.STOP BUTTON COMP	1					
12	FK7–68313–02	.START BUTTON COMP.	1					
13	97880–05025	.SCREW, PAN HEAD	2					
14	6CS–14305–12	THROTTLE LEVER COMP	1					
15	6EX–82154–00	CASE	1					
16	6CS–6725F–00	BOLT, THROTTLE	2					
17	F3Y–U143G–00	SPACER	1					
18	91380–04030	BOLT	1					
19	90201–04810	WASHER, PLATE	1					

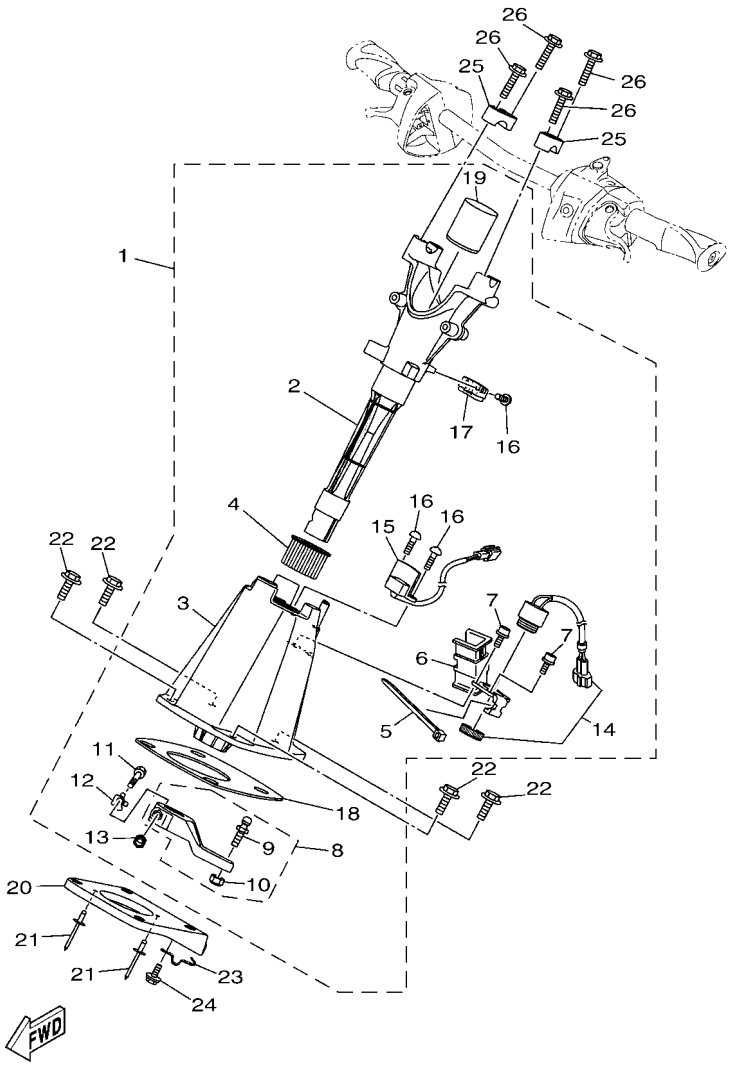

F3Y1100-S300

FIG. 29 STEERING 2

REF. NO.	PART NO.	DESCRIPTION	F3YM					REMARKS
1	F3Y–61400–02	STEERING MASTER ASSY	1					
2	F3Y–6152D–00	.SHAFT	1					
3	F2X–6152M–01	.HOUSING ASSY	1					
4	F1K–6134M–00	.BUSH	1					
5	703–82591–00	.BAND	1					
6	F2X–6146H–00	.SPACER, BRKT.	1					
7	F1B–613C1–00	.SCREW	2					
8	F1K–6153R–00	.ARM ASSY.	1					
9	EU0–61461–02	..STUD, JOINT BALL	1					
10	95720–06300	..NUT, SELF-LOCKING	1					
11	F1K–61355–00	.BOLT	1					
12	F1K–6142B–00	.PLATE, RETAINING	1					
13	95720–08300	.NUT, SELF-LOCKING	1					
14	F1S–68341–00	.BUZZER	1					
15	F2X–6838B–01	.SENSOR, MAGNET	1					
16	F2X–613C1–00	.SCREW	3					
17	F2X–6838C–01	.MAGNET	1					
18	F1K–6143C–00	.SEAL, RUBBER	1					
19	F2X–61435–00	.PIPE, SEAL	1					
20	F3Y–U1467–00	BRACKET,STOPPER CABLE	1					
21	90267–489U2	RIVET, BLIND	2					
22	90119–08836	BOLT, WITH WASHER	4					
23	F1K–U1468–03	STOPPER, CABLE	1					
24	90119–069UH	BOLT, WITH WASHER	1					
25	EU0–23814–31	HOLDER, HANDLE UPPER	2					
26	90119–08827	BOLT, WITH WASHER	4					

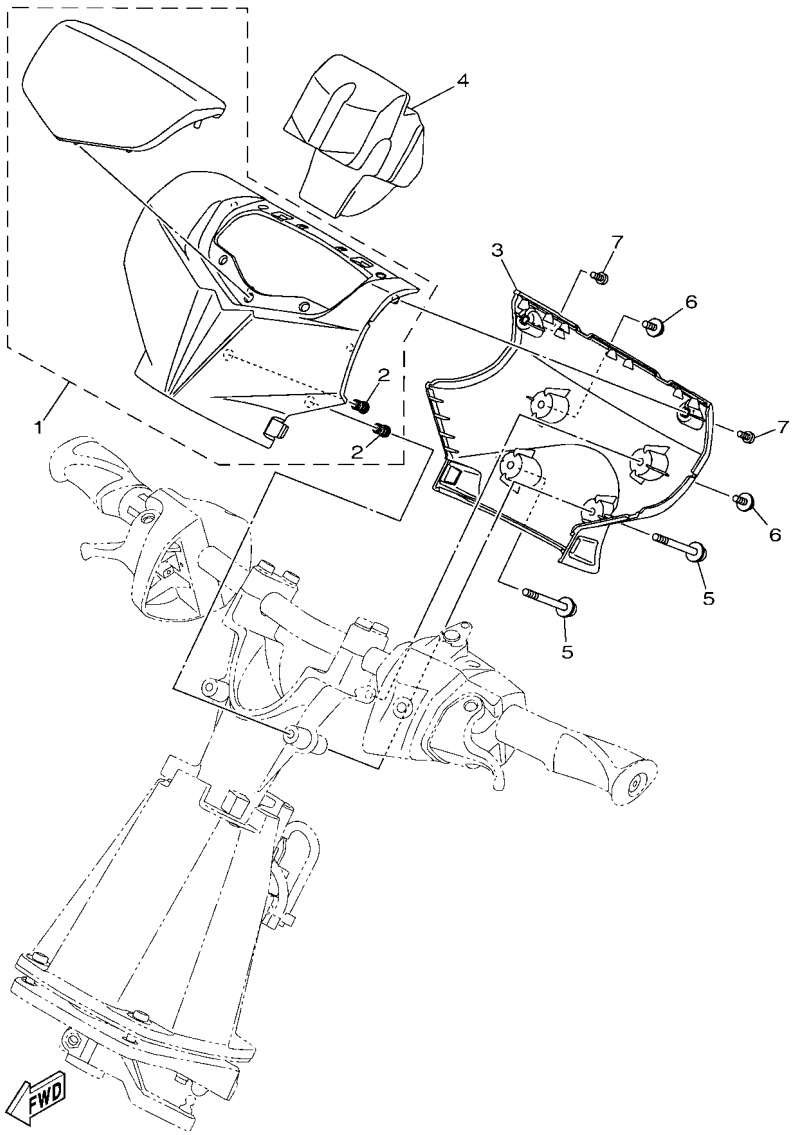

F3Y7100-T310

FIG. 30 STEERING 3

REF. NO.	PART NO.	DESCRIPTION	F3YM					REMARKS
1	F3Y–U1421–20	PAD, STEERING	1					
2	F3Y–U517E–00	.NUT	2					
3	F3Y–U143E–00	PAD, STEERING 2	1					
4	F3Y–U156E–00	PAD 1	1					
5	F3Y–U1355–00	BOLT	2					
6	F3Y–U2624–00	BOLT	2					
7	F2S–U13C1–00	SCREW	2					

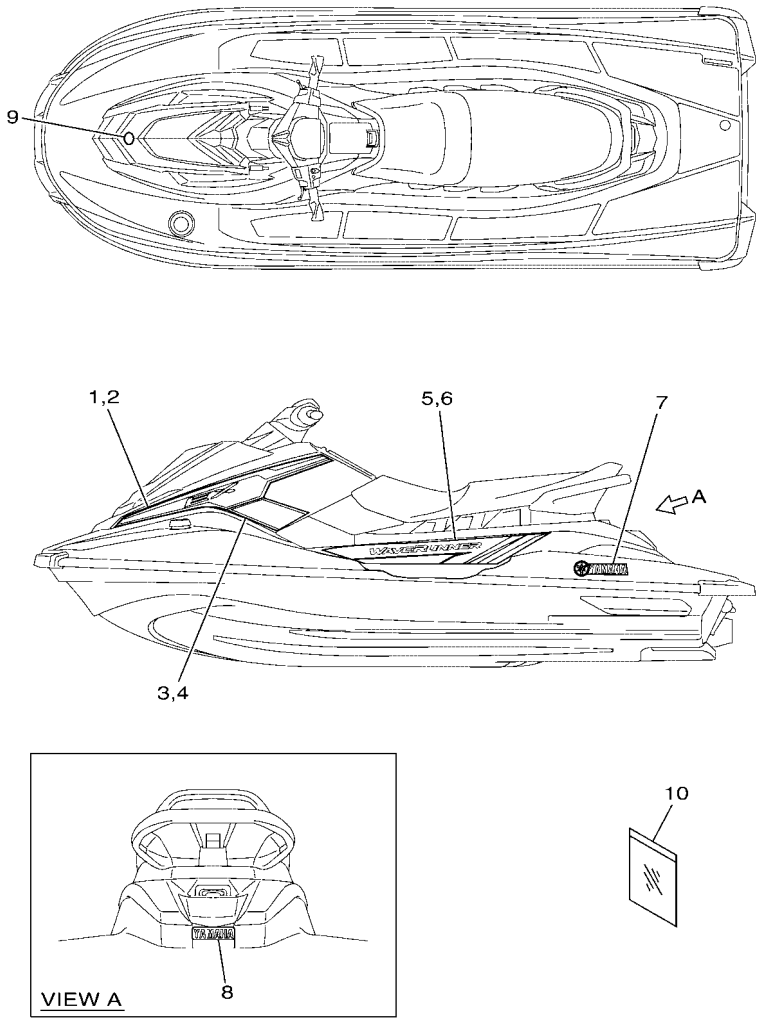

F3YM100-W310

FIG. 31 GRAPHICS

REF. NO.	PART NO.	DESCRIPTION	F3YM					REMARKS
1	F3Y–U417D–R0	GRAPHIC 3 (LH)	1					
2	F3Y–U417E–R0	GRAPHIC 4 (RH)	1					
3	F3Y–U417F–R0	GRAPHIC 5 (LH)	1					
4	F3Y–U417G–R0	GRAPHIC 6 (RH)	1					
5	F3Y–U417H–R0	GRAPHIC 7 (LH)	1					
6	F3Y–U417J–R0	GRAPHIC 8 (RH)	1					
7	F2N–U411C–00	EMBLEM, YAMAHA	2					
8	F1B–U411C–02	EMBLEM, YAMAHA	1					
9	F3Y–U411H–02	EMBLEM, TUNING FORK	1					
10	F3Y–U5901–00	BAG, VINYL	1					

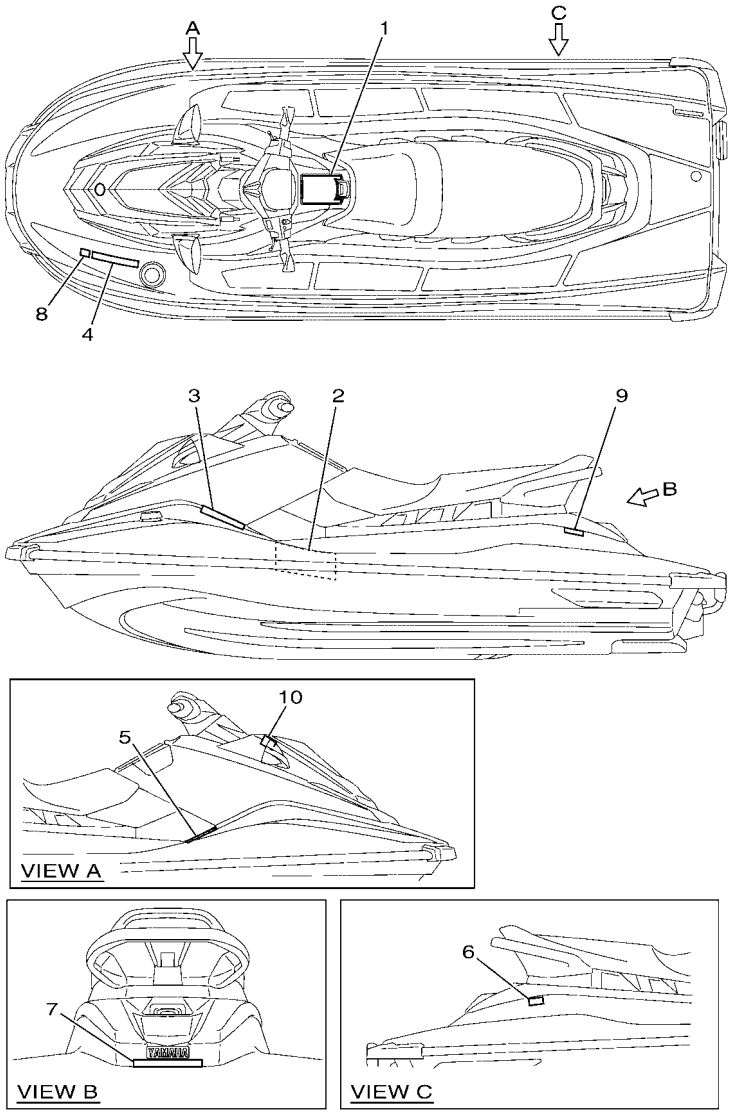

F3YM100-W320

FIG. 32 IMPORTANT LABELS

REF. NO.	PART NO.	DESCRIPTION	F3YM					REMARKS
1	F3Y–U41B1–30	LABEL, WARNING UNIFORM 1	1					
2	F3V–U41B1–10	LABEL, WARNING UNIFORM 1	1					
3	F3V–U41B1–30	LABEL, WARNING UNIFORM 1	1					
4	F3Y–U415B–30	LABEL, WARNING(FUEL)	1					
5	F1B–U41F5–11	LABEL, FIRE EXTINGUISHER 1	1					
6	F3V–U416A–30	WARNING LABEL ASSY.	1					
7	F4E–U41E1–40	LABEL, SET 1	1					
8	B4F–F817K–00	LABEL, FUEL	1					FOR EUR
9	GJ3–U419E–00	LABEL 4	1					FOR CAN
10	F3Y–U413P–00	LABEL, BUILDERS PLATE	1					FOR EUR

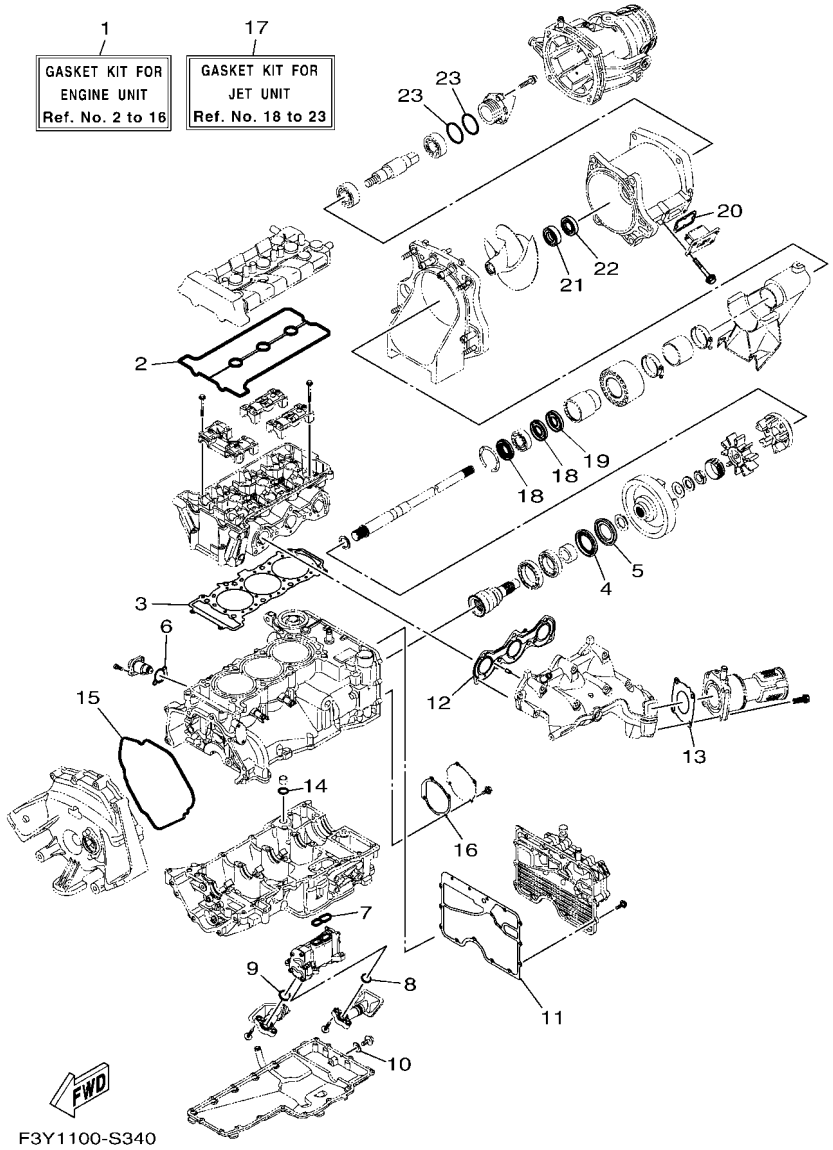

FIG. 33 REPAIR KIT 1

REF. NO.	PART NO.	DESCRIPTION	F3YM					REMARKS
1	6GA–W0001–01	GASKET KIT FOR ENGINE UNIT	1					
2	6EY–11193–00	.GASKET, HEAD COVER 1	1					
3	6EY–11181–00	.GASKET, CYLINDER HEAD 1	1					
4	93101–40001	.OIL SEAL	1					
5	93101–40002	.OIL SEAL	1					
6	2C0–12213–00	.GASKET, TENSIONER CASE	1					
7	6EY–13563–00	.GASKET	1					
8	6EY–13477–00	.GASKET	1					
9	6EY–13476–00	.GASKET	1					
10	90430–08209	.GASKET	1					
11	6EY–15453–00	.GASKET	1					
12	6GA–14613–00	.GASKET, EXHAUST PIPE	1					
13	6GA–14739–00	.GASKET, MUFFLER DAMPER 1	1					
14	93210–17010	.O-RING	1					
15	6EY–15461–00	.GASKET, CRANKCASE COVER 2	1					
16	6EY–15463–01	.GASKET, 2	1					
17	6GA–W0001–20	GASKET KIT FOR JET UNIT	1					
18	93101–25M55	.OIL SEAL	2					
19	93101–25M56	.OIL SEAL	1					
20	6GA–G2414–00	.O-RING	1					
21	93102–25M34	.OIL SEAL	1					
22	93101–25M50	.OIL SEAL	1					
23	93210–44003	.O-RING	2					

PART NO.	REF. NO.
6EY–11102–00	1 – 2
6EY–11110–00	1 – 1
6EY–11119–00	1 – 20
6EY–1111E–10	1 – 18
5VY–1111G–00	1 – 15
6EY–11125–00	8 – 25
6EY–11126–10	8 – 27
2C0–11133–11	1 – 3
8HF–11134–10	1 – 4
6EY–11164–00	8 – 20
6EY–11166–10	8 – 16
6EY–11181–00	1 – 16
	33 – 3
6EY–11191–10	1 – 9
6EY–11193–00	1 – 11
	33 – 2
69J–11301–10	2 – 22
68V–11325–02	2 – 23
67F–11328–00	2 – 24
6EY–11400–00	3 – 1
6EY–11406–00	3 – 14
2HC–11407–00	3 – 26
3LD–11416–10	3 – 6
3LD–11416–20	3 – 6
3LD–11416–30	3 – 6
3LD–11416–40	3 – 6
3LD–11416–50	3 – 6
3LD–11416–60	3 – 6
3LD–11416–70	3 – 6
8ES–11428–01	2 – 8
8ES–11454–00	3 – 28
2HC–11464–00	3 – 31
6EY–11478–00	3 – 30
6EY–11531–00	3 – 27
6EY–11557–00	3 – 20
6GA–11571–00	3 – 21
8KH–11603–01	3 – 8
8KH–11631–00	3 – 7
6EY–11633–00	3 – 9
B0F–11650–00	3 – 2
5JW–11654–00	3 – 3
5JW–11656–00	3 – 5
5JW–11656–10	3 – 5
5JW–11656–20	3 – 5
5JW–11656–30	3 – 5
5JW–11656–40	3 – 5
5JW–11656–50	3 – 5
6EY–11917–00	3 – 17

PART NO.	REF. NO.
8GL–12111–10	4 – 5
8GL–12113–00	4 – 8
1RC–12116–00	4 – 7
3D7–12117–00	4 – 9
1WG–12118–00	4 – 10
2HC–12119–00	4 – 11
8GL–12121–10	4 – 6
6EY–12153–01	4 – 13
1HX–12168–00	4 – 12
1HX–12168–20	4 – 12
1HX–12168–40	4 – 12
1HX–12168–60	4 – 12
1HX–12168–80	4 – 12
1HX–12168–A0	4 – 12
1HX–12168–F0	4 – 12
1HX–12168–H1	4 – 12
1HX–12168–K1	4 – 12
1HX–12168–M1	4 – 12
1HX–12168–R1	4 – 12
1HX–12168–U1	4 – 12
1HX–12168–W1	4 – 12
1HX–12168–Y1	4 – 12
1HX–12169–11	4 – 12
1HX–12169–31	4 – 12
1HX–12169–50	4 – 12
1HX–12169–70	4 – 12
1HX–12169–90	4 – 12
1HX–12169–E0	4 – 12
1HX–12169–G0	4 – 12
1HX–12169–J0	4 – 12
1HX–12169–L0	4 – 12
1HX–12169–N0	4 – 12
1HX–12169–T0	4 – 12
6EY–12170–00	4 – 1
2HC–12176–00	4 – 3
6EY–12180–00	4 – 2
8KH–12210–00	4 – 15
2C0–12213–00	4 – 16
	33 – 6
5BE–12241–00	1 – 10
6EY–12251–00	4 – 18
2HC–12252–00	4 – 19
6EY–12279–00	4 – 21
6D3–12411–00	10 – 27
6EY–12413–00	10 – 28
6EY–12577–00	10 – 21
6S5–12579–00	10 – 23
6EY–12580–00	10 – 3

PART NO.	REF. NO.
6EY–12584–00	10 – 8
6EY–12880–00	5 – 8
8ES–13284–00	2 – 17
6EY–13300–00	7 – 1
6EY–13355–00	7 – 2
6EY–13405–00	7 – 5
6EY–13406–00	7 – 8
6EY–13417–10	7 – 18
5GH–13440–61	7 – 17
6EY–13455–00	7 – 20
6EY–13470–00	8 – 2
6EY–13476–00	7 – 9
	33 – 9
6EY–13477–00	7 – 6
	33 – 8
6EY–13532–00	5 – 13
6EY–13556–00	8 – 3
8FP–13556–10	5 – 11
6EY–13557–00	8 – 5
6EY–13563–00	7 – 4
	33 – 7
6EY–13641–01	5 – 2
6EY–13750–00	5 – 1
2HC–13761–00	5 – 5
6S5–13907–04	17 – 1
6EY–14126–00	5 – 4
6EY–14156–00	5 – 3
68V–1416A–00	5 – 6
6CS–14305–12	28 – 14
6EY–14410–01	6 – 7
6EY–14419–00	6 – 12
6EY–14436–00	6 – 11
6BH–14445–00	5 – 12
6EY–14451–00	6 – 8
6EY–14452–00	6 – 10
6EY–14462–00	6 – 9
6EY–14470–00	6 – 16
6EY–14485–00	6 – 13
6GA–14613–00	9 – 1
	33 – 12
6GA–1469W–00	9 – 8
6GA–14711–00	9 – 2
6GA–14739–00	9 – 6
	33 – 13
6GA–14752–00	9 – 13
6GA–14784–00	9 – 7
6EY–15109–09	2 – 2
6EY–15362–10	8 – 14

PART NO.	REF. NO.
3Y1–15363–10	1 – 12
4JT–15381–01	2 – 6
6EY–15421–00	2 – 18
6EY–15453–00	8 – 1
	33 – 11
6EY–15461–00	2 – 19
	33 – 15
6EY–15463–01	2 – 29
	33 – 16
6EY–15486–00	7 – 14
2HC–15512–00	13 – 2
8FA–15515–00	13 – 1
8ES–15521–00	13 – 3
6EY–15589–01	2 – 28
6EY–15590–00	13 – 4
EU0–23814–31	29 – 25
70R–24489–00	25 – 4
6CN–2450B–10	5 – 16
70R–24543–00	25 – 3
6EY–24864–00	10 – 19
6EX–2812A–00	15 – 25
6EY–41661–10	18 – 4
6EY–41662–00	18 – 5
6GA–44517–00	18 – 1
6EY–44574–00	18 – 2
6EY–45155–00	3 – 25
6GA–45511–00	12 – 3
6EY–4581J–00	3 – 35
68N–5112T–00	21 – 12
6DU–51319–00	11 – 16
F1K–6134M–00	29 – 4
F1K–61355–00	29 – 11
F1B–613C1–00	29 – 7
F2X–613C1–00	29 – 16
F3Y–61400–02	29 – 1
F1K–6142B–00	29 – 12
F2X–61435–00	29 – 19
F1B–61438–00	27 – 2
F1K–6143C–00	29 – 18
F2N–61460–00	27 – 5
EU0–61461–02	29 – 9
F1B–61461–02	27 – 4
F2X–6146H–00	29 – 6
F3Y–61481–02	27 – 1
F1B–6151S–00	27 – 3
F3Y–6152D–00	29 – 2
F2X–6152M–01	29 – 3
F1K–6153R–00	29 – 8

PART NO.	REF. NO.
F1K–61624–00	21 – 21
F0X–61637–00	21 – 24
EU0–61652–00	10 – 7
	21 – 2
F0X–61652–01	21 – 25
EW2–62142–00	25 – 2
F1G–62149–00	25 – 8
F2F–6214A–00	25 – 1
GP7–62159–02	25 – 6
GA7–65772–00	26 – 3
6CS–6725F–00	28 – 16
F3Y–67743–01	25 – 36
F1B–67747–00	25 – 14
GU2–6822E–01	17 – 18
6S5–682E0–00	17 – 2
F3Y–68310–00	28 – 7
FK7–68311–02	28 – 9
FK7–68312–02	28 – 11
FK7–68313–02	28 – 12
F1S–68341–00	29 – 14
EW2–68348–00	28 – 8
F2X–6838B–01	29 – 15
F2X–6838C–01	29 – 17
4D9–81168–00	16 – 12
60E–81315–00	16 – 2
60E–81328–00	13 – 10
6S5–81364–10	8 – 9
6EY–81410–00	13 – 8
6EY–81450–00	13 – 7
6EY–81800–00	14 – 1
6EY–81826–00	14 – 6
6EY–81840–00	14 – 4
11H–81844–00	14 – 2
1FK–81847–00	14 – 3
3TB–81847–00	14 – 5
	14 – 7
6EY–81940–09	15 – 13
6EY–81953–00	15 – 15
6EX–8195A–00	15 – 24
6D3–81960–01	15 – 10
6EY–81975–00	15 – 6
6GA–82115–01	15 – 16
6GA–82116–00	17 – 29
6EY–82117–00	15 – 17
67F–82151–00	15 – 22
67F–82151–10	15 – 23
67F–82151–30	15 – 20
67F–82151–40	15 – 21

PART NO.	REF. NO.
6EX–82154–00	28 – 15
6EX–82170–11	15 – 19
6EX–82310–00	15 – 4
6A0–82317–00	15 – 8
	15 – 26
6EY–82355–00	15 – 14
5S7–82380–00	5 – 7
68V–82504–00	16 – 1
60E–82556–00	17 – 3
6CR–82560–00	16 – 9
6ET–82576–00	16 – 3
703–82591–00	29 – 5
6EY–82593–00	15 – 29
6GA–8259L–30	15 – 12
6CS–8273J–10	16 – 14
6EY–83618–10	16 – 18
60E–83627–00	6 – 17
6EY–84385–00	10 – 6
6AA–85542–00	15 – 27
61A–85790–00	16 – 7
6DE–85790–00	16 – 17
8FP–85886–00	5 – 14
2S3–85896–02	16 – 11
6GA–8591A–31	15 – 2
6EY–8591S–00	15 – 3
6GA–E243A–00	10 – 30
6GA–E243E–00	10 – 1
67X–E2590–00	10 – 32
67X–E2590–10	10 – 32
B4F–F817K–00	32 – 8
6GA–G2414–00	11 – 7
	33 – 20
6GA–G5235–00	12 – 2
6GA–G5332–00	12 – 1
6GA–G5514–00	11 – 10
6GA–G5593–00	12 – 8
6GA–G5831–00	11 – 1
6GA–G6882–00	11 – 6
5FU–H2100–20	17 – 4
6GA–R1312–01	11 – 4
6BU–R1313–00	11 – 25
6GA–R1318–00	11 – 18
6GA–R1321–00	11 – 17
6EX–R1326–10	11 – 13
6GA–R1333–00	11 – 34
6GA–R1381–00	12 – 13
6GA–R1959–00	11 – 28
F3Y–U1174–00	22 – 4

PART NO.	REF. NO.
F3Y–U1174–00	22 – 14
F3Y–U1338–00	24 – 20
F3Y–U1355–00	30 – 5
F2S–U13C1–00	19 – 2
	30 – 7
F3Y–U1421–20	30 – 1
F3Y–U1426–00	11 – 35
	11 – 36
F2N–U142L–00	12 – 16
	17 – 13
	22 – 3
	22 – 13
	26 – 16
F3Y–U142L–00	24 – 17
F3Y–U143E–00	30 – 3
F3Y–U143G–00	28 – 17
F3Y–U1467–00	29 – 20
F1K–U1468–03	29 – 23
F2S–U1516–00	28 – 5
F3Y–U153K–00	20 – 7
F3Y–U1552–00	28 – 1
F2S–U155D–03	28 – 2
F3Y–U156E–00	30 – 4
F2N–U1628–02	21 – 16
	24 – 21
F1B–U1653–02	21 – 20
F2C–U1743–00	17 – 5
F3Y–U2127–00	23 – 1
F3Y–U213G–01	23 – 2
F3Y–U2155–01	12 – 10
F1S–U2280–02	21 – 32
F1S–U2285–00	21 – 33
F3Y–U2511–00	22 – 1
F3Y–U2512–03	22 – 5
F3Y–U2519–41	22 – 6
F3Y–U251D–00	22 – 9
F3Y–U251E–00	22 – 10
F3Y–U252C–00	22 – 15
F3Y–U252D–50	22 – 16
F3Y–U2624–00	30 – 6
F3Y–U264L–00	20 – 2
F3Y–U2663–00	20 – 4
F3Y–U266B–01	24 – 6
F3Y–U266D–10	24 – 11
F3Y–U266E–10	24 – 13
F1W–U269B–00	21 – 1
F3Y–U271B–00	24 – 15
F3Y–U2723–10	19 – 1

PART NO.	REF. NO.
F3Y–U2724–10	20 – 10
F2C–U2733–00	26 – 19
F3Y–U273B–10	11 – 30
F3Y–U2875–00	20 – 9
F4L–U3222–00	11 – 31
F3Y–U351H–10	22 – 20
F3Y–U351J–10	22 – 21
F3Y–U351K–10	22 – 22
F3Y–U351M–10	22 – 23
F3Y–U351N–10	22 – 24
F3Y–U351P–10	22 – 25
F3Y–U351R–10	22 – 26
F3Y–U351S–10	22 – 27
F3Y–U353B–A0	19 – 9
F3Y–U353B–B0	19 – 10
F3Y–U3581–10	22 – 19
F3Y–U371A–J0	24 – 1
F3Y–U371B–J0	24 – 2
F3Y–U3746–00	12 – 15
F3Y–U374A–01	24 – 5
F1K–U3774–00	24 – 7
F1B–U3850–02	24 – 3
F2N–U411C–00	31 – 7
F1B–U411C–02	31 – 8
F3Y–U411H–02	31 – 9
F3Y–U413P–00	32 – 10
F3Y–U415B–30	32 – 4
F3V–U416A–30	32 – 6
F3Y–U417D–R0	31 – 1
F3Y–U417E–R0	31 – 2
F3Y–U417F–R0	31 – 3
F3Y–U417G–R0	31 – 4
F3Y–U417H–R0	31 – 5
F3Y–U417J–R0	31 – 6
GJ3–U419E–00	32 – 9
F3V–U41B1–10	32 – 2
F3V–U41B1–30	32 – 3
F3Y–U41B1–30	32 – 1
F4E–U41E1–40	32 – 7
F1B–U41F5–11	32 – 5
F3Y–U4261–00	26 – 10
F3Y–U475A–00	20 – 3
F1W–U491K–00	22 – 11
F3Y–U491K–02	24 – 14
GP7–U4953–10	21 – 18
	21 – 19
	24 – 22
F3Y–U513M–00	20 – 6

PART NO.	REF. NO.
F3Y–U516N–10	19 – 3
F3Y–U516P–00	19 – 4
F2X–U5175–00	19 – 5
	19 – 14
F3Y–U517B–50	20 – 1
F3Y–U517E–00	30 – 2
F3Y–U517H–00	20 – 8
F1K–U5772–04	25 – 34
	26 – 5
F3Y–U5901–00	31 – 10
F3Y–U591A–10	24 – 12
F3Y–U592A–10	24 – 10
F3Y–U72C0–00	11 – 29
6GA–U72M2–00	11 – 19
EU0–U7354–00–01	18 – 10
EU0–U7354–00–03	18 – 10
EU0–U7354–00–05	18 – 10
EU0–U7354–00–10	18 – 10
EU0–U7354–00–20	18 – 10
F1B–U751G–00	26 – 14
F2C–U753B–01	26 – 17
F3Y–U7550–01	26 – 1
F3Y–U7555–00	26 – 7
F3Y–U7557–00	11 – 41
F2C–U7564–00	26 – 18
GJ1–U7578–21	17 – 21
F1S–U757B–01	26 – 15
F3Y–U758D–00	26 – 12
F2S–U759B–00	25 – 37
	25 – 38
F3Y–U759B–00	19 – 8
F1K–U759C–00	25 – 41
F1W–U759C–01	17 – 7
	25 – 39
	25 – 40
F1B–U761D–02	21 – 4
F3Y–U7711–02	25 – 12
6GA–U771G–00	21 – 10
6GA–U773D–00	21 – 14
F4L–U773D–00	25 – 43
F3Y–U773D–10	10 – 2
F3Y–U773D–20	10 – 31
6GA–U773E–00	21 – 11
F3Y–U7767–00	25 – 27
F1B–U7773–00	25 – 13
F2S–U7823–01	17 – 17
F2N–U7831–10	25 – 16
GP7–U7832–01	25 – 17

PART NO.	REF. NO.
GP7–U7833–11	25 – 18
GP7–U7834–00	25 – 21
GP7–U7835–00	25 – 19
GP7–U783F–00	25 – 23
F3Y–U7844–00	25 – 24
6GA–U784C–00	21 – 13
F3Y–U7856–00	25 – 31
GP7–U785G–10	25 – 33
GP7–U785H–00	25 – 28
F2N–U8169–00	21 – 31
F4L–U820A–00	17 – 16
F2S–U8211–00	17 – 9
EU0–U821D–00	26 – 2
F4P–U821D–00	17 – 15
F1S–U8221–00	17 – 8
	25 – 42
	26 – 11
EU0–U8221–30	17 – 6
F3J–U822E–00	17 – 19
F2C–U826C–00	24 – 18
F3Y–U828H–30	19 – 11
F1W–U828M–00	17 – 22
	21 – 7
	23 – 3
	25 – 9
	26 – 20
	27 – 8
F0V–U8572–01	11 – 32
F2S–U8577–00	11 – 33
F2S–U8592–00	17 – 10
F2S–U8593–00	17 – 11
F3Y–U883B–00	12 – 19
F3Y–U883E–00	12 – 14
F3Y–U883N–00	21 – 27
F3Y–U883P–00	21 – 28
F3Y–U883T–00	21 – 29
F3Y–U892D–00	12 – 20
F3Y–U892F–00	26 – 24
6GA–W0001–01	33 – 1
6GA–W0001–20	33 – 17
6EY–W009B–01	2 – 1
90105–06027	1 – 5
90105–06035	10 – 29
90105–06M07	2 – 25
90105–06M15	8 – 21
90105–07004	4 – 4
90105–08243	5 – 9
90105–08860	21 – 30

PART NO.	REF. NO.
90105–10M49	18 – 6
90105–12101	3 – 12
90109–06295	4 – 20
90109–06308	2 – 12
90109–066F0	1 – 14
90109–06832	12 – 17
90109–06M92	18 – 3
90109–08041	11 – 39
90110–06040	21 – 26
90110–06172	7 – 7
	7 – 10
90110–06274	4 – 17
90110–06287	7 – 12
90110–06335	7 – 13
90110–06382	28 – 3
90110–06822	11 – 15
90110–08212	13 – 5
90111–06803	22 – 2
	22 – 12
90111–06873	19 – 13
90119–06078	1 – 19
90119–06311	15 – 7
90119–06820	19 – 16
90119–06832	17 – 14
90119–06882	19 – 7
90119–06889	11 – 8
90119–06891	12 – 11
90119–069UH	29 – 24
90119–069UP	24 – 4
90119–06MA3	16 – 16
90119–08034	9 – 4
90119–08097	9 – 5
90119–08169	6 – 3
90119–08187	6 – 4
90119–08823	18 – 9
90119–08827	11 – 24
	29 – 26
90119–08829	24 – 16
90119–08836	29 – 22
90119–08840	11 – 26
90119–08859	18 – 8
90119–089U7	11 – 40
90119–09004	2 – 3
90119–10004	1 – 8
90119–10067	11 – 3
90119–10804	24 – 9
90119–10808	11 – 5
90149–06190	7 – 3

PART NO.	REF. NO.
90151–06024	2 – 7
90160–05003	15 – 28
90169–049U1	25 – 20
90176–08080	5 – 19
90179–08327	3 – 4
90179–20010	3 – 24
90183–06902	19 – 12
90201–04810	28 – 19
90201–068G0	28 – 4
90201–06906	27 – 6
90201–10591	3 – 34
90201–109U6	24 – 8
90201–121H0	3 – 13
90201–20030	3 – 22
90201–24800	12 – 9
90201–30013	13 – 6
90208–20001	3 – 23
90215–10003	3 – 33
90267–329UR	25 – 22
90267–48806	17 – 23
	21 – 8
	23 – 4
	25 – 10
	26 – 21
	27 – 10
90267–489U1	17 – 12
	19 – 6
	19 – 15
	24 – 19
	25 – 35
	26 – 4
	26 – 6
90267–489U2	25 – 5
	29 – 21
90267–489U6	25 – 7
90267–489U8	21 – 5
	22 – 7
	22 – 18
90269–08801	20 – 5
90280–03045	3 – 11
90387–06119	15 – 9
90387–06289	12 – 12
90387–06M05	8 – 10
90387–08M06	11 – 27
90387–08M37	6 – 2
	6 – 15
90401–20008	7 – 16
90430–06M03	2 – 26

PART NO.	REF. NO.
90430–08119	1 – 7
90430–08209	7 – 24
	33 – 10
90430–12002	11 – 37
90445–14025	11 – 21
90445–16019	10 – 15
90445–16020	10 – 18
90445–18012	10 – 9
90445–18018	10 – 25
90445–18020	8 – 22
90445–18M06	7 – 19
90445–21015	10 – 13
90446–24M44	10 – 16
90446–24M89	10 – 5
90446–24MF4	8 – 23
90447–15005	11 – 22
90447–19004	8 – 17
90447–19014	8 – 28
	10 – 10
90450–90002	6 – 5
90450–99804	26 – 9
90450–99808	9 – 11
90450–99810	9 – 12
90464–10008	17 – 26
90464–20005	16 – 19
90464–32801	17 – 20
	17 – 24
	17 – 28
	25 – 11
	26 – 22
	27 – 9
90464–35132	8 – 30
	10 – 12
	16 – 5
90464–99804	23 – 5
90465–11829	11 – 23
	21 – 6
	25 – 29
	25 – 30
	25 – 32
90465–13M18	6 – 6
90465–13M39	16 – 6
90467–110A1	8 – 26
90467–150A1	10 – 17
90467–150A5	10 – 4
	26 – 25
90467–160A0	10 – 11
	10 – 20

PART NO.	REF. NO.
90467–160A0	10 – 22
	10 – 24
	10 – 26
90467–170A4	8 – 19
	8 – 24
	8 – 29
90467–170A5	7 – 21
90467–180A5	21 – 15
90467–200A3	8 – 18
	10 – 14
	10 – 33
	10 – 35
90467–240A0	10 – 34
90467–240A3	10 – 36
90480–06M46	8 – 8
90480–22M15	6 – 1
	6 – 14
90601–118UF	11 – 20
	21 – 3
90601–155U4	12 – 18
	25 – 25
	25 – 26
90601–179U8	26 – 8
	26 – 13
90601–200U2	17 – 25
	17 – 27
	21 – 9
	26 – 23
91314–06065	1 – 17
91317–06014	13 – 11
91317–06035	13 – 9
91380–04030	28 – 6
	28 – 18
91380–06016	16 – 13
91380–06020	8 – 11
92990–06100	14 – 10
92990–10600	16 – 8
92990–12200	11 – 38
	21 – 23
9299R–05200	21 – 35
	22 – 8
	22 – 17
93101–25M50	11 – 12
	33 – 22
93101–25M55	12 – 4
	33 – 18
93101–25M56	12 – 7
	33 – 19

PART NO.	REF. NO.
93101–40001	3 – 18
	33 – 4
93101–40002	3 – 19
	33 – 5
93102–25M34	11 – 11
	33 – 21
93210–17010	2 – 16
	33 – 14
93210–19123	1 – 13
93210–19522	8 – 4
93210–24M79	8 – 15
93210–32172	16 – 15
93210–44003	11 – 14
	33 – 23
93306–00702	3 – 15
93306–205XG	12 – 6
93306–255X7	11 – 9
93306–30323	2 – 5
93306–90901	3 – 16
93310–42239	3 – 29
93450–19095	3 – 10
93450–32152	2 – 9
93606–12019	9 – 3
	18 – 7
93606–19M23	8 – 6
94580–25060	7 – 15
94591–57140	4 – 14
94702–00409	15 – 1
95024–06012	2 – 30
95024–06016	9 – 9
95024–06020	7 – 22
95024–08012	1 – 6
95024–08030	9 – 10
95380–06700	14 – 9
9538R–06700	27 – 7
95612–08625	5 – 18
95720–06300	29 – 10
95720–08300	29 – 13
9572R–05300	21 – 36
9572R–06300	25 – 15
9572R–08300	21 – 17
	24 – 23
95812–06012	4 – 22
95812–08070	2 – 4
95814–06020	5 – 10
	8 – 12
	15 – 11
95814–06035	8 – 7

PART NO.	REF. NO.
95814–06045	2 – 15
95814–06055	2 – 13
	8 – 13
95814–06085	2 – 14
95814–08020	7 – 23
95880–06016	15 – 5
97012–10025	3 – 32
97513–05514	13 – 12
97513–08514	17 – 30
97513–08530	14 – 8
97513–08535	5 – 17
97513–08555	2 – 21
97702–50520	5 – 15
97780–60520	16 – 4
97880–03008	28 – 10
97880–05025	28 – 13
9788R–05025	21 – 34
97E95–06520	16 – 10
97E95–06612	15 – 18
97E95–08540	2 – 27
99009–52500	12 – 5
99530–08016	7 – 11
99530–10014	2 – 10
99530–10114	2 – 11
99590–08012	2 – 20
99590–14016	11 – 2
99780–12600	21 – 22

PART NO.	REF. NO.

PART NO.	REF. NO.