YAMAHA

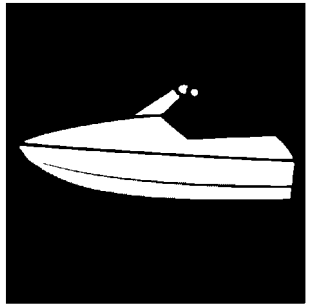

# PARTS CATALOGUE

# *Wave Runner GP1800R SVHO (W/Audio)*

# GP1800C-W ( F4P2 /6JNA/6JN1 )

# GP1800C-W ( F4P2 /6JNB/6JN1 )

1WF4P-100EA

( )

YAMAHA GENUINE Parts & Accessories

2022/4/26

| NEWS NO. | DATE | COMMENT |
|---|---|---|
| PE0-WV-220001 | Apr.,19,2022 | MOD:FIG.33 FUEL TANK LIST/ILLUSTRATION REVISION |

GP1800C-W
PARTS CATALOGUE
©2021 by Yamaha Motor Co., Ltd.
1st edition, July 2021
All rights reserved.
Any reprinting or unauthorized use
without the written permission of
Yamaha Motor Co., Ltd.
is expressly prohibited.
Printed in Japan.

# FOREWORD

This Parts Catalogue is related to the parts for the model(s) on the cover page. When you are ordering replacement parts, please refer to this Parts Catalogue and quote both part numbers and part names correctly.

1. Modifications or additions which have been made after the issue of the Parts Catalogue will be announced in the Parts News.
   It is advisable that you make the necessary corrections to the Parts Catalogue according to the Parts News.

2. Abbreviations
   The following abbreviations are used in this Parts Catalogue.

   "UR" Use specified parts number.

   "UN" Use as many as needed.

   "AP" Alternate Parts

   "LM" Locally Made (Parts need to be ordered locally)

   "F#" Frame No. (Applicable machine No.)

   "O/S" Over Size

3. The number of components for assembly
   - Parts, which are to be supplied in an assembly, are listed with a dot (.) in front of the part name as shown below.
   - The numeral appearing to the right of each component part indicates the quantity of parts for each assembly unit.

| PART NO. | DESCRIPTION | Q'TY | REMARKS |
|---|---|---|---|
| 2F5–83310–60 | FRONT FLASHER LIGHT ASSY | 2 | |
| 115–83311–60 | .BULB (6V–18W) | 1 | |

4. Applicable colours of graphics are represented in the "REMARKS" as shown below.

| PART NO. | DESCRIPTION | Q'TY | REMARKS |
|---|---|---|---|
| 2N4–24110–00–X5 | FUEL TANK COMP. | 2 | MXR |
| 3J1–24240–10 | .GRAPHIC, FUEL TANK | 1 | FOR MXR |

5. Note that the illustrations for reference in finding parts numbers are not to be used for assembling. When assembling, please use the applicable service manual.

6. The asterisk (*) before a reference number indicates modified items after the first edition.

7. Applicable Serial No.

Engine Serial No.

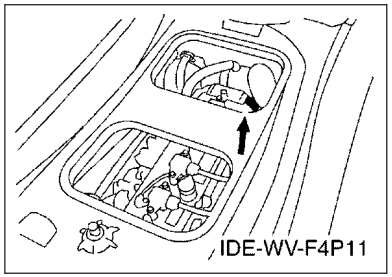


Primary Identification No.

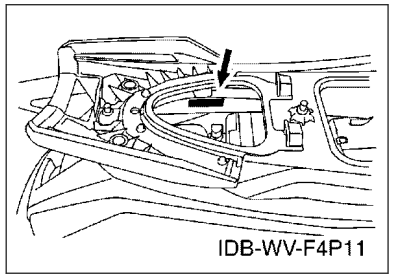


8. Applicable Colour Code (The (*) mark shows Model colour.)

| Abbreviation | Colour Name | Colour Code |
|---|---|---|
| SSA(*) | BLACK SOLID A | 1000 |
| VPBM6(*) | VIVID PURPLISH BLUE METALLIC 6 | 1002 |
| | | |
| | | |
| | | |
| | | |
| | | |
| | | |
| | | |
| | | |

9. Quantity Column Information

| Column No. | Name Of Q'ty Column | Destination |
|---|---|---|
| 1 | CAN | CANADA |
| 2 | EUR | EUROPE |
| | | |
| | | |
| | | |

10. Applicable Starting Serial No.

Engine Serial No.

| Serial No. | Name Of Q'ty Column | Model Code |
|---|---|---|
| | | |
| | | |
| | | |
| | | |
| | | |

Primary Identification No.

| Serial No. | Name Of Q'ty Column | Model Code |
|---|---|---|
| F4P-800101 | CAN | F4P2 |
| F4P-800101 | EUR | F4P2 |
| | | |
| | | |
| | | |

# CONTENTS

CYLINDER 1....1
CYLINDER 2....2
CRANKCASE....3
CRANKSHAFT & PISTON....5
VALVE....7
INTAKE 1....9
INTAKE 2....10
INTAKE 3....11
OIL PUMP....12
OIL PAN....13
OIL COOLER....14
BREATHER OIL....15
EXHAUST 1....16
EXHAUST 2....17
JET UNIT 1....19
JET UNIT 2....21
JET UNIT 3....22
JET UNIT 4....23
GENERATOR....24
STARTING MOTOR....25
ELECTRICAL 1....26
ELECTRICAL 2....28
ELECTRICAL 3....30
ELECTRICAL 4....32
ENGINE MOUNT....34
ENGINE HATCH 1....35
ENGINE HATCH 2....37
ENGINE HATCH 3....39
HULL & DECK....41
GUNWALE & MAT....44
VENTILATION....46
SEAT & UNDER LOCKER....47
FUEL TANK....49
BILGE PUMP....51
EXHAUST 3....52
CONTROL CABLE....53
STEERING 1....56
STEERING 2....57
STEERING 3....59
GRAPHICS....60
IMPORTANT LABELS....62
REPAIR KIT 1....63

## INDEX

NUMERICAL INDEX....65

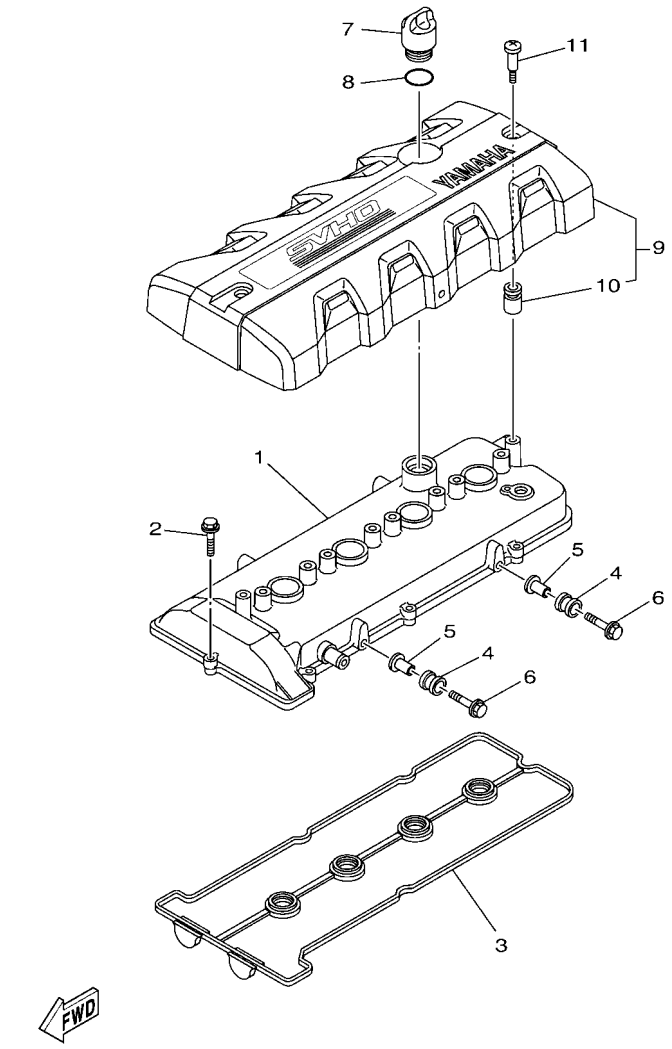


F3X7100-W010

## FIG. 1 CYLINDER 1

| REF. NO. | PART NO. | DESCRIPTION | CAN | EUR | | | | REMARKS |
|---|---|---|---|---|---|---|---|---|
| 1 | 6S5–11191–20 | COVER, CYLINDER HEAD 1 | 1 | 1 | | | | |
| 2 | 90105–06028 | BOLT, FLANGE | 8 | 8 | | | | |
| 3 | 6BH–11193–00 | GASKET, HEAD COVER 1 | 1 | 1 | | | | |
| 4 | 61N–82317–01 | DAMPER, IGNITION COIL | 2 | 2 | | | | |
| 5 | 90387–06119 | COLLAR | 2 | 2 | | | | |
| 6 | 95824–06025 | BOLT, FLANGE | 2 | 2 | | | | |
| 7 | 6S5–15363–00 | PLUG, OIL | 1 | 1 | | | | |
| 8 | 93210–24M79 | O-RING | 1 | 1 | | | | |
| 9 | 6JN–E110M–00 | COVER ASSY 1 | 1 | 1 | | | | |
| 10 | 6S5–E1328–00 | .GROMMET, ANODE | 2 | 2 | | | | |
| 11 | 6S5–E118E–01 | BOLT, COVER MOUNTING | 2 | 2 | | | | |

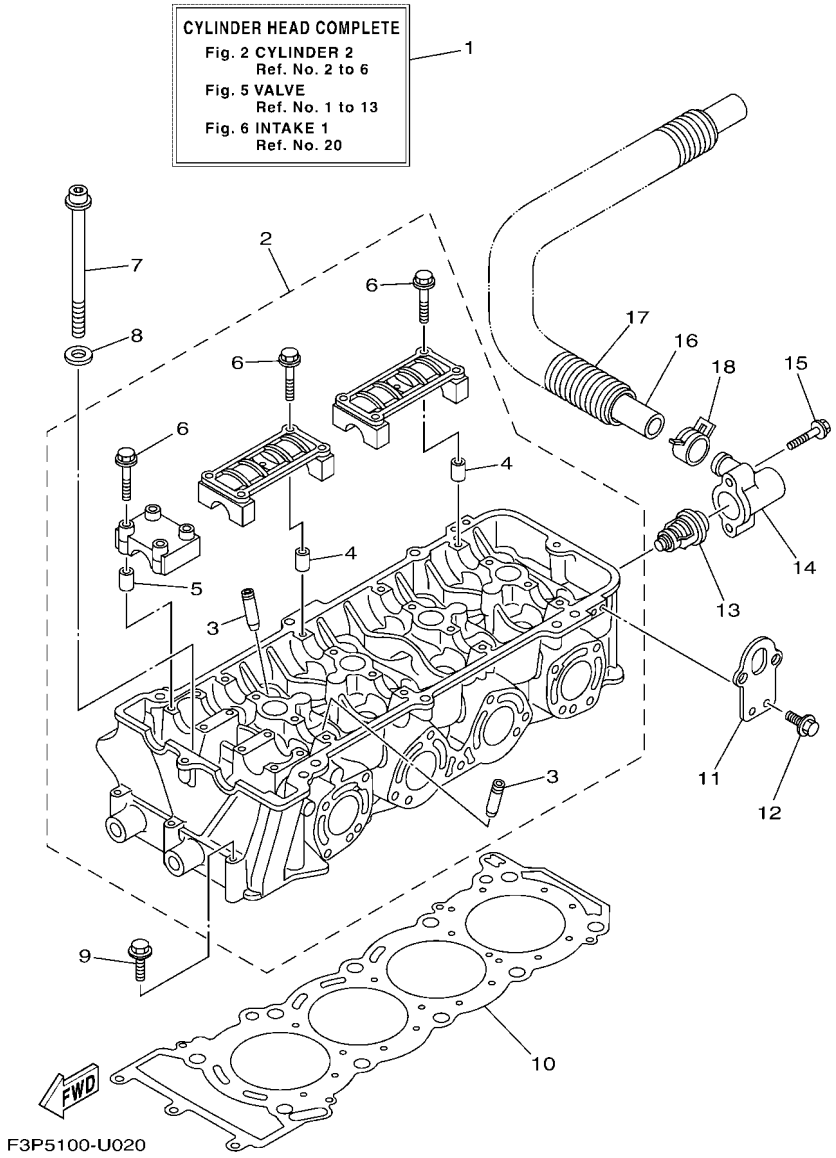


## FIG. 2 CYLINDER 2

| REF. NO. | PART NO. | DESCRIPTION | CAN | EUR | | | | REMARKS |
|---|---|---|---|---|---|---|---|---|
| 1 | 6ET–W009A–02–94 | CYLINDER HEAD COMPLETE | 1 | 1 | | | | |
| 2 | 6S5–11102–12 | CYLINDER HEAD ASSY | 1 | 1 | | | | |
| 3 | 6S5–11133–10 | .GUIDE, VALVE 1 | 16 | 16 | | | | |
| 4 | 91809–16002 | .PIN, DOWEL | 8 | 8 | | | | |
| 5 | 91809–16002 | .PIN, DOWEL | 4 | 4 | | | | |
| 6 | 90105–07009 | .BOLT, FLANGE | 24 | 24 | | | | |
| 7 | 6S5–12228–01 | BOLT | 10 | 10 | | | | |
| 8 | 6HL–12456–00 | WASHER | 10 | 10 | | | | |
| 9 | 97513–06555 | BOLT, WITH WASHER | 3 | 3 | | | | |
| 10 | 6JC–11181–00 | GASKET, CYLINDER HEAD 1 | 1 | 1 | | | | |
| 11 | 6BH–1111E–00 | HANGER, ENGINE 2 | 2 | 2 | | | | |
| 12 | 90119–06078 | BOLT, WITH WASHER | 4 | 4 | | | | |
| 13 | 6D3–12411–00 | THERMOSTAT | 1 | 1 | | | | |
| 14 | 6BH–12413–00 | COVER, THERMOSTAT | 1 | 1 | | | | |
| 15 | 90105–06035 | BOLT, FLANGE | 2 | 2 | | | | |
| 16 | 6S5–12578–00 | HOSE 3 | 1 | 1 | | | | |
| 17 | 90447–28008 | TUBE (L850) | 1 | 1 | | | | |
| 18 | 90467–240A0 | CLIP | 1 | 1 | | | | |

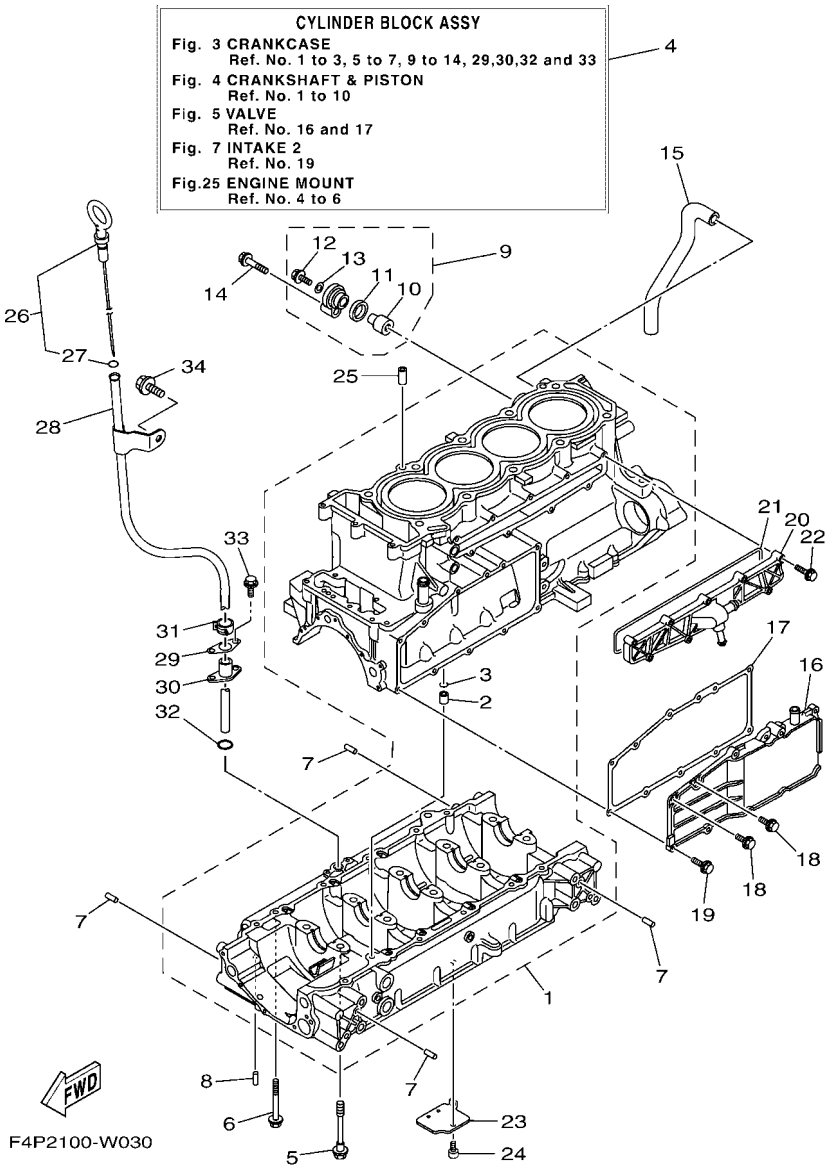


## FIG. 3 CRANKCASE

| REF. NO. | PART NO. | DESCRIPTION | CAN | EUR | | | | REMARKS |
|---|---|---|---|---|---|---|---|---|
| 1 | 6CS–15100–20 | CRANKCASE ASSY | 1 | 1 | | | | |
| 2 | 99530–10114 | .PIN, DOWEL | 1 | 1 | | | | |
| 3 | 93210–11453 | .O-RING | 1 | 1 | | | | |
| 4 | 6CS–W009B–20–94 | CYLINDER BLOCK ASSY | 1 | 1 | | | | |
| 5 | 90105–10071 | BOLT, FLANGE | 10 | 10 | | | | |
| 6 | 95814–06070 | BOLT, FLANGE | 12 | 12 | | | | |
| 7 | 93606–12019 | PIN, DOWEL | 8 | 8 | | | | |
| 8 | 93604–10M03 | PIN, DOWEL | 2 | 2 | | | | |
| 9 | 69J–11301–10 | ANODE COVER ASSY | 1 | 1 | | | | |
| 10 | 68V–11325–02 | .ANODE | 1 | 1 | | | | |
| 11 | 67F–11328–00 | .GROMMET, ANODE | 1 | 1 | | | | |
| 12 | 90105–06M07 | .BOLT, FLANGE | 1 | 1 | | | | |
| 13 | 90430–06M03 | .GASKET | 1 | 1 | | | | |
| 14 | 97E95–08540 | BOLT, HEXAGON W/W DEEP RECESS | 1 | 1 | | | | |
| 15 | 6S5–11377–00 | HOSE | 1 | 1 | | | | |
| 16 | 6S5–1131M–10–8P | COVER | 1 | 1 | | | | |
| 17 | 6BH–13557–00 | GASKET | 1 | 1 | | | | |
| 18 | 95024–06014 | BOLT, FLANGE (SMALL HEAD) | 2 | 2 | | | | |
| 19 | 95024–06020 | BOLT, FLANGE (SMALL HEAD) | 9 | 9 | | | | |
| 20 | 6CS–12469–A0 | JOINT 1 | 1 | 1 | | | | |
| 21 | 6CS–12517–00 | GASKET, WATER INLET | 1 | 1 | | | | |
| 22 | 95814–06035 | BOLT, FLANGE | 9 | 9 | | | | |
| 23 | 6S5–13337–10 | PLATE, BAFFLE LOWER | 1 | 1 | | | | |
| 24 | 90110–06182 | BOLT, HEXAGON SOCKET HEAD | 1 | 1 | | | | |
| 25 | 99530–10114 | PIN, DOWEL | 2 | 2 | | | | |
| 26 | 6ET–15362–00 | PLUG, OIL LEVEL | 1 | 1 | | | | |
| 27 | 93210–06632 | .O-RING | 1 | 1 | | | | |

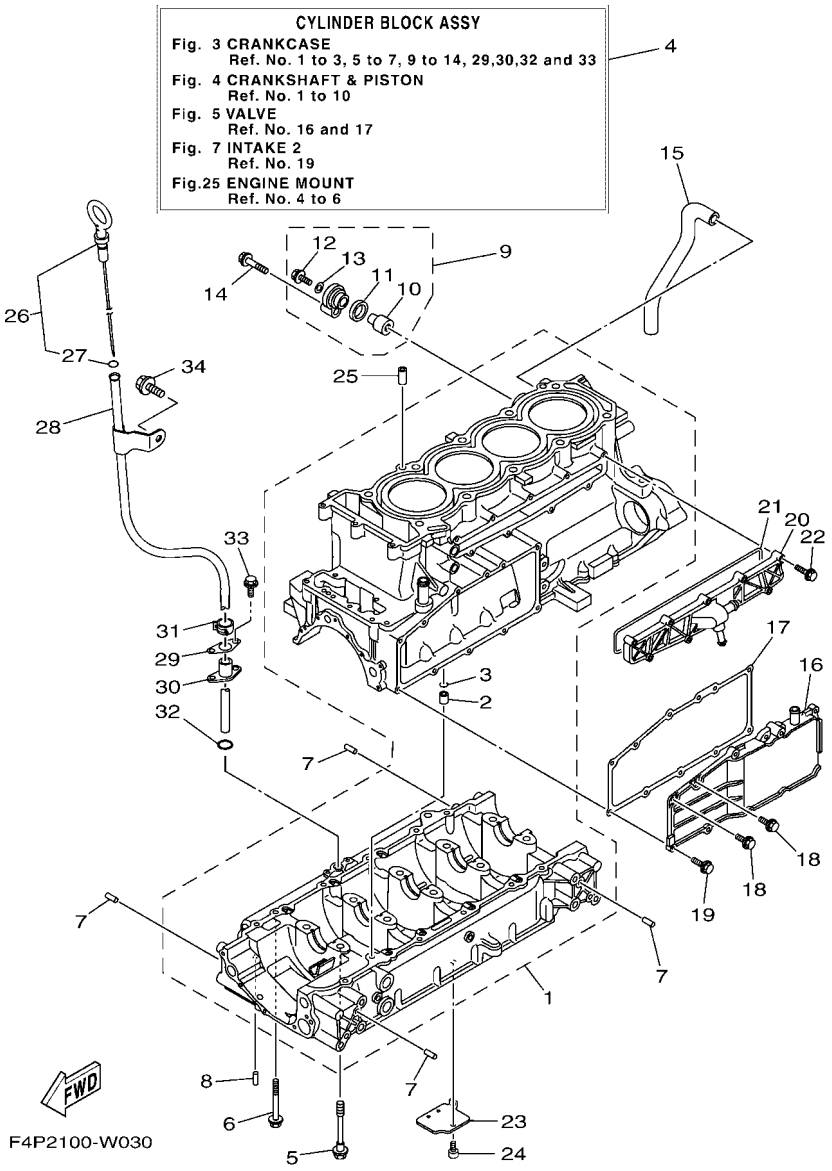


## FIG. 3 CRANKCASE

| REF. NO. | PART NO. | DESCRIPTION | CAN | EUR | | | | REMARKS |
|---|---|---|---|---|---|---|---|---|
| 28 | 6JC–8572F–00 | PIPE, OIL LEVEL | 1 | 1 | | | | |
| 29 | 6BH–1319K–00 | PLATE | 1 | 1 | | | | |
| 30 | 6CS–85516–00 | SPACER | 1 | 1 | | | | |
| 31 | 90467–150A1 | CLIP | 1 | 1 | | | | |
| 32 | 93210–12016 | O-RING | 1 | 1 | | | | |
| 33 | 90109–06268 | BOLT | 2 | 2 | | | | |
| 34 | 90105–08021 | BOLT, FLANGE | 1 | 1 | | | | |

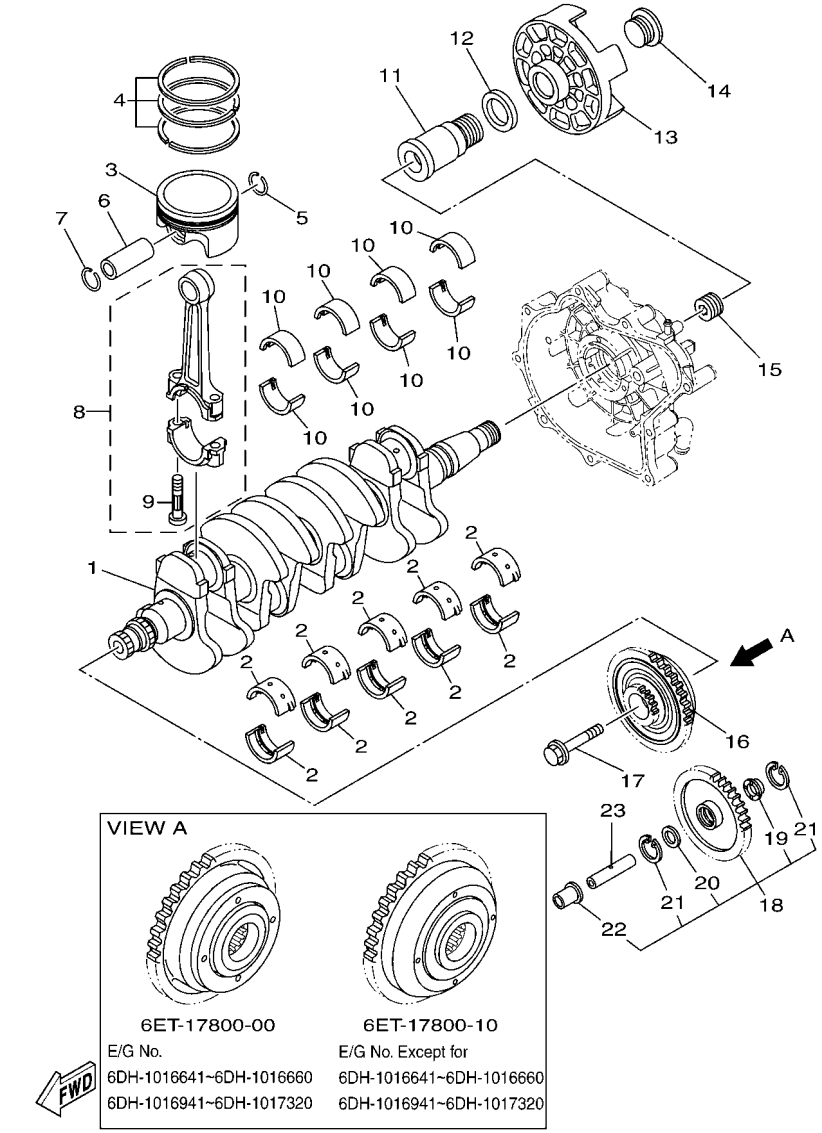


## FIG. 4 CRANKSHAFT & PISTON

| REF. NO. | PART NO. | DESCRIPTION | CAN | EUR | | | | REMARKS |
|---|---|---|---|---|---|---|---|---|
| 1 | 6ET–11411–00 | CRANKSHAFT | 1 | 1 | | | | |
| 2 | 6S5–11416–00 | PLANE BEARING, CRANKSHAFT 1 | 10 | 10 | | | | UR BROWN |
| | 6S5–11416–10 | PLANE BEARING, CRANKSHAFT 1 | 10 | 10 | | | | UR BLACK |
| | 6S5–11416–20 | PLANE BEARING, CRANKSHAFT 1 | 10 | 10 | | | | UR BLUE |
| | 6S5–11416–30 | PLANE BEARING, CRANKSHAFT 1 | 10 | 10 | | | | UR GREEN |
| | 6S5–11416–40 | PLANE BEARING, CRANKSHAFT 1 | 10 | 10 | | | | UR YELLOW |
| 3 | 6ET–11631–01–B0 | PISTON (STD) | 4 | 4 | | | | |
| 4 | 6S5–11603–00 | PISTON RING SET (STD) | 4 | 4 | | | | |
| 5 | 93450–22174 | CIRCLIP | 4 | 4 | | | | |
| 6 | 6ET–11633–00 | PIN, PISTON | 4 | 4 | | | | |
| 7 | 93450–22174 | CIRCLIP | 4 | 4 | | | | |
| 8 | 6S5–11650–10 | CONNECTING ROD ASSY | 4 | 4 | | | | |
| 9 | 6S5–11654–10 | .BOLT, CONNECTING ROD | 2 | 2 | | | | |
| 10 | 6S5–11656–40 | PLANE BEARING, CONNECTING ROD | 8 | 8 | | | | UR BLUE |
| | 6S5–11656–50 | PLANE BEARING, CONNECTING ROD | 8 | 8 | | | | UR BLACK |
| | 6S5–11656–60 | PLANE BEARING, CONNECTING ROD | 8 | 8 | | | | UR BROWN |
| | 6S5–11656–70 | PLANE BEARING, CONNECTING ROD | 8 | 8 | | | | UR GREEN |
| 11 | 6S5–17572–01 | SHAFT, TRANSFER | 1 | 1 | | | | |
| 12 | 6S5–12289–00 | WASHER | 1 | 1 | | | | |
| 13 | 6S5–45813–01–94 | FLANGE, COUPLING | 1 | 1 | | | | |
| 14 | 6S5–17525–01 | HOLDER 2 | 1 | 1 | | | | |
| 15 | 6S5–11459–01 | NUT, SPECIAL | 1 | 1 | | | | |
| 16 | 6ET–17800–10 | GEAR UNIT ASSY | 1 | 1 | | | | UR |
| | 6ET–17800–00 | GEAR UNIT ASSY | 1 | 1 | | | | UR |
| 17 | 6S5–17031–00 | BOLT | 1 | 1 | | | | |
| 18 | 6S5–W1783–20 | DRIVE GEAR & COLLAR SET (18T) | 1 | 1 | | | | |
| 19 | 6S5–17529–00 | .WASHER, THRUST | 1 | 1 | | | | |

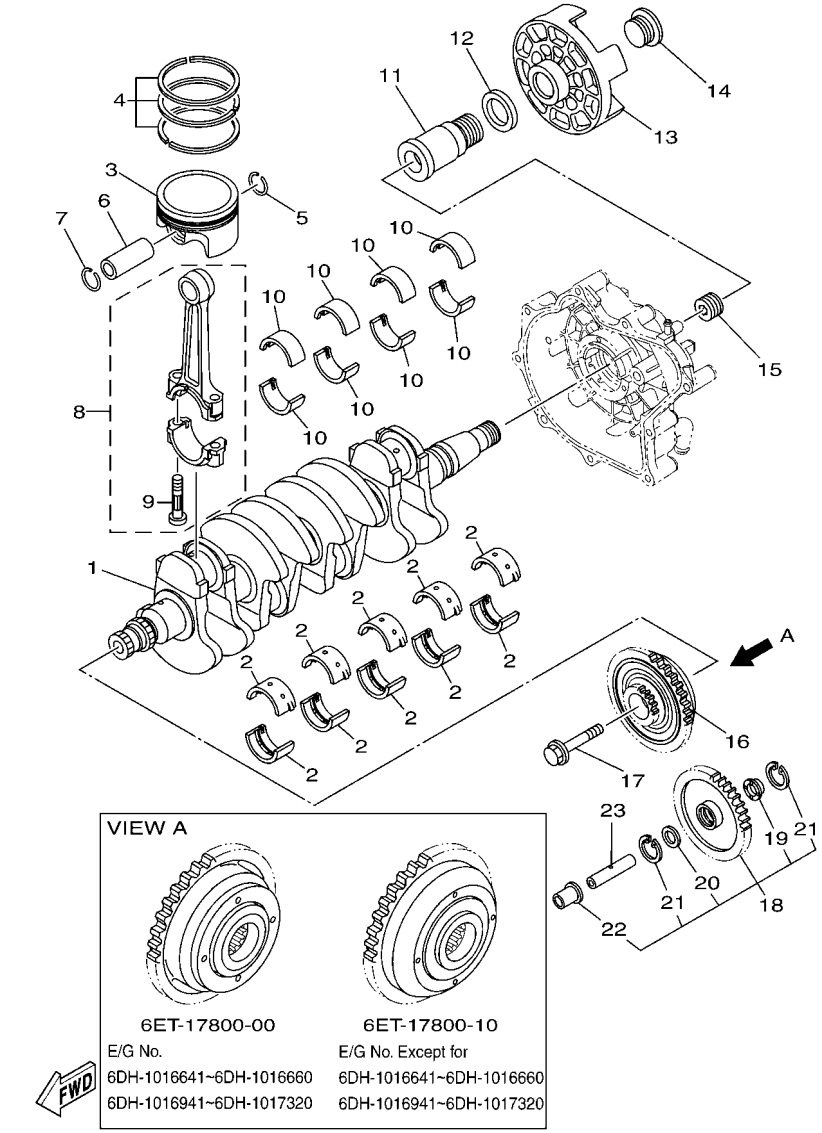


F4P1100-W040

## FIG. 4 CRANKSHAFT & PISTON

| REF. NO. | PART NO. | DESCRIPTION | CAN | EUR | | | | REMARKS |
|---|---|---|---|---|---|---|---|---|
| 20 | 90201–132G5 | .WASHER, PLATE | 1 | 1 | | | | |
| 21 | 99009–24700 | .CIRCLIP | 2 | 2 | | | | |
| 22 | 6S5–17585–10 | .COLLAR, GEAR | 1 | 1 | | | | |
| 23 | 6S5–17553–00 | SHAFT, MIDDLE DRIVEN | 1 | 1 | | | | |

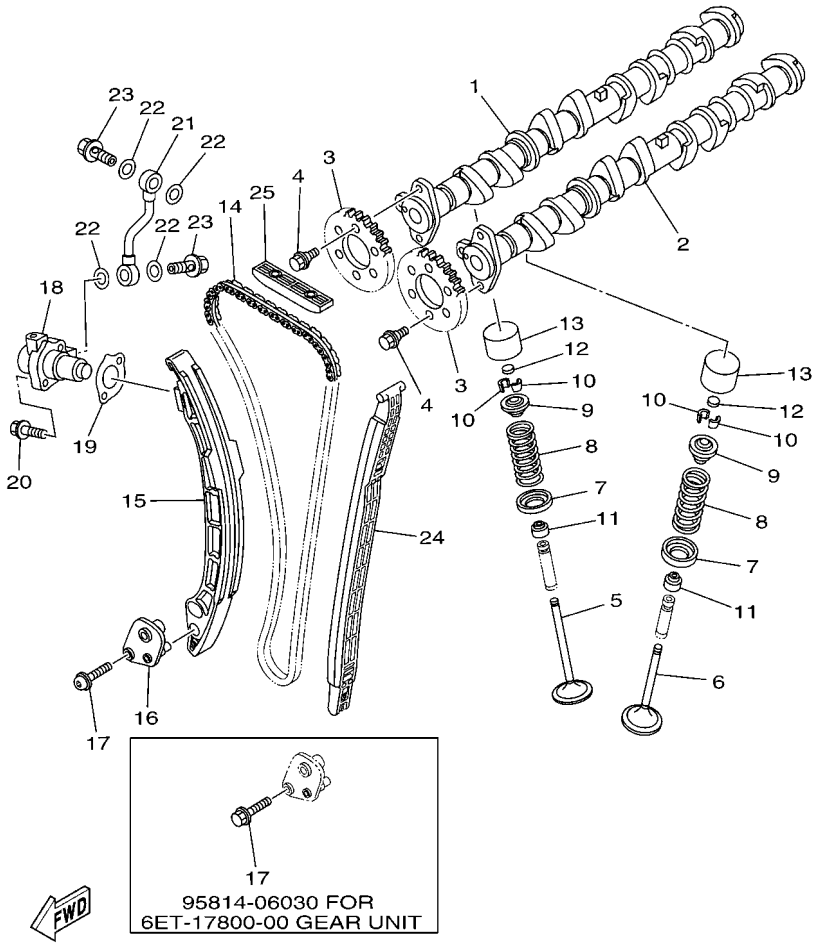


F4P1100-W050

## FIG. 5 VALVE

| REF. NO. | PART NO. | DESCRIPTION | CAN | EUR | | | | REMARKS |
|---|---|---|---|---|---|---|---|---|
| 1 | 6S5–12171–10 | CAMSHAFT 1 | 1 | 1 | | | | |
| 2 | 6ET–12181–00 | CAMSHAFT 2 | 1 | 1 | | | | |
| 3 | 6ET–12176–00 | SPROCKET, CAM CHAIN | 2 | 2 | | | | |
| 4 | 90105–07006 | BOLT, FLANGE | 4 | 4 | | | | |
| 5 | 6S5–12111–00 | VALVE, INTAKE | 8 | 8 | | | | |
| 6 | 6S5–12121–00 | VALVE, EXHAUST | 8 | 8 | | | | |
| 7 | 6S5–12116–00 | SEAT, VALVE SPRING | 16 | 16 | | | | |
| 8 | 6S5–12113–00 | SPRING, VALVE INNER | 16 | 16 | | | | |
| 9 | 6S5–12117–00 | RETAINER, VALVE SPRING | 16 | 16 | | | | |
| 10 | 3LD–12118–00 | LOCK, VALVE SPRING RETAINER | 32 | 32 | | | | |
| 11 | 51Y–12119–00 | SEAL, VALVE STEM | 16 | 16 | | | | |
| 12 | 3LD–12168–00 | PAD, ADJUSTING (1.20) | 16 | 16 | | | | UR |
| | 3LD–12168–20 | PAD, ADJUSTING (1.25) | 16 | 16 | | | | UR |
| | 3LD–12168–40 | PAD, ADJUSTING (1.30) | 16 | 16 | | | | UR |
| | 3LD–12168–60 | PAD, ADJUSTING (1.35) | 16 | 16 | | | | UR |
| | 3LD–12168–80 | PAD, ADJUSTING (1.40) | 16 | 16 | | | | UR |
| | 3LD–12168–A0 | PAD, ADJUSTING (1.45) | 16 | 16 | | | | UR |
| | 3LD–12168–F0 | PAD, ADJUSTING (1.50) | 16 | 16 | | | | UR |
| | 3LD–12168–H1 | PAD, ADJUSTING (1.55) | 16 | 16 | | | | UR |
| | 3LD–12168–K1 | PAD, ADJUSTING (1.60) | 16 | 16 | | | | UR |
| | 3LD–12168–M1 | PAD, ADJUSTING (1.65) | 16 | 16 | | | | UR |
| | 3LD–12168–R1 | PAD, ADJUSTING (1.70) | 16 | 16 | | | | UR |
| | 3LD–12168–U1 | PAD, ADJUSTING (1.75) | 16 | 16 | | | | UR |
| | 3LD–12168–W1 | PAD, ADJUSTING (1.80) | 16 | 16 | | | | UR |
| | 3LD–12168–Y1 | PAD, ADJUSTING (1.85) | 16 | 16 | | | | UR |
| | 3LD–12169–11 | PAD, ADJUSTING (1.90) | 16 | 16 | | | | UR |
| | 3LD–12169–31 | PAD, ADJUSTING (1.95) | 16 | 16 | | | | UR |

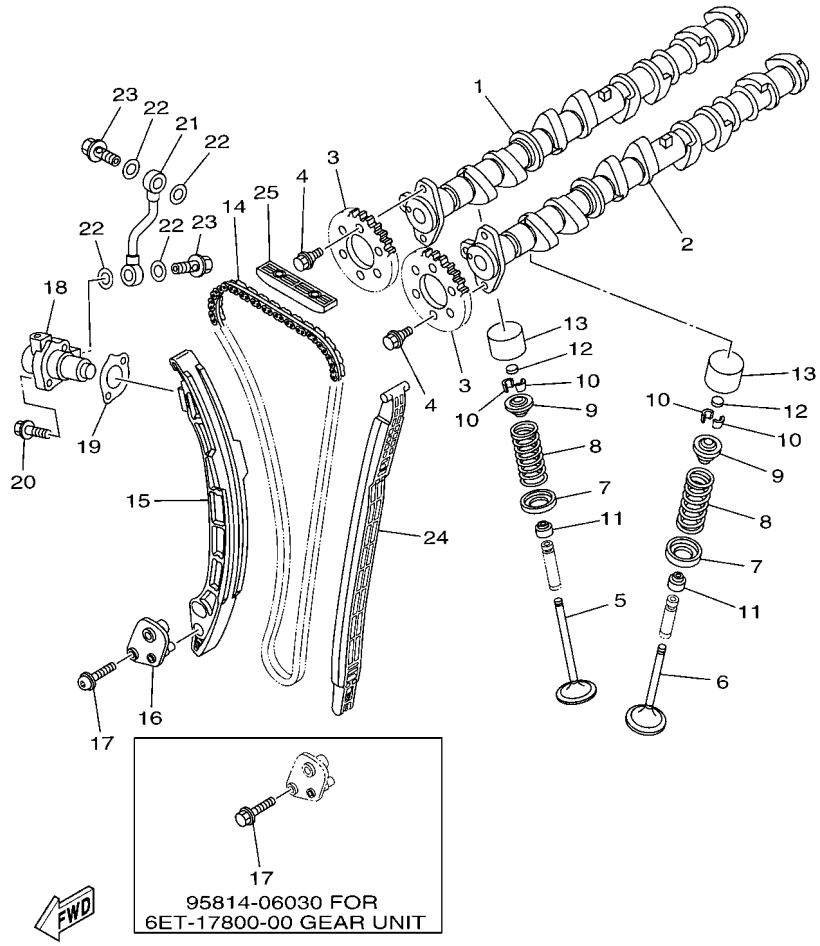


F4P1100-W050

## FIG. 5 VALVE

| REF. NO. | PART NO. | DESCRIPTION | CAN | EUR | | | | REMARKS |
|---|---|---|---|---|---|---|---|---|
| 12 | 3LD–12169–50 | PAD, ADJUSTING (2.00) | 16 | 16 | | | | UR |
| | 3LD–12169–70 | PAD, ADJUSTING (2.05) | 16 | 16 | | | | UR |
| | 3LD–12169–90 | PAD, ADJUSTING (2.10) | 16 | 16 | | | | UR |
| | 3LD–12169–E0 | PAD, ADJUSTING (2.15) | 16 | 16 | | | | UR |
| | 3LD–12169–G0 | PAD, ADJUSTING (2.20) | 16 | 16 | | | | UR |
| | 3LD–12169–J0 | PAD, ADJUSTING (2.25) | 16 | 16 | | | | UR |
| | 3LD–12169–L0 | PAD, ADJUSTING (2.30) | 16 | 16 | | | | UR |
| 13 | 6S5–12153–00 | LIFTER, VALVE | 16 | 16 | | | | |
| 14 | 94591–74152 | CHAIN | 1 | 1 | | | | |
| 15 | 6ET–12252–00 | DAMPER, CHAIN 2 | 1 | 1 | | | | |
| 16 | 6BH–12279–00 | PLATE | 1 | 1 | | | | |
| 17 | 92014–06030 | BOLT, BUTTON HEAD | 2 | 2 | | | | UR FOR 6ET-17800-10 GEAR UNIT |
| | 95814–06030 | BOLT, FLANGE | 2 | 2 | | | | UR FOR 6ET-17800-00 GEAR UNIT |
| 18 | 6S5–12210–01 | TENSIONER ASSY, CAM CHAIN | 1 | 1 | | | | |
| 19 | 6S5–121E2–00 | GASKET | 1 | 1 | | | | |
| 20 | 91380–06025 | BOLT | 2 | 2 | | | | |
| 21 | 6S5–13418–00 | PIPE, OIL 2 | 1 | 1 | | | | |
| 22 | 90430–10007 | GASKET | 4 | 4 | | | | |
| 23 | 90401–10040 | BOLT, UNION | 2 | 2 | | | | |
| 24 | 6ET–12251–00 | DAMPER, CHAIN 1 | 1 | 1 | | | | |
| 25 | 6BH–12241–00 | GUIDE, STOPPER 2 | 1 | 1 | | | | |

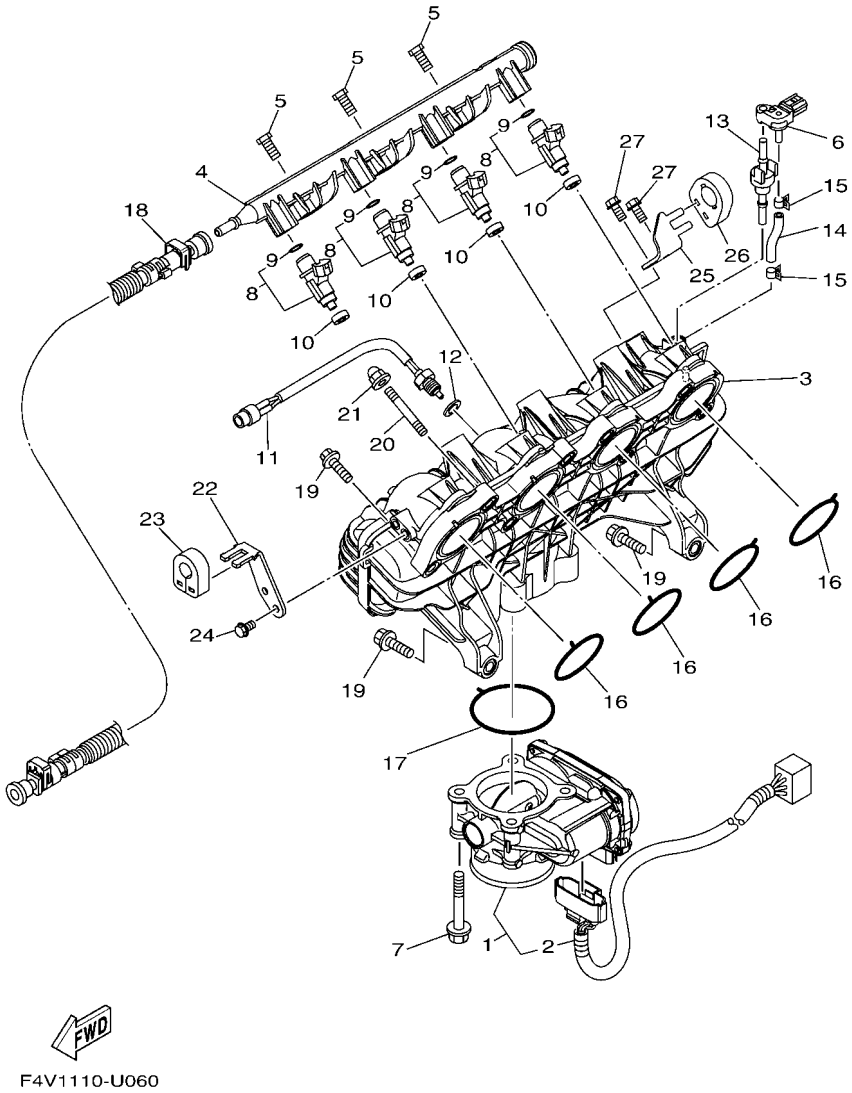


## FIG. 6 INTAKE 1

| REF. NO. | PART NO. | DESCRIPTION | CAN | EUR | | | | REMARKS |
|---|---|---|---|---|---|---|---|---|
| 1 | 6ET–13750–00 | THROTTLE BODY ASSY | 1 | 1 | | | | |
| 2 | 6S5–82509–00 | .WIRE, SUB LEAD | 1 | 1 | | | | |
| 3 | 6ET–13641–10 | MANIFOLD, INTAKE 1 | 1 | 1 | | | | |
| 4 | 6CS–12880–00 | DELIVERY PIPE | 1 | 1 | | | | |
| 5 | 6CS–14446–00 | BOLT | 3 | 3 | | | | |
| 6 | 6BH–82380–00 | SENSOR, PRESSURE | 1 | 1 | | | | |
| 7 | 90105–08243 | BOLT, FLANGE | 4 | 4 | | | | |
| 8 | 6ET–13761–00 | INJECTOR | 4 | 4 | | | | |
| 9 | 68V–1416A–00 | .O-RING | 1 | 1 | | | | |
| 10 | 8FP–13556–10 | GASKET, MANIFOLD | 4 | 4 | | | | |
| 11 | 6S5–85886–00 | SENSOR, AIR TEMPERATURE | 1 | 1 | | | | |
| 12 | 6S5–14285–00 | WASHER | 1 | 1 | | | | |
| 13 | 6BH–14445–00 | GROMMET | 2 | 2 | | | | |
| 14 | 6S5–13532–00 | HOSE, VACUUM SENSING 3 | 1 | 1 | | | | |
| 15 | 6S5–14159–00 | CLIP | 2 | 2 | | | | |
| 16 | 6ET–14156–00 | GASKET, INSULATING | 4 | 4 | | | | |
| 17 | 6EY–14156–00 | GASKET, INSULATING | 1 | 1 | | | | |
| 18 | 6AN–2450B–10 | FUEL HOSE ASSY | 1 | 1 | | | | |
| 19 | 97513–08535 | BOLT, WITH WASHER | 8 | 8 | | | | |
| 20 | 90116–08032 | BOLT, STUD | 2 | 2 | | | | |
| 21 | 90176–08080 | NUT, CROWN | 2 | 2 | | | | |
| 22 | 6ET–14572–00 | PLATE, STAY | 1 | 1 | | | | |
| 23 | 6CS–14445–00 | GROMMET | 1 | 1 | | | | |
| 24 | 95023–06012 | BOLT | 2 | 2 | | | | |
| 25 | 6CS–14572–00 | PLATE, STAY | 1 | 1 | | | | |
| 26 | 6ET–14445–00 | GROMMET | 1 | 1 | | | | |
| 27 | 95023–06012 | BOLT | 2 | 2 | | | | |

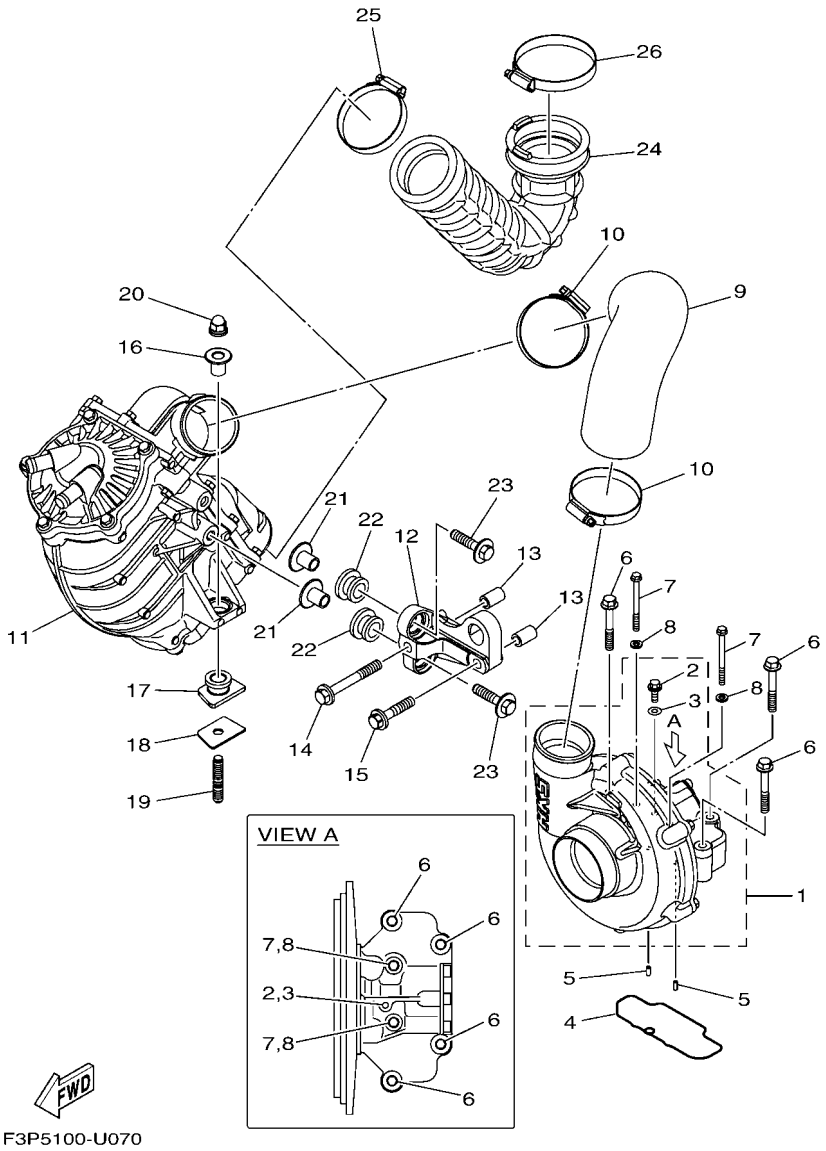


F3P5100-U070

## FIG. 7 INTAKE 2

| REF. NO. | PART NO. | DESCRIPTION | CAN | EUR | | | | REMARKS |
|---|---|---|---|---|---|---|---|---|
| 1 | 6HL–141A0–00 | SUPER CHARGER ASSY | 1 | 1 | | | | |
| 2 | 90105–05020 | .BOLT, FLANGE | 1 | 1 | | | | |
| 3 | 6S5–14199–00 | .GASKET | 1 | 1 | | | | |
| 4 | 6S5–1416A–00 | O-RING | 1 | 1 | | | | |
| 5 | 93604–10M03 | PIN, DOWEL | 2 | 2 | | | | |
| 6 | 95814–08055 | BOLT, FLANGE | 4 | 4 | | | | |
| 7 | 95024–06065 | BOLT, FLANGE (SMALL HEAD) | 2 | 2 | | | | |
| 8 | 90201–06028 | WASHER, PLATE | 2 | 2 | | | | |
| 9 | 6HL–14349–00 | PIPE | 1 | 1 | | | | |
| 10 | 90450–75003 | HOSE CLAMP ASSY | 2 | 2 | | | | |
| 11 | 6HL–13670–00 | AIR COOLER ASSY. | 1 | 1 | | | | |
| 12 | 6S5–13691–12 | BRACKET, AIR COOLER | 1 | 1 | | | | |
| 13 | 99590–14016 | PIN, DOWEL | 2 | 2 | | | | |
| 14 | 90119–10047 | BOLT, WITH WASHER | 1 | 1 | | | | |
| 15 | 90119–10046 | BOLT, WITH WASHER | 1 | 1 | | | | |
| 16 | 90387–11007 | COLLAR | 1 | 1 | | | | |
| 17 | 6S5–14435–00 | GROMMET | 1 | 1 | | | | |
| 18 | 6S5–14243–01 | PLATE | 1 | 1 | | | | |
| 19 | 90116–10044 | BOLT, STUD | 1 | 1 | | | | |
| 20 | 90176–10001 | NUT, CROWN | 1 | 1 | | | | |
| 21 | 90387–11008 | COLLAR | 2 | 2 | | | | |
| 22 | 90480–21M63 | GROMMET | 2 | 2 | | | | |
| 23 | 90119–10011 | BOLT, WITH WASHER | 2 | 2 | | | | |
| 24 | 6HL–13651–00 | PIPE, BOOST | 1 | 1 | | | | |
| 25 | 90450–75003 | HOSE CLAMP ASSY | 1 | 1 | | | | |
| 26 | 90450–90002 | HOSE CLAMP ASSY | 1 | 1 | | | | |

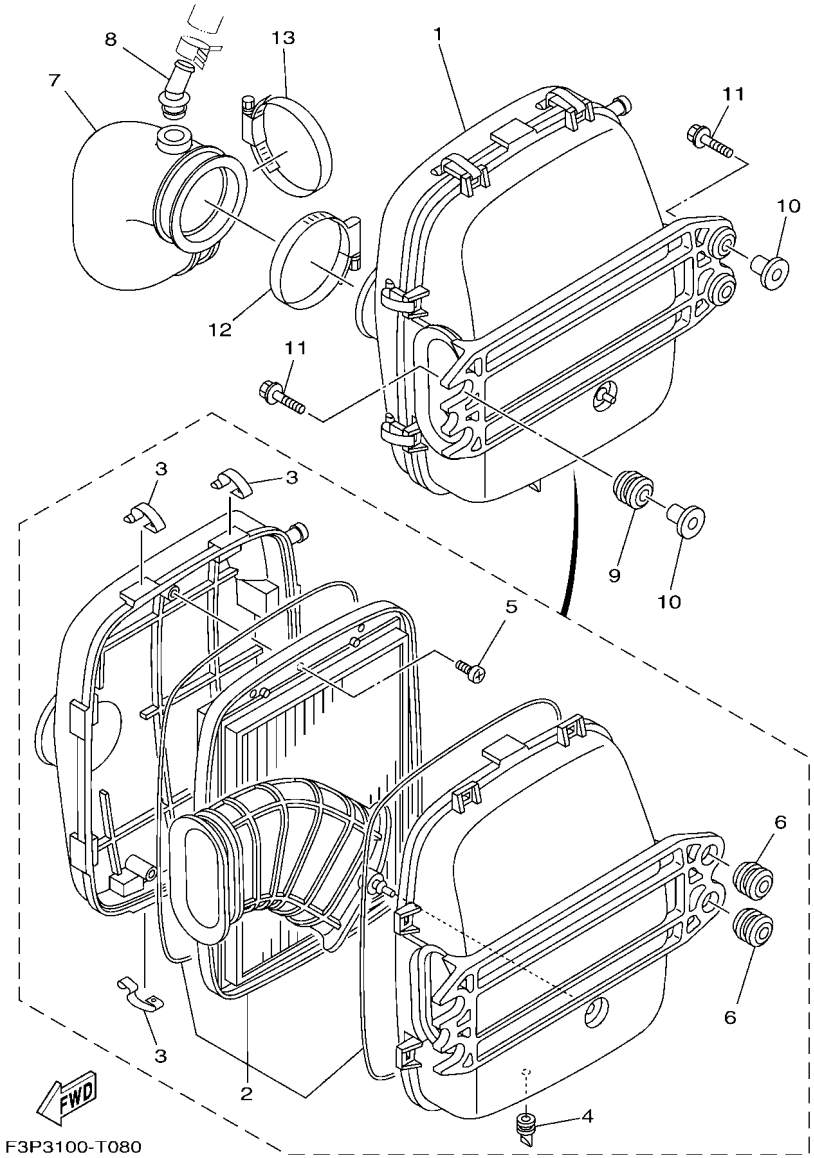


## FIG. 8 INTAKE 3

| REF. NO. | PART NO. | DESCRIPTION | CAN | EUR | | | | REMARKS |
|---|---|---|---|---|---|---|---|---|
| 1 | 6S5–E4410–02 | AIR CLEANER ASSY. | 1 | 1 | | | | |
| 2 | 6S5–E4451–01 | .ELEMENT, AIR CLEANER | 1 | 1 | | | | |
| 3 | 6S5–E4436–00 | .HOOK | 8 | 8 | | | | |
| 4 | 6S5–G2717–00 | .RUBBER, SEAL 2 | 1 | 1 | | | | |
| 5 | 97780–60516 | .SCREW, TAPPING | 3 | 3 | | | | |
| 6 | 90480–22801 | .GROMMET | 2 | 2 | | | | |
| 7 | 6S5–E4419–00 | PIPE | 1 | 1 | | | | |
| 8 | 6S5–R1142–10 | CONNECTION | 1 | 1 | | | | |
| 9 | 90480–22M15 | GROMMET | 2 | 2 | | | | |
| 10 | 90387–08M37 | COLLAR | 4 | 4 | | | | |
| 11 | 90119–08187 | BOLT, WITH WASHER | 4 | 4 | | | | |
| 12 | 90450–90002 | HOSE CLAMP ASSY | 1 | 1 | | | | |
| 13 | 90450–90002 | HOSE CLAMP ASSY | 1 | 1 | | | | |

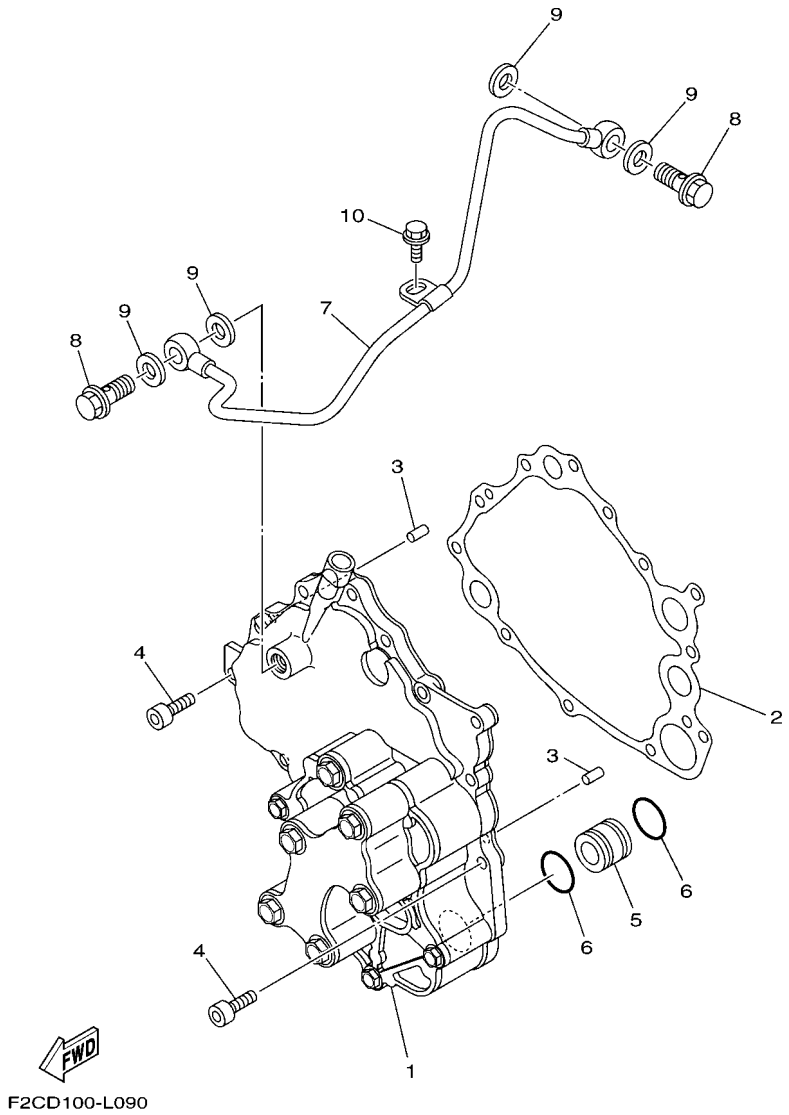


## FIG. 9 OIL PUMP

| REF. NO. | PART NO. | DESCRIPTION | CAN | EUR | | | | REMARKS |
|---|---|---|---|---|---|---|---|---|
| 1 | 6S5–13300–22 | OIL PUMP ASSY | 1 | 1 | | | | |
| 2 | 6S5–13563–00 | GASKET | 1 | 1 | | | | |
| 3 | 93606–12019 | PIN, DOWEL | 2 | 2 | | | | |
| 4 | 90110–06404 | BOLT, HEXAGON SOCKET HEAD | 12 | 12 | | | | |
| 5 | 6S5–13446–10 | CONNECTOR | 1 | 1 | | | | |
| 6 | 93210–21631 | O-RING | 2 | 2 | | | | |
| 7 | 6HL–13416–00 | PIPE, OIL 1 | 1 | 1 | | | | |
| 8 | 90401–10040 | BOLT, UNION | 2 | 2 | | | | |
| 9 | 90430–10007 | GASKET | 4 | 4 | | | | |
| 10 | 95023–06012 | BOLT | 1 | 1 | | | | |

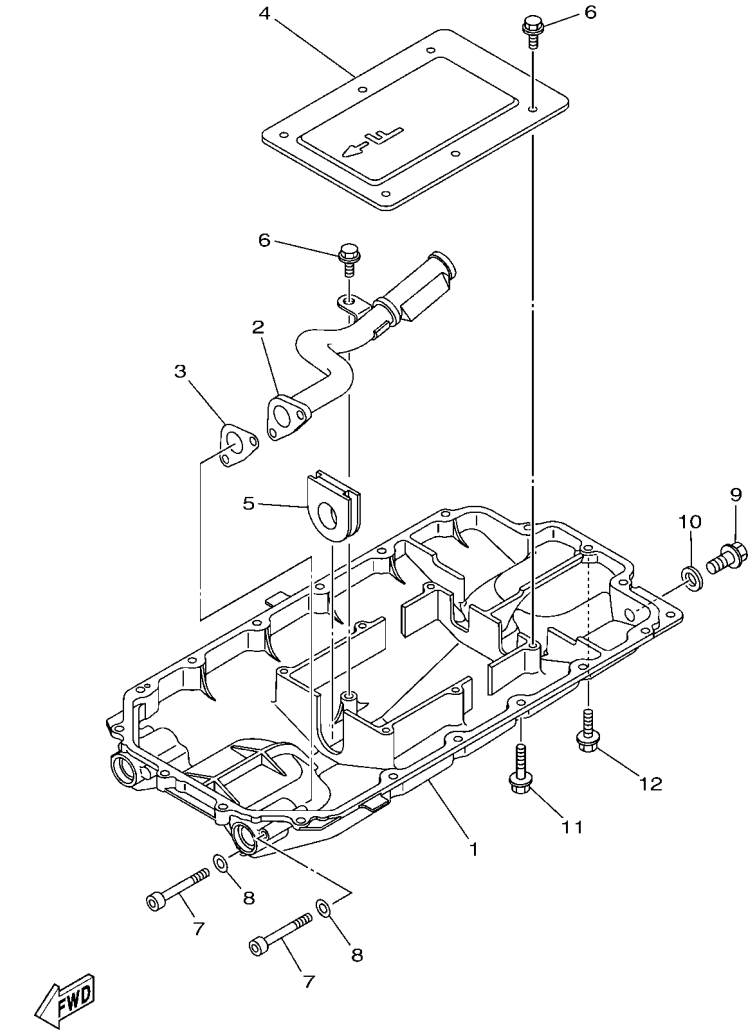

F2W1100-P090

## FIG. 10 OIL PAN

| REF. NO. | PART NO. | DESCRIPTION | CAN | EUR | | | | REMARKS |
|---|---|---|---|---|---|---|---|---|
| 1 | 6S5–1310A–25 | PAN, OIL | 1 | 1 | | | | |
| 2 | 6S5–13405–11 | OIL PIPE COMP. 1 | 1 | 1 | | | | |
| 3 | 6S5–13477–00 | GASKET | 1 | 1 | | | | |
| 4 | 6S5–13317–10 | PLATE, BAFFLE | 1 | 1 | | | | |
| 5 | 6S5–15486–10 | GROMMET | 1 | 1 | | | | |
| 6 | 95817–06014 | BOLT, FLANGE | 7 | 7 | | | | |
| 7 | 91314–06060 | BOLT, HEXAGON SOCKET HEAD | 2 | 2 | | | | |
| 8 | 90201–06028 | WASHER, PLATE | 2 | 2 | | | | |
| 9 | 95814–08020 | BOLT, FLANGE | 1 | 1 | | | | |
| 10 | 90430–08209 | GASKET | 1 | 1 | | | | |
| 11 | 95024–06035 | BOLT, FLANGE (SMALL HEAD) | 17 | 17 | | | | |
| 12 | 95024–06020 | BOLT, FLANGE (SMALL HEAD) | 1 | 1 | | | | |

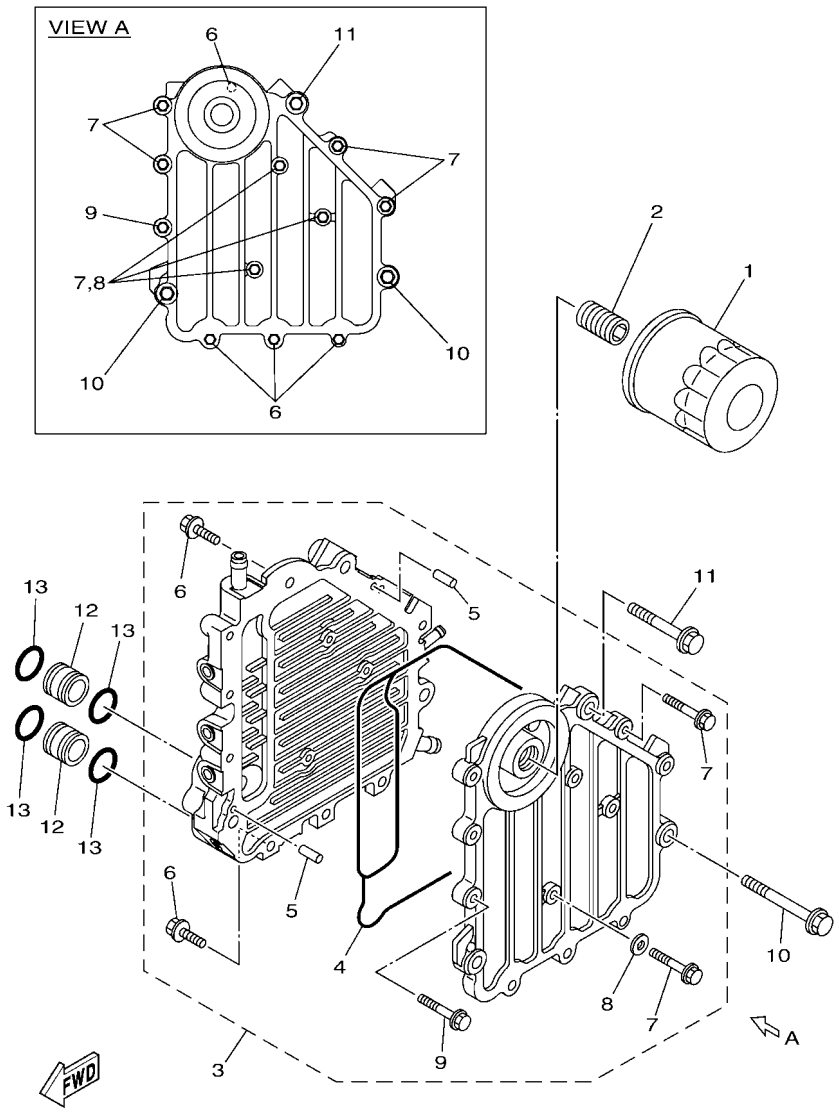


F4B1110-S110

## FIG. 11 OIL COOLER

| REF. NO. | PART NO. | DESCRIPTION | CAN | EUR | | | | REMARKS |
|---|---|---|---|---|---|---|---|---|
| 1 | 69J–13440–04 | ELEMENT ASSY, OIL CLEANER | 1 | 1 | | | | |
| 2 | 6S5–12858–00 | BOLT, UNION | 1 | 1 | | | | |
| 3 | 6BH–13470–30 | OIL COOLER ASSY | 1 | 1 | | | | |
| 4 | 6BH–13556–00 | .GASKET, MANIFOLD | 1 | 1 | | | | |
| 5 | 93604–10M03 | .PIN, DOWEL | 2 | 2 | | | | |
| 6 | 90105–06184 | .BOLT, FLANGE | 4 | 4 | | | | |
| 7 | 90105–06185 | .BOLT, FLANGE | 7 | 7 | | | | |
| 8 | 90430–06232 | .GASKET | 3 | 3 | | | | |
| 9 | 90105–08054 | .BOLT, FLANGE | 1 | 1 | | | | |
| 10 | 90105–08169 | BOLT, FLANGE | 2 | 2 | | | | |
| 11 | 90105–08170 | BOLT, FLANGE | 1 | 1 | | | | |
| 12 | 60E–13446–00 | CONNECTOR | 2 | 2 | | | | |
| 13 | 93210–18322 | O-RING | 4 | 4 | | | | |

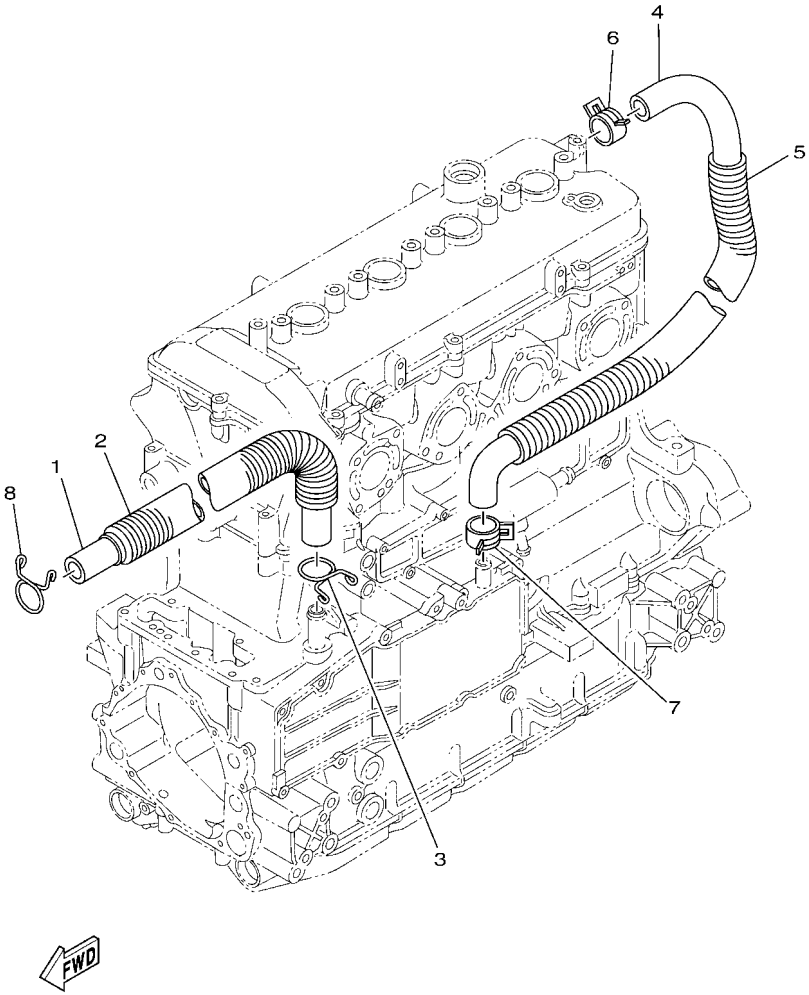


## FIG. 12 BREATHER OIL

| REF. NO. | PART NO. | DESCRIPTION | CAN | EUR | | | | REMARKS |
|---|---|---|---|---|---|---|---|---|
| 1 | 6S5–11166–10 | PIPE, BREATHER 1 | 1 | 1 | | | | |
| 2 | 90447–22015 | TUBE (L410) | 1 | 1 | | | | |
| 3 | 90467–190A0 | CLIP | 1 | 1 | | | | |
| 4 | 6S5–11167–10 | PIPE, BREATHER 2 | 1 | 1 | | | | |
| 5 | 90447–22016 | TUBE (L490) | 1 | 1 | | | | |
| 6 | 90467–240A0 | CLIP | 1 | 1 | | | | |
| 7 | 90467–200A3 | CLIP | 1 | 1 | | | | |
| 8 | 90467–190A0 | CLIP | 1 | 1 | | | | |

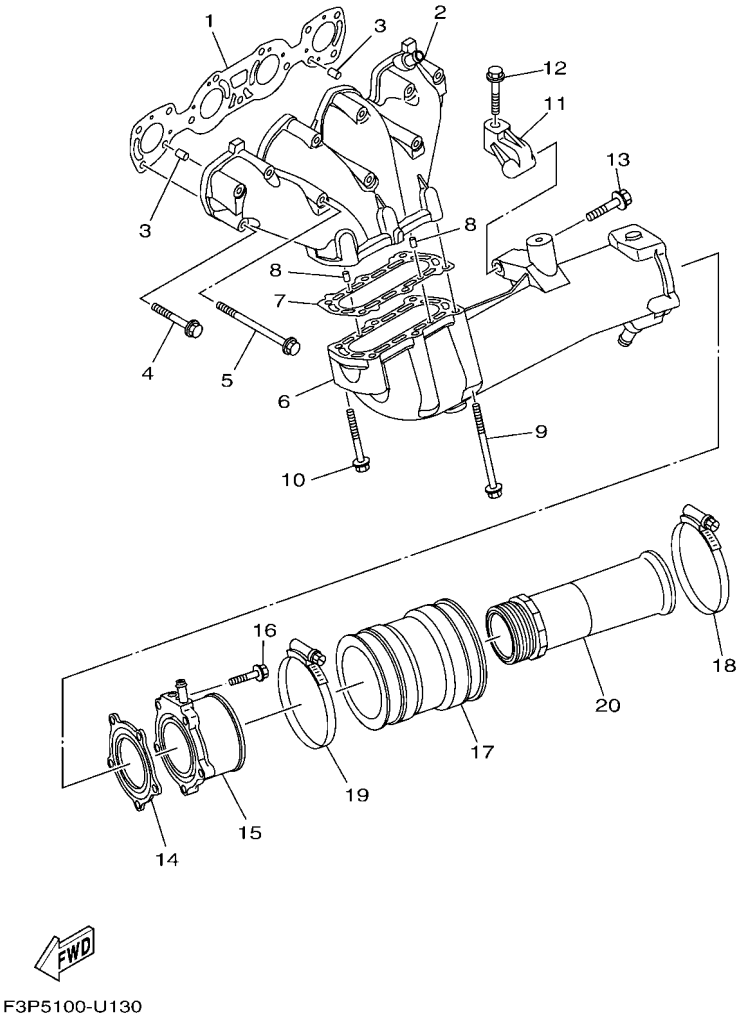


## FIG. 13 EXHAUST 1

| REF. NO. | PART NO. | DESCRIPTION | CAN | EUR | | | | REMARKS |
|---|---|---|---|---|---|---|---|---|
| 1 | 6ET–14613–00 | GASKET, EXHAUST PIPE | 1 | 1 | | | | |
| 2 | 6BH–14711–11 | MUFFLER 1 | 1 | 1 | | | | |
| 3 | 93608–16M16 | PIN, DOWEL | 2 | 2 | | | | |
| 4 | 90119–08034 | BOLT, WITH WASHER | 8 | 8 | | | | |
| 5 | 90119–08097 | BOLT, WITH WASHER | 3 | 3 | | | | |
| 6 | 6BH–14721–11 | MUFFLER 2 | 1 | 1 | | | | |
| 7 | 6S5–14739–00 | GASKET, MUFFLER DAMPER 1 | 1 | 1 | | | | |
| 8 | 93606–12019 | PIN, DOWEL | 2 | 2 | | | | |
| 9 | 90119–08097 | BOLT, WITH WASHER | 4 | 4 | | | | |
| 10 | 90119–08034 | BOLT, WITH WASHER | 2 | 2 | | | | |
| 11 | 6S5–14771–00 | STAY, MUFFLER 1 | 1 | 1 | | | | |
| 12 | 90119–08096 | BOLT, WITH WASHER | 1 | 1 | | | | |
| 13 | 90119–10029 | BOLT, WITH WASHER | 1 | 1 | | | | |
| 14 | 6BH–14749–00 | GASKET, MUFFLER DAMPER 2 | 1 | 1 | | | | |
| 15 | 6BH–14784–01 | PIPE, TAIL | 1 | 1 | | | | |
| 16 | 95024–08035 | BOLT, FLANGE (SMALL HEAD) | 5 | 5 | | | | |
| 17 | 6S5–E4752–00 | PIPE, OUTLET | 1 | 1 | | | | |
| 18 | 90450–99808 | HOSE CLAMP ASSY | 1 | 1 | | | | |
| 19 | 90450–99809 | HOSE CLAMP ASSY | 1 | 1 | | | | |
| 20 | 6CS–1475A–00 | PIPE 1 | 1 | 1 | | | | |

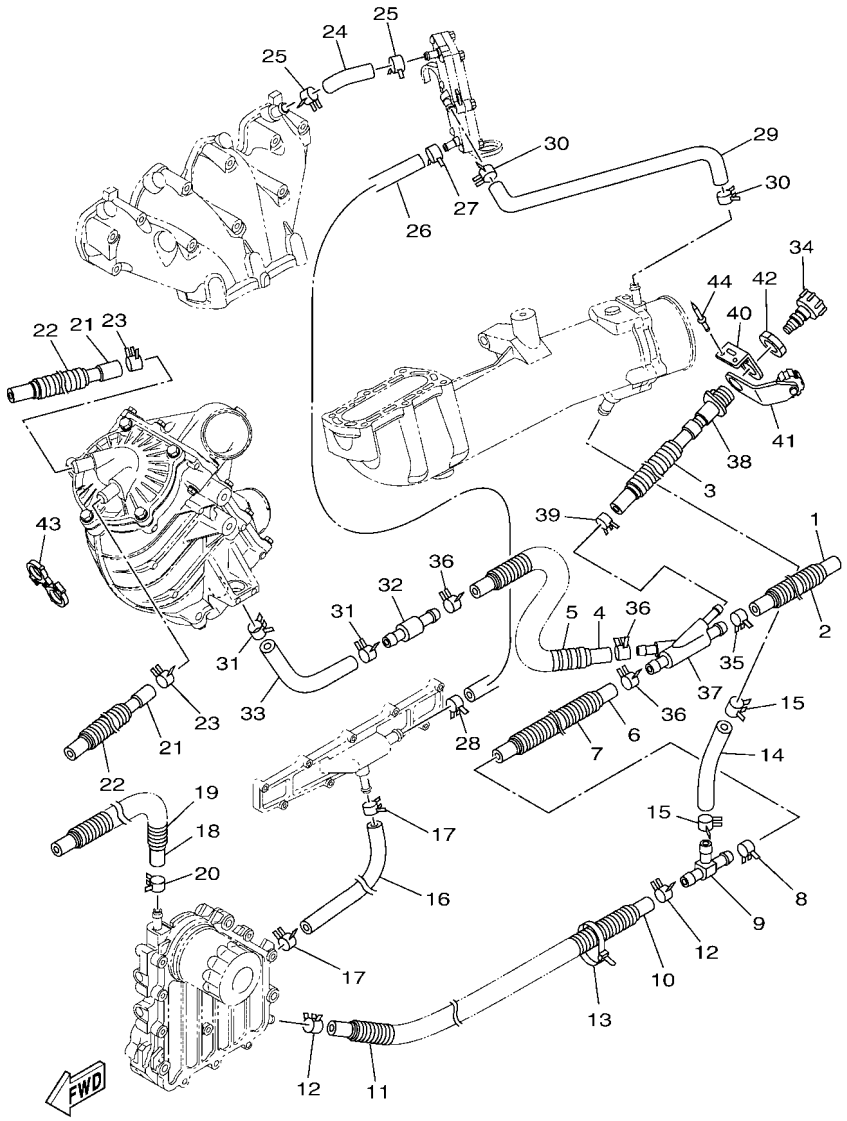


F3P3100-T140

## FIG. 14 EXHAUST 2

| REF. NO. | PART NO. | DESCRIPTION | CAN | EUR | | | | REMARKS |
|---|---|---|---|---|---|---|---|---|
| 1 | 90445–21806 | HOSE (L250) | 1 | 1 | | | | |
| 2 | 90447–22801 | TUBE (L200) | 1 | 1 | | | | |
| 3 | 90447–19801 | TUBE (L485) | 1 | 1 | | | | |
| 4 | 90445–21807 | HOSE (L970) | 1 | 1 | | | | |
| 5 | 90447–22802 | TUBE (L850) | 1 | 1 | | | | |
| 6 | 6S5–1243E–01 | HOSE 2 | 1 | 1 | | | | |
| 7 | F2T–U773D–00 | TUBE | 1 | 1 | | | | |
| 8 | 90467–200A3 | CLIP | 1 | 1 | | | | |
| 9 | 6BH–12584–00 | JOINT, HOSE 3 | 1 | 1 | | | | |
| 10 | 90445–18012 | HOSE (L400) | 1 | 1 | | | | |
| 11 | 90447–19005 | TUBE (L260) | 1 | 1 | | | | |
| 12 | 90467–160A0 | CLIP | 2 | 2 | | | | |
| 13 | 90464–35132 | CLAMP | 1 | 1 | | | | |
| 14 | 6S5–12589–01 | HOSE 6 | 1 | 1 | | | | |
| 15 | 90467–200A3 | CLIP | 2 | 2 | | | | |
| 16 | 6BH–1244H–00 | HOSE 5 | 1 | 1 | | | | |
| 17 | 90467–150A1 | CLIP | 2 | 2 | | | | |
| 18 | 6CN–12588–00 | HOSE 5 | 1 | 1 | | | | |
| 19 | 90447–19021 | TUBE (L860) | 1 | 1 | | | | |
| 20 | 90467–160A0 | CLIP | 1 | 1 | | | | |
| 21 | 6DH–12552–00 | HOSE 8 | 2 | 2 | | | | |
| 22 | F3P–U773D–00 | TUBE | 2 | 2 | | | | |
| 23 | 90467–170A4 | CLIP | 2 | 2 | | | | |
| 24 | 6ET–12577–00 | HOSE 2 | 1 | 1 | | | | |
| 25 | 90467–160A0 | CLIP | 2 | 2 | | | | |
| 26 | 6ET–12579–00 | HOSE 4 | 1 | 1 | | | | |
| 27 | 90467–160A0 | CLIP | 1 | 1 | | | | |

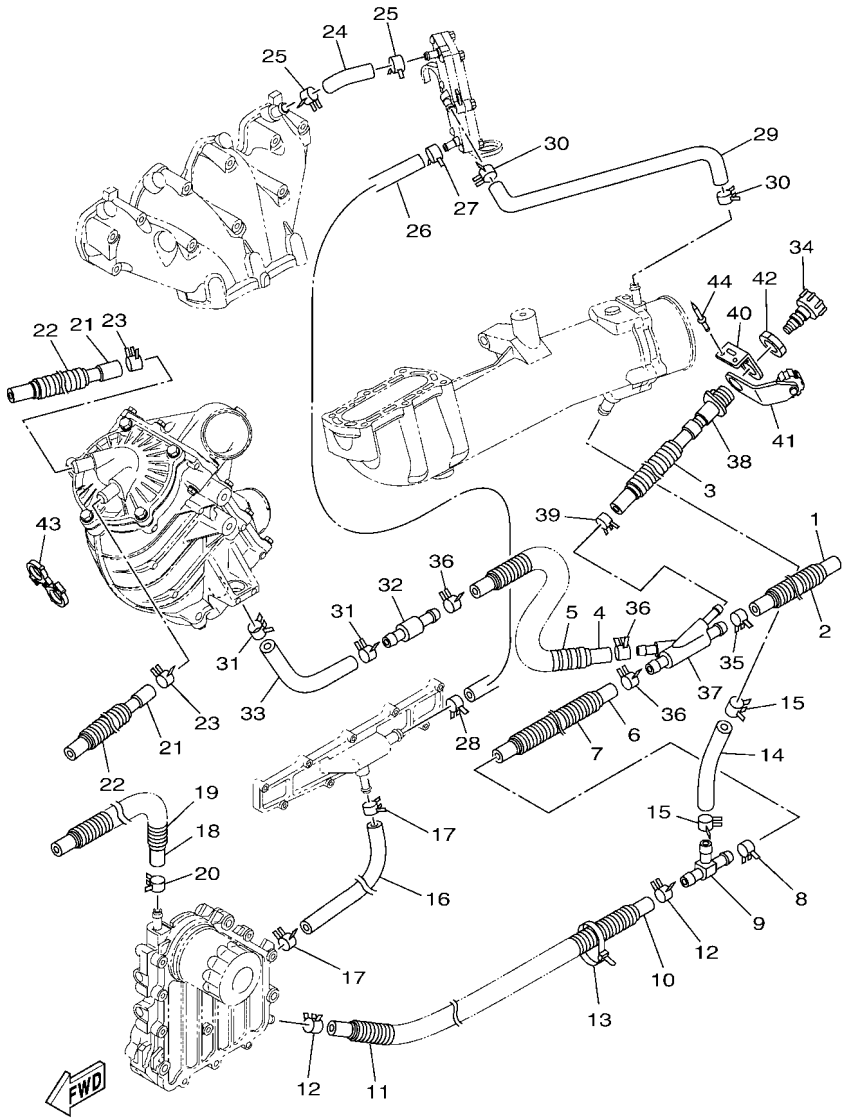


F3P3100-T140

## FIG. 14 EXHAUST 2

| REF. NO. | PART NO. | DESCRIPTION | CAN | EUR | | | | REMARKS |
|---|---|---|---|---|---|---|---|---|
| 28 | 90467–170A5 | CLIP | 1 | 1 | | | | |
| 29 | 6ET–12576–01 | HOSE 1 | 1 | 1 | | | | |
| 30 | 90467–160A0 | CLIP | 2 | 2 | | | | |
| 31 | 90467–200A3 | CLIP | 2 | 2 | | | | |
| 32 | 6S5–12594–00 | JOINT, HOSE 4 | 1 | 1 | | | | |
| 33 | 6S5–12576–01 | HOSE 1 | 1 | 1 | | | | |
| 34 | 67X–E2590–00 | CONDUCTION ASSY | 1 | | | | | FOR CAN |
| | 67X–E2590–10 | CONDUCTION ASSY | | 1 | | | | FOR EUR |
| 35 | 90467–200A3 | CLIP | 1 | 1 | | | | |
| 36 | 90467–200A3 | CLIP | 3 | 3 | | | | |
| 37 | 6ET–12581–10 | JOINT, HOSE 1 | 1 | 1 | | | | |
| 38 | 63M–12580–10 | JOINT ASSY | 1 | 1 | | | | |
| 39 | 90467–150A5 | CLIP | 1 | 1 | | | | |
| 40 | 60E–12443–00 | STAY | 1 | 1 | | | | |
| 41 | 6EY–84385–00 | CAP,1 | 1 | 1 | | | | |
| 42 | EU0–61652–00 | NUT | 1 | 1 | | | | |
| 43 | 90464–24003 | CLAMP | 1 | 1 | | | | |
| 44 | 90267–489U1 | RIVET,BLIND | 2 | 2 | | | | |

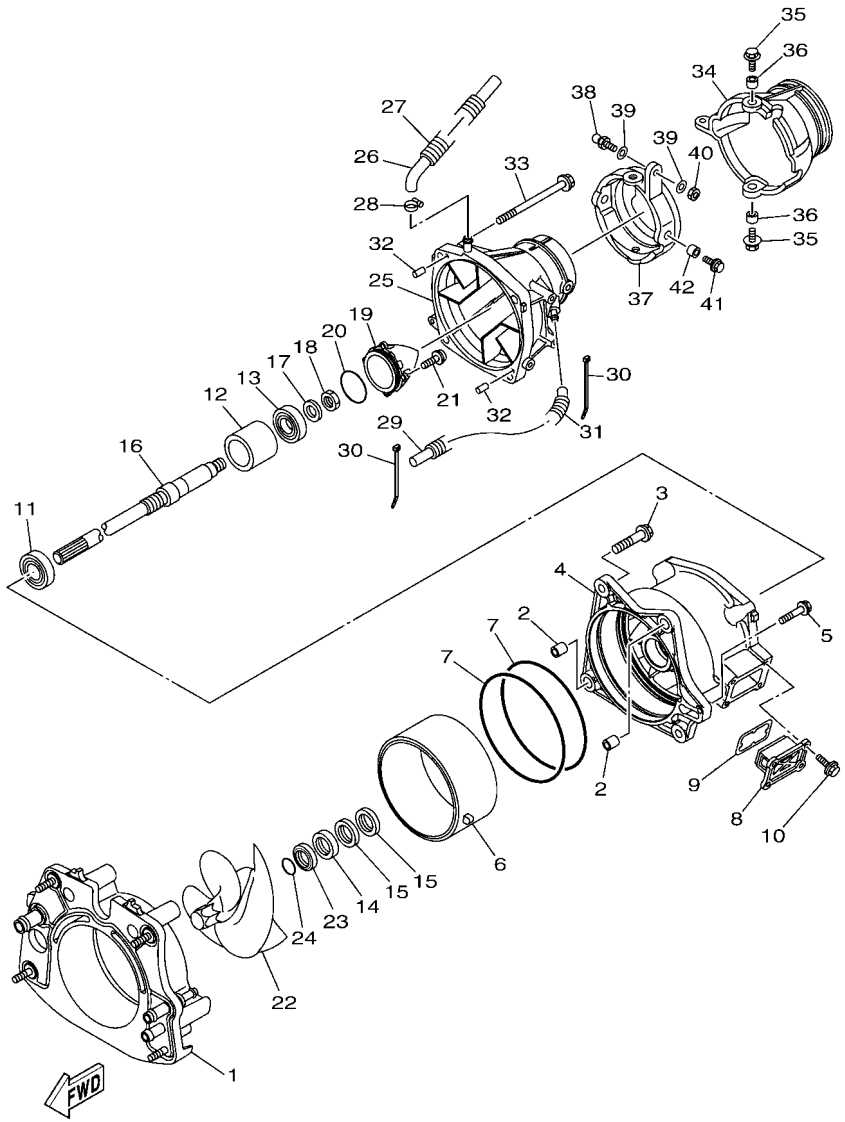


## FIG. 15 JET UNIT 1

| REF. NO. | PART NO. | DESCRIPTION | CAN | EUR | | | | REMARKS |
|---|---|---|---|---|---|---|---|---|
| 1 | 6JN–G5831–00 | PLATE, TRANSOM | 1 | 1 | | | | |
| 2 | 99590–14016 | PIN, DOWEL | 2 | 2 | | | | |
| 3 | 90119–10810 | BOLT, WITH WASHER | 4 | 4 | | | | |
| 4 | 6HL–R1312–00 | HOUSING, IMPELLER | 1 | 1 | | | | |
| 5 | 90119–06893 | BOLT, WITH WASHER | 1 | 1 | | | | |
| 6 | 6GN–R1337–00 | SLEEVE, IMPELLER | 1 | 1 | | | | |
| 7 | 93211–70800 | O-RING | 2 | 2 | | | | |
| 8 | 6GN–G6882–00 | FILTER | 1 | 1 | | | | |
| 9 | 66V–42414–00 | O-RING | 1 | 1 | | | | |
| 10 | 90119–06889 | BOLT, WITH WASHER | 4 | 4 | | | | |
| 11 | 93306–206Y7 | BEARING | 1 | 1 | | | | |
| 12 | 6CS–G5538–00 | SPACER 1 | 1 | 1 | | | | |
| 13 | 93306–355Y0 | BEARING | 1 | 1 | | | | |
| 14 | 93102–31009 | OIL SEAL | 1 | 1 | | | | |
| 15 | 93101–31001 | OIL SEAL | 2 | 2 | | | | |
| 16 | 6ET–G5511–00 | SHAFT, DRIVE | 1 | 1 | | | | |
| 17 | 92990–20600 | WASHER | 1 | 1 | | | | |
| 18 | 95312–20700 | NUT | 1 | 1 | | | | |
| 19 | 6ET–R1326–00 | CAP | 1 | 1 | | | | |
| 20 | 93210–54010 | O-RING | 1 | 1 | | | | |
| 21 | 90110–06822 | BOLT, HEXAGON SOCKET HEAD | 4 | 4 | | | | |
| 22 | 6EV–R1321–00 | IMPELLER | 1 | 1 | | | | |
| 23 | 6BH–R1348–00 | SPACER | 1 | 1 | | | | |
| 24 | 93210–30611 | O-RING | 1 | 1 | | | | |
| 25 | 6ET–R1318–00 | NOZZLE | 1 | 1 | | | | |
| 26 | 6CN–U72M2–00 | HOSE 1 | 1 | 1 | | | | |
| 27 | 90446–24M46 | HOSE (L175) | 1 | 1 | | | | |

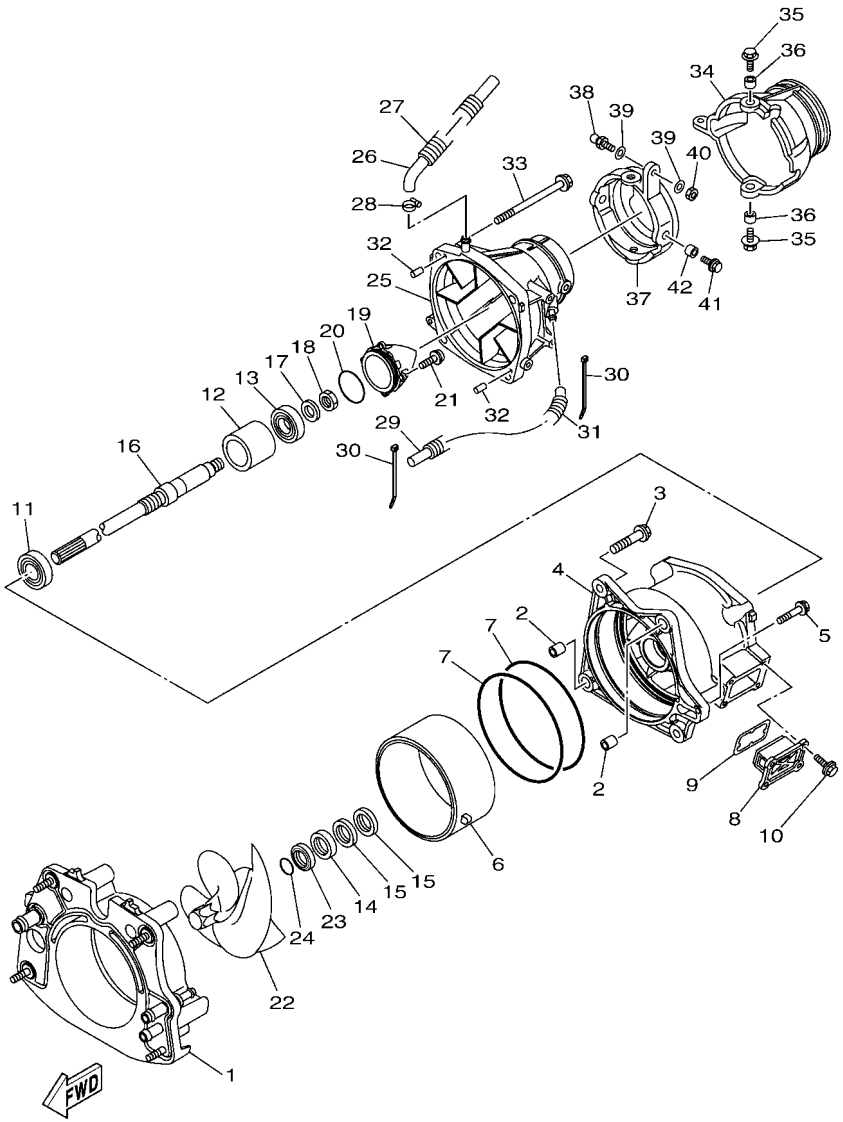


## FIG. 15 JET UNIT 1

| REF. NO. | PART NO. | DESCRIPTION | CAN | EUR | | | | REMARKS |
|---|---|---|---|---|---|---|---|---|
| 28 | 90601–118UF | BAND, HOSE 18 | 1 | 1 | | | | |
| 29 | 6ET–U215E–00 | HOSE | 1 | 1 | | | | |
| 30 | 90465–11829 | CLAMP | 2 | 2 | | | | |
| 31 | 90447–15001 | HOSE, WITH SPRING (L205) | 1 | 1 | | | | |
| 32 | 93606–12019 | PIN, DOWEL | 2 | 2 | | | | |
| 33 | 90119–10810 | BOLT, WITH WASHER | 4 | 4 | | | | |
| 34 | 6S5–R1313–01 | NOZZLE, DEFLECTOR | 1 | 1 | | | | |
| 35 | 90119–08851 | BOLT, WITH WASHER | 2 | 2 | | | | |
| 36 | 90387–08M06 | COLLAR | 2 | 2 | | | | |
| 37 | 6AN–R1190–00 | RING,TRIM | 1 | 1 | | | | |
| 38 | 6ET–U1461–10 | STUD, JOINT BALL | 1 | 1 | | | | |
| 39 | 90201–068M4 | WASHER, PLATE | 2 | 2 | | | | |
| 40 | 95380–06700 | NUT | 1 | 1 | | | | |
| 41 | 90119–08851 | BOLT, WITH WASHER | 2 | 2 | | | | |
| 42 | 90387–08M06 | COLLAR | 2 | 2 | | | | |

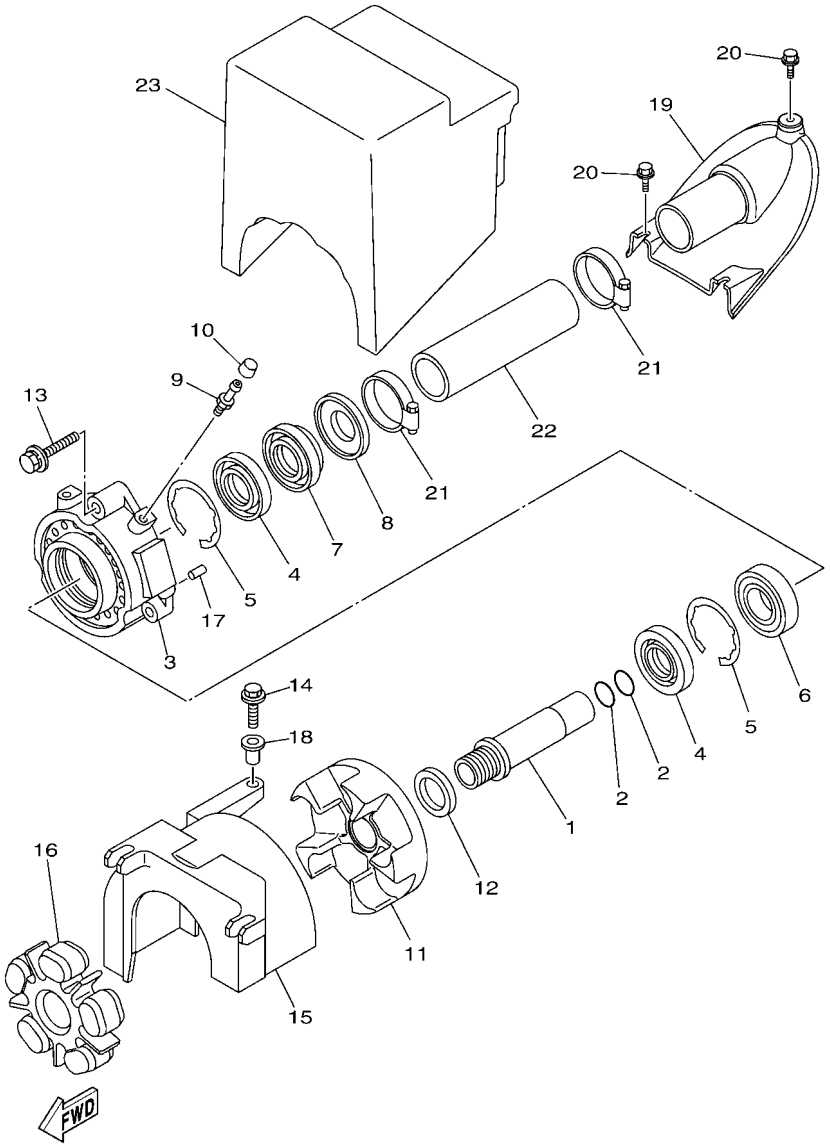


F3P3100-T160

## FIG. 16 JET UNIT 2

| REF. NO. | PART NO. | DESCRIPTION | CAN | EUR | | | | REMARKS |
|---|---|---|---|---|---|---|---|---|
| 1 | 6S5–R1323–00 | SHAFT, COUPLER | 1 | 1 | | | | |
| 2 | 93210–22MF1 | O-RING | 2 | 2 | | | | |
| 3 | 6S5–G5332–00 | HOUSING, BEARING | 1 | 1 | | | | |
| 4 | 93102–29008 | OIL SEAL | 2 | 2 | | | | |
| 5 | 99009–62500 | CIRCLIP | 2 | 2 | | | | |
| 6 | 93306–206Y8 | BEARING | 1 | 1 | | | | |
| 7 | 93102–29009 | OIL SEAL | 1 | 1 | | | | |
| 8 | 6ET–45613–00 | WASHER, THRUST | 1 | 1 | | | | |
| 9 | 93700–06M03 | NIPPLE, GREASE | 1 | 1 | | | | |
| 10 | 663–45119–00 | CAP, GREASE NIPPLE | 1 | 1 | | | | |
| 11 | 6S5–G5593–00 | FLANGE, COUPLING 1 | 1 | 1 | | | | |
| 12 | 6ET–E2289–00 | WASHER | 1 | 1 | | | | |
| 13 | 90119–089UU | BOLT, WITH WASHER | 3 | 3 | | | | |
| 14 | 90119–06891 | BOLT, WITH WASHER | 1 | 1 | | | | |
| 15 | 6S5–R1381–01 | COVER | 1 | 1 | | | | |
| 16 | 6BH–4581J–01 | RUBBER SHAFT COUPLING | 1 | 1 | | | | |
| 17 | 93606–12019 | PIN, DOWEL | 2 | 2 | | | | |
| 18 | 90387–06289 | COLLAR | 1 | 1 | | | | |
| 19 | F2N–U883E–00 | JOINT, PIPE | 1 | 1 | | | | |
| 20 | 90109–06832 | BOLT | 3 | 3 | | | | |
| 21 | 90601–155U4 | BAND, HOSE 55 | 2 | 2 | | | | |
| 22 | F2M–U883B–00 | PIPE 1 | 1 | 1 | | | | |
| 23 | F1K–U892D–00 | FLOTATION, STERN | 1 | 1 | | | | |

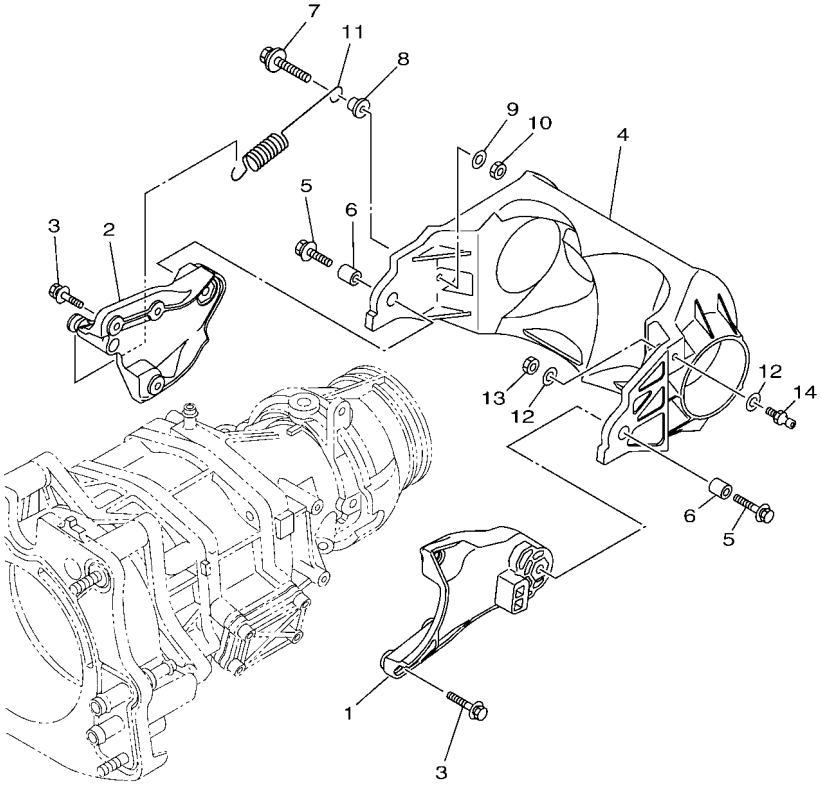

F2TS100-T160

## FIG. 17 JET UNIT 3

| REF. NO. | PART NO. | DESCRIPTION | CAN | EUR | | | | REMARKS |
|---|---|---|---|---|---|---|---|---|
| 1 | 6ET–R1341–10 | BRACKET 1 | 1 | 1 | | | | |
| 2 | 6ET–R1342–10 | BRACKET 2 | 1 | 1 | | | | |
| 3 | 90119–06891 | BOLT, WITH WASHER | 6 | 6 | | | | |
| 4 | 6ET–R1314–10 | GATE, REVERSE | 1 | 1 | | | | |
| 5 | 90119–08840 | BOLT, WITH WASHER | 2 | 2 | | | | |
| 6 | 90387–08M30 | COLLAR | 2 | 2 | | | | |
| 7 | 90119–069UX | BOLT, WITH WASHER | 1 | 1 | | | | |
| 8 | 90387–06319 | COLLAR | 1 | 1 | | | | |
| 9 | 90201–06801 | WASHER, PLATE | 1 | 1 | | | | |
| 10 | 95380–06600 | NUT, HEXAGON | 1 | 1 | | | | |
| 11 | 6S5–R2358–00 | SPRING, RETAINER | 1 | 1 | | | | |
| 12 | 90201–06801 | WASHER, PLATE | 2 | 2 | | | | |
| 13 | 95380–06600 | NUT, HEXAGON | 1 | 1 | | | | |
| 14 | 6GA–U1461–10 | STUD, JOINT BALL | 1 | 1 | | | | |

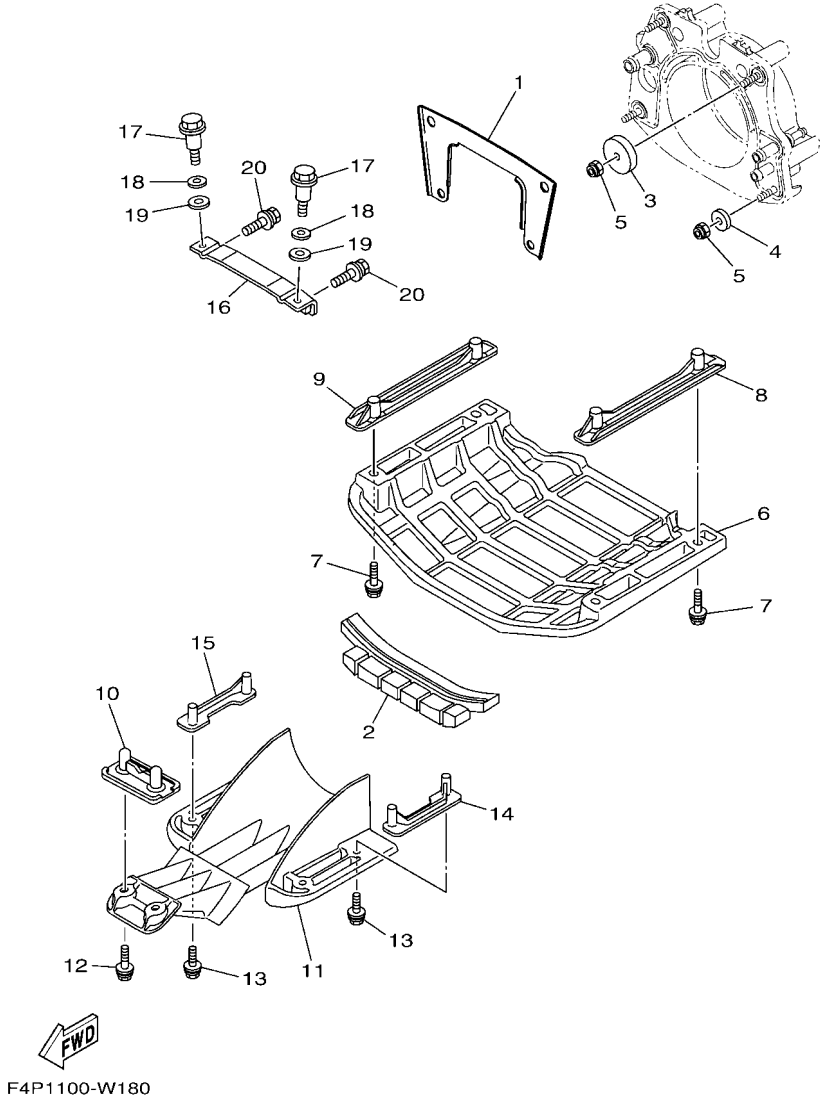


## FIG. 18 JET UNIT 4

| REF. NO. | PART NO. | DESCRIPTION | CAN | EUR | | | | REMARKS |
|---|---|---|---|---|---|---|---|---|
| 1 | 6EY–R1959–00 | BRACKET | 1 | 1 | | | | |
| 2 | F2X–U72C0–00 | SPACER | 1 | 1 | | | | |
| 3 | F1S–U725E–01 | WASHER | 2 | 2 | | | | |
| 4 | 90201–10801 | WASHER, PLATE | 2 | 2 | | | | |
| 5 | 9572R–10300 | NUT, NYLON | 4 | 4 | | | | |
| 6 | F4P–U273B–00 | PLATE 2 | 1 | 1 | | | | |
| 7 | F4L–U3222–00 | BOLT | 4 | 4 | | | | |
| 8 | F2X–U8572–00 | BRACKET 2 | 1 | 1 | | | | |
| 9 | F2X–U8572–00 | BRACKET 2 | 1 | 1 | | | | |
| 10 | F2S–U8577–00 | BRACKET, 3 | 1 | 1 | | | | |
| 11 | F4P–U72B7–00 | SCREEN,INTAKE | 1 | 1 | | | | |
| 12 | 90119–08823 | BOLT, WITH WASHER | 2 | 2 | | | | |
| 13 | 90119–08827 | BOLT, WITH WASHER | 4 | 4 | | | | |
| 14 | F3P–U8571–00 | BRACKET 1 | 1 | 1 | | | | |
| 15 | F3P–U8571–00 | BRACKET 1 | 1 | 1 | | | | |
| 16 | F2C–U7557–01 | BRACKET | 1 | 1 | | | | |
| 17 | 90109–08041 | BOLT | 2 | 2 | | | | |
| 18 | 92990–12200 | WASHER, PLAIN | 2 | 2 | | | | |
| 19 | 90430–12002 | GASKET | 2 | 2 | | | | |
| 20 | 90119–089U7 | BOLT, WITH WASHER | 2 | 2 | | | | |

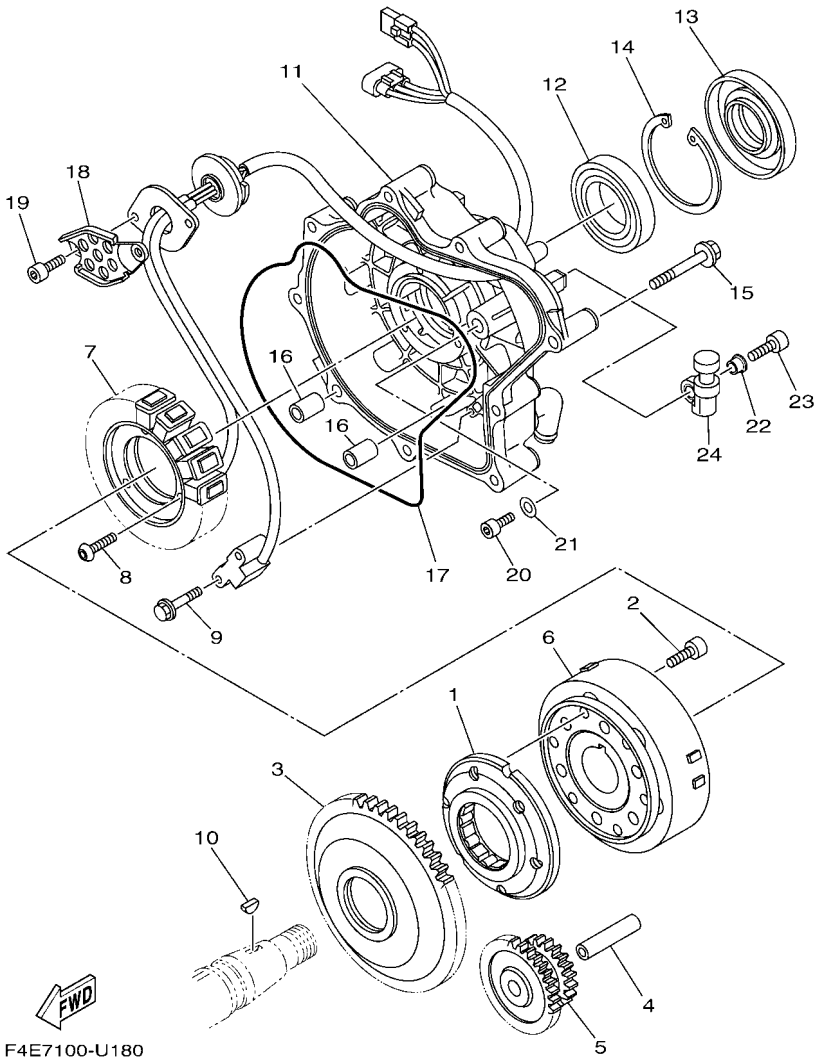


## FIG. 19 GENERATOR

| REF. NO. | PART NO. | DESCRIPTION | CAN | EUR | | | | REMARKS |
|---|---|---|---|---|---|---|---|---|
| 1 | 6S5–15590–00 | STARTER ONE-WAY ASSY | 1 | 1 | | | | |
| 2 | 90110–08212 | BOLT, HEXAGON SOCKET HEAD | 6 | 6 | | | | |
| 3 | 6S5–15515–01 | GEAR 3 | 1 | 1 | | | | |
| 4 | 6S5–15521–00 | SHAFT 1 | 1 | 1 | | | | |
| 5 | 6S5–15517–00 | GEAR, IDLER 2 | 1 | 1 | | | | |
| 6 | 6S5–81450–01 | ROTOR ASSY | 1 | 1 | | | | |
| 7 | 6ET–81410–00 | STATOR ASSY | 1 | 1 | | | | |
| 8 | 90149–06229 | SCREW | 3 | 3 | | | | |
| 9 | 97513–05514 | BOLT, WITH WASHER | 2 | 2 | | | | |
| 10 | 90280–03047 | KEY, WOODRUFF | 1 | 1 | | | | |
| 11 | 6S5–81337–31 | COVER, FLYWHEEL | 1 | 1 | | | | |
| 12 | 93306–00809 | BEARING | 1 | 1 | | | | |
| 13 | 6S5–81167–10 | OIL SEAL | 1 | 1 | | | | |
| 14 | 99009–72500 | CIRCLIP | 1 | 1 | | | | |
| 15 | 90105–08249 | BOLT, FLANGE | 9 | 9 | | | | |
| 16 | 99530–10114 | PIN, DOWEL | 2 | 2 | | | | |
| 17 | 6S5–81168–00 | O-RING | 1 | 1 | | | | |
| 18 | 6S5–81328–00 | CLAMP | 1 | 1 | | | | |
| 19 | 91317–06014 | BOLT,HEX.SOCKET HEAD | 2 | 2 | | | | |
| 20 | 91317–05010 | BOLT,HEX.SOCKET HEAD | 1 | 1 | | | | |
| 21 | 90201–052E8 | WASHER, PLATE | 1 | 1 | | | | |
| 22 | 90387–06M05 | COLLAR | 2 | 2 | | | | |
| 23 | 91380–06020 | BOLT | 2 | 2 | | | | |
| 24 | 6S5–81364–10 | GROMMET | 2 | 2 | | | | |

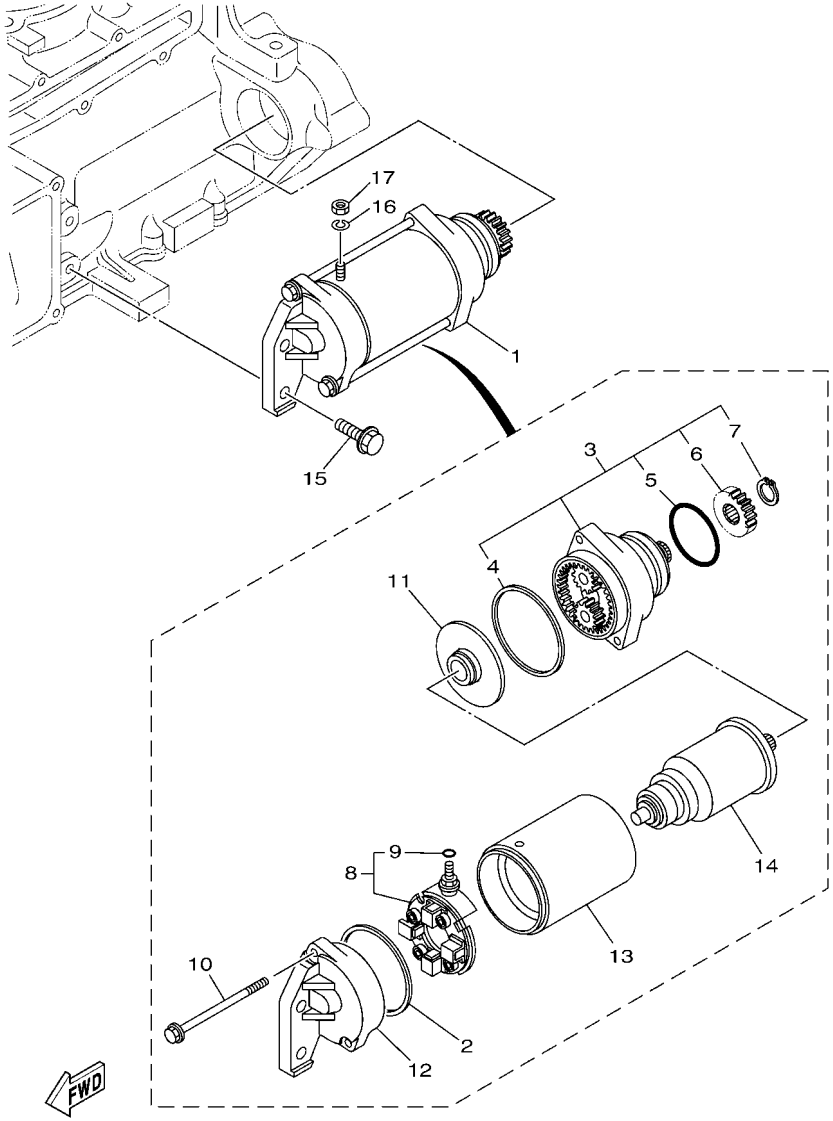


F3P1100-S200

## FIG. 20 STARTING MOTOR

| REF. NO. | PART NO. | DESCRIPTION | CAN | EUR | | | | REMARKS |
|---|---|---|---|---|---|---|---|---|
| 1 | 6S5–81800–00 | STARTING MOTOR ASSY | 1 | 1 | | | | |
| 2 | 11H–81844–00 | .GASKET | 1 | 1 | | | | |
| 3 | 6S5–81830–00 | .FRONT BRACKET ASSY | 1 | 1 | | | | |
| 4 | 4G0–81844–00 | ..GASKET | 1 | 1 | | | | |
| 5 | 1J7–81847–60 | ..O-RING | 1 | 1 | | | | |
| 6 | 5EL–15511–00 | ..GEAR, STARTING MOTOR | 1 | 1 | | | | |
| 7 | 93410–12003 | ..CIRCLIP | 1 | 1 | | | | |
| 8 | 6S5–81840–00 | .BRUSH HOLDER ASSY | 1 | 1 | | | | |
| 9 | 3TB–81847–00 | ..O-RING | 1 | 1 | | | | |
| 10 | 6S5–81826–00 | .BOLT | 2 | 2 | | | | |
| 11 | 5EL–81845–00 | .PLATE | 1 | 1 | | | | |
| 12 | 6S5–81820–00 | .REAR BRACKET ASSY | 1 | 1 | | | | |
| 13 | 6S5–81810–00 | .STATOR ASSY | 1 | 1 | | | | |
| 14 | 5A8–81850–10 | .ARMATURE ASSY | 1 | 1 | | | | |
| 15 | 97513–08530 | BOLT, WITH WASHER | 2 | 2 | | | | |
| 16 | 92990–06100 | WASHER, SPRING | 1 | 1 | | | | |
| 17 | 95380–06700 | NUT | 1 | 1 | | | | |

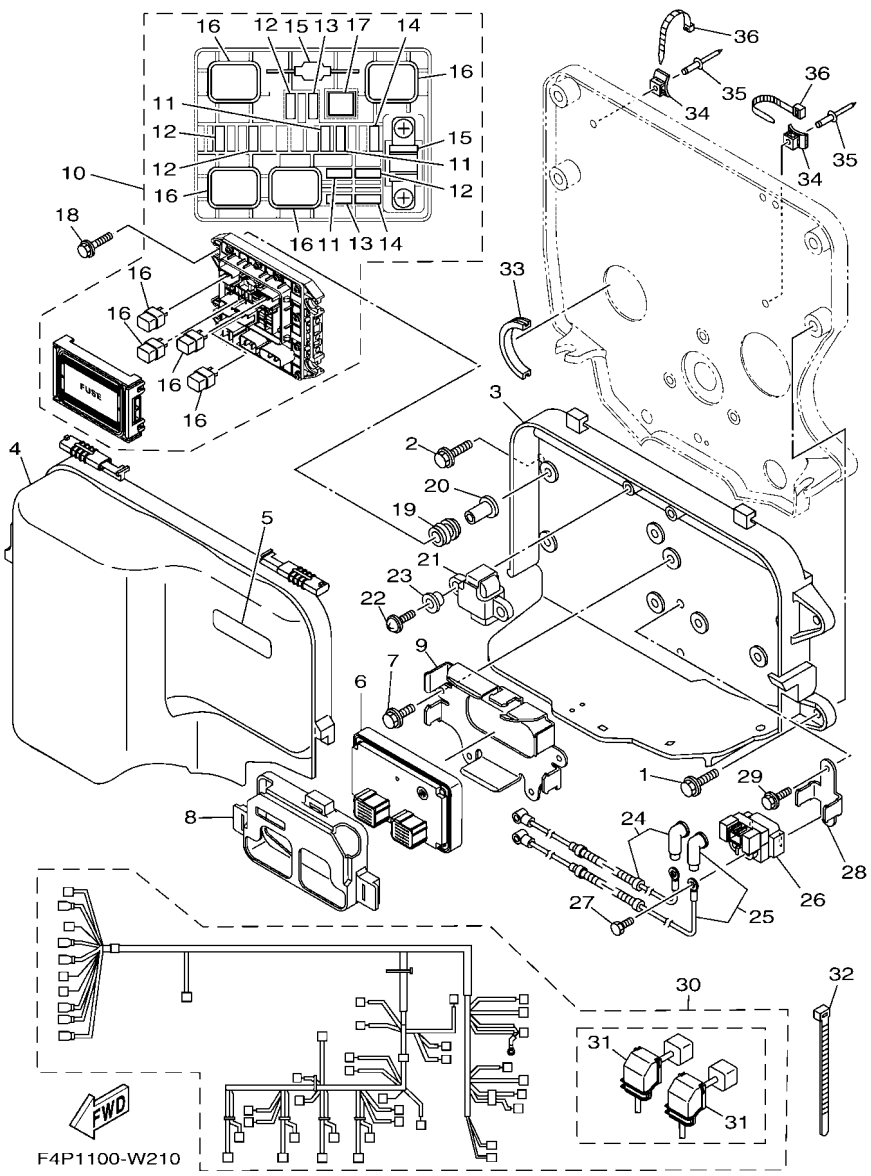


## FIG. 21 ELECTRICAL 1

| REF. NO. | PART NO. | DESCRIPTION | CAN | EUR | | | | REMARKS |
|---|---|---|---|---|---|---|---|---|
| 1 | 90119–089UT | BOLT, WITH WASHER | 2 | 2 | | | | |
| 2 | 90119–089UT | BOLT, WITH WASHER | 2 | 2 | | | | |
| 3 | 6CS–81845–10 | PLATE | 1 | 1 | | | | |
| 4 | 6S5–81942–20 | COVER | 1 | 1 | | | | |
| 5 | 60E–83627–00 | LABEL, CAUTION 7 | 1 | 1 | | | | |
| 6 | 6JN–8591A–00 | ENGINE CONTROL UNIT ASSY | 1 | | | | | FOR CAN |
| | 6JN–8591A–10 | ENGINE CONTROL UNIT ASSY | | 1 | | | | FOR EUR |
| 7 | 95814–06012 | BOLT, FLANGE | 4 | 4 | | | | |
| 8 | 6EY–8591S–00 | GROMMET, ECU | 1 | 1 | | | | |
| 9 | 6ET–81948–00 | BRACKET | 1 | 1 | | | | |
| 10 | 6EX–82170–02 | FUSE BOX ASSY | 1 | 1 | | | | |
| 11 | 67F–82151–30 | .FUSE (3A) | 3 | 3 | | | | |
| 12 | 67F–82151–40 | .FUSE (10A) | 4 | 4 | | | | |
| 13 | 67F–82151–00 | .FUSE (20A) | 2 | 2 | | | | |
| 14 | 67F–82151–10 | .FUSE (30A) | 2 | 2 | | | | |
| 15 | 6EX–82151–00 | .FUSE (50A) | 2 | 2 | | | | |
| 16 | 6EX–8195A–00 | .RELAY ASSY | 4 | 4 | | | | |
| 17 | 6EX–2812A–00 | .PULLER, FUSE | 1 | 1 | | | | |
| 18 | 90119–06311 | BOLT, WITH WASHER | 4 | 4 | | | | |
| 19 | 6A0–82317–00 | DAMPER, IGNITION COIL | 4 | 4 | | | | |
| 20 | 90387–06119 | COLLAR | 4 | 4 | | | | |
| 21 | 6ET–82576–00 | SENSOR, LEAN ANGLE | 1 | 1 | | | | |
| 22 | 97780–60025 | SCREW, TAPPING | 2 | 2 | | | | |
| 23 | 90387–06M05 | COLLAR | 2 | 2 | | | | |
| 24 | 6CS–82115–00 | WIRE, PLUS LEAD | 1 | 1 | | | | |
| 25 | 6CS–82117–00 | WIRE, LEAD | 1 | 1 | | | | |
| 26 | 1B7–81940–00 | STARTER RELAY ASSY (2768102-A) | 1 | 1 | | | | |

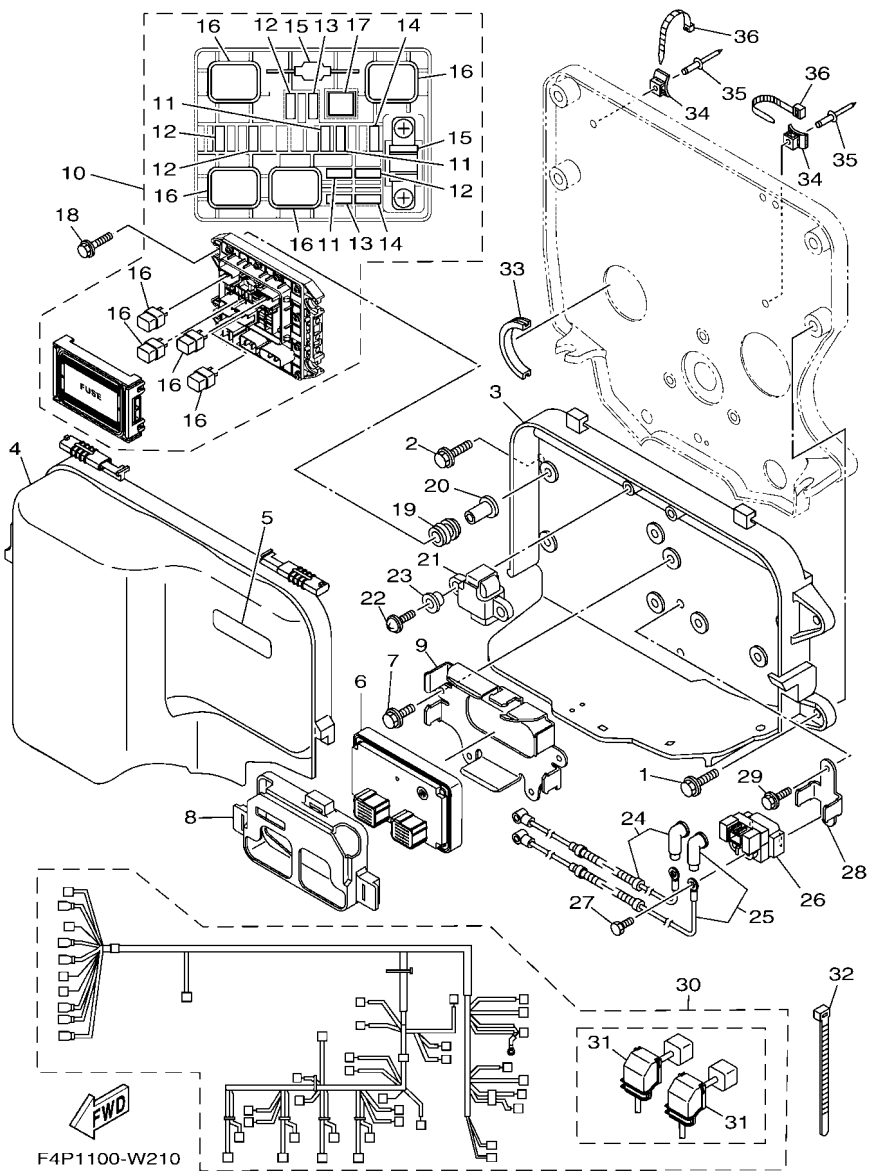


## FIG. 21 ELECTRICAL 1

| REF. NO. | PART NO. | DESCRIPTION | CAN | EUR | | | | REMARKS |
|---|---|---|---|---|---|---|---|---|
| 27 | 97E95–06612 | BOLT, HEXAGON W/W DEEP RECESS | 2 | 2 | | | | |
| 28 | 6CS–81953–00 | STAY, RELAY | 1 | 1 | | | | |
| 29 | 95814–06012 | BOLT, FLANGE | 2 | 2 | | | | |
| 30 | 6JN–8259L–00 | WIRE HARNESS ASSY 1 | 1 | 1 | | | | |
| 31 | 6EM–82599–00 | .COVER, CONNECTOR | 2 | 2 | | | | |
| 32 | 90465–14M66 | CLAMP | 1 | 1 | | | | |
| 33 | F1S–U828H–01 | TRIM, 1 | 1 | 1 | | | | |
| 34 | F1W–U828M–00 | BASE, CLAMP | 2 | 2 | | | | |
| 35 | 90267–48802 | RIVET, BLIND | 2 | 2 | | | | |
| 36 | 90464–32801 | CLAMP | 2 | 2 | | | | |

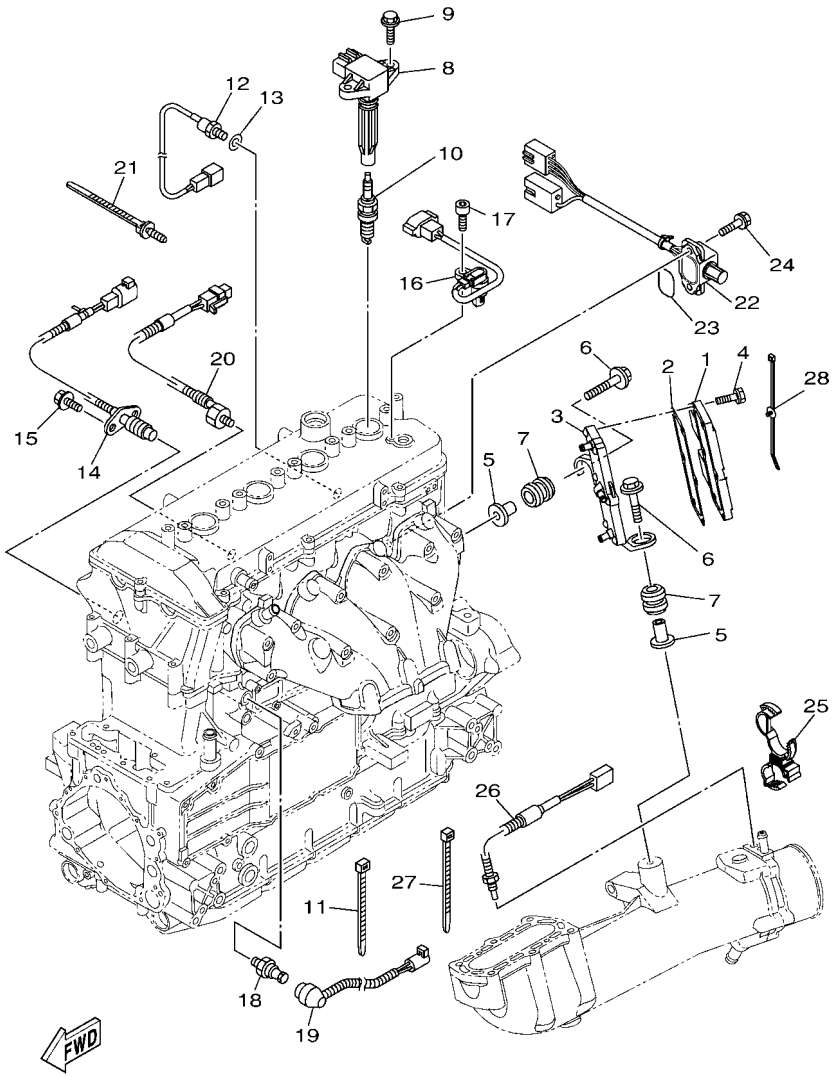


F3P3100-T220

## FIG. 22 ELECTRICAL 2

| REF. NO. | PART NO. | DESCRIPTION | CAN | EUR | | | | REMARKS |
|---|---|---|---|---|---|---|---|---|
| 1 | 6EK–81960–10 | RECTIFIER & REGULATOR ASSY | 1 | 1 | | | | |
| 2 | 6ET–81975–01 | PLATE, RECTIFIER FITTING | 1 | 1 | | | | |
| 3 | 6ET–81972–00 | COVER, RECTIFIER | 1 | 1 | | | | |
| 4 | 90119–06MA4 | BOLT, WITH WASHER | 6 | 6 | | | | |
| 5 | 90387–08M37 | COLLAR | 2 | 2 | | | | |
| 6 | 90119–08187 | BOLT, WITH WASHER | 2 | 2 | | | | |
| 7 | 90480–22M15 | GROMMET | 2 | 2 | | | | |
| 8 | 6S5–82310–00 | IGNITION COIL ASSY | 4 | 4 | | | | |
| 9 | 90105–06903 | BOLT, FLANGE | 8 | 8 | | | | |
| 10 | 94702–00435 | PLUG, SPARK (NGK LFR7A) | 4 | 4 | | | | |
| 11 | 90464–35132 | CLAMP | 9 | 9 | | | | |
| 12 | 61A–85790–00 | THERMOSENSOR ASSY | 1 | 1 | | | | |
| 13 | 92990–10600 | WASHER, PLATE | 1 | 1 | | | | |
| 14 | 6CR–82560–00 | THERMO SWITCH ASSY | 1 | 1 | | | | |
| 15 | 97E95–06516 | BOLT, HEXAGON W/W DEEP RECESS | 2 | 2 | | | | |
| 16 | 60E–85896–02 | SENSOR, CAM POSITION | 1 | 1 | | | | |
| 17 | 91380–06016 | BOLT | 1 | 1 | | | | |
| 18 | 68V–82504–00 | OIL PRESSURE SWITCH ASSY | 1 | 1 | | | | |
| 19 | 6S5–81315–00 | LEAD WIRE ASSY | 1 | 1 | | | | |
| 20 | 6AN–85780–00 | SENSOR, KNOCK | 1 | 1 | | | | |
| 21 | 90464–31001 | CLAMP | 1 | 1 | | | | |
| 22 | 6CS–8273J–10 | EARTH PLATE COMP. | 1 | 1 | | | | |
| 23 | 93210–32172 | O-RING | 1 | 1 | | | | |
| 24 | 90119–06MA3 | BOLT, WITH WASHER | 2 | 2 | | | | |
| 25 | 90464–20008 | CLAMP | 1 | 1 | | | | |
| 26 | 6AA–85790–00 | THERMOSENSOR ASSY | 1 | 1 | | | | |
| 27 | 90464–31001 | CLAMP | 1 | 1 | | | | |

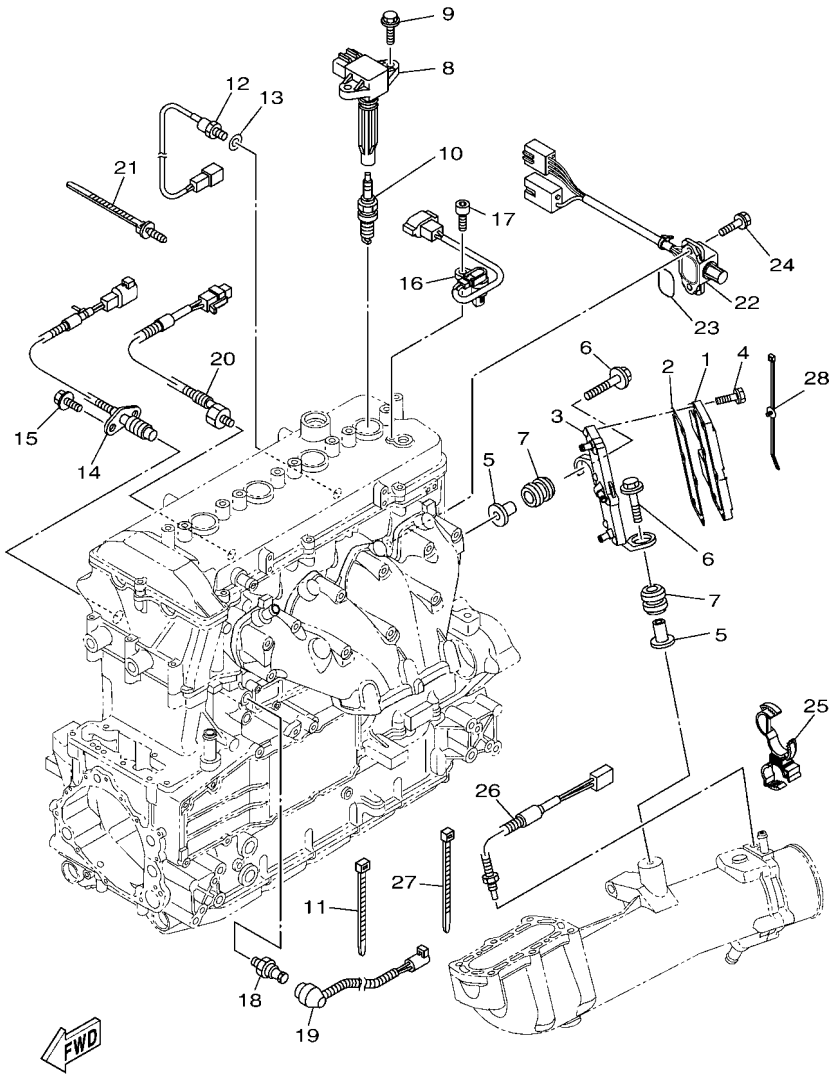


F3P3100-T220

## FIG. 22 ELECTRICAL 2

| REF. NO. | PART NO. | DESCRIPTION | CAN | EUR | | | | REMARKS |
|---|---|---|---|---|---|---|---|---|
| 28 | 90464–31002 | CLAMP | 1 | 1 | | | | |

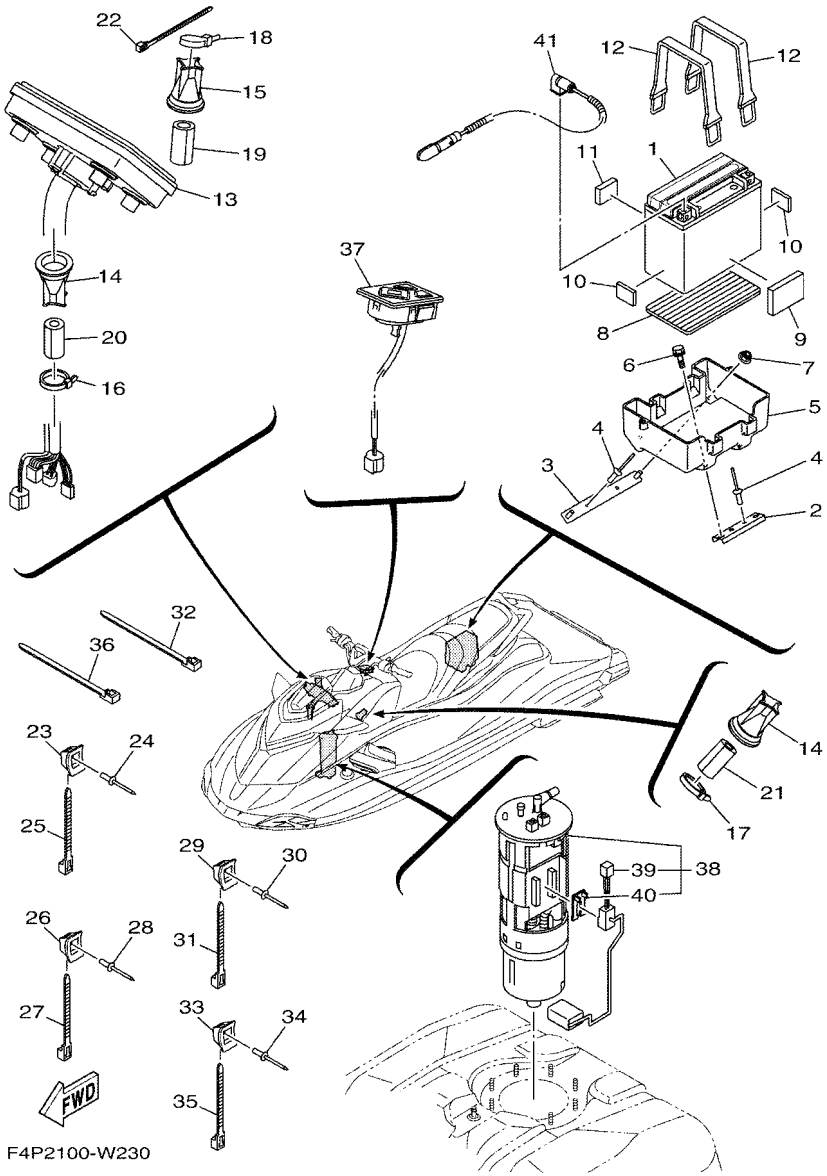


## FIG. 23 ELECTRICAL 3

| REF. NO. | PART NO. | DESCRIPTION | CAN | EUR | | | | REMARKS |
|---|---|---|---|---|---|---|---|---|
| 1 | 5FU–H2100–20 | BATTERY ASSY (YUASA YTX20L-BS) | 1 | 1 | | | | |
| 2 | F2S–U8592–00 | PLATE, BASE 2 | 1 | 1 | | | | |
| 3 | F2S–U8593–00 | PLATE, BASE 3 | 1 | 1 | | | | |
| 4 | 90267–489U1 | RIVET,BLIND | 4 | 4 | | | | |
| 5 | F2S–U8211–00 | CASE, BATTERY | 1 | 1 | | | | |
| 6 | 90119–06832 | BOLT, WITH WASHER | 2 | 2 | | | | |
| 7 | F2N–U142L–00 | NUT, LOCK | 2 | 2 | | | | |
| 8 | F1S–U8221–00 | PAD, BATTERY | 1 | 1 | | | | |
| 9 | F1W–U759C–01 | MAT 2 | 1 | 1 | | | | |
| 10 | EU0–U8221–30 | PAD, BATTERY 2 | 2 | 2 | | | | |
| 11 | F2C–U1743–00 | PACKING | 1 | 1 | | | | |
| 12 | F4P–U821D–00 | BAND, BATTERY 1 | 2 | 2 | | | | |
| 13 | F4P–U820A–01 | METER ASSY | 1 | 1 | | | | |
| 14 | F3J–U822E–00 | GROMMET | 2 | 2 | | | | |
| 15 | F3J–U822E–00 | GROMMET | 1 | 1 | | | | |
| 16 | 90464–32801 | CLAMP | 1 | 1 | | | | |
| 17 | 90464–32801 | CLAMP | 1 | 1 | | | | |
| 18 | 90464–32801 | CLAMP | 1 | 1 | | | | |
| 19 | GJ1–U7578–21 | PACKING, HOSE 2 | 1 | 1 | | | | |
| 20 | GJ1–U7578–11 | PACKING, HOSE 2 | 1 | 1 | | | | |
| 21 | GJ1–U7578–11 | PACKING, HOSE 2 | 1 | 1 | | | | |
| 22 | 90464–31827 | CLAMP | 1 | 1 | | | | 122X4.80 |
| 23 | F1W–U828M–00 | BASE, CLAMP | 7 | 7 | | | | |
| 24 | 90267–48806 | RIVET, BLIND | 9 | 9 | | | | |
| 25 | 90464–32801 | CLAMP | 10 | 10 | | | | |
| 26 | F1W–U828M–00 | BASE, CLAMP | 2 | 2 | | | | |
| 27 | 90464–32801 | CLAMP | 2 | 2 | | | | |

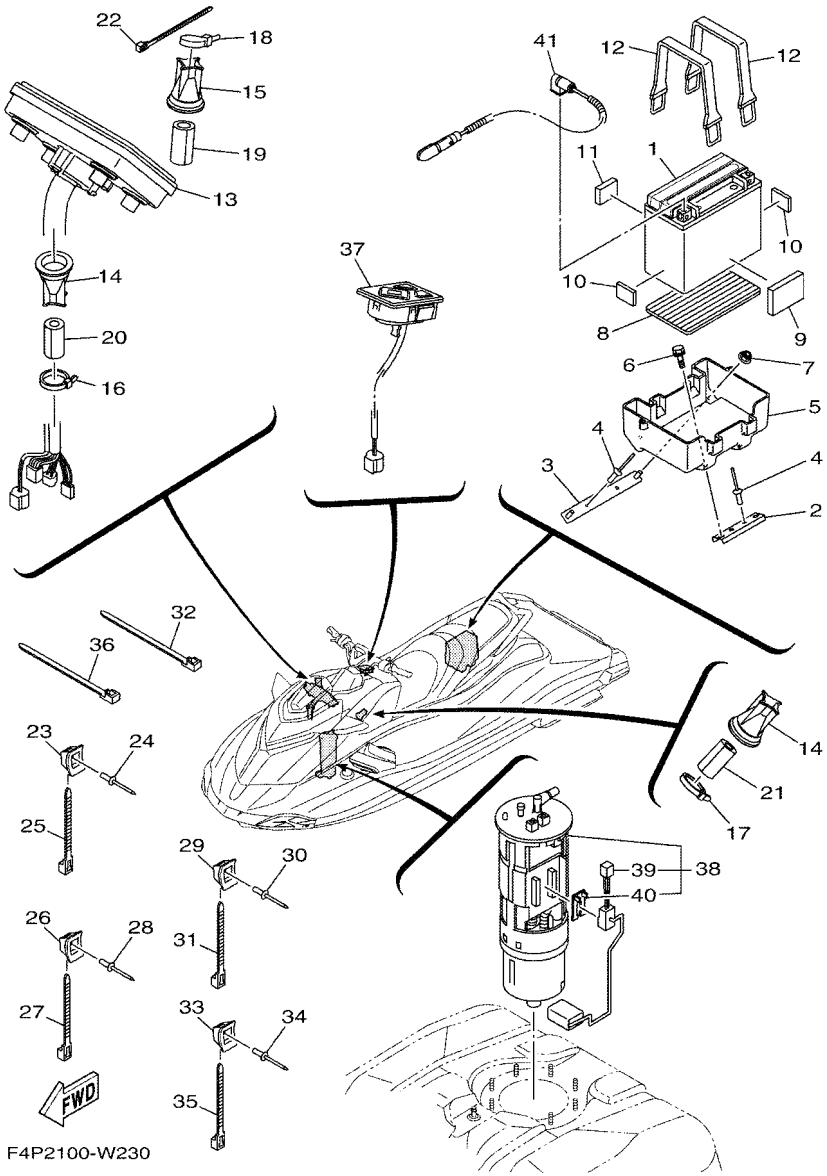


## FIG. 23 ELECTRICAL 3

| REF. NO. | PART NO. | DESCRIPTION | CAN | EUR | | | | REMARKS |
|---|---|---|---|---|---|---|---|---|
| 28 | 90267–48806 | RIVET, BLIND | 2 | 2 | | | | |
| 29 | F1W–U828M–00 | BASE, CLAMP | 3 | 3 | | | | |
| 30 | 90267–48806 | RIVET, BLIND | 3 | 3 | | | | |
| 31 | 90464–32801 | CLAMP | 2 | 2 | | | | |
| 32 | 90464–99804 | CLAMP | 1 | 1 | | | | |
| 33 | F1W–U828M–00 | BASE, CLAMP | 1 | 1 | | | | |
| 34 | 90267–48806 | RIVET, BLIND | 1 | 1 | | | | |
| 35 | 90464–99804 | CLAMP | 1 | 1 | | | | |
| 36 | 90601–200U2 | BAND | 1 | 1 | | | | |
| 37 | F4P–U8090–01 | SWITCH ASSY. | 1 | 1 | | | | |
| 38 | 6S5–13907–04 | FUEL PUMP COMP. | 1 | 1 | | | | |
| 39 | 6S5–682E0–00 | .FUEL SENDER ASSY | 1 | 1 | | | | |
| 40 | 60E–82556–00 | .DAMPER, STOPPER | 1 | 1 | | | | |
| 41 | 6S5–82116–00 | WIRE, MINUS LEAD | 1 | 1 | | | | |

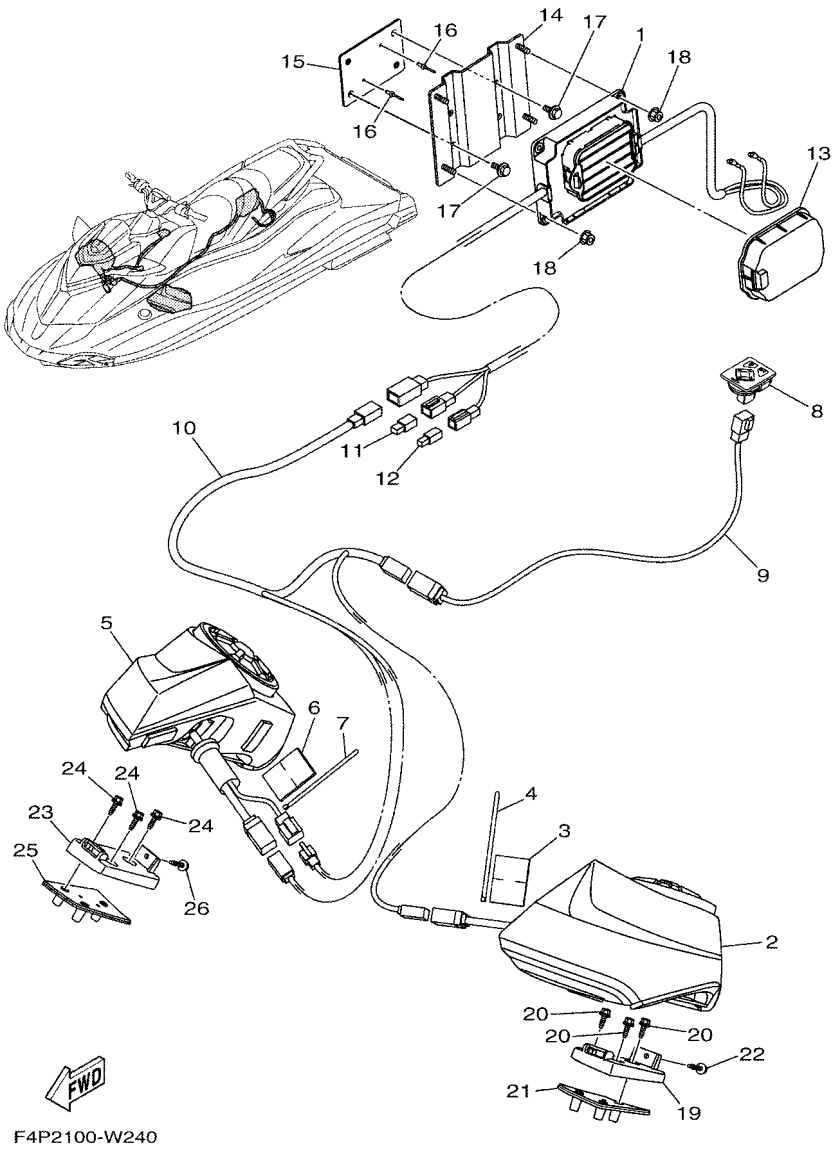


## FIG. 24 ELECTRICAL 4

| REF. NO. | PART NO. | DESCRIPTION | CAN | EUR | | | | REMARKS |
|---|---|---|---|---|---|---|---|---|
| 1 | F4N–U0840–03 | POWER BALANCE SYSTEM ASSY | 1 | 1 | | | | |
| 2 | F4N–U8102–01 | SPEAKER ASSY 1 | 1 | 1 | | | | FOR BLUE |
| | F4N–U8102–11 | SPEAKER ASSY 1 | 1 | 1 | | | | FOR BLACK |
| 3 | GJ1–U7578–11 | PACKING, HOSE 2 | 1 | 1 | | | | |
| 4 | 90464–32801 | CLAMP | 1 | 1 | | | | |
| 5 | F4N–U8103–01 | SPEAKER ASSY 2 | 1 | 1 | | | | FOR BLUE |
| | F4N–U8103–11 | SPEAKER ASSY 2 | 1 | 1 | | | | FOR BLACK |
| 6 | GJ1–U7578–11 | PACKING, HOSE 2 | 1 | 1 | | | | |
| 7 | 90464–32801 | CLAMP | 1 | 1 | | | | |
| 8 | F4N–U81AJ–00 | CONTROLLER, AUDIO | 1 | 1 | | | | |
| 9 | F4N–U827D–01 | WIRE HARNESS 2 | 1 | 1 | | | | |
| 10 | F4N–U8104–00 | WIRE SPEAKER ASSY | 1 | 1 | | | | |
| 11 | F4P–U0228–00 | CONNECTOR | 1 | 1 | | | | |
| 12 | F4P–U0362–00 | CONNECTOR | 1 | 1 | | | | |
| 13 | F4N–U2177–00 | SPLASH COVER | 1 | 1 | | | | |
| 14 | F4N–UFG21–01 | BRACKET 1 | 1 | 1 | | | | |
| 15 | F4N–UFG22–01 | BRACKET 2 | 1 | 1 | | | | |
| 16 | 90267–48806 | RIVET, BLIND | 2 | 2 | | | | |
| 17 | 90119–08822 | BOLT, WITH WASHER | 4 | 4 | | | | |
| 18 | F2N–U142L–00 | NUT, LOCK | 4 | 4 | | | | |
| 19 | F4N–UE6GA–01 | BRACKET, SPEAKER 1 | 1 | 1 | | | | |
| 20 | 90119–06878 | BOLT, WITH WASHER | 3 | 3 | | | | |
| 21 | F4N–U0392–00 | BRACKET | 1 | 1 | | | | |
| 22 | 90119–06882 | BOLT, WITH WASHER | 1 | 1 | | | | |
| 23 | F4N–UE6GA–11 | BRACKET, SPEAKER 1 | 1 | 1 | | | | |
| 24 | 90119–06878 | BOLT, WITH WASHER | 3 | 3 | | | | |
| 25 | F4N–U0392–10 | BRACKET | 1 | 1 | | | | |

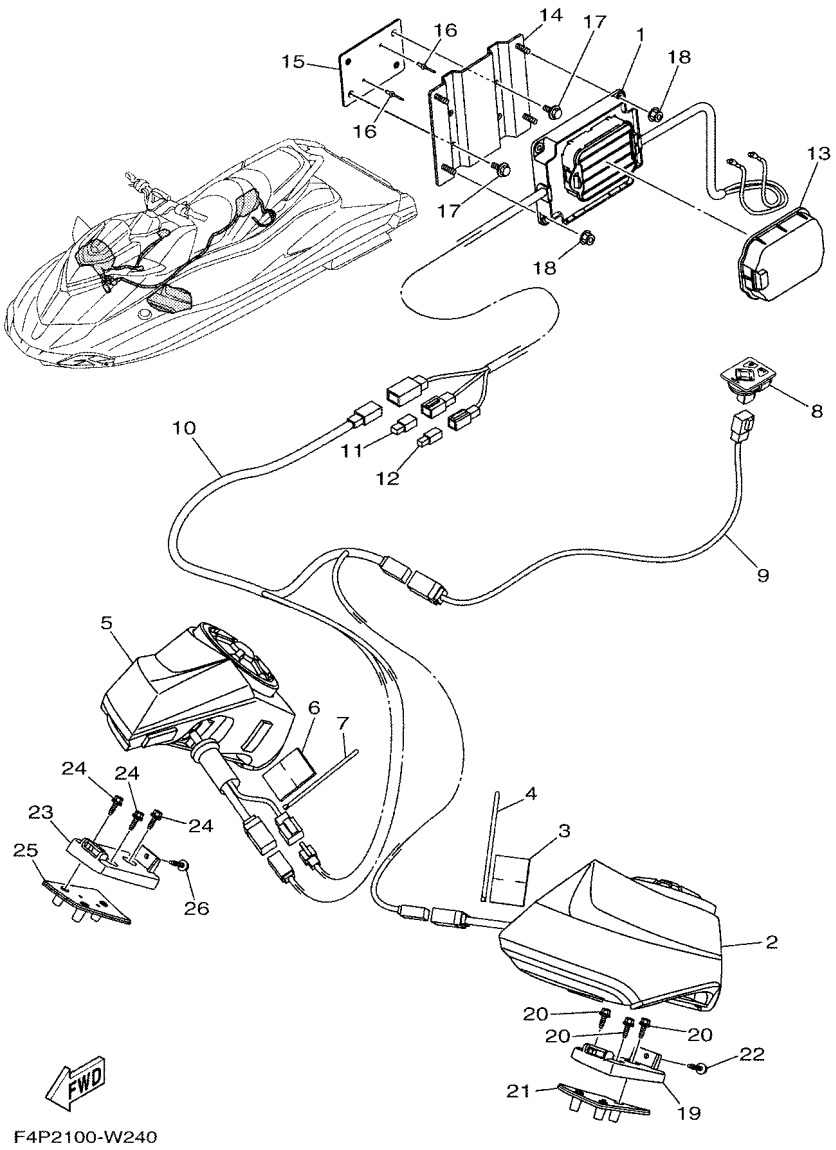


## FIG. 24 ELECTRICAL 4

| REF. NO. | PART NO. | DESCRIPTION | CAN | EUR | | | | REMARKS |
|---|---|---|---|---|---|---|---|---|
| 26 | 90119–06882 | BOLT, WITH WASHER | 1 | 1 | | | | |

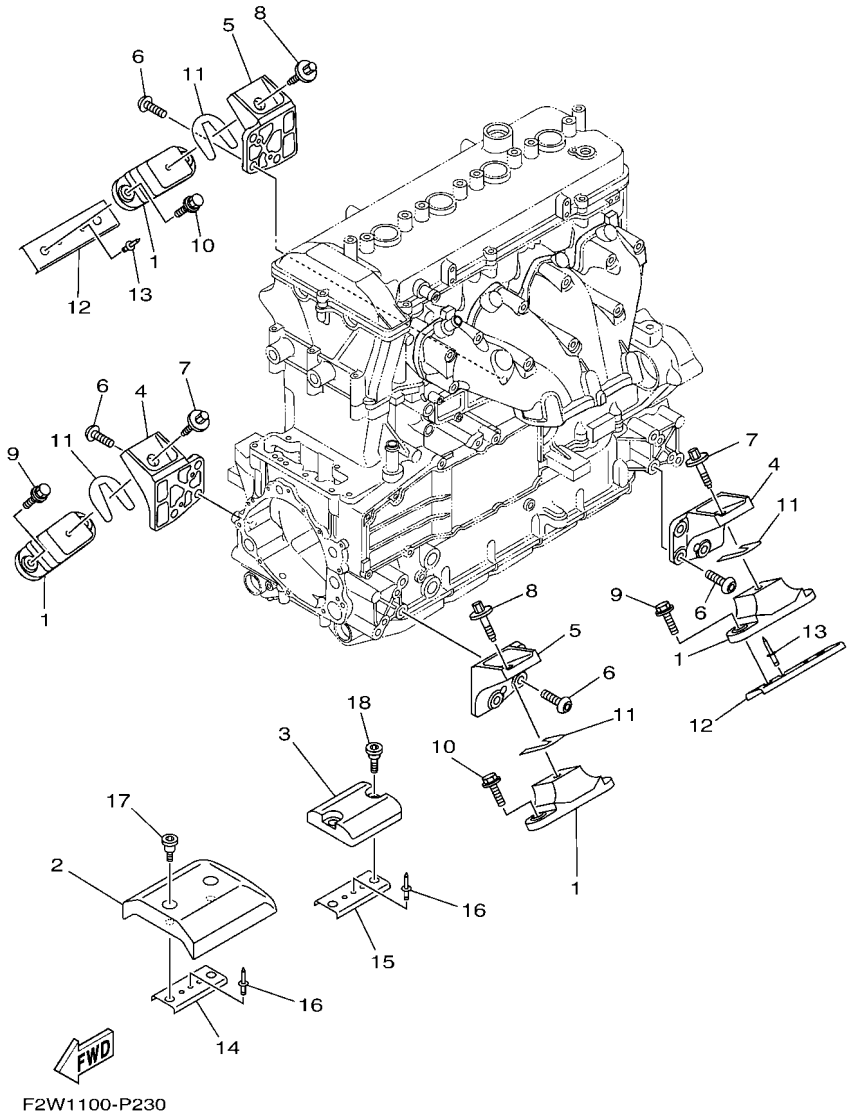


## FIG. 25 ENGINE MOUNT

| REF. NO. | PART NO. | DESCRIPTION | CAN | EUR | | | | REMARKS |
|---|---|---|---|---|---|---|---|---|
| 1 | 67X–44517–10 | MOUNT RUBBER | 4 | 4 | | | | |
| 2 | 6CN–G4532–00 | STOPPER, UPPER MOUNT | 1 | 1 | | | | |
| 3 | 6CN–G4574–00 | STOPPER, LOWER MOUNT RUBBER | 1 | 1 | | | | |
| 4 | 6BH–41661–00–94 | BRACKET 1 | 2 | 2 | | | | |
| 5 | 6BH–41662–00–94 | BRACKET 2 | 2 | 2 | | | | |
| 6 | 90149–10068 | SCREW | 12 | 12 | | | | |
| 7 | 90119–08859 | BOLT, WITH WASHER | 2 | 2 | | | | |
| 8 | 90119–08859 | BOLT, WITH WASHER | 2 | 2 | | | | |
| 9 | 90119–08823 | BOLT, WITH WASHER | 4 | 4 | | | | |
| 10 | 90119–08823 | BOLT, WITH WASHER | 4 | 4 | | | | |
| 11 | EU0–U7354–00–01 | SHIM (T=0.1) | 4 | 4 | | | | UN |
| | EU0–U7354–00–03 | SHIM (T=0.3) | 4 | 4 | | | | UN |
| | EU0–U7354–00–05 | SHIM (T=0.5) | 4 | 4 | | | | UN |
| | EU0–U7354–00–10 | SHIM (T=1.0) | 4 | 4 | | | | UN |
| | EU0–U7354–00–20 | SHIM (T=2.0) | 4 | 4 | | | | UN |
| 12 | F2S–U732B–00 | PLATE | 2 | 2 | | | | |
| 13 | 90267–489U2 | RIVET, BLIND | 4 | 4 | | | | |
| 14 | F2M–U732B–00 | PLATE | 1 | 1 | | | | |
| 15 | F2M–U732B–00 | PLATE | 1 | 1 | | | | |
| 16 | 90267–489U2 | RIVET, BLIND | 2 | 2 | | | | |
| 17 | 90109–06874 | BOLT | 2 | 2 | | | | |
| 18 | 90109–06875 | BOLT | 2 | 2 | | | | |

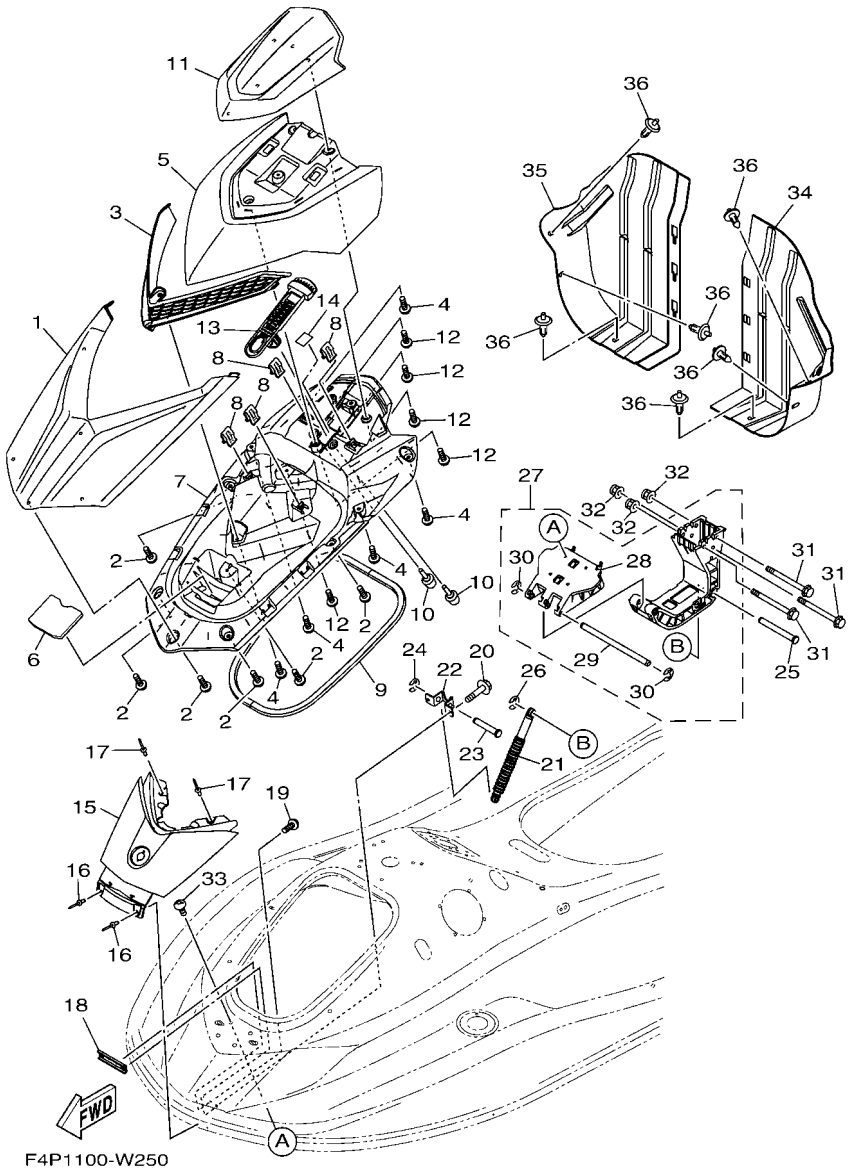


## FIG. 26 ENGINE HATCH 1

| REF. NO. | PART NO. | DESCRIPTION | CAN | EUR | | | | REMARKS |
|---|---|---|---|---|---|---|---|---|
| 1 | F4P–U517B–00–98 | LID, ENGINE ROOM (LGB) | 1 | 1 | | | | FOR BLUE |
| | F4P–U517B–00–P1 | LID, ENGINE ROOM (SSA) | 1 | 1 | | | | FOR BLACK |
| 2 | F2S–U13C1–00 | SCREW | 6 | 6 | | | | |
| 3 | F4P–U517V–00 | ORNAMENT, CENTER | 1 | 1 | | | | |
| 4 | F2S–U13C1–00 | SCREW | 5 | 5 | | | | |
| 5 | F4P–U515N–00–98 | VISOR (LGB) | 1 | 1 | | | | FOR BLUE |
| | F4P–U515N–00–P1 | VISOR (SSA) | 1 | 1 | | | | FOR BLACK |
| 6 | F4P–U7462–00 | STOPPER, PACKING | 1 | 1 | | | | |
| 7 | F4P–U519G–00 | INNER, ENGINE HATCH | 1 | 1 | | | | |
| 8 | F3Y–U153K–00 | CLIP | 4 | 4 | | | | |
| 9 | F4P–U2663–00 | PACKING 1 | 1 | 1 | | | | |
| 10 | F1W–U3768–01 | CUSHION, RUBBER | 2 | 2 | | | | |
| 11 | F4P–U515P–00–P0 | VISOR 2 (PURW) | 1 | 1 | | | | FOR BLUE |
| | F4P–U515P–00–P1 | VISOR 2 (VLGS3) | 1 | 1 | | | | FOR BLACK |
| 12 | F2S–U13C1–00 | SCREW | 5 | 5 | | | | |
| 13 | F4P–U517C–00 | LOCK, LID | 1 | 1 | | | | |
| 14 | F2C–U1743–00 | PACKING | 1 | 1 | | | | |
| 15 | F4P–U513M–00–98 | COVER, FRONT (LGB) | 1 | 1 | | | | FOR BLUE |
| | F4P–U513M–00–P1 | COVER, FRONT (SSA) | 1 | 1 | | | | FOR BLACK |
| 16 | 90267–489U8 | RIVET, BLIND | 2 | 2 | | | | |
| 17 | 90267–48806 | RIVET, BLIND | 2 | 2 | | | | |
| 18 | F2S–U8592–00 | PLATE, BASE 2 | 1 | 1 | | | | |
| 19 | 90267–489U1 | RIVET,BLIND | 2 | 2 | | | | |
| 20 | 90119–06832 | BOLT, WITH WASHER | 2 | 2 | | | | |
| 21 | F4P–U515D–00 | DAMPER 1 | 1 | 1 | | | | |
| 22 | F4P–UFRV1–00 | BRACKET, DAMPER 1 | 1 | 1 | | | | |
| 23 | F4P–U7243–00 | CLEVIS | 1 | 1 | | | | |

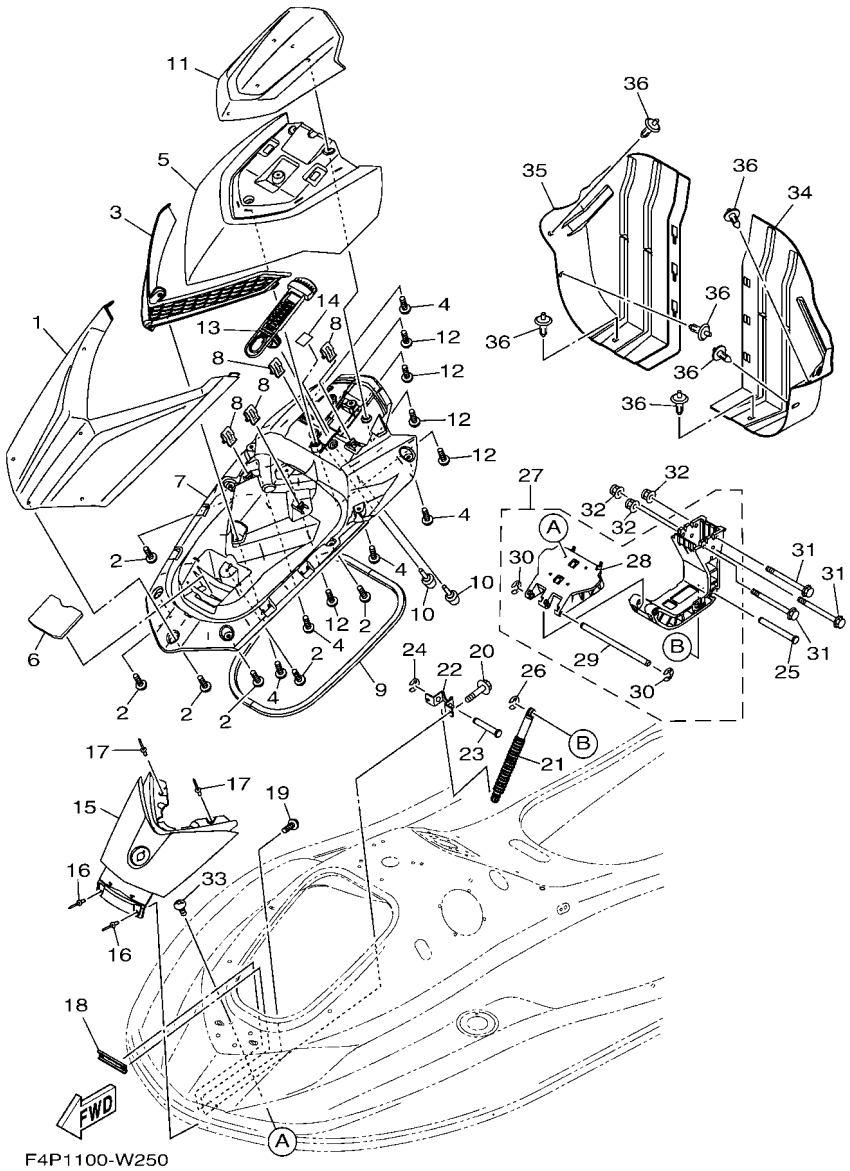


## FIG. 26 ENGINE HATCH 1

| REF. NO. | PART NO. | DESCRIPTION | CAN | EUR | | | | REMARKS |
|---|---|---|---|---|---|---|---|---|
| 24 | F4P–U515C–00 | E-RING | 1 | 1 | | | | |
| 25 | F4P–UF8DM–00 | CLEVIS 1 | 1 | 1 | | | | |
| 26 | F4P–U515C–00 | E-RING | 1 | 1 | | | | |
| 27 | F4P–U515A–00 | HINGE ASSY. | 1 | 1 | | | | |
| 28 | F4P–U518E–00 | .PLATE, HINGE LID | 1 | 1 | | | | |
| 29 | F4P–U7256–00 | .ROD | 1 | 1 | | | | |
| 30 | F4P–U515C–00 | .E-RING | 2 | 2 | | | | |
| 31 | F4P–U4445–00 | BOLT, STUD 1 | 3 | 3 | | | | |
| 32 | F3Y–U142L–00 | NUT, LOCK | 3 | 3 | | | | |
| 33 | 90111–06873 | BOLT,HEX. SOCKET BUTTON | 4 | 4 | | | | |
| 34 | F4P–U475B–00 | LOCKER,BOW | 1 | 1 | | | | |
| 35 | F4P–U475F–00 | PLATE, LOKER BOW | 1 | 1 | | | | |
| 36 | F4P–U1454–00 | RIVET | 6 | 6 | | | | |

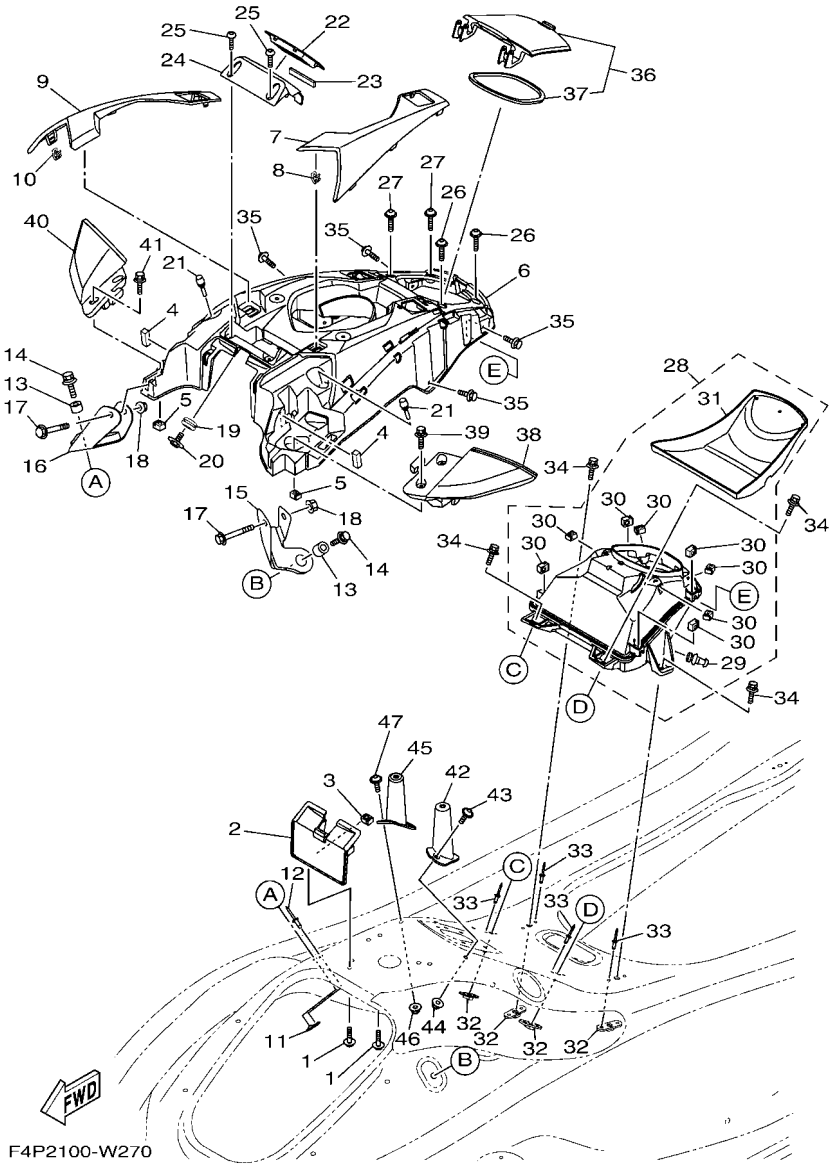


## FIG. 27 ENGINE HATCH 2

| REF. NO. | PART NO. | DESCRIPTION | CAN | EUR | | | | REMARKS |
|---|---|---|---|---|---|---|---|---|
| 1 | 90119–06880 | BOLT, WITH WASHER | 2 | 2 | | | | |
| 2 | F4P–U517F–00 | HOOK,LID LOCK | 1 | 1 | | | | |
| 3 | F3X–U517E–00 | NUT | 2 | 2 | | | | |
| 4 | F4P–U1743–00 | PACKING | 2 | 2 | | | | |
| 5 | F3X–U517E–00 | NUT | 4 | 4 | | | | |
| 6 | F4P–U5554–00 | COVER, CENTER | 1 | 1 | | | | |
| 7 | F4P–U517W–00–98 | ORNAMENT LH (LGB) | 1 | 1 | | | | FOR BLUE |
| | F4P–U517W–00–P1 | ORNAMENT LH (SSA) | 1 | 1 | | | | FOR BLACK |
| 8 | F3Y–U153K–00 | CLIP | 1 | 1 | | | | |
| 9 | F4P–U517X–00–98 | ORNAMENT RH (LGB) | 1 | 1 | | | | FOR BLUE |
| | F4P–U517X–00–P1 | ORNAMENT RH (SSA) | 1 | 1 | | | | FOR BLACK |
| 10 | F3Y–U153K–00 | CLIP | 1 | 1 | | | | |
| 11 | F2X–U5175–00 | PLATE, FIX | 2 | 2 | | | | |
| 12 | 90267–489U1 | RIVET,BLIND | 2 | 2 | | | | |
| 13 | F4P–U5239–00 | SPACER | 2 | 2 | | | | |
| 14 | 90119–06832 | BOLT, WITH WASHER | 2 | 2 | | | | |
| 15 | F4P–UF88B–00 | BRACKET ASSY.,1 | 1 | 1 | | | | |
| 16 | F4P–UF88C–00 | BRACKET ASSY.,2 | 1 | 1 | | | | |
| 17 | 90119–06304 | BOLT, WITH WASHER | 2 | 2 | | | | |
| 18 | F2N–U142L–00 | NUT, LOCK | 2 | 2 | | | | |
| 19 | 90480–19800 | GROMMET | 4 | 4 | | | | |
| 20 | 90119–05803 | BOLT, WITH WASHER | 4 | 4 | | | | |
| 21 | F1W–U3768–01 | CUSHION, RUBBER | 2 | 2 | | | | |
| 22 | F4P–U826F–00 | ORNAMENT, METER | 1 | 1 | | | | |
| 23 | F0X–U515E–01 | DAMPER 2 | 1 | 1 | | | | |
| 24 | F4P–U8262–00 | COVER METER | 1 | 1 | | | | |
| 25 | F2S–U13C1–00 | SCREW | 2 | 2 | | | | |

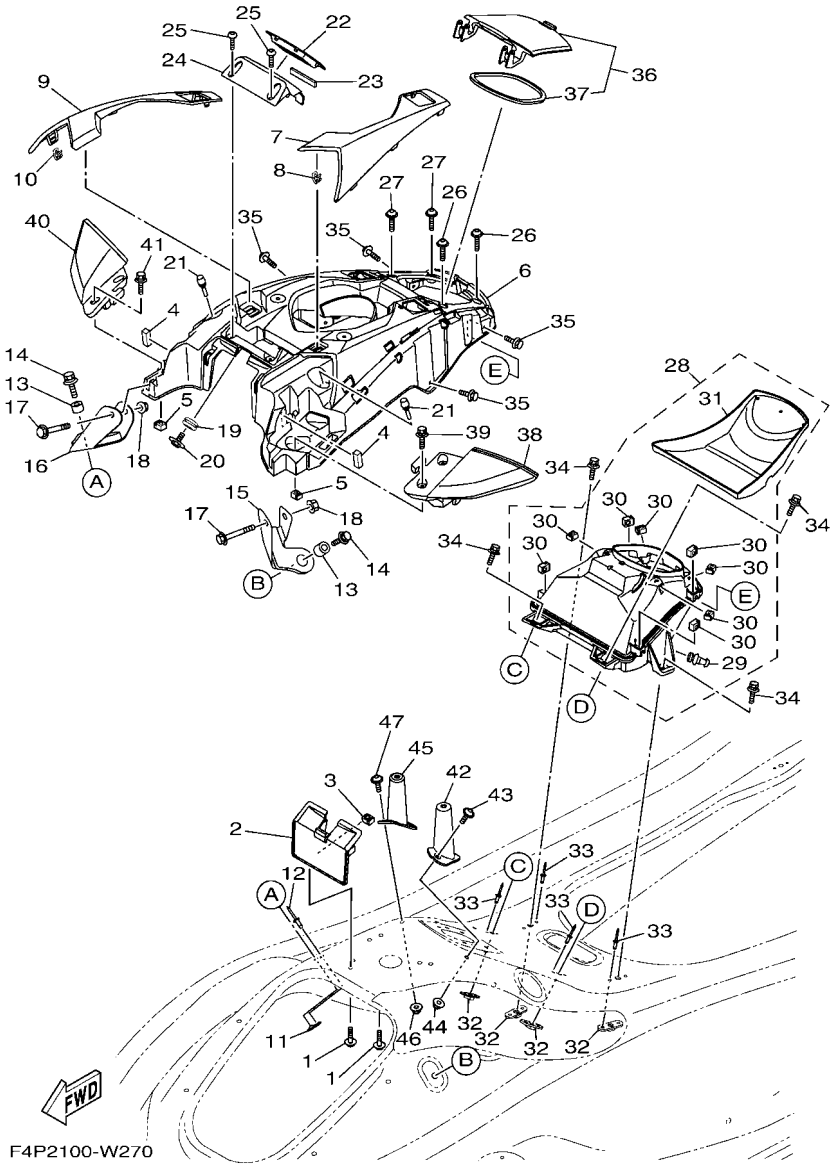


## FIG. 27 ENGINE HATCH 2

| REF. NO. | PART NO. | DESCRIPTION | CAN | EUR | | | | REMARKS |
|---|---|---|---|---|---|---|---|---|
| 26 | F3X–U7823–12 | SCREW | 2 | 2 | | | | |
| 27 | F3X–U7823–12 | SCREW | 2 | 2 | | | | |
| 28 | F4P–U1708–00 | GLOVE BOX HATCH ASSY | 1 | 1 | | | | |
| 29 | F3X–U2723–00 | .SEAL | 1 | 1 | | | | |
| 30 | F3X–U517E–00 | .NUT | 8 | 8 | | | | |
| 31 | F4P–U591L–00 | .INNER, CASE | 1 | 1 | | | | |
| 32 | F2C–U826C–00 | BRACKET | 4 | 4 | | | | |
| 33 | F4P–U516R–00 | RIVET 1 | 4 | 4 | | | | |
| 34 | 90119–08822 | BOLT, WITH WASHER | 4 | 4 | | | | |
| 35 | F4P–U1355–00 | BOLT | 4 | 4 | | | | |
| 36 | F4P–U4705–00 | GLOVE BOX COVER ASSY | 1 | 1 | | | | |
| 37 | F4P–U519D–00 | .PACKING CASE | 1 | 1 | | | | |
| 38 | F4P–U590D–01 | MIRROR ASSY. 1 | 1 | 1 | | | | |
| 39 | 90119–06304 | BOLT, WITH WASHER | 2 | 2 | | | | |
| 40 | F4P–U590E–01 | MIRROR ASSY. 2 | 1 | 1 | | | | |
| 41 | 90119–06304 | BOLT, WITH WASHER | 2 | 2 | | | | |
| 42 | F4P–U974A–00 | RFM.,DASH BOARD 1 | 1 | 1 | | | | |
| 43 | F2N–U142L–00 | NUT, LOCK | 2 | 2 | | | | |
| 44 | F3X–U7823–12 | SCREW | 2 | 2 | | | | |
| 45 | F4P–U974B–00 | RFM.,DASH BOARD 2 | 1 | 1 | | | | |
| 46 | F2N–U142L–00 | NUT, LOCK | 2 | 2 | | | | |
| 47 | F3X–U7823–12 | SCREW | 2 | 2 | | | | |

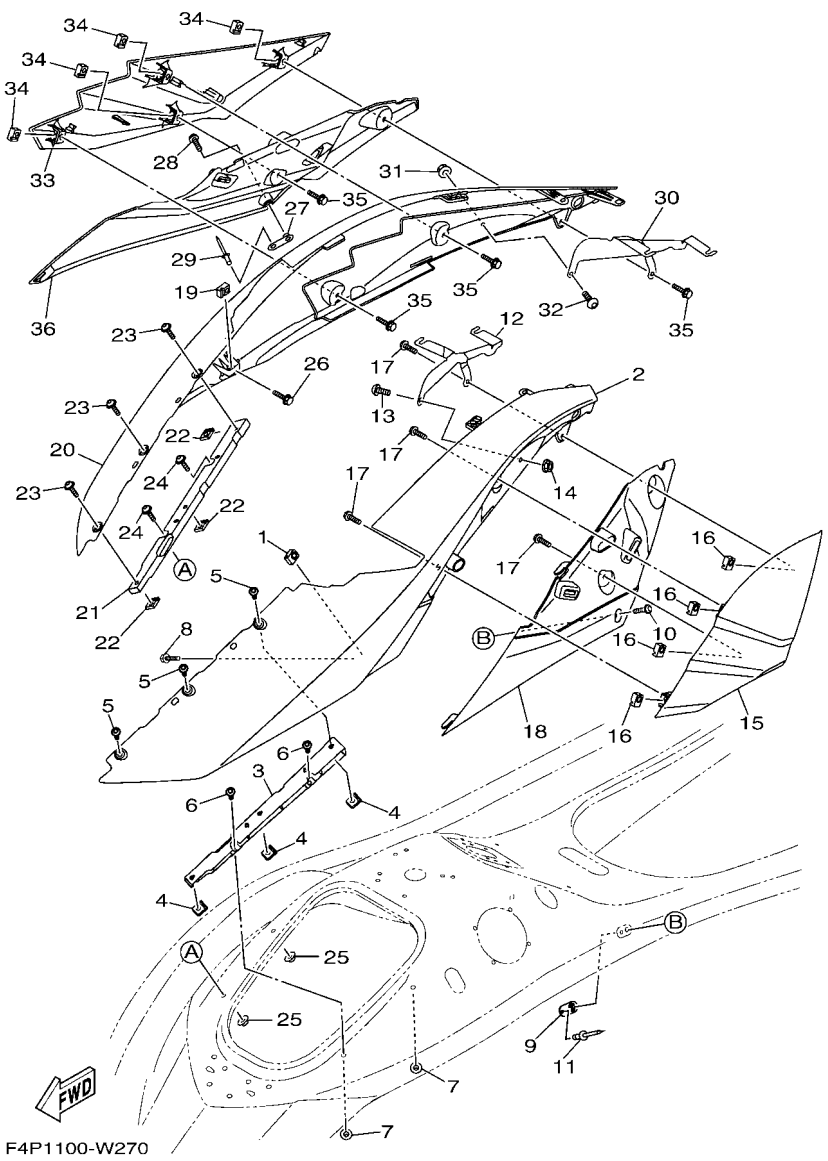


## FIG. 28 ENGINE HATCH 3

| REF. NO. | PART NO. | DESCRIPTION | CAN | EUR | | | | REMARKS |
|---|---|---|---|---|---|---|---|---|
| 1 | F3X–U517E–00 | NUT | 1 | 1 | | | | |
| 2 | F4P–U377B–00–P0 | COVER,SIDE 1 (PURW) | 1 | 1 | | | | FOR BLUE |
| | F4P–U377B–00–P1 | COVER,SIDE 1 (MDNM7) | 1 | 1 | | | | FOR BLACK |
| 3 | F4P–U377M–00 | BRKT., COVER SIDE 1 | 1 | 1 | | | | |
| 4 | F3X–U517E–00 | NUT | 3 | 3 | | | | |
| 5 | 90111–06873 | BOLT,HEX. SOCKET BUTTON | 3 | 3 | | | | |
| 6 | 90119–06892 | BOLT, WITH WASHER | 2 | 2 | | | | |
| 7 | F2N–U142L–00 | NUT, LOCK | 2 | 2 | | | | |
| 8 | 90119–06880 | BOLT, WITH WASHER | 1 | 1 | | | | |
| 9 | F2X–U5175–00 | PLATE, FIX | 1 | 1 | | | | |
| 10 | F3X–U7823–02 | SCREW | 1 | 1 | | | | |
| 11 | 90267–489U1 | RIVET,BLIND | 1 | 1 | | | | |
| 12 | F4P–U756B–01 | HOOK,B | 1 | 1 | | | | |
| 13 | F2S–U7823–10 | SCREW | 1 | 1 | | | | |
| 14 | F2N–U142L–00 | NUT, LOCK | 1 | 1 | | | | |
| 15 | F4P–U377F–10 | ORNAMENT, SIDE LH | 1 | 1 | | | | FOR BLUE |
| | F4P–U377F–20 | ORNAMENT, SIDE LH | 1 | 1 | | | | FOR BLACK |
| 16 | F3X–U517E–00 | NUT | 4 | 4 | | | | |
| 17 | 90119–06892 | BOLT, WITH WASHER | 4 | 4 | | | | |
| 18 | F4P–U377H–00 | INNER, COVER SIDE 1 | 1 | 1 | | | | |
| 19 | F3X–U517E–00 | NUT | 1 | 1 | | | | |
| 20 | F4P–U377C–00–P0 | COVER,SIDE 2 (PURW) | 1 | 1 | | | | FOR BLUE |
| | F4P–U377C–00–P1 | COVER,SIDE 2 (MDNM7) | 1 | 1 | | | | FOR BLACK |
| 21 | F4P–U377N–00 | BRKT, COVER SIDE 2 | 1 | 1 | | | | |
| 22 | F3X–U517E–00 | NUT | 3 | 3 | | | | |
| 23 | 90111–06873 | BOLT,HEX. SOCKET BUTTON | 3 | 3 | | | | |
| 24 | 90119–06892 | BOLT, WITH WASHER | 2 | 2 | | | | |

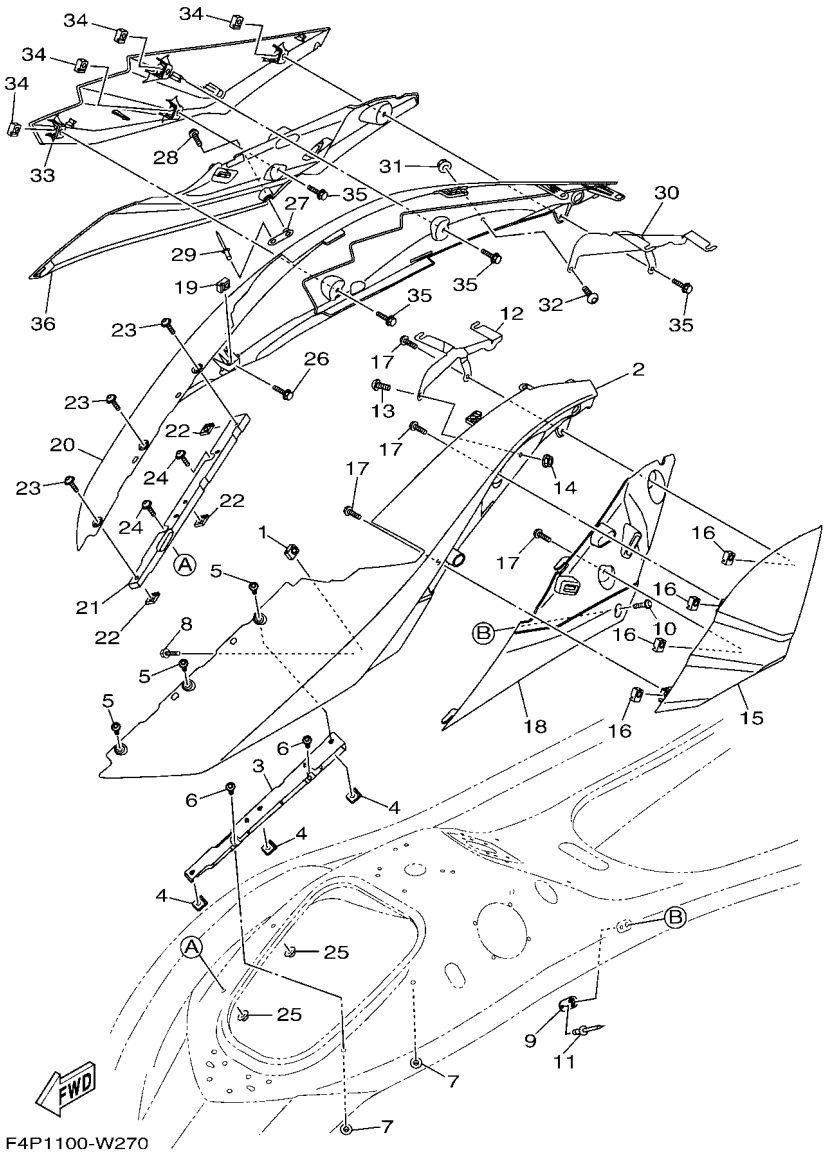


## FIG. 28 ENGINE HATCH 3

| REF. NO. | PART NO. | DESCRIPTION | CAN | EUR | | | | REMARKS |
|---|---|---|---|---|---|---|---|---|
| 25 | F2N–U142L–00 | NUT, LOCK | 2 | 2 | | | | |
| 26 | 90119–06880 | BOLT, WITH WASHER | 1 | 1 | | | | |
| 27 | F2X–U5175–00 | PLATE, FIX | 1 | 1 | | | | |
| 28 | F3X–U7823–02 | SCREW | 1 | 1 | | | | |
| 29 | 90267–489U1 | RIVET,BLIND | 1 | 1 | | | | |
| 30 | F4P–U756C–01 | HOOK C | 1 | 1 | | | | |
| 31 | F2S–U7823–10 | SCREW | 1 | 1 | | | | |
| 32 | F2N–U142L–00 | NUT, LOCK | 1 | 1 | | | | |
| 33 | F4P–U377G–10 | ORNAMENT, SIDE RH | 1 | 1 | | | | FOR BLUE |
| | F4P–U377G–20 | ORNAMENT, SIDE RH | 1 | 1 | | | | FOR BLACK |
| 34 | F3X–U517E–00 | NUT | 4 | 4 | | | | |
| 35 | 90119–06892 | BOLT, WITH WASHER | 4 | 4 | | | | |
| 36 | F4P–U377J–00 | INNER, COVER SIDE 2 | 1 | 1 | | | | |

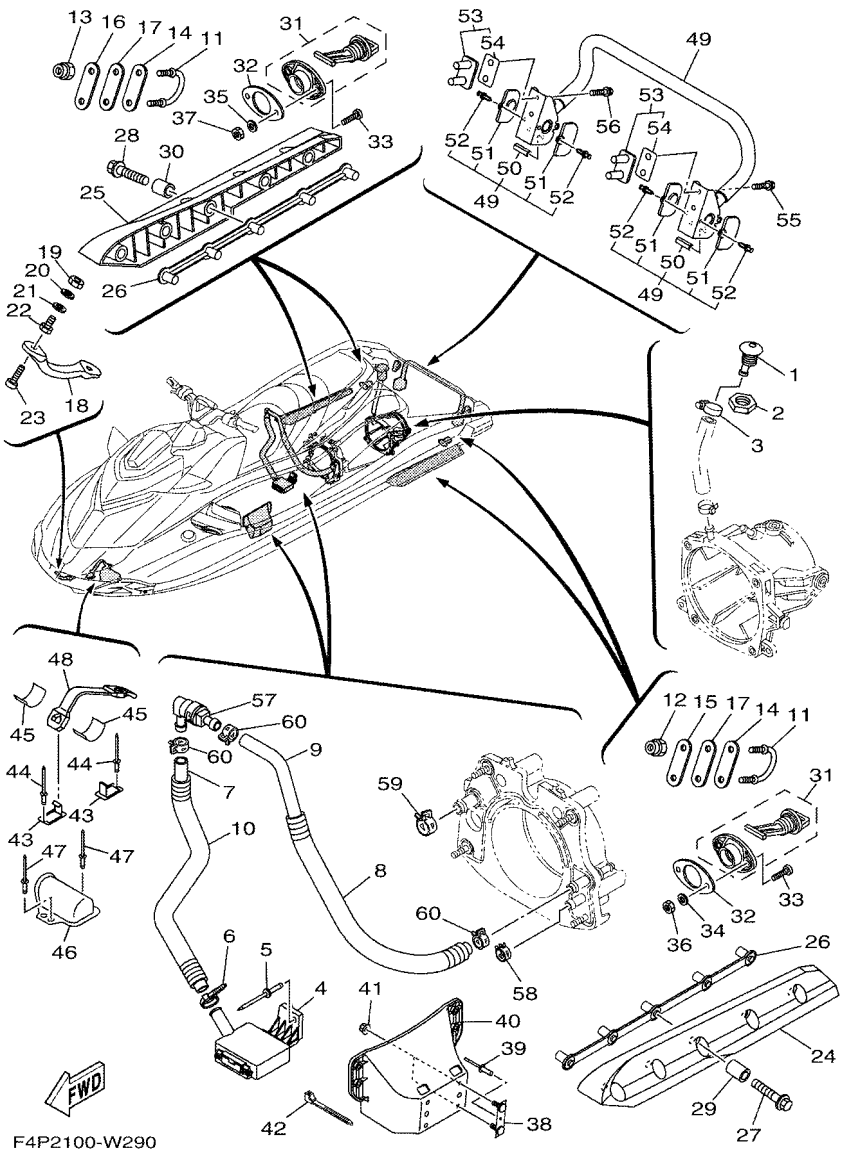


## FIG. 29 HULL & DECK

| REF. NO. | PART NO. | DESCRIPTION | CAN | EUR | | | | REMARKS |
|---|---|---|---|---|---|---|---|---|
| 1 | F1W–U269B–00 | SPOUT | 1 | 1 | | | | |
| 2 | EU0–61652–00 | NUT | 1 | 1 | | | | |
| 3 | 90601–118UF | BAND, HOSE 18 | 1 | 1 | | | | |
| 4 | F1B–U761D–02 | STRAINER, BILGE | 1 | 1 | | | | |
| 5 | 90267–489U8 | RIVET, BLIND | 1 | 1 | | | | |
| 6 | 90465–11829 | CLAMP | 1 | 1 | | | | |
| 7 | 90445–20804 | HOSE (L860) | 1 | 1 | | | | |
| 8 | 6EX–U773E–00 | TUBE,2 | 1 | 1 | | | | |
| 9 | 90445–20800 | HOSE (L500) | 1 | 1 | | | | |
| 10 | 6EX–U773D–00 | TUBE | 1 | 1 | | | | |
| 11 | F2N–U1628–02 | STERN EYE | 2 | 2 | | | | |
| 12 | 9572R–08300 | NUT, FLANGE | 2 | 2 | | | | |
| 13 | 9572R–08300 | NUT, FLANGE | 2 | 2 | | | | |
| 14 | GP7–U4953–10 | PLATE A | 2 | 2 | | | | |
| 15 | GP7–U4953–10 | PLATE A | 1 | 1 | | | | |
| 16 | GP7–U4953–10 | PLATE A | 1 | 1 | | | | |
| 17 | F1B–U1653–02 | PACKING | 2 | 2 | | | | |
| 18 | F1K–61624–00 | BOW EYE 1 | 1 | 1 | | | | |
| 19 | 99780–12600 | NUT.HEX.(COARS) | 2 | 2 | | | | |
| 20 | 92990–12200 | WASHER, PLAIN | 2 | 2 | | | | |
| 21 | F0X–61637–00 | WASHER | 2 | 2 | | | | |
| 22 | F0X–61652–01 | NUT | 2 | 2 | | | | |
| 23 | 90110–06040 | BOLT, HEXAGON SOCKET HEAD | 2 | 2 | | | | |
| 24 | F1S–U883N–01 | STABILIZER LH | 1 | 1 | | | | BLACK |
| 25 | F1S–U883P–01 | STABILIZER RH | 1 | 1 | | | | BLACK |
| 26 | F1X–U883T–01 | BRACKET,STABILIZER | 2 | 2 | | | | |
| 27 | 90105–08860 | BOLT, FLANGE | 5 | 5 | | | | |

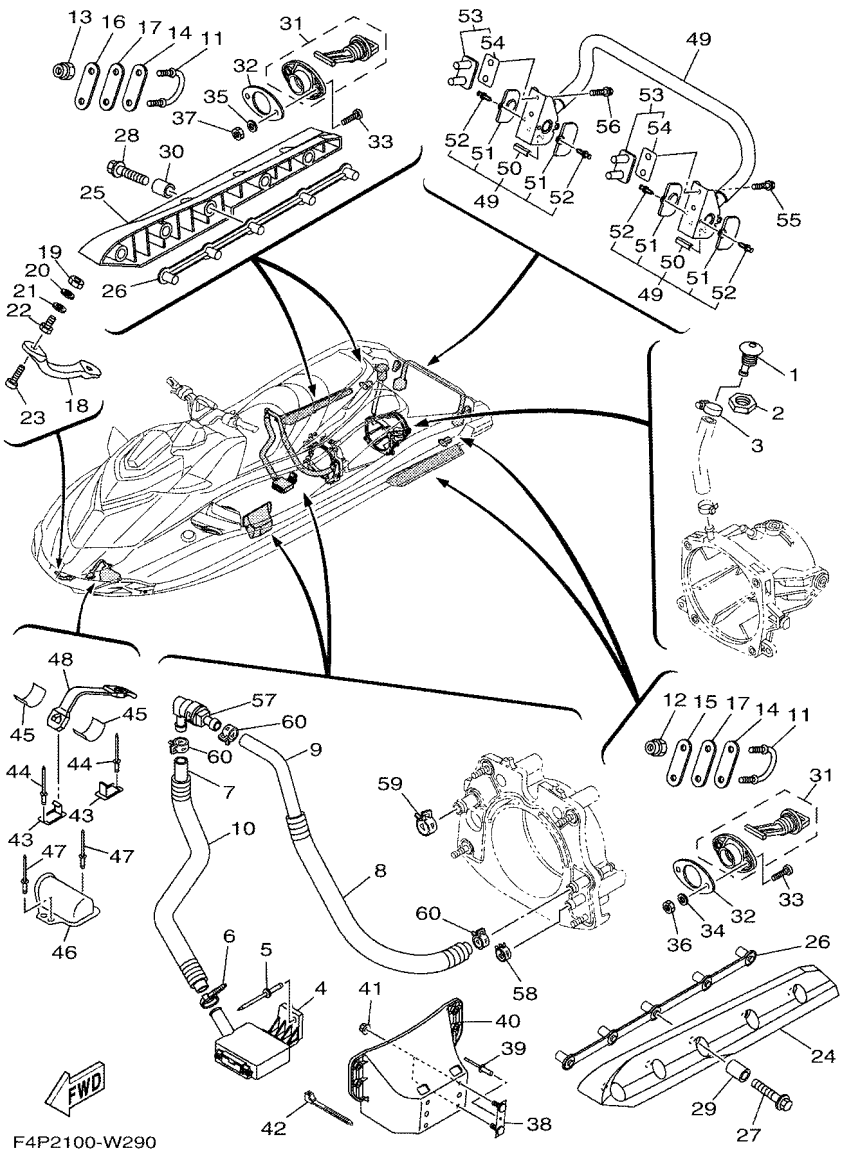


## FIG. 29 HULL & DECK

| REF. NO. | PART NO. | DESCRIPTION | CAN | EUR | | | | REMARKS |
|---|---|---|---|---|---|---|---|---|
| 28 | 90105–08860 | BOLT, FLANGE | 5 | 5 | | | | |
| 29 | F2N–U8169–10 | SPACER | 5 | 5 | | | | |
| 30 | F2N–U8169–10 | SPACER | 5 | 5 | | | | |
| 31 | F1S–U2280–02 | DRAIN PLUG ASSY. | 2 | 2 | | | | |
| 32 | F1S–U2285–00 | PACKING, DRAIN | 2 | 2 | | | | |
| 33 | 9788R–05025 | SCREW, PAN HEAD | 4 | 4 | | | | |
| 34 | 9299R–05200 | WASHER | 2 | 2 | | | | |
| 35 | 9299R–05200 | WASHER | 2 | 2 | | | | |
| 36 | 9572R–05300 | NUT, FLANGE | 2 | 2 | | | | |
| 37 | 9572R–05300 | NUT, FLANGE | 2 | 2 | | | | |
| 38 | F1K–U826C–03 | BRACKET | 2 | 2 | | | | |
| 39 | 90267–489U1 | RIVET,BLIND | 2 | 2 | | | | |
| 40 | F4P–U8572–00 | BRACKET 2 | 1 | 1 | | | | |
| 41 | F3Y–U142L–00 | NUT, LOCK | 4 | 4 | | | | |
| 42 | 90464–32801 | CLAMP | 1 | 1 | | | | |
| 43 | F1K–U5772–04 | HOOK A | 2 | 2 | | | | |
| 44 | 90267–489U1 | RIVET,BLIND | 2 | 2 | | | | |
| 45 | F1K–U759C–00 | MAT 2 | 2 | 2 | | | | |
| 46 | F2X–U5983–00 | BOX, FIRE EXTINGUISHER | 1 | 1 | | | | |
| 47 | 90267–48802 | RIVET, BLIND | 2 | 2 | | | | |
| 48 | F2P–U828K–00 | BAND 1 | 1 | 1 | | | | |
| 49 | F2X–U278A–00 | LADDER, STEP ASSY | 1 | 1 | | | | |
| 50 | F1W–U771H–00 | .SLEEVE 1 | 2 | 2 | | | | |
| 51 | F2C–U377H–00 | .INNER, COVER SIDE 1 | 4 | 4 | | | | |
| 52 | F2C–U1314–00 | .PIN | 4 | 4 | | | | |
| 53 | F2S–U278F–00 | BRACKET, LADDER LH | 2 | 2 | | | | |
| 54 | F2S–U278H–00 | .PACKING, BRKT. 1 | 1 | 1 | | | | |

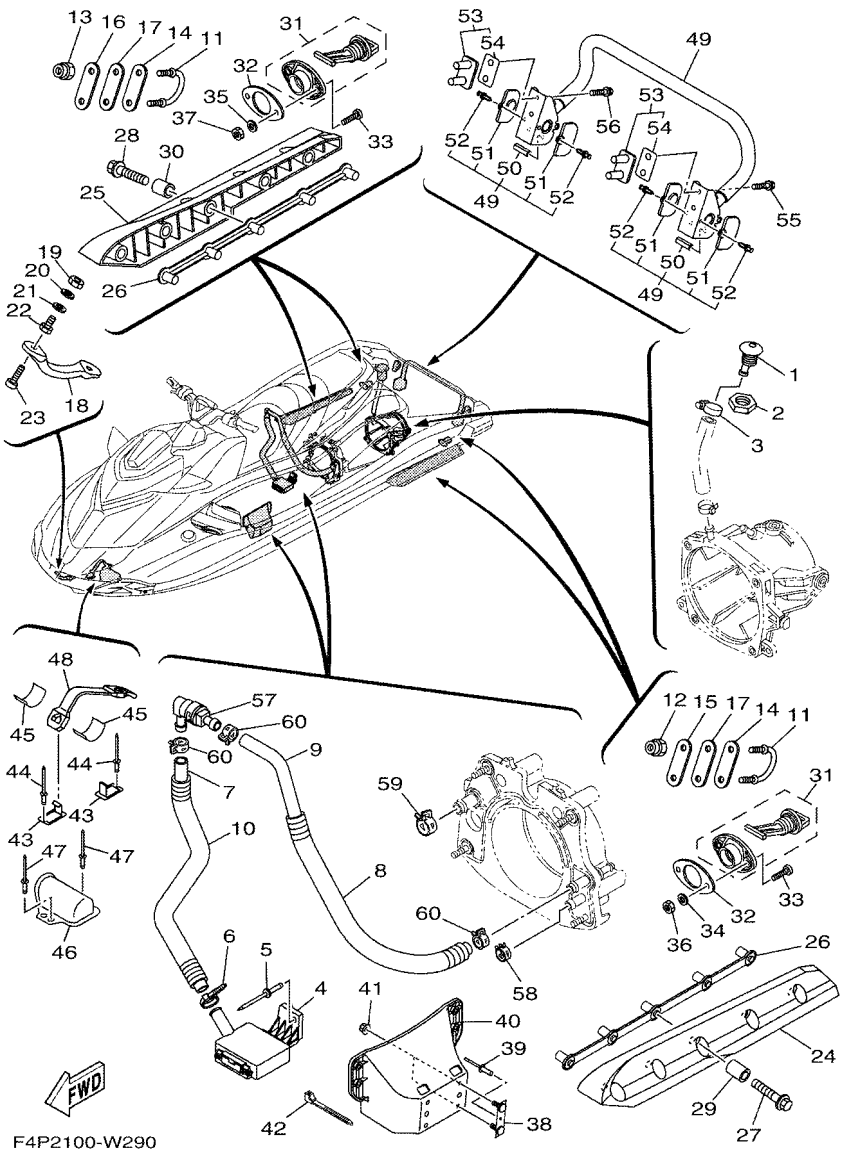


## FIG. 29 HULL & DECK

| REF. NO. | PART NO. | DESCRIPTION | CAN | EUR | | | | REMARKS |
|---|---|---|---|---|---|---|---|---|
| 55 | 90119–08861 | BOLT, WITH WASHER | 2 | 2 | | | | |
| 56 | 90119–08861 | BOLT, WITH WASHER | 2 | 2 | | | | |
| 57 | 68N–5112T–00 | JOINT, HOSE | 1 | 1 | | | | |
| 58 | 90467–200A3 | CLIP | 1 | 1 | | | | |
| 59 | 90467–240A3 | CLIP | 1 | 1 | | | | |
| 60 | 90467–180A5 | CLIP | 3 | 3 | | | | |

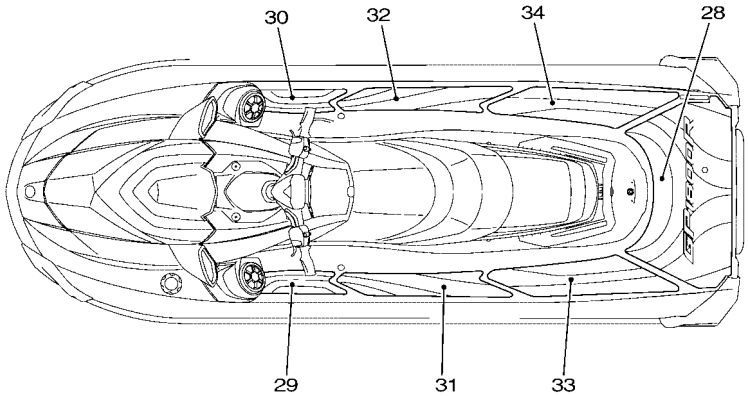


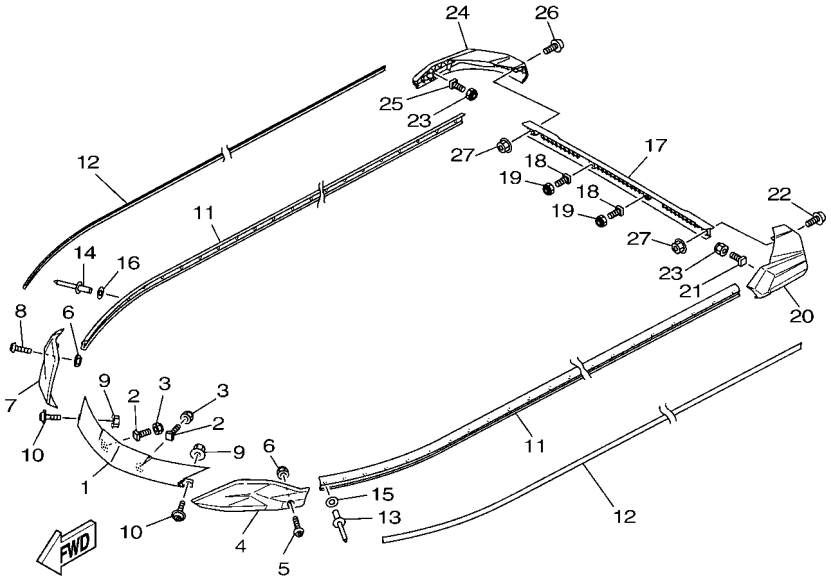


F4P2100-W300

## FIG. 30 GUNWALE & MAT

| REF. NO. | PART NO. | DESCRIPTION | CAN | EUR | | | | REMARKS |
|---|---|---|---|---|---|---|---|---|
| 1 | F4P–U2511–00 | GUNWALE, BOW | 1 | 1 | | | | BLACK |
| 2 | F1W–U491K–00 | BOLT, SPECIAL | 2 | 2 | | | | |
| 3 | F2N–U142L–00 | NUT, LOCK | 2 | 2 | | | | |
| 4 | F4P–U252E–00 | JOINT, GUNWALE LH | 1 | 1 | | | | BLACK |
| 5 | F4P–U7823–00 | SCREW | 1 | 1 | | | | |
| 6 | F2N–U142L–00 | NUT, LOCK | 2 | 2 | | | | |
| 7 | F4P–U252F–00 | JOINT, GUNWALE RH | 1 | 1 | | | | BLACK |
| 8 | F4P–U7823–00 | SCREW | 1 | 1 | | | | |
| 9 | F2N–U142L–00 | NUT, LOCK | 2 | 2 | | | | |
| 10 | F3X–U7823–12 | SCREW | 2 | 2 | | | | |
| 11 | F4P–U2512–00 | GUNWALE, SIDE | 2 | 2 | | | | BLACK |
| 12 | F4P–U2519–00 | INNER,GUNWALE | 2 | 2 | | | | WHITE FOR BLUE |
| | F4P–U2519–10 | INNER,GUNWALE | 2 | 2 | | | | GREEN FOR BLACK |
| 13 | 90267–489U8 | RIVET, BLIND | 15 | 15 | | | | |
| 14 | 90267–489U8 | RIVET, BLIND | 15 | 15 | | | | |
| 15 | 9299R–05200 | WASHER | 15 | 15 | | | | |
| 16 | 9299R–05200 | WASHER | 15 | 15 | | | | |
| 17 | F4P–U252C–00 | COVER, GUNWALE 1 | 1 | 1 | | | | BLACK |
| 18 | F1W–U491K–00 | BOLT, SPECIAL | 2 | 2 | | | | |
| 19 | F2N–U142L–00 | NUT, LOCK | 2 | 2 | | | | |
| 20 | F4P–U251D–00 | GUNWALE, STERN 1 | 1 | 1 | | | | BLACK |
| 21 | F1W–U491K–00 | BOLT, SPECIAL | 1 | 1 | | | | |
| 22 | F4P–U7823–00 | SCREW | 1 | 1 | | | | |
| 23 | F2N–U142L–00 | NUT, LOCK | 2 | 2 | | | | |
| 24 | F4P–U251E–00 | GUNWALE, STERN 2 | 1 | 1 | | | | BLACK |
| 25 | F1W–U491K–00 | BOLT, SPECIAL | 1 | 1 | | | | |
| 26 | F4P–U7823–00 | SCREW | 1 | 1 | | | | |

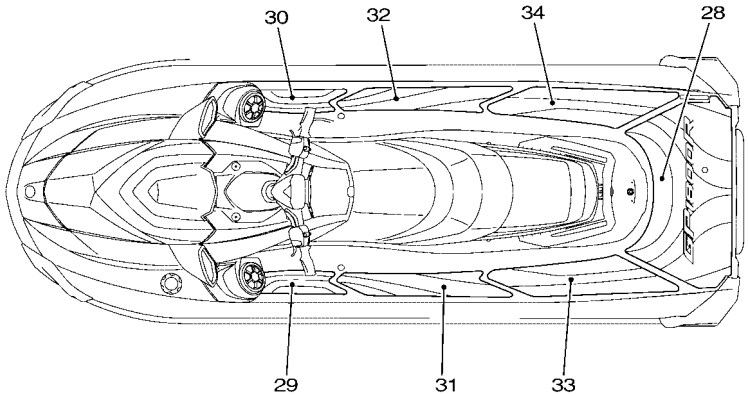


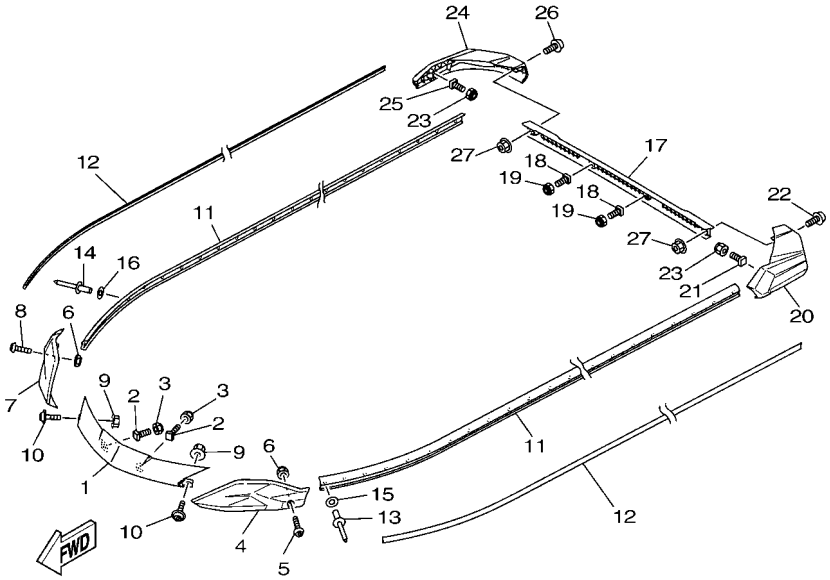


F4P2100-W300

## FIG. 30 GUNWALE & MAT

| REF. NO. | PART NO. | DESCRIPTION | CAN | EUR | | | | REMARKS |
|---|---|---|---|---|---|---|---|---|
| 27 | F2N–U142L–00 | NUT, LOCK | 2 | 2 | | | | |
| 28 | F4P–U3581–11 | MAT, UPPER | 1 | 1 | | | | BLACK/BLUE FOR BLUE |
| | F4P–U3581–02 | MAT, UPPER | 1 | 1 | | | | BLACK/GREY FOR BLACK |
| 29 | F4M–U351H–10 | MAT, STEP 1 | 1 | 1 | | | | BLACK/BLUE FOR BLUE |
| | F4M–U351H–00 | MAT, STEP 1 | 1 | 1 | | | | BLACK/GREY FOR BLACK |
| 30 | F4M–U351J–10 | MAT, STEP 2 | 1 | 1 | | | | BLACK/BLUE FOR BLUE |
| | F4M–U351J–00 | MAT, STEP 2 | 1 | 1 | | | | BLACK/GREY FOR BLACK |
| 31 | F4P–U351K–10 | MAT, STEP 3 | 1 | 1 | | | | BLACK/BLUE FOR BLUE |
| | F4P–U351K–01 | MAT, STEP 3 | 1 | 1 | | | | BLACK/GREY FOR BLACK |
| 32 | F4P–U351M–10 | MAT, STEP 4 | 1 | 1 | | | | BLACK/BLUE FOR BLUE |
| | F4P–U351M–01 | MAT, STEP 4 | 1 | 1 | | | | BLACK/GREY FOR BLACK |
| 33 | F4P–U351N–10 | MAT, STEP 5 | 1 | 1 | | | | BLACK/BLUE FOR BLUE |
| | F4P–U351N–01 | MAT, STEP 5 | 1 | 1 | | | | BLACK/GREY FOR BLACK |
| 34 | F4P–U351P–10 | MAT, STEP 6 | 1 | 1 | | | | BLACK/BLUE FOR BLUE |
| | F4P–U351P–01 | MAT, STEP 6 | 1 | 1 | | | | BLACK/GREY FOR BLACK |

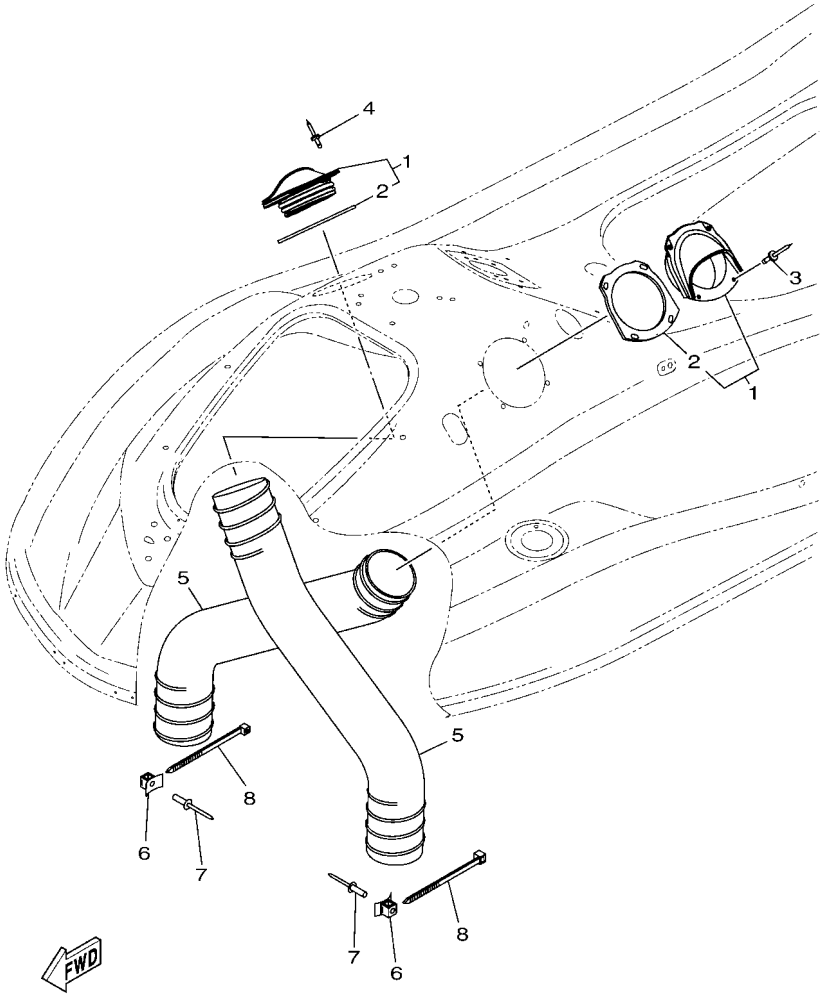


F4P1100-W300

## FIG. 31 VENTILATION

| REF. NO. | PART NO. | DESCRIPTION | CAN | EUR | | | | REMARKS |
|---|---|---|---|---|---|---|---|---|
| 1 | F2X–U2127–00 | BASE, AIR INTAKE | 2 | 2 | | | | |
| 2 | F2X–U2157–00 | .PACKING | 1 | 1 | | | | |
| 3 | 90267–48806 | RIVET, BLIND | 4 | 4 | | | | |
| 4 | 90267–48806 | RIVET, BLIND | 4 | 4 | | | | |
| 5 | F2N–U213G–02 | HOSE, VENTILATOR 2 | 2 | 2 | | | | |
| 6 | F1W–U828M–00 | BASE, CLAMP | 2 | 2 | | | | |
| 7 | 90267–48806 | RIVET, BLIND | 2 | 2 | | | | |
| 8 | 90464–99804 | CLAMP | 2 | 2 | | | | |

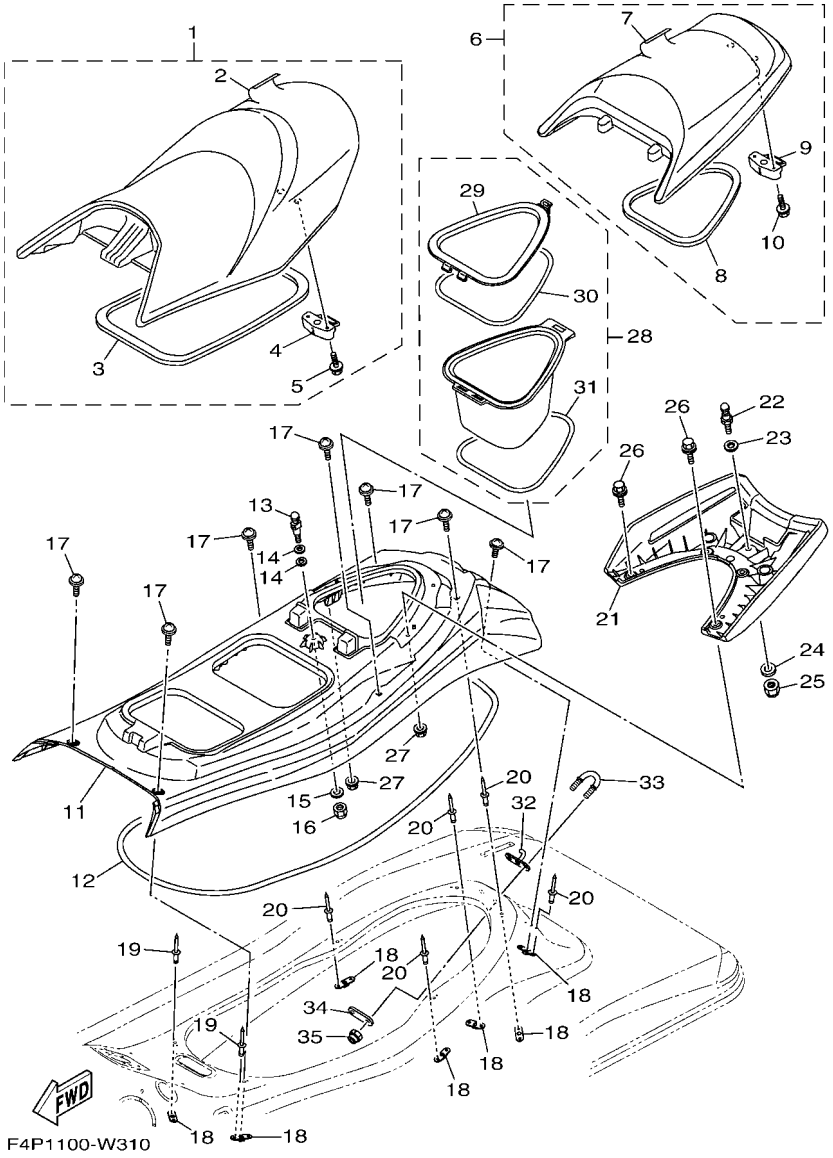


## FIG. 32 SEAT & UNDER LOCKER

| REF. NO. | PART NO. | DESCRIPTION | CAN | EUR | | | | REMARKS |
|---|---|---|---|---|---|---|---|---|
| 1 | F4P–U371A–00 | DOUBLE SEAT ASSY | 1 | 1 | | | | FOR BLUE |
| | F4P–U371A–10 | DOUBLE SEAT ASSY | 1 | 1 | | | | FOR BLACK |
| 2 | F4P–U371B–00 | .COVER, SEAT 1 | 1 | 1 | | | | FOR BLUE |
| | F4P–U371B–10 | .COVER, SEAT 1 | 1 | 1 | | | | FOR BLACK |
| 3 | F4P–U2664–00 | .PACKING | 1 | 1 | | | | |
| 4 | F2C–U3850–00 | .SEAT LOCK ASSY | 1 | 1 | | | | |
| 5 | 90119–069UP | .BOLT, WITH WASHER | 2 | 2 | | | | |
| 6 | F4P–U372A–00 | SINGLE SEAT ASSY | 1 | 1 | | | | FOR BLUE |
| | F4P–U372A–10 | SINGLE SEAT ASSY | 1 | 1 | | | | FOR BLACK |
| 7 | F4P–U372B–00 | .COVER, SEAT | 1 | 1 | | | | FOR BLUE |
| | F4P–U372B–10 | .COVER, SEAT | 1 | 1 | | | | FOR BLACK |
| 8 | F4P–U266D–00 | .PACKING 5 | 1 | 1 | | | | |
| 9 | F1B–U3850–02 | .SEAT LOCK ASSY | 1 | 1 | | | | |
| 10 | 90119–069UP | .BOLT, WITH WASHER | 2 | 2 | | | | |
| 11 | F4P–U3743–00 | BASE, SEAT 2 | 1 | 1 | | | | |
| 12 | F4P–U266B–00 | PACKING 3 | 1 | 1 | | | | |
| 13 | GH1–U3774–00 | PIN | 1 | 1 | | | | |
| 14 | 90201–109U6 | WASHER, PLATE | 2 | 2 | | | | |
| 15 | 9299R–10200 | WASHER | 1 | 1 | | | | |
| 16 | 9572R–10300 | NUT, NYLON | 1 | 1 | | | | |
| 17 | F3Y–U491K–02 | BOLT, SPECIAL | 7 | 7 | | | | |
| 18 | F2C–U826C–00 | BRACKET | 7 | 7 | | | | |
| 19 | F4P–U516R–00 | RIVET 1 | 4 | 4 | | | | |
| 20 | 90267–489U1 | RIVET,BLIND | 10 | 10 | | | | |
| 21 | F4P–U271B–00 | GRIP, HAND | 1 | 1 | | | | |
| 22 | GH1–U3774–00 | PIN | 1 | 1 | | | | |
| 23 | 90201–109U6 | WASHER, PLATE | 1 | 1 | | | | |

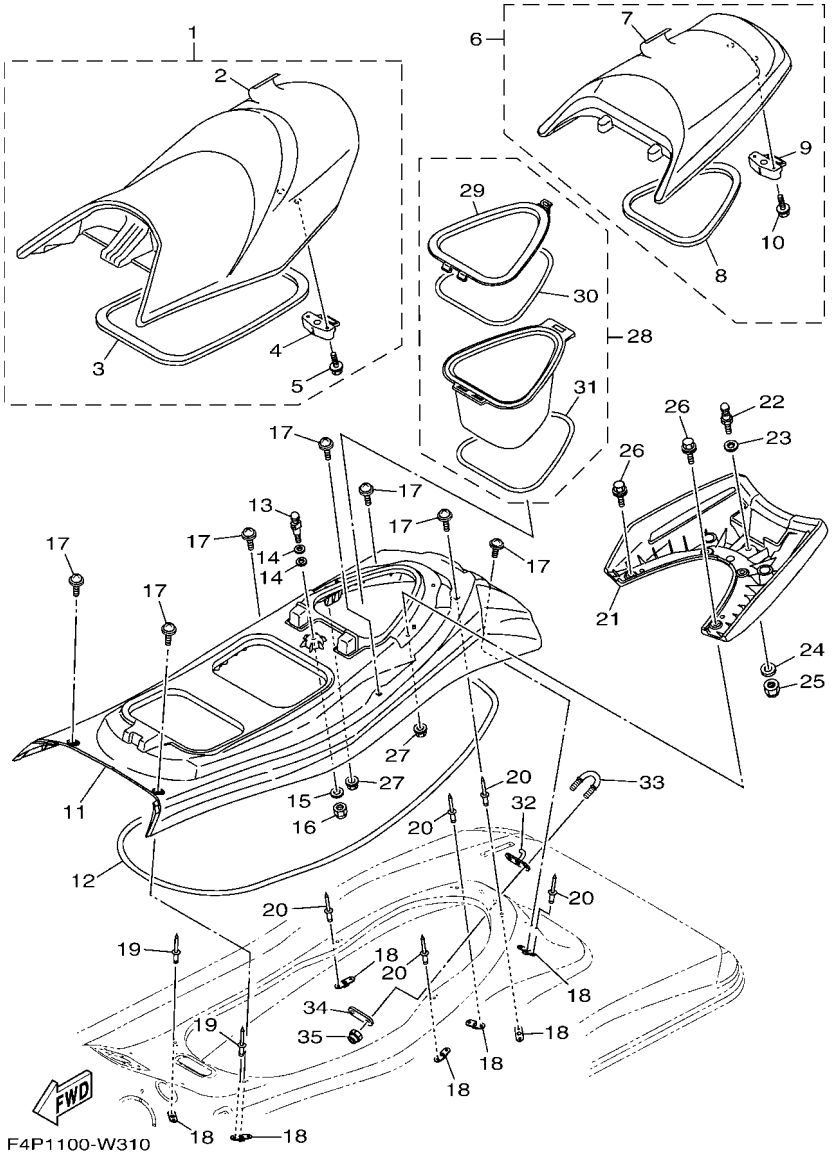


## FIG. 32 SEAT & UNDER LOCKER

| REF. NO. | PART NO. | DESCRIPTION | CAN | EUR | | | | REMARKS |
|---|---|---|---|---|---|---|---|---|
| 24 | 9299R–10200 | WASHER | 1 | 1 | | | | |
| 25 | 9572R–10300 | NUT, NYLON | 1 | 1 | | | | |
| 26 | 90119–08829 | BOLT, WITH WASHER | 4 | 4 | | | | |
| 27 | F3Y–U142L–00 | NUT, LOCK | 4 | 4 | | | | |
| 28 | F4P–U591A–00 | CASE ASSY 1 | 1 | 1 | | | | |
| 29 | F4P–U591C–00 | .CAP,CASE | 1 | 1 | | | | |
| 30 | F4P–U591D–00 | .PACKING,CASE | 1 | 1 | | | | |
| 31 | F4P–U266E–00 | .PACKING,6 | 1 | 1 | | | | |
| 32 | F4G–U372G–00 | EYELET | 1 | 1 | | | | |
| 33 | F2N–U1628–02 | STERN EYE | 1 | 1 | | | | |
| 34 | GP7–U4953–10 | PLATE A | 1 | 1 | | | | |
| 35 | 9572R–08300 | NUT, FLANGE | 2 | 2 | | | | |

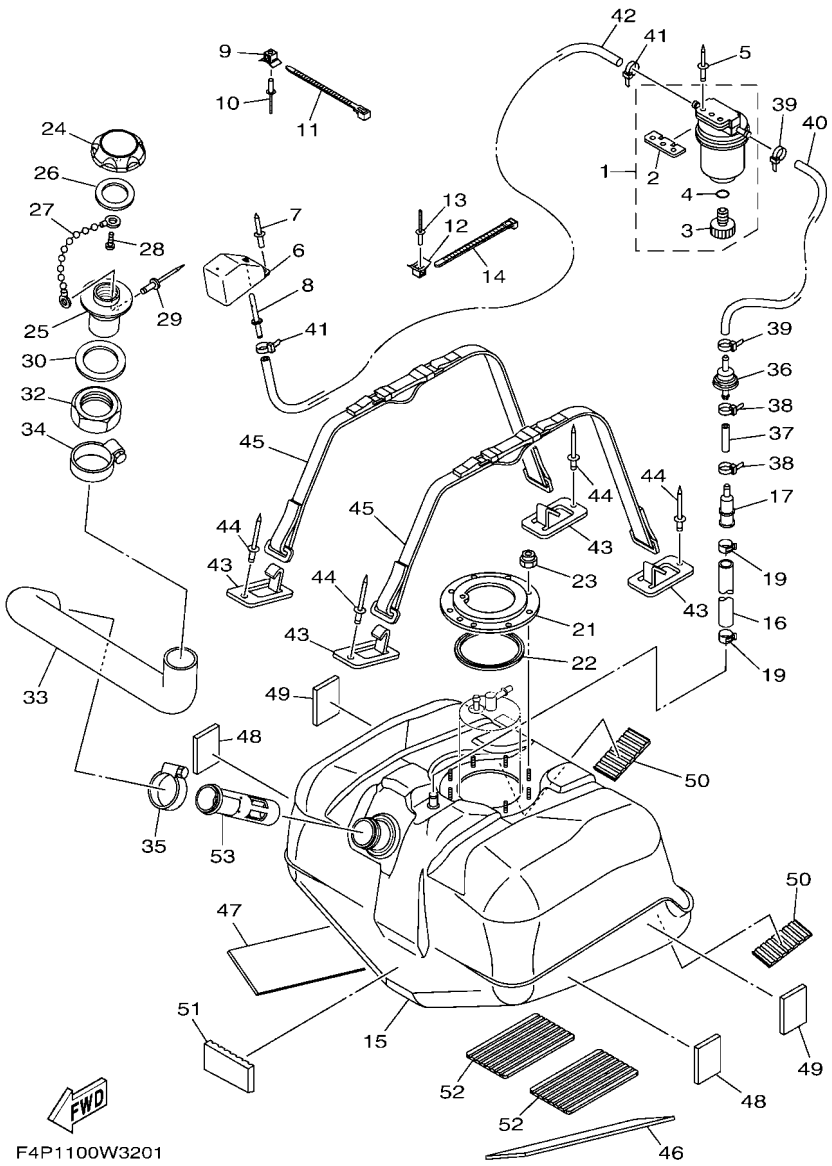


## FIG. 33 FUEL TANK

| REF. NO. | PART NO. | DESCRIPTION | CAN | EUR | | | | REMARKS |
|---|---|---|---|---|---|---|---|---|
| 1 | F2F–6214A–00 | FILTER, VENT ASSY | 1 | 1 | | | | |
| 2 | EW2–62142–00 | .PLATE, FILTER | 1 | 1 | | | | |
| 3 | 70R–24543–00 | .PLUG, DRAIN | 1 | 1 | | | | |
| 4 | 70R–24489–00 | .O-RING | 1 | 1 | | | | |
| 5 | 90267–489U2 | RIVET, BLIND | 2 | 2 | | | | |
| 6 | GP7–62159–02 | SOCKET, VENTILATION | 1 | 1 | | | | |
| 7 | 90267–489U6 | RIVET, BLIND | 2 | 2 | | | | |
| 8 | F1G–62149–00 | PIPE, VENTILATION | 1 | 1 | | | | |
| 9 | F1W–U828M–00 | BASE, CLAMP | 1 | 1 | | | | |
| 10 | 90267–48806 | RIVET, BLIND | 1 | 1 | | | | |
| 11 | 90464–32801 | CLAMP | 1 | 1 | | | | |
| 12 | F1W–U828M–00 | BASE, CLAMP | 1 | 1 | | | | |
| 13 | 90267–48806 | RIVET, BLIND | 1 | 1 | | | | |
| 14 | 90464–32801 | CLAMP | 1 | 1 | | | | |
| 15 | F4P–U7711–00 | TANK, FUEL | 1 | 1 | | | | |
| 16 | F4P–U785G–00 | HOSE, AIR VENT | 1 | 1 | | | | |
| 17 | F4P–U8167–10 | CONNECTOR | 1 | 1 | | | | |
| 19 | 90467–190A2 | CLIP | 2 | 2 | | | | |
| 21 | F1B–U7773–00 | RING | 1 | 1 | | | | |
| 22 | F1B–67747–00 | PACKING, SEAL | 1 | 1 | | | | |
| 23 | 9572R–06300 | NUT, NYLON | 9 | 9 | | | | |
| 24 | F2N–U7831–10 | CAP, FUEL FILLER | 1 | 1 | | | | BLACK |
| 25 | GP7–U7833–11 | SOCKET | 1 | 1 | | | | |
| 26 | GP7–U7832–01 | PACKING | 1 | 1 | | | | |
| 27 | GP7–U7835–00 | CHAIN BALL | 1 | 1 | | | | |
| 28 | 90169–049U1 | TAPPING SCREW | 1 | 1 | | | | |
| 29 | 90267–329UR | RIVET, BLIND | 1 | 1 | | | | |

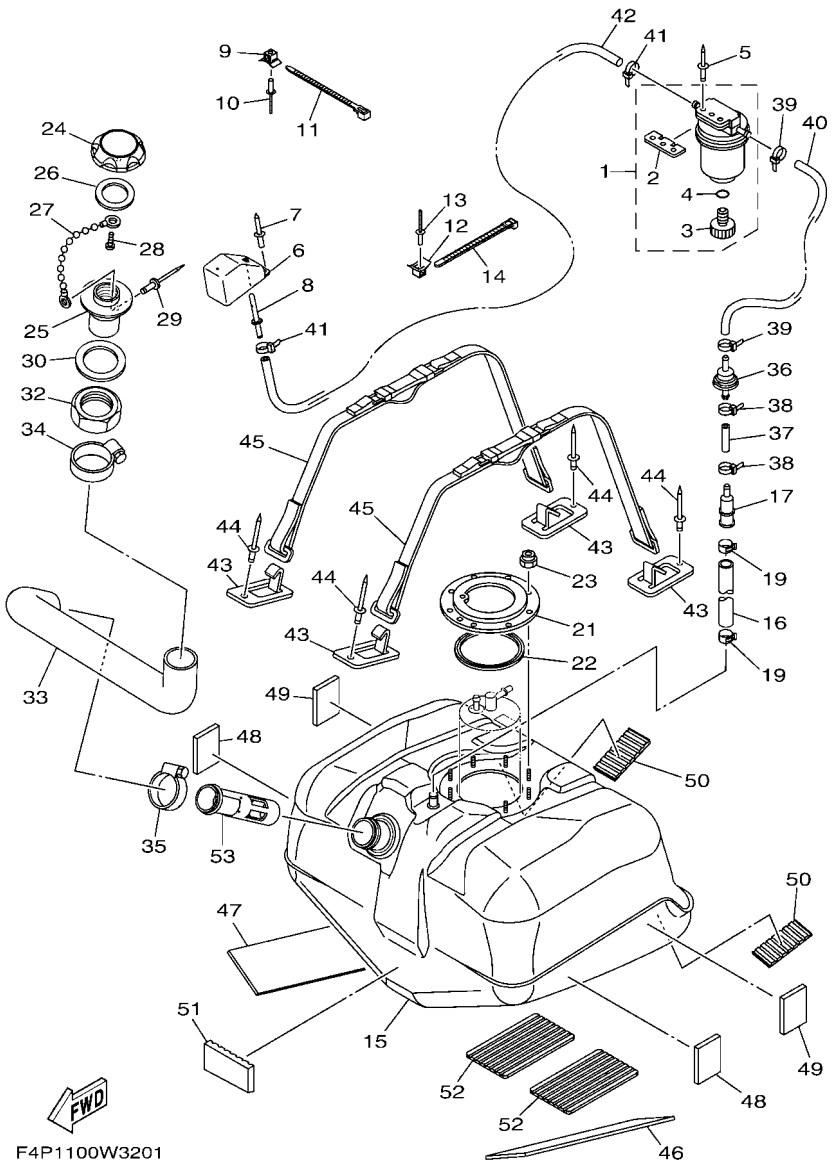


## FIG. 33 FUEL TANK

| REF. NO. | PART NO. | DESCRIPTION | CAN | EUR | | | | REMARKS |
|---|---|---|---|---|---|---|---|---|
| 30 | GP7–U7834–10 | PACKING FUEL FILLER | 1 | 1 | | | | |
| 32 | GP7–U783F–00 | NUT, FUEL FILLER | 1 | 1 | | | | |
| 33 | F4P–U7844–01 | HOSE | 1 | 1 | | | | |
| 34 | 90601–155U4 | BAND, HOSE 55 | 1 | 1 | | | | |
| 35 | 90601–155U4 | BAND, HOSE 55 | 1 | 1 | | | | |
| 36 | F3Y–U7767–00 | CHECK VALVE | 1 | 1 | | | | |
| 37 | GP7–U785H–00 | HOSE, AIR VENT 3 | 1 | 1 | | | | |
| 38 | 90465–11829 | CLAMP | 2 | 2 | | | | |
| 39 | 90465–11829 | CLAMP | 2 | 2 | | | | |
| 40 | F1K–U785G–00 | HOSE, AIR VENT | 1 | 1 | | | | |
| 41 | 90465–11829 | CLAMP | 2 | 2 | | | | |
| 42 | F0D–U7856–10 | HOSE, AIR VENT 3 | 1 | 1 | | | | |
| 43 | F1K–U5772–04 | HOOK A | 4 | 4 | | | | |
| 44 | 90267–489U1 | RIVET,BLIND | 4 | 4 | | | | |
| 45 | F2S–67743–01 | BELT, TANK 1 | 2 | 2 | | | | |
| 46 | F2S–U759B–00 | MAT 1 | 1 | 1 | | | | |
| 47 | F2S–U759B–00 | MAT 1 | 1 | 1 | | | | |
| 48 | F1W–U759C–01 | MAT 2 | 2 | 2 | | | | |
| 49 | F1W–U759C–01 | MAT 2 | 2 | 2 | | | | |
| 50 | F1K–U759C–00 | MAT 2 | 2 | 2 | | | | |
| 51 | F1K–U759C–00 | MAT 2 | 1 | 1 | | | | |
| 52 | F1S–U8221–00 | PAD, BATTERY | 2 | 2 | | | | |
| 53 | F4L–U773D–00 | TUBE | 1 | 1 | | | | |

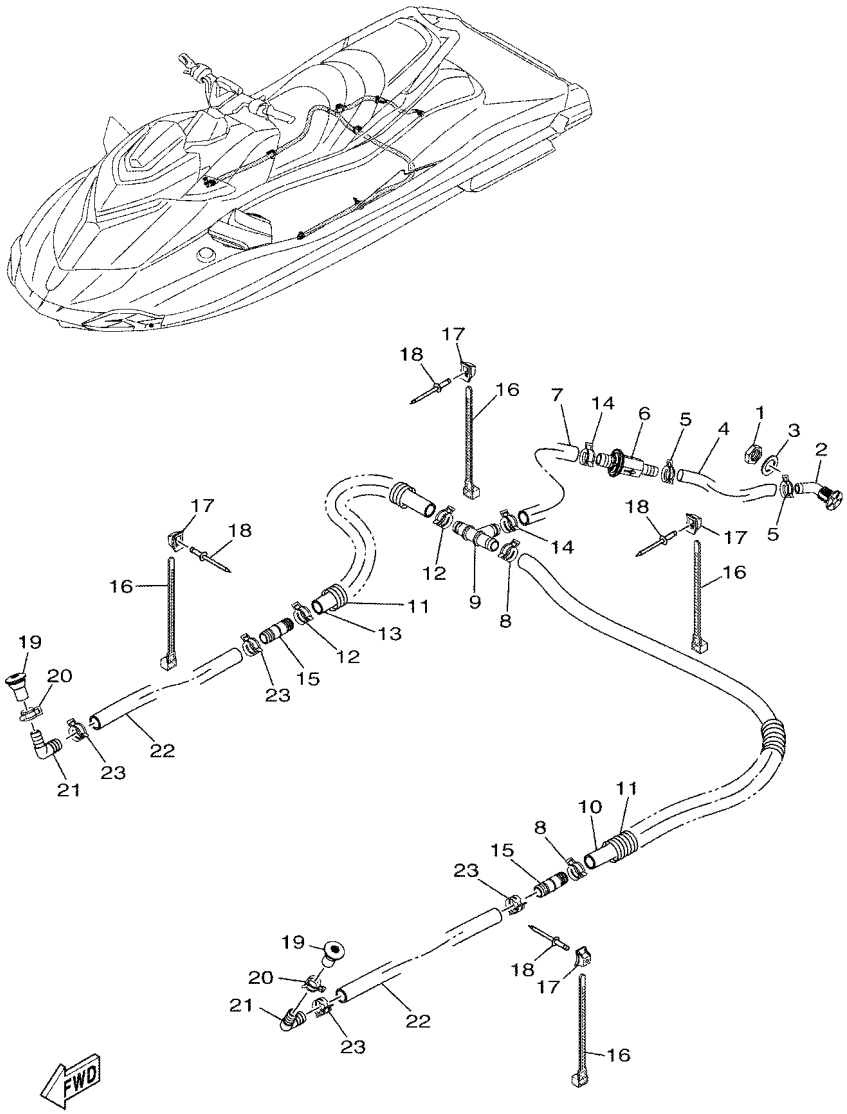


## FIG. 34 BILGE PUMP

| REF. NO. | PART NO. | DESCRIPTION | CAN | EUR | | | | REMARKS |
|---|---|---|---|---|---|---|---|---|
| 1 | F3X–U224B–00 | NUT, DRAIN 1 | 1 | 1 | | | | |
| 2 | F3X–U224C–00 | BODY, DRAIN 1 | 1 | 1 | | | | |
| 3 | F3X–U7564–00 | GASKET | 1 | 1 | | | | |
| 4 | F4P–U7628–00 | HOSE, DRAIN 3 | 1 | 1 | | | | |
| 5 | 90467–17802 | CLIP | 2 | 2 | | | | |
| 6 | F3X–U7767–00 | CHECK VALVE | 1 | 1 | | | | |
| 7 | F4P–U7626–00 | HOSE 1 | 1 | 1 | | | | |
| 8 | 90601–200U1 | BAND | 2 | 2 | | | | |
| 9 | F3X–U7857–00 | JOINT,HOSE | 1 | 1 | | | | |
| 10 | F4P–U7629–01 | HOSE, DRAIN 2 | 1 | 1 | | | | |
| 11 | 6EX–U773D–00 | TUBE | 2 | 2 | | | | |
| 12 | 90601–200U1 | BAND | 2 | 2 | | | | |
| 13 | F4P–U2249–01 | HOSE, DRAIN | 1 | 1 | | | | |
| 14 | 90601–200U1 | BAND | 2 | 2 | | | | |
| 15 | F3X–U7617–00 | JOINT, DRAIN | 2 | 2 | | | | |
| 16 | 90464–32801 | CLAMP | 4 | 4 | | | | |
| 17 | F1W–U828M–00 | BASE, CLAMP | 4 | 4 | | | | |
| 18 | 90267–48802 | RIVET, BLIND | 4 | 4 | | | | |
| 19 | F4P–U2255–00 | PLUG,DRAIN | 2 | 2 | | | | |
| 20 | 90601–200U1 | BAND | 2 | 2 | | | | |
| 21 | F3X–U8377–00 | CONNECTOR | 2 | 2 | | | | |
| 22 | F4P–U7626–00 | HOSE 1 | 2 | 2 | | | | |
| 23 | 90601–200U1 | BAND | 4 | 4 | | | | |

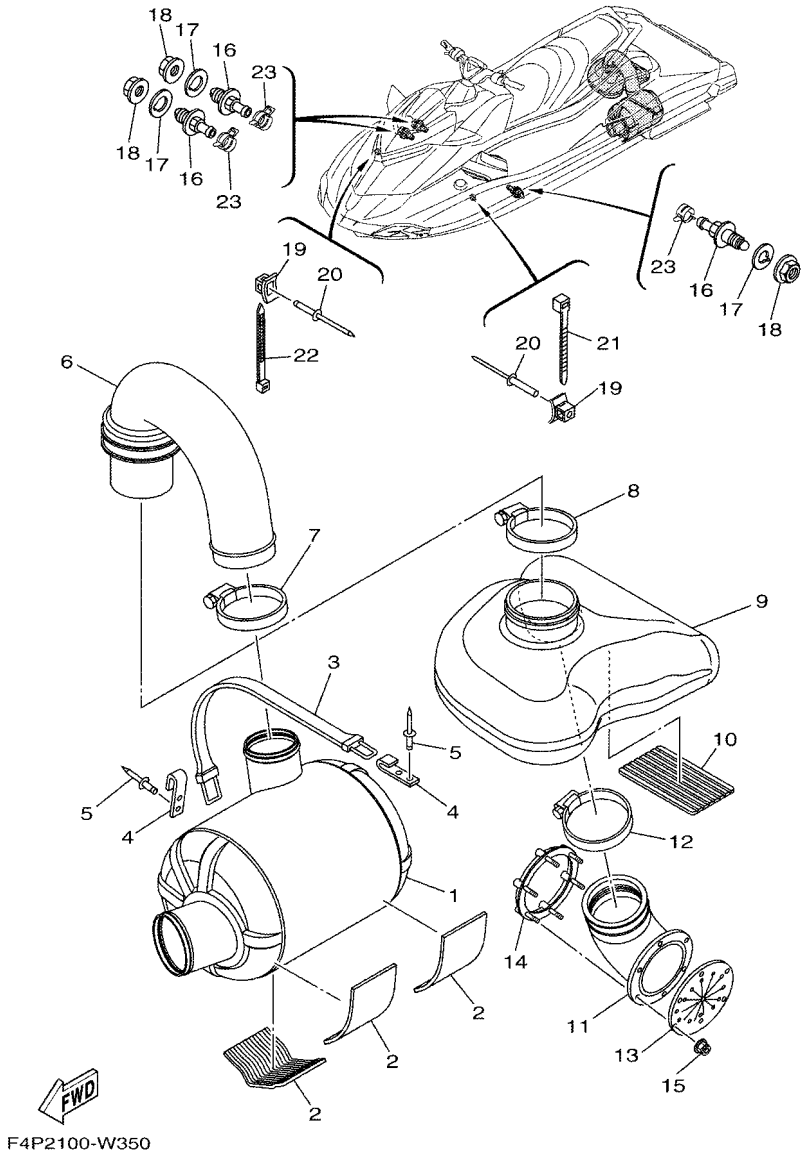


## FIG. 35 EXHAUST 3

| REF. NO. | PART NO. | DESCRIPTION | CAN | EUR | | | | REMARKS |
|---|---|---|---|---|---|---|---|---|
| 1 | F4P–U7550–00 | WATER LOCK COMP. | 1 | 1 | | | | |
| 2 | F1S–U8221–00 | PAD, BATTERY | 3 | 3 | | | | |
| 3 | EW2–67821–00 | BAND, FUEL TANK | 1 | 1 | | | | |
| 4 | GA7–65772–00 | HOOK A | 2 | 2 | | | | |
| 5 | 90267–489U1 | RIVET,BLIND | 4 | 4 | | | | |
| 6 | F4P–U7555–00 | HOSE, EXHAUST | 1 | 1 | | | | |
| 7 | 90450–99801 | HOSE CLAMP ASSY | 1 | 1 | | | | |
| 8 | 90450–99804 | HOSE CLAMP ASSY | 1 | 1 | | | | |
| 9 | F3X–U4261–00 | TANK, WATER | 1 | 1 | | | | |
| 10 | F1S–U8221–00 | PAD, BATTERY | 1 | 1 | | | | |
| 11 | F3X–U758D–00 | HOSE,EXHAUST 3 | 1 | 1 | | | | |
| 12 | 90450–99801 | HOSE CLAMP ASSY | 1 | 1 | | | | |
| 13 | F1B–U751G–10 | VALVE, EXHAUST | 1 | 1 | | | | |
| 14 | F1S–U757B–01 | PLATE | 1 | 1 | | | | |
| 15 | F2N–U142L–00 | NUT, LOCK | 6 | 6 | | | | |
| 16 | F2C–U753B–01 | PILOT, WATER | 3 | 3 | | | | |
| 17 | F2C–U7564–00 | GASKET | 3 | 3 | | | | |
| 18 | F2C–U2733–00 | NUT | 3 | 3 | | | | |
| 19 | F1W–U828M–00 | BASE, CLAMP | 2 | 2 | | | | |
| 20 | 90267–48806 | RIVET, BLIND | 2 | 2 | | | | |
| 21 | 90464–32801 | CLAMP | 1 | 1 | | | | |
| 22 | 90601–200U2 | BAND | 1 | 1 | | | | |
| 23 | 90467–150A5 | CLIP | 3 | 3 | | | | |

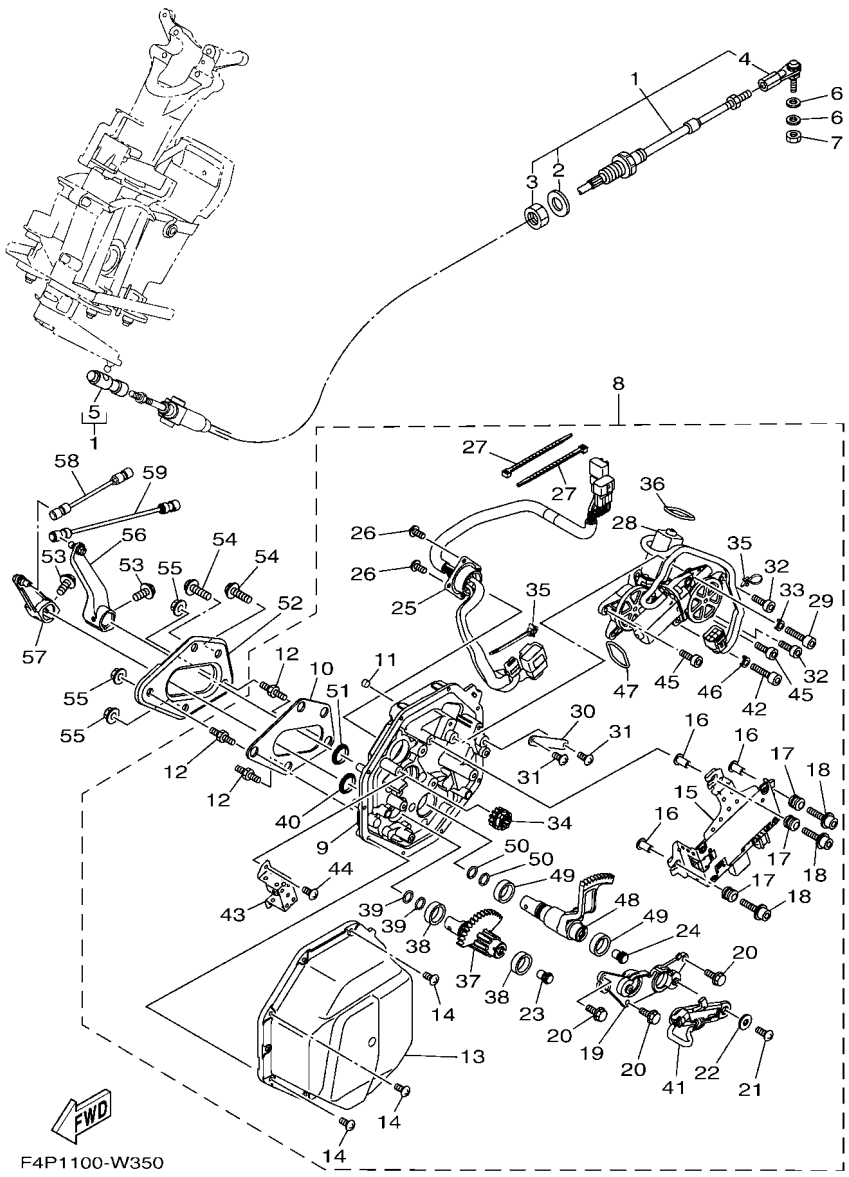


## FIG. 36 CONTROL CABLE

| REF. NO. | PART NO. | DESCRIPTION | CAN | EUR | | | | REMARKS |
|---|---|---|---|---|---|---|---|---|
| 1 | F1S–61481–11 | CABLE, STEERING | 1 | 1 | | | | |
| 2 | F1B–61438–00 | .PACKING C | 1 | 1 | | | | |
| 3 | F1B–6151S–00 | .NUT | 1 | 1 | | | | |
| 4 | F1B–61461–02 | .STUD, JOINT BALL | 1 | 1 | | | | |
| 5 | F2N–61460–00 | .BALL JOINT ASSY | 1 | 1 | | | | |
| 6 | 90201–06906 | WASHER, PLATE | 2 | 2 | | | | |
| 7 | 9538R–06700 | NUT | 1 | 1 | | | | |
| 8 | F4P–6140B–02 | MOTOR ASSY. | 1 | 1 | | | | |
| 9 | F4P–6152K–00 | .HOUSING | 1 | 1 | | | | |
| 10 | F3J–63262–00 | .SEAL | 1 | 1 | | | | |
| 11 | F3J–613D0–00 | .PLUG | 1 | 1 | | | | |
| 12 | F3J–67369–00 | .BOLT, STUD | 3 | 3 | | | | |
| 13 | F3Y–6143J–00 | .COVER | 1 | 1 | | | | |
| 14 | F3Y–68198–00 | .SCREW | 10 | 10 | | | | |
| 15 | F4P–68197–00 | .CONTROL UNIT | 1 | 1 | | | | |
| 16 | 90387–06119 | .COLLAR | 3 | 3 | | | | |
| 17 | 6A0–82317–01 | .DAMPER, IGNITION COIL | 3 | 3 | | | | |
| 18 | F3J–613B4–20 | .BOLT | 3 | 3 | | | | |
| 19 | F4P–61256–00 | .PLATE | 1 | 1 | | | | |
| 20 | F3J–613B3–00 | .BOLT, HEXAGON | 3 | 3 | | | | |
| 21 | F3J–68198–20 | .SCREW | 2 | 2 | | | | |
| 22 | F3J–613C3–10 | .WASHER, PLAIN | 2 | 2 | | | | |
| 23 | F3J–60428–00 | .MAGNET, SENSOR | 1 | 1 | | | | |
| 24 | F3J–60428–00 | .MAGNET, SENSOR | 1 | 1 | | | | |
| 25 | F4P–68270–00 | .WIRE HARNESS ASSY. | 1 | 1 | | | | |
| 26 | F3J–68198–00 | .SCREW | 4 | 4 | | | | |
| 27 | F3J–68273–00 | .CLAMP | 2 | 2 | | | | |

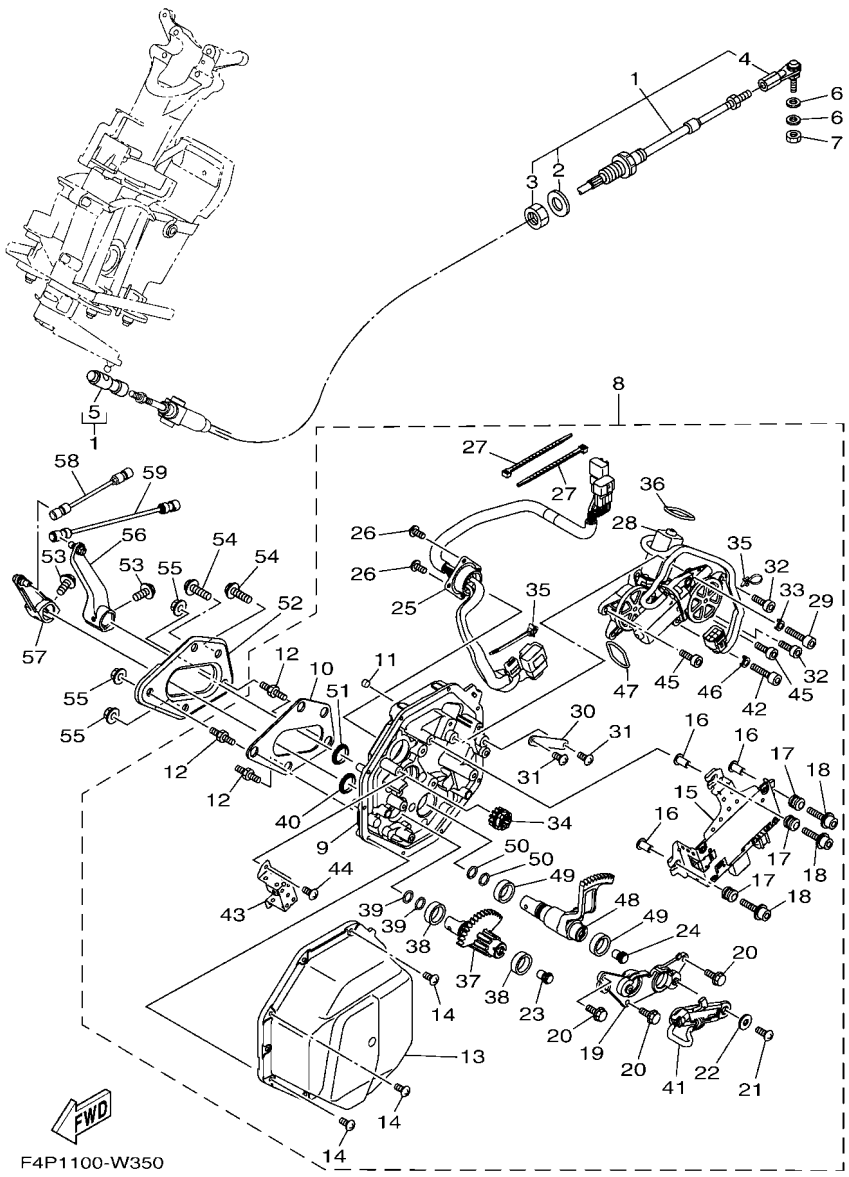


## FIG. 36 CONTROL CABLE

| REF. NO. | PART NO. | DESCRIPTION | CAN | EUR | | | | REMARKS |
|---|---|---|---|---|---|---|---|---|
| 28 | F4P–68352–00 | .MOTOR | 1 | 1 | | | | |
| 29 | F3J–613B4–00 | .BOLT | 1 | 1 | | | | |
| 30 | F3Y–61348–00 | .PLATE | 1 | 1 | | | | |
| 31 | F3J–68198–20 | .SCREW | 2 | 2 | | | | |
| 32 | F3J–613B4–10 | .BOLT | 2 | 2 | | | | |
| 33 | F3J–61492–00 | .SPACER | 1 | 1 | | | | |
| 34 | F4P–60211–00 | .GEAR 1 | 1 | 1 | | | | |
| 35 | F4P–68273–00 | .CLAMP | 2 | 2 | | | | |
| 36 | F4P–613A5–10 | .O-RING | 1 | 1 | | | | |
| 37 | F3Y–60221–10 | .SHAFT, 1 | 1 | 1 | | | | |
| 38 | F3Y–61344–00 | .BUSH | 2 | 2 | | | | |
| 39 | F4P–613A5–00 | .O-RING | 2 | 2 | | | | |
| 40 | F4P–61344–00 | .BUSH | 1 | 1 | | | | |
| 41 | F4P–85887–00 | .SENSOR ANGLE | 1 | 1 | | | | |
| 42 | F3J–613B4–00 | .BOLT | 1 | 1 | | | | |
| 43 | F4P–61348–00 | .PLATE | 1 | 1 | | | | |
| 44 | F3J–68198–20 | .SCREW | 2 | 2 | | | | |
| 45 | F3J–613B4–10 | .BOLT | 2 | 2 | | | | |
| 46 | F3J–61492–00 | .SPACER | 1 | 1 | | | | |
| 47 | F4P–613A5–10 | .O-RING | 1 | 1 | | | | |
| 48 | F4P–60222–00 | .SHAFT, 2 | 1 | 1 | | | | |
| 49 | F3Y–61344–00 | .BUSH | 2 | 2 | | | | |
| 50 | F4P–613A5–00 | .O-RING | 2 | 2 | | | | |
| 51 | F4P–61344–00 | .BUSH | 1 | 1 | | | | |
| 52 | F4P–U8285–00 | PLATE | 1 | 1 | | | | |
| 53 | 90119–06893 | BOLT, WITH WASHER | 2 | 2 | | | | |
| 54 | 90119–08851 | BOLT, WITH WASHER | 2 | 2 | | | | |

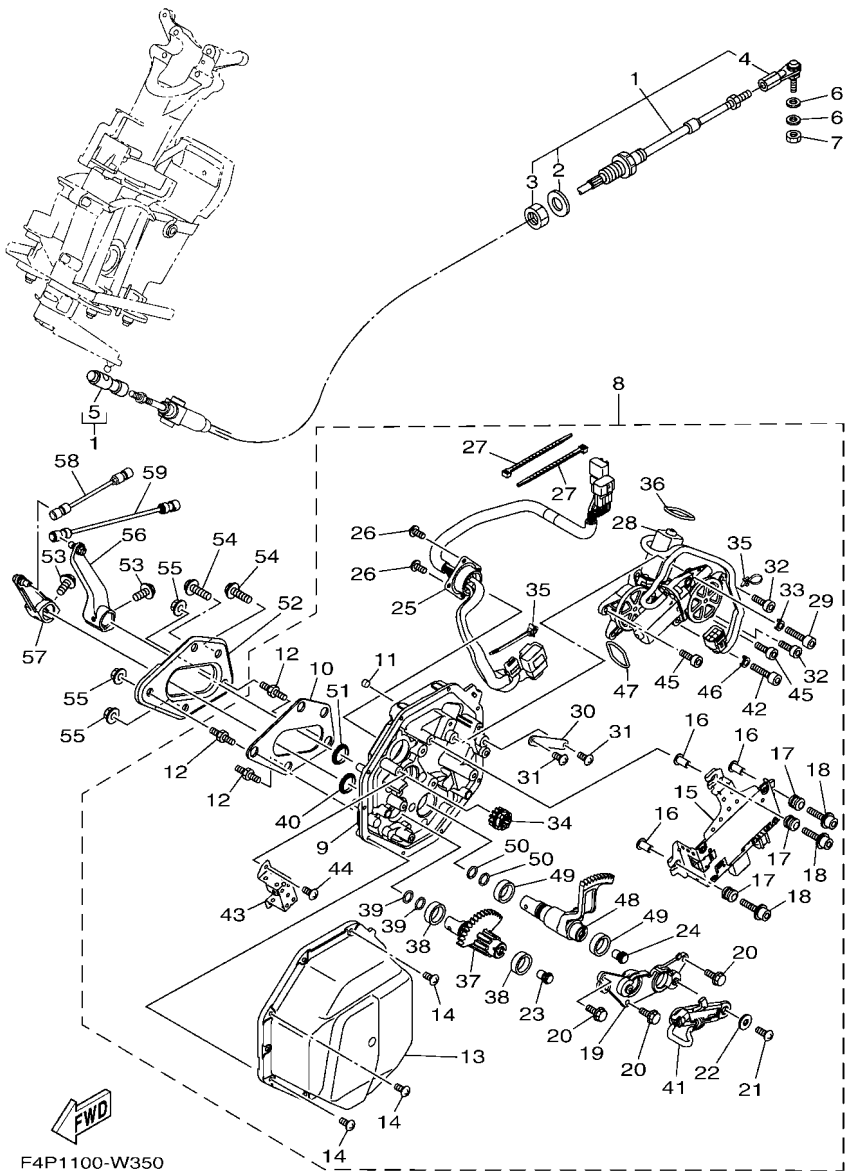


## FIG. 36 CONTROL CABLE

| REF. NO. | PART NO. | DESCRIPTION | CAN | EUR | | | | REMARKS |
|---|---|---|---|---|---|---|---|---|
| 55 | F3Y–U142L–00 | NUT, LOCK | 3 | 3 | | | | |
| 56 | F4P–6150E–00 | TRIM ARM ASSY | 1 | 1 | | | | |
| 57 | F3Y–6150F–00 | SHIFT ARM ASSY | 1 | 1 | | | | |
| 58 | F3J–6150A–00 | ROD ASSY | 1 | 1 | | | | |
| 59 | F3J–6150D–00 | ROD ASSY 2 | 1 | 1 | | | | |

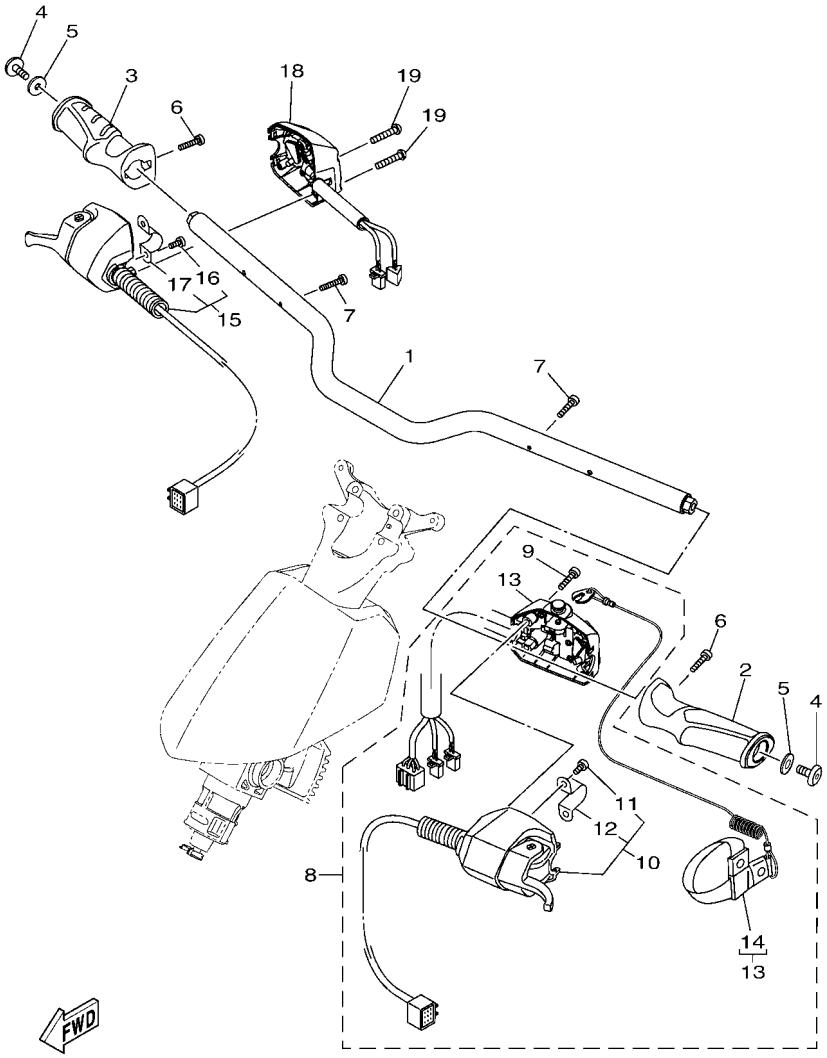


F4P1100-W360

## FIG. 37 STEERING 1

| REF. NO. | PART NO. | DESCRIPTION | CAN | EUR | | | | REMARKS |
|---|---|---|---|---|---|---|---|---|
| 1 | F4P–U1552–10 | HANDLE | 1 | 1 | | | | |
| 2 | F4P–U155C–10 | GRIP,HANDLE | 1 | 1 | | | | FOR BLUE |
| | F4P–U155C–00 | GRIP,HANDLE | 1 | 1 | | | | FOR BLACK |
| 3 | F4P–U155D–10 | GRIP, HANDLE | 1 | 1 | | | | FOR BLUE |
| | F4P–U155D–00 | GRIP, HANDLE | 1 | 1 | | | | FOR BLACK |
| 4 | 90110–06382 | BOLT, HEXAGON SOCKET HEAD | 2 | 2 | | | | |
| 5 | 90201–068G0 | WASHER, PLATE | 2 | 2 | | | | |
| 6 | F2S–U1516–00 | BOLT | 2 | 2 | | | | |
| 7 | 91380–04030 | BOLT | 2 | 2 | | | | |
| 8 | F4P–68310–01 | SWITCH BOX ASSY | 1 | 1 | | | | |
| 9 | 6CS–6725F–00 | .BOLT, THROTTLE | 2 | 2 | | | | |
| 10 | F4P–26411–01 | .SHIFT LEVER ASSY | 1 | 1 | | | | |
| 11 | F4P–6725F–00 | ..BOLT, THROTTLE | 2 | 2 | | | | |
| 12 | F4P–61368–00 | ..SUPPORT | 1 | 1 | | | | |
| 13 | F4P–8259E–00 | .SWITCH ASSY | 1 | 1 | | | | |
| 14 | EW2–68348–00 | ..LANYARD, STOP SWITCH | 1 | 1 | | | | |
| 15 | F4P–14305–01 | THROTTLE LEVER COMP | 1 | 1 | | | | |
| 16 | F4P–6725F–00 | .BOLT, THROTTLE | 2 | 2 | | | | |
| 17 | F4P–61368–00 | .SUPPORT | 1 | 1 | | | | |
| 18 | F4P–81860–00 | SWITCH ASSY | 1 | 1 | | | | |
| 19 | 6CS–6725F–00 | BOLT, THROTTLE | 2 | 2 | | | | |

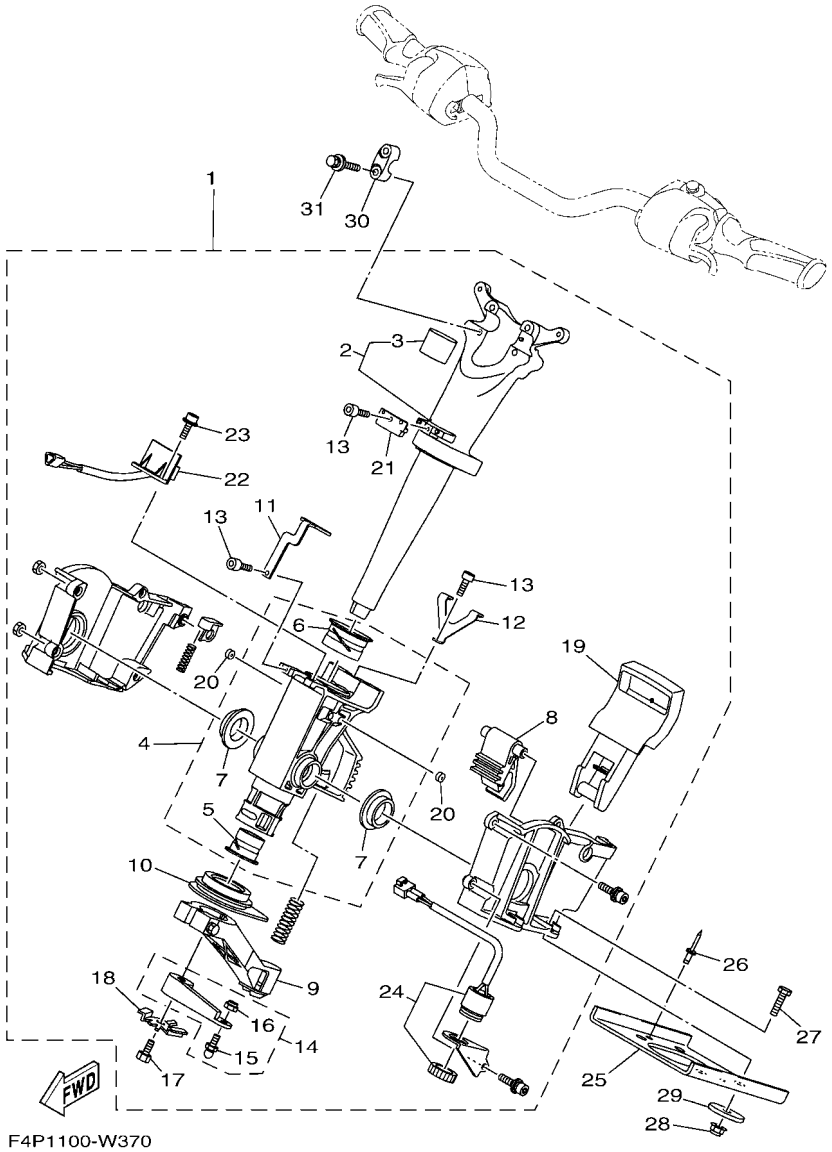


## FIG. 38 STEERING 2

| REF. NO. | PART NO. | DESCRIPTION | CAN | EUR | | | | REMARKS |
|---|---|---|---|---|---|---|---|---|
| 1 | F4P–61400–01 | STEERING MASTER ASSY | 1 | 1 | | | | |
| 2 | F4P–67410–00 | .SHAFT ASSY | 1 | 1 | | | | |
| 3 | F4P–61435–00 | ..PIPE, SEAL | 1 | 1 | | | | |
| 4 | F4P–6773D–00 | .TUBE | 1 | 1 | | | | |
| 5 | F1S–6134M–00 | ..BUSH | 1 | 1 | | | | |
| 6 | F2C–6134M–00 | ..BUSH | 1 | 1 | | | | |
| 7 | F1S–6134M–10 | ..BUSH | 2 | 2 | | | | |
| 8 | F1S–61782–00 | .LOCK 1 | 1 | 1 | | | | |
| 9 | F1S–6146A–00 | .CABLE STOPPER ASSY. | 1 | 1 | | | | |
| 10 | F1S–6143C–00 | .SEAL, RUBBER | 1 | 1 | | | | |
| 11 | F4P–65938–00 | .STAY 1 | 1 | 1 | | | | |
| 12 | F4P–65939–00 | .STAY 2 | 1 | 1 | | | | |
| 13 | F4P–613C1–00 | .SCREW | 4 | 4 | | | | |
| 14 | F1S–6153R–01 | .ARM ASSY. | 1 | 1 | | | | |
| 15 | EU0–61461–02 | ..STUD, JOINT BALL | 1 | 1 | | | | |
| 16 | 95720–06300 | ..NUT, SELF-LOCKING | 1 | 1 | | | | |
| 17 | F1W–61355–00 | .BOLT | 1 | 1 | | | | |
| 18 | F1W–6142B–00 | .PLATE, RETAINING | 1 | 1 | | | | |
| 19 | F4P–6151M–00 | .LEVER ASSY | 1 | 1 | | | | |
| 20 | F1W–6358B–00 | .PLUG | 4 | 4 | | | | |
| 21 | F2X–6838C–01 | .MAGNET | 1 | 1 | | | | |
| 22 | F2X–6838B–02 | .SENSOR, MAGNET | 1 | 1 | | | | |
| 23 | F1W–61516–00 | .BOLT | 5 | 5 | | | | |
| 24 | F1S–68341–00 | .BUZZER | 1 | 1 | | | | |
| 25 | F1X–U1554–00 | PLATE, RETAINING | 1 | 1 | | | | |
| 26 | 90267–489U6 | RIVET, BLIND | 2 | 2 | | | | |
| 27 | 97080–08035 | BOLT | 4 | 4 | | | | |

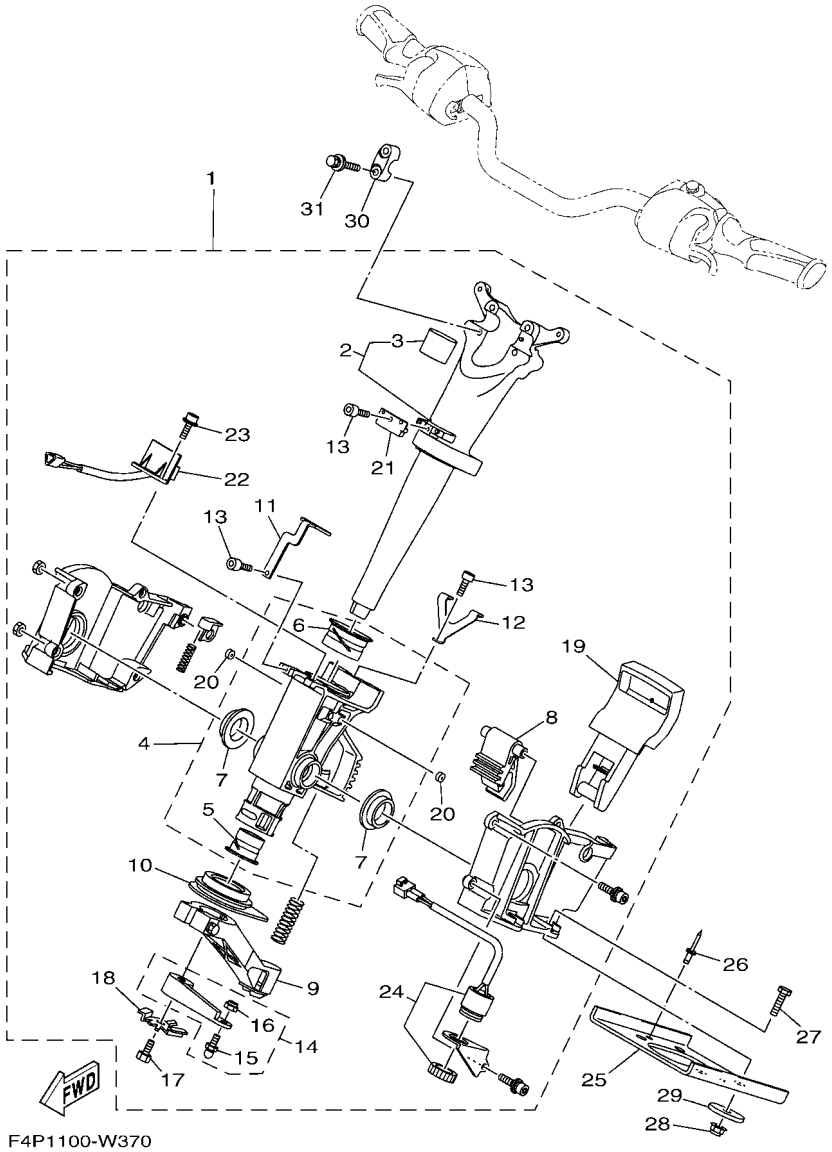


## FIG. 38 STEERING 2

| REF. NO. | PART NO. | DESCRIPTION | CAN | EUR | | | | REMARKS |
|---|---|---|---|---|---|---|---|---|
| 28 | F3Y–U142L–00 | NUT, LOCK | 4 | 4 | | | | |
| 29 | F1W–U725E–00 | WASHER | 4 | 4 | | | | |
| 30 | EU0–23814–31 | HOLDER, HANDLE UPPER | 2 | 2 | | | | |
| 31 | 90119–089UU | BOLT, WITH WASHER | 4 | 4 | | | | |

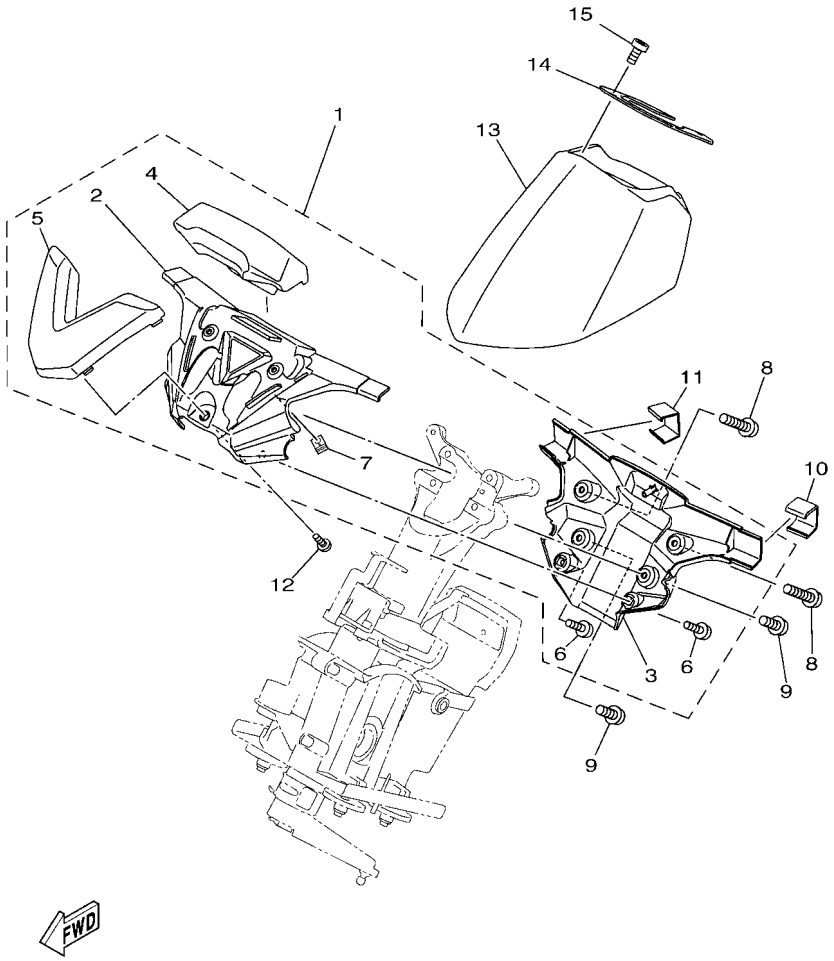


F4P2100-W390

## FIG. 39 STEERING 3

| REF. NO. | PART NO. | DESCRIPTION | CAN | EUR | | | | REMARKS |
|---|---|---|---|---|---|---|---|---|
| 1 | F4P–U142A–00 | STEERING PAD COMP | 1 | 1 | | | | |
| 2 | F4P–U143D–00 | .PAD, STEERING 1 | 1 | 1 | | | | |
| 3 | F4P–U143E–00 | .PAD, STEERING 2 | 1 | 1 | | | | |
| 4 | F4P–U142D–00 | .COVER, PAD | 1 | 1 | | | | |
| 5 | F4P–U142M–00 | .BASE, PAD | 1 | 1 | | | | |
| 6 | F2S–U13C1–00 | .SCREW | 3 | 3 | | | | |
| 7 | F3X–U517E–00 | .NUT | 2 | 2 | | | | |
| 8 | F3X–U7823–12 | SCREW | 2 | 2 | | | | |
| 9 | F3Y–U2624–00 | BOLT | 2 | 2 | | | | |
| 10 | F4P–U153K–00 | CLIP | 1 | 1 | | | | |
| 11 | F4P–U153K–10 | CLIP | 1 | 1 | | | | |
| 12 | F2S–U13C1–00 | SCREW | 3 | 3 | | | | |
| 13 | F4P–U143L–00 | PAD, STEERING 3 | 1 | 1 | | | | |
| 14 | F4P–U1421–00 | PAD, STEERING | 1 | 1 | | | | |
| 15 | 90154–06017 | SCREW, BINDING | 4 | 4 | | | | |

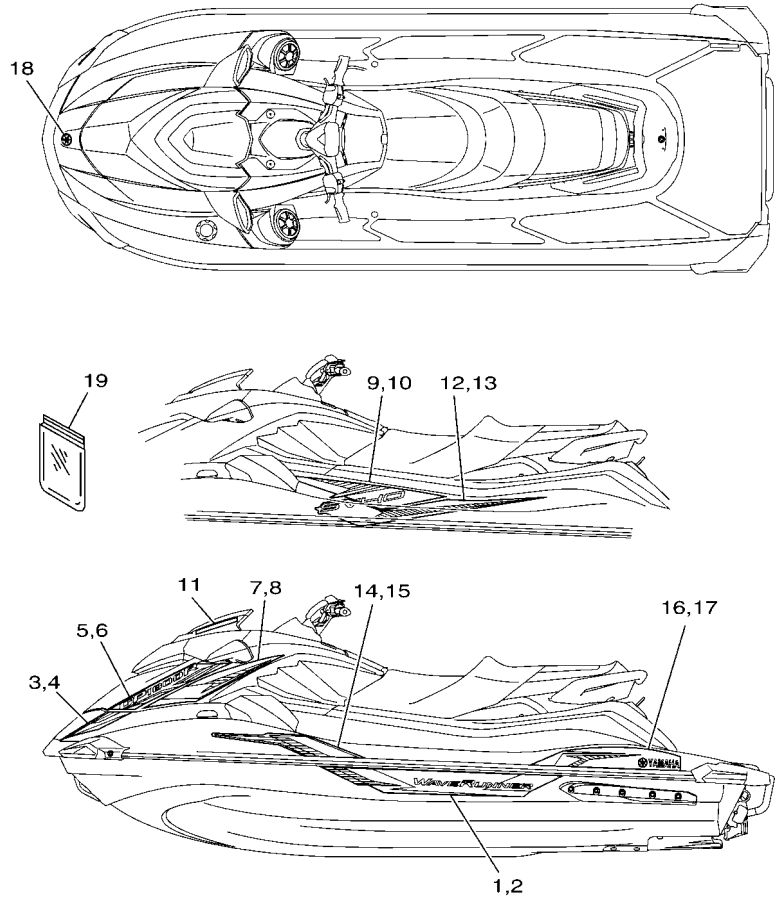


F4P2100-W400

## FIG. 40 GRAPHICS

| REF. NO. | PART NO. | DESCRIPTION | CAN | EUR | | | | REMARKS |
|---|---|---|---|---|---|---|---|---|
| 1 | F4P–U417B–00 | GRAPHIC 1 (LH) | 1 | 1 | | | | FOR BLUE |
| | F4P–U417B–10 | GRAPHIC 1 (LH) | 1 | 1 | | | | FOR BLACK |
| 2 | F4P–U417C–00 | GRAPHIC 2 (RH) | 1 | 1 | | | | FOR BLUE |
| | F4P–U417C–10 | GRAPHIC 2 (RH) | 1 | 1 | | | | FOR BLACK |
| 3 | F4P–U417D–00 | GRAPHIC 3 (LH) | 1 | 1 | | | | FOR BLUE |
| | F4P–U417D–10 | GRAPHIC 3 (LH) | 1 | 1 | | | | FOR BLACK |
| 4 | F4P–U417E–00 | GRAPHIC 4 (RH) | 1 | 1 | | | | FOR BLUE |
| | F4P–U417E–10 | GRAPHIC 4 (RH) | 1 | 1 | | | | FOR BLACK |
| 5 | F4P–U417F–00 | GRAPHIC 5 (LH) | 1 | 1 | | | | FOR BLUE |
| | F4P–U417F–10 | GRAPHIC 5 (LH) | 1 | 1 | | | | FOR BLACK |
| 6 | F4P–U417G–00 | GRAPHIC 6 (RH) | 1 | 1 | | | | FOR BLUE |
| | F4P–U417G–10 | GRAPHIC 6 (RH) | 1 | 1 | | | | FOR BLACK |
| 7 | F4P–U417H–00 | GRAPHIC 7 (LH) | 1 | 1 | | | | FOR BLUE |
| | F4P–U417H–10 | GRAPHIC 7 (LH) | 1 | 1 | | | | FOR BLACK |
| 8 | F4P–U417J–00 | GRAPHIC 8 (RH) | 1 | 1 | | | | FOR BLUE |
| | F4P–U417J–10 | GRAPHIC 8 (RH) | 1 | 1 | | | | FOR BLACK |
| 9 | F4P–U417K–00 | GRAPHIC 9 (LH) | 1 | 1 | | | | FOR BLUE |
| | F4P–U417K–10 | GRAPHIC 9 (LH) | 1 | 1 | | | | FOR BLACK |
| 10 | F4P–U417L–00 | GRAPHIC B (RH) | 1 | 1 | | | | FOR BLUE |
| | F4P–U417L–10 | GRAPHIC B (RH) | 1 | 1 | | | | FOR BLACK |
| 11 | F4P–U417M–00 | GRAPHIC C | 2 | 2 | | | | FOR BLUE |
| | F4P–U417M–10 | GRAPHIC C | 2 | 2 | | | | FOR BLACK |
| 12 | F4P–U417P–00 | GRAPHIC E (LH) | 1 | 1 | | | | FOR BLUE |
| | F4P–U417P–10 | GRAPHIC E (LH) | 1 | 1 | | | | FOR BLACK |
| 13 | F4P–U417R–00 | GRAPHIC F (RH) | 1 | 1 | | | | FOR BLUE |
| | F4P–U417R–10 | GRAPHIC F (RH) | 1 | 1 | | | | FOR BLACK |
| 14 | F4P–U417S–00 | GRAPHIC G (LH) | 1 | 1 | | | | FOR BLUE |

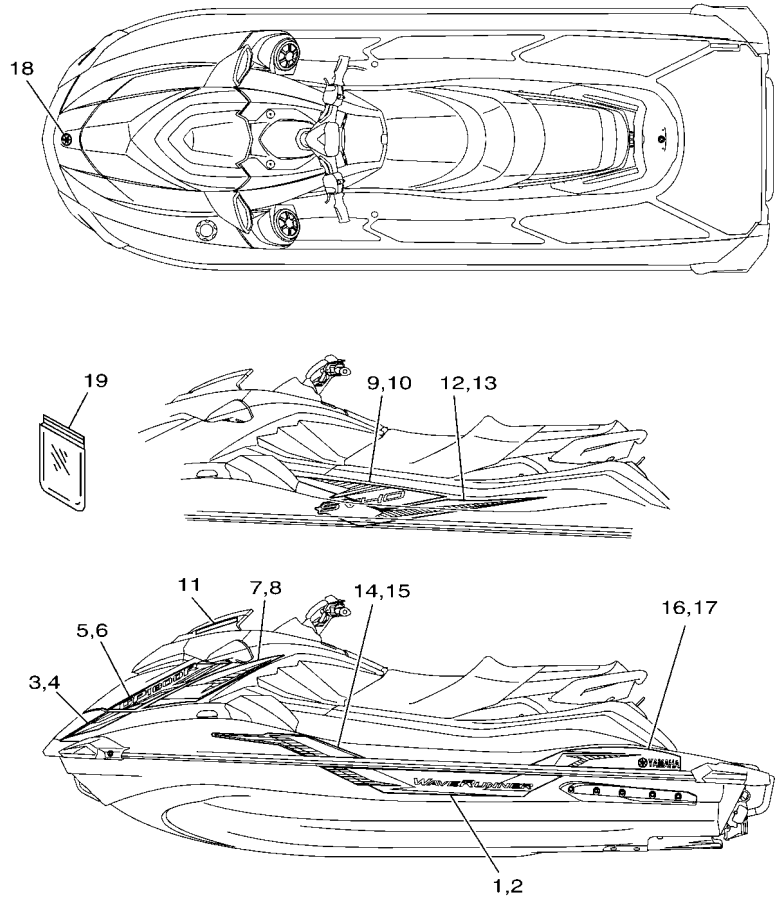


F4P2100-W400

## FIG. 40 GRAPHICS

| REF. NO. | PART NO. | DESCRIPTION | CAN | EUR | | | | REMARKS |
|---|---|---|---|---|---|---|---|---|
| 14 | F4P–U417S–10 | GRAPHIC G (LH) | 1 | 1 | | | | FOR BLACK |
| 15 | F4P–U417T–00 | GRAPHIC H (RH) | 1 | 1 | | | | FOR BLUE |
| | F4P–U417T–10 | GRAPHIC H (RH) | 1 | 1 | | | | FOR BLACK |
| 16 | F4P–U417U–00 | GRAPHIC J (LH) | 1 | 1 | | | | FOR BLUE |
| | F4P–U417U–10 | GRAPHIC J (LH) | 1 | 1 | | | | FOR BLACK |
| 17 | F4P–U417V–00 | GRAPHIC K (RH) | 1 | 1 | | | | FOR BLUE |
| | F4P–U417V–10 | GRAPHIC K (RH) | 1 | 1 | | | | FOR BLACK |
| 18 | F3Y–U411H–02 | EMBLEM, TUNING FORK | 1 | 1 | | | | |
| 19 | F3Y–U5901–00 | BAG, VINYL | 1 | 1 | | | | |

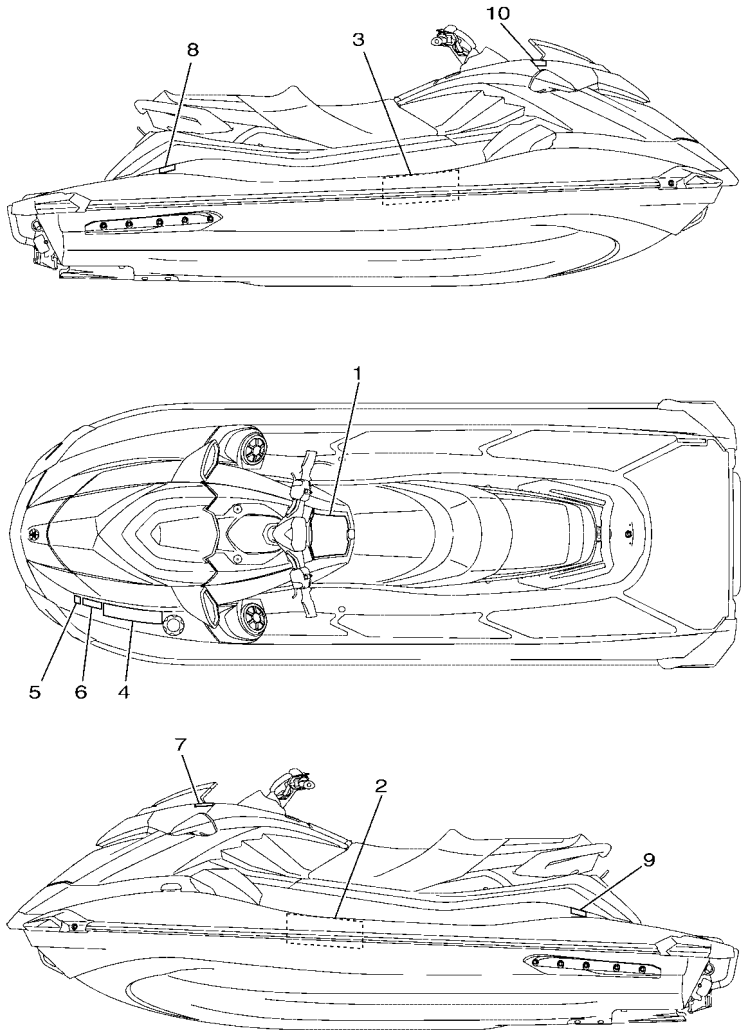


F4P2100-W410

## FIG. 41 IMPORTANT LABELS

| REF. NO. | PART NO. | DESCRIPTION | CAN | EUR | | | | REMARKS |
|---|---|---|---|---|---|---|---|---|
| 1 | F4P–U41B1–00 | LABEL, WARNING UNIFORM 1 | 1 | 1 | | | | |
| 2 | F3V–U41B1–00 | LABEL, WARNING UNIFORM 1 | 1 | 1 | | | | |
| 3 | F3V–U41B1–20 | LABEL, WARNING UNIFORM 1 | 1 | 1 | | | | |
| 4 | F3J–U415B–10 | LABEL, WARNING(FUEL) | 1 | 1 | | | | |
| 5 | B4F–F817K–00 | LABEL, FUEL | | 1 | | | | FOR EUR |
| 6 | F3J–U419B–10 | LABEL 1 | 1 | 1 | | | | |
| 7 | F1B–U41F5–21 | LABEL, FIRE EXTINGUISHER 1 | 1 | 1 | | | | |
| 8 | F3V–U416A–10 | WARNING LABEL ASSY. | 1 | 1 | | | | |
| 9 | F1S–U419E–01 | LABEL 4 | 1 | | | | | FOR CAN |
| 10 | F4G–U413P–10 | LABEL, BUILDERS PLATE | | 1 | | | | FOR EUR |

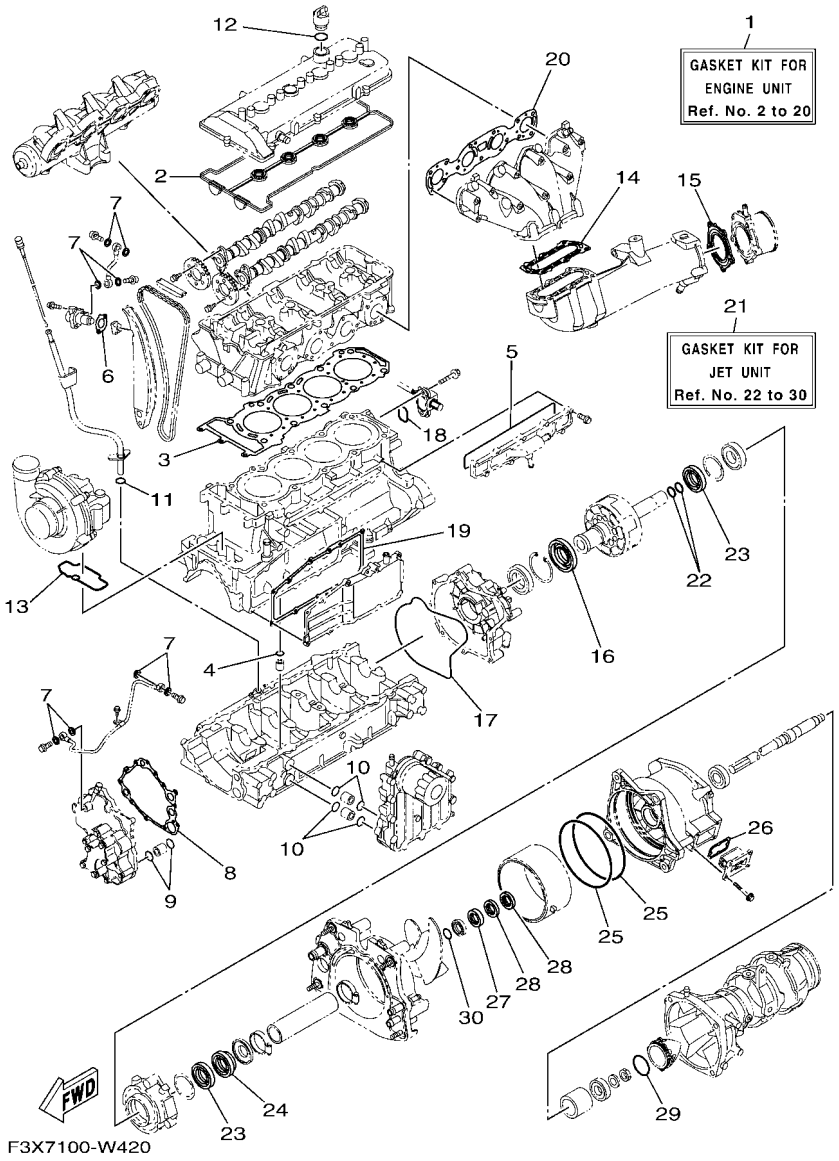


## FIG. 42 REPAIR KIT 1

| REF. NO. | PART NO. | DESCRIPTION | CAN | EUR | | | | REMARKS |
|---|---|---|---|---|---|---|---|---|
| 1 | 6HL–W0001–00 | GASKET KIT FOR ENGINE UNIT | 1 | 1 | | | | |
| 2 | 6BH–11193–00 | .GASKET, HEAD COVER 1 | 1 | 1 | | | | |
| 3 | 6JC–11181–00 | .GASKET, CYLINDER HEAD 1 | 1 | 1 | | | | |
| 4 | 93210–11453 | .O-RING | 1 | 1 | | | | |
| 5 | 6CS–12517–00 | .GASKET, WATER INLET | 1 | 1 | | | | |
| 6 | 6S5–121E2–00 | .GASKET | 1 | 1 | | | | |
| 7 | 90430–10007 | .GASKET | 8 | 8 | | | | |
| 8 | 6S5–13563–00 | .GASKET | 1 | 1 | | | | |
| 9 | 93210–21631 | .O-RING | 2 | 2 | | | | |
| 10 | 93210–18322 | .O-RING | 4 | 4 | | | | |
| 11 | 93210–12016 | .O-RING | 1 | 1 | | | | |
| 12 | 93210–24M79 | .O-RING | 1 | 1 | | | | |
| 13 | 6S5–1416A–00 | .O-RING | 1 | 1 | | | | |
| 14 | 6S5–14739–00 | .GASKET, MUFFLER DAMPER 1 | 1 | 1 | | | | |
| 15 | 6BH–14749–00 | .GASKET, MUFFLER DAMPER 2 | 1 | 1 | | | | |
| 16 | 6S5–81167–10 | .OIL SEAL | 1 | 1 | | | | |
| 17 | 6S5–81168–00 | .O-RING | 1 | 1 | | | | |
| 18 | 93210–32172 | .O-RING | 1 | 1 | | | | |
| 19 | 6BH–13557–00 | .GASKET | 1 | 1 | | | | |
| 20 | 6ET–14613–00 | .GASKET, EXHAUST PIPE | 1 | 1 | | | | |
| 21 | 6GN–W0001–20 | GASKET KIT FOR JET UNIT | 1 | 1 | | | | |
| 22 | 93210–22MF1 | .O-RING | 2 | 2 | | | | |
| 23 | 93102–29008 | .OIL SEAL | 2 | 2 | | | | |
| 24 | 93102–29009 | .OIL SEAL | 1 | 1 | | | | |
| 25 | 93211–70800 | .O-RING | 2 | 2 | | | | |
| 26 | 66V–42414–00 | .O-RING | 1 | 1 | | | | |
| 27 | 93102–31009 | .OIL SEAL | 1 | 1 | | | | |

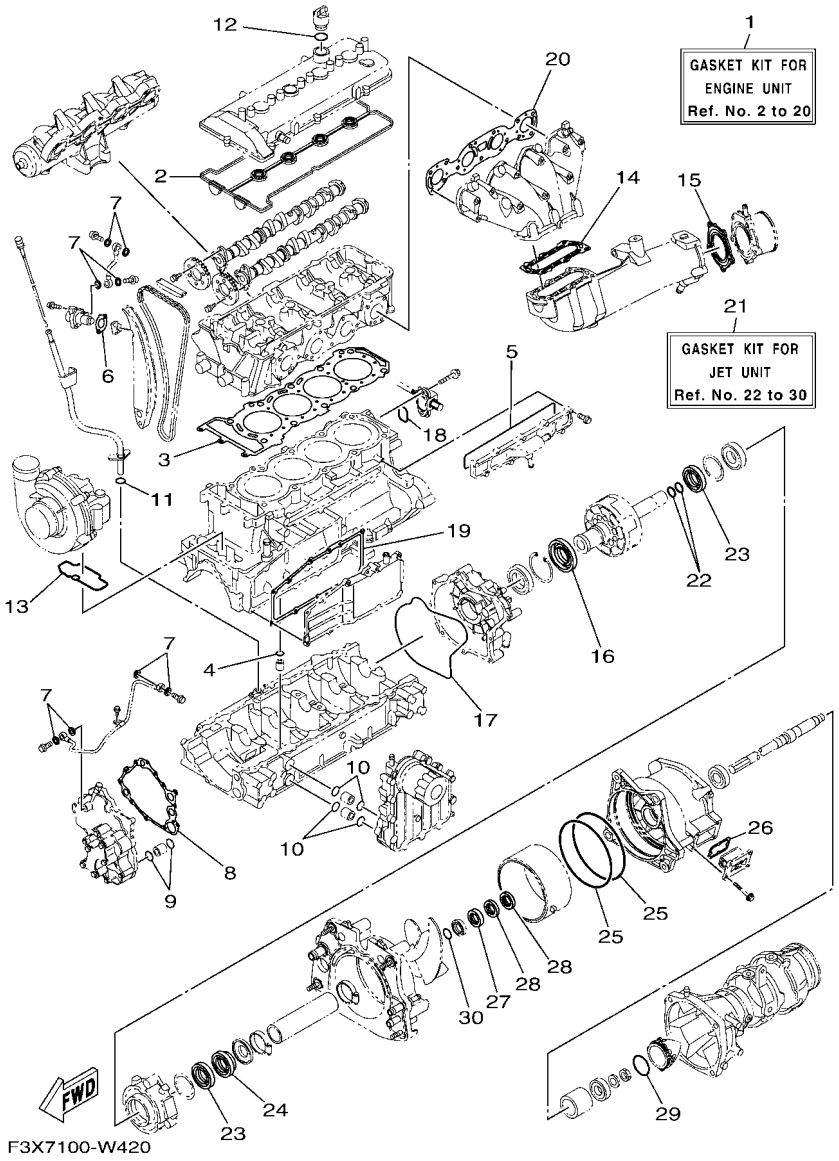


## FIG. 42 REPAIR KIT 1

| REF. NO. | PART NO. | DESCRIPTION | CAN | EUR | | | | REMARKS |
|---|---|---|---|---|---|---|---|---|
| 28 | 93101–31001 | .OIL SEAL | 2 | 2 | | | | |
| 29 | 93210–54010 | .O-RING | 1 | 1 | | | | |
| 30 | 93210–30611 | .O-RING | 1 | 1 | | | | |

| PART NO. | REF. NO. |
|---|---|
| 6S5–11102–12 | 2 – 2 |
| 6BH–1111E–00 | 2 – 11 |
| 6S5–11133–10 | 2 – 3 |
| 6S5–11166–10 | 12 – 1 |
| 6S5–11167–10 | 12 – 4 |
| 6JC–11181–00 | 2 – 10 |
| | 42 – 3 |
| 6S5–11191–20 | 1 – 1 |
| 6BH–11193–00 | 1 – 3 |
| | 42 – 2 |
| 69J–11301–10 | 3 – 9 |
| 6S5–1131M–10–8P | 3 – 16 |
| 68V–11325–02 | 3 – 10 |
| 67F–11328–00 | 3 – 11 |
| 6S5–11377–00 | 3 – 15 |
| 6ET–11411–00 | 4 – 1 |
| 6S5–11416–00 | 4 – 2 |
| 6S5–11416–10 | 4 – 2 |
| 6S5–11416–20 | 4 – 2 |
| 6S5–11416–30 | 4 – 2 |
| 6S5–11416–40 | 4 – 2 |
| 6S5–11459–01 | 4 – 15 |
| 6S5–11603–00 | 4 – 4 |
| 6ET–11631–01–B0 | 4 – 3 |
| 6ET–11633–00 | 4 – 6 |
| 6S5–11650–10 | 4 – 8 |
| 6S5–11654–10 | 4 – 9 |
| 6S5–11656–40 | 4 – 10 |
| 6S5–11656–50 | 4 – 10 |
| 6S5–11656–60 | 4 – 10 |
| 6S5–11656–70 | 4 – 10 |
| 6S5–12111–00 | 5 – 5 |
| 6S5–12113–00 | 5 – 8 |
| 6S5–12116–00 | 5 – 7 |
| 6S5–12117–00 | 5 – 9 |
| 3LD–12118–00 | 5 – 10 |
| 51Y–12119–00 | 5 – 11 |
| 6S5–12121–00 | 5 – 6 |
| 6S5–12153–00 | 5 – 13 |
| 3LD–12168–00 | 5 – 12 |
| 3LD–12168–20 | 5 – 12 |
| 3LD–12168–40 | 5 – 12 |
| 3LD–12168–60 | 5 – 12 |
| 3LD–12168–80 | 5 – 12 |
| 3LD–12168–A0 | 5 – 12 |
| 3LD–12168–F0 | 5 – 12 |
| 3LD–12168–H1 | 5 – 12 |
| 3LD–12168–K1 | 5 – 12 |

| PART NO. | REF. NO. |
|---|---|
| 3LD–12168–M1 | 5 – 12 |
| 3LD–12168–R1 | 5 – 12 |
| 3LD–12168–U1 | 5 – 12 |
| 3LD–12168–W1 | 5 – 12 |
| 3LD–12168–Y1 | 5 – 12 |
| 3LD–12169–11 | 5 – 12 |
| 3LD–12169–31 | 5 – 12 |
| 3LD–12169–50 | 5 – 12 |
| 3LD–12169–70 | 5 – 12 |
| 3LD–12169–90 | 5 – 12 |
| 3LD–12169–E0 | 5 – 12 |
| 3LD–12169–G0 | 5 – 12 |
| 3LD–12169–J0 | 5 – 12 |
| 3LD–12169–L0 | 5 – 12 |
| 6S5–12171–10 | 5 – 1 |
| 6ET–12176–00 | 5 – 3 |
| 6ET–12181–00 | 5 – 2 |
| 6S5–121E2–00 | 5 – 19 |
| | 42 – 6 |
| 6S5–12210–01 | 5 – 18 |
| 6S5–12228–01 | 2 – 7 |
| 6BH–12241–00 | 5 – 25 |
| 6ET–12251–00 | 5 – 24 |
| 6ET–12252–00 | 5 – 15 |
| 6BH–12279–00 | 5 – 16 |
| 6S5–12289–00 | 4 – 12 |
| 6D3–12411–00 | 2 – 13 |
| 6BH–12413–00 | 2 – 14 |
| 6S5–1243E–01 | 14 – 6 |
| 60E–12443–00 | 14 – 40 |
| 6BH–1244H–00 | 14 – 16 |
| 6HL–12456–00 | 2 – 8 |
| 6CS–12469–A0 | 3 – 20 |
| 6CS–12517–00 | 3 – 21 |
| | 42 – 5 |
| 6DH–12552–00 | 14 – 21 |
| 6ET–12576–01 | 14 – 29 |
| 6S5–12576–01 | 14 – 33 |
| 6ET–12577–00 | 14 – 24 |
| 6S5–12578–00 | 2 – 16 |
| 6ET–12579–00 | 14 – 26 |
| 63M–12580–10 | 14 – 38 |
| 6ET–12581–10 | 14 – 37 |
| 6BH–12584–00 | 14 – 9 |
| 6CN–12588–00 | 14 – 18 |
| 6S5–12589–01 | 14 – 14 |
| 6S5–12594–00 | 14 – 32 |
| 6S5–12858–00 | 11 – 2 |

| PART NO. | REF. NO. |
|---|---|
| 6CS–12880–00 | 6 – 4 |
| 6S5–1310A–25 | 10 – 1 |
| 6BH–1319K–00 | 3 – 29 |
| 6S5–13300–22 | 9 – 1 |
| 6S5–13317–10 | 10 – 4 |
| 6S5–13337–10 | 3 – 23 |
| 6S5–13405–11 | 10 – 2 |
| 6HL–13416–00 | 9 – 7 |
| 6S5–13418–00 | 5 – 21 |
| 69J–13440–04 | 11 – 1 |
| 60E–13446–00 | 11 – 12 |
| 6S5–13446–10 | 9 – 5 |
| 6BH–13470–30 | 11 – 3 |
| 6S5–13477–00 | 10 – 3 |
| 6S5–13532–00 | 6 – 14 |
| 6BH–13556–00 | 11 – 4 |
| 8FP–13556–10 | 6 – 10 |
| 6BH–13557–00 | 3 – 17 |
| | 42 – 19 |
| 6S5–13563–00 | 9 – 2 |
| | 42 – 8 |
| 6ET–13641–10 | 6 – 3 |
| 6HL–13651–00 | 7 – 24 |
| 6HL–13670–00 | 7 – 11 |
| 6S5–13691–12 | 7 – 12 |
| 6ET–13750–00 | 6 – 1 |
| 6ET–13761–00 | 6 – 8 |
| 6S5–13907–04 | 23 – 38 |
| 6ET–14156–00 | 6 – 16 |
| 6EY–14156–00 | 6 – 17 |
| 6S5–14159–00 | 6 – 15 |
| 68V–1416A–00 | 6 – 9 |
| 6S5–1416A–00 | 7 – 4 |
| | 42 – 13 |
| 6S5–14199–00 | 7 – 3 |
| 6HL–141A0–00 | 7 – 1 |
| 6S5–14243–01 | 7 – 18 |
| 6S5–14285–00 | 6 – 12 |
| F4P–14305–01 | 37 – 15 |
| 6HL–14349–00 | 7 – 9 |
| 6S5–14435–00 | 7 – 17 |
| 6BH–14445–00 | 6 – 13 |
| 6CS–14445–00 | 6 – 26 |
| 6ET–14445–00 | 6 – 23 |
| 6CS–14446–00 | 6 – 5 |
| 6CS–14572–00 | 6 – 25 |
| 6ET–14572–00 | 6 – 22 |
| 6ET–14613–00 | 13 – 1 |

| PART NO. | REF. NO. |
|---|---|
| 6ET–14613–00 | 42 – 20 |
| 6BH–14711–11 | 13 – 2 |
| 6BH–14721–11 | 13 – 6 |
| 6S5–14739–00 | 13 – 7 |
| | 42 – 14 |
| 6BH–14749–00 | 13 – 14 |
| | 42 – 15 |
| 6CS–1475A–00 | 13 – 20 |
| 6S5–14771–00 | 13 – 11 |
| 6BH–14784–01 | 13 – 15 |
| 6CS–15100–20 | 3 – 1 |
| 6ET–15362–00 | 3 – 26 |
| 6S5–15363–00 | 1 – 7 |
| 6S5–15486–10 | 10 – 5 |
| 5EL–15511–00 | 20 – 6 |
| 6S5–15515–01 | 19 – 3 |
| 6S5–15517–00 | 19 – 5 |
| 6S5–15521–00 | 19 – 4 |
| 6S5–15590–00 | 19 – 1 |
| 6S5–17031–00 | 4 – 17 |
| 6S5–17525–01 | 4 – 14 |
| 6S5–17529–00 | 4 – 19 |
| 6S5–17553–00 | 4 – 23 |
| 6S5–17572–01 | 4 – 11 |
| 6S5–17585–10 | 4 – 22 |
| 6ET–17800–00 | 4 – 16 |
| 6ET–17800–10 | 4 – 16 |
| EU0–23814–31 | 38 – 30 |
| 70R–24489–00 | 33 – 4 |
| 6AN–2450B–10 | 6 – 18 |
| 70R–24543–00 | 33 – 3 |
| F4P–26411–01 | 37 – 10 |
| 6EX–2812A–00 | 21 – 17 |
| 6BH–41661–00–94 | 25 – 4 |
| 6BH–41662–00–94 | 25 – 5 |
| 66V–42414–00 | 15 – 9 |
| | 42 – 26 |
| 67X–44517–10 | 25 – 1 |
| 663–45119–00 | 16 – 10 |
| 6ET–45613–00 | 16 – 8 |
| 6S5–45813–01–94 | 4 – 13 |
| 6BH–4581J–01 | 16 – 16 |
| 68N–5112T–00 | 29 – 57 |
| F4P–60211–00 | 36 – 34 |
| F3Y–60221–10 | 36 – 37 |
| F4P–60222–00 | 36 – 48 |
| F3J–60428–00 | 36 – 23 |
| | 36 – 24 |

| PART NO. | REF. NO. |
|---|---|
| F4P–61256–00 | 36 – 19 |
| F3Y–61344–00 | 36 – 38 |
| | 36 – 49 |
| F4P–61344–00 | 36 – 40 |
| | 36 – 51 |
| F3Y–61348–00 | 36 – 30 |
| F4P–61348–00 | 36 – 43 |
| F1S–6134M–00 | 38 – 5 |
| F2C–6134M–00 | 38 – 6 |
| F1S–6134M–10 | 38 – 7 |
| F1W–61355–00 | 38 – 17 |
| F4P–61368–00 | 37 – 12 |
| | 37 – 17 |
| F4P–613A5–00 | 36 – 39 |
| | 36 – 50 |
| F4P–613A5–10 | 36 – 36 |
| | 36 – 47 |
| F3J–613B3–00 | 36 – 20 |
| F3J–613B4–00 | 36 – 29 |
| | 36 – 42 |
| F3J–613B4–10 | 36 – 32 |
| | 36 – 45 |
| F3J–613B4–20 | 36 – 18 |
| F4P–613C1–00 | 38 – 13 |
| F3J–613C3–10 | 36 – 22 |
| F3J–613D0–00 | 36 – 11 |
| F4P–61400–01 | 38 – 1 |
| F4P–6140B–02 | 36 – 8 |
| F1W–6142B–00 | 38 – 18 |
| F4P–61435–00 | 38 – 3 |
| F1B–61438–00 | 36 – 2 |
| F1S–6143C–00 | 38 – 10 |
| F3Y–6143J–00 | 36 – 13 |
| F2N–61460–00 | 36 – 5 |
| EU0–61461–02 | 38 – 15 |
| F1B–61461–02 | 36 – 4 |
| F1S–6146A–00 | 38 – 9 |
| F1S–61481–11 | 36 – 1 |
| F3J–61492–00 | 36 – 33 |
| | 36 – 46 |
| F3J–6150A–00 | 36 – 58 |
| F3J–6150D–00 | 36 – 59 |
| F4P–6150E–00 | 36 – 56 |
| F3Y–6150F–00 | 36 – 57 |
| F1W–61516–00 | 38 – 23 |
| F4P–6151M–00 | 38 – 19 |
| F1B–6151S–00 | 36 – 3 |
| F4P–6152K–00 | 36 – 9 |

| PART NO. | REF. NO. |
|---|---|
| F1S–6153R–01 | 38 – 14 |
| F1K–61624–00 | 29 – 18 |
| F0X–61637–00 | 29 – 21 |
| EU0–61652–00 | 14 – 42 |
| | 29 – 2 |
| F0X–61652–01 | 29 – 22 |
| F1S–61782–00 | 38 – 8 |
| EW2–62142–00 | 33 – 2 |
| F1G–62149–00 | 33 – 8 |
| F2F–6214A–00 | 33 – 1 |
| GP7–62159–02 | 33 – 6 |
| F3J–63262–00 | 36 – 10 |
| F1W–6358B–00 | 38 – 20 |
| GA7–65772–00 | 35 – 4 |
| F4P–65938–00 | 38 – 11 |
| F4P–65939–00 | 38 – 12 |
| 6CS–6725F–00 | 37 – 9 |
| | 37 – 19 |
| F4P–6725F–00 | 37 – 11 |
| | 37 – 16 |
| F3J–67369–00 | 36 – 12 |
| F4P–67410–00 | 38 – 2 |
| F4P–6773D–00 | 38 – 4 |
| F2S–67743–01 | 33 – 45 |
| F1B–67747–00 | 33 – 22 |
| EW2–67821–00 | 35 – 3 |
| F4P–68197–00 | 36 – 15 |
| F3J–68198–00 | 36 – 26 |
| F3Y–68198–00 | 36 – 14 |
| F3J–68198–20 | 36 – 21 |
| | 36 – 31 |
| | 36 – 44 |
| F4P–68270–00 | 36 – 25 |
| F3J–68273–00 | 36 – 27 |
| F4P–68273–00 | 36 – 35 |
| 6S5–682E0–00 | 23 – 39 |
| F4P–68310–01 | 37 – 8 |
| F1S–68341–00 | 38 – 24 |
| EW2–68348–00 | 37 – 14 |
| F4P–68352–00 | 36 – 28 |
| F2X–6838B–02 | 38 – 22 |
| F2X–6838C–01 | 38 – 21 |
| 6S5–81167–10 | 19 – 13 |
| | 42 – 16 |
| 6S5–81168–00 | 19 – 17 |
| | 42 – 17 |
| 6S5–81315–00 | 22 – 19 |
| 6S5–81328–00 | 19 – 18 |

| PART NO. | REF. NO. |
|---|---|
| 6S5–81337–31 | 19 – 11 |
| 6S5–81364–10 | 19 – 24 |
| 6ET–81410–00 | 19 – 7 |
| 6S5–81450–01 | 19 – 6 |
| 6S5–81800–00 | 20 – 1 |
| 6S5–81810–00 | 20 – 13 |
| 6S5–81820–00 | 20 – 12 |
| 6S5–81826–00 | 20 – 10 |
| 6S5–81830–00 | 20 – 3 |
| 6S5–81840–00 | 20 – 8 |
| 11H–81844–00 | 20 – 2 |
| 4G0–81844–00 | 20 – 4 |
| 5EL–81845–00 | 20 – 11 |
| 6CS–81845–10 | 21 – 3 |
| 3TB–81847–00 | 20 – 9 |
| 1J7–81847–60 | 20 – 5 |
| 5A8–81850–10 | 20 – 14 |
| F4P–81860–00 | 37 – 18 |
| 1B7–81940–00 | 21 – 26 |
| 6S5–81942–20 | 21 – 4 |
| 6ET–81948–00 | 21 – 9 |
| 6CS–81953–00 | 21 – 28 |
| 6EX–8195A–00 | 21 – 16 |
| 6EK–81960–10 | 22 – 1 |
| 6ET–81972–00 | 22 – 3 |
| 6ET–81975–01 | 22 – 2 |
| 6CS–82115–00 | 21 – 24 |
| 6S5–82116–00 | 23 – 41 |
| 6CS–82117–00 | 21 – 25 |
| 67F–82151–00 | 21 – 13 |
| 6EX–82151–00 | 21 – 15 |
| 67F–82151–10 | 21 – 14 |
| 67F–82151–30 | 21 – 11 |
| 67F–82151–40 | 21 – 12 |
| 6EX–82170–02 | 21 – 10 |
| 6S5–82310–00 | 22 – 8 |
| 6A0–82317–00 | 21 – 19 |
| 61N–82317–01 | 1 – 4 |
| 6A0–82317–01 | 36 – 17 |
| 6BH–82380–00 | 6 – 6 |
| 68V–82504–00 | 22 – 18 |
| 6S5–82509–00 | 6 – 2 |
| 60E–82556–00 | 23 – 40 |
| 6CR–82560–00 | 22 – 14 |
| 6ET–82576–00 | 21 – 21 |
| 6EM–82599–00 | 21 – 31 |
| F4P–8259E–00 | 37 – 13 |
| 6JN–8259L–00 | 21 – 30 |

| PART NO. | REF. NO. |
|---|---|
| 6CS–8273J–10 | 22 – 22 |
| 60E–83627–00 | 21 – 5 |
| 6EY–84385–00 | 14 – 41 |
| 6CS–85516–00 | 3 – 30 |
| 6JC–8572F–00 | 3 – 28 |
| 6AN–85780–00 | 22 – 20 |
| 61A–85790–00 | 22 – 12 |
| 6AA–85790–00 | 22 – 26 |
| 6S5–85886–00 | 6 – 11 |
| F4P–85887–00 | 36 – 41 |
| 60E–85896–02 | 22 – 16 |
| 6JN–8591A–00 | 21 – 6 |
| 6JN–8591A–10 | 21 – 6 |
| 6EY–8591S–00 | 21 – 8 |
| 6JN–E110M–00 | 1 – 9 |
| 6S5–E118E–01 | 1 – 11 |
| 6S5–E1328–00 | 1 – 10 |
| 6ET–E2289–00 | 16 – 12 |
| 67X–E2590–00 | 14 – 34 |
| 67X–E2590–10 | 14 – 34 |
| 6S5–E4410–02 | 8 – 1 |
| 6S5–E4419–00 | 8 – 7 |
| 6S5–E4436–00 | 8 – 3 |
| 6S5–E4451–01 | 8 – 2 |
| 6S5–E4752–00 | 13 – 17 |
| B4F–F817K–00 | 41 – 5 |
| 6S5–G2717–00 | 8 – 4 |
| 6CN–G4532–00 | 25 – 2 |
| 6CN–G4574–00 | 25 – 3 |
| 6S5–G5332–00 | 16 – 3 |
| 6ET–G5511–00 | 15 – 16 |
| 6CS–G5538–00 | 15 – 12 |
| 6S5–G5593–00 | 16 – 11 |
| 6JN–G5831–00 | 15 – 1 |
| 6GN–G6882–00 | 15 – 8 |
| 5FU–H2100–20 | 23 – 1 |
| 6S5–R1142–10 | 8 – 8 |
| 6AN–R1190–00 | 15 – 37 |
| 6HL–R1312–00 | 15 – 4 |
| 6S5–R1313–01 | 15 – 34 |
| 6ET–R1314–10 | 17 – 4 |
| 6ET–R1318–00 | 15 – 25 |
| 6EV–R1321–00 | 15 – 22 |
| 6S5–R1323–00 | 16 – 1 |
| 6ET–R1326–00 | 15 – 19 |
| 6GN–R1337–00 | 15 – 6 |
| 6ET–R1341–10 | 17 – 1 |
| 6ET–R1342–10 | 17 – 2 |

| PART NO. | REF. NO. |
|---|---|
| 6BH–R1348–00 | 15 – 23 |
| 6S5–R1381–01 | 16 – 15 |
| 6EY–R1959–00 | 18 – 1 |
| 6S5–R2358–00 | 17 – 11 |
| F4P–U0228–00 | 24 – 11 |
| F4P–U0362–00 | 24 – 12 |
| F4N–U0392–00 | 24 – 21 |
| F4N–U0392–10 | 24 – 25 |
| F4N–U0840–03 | 24 – 1 |
| F2C–U1314–00 | 29 – 52 |
| F4P–U1355–00 | 27 – 35 |
| F2S–U13C1–00 | 26 – 2 |
| | 26 – 4 |
| | 26 – 12 |
| | 27 – 25 |
| | 39 – 6 |
| | 39 – 12 |
| F4P–U1421–00 | 39 – 14 |
| F4P–U142A–00 | 39 – 1 |
| F4P–U142D–00 | 39 – 4 |
| F2N–U142L–00 | 23 – 7 |
| | 24 – 18 |
| | 27 – 18 |
| | 27 – 43 |
| | 27 – 46 |
| | 28 – 7 |
| | 28 – 14 |
| | 28 – 25 |
| | 28 – 32 |
| | 30 – 3 |
| | 30 – 6 |
| | 30 – 9 |
| | 30 – 19 |
| | 30 – 23 |
| | 30 – 27 |
| | 35 – 15 |
| F3Y–U142L–00 | 26 – 32 |
| | 29 – 41 |
| | 32 – 27 |
| | 36 – 55 |
| | 38 – 28 |
| F4P–U142M–00 | 39 – 5 |
| F4P–U143D–00 | 39 – 2 |
| F4P–U143E–00 | 39 – 3 |
| F4P–U143L–00 | 39 – 13 |
| F4P–U1454–00 | 26 – 36 |
| 6ET–U1461–10 | 15 – 38 |
| 6GA–U1461–10 | 17 – 14 |

| PART NO. | REF. NO. |
|---|---|
| F2S–U1516–00 | 37 – 6 |
| F3Y–U153K–00 | 26 – 8 |
| | 27 – 8 |
| | 27 – 10 |
| F4P–U153K–00 | 39 – 10 |
| F4P–U153K–10 | 39 – 11 |
| F4P–U1552–10 | 37 – 1 |
| F1X–U1554–00 | 38 – 25 |
| F4P–U155C–00 | 37 – 2 |
| F4P–U155C–10 | 37 – 2 |
| F4P–U155D–00 | 37 – 3 |
| F4P–U155D–10 | 37 – 3 |
| F2N–U1628–02 | 29 – 11 |
| | 32 – 33 |
| F1B–U1653–02 | 29 – 17 |
| F4P–U1708–00 | 27 – 28 |
| F2C–U1743–00 | 23 – 11 |
| | 26 – 14 |
| F4P–U1743–00 | 27 – 4 |
| F2X–U2127–00 | 31 – 1 |
| F2N–U213G–02 | 31 – 5 |
| F2X–U2157–00 | 31 – 2 |
| 6ET–U215E–00 | 15 – 29 |
| F4N–U2177–00 | 24 – 13 |
| F4P–U2249–01 | 34 – 13 |
| F3X–U224B–00 | 34 – 1 |
| F3X–U224C–00 | 34 – 2 |
| F4P–U2255–00 | 34 – 19 |
| F1S–U2280–02 | 29 – 31 |
| F1S–U2285–00 | 29 – 32 |
| F4P–U2511–00 | 30 – 1 |
| F4P–U2512–00 | 30 – 11 |
| F4P–U2519–00 | 30 – 12 |
| F4P–U2519–10 | 30 – 12 |
| F4P–U251D–00 | 30 – 20 |
| F4P–U251E–00 | 30 – 24 |
| F4P–U252C–00 | 30 – 17 |
| F4P–U252E–00 | 30 – 4 |
| F4P–U252F–00 | 30 – 7 |
| F3Y–U2624–00 | 39 – 9 |
| F4P–U2663–00 | 26 – 9 |
| F4P–U2664–00 | 32 – 3 |
| F4P–U266B–00 | 32 – 12 |
| F4P–U266D–00 | 32 – 8 |
| F4P–U266E–00 | 32 – 31 |
| F1W–U269B–00 | 29 – 1 |
| F4P–U271B–00 | 32 – 21 |
| F3X–U2723–00 | 27 – 29 |

| PART NO. | REF. NO. |
|---|---|
| F2C–U2733–00 | 35 – 18 |
| F4P–U273B–00 | 18 – 6 |
| F2X–U278A–00 | 29 – 49 |
| F2S–U278F–00 | 29 – 53 |
| F2S–U278H–00 | 29 – 54 |
| F4L–U3222–00 | 18 – 7 |
| F4M–U351H–00 | 30 – 29 |
| F4M–U351H–10 | 30 – 29 |
| F4M–U351J–00 | 30 – 30 |
| F4M–U351J–10 | 30 – 30 |
| F4P–U351K–01 | 30 – 31 |
| F4P–U351K–10 | 30 – 31 |
| F4P–U351M–01 | 30 – 32 |
| F4P–U351M–10 | 30 – 32 |
| F4P–U351N–01 | 30 – 33 |
| F4P–U351N–10 | 30 – 33 |
| F4P–U351P–01 | 30 – 34 |
| F4P–U351P–10 | 30 – 34 |
| F4P–U3581–02 | 30 – 28 |
| F4P–U3581–11 | 30 – 28 |
| F4P–U371A–00 | 32 – 1 |
| F4P–U371A–10 | 32 – 1 |
| F4P–U371B–00 | 32 – 2 |
| F4P–U371B–10 | 32 – 2 |
| F4P–U372A–00 | 32 – 6 |
| F4P–U372A–10 | 32 – 6 |
| F4P–U372B–00 | 32 – 7 |
| F4P–U372B–10 | 32 – 7 |
| F4G–U372G–00 | 32 – 32 |
| F4P–U3743–00 | 32 – 11 |
| F1W–U3768–01 | 26 – 10 |
| | 27 – 21 |
| GH1–U3774–00 | 32 – 13 |
| | 32 – 22 |
| F4P–U377B–00–P0 | 28 – 2 |
| F4P–U377B–00–P1 | 28 – 2 |
| F4P–U377C–00–P0 | 28 – 20 |
| F4P–U377C–00–P1 | 28 – 20 |
| F4P–U377F–10 | 28 – 15 |
| F4P–U377F–20 | 28 – 15 |
| F4P–U377G–10 | 28 – 33 |
| F4P–U377G–20 | 28 – 33 |
| F2C–U377H–00 | 29 – 51 |
| F4P–U377H–00 | 28 – 18 |
| F4P–U377J–00 | 28 – 36 |
| F4P–U377M–00 | 28 – 3 |
| F4P–U377N–00 | 28 – 21 |
| F2C–U3850–00 | 32 – 4 |

| PART NO. | REF. NO. |
|---|---|
| F1B–U3850–02 | 32 – 9 |
| F3Y–U411H–02 | 40 – 18 |
| F4G–U413P–10 | 41 – 10 |
| F3J–U415B–10 | 41 – 4 |
| F3V–U416A–10 | 41 – 8 |
| F4P–U417B–00 | 40 – 1 |
| F4P–U417B–10 | 40 – 1 |
| F4P–U417C–00 | 40 – 2 |
| F4P–U417C–10 | 40 – 2 |
| F4P–U417D–00 | 40 – 3 |
| F4P–U417D–10 | 40 – 3 |
| F4P–U417E–00 | 40 – 4 |
| F4P–U417E–10 | 40 – 4 |
| F4P–U417F–00 | 40 – 5 |
| F4P–U417F–10 | 40 – 5 |
| F4P–U417G–00 | 40 – 6 |
| F4P–U417G–10 | 40 – 6 |
| F4P–U417H–00 | 40 – 7 |
| F4P–U417H–10 | 40 – 7 |
| F4P–U417J–00 | 40 – 8 |
| F4P–U417J–10 | 40 – 8 |
| F4P–U417K–00 | 40 – 9 |
| F4P–U417K–10 | 40 – 9 |
| F4P–U417L–00 | 40 – 10 |
| F4P–U417L–10 | 40 – 10 |
| F4P–U417M–00 | 40 – 11 |
| F4P–U417M–10 | 40 – 11 |
| F4P–U417P–00 | 40 – 12 |
| F4P–U417P–10 | 40 – 12 |
| F4P–U417R–00 | 40 – 13 |
| F4P–U417R–10 | 40 – 13 |
| F4P–U417S–00 | 40 – 14 |
| F4P–U417S–10 | 40 – 14 |
| F4P–U417T–00 | 40 – 15 |
| F4P–U417T–10 | 40 – 15 |
| F4P–U417U–00 | 40 – 16 |
| F4P–U417U–10 | 40 – 16 |
| F4P–U417V–00 | 40 – 17 |
| F4P–U417V–10 | 40 – 17 |
| F3J–U419B–10 | 41 – 6 |
| F1S–U419E–01 | 41 – 9 |
| F3V–U41B1–00 | 41 – 2 |
| F4P–U41B1–00 | 41 – 1 |
| F3V–U41B1–20 | 41 – 3 |
| F1B–U41F5–21 | 41 – 7 |
| F3X–U4261–00 | 35 – 9 |
| F4P–U4445–00 | 26 – 31 |
| F4P–U4705–00 | 27 – 36 |

| PART NO. | REF. NO. |
|---|---|
| F4P–U475B–00 | 26 – 34 |
| F4P–U475F–00 | 26 – 35 |
| F1W–U491K–00 | 30 – 2 |
| | 30 – 18 |
| | 30 – 21 |
| | 30 – 25 |
| F3Y–U491K–02 | 32 – 17 |
| GP7–U4953–10 | 29 – 14 |
| | 29 – 15 |
| | 29 – 16 |
| | 32 – 34 |
| F4P–U513M–00–98 | 26 – 15 |
| F4P–U513M–00–P1 | 26 – 15 |
| F4P–U515A–00 | 26 – 27 |
| F4P–U515C–00 | 26 – 24 |
| | 26 – 26 |
| | 26 – 30 |
| F4P–U515D–00 | 26 – 21 |
| F0X–U515E–01 | 27 – 23 |
| F4P–U515N–00–98 | 26 – 5 |
| F4P–U515N–00–P1 | 26 – 5 |
| F4P–U515P–00–P0 | 26 – 11 |
| F4P–U515P–00–P1 | 26 – 11 |
| F4P–U516R–00 | 27 – 33 |
| | 32 – 19 |
| F2X–U5175–00 | 27 – 11 |
| | 28 – 9 |
| | 28 – 27 |
| F4P–U517B–00–98 | 26 – 1 |
| F4P–U517B–00–P1 | 26 – 1 |
| F4P–U517C–00 | 26 – 13 |
| F3X–U517E–00 | 27 – 3 |
| | 27 – 5 |
| | 27 – 30 |
| | 28 – 1 |
| | 28 – 4 |
| | 28 – 16 |
| | 28 – 19 |
| | 28 – 22 |
| | 28 – 34 |
| | 39 – 7 |
| F4P–U517F–00 | 27 – 2 |
| F4P–U517V–00 | 26 – 3 |
| F4P–U517W–00–98 | 27 – 7 |
| F4P–U517W–00–P1 | 27 – 7 |
| F4P–U517X–00–98 | 27 – 9 |
| F4P–U517X–00–P1 | 27 – 9 |
| F4P–U518E–00 | 26 – 28 |

| PART NO. | REF. NO. |
|---|---|
| F4P–U519D–00 | 27 – 37 |
| F4P–U519G–00 | 26 – 7 |
| F4P–U5239–00 | 27 – 13 |
| F4P–U5554–00 | 27 – 6 |
| F1K–U5772–04 | 29 – 43 |
| | 33 – 43 |
| F3Y–U5901–00 | 40 – 19 |
| F4P–U590D–01 | 27 – 38 |
| F4P–U590E–01 | 27 – 40 |
| F4P–U591A–00 | 32 – 28 |
| F4P–U591C–00 | 32 – 29 |
| F4P–U591D–00 | 32 – 30 |
| F4P–U591L–00 | 27 – 31 |
| F2X–U5983–00 | 29 – 46 |
| F4P–U7243–00 | 26 – 23 |
| F4P–U7256–00 | 26 – 29 |
| F1W–U725E–00 | 38 – 29 |
| F1S–U725E–01 | 18 – 3 |
| F4P–U72B7–00 | 18 – 11 |
| F2X–U72C0–00 | 18 – 2 |
| 6CN–U72M2–00 | 15 – 26 |
| F2M–U732B–00 | 25 – 14 |
| | 25 – 15 |
| F2S–U732B–00 | 25 – 12 |
| EU0–U7354–00–01 | 25 – 11 |
| EU0–U7354–00–03 | 25 – 11 |
| EU0–U7354–00–05 | 25 – 11 |
| EU0–U7354–00–10 | 25 – 11 |
| EU0–U7354–00–20 | 25 – 11 |
| F4P–U7462–00 | 26 – 6 |
| F1B–U751G–10 | 35 – 13 |
| F2C–U753B–01 | 35 – 16 |
| F4P–U7550–00 | 35 – 1 |
| F4P–U7555–00 | 35 – 6 |
| F2C–U7557–01 | 18 – 16 |
| F2C–U7564–00 | 35 – 17 |
| F3X–U7564–00 | 34 – 3 |
| F4P–U756B–01 | 28 – 12 |
| F4P–U756C–01 | 28 – 30 |
| GJ1–U7578–11 | 23 – 20 |
| | 23 – 21 |
| | 24 – 3 |
| | 24 – 6 |
| GJ1–U7578–21 | 23 – 19 |
| F1S–U757B–01 | 35 – 14 |
| F3X–U758D–00 | 35 – 11 |
| F2S–U759B–00 | 33 – 46 |
| | 33 – 47 |

| PART NO. | REF. NO. |
|---|---|
| F1K–U759C–00 | 29 – 45 |
| | 33 – 50 |
| | 33 – 51 |
| F1W–U759C–01 | 23 – 9 |
| | 33 – 48 |
| | 33 – 49 |
| F3X–U7617–00 | 34 – 15 |
| F1B–U761D–02 | 29 – 4 |
| F4P–U7626–00 | 34 – 7 |
| | 34 – 22 |
| F4P–U7628–00 | 34 – 4 |
| F4P–U7629–01 | 34 – 10 |
| F4P–U7711–00 | 33 – 15 |
| F1W–U771H–00 | 29 – 50 |
| 6EX–U773D–00 | 29 – 10 |
| | 34 – 11 |
| F2T–U773D–00 | 14 – 7 |
| F3P–U773D–00 | 14 – 22 |
| F4L–U773D–00 | 33 – 53 |
| 6EX–U773E–00 | 29 – 8 |
| F3X–U7767–00 | 34 – 6 |
| F3Y–U7767–00 | 33 – 36 |
| F1B–U7773–00 | 33 – 21 |
| F4P–U7823–00 | 30 – 5 |
| | 30 – 8 |
| | 30 – 22 |
| | 30 – 26 |
| F3X–U7823–02 | 28 – 10 |
| | 28 – 28 |
| F2S–U7823–10 | 28 – 13 |
| | 28 – 31 |
| F3X–U7823–12 | 27 – 26 |
| | 27 – 27 |
| | 27 – 44 |
| | 27 – 47 |
| | 30 – 10 |
| | 39 – 8 |
| F2N–U7831–10 | 33 – 24 |
| GP7–U7832–01 | 33 – 26 |
| F4P–U7833–00 | 33 – 25 |
| GP7–U7834–10 | 33 – 30 |
| F4P–U7835–00 | 33 – 27 |
| F4P–U7835–10 | 33 – 31 |
| F4P–U783F–00 | 33 – 32 |
| F4P–U7844–01 | 33 – 33 |
| F0D–U7856–10 | 33 – 42 |
| F3X–U7857–00 | 34 – 9 |
| F1K–U785G–00 | 33 – 40 |

| PART NO. | REF. NO. |
|---|---|
| F4P–U785G–00 | 33 – 16 |
| GP7–U785H–00 | 33 – 37 |
| F4P–U785H–01 | 33 – 18 |
| F4P–U8090–01 | 23 – 37 |
| F4N–U8102–01 | 24 – 2 |
| F4N–U8102–11 | 24 – 2 |
| F4N–U8103–01 | 24 – 5 |
| F4N–U8103–11 | 24 – 5 |
| F4N–U8104–00 | 24 – 10 |
| F4P–U8167–00 | 33 – 17 |
| F2N–U8169–10 | 29 – 29 |
| | 29 – 30 |
| F4N–U81AJ–00 | 24 – 8 |
| F4P–U820A–01 | 23 – 13 |
| F2S–U8211–00 | 23 – 5 |
| F4P–U821D–00 | 23 – 12 |
| F1S–U8221–00 | 23 – 8 |
| | 33 – 52 |
| | 35 – 2 |
| | 35 – 10 |
| EU0–U8221–30 | 23 – 10 |
| F3J–U822E–00 | 23 – 14 |
| | 23 – 15 |
| F4P–U8262–00 | 27 – 24 |
| F2C–U826C–00 | 27 – 32 |
| | 32 – 18 |
| F1K–U826C–03 | 29 – 38 |
| F4P–U826F–00 | 27 – 22 |
| F4N–U827D–01 | 24 – 9 |
| F4P–U8285–00 | 36 – 52 |
| F1S–U828H–01 | 21 – 33 |
| F2P–U828K–00 | 29 – 48 |
| F1W–U828M–00 | 21 – 34 |
| | 23 – 23 |
| | 23 – 26 |
| | 23 – 29 |
| | 23 – 33 |
| | 31 – 6 |
| | 33 – 9 |
| | 33 – 12 |
| | 34 – 17 |
| | 35 – 19 |
| F3X–U8377–00 | 34 – 21 |
| F3P–U8571–00 | 18 – 14 |
| | 18 – 15 |
| F2X–U8572–00 | 18 – 8 |
| | 18 – 9 |
| F4P–U8572–00 | 29 – 40 |

| PART NO. | REF. NO. |
|---|---|
| F2S–U8577–00 | 18 – 10 |
| F2S–U8592–00 | 23 – 2 |
| | 26 – 18 |
| F2S–U8593–00 | 23 – 3 |
| F2M–U883B–00 | 16 – 22 |
| F2N–U883E–00 | 16 – 19 |
| F1S–U883N–01 | 29 – 24 |
| F1S–U883P–01 | 29 – 25 |
| F1X–U883T–01 | 29 – 26 |
| F1K–U892D–00 | 16 – 23 |
| F4P–U974A–00 | 27 – 42 |
| F4P–U974B–00 | 27 – 45 |
| F4N–UE6GA–01 | 24 – 19 |
| F4N–UE6GA–11 | 24 – 23 |
| F4P–UF88B–00 | 27 – 15 |
| F4P–UF88C–00 | 27 – 16 |
| F4P–UF8DM–00 | 26 – 25 |
| F4N–UFG21–01 | 24 – 14 |
| F4N–UFG22–01 | 24 – 15 |
| F4P–UFRV1–00 | 26 – 22 |
| 6HL–W0001–00 | 42 – 1 |
| 6GN–W0001–20 | 42 – 21 |
| 6ET–W009A–02–94 | 2 – 1 |
| 6CS–W009B–20–94 | 3 – 4 |
| 6S5–W1783–20 | 4 – 18 |
| 90105–05020 | 7 – 2 |
| 90105–06028 | 1 – 2 |
| 90105–06035 | 2 – 15 |
| 90105–06184 | 11 – 6 |
| 90105–06185 | 11 – 7 |
| 90105–06903 | 22 – 9 |
| 90105–06M07 | 3 – 12 |
| 90105–07006 | 5 – 4 |
| 90105–07009 | 2 – 6 |
| 90105–08021 | 3 – 34 |
| 90105–08054 | 11 – 9 |
| 90105–08169 | 11 – 10 |
| 90105–08170 | 11 – 11 |
| 90105–08243 | 6 – 7 |
| 90105–08249 | 19 – 15 |
| 90105–08860 | 29 – 27 |
| | 29 – 28 |
| 90105–10071 | 3 – 5 |
| 90109–06268 | 3 – 33 |
| 90109–06832 | 16 – 20 |
| 90109–06874 | 25 – 17 |
| 90109–06875 | 25 – 18 |
| 90109–08041 | 18 – 17 |

| PART NO. | REF. NO. |
|---|---|
| 90110–06040 | 29 – 23 |
| 90110–06182 | 3 – 24 |
| 90110–06382 | 37 – 4 |
| 90110–06404 | 9 – 4 |
| 90110–06822 | 15 – 21 |
| 90110–08212 | 19 – 2 |
| 90111–06873 | 26 – 33 |
| | 28 – 5 |
| | 28 – 23 |
| 90116–08032 | 6 – 20 |
| 90116–10044 | 7 – 19 |
| 90119–05803 | 27 – 20 |
| 90119–06078 | 2 – 12 |
| 90119–06304 | 27 – 17 |
| | 27 – 39 |
| | 27 – 41 |
| 90119–06311 | 21 – 18 |
| 90119–06832 | 23 – 6 |
| | 26 – 20 |
| | 27 – 14 |
| 90119–06878 | 24 – 20 |
| | 24 – 24 |
| 90119–06880 | 27 – 1 |
| | 28 – 8 |
| | 28 – 26 |
| 90119–06882 | 24 – 22 |
| | 24 – 26 |
| 90119–06889 | 15 – 10 |
| 90119–06891 | 16 – 14 |
| | 17 – 3 |
| 90119–06892 | 28 – 6 |
| | 28 – 17 |
| | 28 – 24 |
| | 28 – 35 |
| 90119–06893 | 15 – 5 |
| | 36 – 53 |
| 90119–069UP | 32 – 5 |
| | 32 – 10 |
| 90119–069UX | 17 – 7 |
| 90119–06MA3 | 22 – 24 |
| 90119–06MA4 | 22 – 4 |
| 90119–08034 | 13 – 4 |
| | 13 – 10 |
| 90119–08096 | 13 – 12 |
| 90119–08097 | 13 – 5 |
| | 13 – 9 |
| 90119–08187 | 8 – 11 |
| | 22 – 6 |

| PART NO. | REF. NO. |
|---|---|
| 90119–08822 | 24 – 17 |
| | 27 – 34 |
| 90119–08823 | 18 – 12 |
| | 25 – 9 |
| | 25 – 10 |
| 90119–08827 | 18 – 13 |
| 90119–08829 | 32 – 26 |
| 90119–08840 | 17 – 5 |
| 90119–08851 | 15 – 35 |
| | 15 – 41 |
| | 36 – 54 |
| 90119–08859 | 25 – 7 |
| | 25 – 8 |
| 90119–08861 | 29 – 55 |
| | 29 – 56 |
| 90119–089U7 | 18 – 20 |
| 90119–089UT | 21 – 1 |
| | 21 – 2 |
| 90119–089UU | 16 – 13 |
| | 38 – 31 |
| 90119–10011 | 7 – 23 |
| 90119–10029 | 13 – 13 |
| 90119–10046 | 7 – 15 |
| 90119–10047 | 7 – 14 |
| 90119–10810 | 15 – 3 |
| | 15 – 33 |
| 90149–06229 | 19 – 8 |
| 90149–10068 | 25 – 6 |
| 90154–06017 | 39 – 15 |
| 90169–049U1 | 33 – 28 |
| 90176–08080 | 6 – 21 |
| 90176–10001 | 7 – 20 |
| 90201–052E8 | 19 – 21 |
| 90201–06028 | 7 – 8 |
| | 10 – 8 |
| 90201–06801 | 17 – 9 |
| | 17 – 12 |
| 90201–068G0 | 37 – 5 |
| 90201–068M4 | 15 – 39 |
| 90201–06906 | 36 – 6 |
| 90201–10801 | 18 – 4 |
| 90201–109U6 | 32 – 14 |
| | 32 – 23 |
| 90201–132G5 | 4 – 20 |
| 90267–329UR | 33 – 29 |
| 90267–48802 | 21 – 35 |
| | 29 – 47 |
| | 34 – 18 |
| 90267–48806 | 23 – 24 |
| | 23 – 28 |
| | 23 – 30 |
| | 23 – 34 |
| | 24 – 16 |
| | 26 – 17 |
| | 31 – 3 |
| | 31 – 4 |
| | 31 – 7 |
| | 33 – 10 |
| | 33 – 13 |
| | 35 – 20 |
| 90267–489U1 | 14 – 44 |
| | 23 – 4 |
| | 26 – 19 |
| | 27 – 12 |
| | 28 – 11 |
| | 28 – 29 |
| | 29 – 39 |
| | 29 – 44 |
| | 32 – 20 |
| | 33 – 44 |
| | 35 – 5 |
| 90267–489U2 | 25 – 13 |
| | 25 – 16 |
| | 33 – 5 |
| 90267–489U6 | 33 – 7 |
| | 38 – 26 |
| 90267–489U8 | 26 – 16 |
| | 29 – 5 |
| | 30 – 13 |
| | 30 – 14 |
| 90280–03047 | 19 – 10 |
| 90387–06119 | 1 – 5 |
| | 21 – 20 |
| | 36 – 16 |
| 90387–06289 | 16 – 18 |
| 90387–06319 | 17 – 8 |
| 90387–06M05 | 19 – 22 |
| | 21 – 23 |
| 90387–08M06 | 15 – 36 |
| | 15 – 42 |
| 90387–08M30 | 17 – 6 |
| 90387–08M37 | 8 – 10 |
| | 22 – 5 |
| 90387–11007 | 7 – 16 |
| 90387–11008 | 7 – 21 |
| 90401–10040 | 5 – 23 |
| 90401–10040 | 9 – 8 |
| 90430–06232 | 11 – 8 |
| 90430–06M03 | 3 – 13 |
| 90430–08209 | 10 – 10 |
| 90430–10007 | 5 – 22 |
| | 9 – 9 |
| | 42 – 7 |
| 90430–12002 | 18 – 19 |
| 90445–18012 | 14 – 10 |
| 90445–20800 | 29 – 9 |
| 90445–20804 | 29 – 7 |
| 90445–21806 | 14 – 1 |
| 90445–21807 | 14 – 4 |
| 90446–24M46 | 15 – 27 |
| 90447–15001 | 15 – 31 |
| 90447–19005 | 14 – 11 |
| 90447–19021 | 14 – 19 |
| 90447–19801 | 14 – 3 |
| 90447–22015 | 12 – 2 |
| 90447–22016 | 12 – 5 |
| 90447–22801 | 14 – 2 |
| 90447–22802 | 14 – 5 |
| 90447–28008 | 2 – 17 |
| 90450–75003 | 7 – 10 |
| | 7 – 25 |
| 90450–90002 | 7 – 26 |
| | 8 – 12 |
| | 8 – 13 |
| 90450–99801 | 35 – 7 |
| | 35 – 12 |
| 90450–99804 | 35 – 8 |
| 90450–99808 | 13 – 18 |
| 90450–99809 | 13 – 19 |
| 90464–20008 | 22 – 25 |
| 90464–24003 | 14 – 43 |
| 90464–31001 | 22 – 21 |
| | 22 – 27 |
| 90464–31002 | 22 – 28 |
| 90464–31827 | 23 – 22 |
| 90464–32801 | 21 – 36 |
| | 23 – 16 |
| | 23 – 17 |
| | 23 – 18 |
| | 23 – 25 |
| | 23 – 27 |
| | 23 – 31 |
| | 24 – 4 |
| | 24 – 7 |
| 90464–32801 | 29 – 42 |
| | 33 – 11 |
| | 33 – 14 |
| | 34 – 16 |
| | 35 – 21 |
| 90464–35132 | 14 – 13 |
| | 22 – 11 |
| 90464–99804 | 23 – 32 |
| | 23 – 35 |
| | 31 – 8 |
| 90465–11829 | 15 – 30 |
| | 29 – 6 |
| | 33 – 38 |
| | 33 – 39 |
| | 33 – 41 |
| 90465–14M66 | 21 – 32 |
| 90467–150A1 | 3 – 31 |
| | 14 – 17 |
| 90467–150A5 | 14 – 39 |
| | 35 – 23 |
| 90467–160A0 | 14 – 12 |
| | 14 – 20 |
| | 14 – 25 |
| | 14 – 27 |
| | 14 – 30 |
| 90467–170A4 | 14 – 23 |
| 90467–170A5 | 14 – 28 |
| 90467–17802 | 34 – 5 |
| 90467–180A5 | 29 – 60 |
| 90467–190A0 | 12 – 3 |
| | 12 – 8 |
| 90467–190A2 | 33 – 19 |
| 90467–200A3 | 12 – 7 |
| | 14 – 8 |
| | 14 – 15 |
| | 14 – 31 |
| | 14 – 35 |
| | 14 – 36 |
| | 29 – 58 |
| 90467–210A0 | 33 – 20 |
| 90467–240A0 | 2 – 18 |
| | 12 – 6 |
| 90467–240A3 | 29 – 59 |
| 90480–19800 | 27 – 19 |
| 90480–21M63 | 7 – 22 |
| 90480–22801 | 8 – 6 |
| 90480–22M15 | 8 – 9 |
| | 22 – 7 |
| 90601–118UF | 15 – 28 |
| | 29 – 3 |
| 90601–155U4 | 16 – 21 |
| | 33 – 34 |
| | 33 – 35 |
| 90601–200U1 | 34 – 8 |
| | 34 – 12 |
| | 34 – 14 |
| | 34 – 20 |
| | 34 – 23 |
| 90601–200U2 | 23 – 36 |
| | 35 – 22 |
| 91314–06060 | 10 – 7 |
| 91317–05010 | 19 – 20 |
| 91317–06014 | 19 – 19 |
| 91380–04030 | 37 – 7 |
| 91380–06016 | 22 – 17 |
| 91380–06020 | 19 – 23 |
| 91380–06025 | 5 – 20 |
| 91809–16002 | 2 – 4 |
| | 2 – 5 |
| 92014–06030 | 5 – 17 |
| 92990–06100 | 20 – 16 |
| 92990–10600 | 22 – 13 |
| 92990–12200 | 18 – 18 |
| | 29 – 20 |
| 92990–20600 | 15 – 17 |
| 9299R–05200 | 29 – 34 |
| | 29 – 35 |
| | 30 – 15 |
| | 30 – 16 |
| 9299R–10200 | 32 – 15 |
| | 32 – 24 |
| 93101–31001 | 15 – 15 |
| | 42 – 28 |
| 93102–29008 | 16 – 4 |
| | 42 – 23 |
| 93102–29009 | 16 – 7 |
| | 42 – 24 |
| 93102–31009 | 15 – 14 |
| | 42 – 27 |
| 93210–06632 | 3 – 27 |
| 93210–11453 | 3 – 3 |
| | 42 – 4 |
| 93210–12016 | 3 – 32 |
| | 42 – 11 |
| 93210–18322 | 11 – 13 |
| | 42 – 10 |
| 93210–21631 | 9 – 6 |
| | 42 – 9 |
| 93210–22MF1 | 16 – 2 |
| | 42 – 22 |
| 93210–24M79 | 1 – 8 |
| | 42 – 12 |
| 93210–30611 | 15 – 24 |
| | 42 – 30 |
| 93210–32172 | 22 – 23 |
| | 42 – 18 |
| 93210–54010 | 15 – 20 |
| | 42 – 29 |
| 93211–70800 | 15 – 7 |
| | 42 – 25 |
| 93306–00809 | 19 – 12 |
| 93306–206Y7 | 15 – 11 |
| 93306–206Y8 | 16 – 6 |
| 93306–355Y0 | 15 – 13 |
| 93410–12003 | 20 – 7 |
| 93450–22174 | 4 – 5 |
| | 4 – 7 |
| 93604–10M03 | 3 – 8 |
| | 7 – 5 |
| | 11 – 5 |
| 93606–12019 | 3 – 7 |
| | 9 – 3 |
| | 13 – 8 |
| | 15 – 32 |
| | 16 – 17 |
| 93608–16M16 | 13 – 3 |
| 93700–06M03 | 16 – 9 |
| 94591–74152 | 5 – 14 |
| 94702–00435 | 22 – 10 |
| 95023–06012 | 6 – 24 |
| | 6 – 27 |
| | 9 – 10 |
| 95024–06014 | 3 – 18 |
| 95024–06020 | 3 – 19 |
| | 10 – 12 |
| 95024–06035 | 10 – 11 |
| 95024–06065 | 7 – 7 |
| 95024–08035 | 13 – 16 |
| 95312–20700 | 15 – 18 |
| 95380–06600 | 17 – 10 |
| | 17 – 13 |
| 95380–06700 | 15 – 40 |
| | 20 – 17 |
| 9538R–06700 | 36 – 7 |

| PART NO. | REF. NO. |
|---|---|
| 95720–06300 | 38 – 16 |
| 9572R–05300 | 29 – 36 |
| | 29 – 37 |
| 9572R–06300 | 33 – 23 |
| 9572R–08300 | 29 – 12 |
| | 29 – 13 |
| | 32 – 35 |
| 9572R–10300 | 18 – 5 |
| | 32 – 16 |
| | 32 – 25 |
| 95814–06012 | 21 – 7 |
| | 21 – 29 |
| 95814–06030 | 5 – 17 |
| 95814–06035 | 3 – 22 |
| 95814–06070 | 3 – 6 |
| 95814–08020 | 10 – 9 |
| 95814–08055 | 7 – 6 |
| 95817–06014 | 10 – 6 |
| 95824–06025 | 1 – 6 |
| 97080–08035 | 38 – 27 |
| 97513–05514 | 19 – 9 |
| 97513–06555 | 2 – 9 |
| 97513–08530 | 20 – 15 |
| 97513–08535 | 6 – 19 |
| 97780–60025 | 21 – 22 |
| 97780–60516 | 8 – 5 |
| 9788R–05025 | 29 – 33 |
| 97E95–06516 | 22 – 15 |
| 97E95–06612 | 21 – 27 |
| 97E95–08540 | 3 – 14 |
| 99009–24700 | 4 – 21 |
| 99009–62500 | 16 – 5 |
| 99009–72500 | 19 – 14 |
| 99530–10114 | 3 – 2 |
| | 3 – 25 |
| | 19 – 16 |
| 99590–14016 | 7 – 13 |
| | 15 – 2 |
| 99780–12600 | 29 – 19 |