YAMAHA

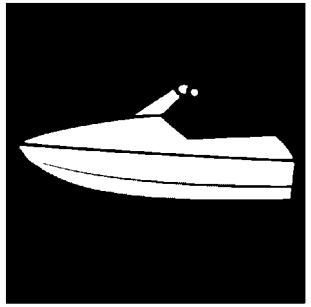

PARTS CATALOGUE

WaveRunner EX Sport
EX1050B-X (F3YR /6GAM/6GA2)

YAMAHA
GENUINE
Parts & Accessories

1XF3Y-100E5

( )

EX1050B-X
PARTS CATALOGUE
©2021 by Yamaha Motor Co., Ltd.
1st edition, September 2021
All rights reserved.
Any reprinting or unauthorized use
without the written permission of
Yamaha Motor Co., Ltd.
is expressly prohibited.
Printed in Japan.

FOREWORD

This Parts Catalogue is related to the parts for the model(s) on the cover page. When you are ordering replacement parts, please refer to this Parts Catalogue and quote both part numbers and part names correctly.

1. Modifications or additions which have been made after the issue of the Parts Catalogue will be announced in the Parts News.
   It is advisable that you make the necessary corrections to the Parts Catalogue according to the Parts News.

2. Abbreviations
   The following abbreviations are used in this Parts Catalogue.

   "UR" Use specified parts number.

   "UN" Use as many as needed.

   "AP" Alternate Parts

   "LM" Locally Made (Parts need to be ordered locally)

   "F#" Frame No. (Applicable machine No.)

   "O/S" Over Size

3. The number of components for assembly
   - Parts, which are to be supplied in an assembly, are listed with a dot (.) in front of the part name as shown below.
   - The numeral appearing to the right of each component part indicates the quantity of parts for each assembly unit.

PART NO.	DESCRIPTION	Q'TY	REMARKS
2F5–83310–60	FRONT FLASHER LIGHT ASSY	2	
115–83311–60	.BULB (6V–18W)	1	

4. Applicable colours of graphics are represented in the "REMARKS" as shown below.

PART NO.	DESCRIPTION	Q'TY	REMARKS
2N4–24110–00–X5	FUEL TANK COMP.	2	MXR
3J1–24240–10	.GRAPHIC, FUEL TANK	1	FOR MXR

5. Note that the illustrations for reference in finding parts numbers are not to be used for assembling. When assembling, please use the applicable service manual.

6. The asterisk (*) before a reference number indicates modified items after the first edition.

7. Applicable Serial No.

Engine Serial No.

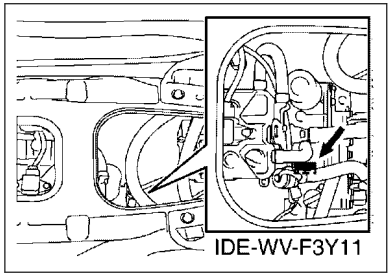

Primary Identification No.

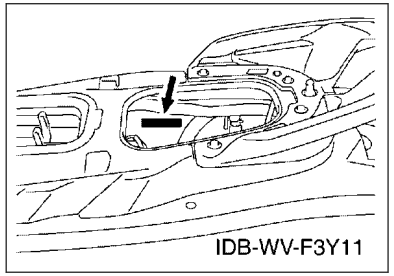

8. Applicable Colour Code (The (*) mark shows Model colour.)

Abbreviation	Colour Name	Colour Code
PURW(*)	PURE WHITE	0240
VLGS6(*)	VIVID LEAF GREEN SOLID 6	1720

9. Quantity Column Information

Column No.	Name Of Q'ty Column	Destination
1	F3YR	CANADA, EUROPE

10. Applicable Starting Serial No.

Engine Serial No.

Serial No.	Name Of Q'ty Column	Model Code

Primary Identification No.

Serial No.	Name Of Q'ty Column	Model Code
F3Y-838821	F3YR	F3YR

CONTENTS

CYLINDER.....1
CRANKCASE..... 2
CRANKSHAFT & PISTON.....4
VALVE..... 6
INTAKE.....8
INTAKE 2.....9
OIL PUMP.....10
OIL COOLER.....11
EXHAUST 1.....13
EXHAUST 2.....14
JET UNIT 1.....16
JET UNIT 2.....18
JET UNIT 3.....19
GENERATOR.....20
STARTING MOTOR..... 21
ELECTRICAL 1.....22
ELECTRICAL 2.....24
ELECTRICAL 3.....25
ENGINE MOUNT.....27
ENGINE HATCH 1.....28
ENGINE HATCH 2.....29
HULL & DECK..... 30
GUNWALE & MAT.....32
VENTILATION..... 34
SEAT & UNDER LOCKER..... 35
FUEL TANK.....36
EXHAUST 3.....38
CONTROL CABLE..... 39
STEERING 1..... 40
STEERING 2..... 41
STEERING 3..... 42
GRAPHICS.....43
IMPORTANT LABELS.....44
REPAIR KIT 1.....45

INDEX

NUMERICAL INDEX.....46

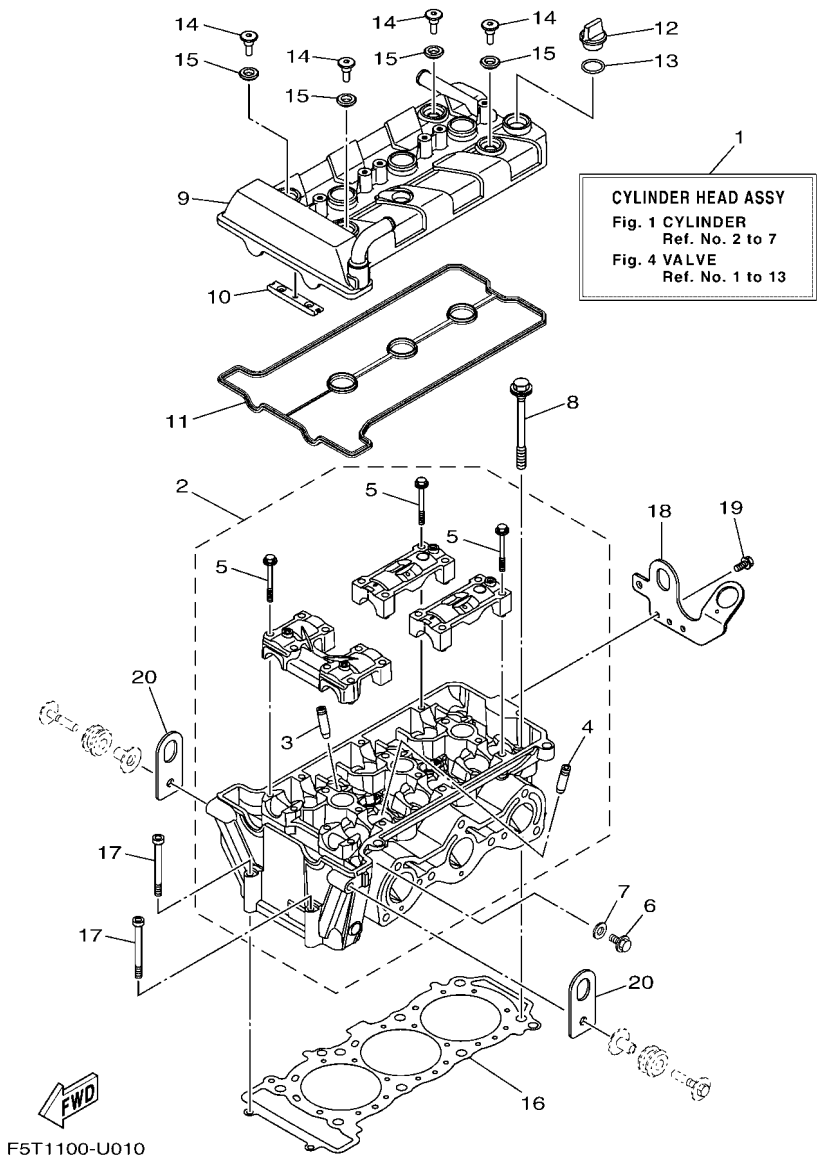

FIG. 1 CYLINDER

REF. NO.	PART NO.	DESCRIPTION	F3YR					REMARKS
1	6EY–11110–00	CYLINDER HEAD COMPLETE	1					
2	6EY–11102–00	CYLINDER HEAD ASSY	1					
3	2C0–11133–11	.GUIDE, VALVE 1	6					
4	8HF–11134–10	.GUIDE, VALVE 2	6					
5	90105–06027	.BOLT, FLANGE	16					
6	95E34–08012	BOLT, FLANGE DEEP RECESS	1					
7	90430–08119	GASKET	1					
8	90119–10004	BOLT, WITH WASHER	8					
9	6EY–11191–10	COVER, CYLINDER HEAD 1	1					
10	5BE–12241–01	GUIDE, STOPPER 2	1					
11	6EY–11193–00	GASKET, HEAD COVER 1	1					
12	3Y1–15363–10	PLUG, OIL	1					
13	93210–19123	O-RING	1					
14	90109–066F0	BOLT	4					
15	5VY–1111G–00	RUBBER, MOUNT 1	4					
16	6EY–11181–00	GASKET, CYLINDER HEAD 1	1					
17	91314–06065	BOLT, HEXAGON SOCKET HEAD	2					
18	6EY–1111E–10	HANGER, ENGINE 2	1					
19	90119–06078	BOLT, WITH WASHER	2					
20	6EY–11119–00	HANGER, ENGINE	2					

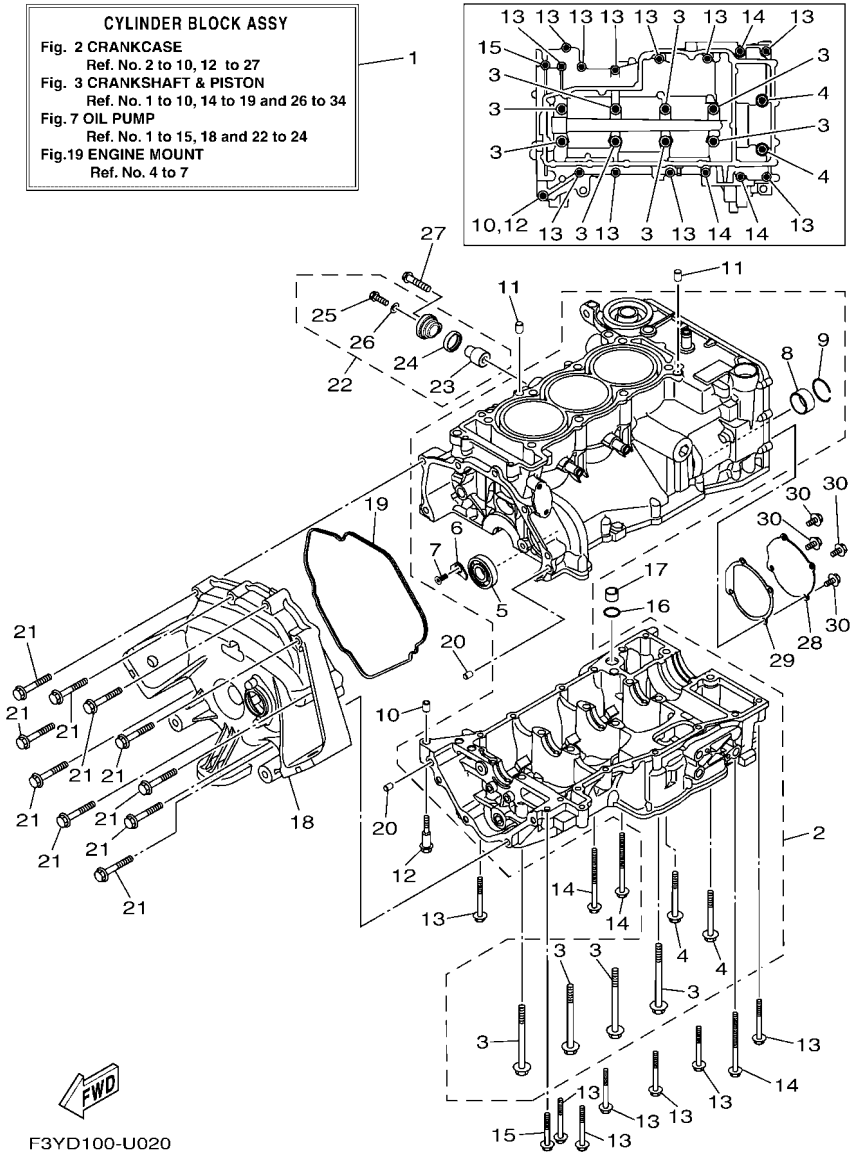

FIG. 2 CRANKCASE

REF. NO.	PART NO.	DESCRIPTION	F3YR					REMARKS
1	6EY–W009B–10	CYLINDER BLOCK ASSY	1					
2	6EY–15109–09	CRANKCASE ASSY	1					
3	90119–09004	.BOLT, WITH WASHER	8					
4	95812–08070	.BOLT, FLANGE	2					
5	93306–30323	.BEARING	1					
6	4JT–15381–01	.PLATE, BEARING COVER	1					
7	90151–06024	.SCREW, COUNTERSUNK	1					
8	8ES–11428–01	.BEARING 1	1					
9	93450–32152	.CIRCLIP	1					
10	99530–10014	PIN, DOWEL	1					
11	99530–10114	PIN, DOWEL	2					
12	90109–06308	BOLT	1					
13	95814–06055	BOLT, FLANGE	11					
14	95814–06085	BOLT, FLANGE	3					
15	95814–06045	BOLT, FLANGE	1					
16	93210–17010	O-RING	1					
17	8ES–13284–00	PIPE	1					
18	6EY–15421–00	COVER, CRANKCASE 2	1					
19	6EY–15461–00	GASKET, CRANKCASE COVER 2	1					
20	99590–08012	PIN, DOWEL	2					
21	97513–08555	BOLT, WITH WASHER	10					
22	69J–11301–11	ANODE COVER ASSY	1					
23	68V–11325–02	.ANODE	1					
24	67F–11328–01	.GROMMET, ANODE	1					
25	90105–06M07	.BOLT, FLANGE	1					
26	90430–06M03	.GASKET	1					
27	97E95–08540	BOLT, HEXAGON W/W DEEP RECESS	1					

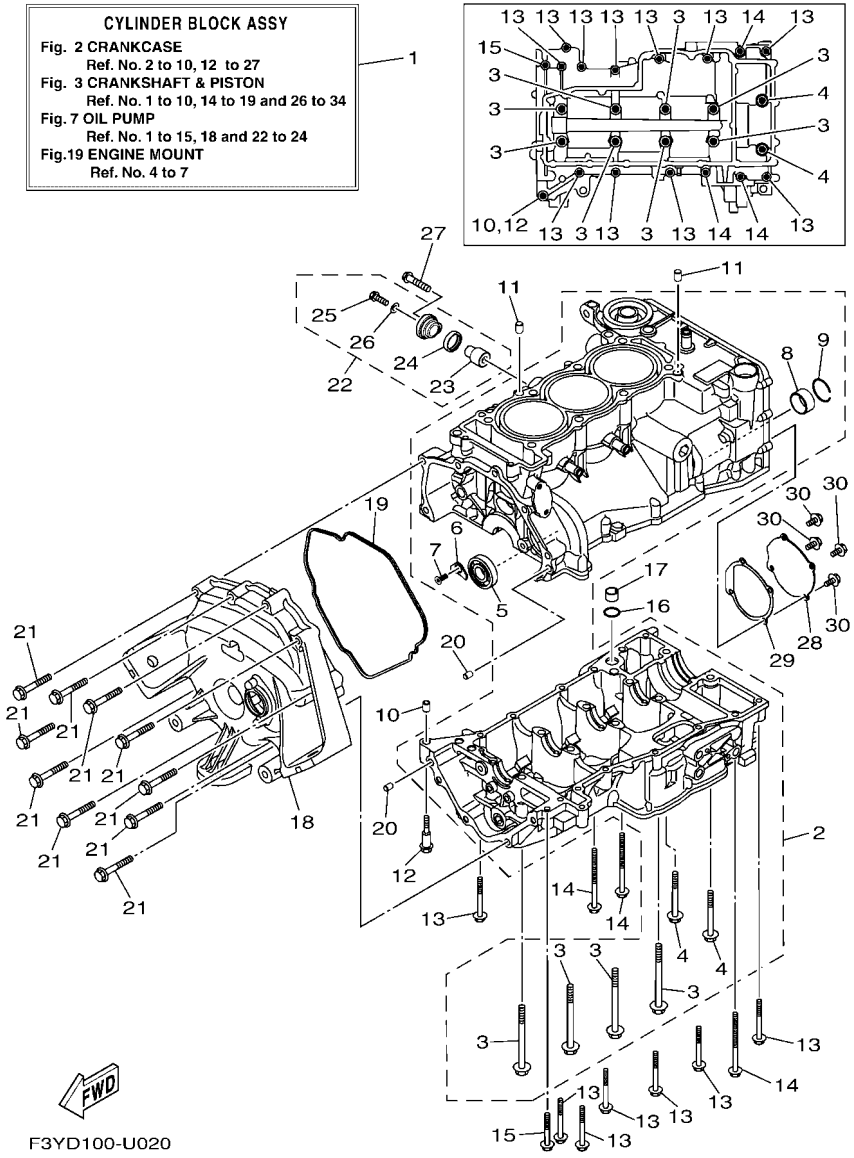

FIG. 2 CRANKCASE

REF. NO.	PART NO.	DESCRIPTION	F3YR					REMARKS
28	6EY–15589–01	PLATE	1					
29	6EY–15463–01	GASKET, 2	1					
30	95E34–06012	BOLT, FLANGE DEEP RECESS	4					

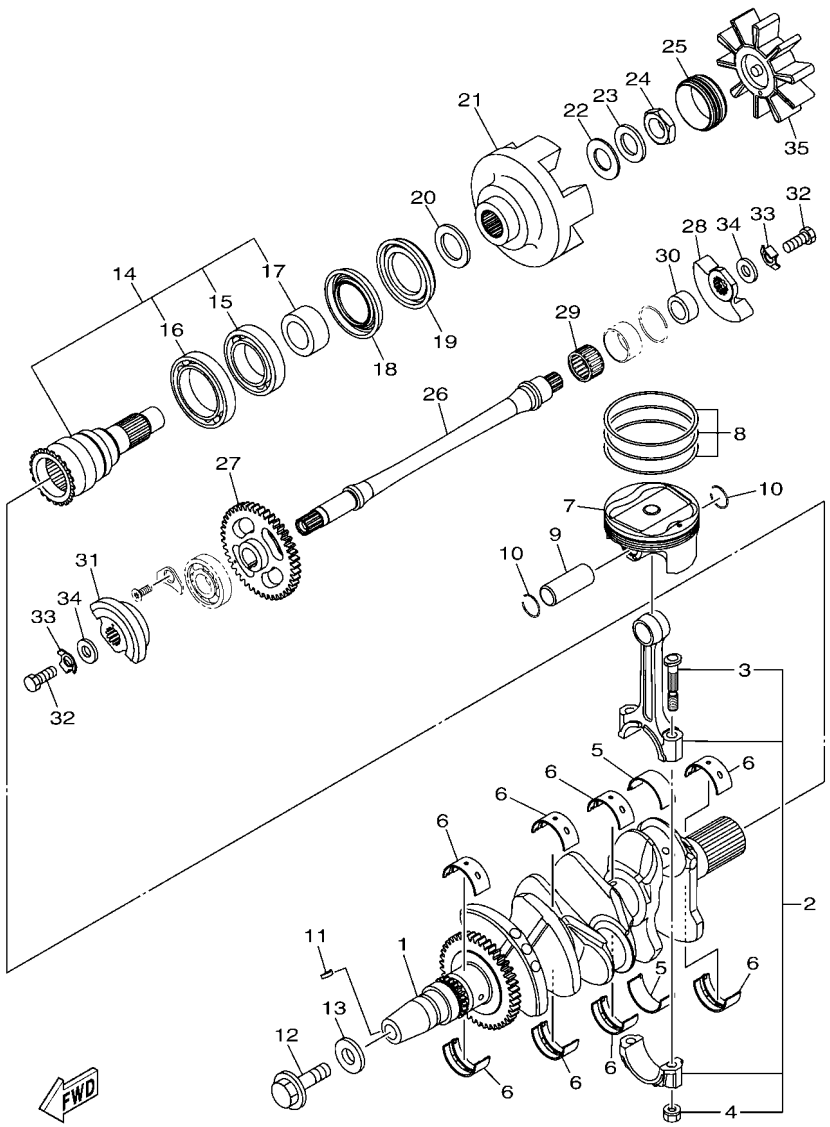

F3YD100-U031

FIG. 3 CRANKSHAFT & PISTON

REF. NO.	PART NO.	DESCRIPTION	F3YR					REMARKS
1	6EY–11400–00	CRANKSHAFT ASSY	1					
2	B0F–11650–00	CONNECTING ROD ASSY	3					
3	5JW–11654–00	.BOLT, CONNECTING ROD	2					
4	90179–08327	.NUT	2					
5	5JW–11656–00	PLANE BEARING, CONNECTING ROD	6					UR BLUE
	5JW–11656–10	PLANE BEARING, CONNECTING ROD	6					UR BLACK
	5JW–11656–20	PLANE BEARING, CONNECTING ROD	6					UR BROWN
	5JW–11656–30	PLANE BEARING, CONNECTING ROD	6					UR GREEN
	5JW–11656–40	PLANE BEARING, CONNECTING ROD	6					UR YELLOW
	5JW–11656–50	PLANE BEARING, CONNECTING ROD	6					UR PINK
6	3LD–11416–10	PLANE BEARING, CRANKSHAFT 1	8					UR BLACK
	3LD–11416–20	PLANE BEARING, CRANKSHAFT 1	8					UR BROWN
	3LD–11416–30	PLANE BEARING, CRANKSHAFT 1	8					UR GREEN
	3LD–11416–40	PLANE BEARING, CRANKSHAFT 1	8					UR YELLOW
	3LD–11416–50	PLANE BEARING, CRANKSHAFT 1	8					UR PINK
	3LD–11416–60	PLANE BEARING, CRANKSHAFT 1	8					UR RED
	3LD–11416–70	PLANE BEARING, CRANKSHAFT 1	8					UR WHITE
7	8KH–11631–00	PISTON (STD)	3					
8	8KH–11603–02	PISTON RING SET (STD)	3					
9	6EY–11633–00	PIN, PISTON	3					
10	93450–19095	CIRCLIP	6					
11	90280–03045	KEY, WOODRUFF	1					
12	90105–12101	BOLT, FLANGE	1					
13	90201–121H0	WASHER, PLATE	1					
14	6EY–11406–00	SHAFT ASSY	1					
15	93306–00702	.BEARING	1					
16	93306–90901	.BEARING	1					

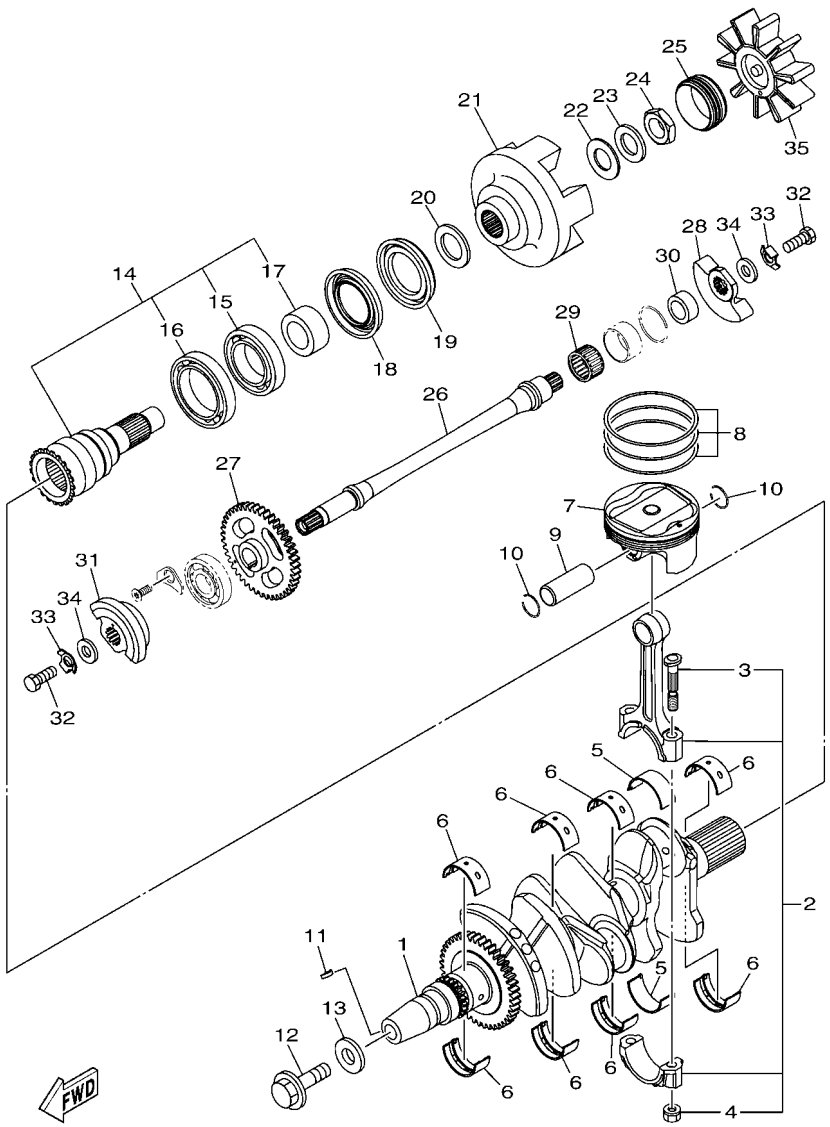

FIG. 3 CRANKSHAFT & PISTON

REF. NO.	PART NO.	DESCRIPTION	F3YR					REMARKS
17	6EY–11917–00	.COLLAR	1					
18	93101–40001	OIL SEAL	1					
19	93101–40002	OIL SEAL	1					
20	6EY–11557–00	WASHER 1	1					
21	6JF–11571–00	FLYWHEEL	1					
22	90201–20030	WASHER, PLATE	1					
23	90208–20001	WASHER, CONICAL SPRING	1					
24	90179–20010	NUT	1					
25	6EY–45155–00	CAP	1					
26	2HC–11407–00	SHAFT ASSY., 2	1					
27	6EY–11531–00	GEAR, BALANCE WEIGHT	1					
28	8ES–11454–00	WEIGHT 1	1					
29	93310–42239	BEARING	1					
30	6EY–11478–00	COLLAR	1					
31	2HC–11464–00	WEIGHT 2	1					
32	97012–10025	BOLT	2					
33	90215–10003	WASHER, LOCK	2					
34	90201–10591	WASHER, PLATE	2					
35	6EY–4581J–00	RUBBER SHAFT COUPLING	1					

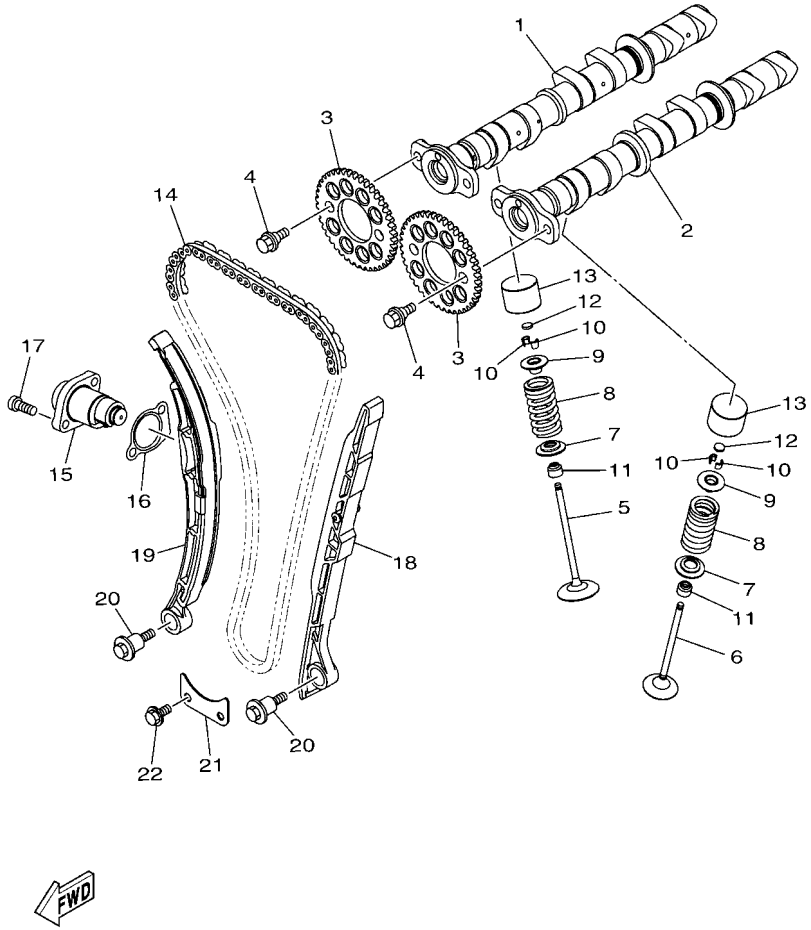

F4G1100-R040

FIG. 4 VALVE

REF. NO.	PART NO.	DESCRIPTION	F3YR					REMARKS
1	6EY–12170–00	CAMSHAFT ASSY 1	1					
2	6EY–12180–00	CAMSHAFT ASSY 2	1					
3	2HC–12176–00	SPROCKET, CAM CHAIN	2					
4	90105–07004	BOLT, FLANGE	4					
5	8GL–12111–10	VALVE, INTAKE	6					
6	8GL–12121–10	VALVE, EXHAUST	6					
7	1RC–12116–00	SEAT, VALVE SPRING	12					
8	8GL–12113–00	SPRING, VALVE INNER	12					
9	3D7–12117–00	RETAINER, VALVE SPRING	12					
10	1WG–12118–00	LOCK, VALVE SPRING RETAINER	24					
11	2HC–12119–00	SEAL, VALVE STEM	12					
12	1HX–12168–00	PAD, ADJUSTING 2 (1.20)	12					UR
	1HX–12168–20	PAD, ADJUSTING 2 (1.25)	12					UR
	1HX–12168–40	PAD, ADJUSTING 2 (1.30)	12					UR
	1HX–12168–60	PAD, ADJUSTING 2 (1.35)	12					UR
	1HX–12168–80	PAD, ADJUSTING 2 (1.40)	12					UR
	1HX–12168–A0	PAD, ADJUSTING 2 (1.45)	12					UR
	1HX–12168–F0	PAD, ADJUSTING 2 (1.50)	12					UR
	1HX–12168–H1	PAD, ADJUSTING 2 (1.55)	12					UR
	1HX–12168–K1	PAD, ADJUSTING 2 (1.60)	12					UR
	1HX–12168–M1	PAD, ADJUSTING 2 (1.65)	12					UR
	1HX–12168–R1	PAD, ADJUSTING 2 (1.70)	12					UR
	1HX–12168–U1	PAD, ADJUSTING 2 (1.75)	12					UR
	1HX–12168–W1	PAD, ADJUSTING 2 (1.80)	12					UR
	1HX–12168–Y1	PAD, ADJUSTING 2 (1.85)	12					UR
	1HX–12169–11	PAD, ADJUSTING 2 (1.90)	12					UR
	1HX–12169–31	PAD, ADJUSTING 2 (1.95)	12					UR

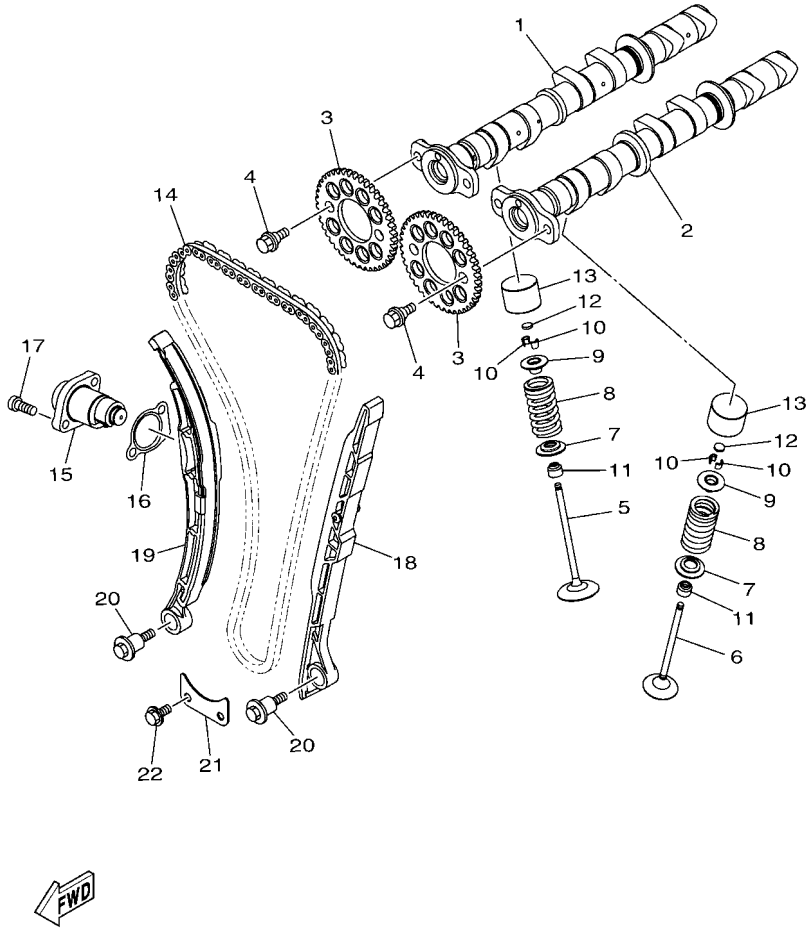

F4G1100-R040

FIG. 4 VALVE

REF. NO.	PART NO.	DESCRIPTION	F3YR					REMARKS
12	1HX–12169–50	PAD, ADJUSTING 2 (2.00)	12					UR
	1HX–12169–70	PAD, ADJUSTING 2 (2.05)	12					UR
	1HX–12169–90	PAD, ADJUSTING 2 (2.10)	12					UR
	1HX–12169–E0	PAD, ADJUSTING 2 (2.15)	12					UR
	1HX–12169–G0	PAD, ADJUSTING 2 (2.20)	12					UR
	1HX–12169–J0	PAD, ADJUSTING 2 (2.25)	12					UR
	1HX–12169–L0	PAD, ADJUSTING 2 (2.30)	12					UR
	1HX–12169–N0	PAD, ADJUSTING 2 (2.35)	12					UR
	1HX–12169–T0	PAD, ADJUSTING 2 (2.40)	12					UR
13	6EY–12153–01	LIFTER, VALVE	12					
14	94591–57140	CHAIN (98RH2010-140M)	1					
15	8KH–12210–00	TENSIONER ASSY, CAM CHAIN	1					
16	2C0–12213–00	GASKET, TENSIONER CASE	1					
17	90110–06274	BOLT, HEXAGON SOCKET HEAD	2					
18	6EY–12251–00	DAMPER, CHAIN 1	1					
19	2HC–12252–00	DAMPER, CHAIN 2	1					
20	90109–06295	BOLT	2					
21	6EY–12279–00	PLATE	1					
22	95812–06012	BOLT, FLANGE	2					

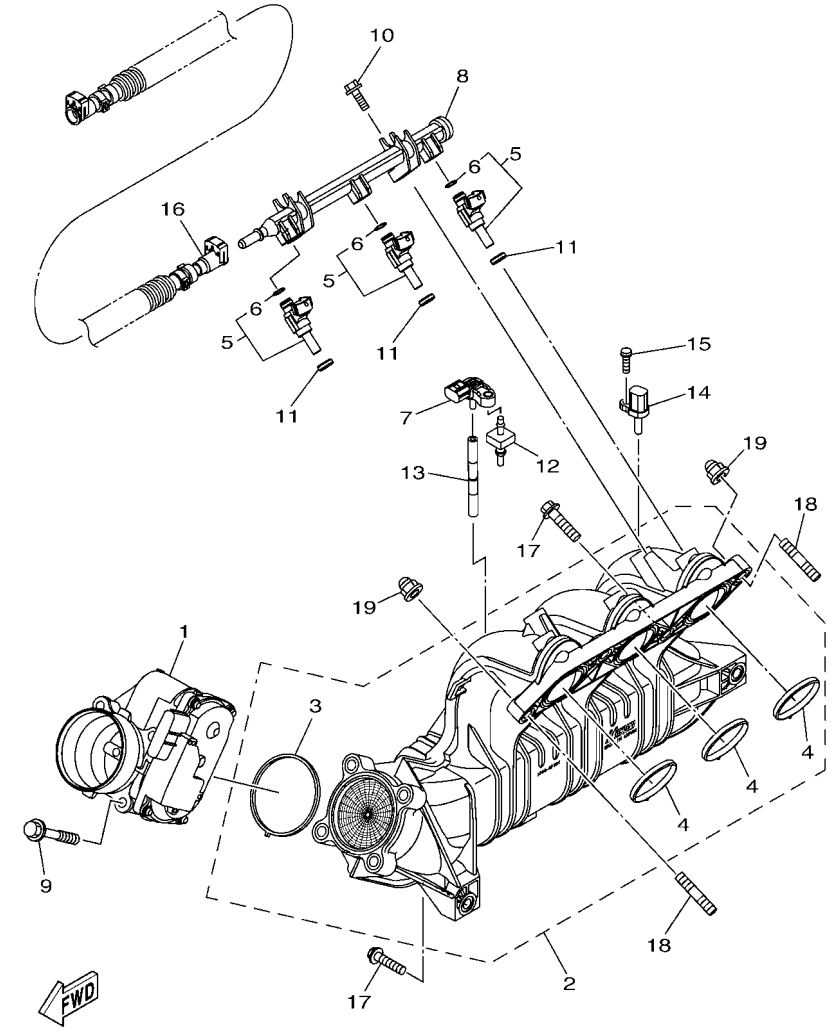

F3Y7100-T050

FIG. 5 INTAKE

REF. NO.	PART NO.	DESCRIPTION	F3YR					REMARKS
1	6EY–13750–00	THROTTLE BODY ASSY	1					
2	6EY–13641–02	MANIFOLD, INTAKE 1	1					
3	6EY–14156–00	.GASKET, INSULATING	1					
4	6EY–14126–00	.GASKET	3					
5	2HC–13761–00	INJECTOR	3					
6	68V–1416A–00	.O-RING	1					
7	5S7–82380–00	SENSOR, PRESSURE	1					
8	6EY–12880–00	DELIVERY PIPE	1					
9	90105–08243	BOLT, FLANGE	4					
10	95814–06020	BOLT, FLANGE	2					
11	8FP–13556–10	GASKET, MANIFOLD	3					
12	6BH–14445–00	GROMMET	1					
13	6EY–13532–00	HOSE, VACUUM SENSING 3	1					
14	8FP–85886–00	SENSOR, AIR TEMPERATURE	1					
15	97702–50520	SCREW, TAPPING	1					
16	6CN–2450B–10	FUEL HOSE ASSY	1					
17	97513–08535	BOLT, WITH WASHER	4					
18	95612–08625	BOLT, STUD	2					
19	90176–08080	NUT, CROWN	2					

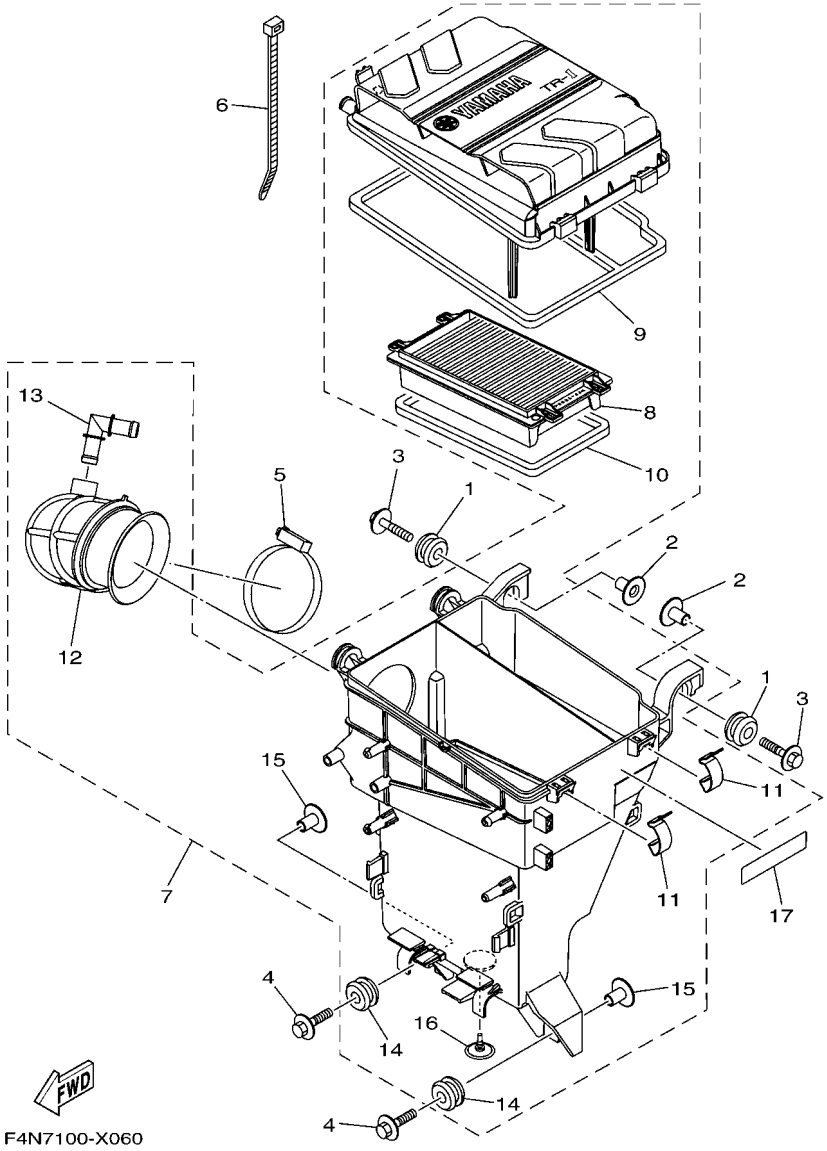

FIG. 6 INTAKE 2

REF. NO.	PART NO.	DESCRIPTION	F3YR					REMARKS
1	90480–22M15	GROMMET	2					
2	90387–08M37	COLLAR	2					
3	90119–08169	BOLT, WITH WASHER	2					
4	90119–08187	BOLT, WITH WASHER	2					
5	90450–90002	HOSE CLAMP ASSY	1					
6	90465–13M18	CLAMP	1					
7	6EY–14410–10	AIR CLEANER ASSY.	1					
8	6EY–14451–00	.ELEMENT, AIR CLEANER	1					
9	6EY–14462–00	.SEAL	1					
10	6EY–14452–00	.SEAL	1					
11	6EY–14436–00	.HOOK	2					
12	6EY–14419–00	.PIPE	1					
13	6EY–14485–00	.PIPE, JOINT	1					
14	90480–22M15	.GROMMET	2					
15	90387–08M37	.COLLAR	2					
16	6EY–14470–01	.VALVE	1					
17	60E–83627–00	LABEL, CAUTION 7	1					

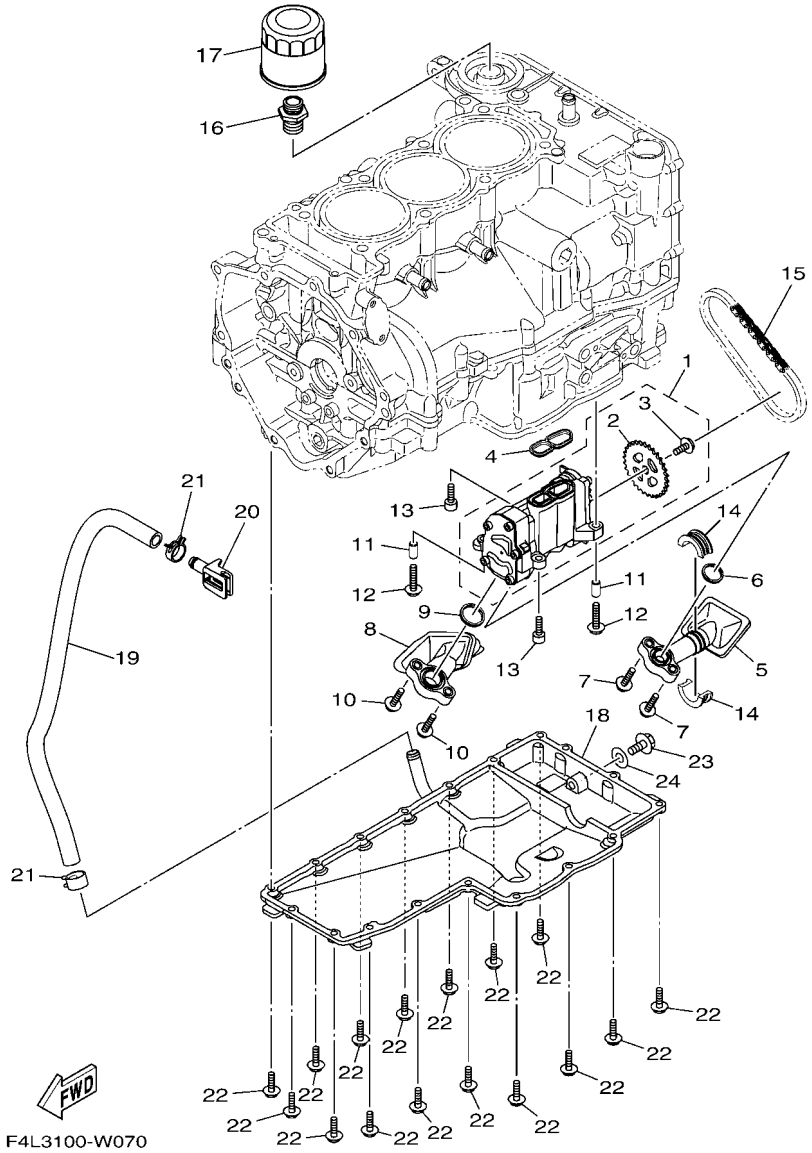

FIG. 7 OIL PUMP

REF. NO.	PART NO.	DESCRIPTION	F3YR					REMARKS
1	6EY–13300–00	OIL PUMP ASSY	1					
2	6EY–13355–00	.SPROCKET, DRIVEN	1					
3	90149–06190	.SCREW	1					
4	6EY–13563–00	GASKET	1					
5	6EY–13405–00	OIL PIPE COMP. 1	1					
6	6EY–13477–00	GASKET	1					
7	90110–06172	BOLT, HEXAGON SOCKET HEAD	2					
8	6EY–13406–00	OIL PIPE COMP. 2	1					
9	6EY–13476–00	GASKET	1					
10	90110–06172	BOLT, HEXAGON SOCKET HEAD	2					
11	99530–08016	PIN, DOWEL	2					
12	90110–06287	BOLT, HEXAGON SOCKET HEAD	2					
13	90110–06335	BOLT, HEXAGON SOCKET HEAD	2					
14	6EY–15486–00	GROMMET	2					
15	94580–25060	CHAIN (DID25 60LE)	1					
16	90401–20008	BOLT, UNION	1					
17	5GH–13440–61	ELEMENT ASSY, OIL CLEANER	1					
18	6EY–13417–10	COVER, STRAINER	1					
19	90445–18M06	HOSE (L500)	1					
20	6EY–13455–00	PLUG	1					
21	90467–170A5	CLIP	2					
22	95E34–06020	BOLT, FLANGE DEEP RECESS	18					
23	95814–08020	BOLT, FLANGE	1					
24	90430–08209	GASKET	1					

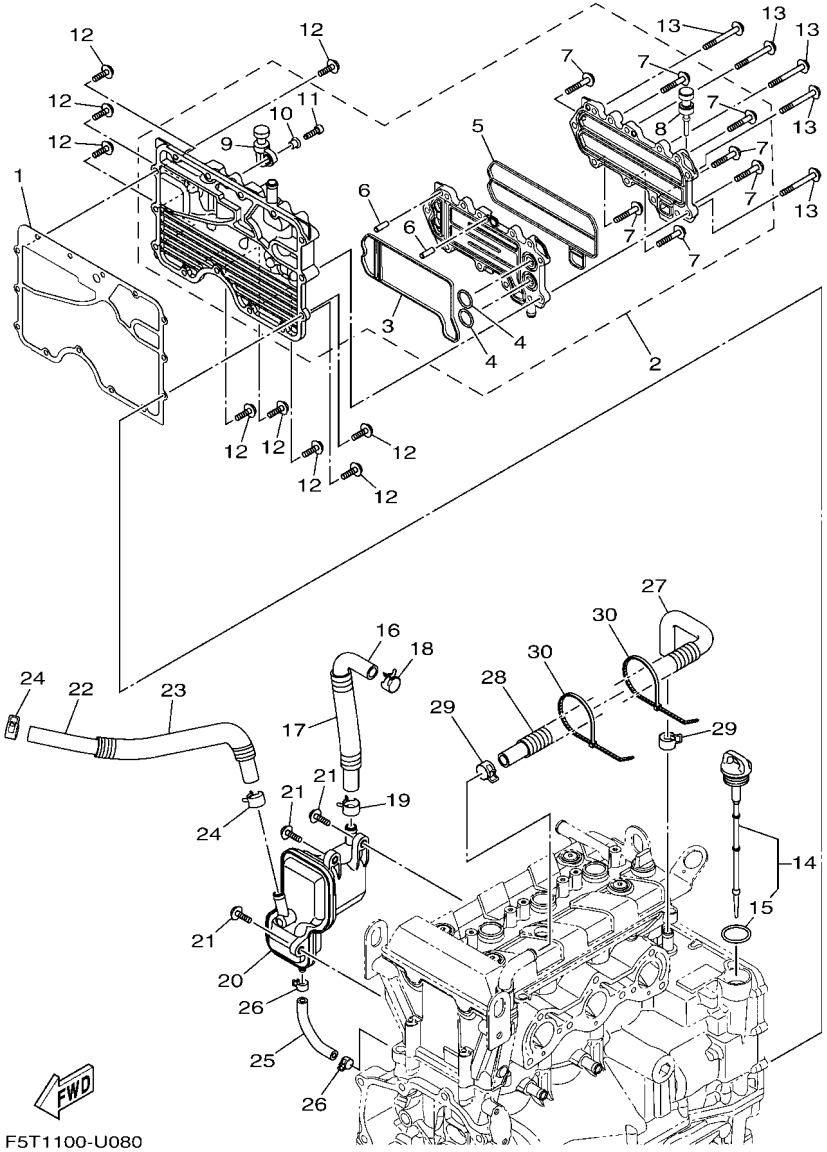

F5T1100-U080

FIG. 8 OIL COOLER

REF. NO.	PART NO.	DESCRIPTION	F3YR					REMARKS
1	6EY–15453–00	GASKET	1					
2	6EY–13470–01	OIL COOLER ASSY	1					
3	6EY–13556–00	.GASKET, MANIFOLD	1					
4	93210–19522	.O-RING	2					
5	6EY–13557–00	.GASKET	1					
6	93606–19M23	.PIN, DOWEL	2					
7	95814–06035	.BOLT, FLANGE	7					
8	90480–06M46	.GROMMET	1					
9	6S5–81364–11	.GROMMET	1					
10	90387–06M05	.COLLAR	1					
11	91380–06020	.BOLT	1					
12	95814–06020	BOLT, FLANGE	9					
13	95814–06055	BOLT, FLANGE	5					
14	6EY–15362–10	PLUG, OIL LEVEL	1					
15	93210–24M79	.O-RING	1					
16	6EY–11166–10	PIPE, BREATHER 1	1					
17	90447–19004	HOSE, WITH SPRING (L130)	1					
18	90467–200A3	CLIP	1					
19	90467–170A4	CLIP	1					
20	6EY–11164–00	SEPERATOR, OIL	1					
21	90105–06M15	BOLT, FLANGE	3					
22	90445–18020	HOSE (L420)	1					
23	90446–24MF4	HOSE (L350)	1					
24	90467–170A4	CLIP	2					
25	6EY–11125–00	PIPE, BREATHER 4	1					
26	90467–110A1	CLIP	2					
27	6EY–11126–10	PIPE, BREATHER 3	1					

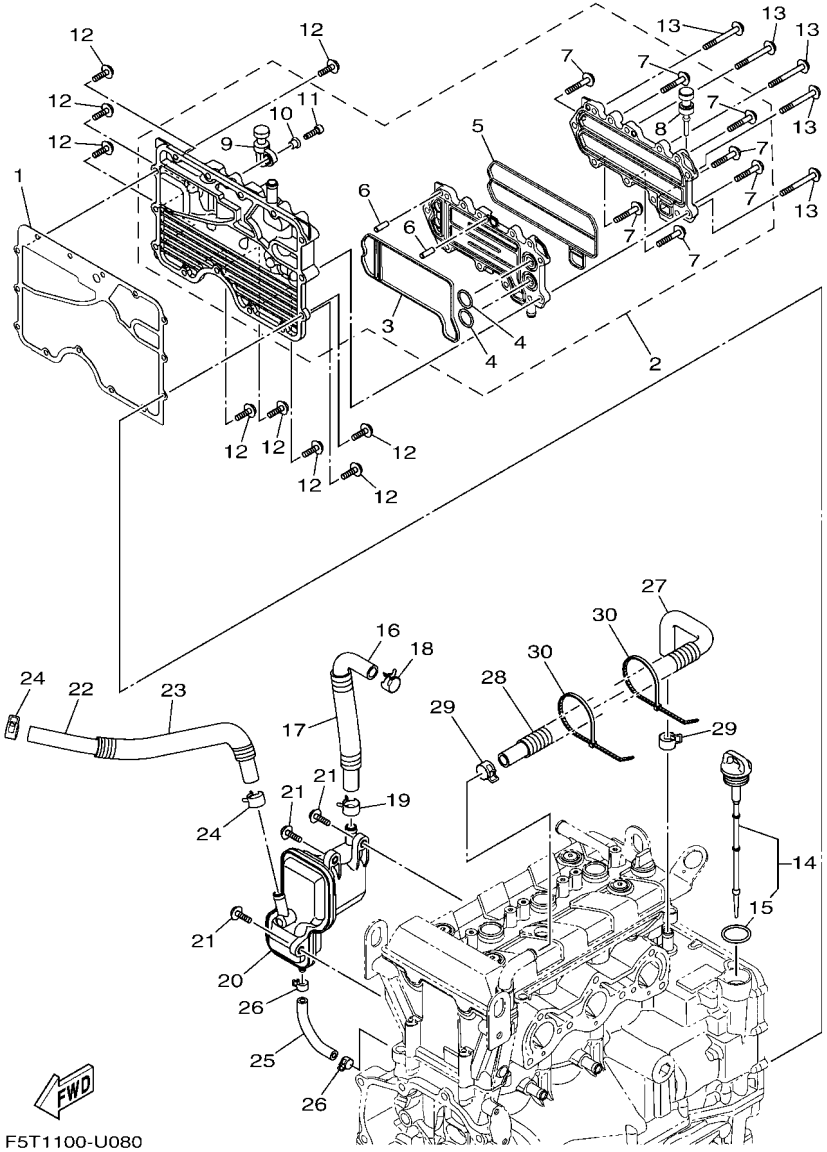

FIG. 8 OIL COOLER

REF. NO.	PART NO.	DESCRIPTION	F3YR					REMARKS
28	90447–19014	TUBE (L300)	1					
29	90467–170A4	CLIP	2					
30	90464–35132	CLAMP	2					

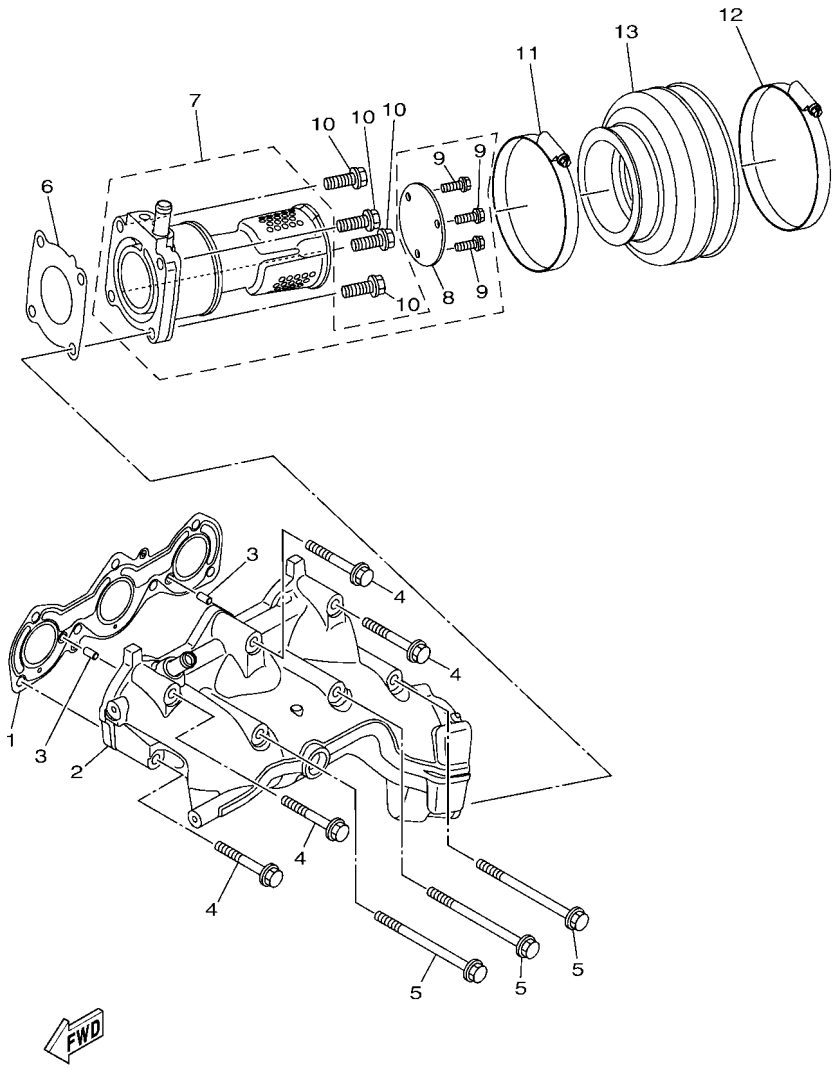

F3YD100-U090

FIG. 9 EXHAUST 1

REF. NO.	PART NO.	DESCRIPTION	F3YR					REMARKS
1	6GA–14613–00	GASKET, EXHAUST PIPE	1					
2	6GA–14711–00	MUFFLER 1	1					
3	93606–12019	PIN, DOWEL	2					
4	90119–08034	BOLT, WITH WASHER	4					
5	90119–08097	BOLT, WITH WASHER	3					
6	6GA–14739–00	GASKET, MUFFLER DAMPER 1	1					
7	6GA–14784–00	PIPE, TAIL	1					
8	6GA–1469W–00	.PLATE, SILENCER 6	1					
9	95E34–06016	.BOLT, FLANGE DEEP RECESS	3					
10	95024–08030	BOLT,FLG,(SMALL HEAD)	4					
11	90450–99808	HOSE CLAMP ASSY	1					
12	90450–99810	HOSE CLAMP ASSY	1					
13	6GA–14752–00	PIPE, OUTLET	1					

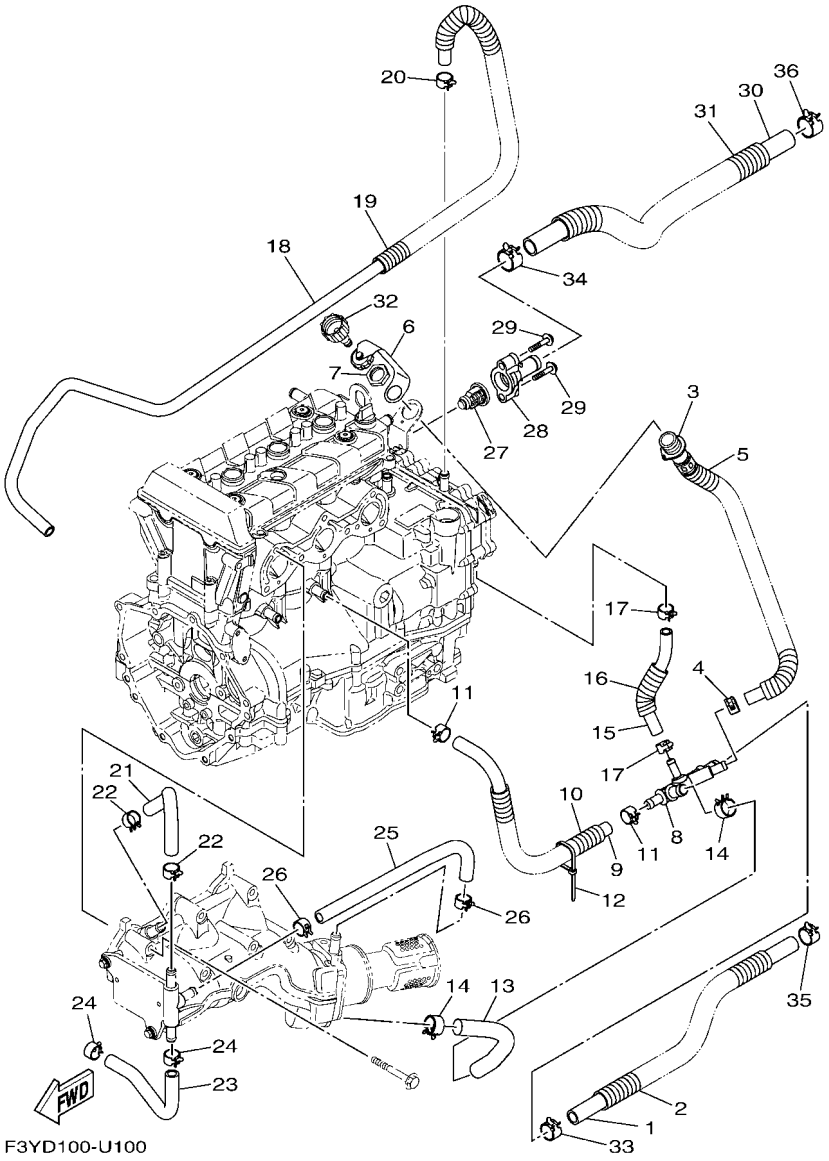

F3YD100-U100

FIG. 10 EXHAUST 2

REF. NO.	PART NO.	DESCRIPTION	F3YR					REMARKS
1	6GA–E243E–00	HOSE 2	1					
2	F3Y–U773D–10	TUBE	1					
3	6EY–12580–00	JOINT ASSY	1					
4	90467–150A5	CLIP	1					
5	90446–24M89	HOSE (L420)	1					
6	6EY–84385–00	CAP,1	1					
7	EU0–61652–00	NUT	1					
8	6EY–12584–00	JOINT, HOSE 3	1					
9	90445–18012	HOSE (L400)	1					
10	90447–19014	TUBE (L300)	1					
11	90467–160A0	CLIP	2					
12	90464–35132	CLAMP	1					
13	90445–21015	HOSE (L170)	1					
14	90467–200A3	CLIP	2					
15	90445–16019	HOSE (L160)	1					
16	90446–24M44	HOSE (L70)	1					
17	90467–150A1	CLIP	2					
18	90445–16020	HOSE (L1600)	1					
19	6EY–24864–00	TUBE	1					
20	90467–160A0	CLIP	1					
21	6EY–12577–00	HOSE 2	1					
22	90467–160A0	CLIP	2					
23	6S5–12579–00	HOSE 4	1					
24	90467–160A0	CLIP	2					
25	90445–18018	HOSE (L370)	1					
26	90467–160A0	CLIP	2					
27	6D3–12411–00	THERMOSTAT	1					

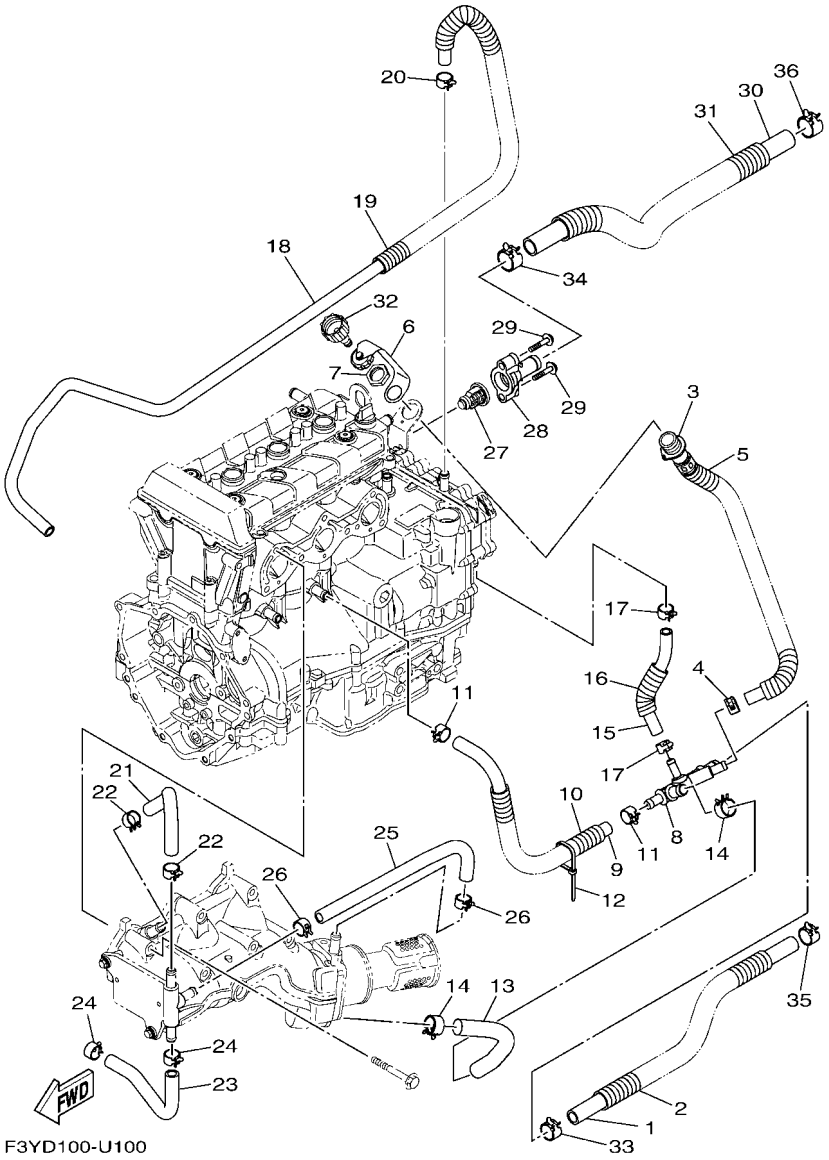

FIG. 10 EXHAUST 2

REF. NO.	PART NO.	DESCRIPTION	F3YR					REMARKS
28	6EY–12413–00	COVER, THERMOSTAT	1					
29	90105–06035	BOLT, FLANGE	2					
30	6GA–E243A–00	HOSE 1	1					
31	F3Y–U773D–20	TUBE	1					
32	67X–E2590–00	CONDUCTION ASSY	1					FOR CAN
	67X–E2590–10	CONDUCTION ASSY	1					FOR EUR
33	90467–200A3	CLIP	1					
34	90467–240A0	CLIP	1					
35	90467–200A3	CLIP	1					
36	90467–240A3	CLIP	1					

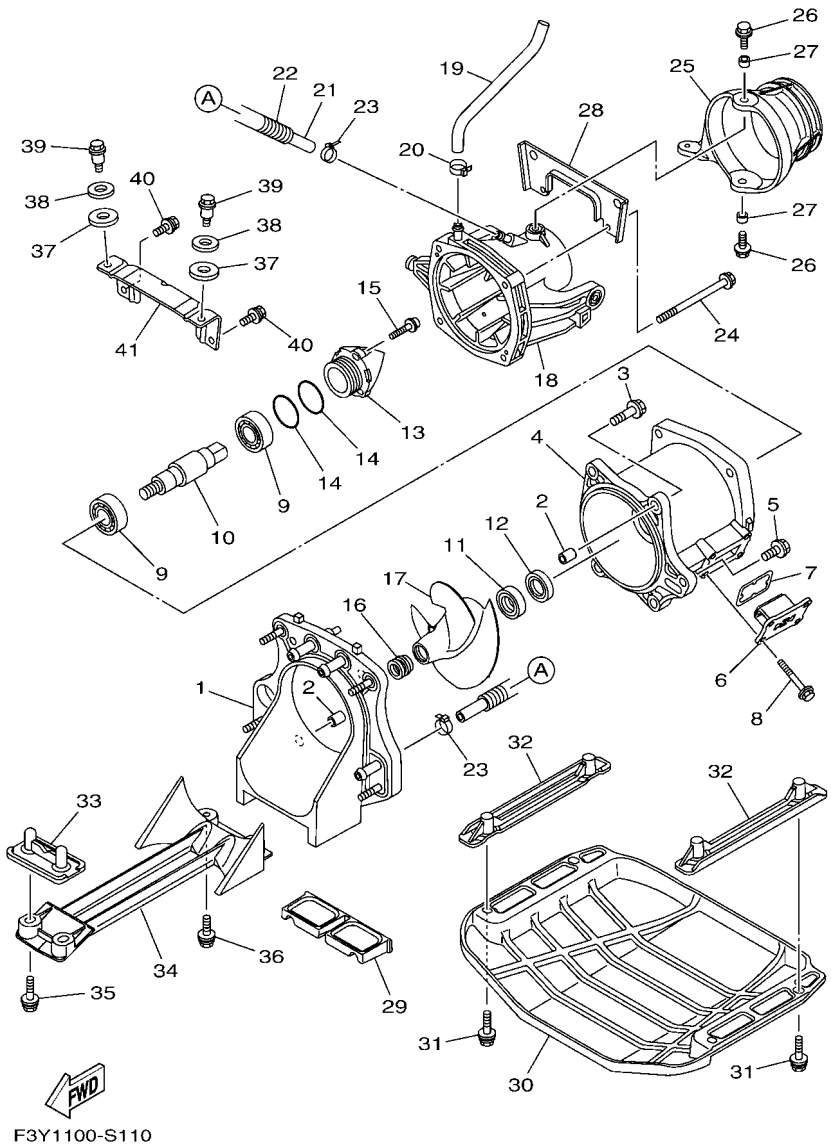

F3Y1100-S110

FIG. 11 JET UNIT 1

REF. NO.	PART NO.	DESCRIPTION	F3YR					REMARKS
1	6GA–G5831–00	PLATE, TRANSOM	1					
2	99590–14016	PIN, DOWEL	2					
3	90119–10067	BOLT, WITH WASHER	4					
4	6GA–R1312–01	HOUSING, IMPELLER	1					
5	90119–10808	BOLT, WITH WASHER	1					
6	6GA–G6882–00	FILTER	1					
7	6GA–G2414–00	O-RING	1					
8	90119–06889	BOLT, WITH WASHER	4					
9	93306–255X7	BEARING	2					
10	6GA–G5514–00	SHAFT, DRIVE 4	1					
11	93102–25M34	OIL SEAL	1					
12	93101–25M50	OIL SEAL	1					
13	6EX–R1326–10	CAP	1					
14	93210–44003	O-RING	2					
15	90110–06822	BOLT, HEXAGON SOCKET HEAD	3					
16	6DU–51319–00	CAP, IMPELLER	1					
17	6GA–R1321–00	IMPELLER	1					
18	6GA–R1318–00	NOZZLE	1					
19	6GA–U72M2–00	HOSE 1	1					
20	90601–118UF	BAND, HOSE 18	1					
21	90445–14025	HOSE (L220)	1					
22	90447–15005	TUBE (L180)	1					
23	90465–11829	CLAMP	2					
24	90119–08827	BOLT, WITH WASHER	4					
25	6BU–R1313–00	NOZZLE, DEFLECTOR	1					
26	90119–08840	BOLT, WITH WASHER	2					
27	90387–08M06	COLLAR	2					

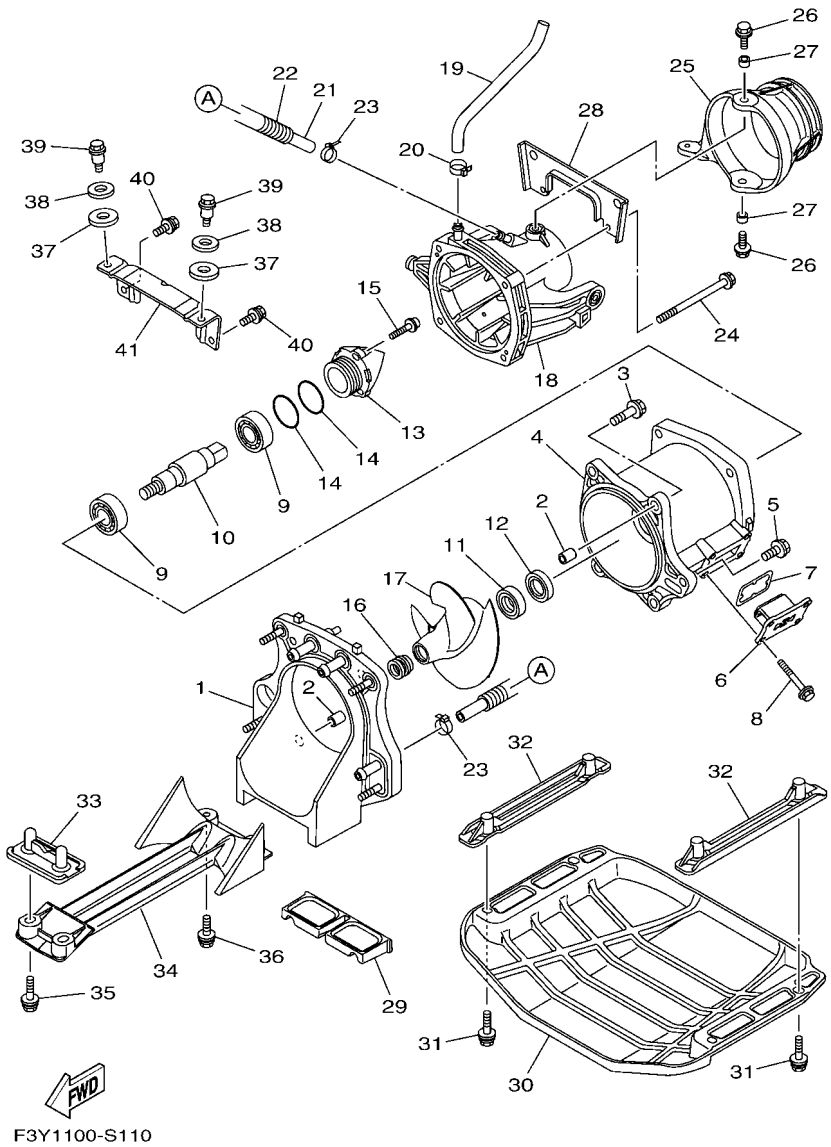

FIG. 11 JET UNIT 1

REF. NO.	PART NO.	DESCRIPTION	F3YR					REMARKS
28	6GA–R1959–00	BRACKET	1					
29	F3Y–U72C0–00	SPACER	1					
30	F3Y–U273B–10	PLATE 2	1					
31	F4L–U3222–00	BOLT	4					
32	F0V–U8572–10	BRACKET 2	2					
33	F2S–U8577–00	BRACKET, 3	1					
34	6GA–R1333–00	SCREEN, INTAKE	1					
35	F3Y–U1426–00	BOLT	2					
36	F3Y–U1426–00	BOLT	2					
37	90430–12002	GASKET	2					
38	92990–12200	WASHER, PLAIN	2					
39	90109–08041	BOLT	2					
40	90119–089U7	BOLT, WITH WASHER	2					
41	F3Y–U7557–00	BRACKET	1					

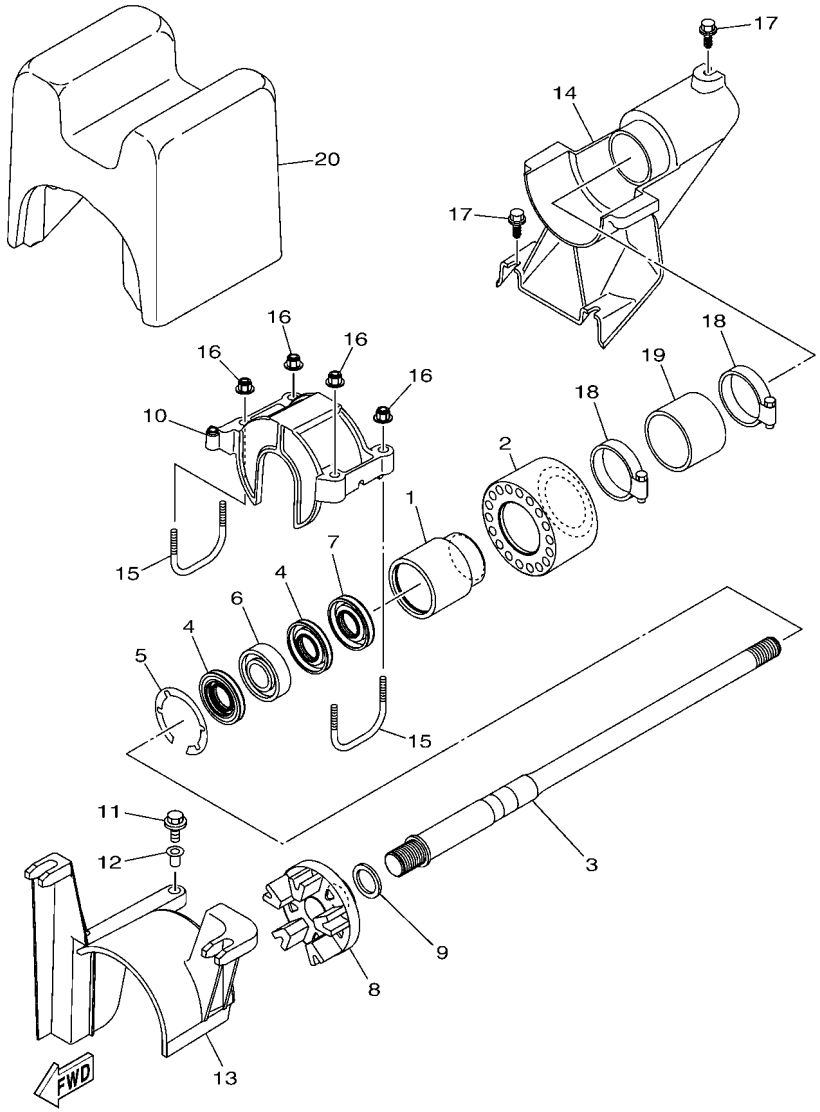

F3Y7100-T120

FIG. 12 JET UNIT 2

REF. NO.	PART NO.	DESCRIPTION	F3YR					REMARKS
1	6GA–G5332–00	HOUSING, BEARING	1					
2	6GA–G5235–00	DAMPER	1					
3	6GA–G5511–00	SHAFT, DRIVE	1					
4	93101–25M55	OIL SEAL	2					
5	99009–52500	CIRCLIP	1					
6	93306–205XG	BEARING	1					
7	93101–25M56	OIL SEAL	1					
8	6GA–G5593–00	FLANGE, COUPLING 1	1					
9	90201–24800	WASHER, PLATE	1					
10	F3Y–U2155–01	CAP	1					
11	90119–06891	BOLT, WITH WASHER	1					
12	90387–06289	COLLAR	1					
13	6GA–R1381–00	COVER	1					
14	F3Y–U883E–00	JOINT, PIPE	1					
15	F3Y–U3746–00	BOLT, LOCK	2					
16	F2N–U142L–00	NUT, LOCK	4					
17	90109–06832	BOLT	3					
18	90601–155U4	BAND, HOSE 55	2					
19	F3Y–U883B–00	PIPE 1	1					
20	F3Y–U892D–00	FLOTATION, STERN RH	1					

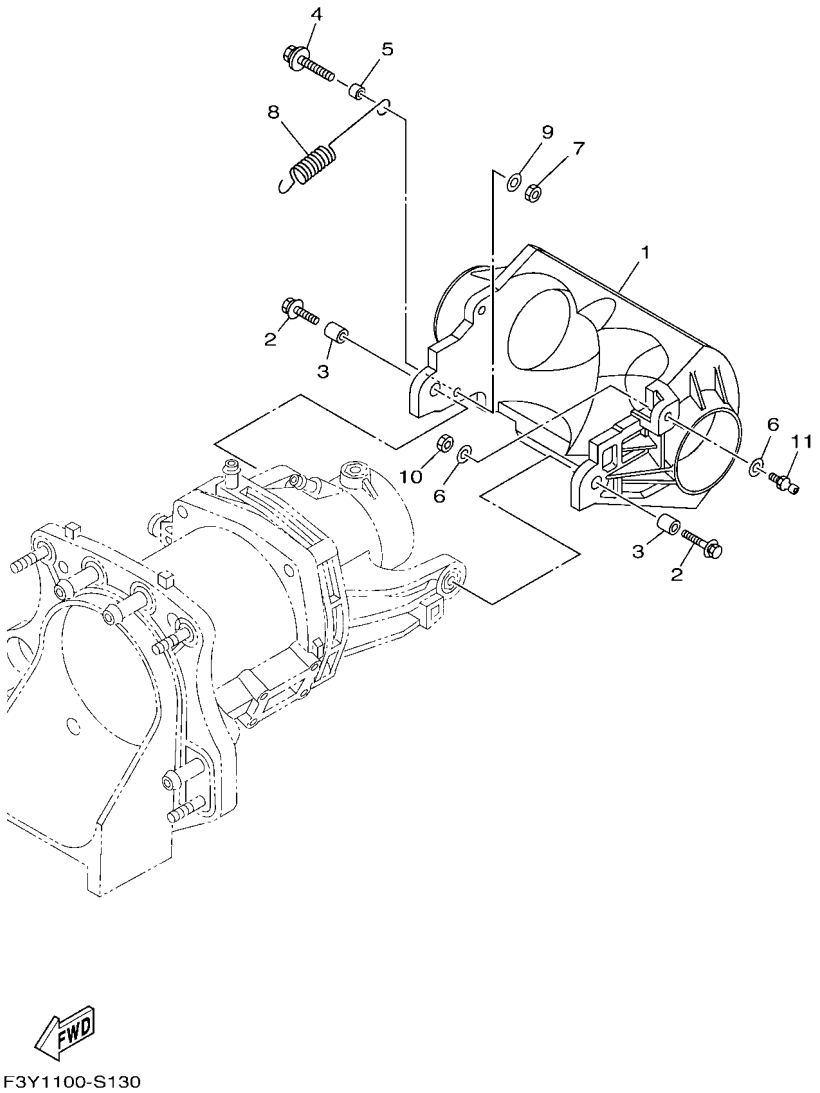

FIG. 13 JET UNIT 3

REF. NO.	PART NO.	DESCRIPTION	F3YR					REMARKS
1	6GA–R1314–00	GATE, REVERSE	1					
2	90119–08840	BOLT, WITH WASHER	2					
3	90387–08M30	COLLAR	2					
4	90119–069UX	BOLT, WITH WASHER	1					
5	90387–06319	COLLAR	1					
6	90201–06801	WASHER, PLATE	2					
7	95380–06600	NUT, HEXAGON	1					
8	6GA–R2358–00	SPRING, RETAINER	1					
9	90201–06801	WASHER, PLATE	1					
10	95380–06600	NUT, HEXAGON	1					
11	6GA–U1461–10	STUD, JOINT BALL	1					

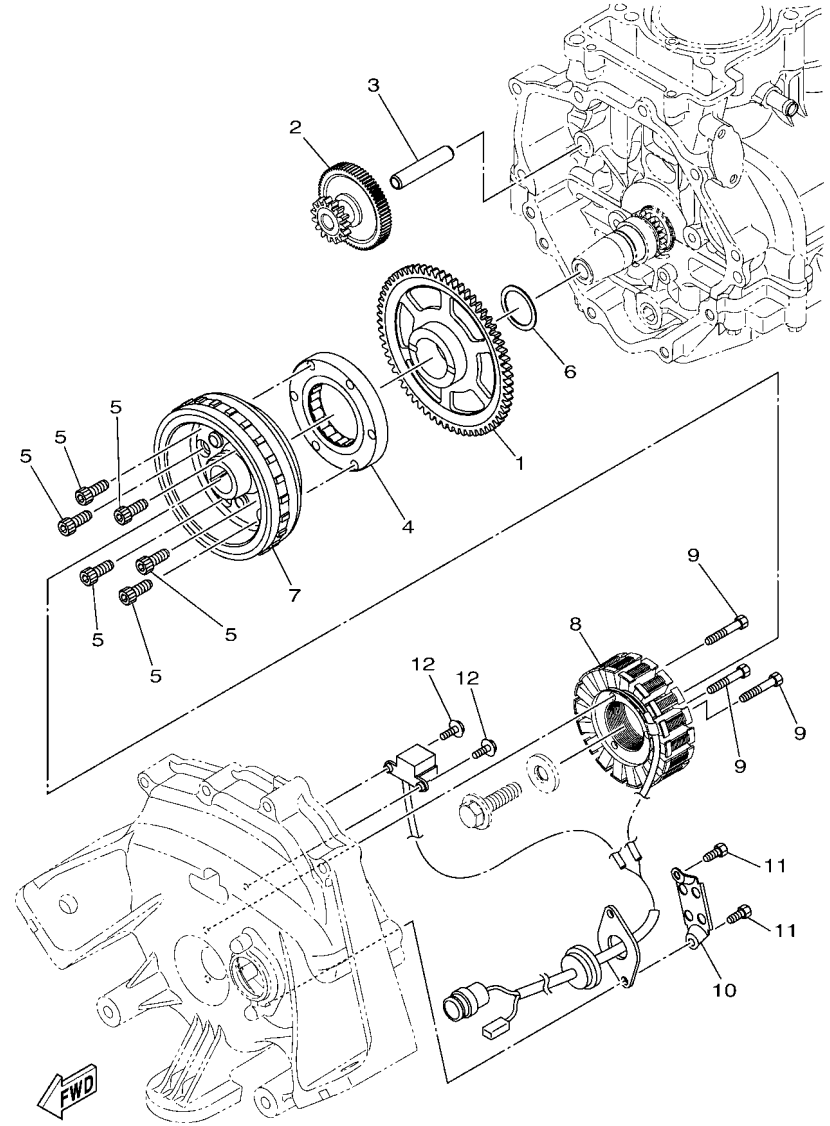

F4G1100-R140

FIG. 14 GENERATOR

REF. NO.	PART NO.	DESCRIPTION	F3YR					REMARKS
1	8FA–15515–00	GEAR 3	1					
2	2HC–15512–00	GEAR, IDLER 1	1					
3	8ES–15521–00	SHAFT 1	1					
4	6EY–15590–00	STARTER ONE-WAY ASSY	1					
5	90110–08212	BOLT, HEXAGON SOCKET HEAD	6					
6	90201–30013	WASHER, PLATE	1					
7	6EY–81450–00	ROTOR ASSY	1					
8	6EY–81410–00	STATOR ASSY	1					
9	91317–06035	BOLT,HEX.SOCKET HEAD	3					
10	60E–81328–00	CLAMP	1					
11	91317–06014	BOLT,HEX.SOCKET HEAD	2					
12	97513–05514	BOLT, WITH WASHER	2					

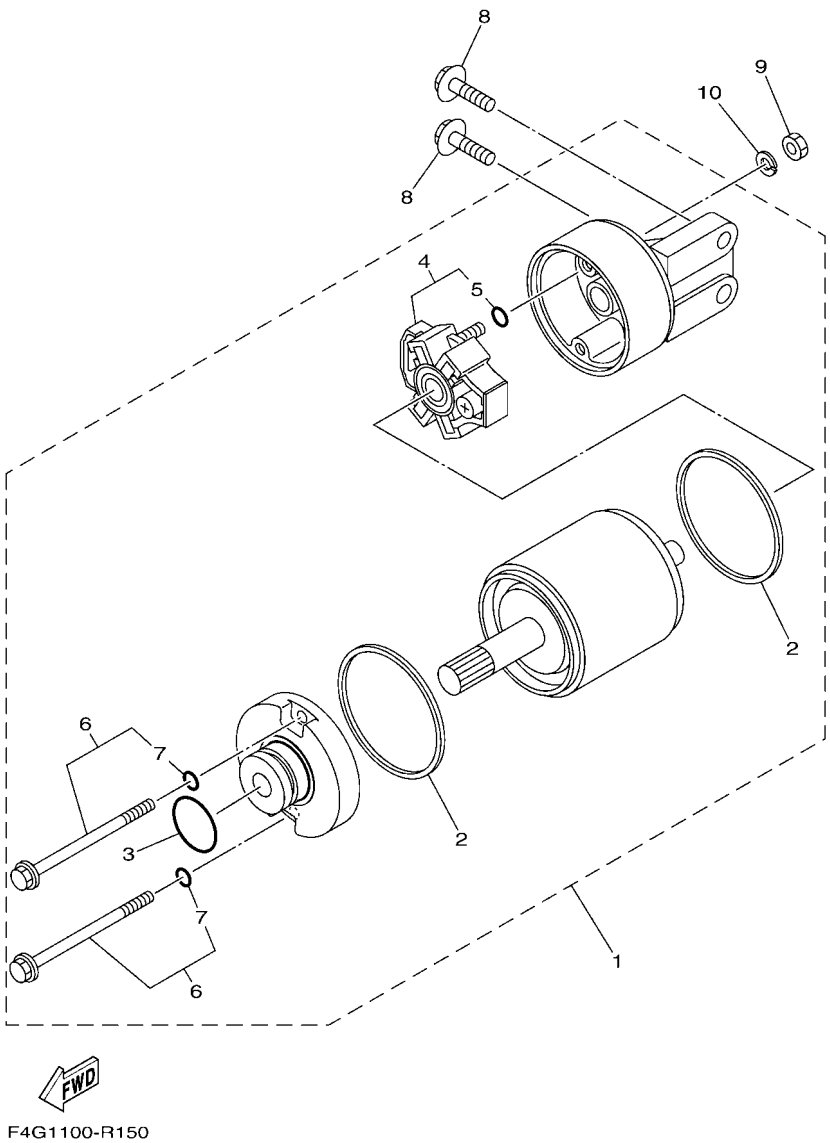

FIG. 15 STARTING MOTOR

REF. NO.	PART NO.	DESCRIPTION	F3YR					REMARKS
1	6EY–81800–00	STARTING MOTOR ASSY	1					
2	11H–81844–00	.GASKET	2					
3	1FK–81847–00	.O-RING	1					
4	6EY–81840–00	.BRUSH HOLDER ASSY	1					
5	3TB–81847–00	..O-RING	1					
6	6EY–81826–00	.BOLT	2					
7	3TB–81847–00	..O-RING	1					
8	97513–08530	BOLT, WITH WASHER	2					
9	95380–06700	NUT	1					
10	92990–06100	WASHER, SPRING	1					

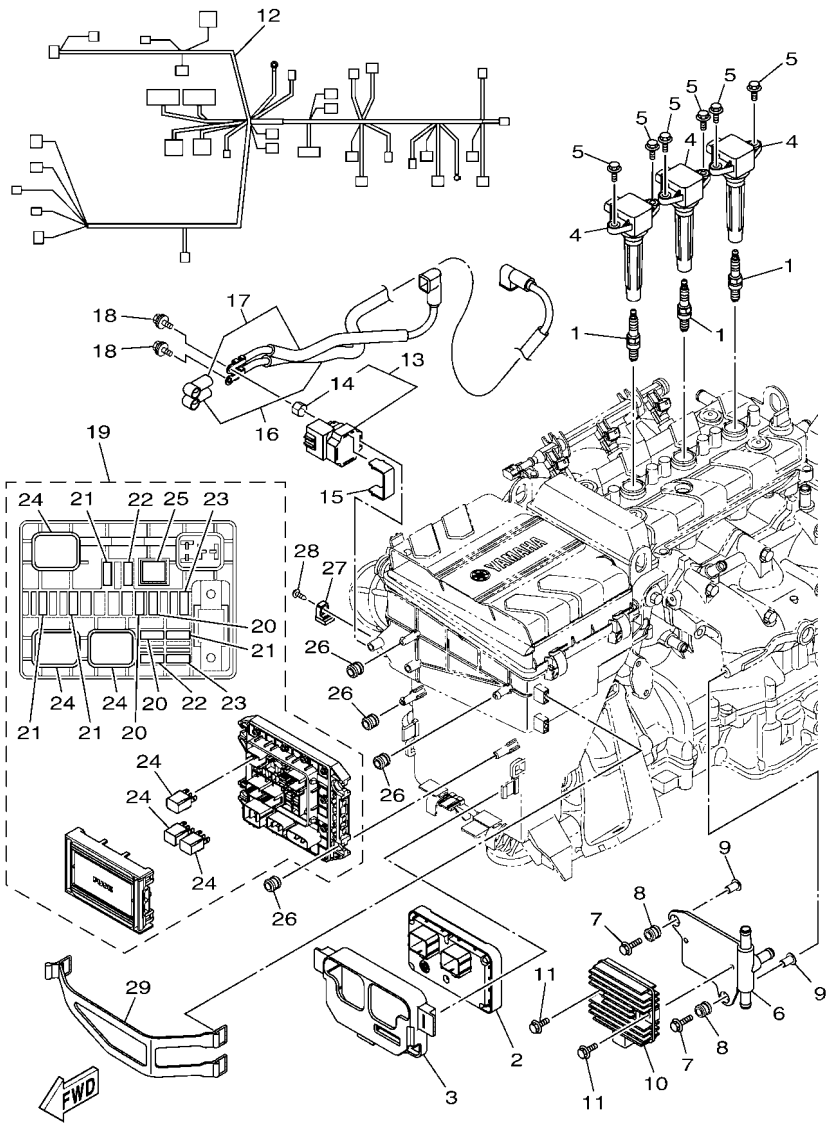

F3YR100-X160

FIG. 16 ELECTRICAL 1

REF. NO.	PART NO.	DESCRIPTION	F3YR					REMARKS
1	94702–00409	PLUG, SPARK (NGK CR9EB)	3					
2	6GA–8591A–31	ENGINE CONTROL UNIT ASSY	1					
3	6EY–8591S–00	GROMMET, ECU	1					
4	6EX–82310–02	IGNITION COIL ASSY	3					
5	95880–06016	BOLT, FLANGE	6					
6	6EY–81975–00	PLATE, RECTIFIER FITTING	1					
7	90119–06311	BOLT, WITH WASHER	2					
8	6A0–82317–01	DAMPER, IGNITION COIL	2					
9	90387–06119	COLLAR	2					
10	6D3–81960–01	RECTIFIER & REGULATOR ASSY	1					
11	95814–06020	BOLT, FLANGE	2					
12	6GA–8259L–50	WIRE HARNESS ASSY 1	1					
13	6EY–81940–09	STARTER RELAY ASSY	1					
14	6EY–82355–00	.GROMMET	1					
15	6EY–81953–00	STAY, RELAY	1					
16	6GA–82115–01	WIRE, PLUS LEAD	1					
17	6EY–82117–00	WIRE, LEAD	1					
18	97E95–06612	BOLT, HEXAGON W/W DEEP RECESS	2					
19	6EX–82170–12	FUSE BOX ASSY	1					
20	67F–82151–30	.FUSE (3A)	3					
21	67F–82151–40	.FUSE (10A)	4					
22	67F–82151–00	.FUSE (20A)	2					
23	67F–82151–10	.FUSE (30A)	2					
24	6EX–8195A–00	.RELAY ASSY	3					
25	6EX–2812A–00	.PULLER, FUSE	1					
26	6A0–82317–01	DAMPER, IGNITION COIL	4					
27	6AA–85542–00	BRACKET	1					

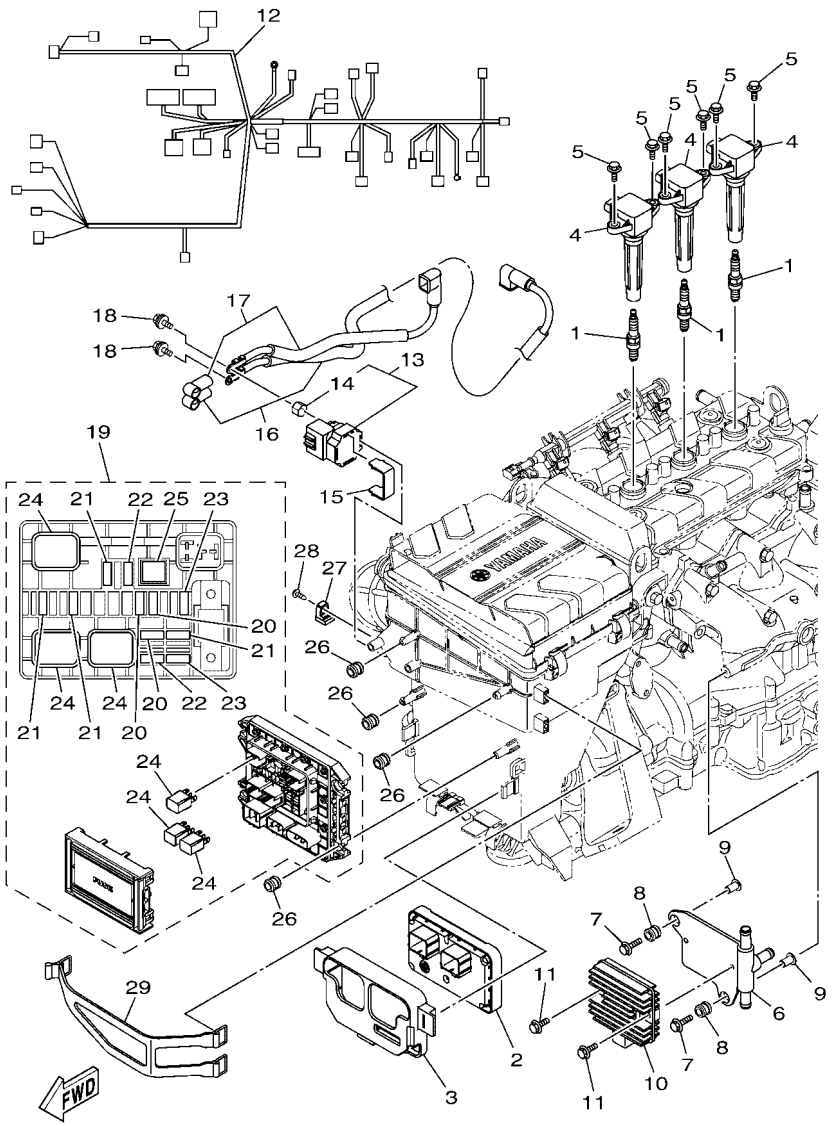

F3YR100-X160

FIG. 16 ELECTRICAL 1

REF. NO.	PART NO.	DESCRIPTION	F3YR					REMARKS
28	90160–05003	SCREW, ROUND TAPPING	1					
29	6EY–82593–01	BAND	1					

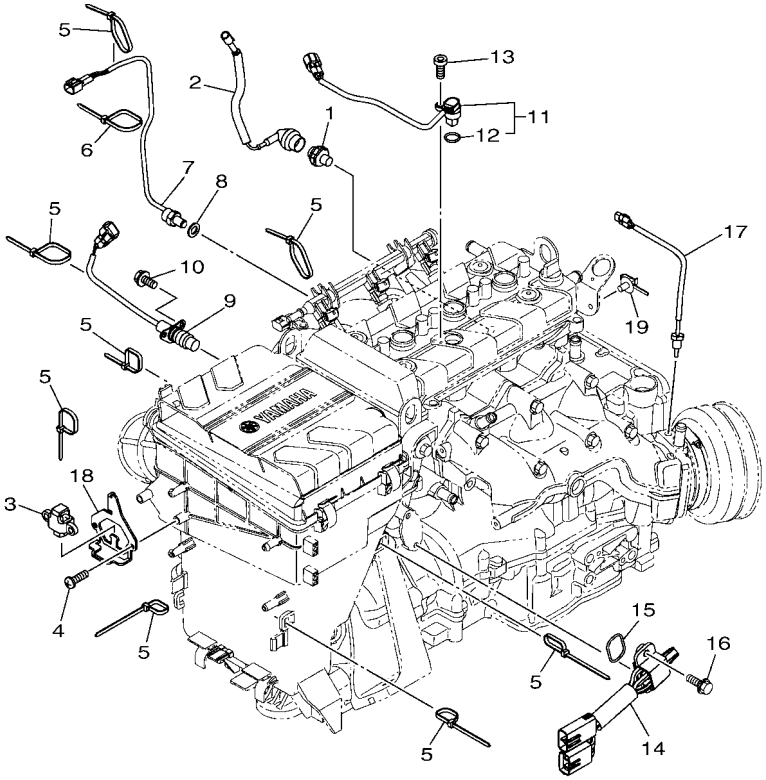

F3YD100-U170

FIG. 17 ELECTRICAL 2

REF. NO.	PART NO.	DESCRIPTION	F3YR					REMARKS
1	68V–82504–00	OIL PRESSURE SWITCH ASSY	1					
2	60E–81315–01	LEAD WIRE ASSY	1					
3	6ET–82576–00	SENSOR, LEAN ANGLE	1					
4	97780–60520	SCREW, TAPPING	2					
5	90464–35132	CLAMP	8					
6	90465–13M39	CLAMP	1					
7	61A–85790–01	THERMOSENSOR ASSY	1					
8	92990–10600	WASHER, PLATE	1					
9	6CR–82560–00	THERMO SWITCH ASSY	1					
10	97E95–06520	BOLT, HEXAGON W/W DEEP RECESS	2					
11	2S3–85896–02	SENSOR, CAM POSITION	1					
12	4D9–81168–00	.O-RING	1					
13	91380–06016	BOLT	1					
14	6CS–8273J–10	EARTH PLATE COMP.	1					
15	93210–32172	O-RING	1					
16	90119–06MA3	BOLT, WITH WASHER	2					
17	6DE–85790–00	THERMOSENSOR ASSY	1					
18	6EY–83618–10	PLATE	1					
19	90464–20005	CLAMP	1					

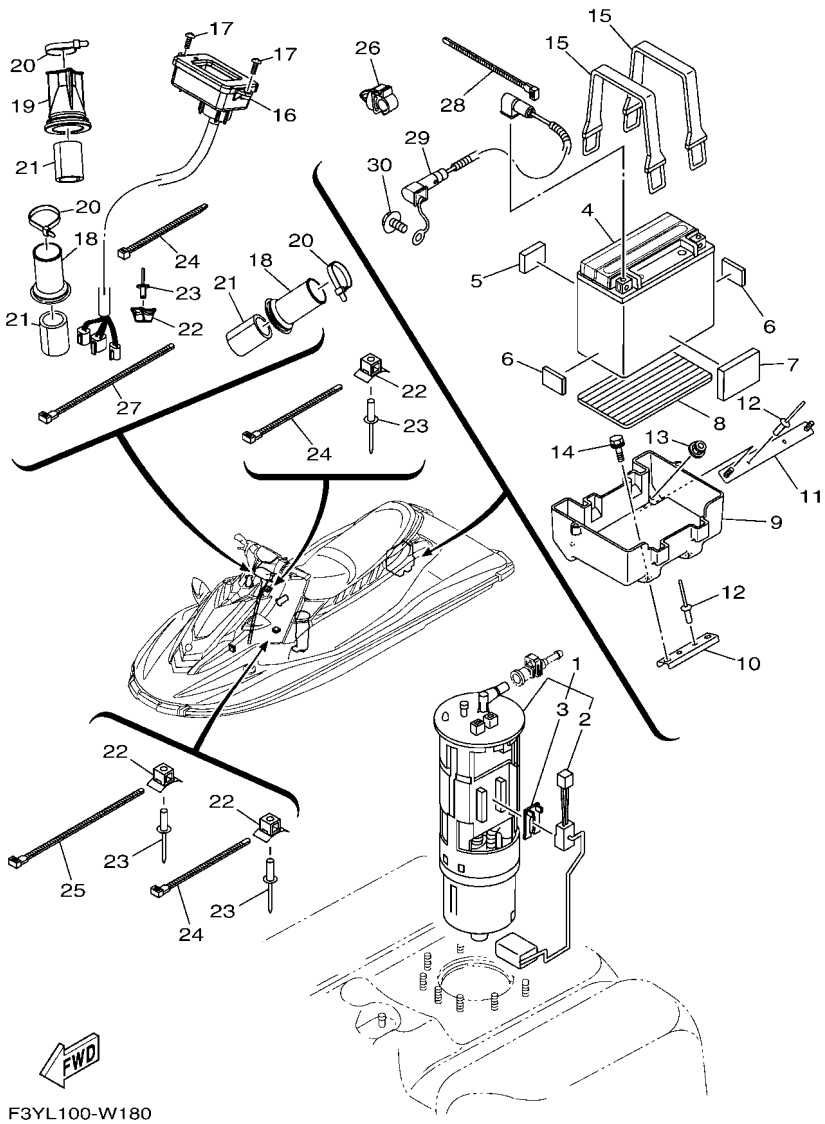

FIG. 18 ELECTRICAL 3

REF. NO.	PART NO.	DESCRIPTION	F3YR					REMARKS
1	6S5–13907–04	FUEL PUMP COMP.	1					
2	6S5–682E0–00	.FUEL SENDER ASSY	1					
3	60E–82556–00	.DAMPER, STOPPER	1					
4	5FU–H2100–20	BATTERY ASSY (YUASA YTX20L-BS)	1					
5	F2C–U1743–00	PACKING	1					
6	EU0–U8221–30	PAD, BATTERY 2	2					
7	F1W–U759C–01	MAT 2	1					
8	F1S–U8221–00	PAD, BATTERY	1					
9	F2S–U8211–00	CASE, BATTERY	1					
10	F2S–U8592–00	PLATE, BASE 2	1					
11	F2S–U8593–00	PLATE, BASE 3	1					
12	90267–489U1	RIVET,BLIND	4					
13	F2N–U142L–00	NUT, LOCK	2					
14	90119–06832	BOLT, WITH WASHER	2					
15	F4P–U821D–00	BAND, BATTERY 1	2					
16	F4L–U820A–00	METER ASSY	1					
17	F2S–U7823–01	SCREW	2					
18	GU2–6822E–01	GROMMET	2					
19	F3J–U822E–00	GROMMET	1					
20	90464–32801	CLAMP	3					
21	GJ1–U7578–21	PACKING, HOSE 2	3					
22	F1W–U828M–00	BASE, CLAMP	6					
23	90267–48806	RIVET, BLIND	6					
24	90464–32801	CLAMP	4					
25	90601–200U2	BAND	2					
26	90464–10008	CLAMP	1					
27	90601–200U2	BAND	1					

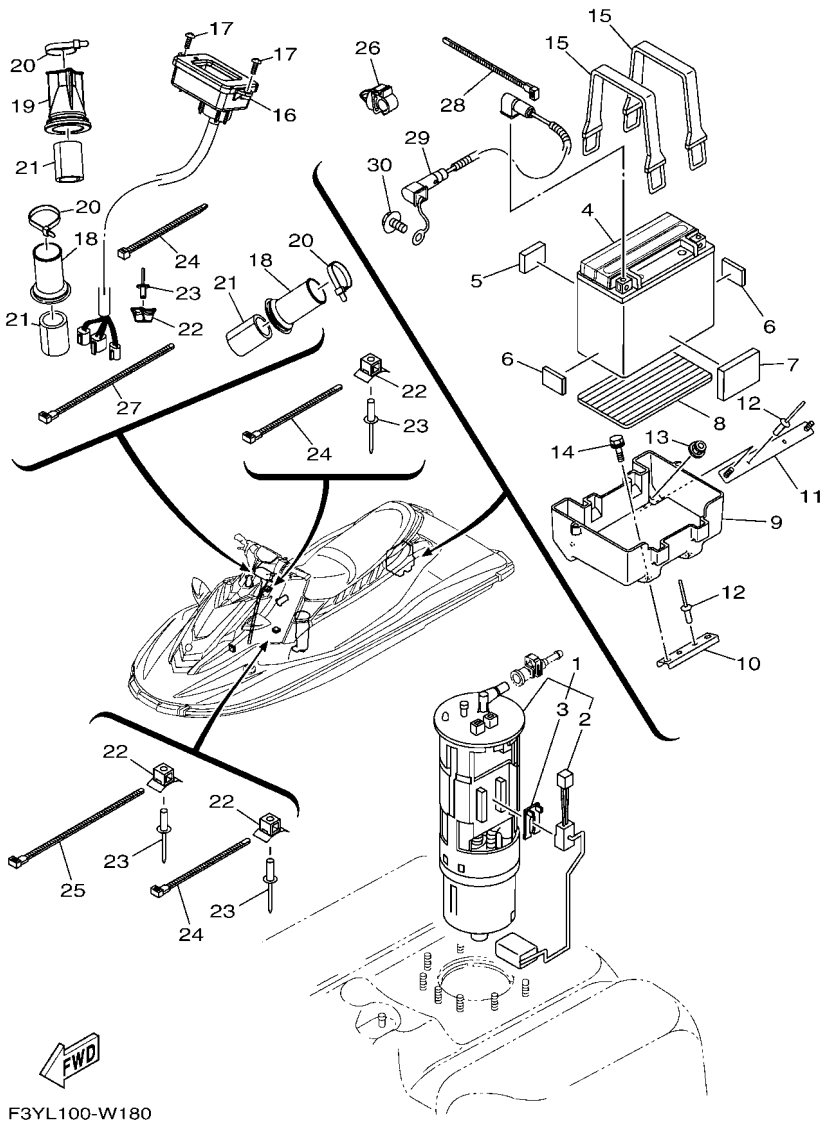

FIG. 18 ELECTRICAL 3

REF. NO.	PART NO.	DESCRIPTION	F3YR					REMARKS
28	90464–32801	CLAMP	1					
29	6GA–82116–00	WIRE, MINUS LEAD	1					
30	97513–08514	BOLT, WITH WASHER	1					

FIG. 19 ENGINE MOUNT

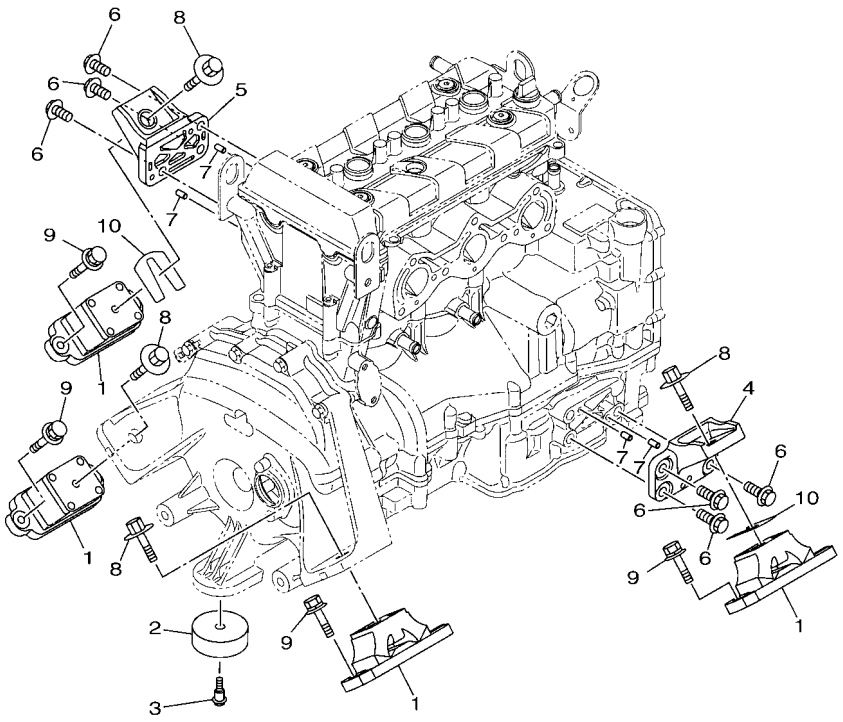

F3YK100-W190

REF. NO.	PART NO.	DESCRIPTION	F3YR					REMARKS
1	6GA–44517–00	MOUNT RUBBER	4					
2	6EY–44574–00	STOPPER, LOWER MOUNT RUBBER	1					
3	90109–06M92	BOLT	1					
4	6EY–41661–10	BRACKET 1	1					
5	6EY–41662–00	BRACKET 2	1					
6	90105–10M49	BOLT, FLANGE	6					
7	93606–12019	PIN, DOWEL	4					
8	90119–08859	BOLT, WITH WASHER	4					
9	90119–08823	BOLT, WITH WASHER	8					
10	EU0–U7354–00–01	SHIM (T=0.1)	4					UN
	EU0–U7354–00–03	SHIM (T=0.3)	4					UN
	EU0–U7354–00–05	SHIM (T=0.5)	4					UN
	EU0–U7354–00–10	SHIM (T=1.0)	4					UN
	EU0–U7354–00–20	SHIM (T=2.0)	4					UN

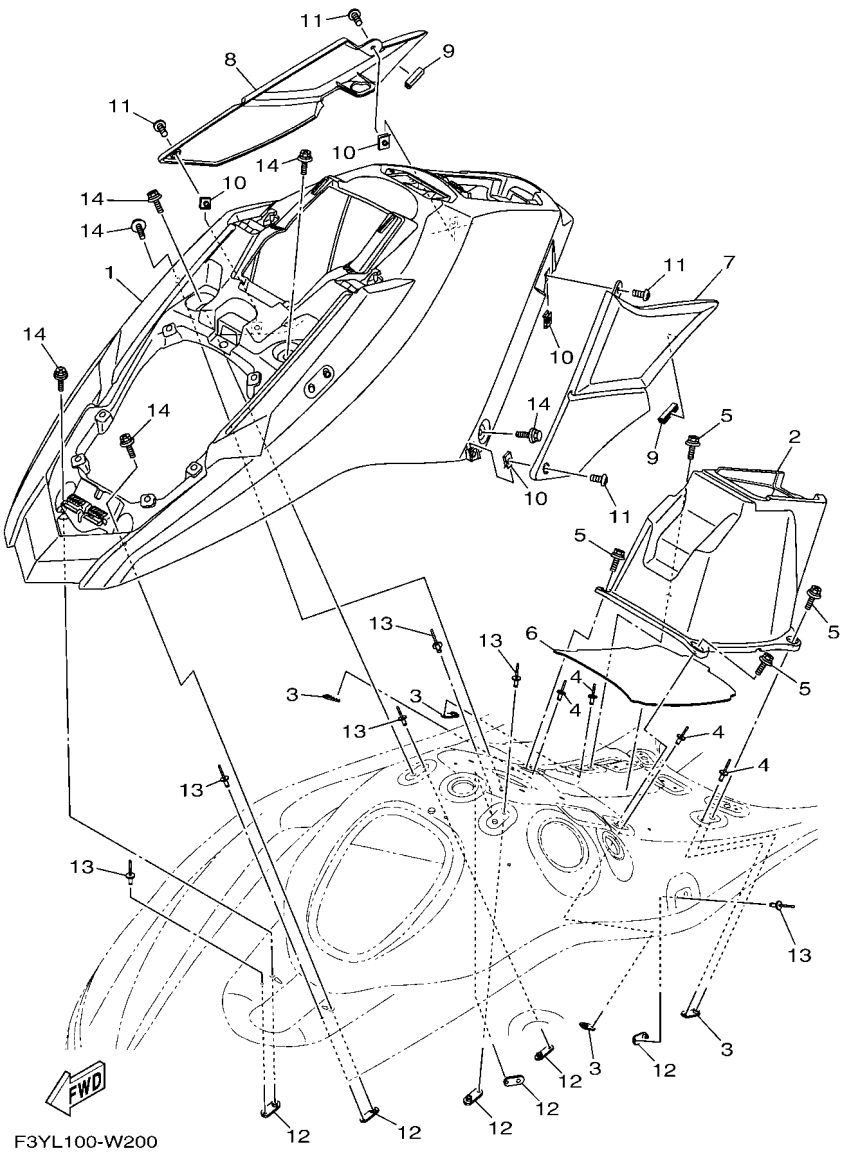

FIG. 20 ENGINE HATCH 1

REF. NO.	PART NO.	DESCRIPTION	F3YR					REMARKS
1	F3Y–U516N–00	COVER, ENGINE HATCH	1					FOR YELLOW
	F3Y–U516N–10	COVER, ENGINE HATCH	1					FOR WHITE
2	F3Y–U516P–00	BOX GLOVE	1					
3	F2X–U5175–00	PLATE, FIX	4					
4	90267–489U1	RIVET,BLIND	4					
5	90119–06882	BOLT, WITH WASHER	4					
6	F3Y–U759B–00	MAT 1	1					
7	F3Y–U353B–E0	PAD, KNEE	1					
8	F3Y–U353B–F0	PAD, KNEE	1					
9	F3Y–U828H–30	TRIM, 1	2					
10	90183–06902	NUT, SPRING	4					
11	90111–06873	BOLT,HEX. SOCKET BUTTON	4					
12	F2X–U5175–00	PLATE, FIX	6					
13	90267–489U1	RIVET,BLIND	6					
14	90119–06820	BOLT, WITH WASHER	6					

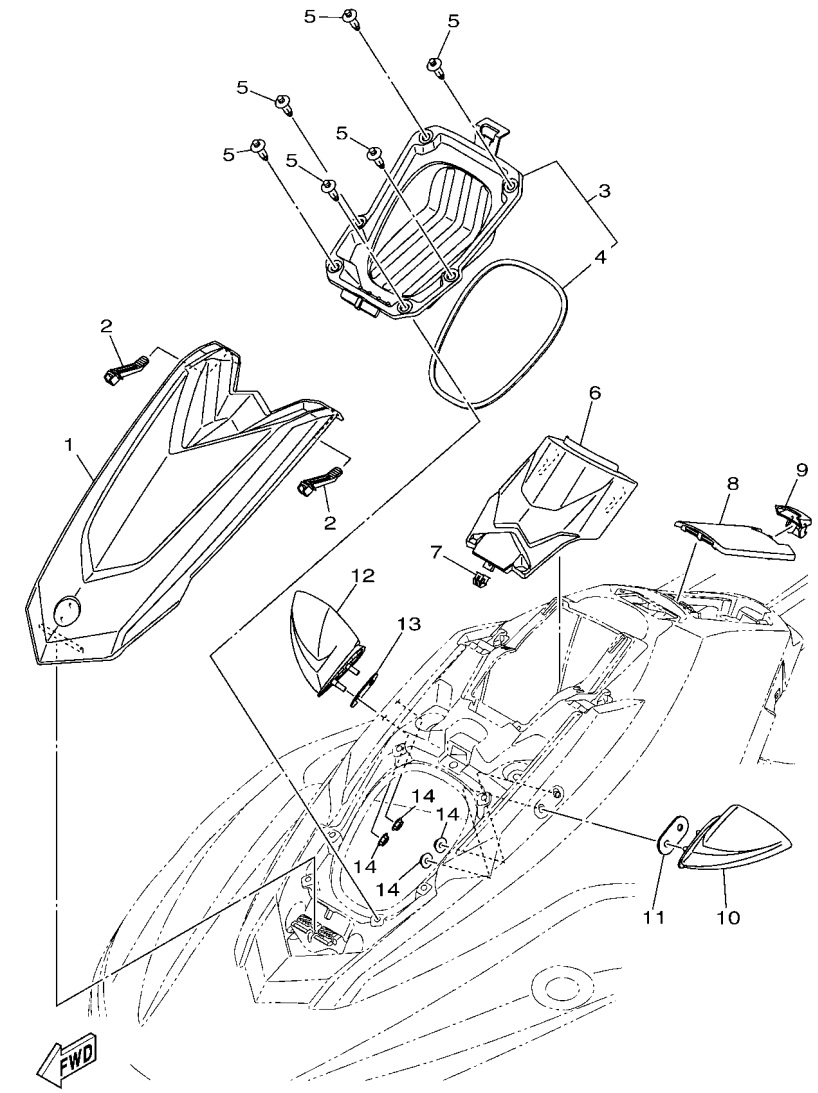

F3Y1100-S210

FIG. 21 ENGINE HATCH 2

REF. NO.	PART NO.	DESCRIPTION	F3YR					REMARKS
1	F3Y–U517B–00–P5	LID, ENGINE ROOM (VLGS6)	1					FOR YELLOW
	F3Y–U517B–00–P3	LID, ENGINE ROOM (VLGS3)	1					FOR WHITE
2	F3Y–U264L–00	LOCK 1	2					
3	F3Y–U475A–00	BOWLOCKER ASSY	1					
4	F3Y–U2663–00	.PACKING 1	1					
5	90269–08801	RIVET	6					
6	F3Y–U513M–00	COVER, FRONT	1					
7	F3Y–U153K–00	CLIP	1					
8	F3Y–U517H–00	LID HATCH	1					
9	F3Y–U2875–00	LOCK	1					
10	F3Y–U596B–10	MIRROR LH	1					
11	F3Y–U4953–00	PLATE A	1					
12	F3Y–U596C–10	MIRROR RH	1					
13	F3Y–U4953–00	PLATE A	1					
14	9572R–08300	NUT, FLANGE	4					

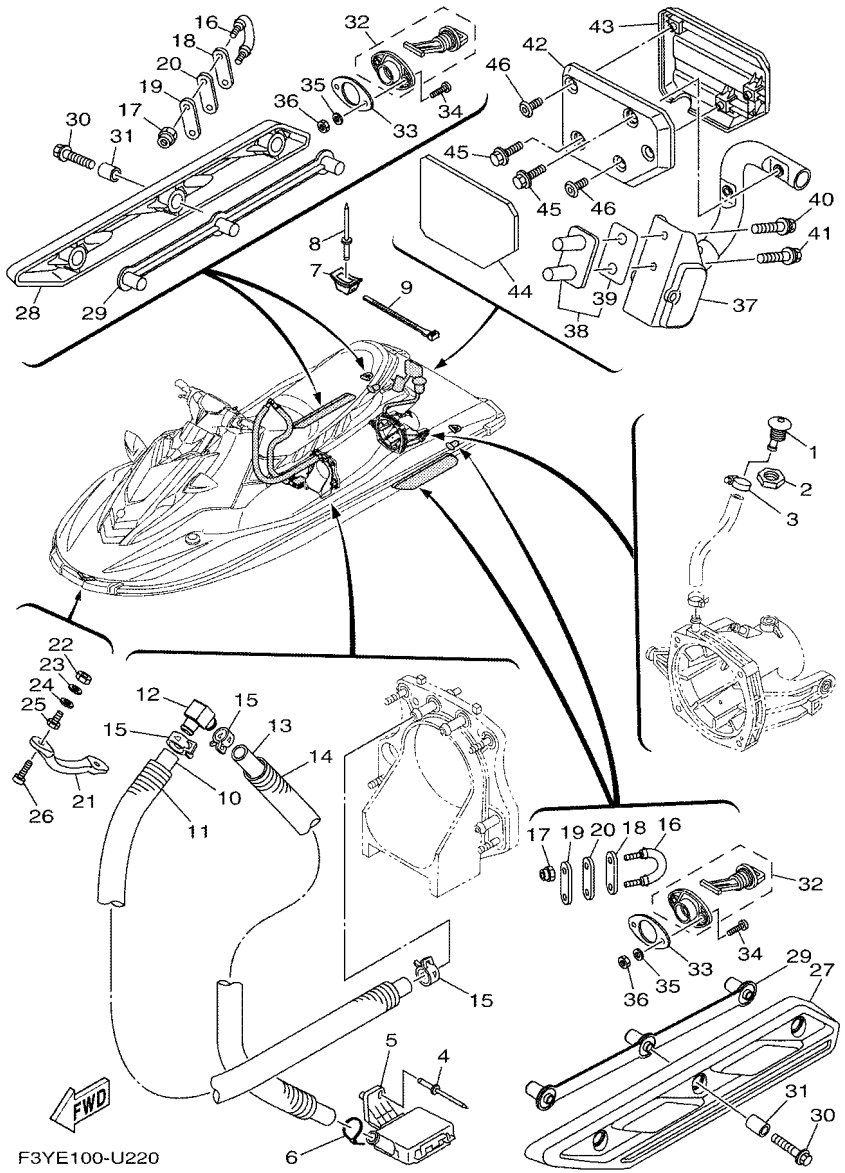

FIG. 22 HULL & DECK

REF. NO.	PART NO.	DESCRIPTION	F3YR					REMARKS
1	F1W–U269B–00	SPOUT	1					
2	EU0–61652–00	NUT	1					
3	90601–118UF	BAND, HOSE 18	1					
4	F1B–U761D–02	STRAINER, BILGE	1					
5	90267–489U8	RIVET, BLIND	1					
6	90465–11829	CLAMP	1					
7	F1W–U828M–00	BASE, CLAMP	1					
8	90267–48806	RIVET, BLIND	1					
9	90601–200U2	BAND	1					
10	6GA–U771G–00	HOSE 2	1					
11	6GA–U773E–00	TUBE,2	1					
12	68N–5112T–00	JOINT, HOSE	1					
13	6GA–U784C–00	HOSE	1					
14	6GA–U773D–00	TUBE	1					
15	90467–180A5	CLIP	3					
16	F2N–U1628–02	STERN EYE	2					
17	9572R–08300	NUT, FLANGE	4					
18	GP7–U4953–10	PLATE A	2					
19	GP7–U4953–10	PLATE A	2					
20	F1B–U1653–02	PACKING	2					
21	F1K–61624–00	BOW EYE 1	1					
22	99780–12600	NUT.HEX.(COARS)	2					
23	92990–12200	WASHER, PLAIN	2					
24	F0X–61637–00	WASHER	2					
25	F0X–61652–01	NUT	2					
26	90110–06040	BOLT, HEXAGON SOCKET HEAD	2					
27	F3Y–U883N–00	STABILIZER LH	1					

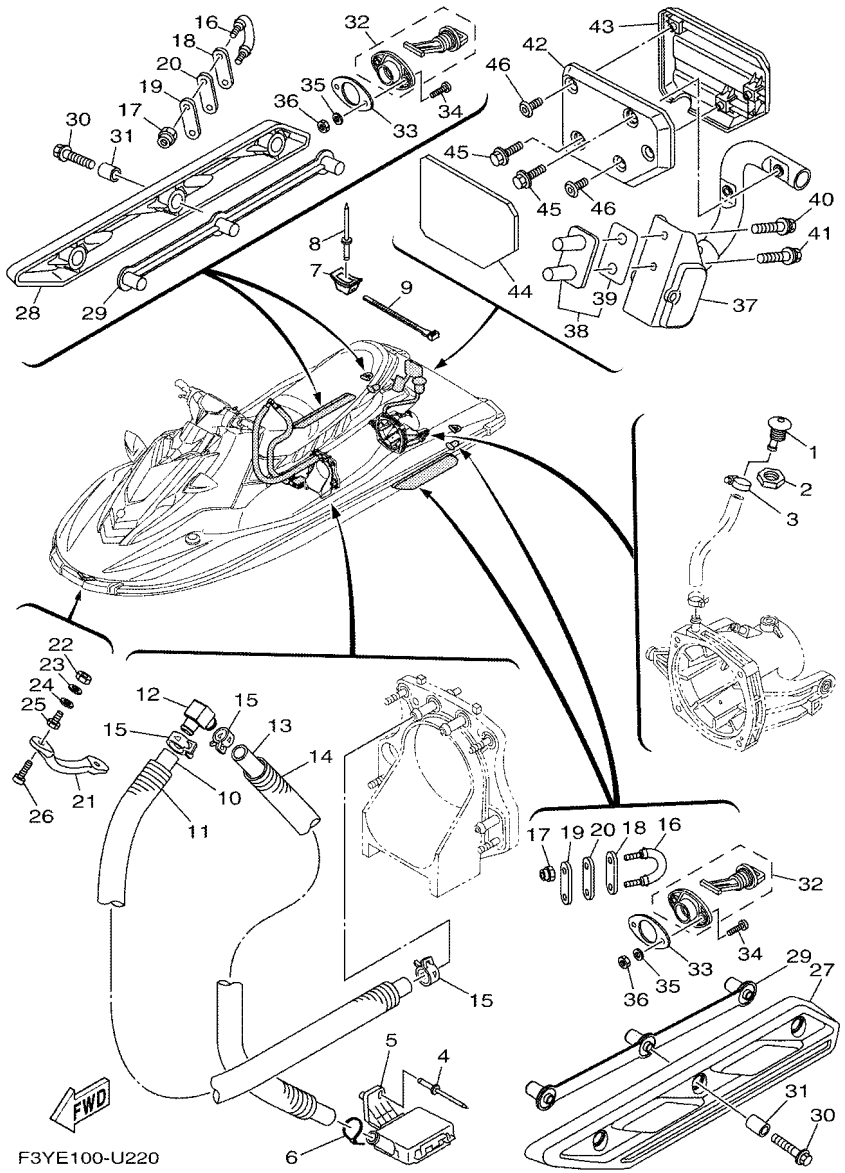

FIG. 22 HULL & DECK

REF. NO.	PART NO.	DESCRIPTION	F3YR					REMARKS
28	F3Y–U883P–00	STABILIZER RH	1					
29	F3Y–U883T–00	BRACKET,STABILIZER	2					
30	90105–08860	BOLT, FLANGE	6					
31	F2N–U8169–00	SPACER	6					
32	F1S–U2280–02	DRAIN PLUG ASSY.	2					
33	F1S–U2285–00	PACKING, DRAIN	2					
34	9788R–05025	SCREW, PAN HEAD	4					
35	9299R–05200	WASHER	4					
36	9572R–05300	NUT, FLANGE	4					
37	F3Y–U278A–02	LADDER, STEP ASSY	1					
38	F2S–U278F–00	BRACKET, LADDER LH	1					
39	F2S–U278H–00	.PACKING, BRKT. 1	1					
40	90119–08861	BOLT, WITH WASHER	1					
41	90119–08861	BOLT, WITH WASHER	1					
42	F3Y–U882F–00	STEP	1					
43	F3Y–U884R–00	PLATE, STEP 1	1					
44	F3Y–U4994–00	COVER STEP 1	1					
45	90119–06891	BOLT, WITH WASHER	2					
46	F2S–U13C1–00	SCREW	3					

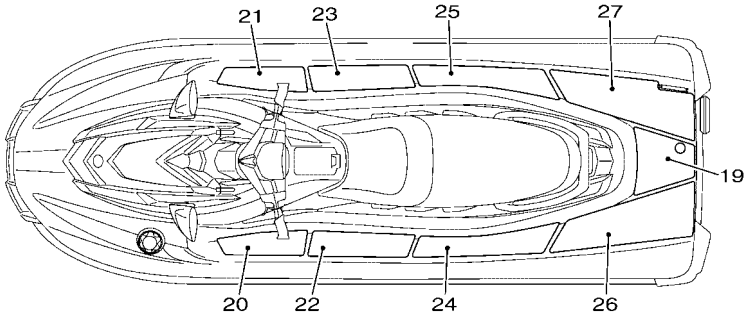

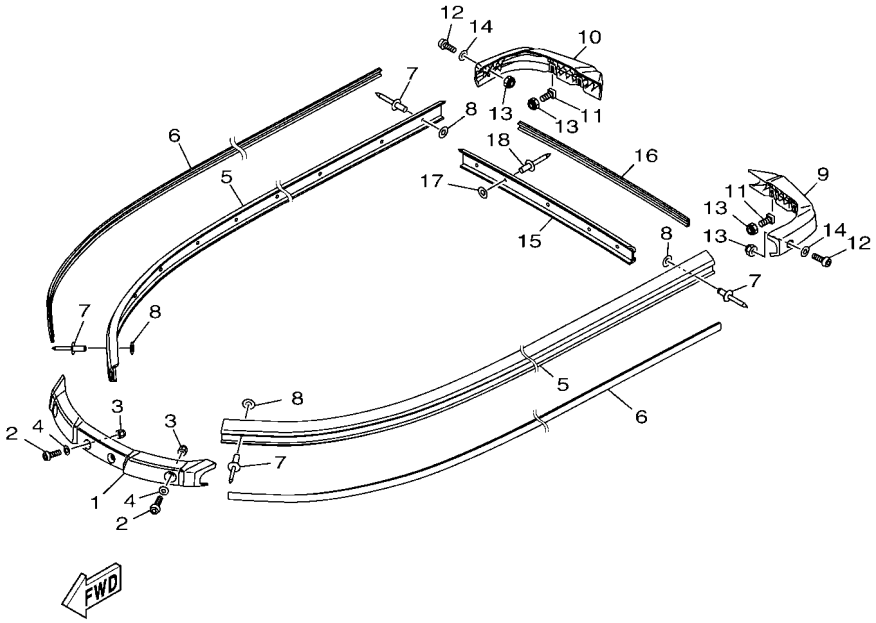

F3Y1100-S230

FIG. 23 GUNWALE & MAT

REF. NO.	PART NO.	DESCRIPTION	F3YR					REMARKS
1	F3Y–U2511–00	GUNWALE, BOW	1					BLACK
2	90111–06803	BOLT,HEX. SOCKET BUTTON	4					
3	F2N–U142L–00	NUT, LOCK	4					
4	F3Y–U1174–00	WASHER	4					
5	F3Y–U2512–03	GUNWALE, SIDE	2					BLACK
6	F3Y–U2519–82	INNER,GUNWALE	2					YELLOW FOR YELLOW
	F3Y–U2519–21	INNER,GUNWALE	2					GREEN FOR WHITE
7	90267–489U8	RIVET, BLIND	30					
8	9299R–05200	WASHER	30					
9	F3Y–U251D–00	GUNWALE, STERN 1	1					BLACK
10	F3Y–U251E–00	GUNWALE, STERN 2	1					BLACK
11	F1W–U491K–00	BOLT, SPECIAL	4					
12	90111–06803	BOLT,HEX. SOCKET BUTTON	2					
13	F2N–U142L–00	NUT, LOCK	6					
14	F3Y–U1174–00	WASHER	2					
15	F3Y–U252C–00	COVER, GUNWALE 1	1					BLACK
16	F3Y–U252D–81	COVER, GUNWALE 2	1					YELLOW FOR YELLOW
	F3Y–U252D–30	COVER, GUNWALE 2	1					GREEN FOR WHITE
17	9299R–05200	WASHER	5					
18	90267–489U8	RIVET, BLIND	5					
19	F3Y–U3581–30	MAT, UPPER	1					BLACK/GRAY
20	F3Y–U351H–30	MAT, STEP 1	1					BLACK/GRAY
21	F3Y–U351J–30	MAT, STEP 2	1					BLACK/GRAY
22	F3Y–U351K–30	MAT, STEP 3	1					BLACK/GRAY
23	F3Y–U351M–30	MAT, STEP 4	1					BLACK/GRAY
24	F3Y–U351N–30	MAT, STEP 5	1					BLACK/GRAY
25	F3Y–U351P–30	MAT, STEP 6	1					BLACK/GRAY

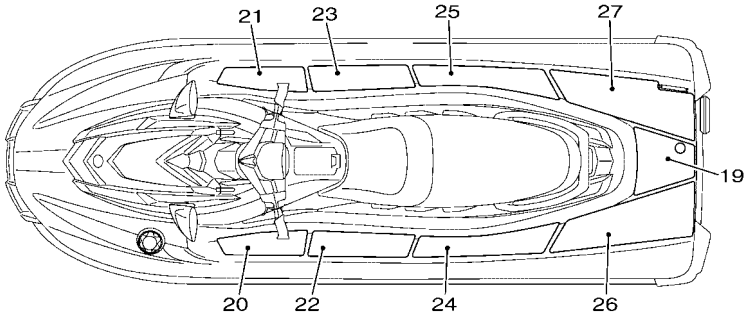

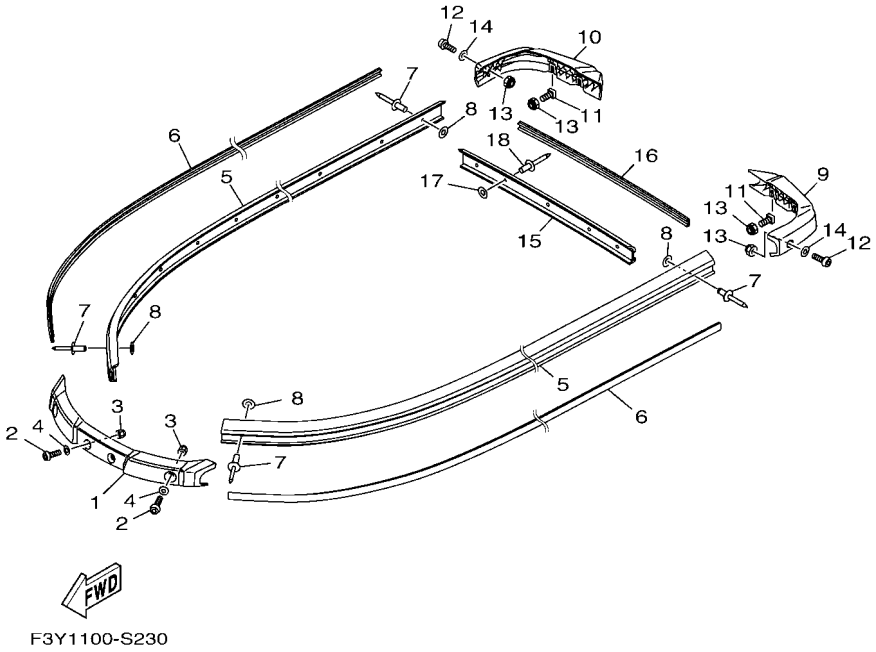

FIG. 23 GUNWALE & MAT

REF. NO.	PART NO.	DESCRIPTION	F3YR					REMARKS
26	F3Y–U351R–30	MAT, STEP 7	1					BLACK/GRAY
27	F3Y–U351S–30	MAT, STEP 8	1					BLACK/GRAY

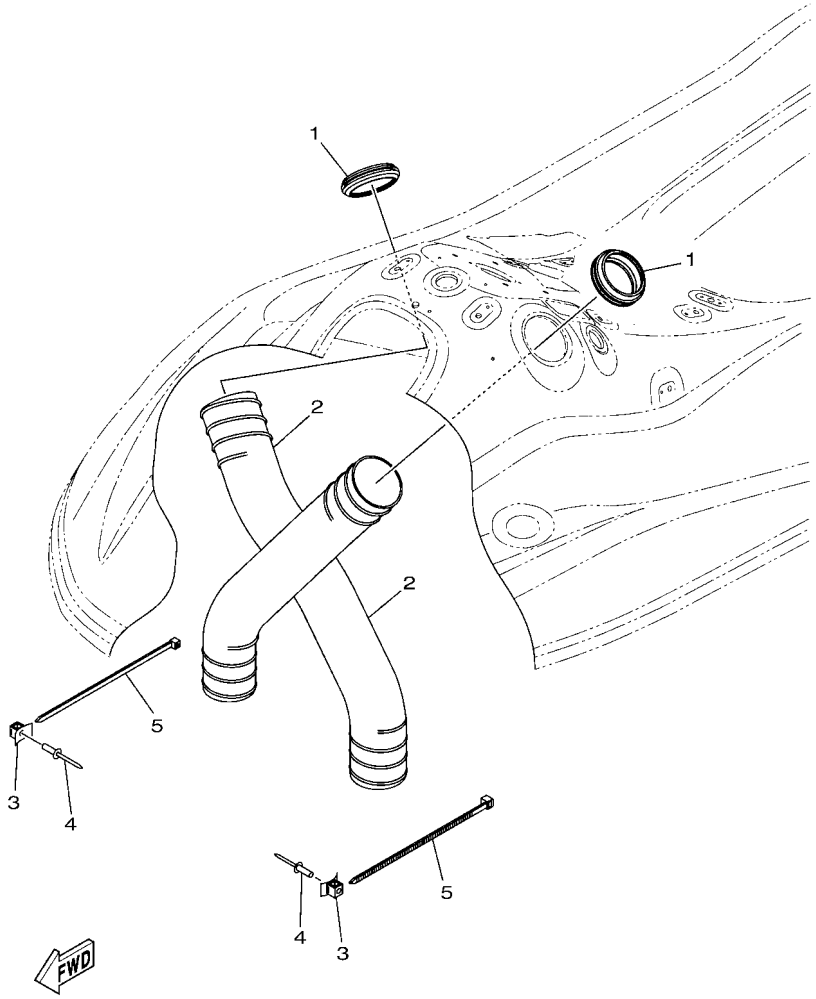

F3Y1100-S240

FIG. 24 VENTILATION

REF. NO.	PART NO.	DESCRIPTION	F3YR					REMARKS
1	F3Y–U2127–00	BASE, AIR INTAKE	2					
2	F3Y–U213G–01	HOSE, VENTILATOR 2	2					
3	F1W–U828M–00	BASE, CLAMP	2					
4	90267–48806	RIVET, BLIND	2					
5	90464–99804	CLAMP	2					

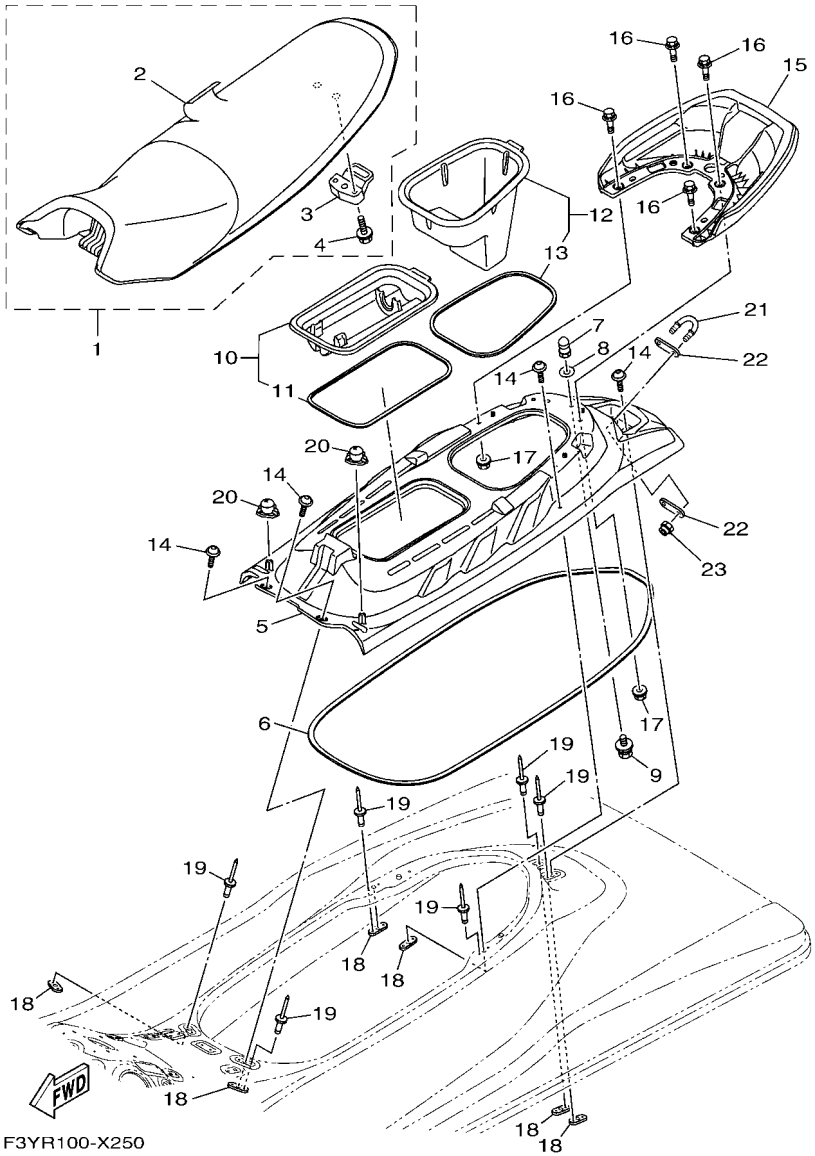

FIG. 25 SEAT & UNDER LOCKER

REF. NO.	PART NO.	DESCRIPTION	F3YR					REMARKS
1	F3Y–U371A–P0	DOUBLE SEAT ASSY	1					
2	F3Y–U371B–P0	.COVER, SEAT 1	1					
3	F1B–U3850–02	.SEAT LOCK ASSY	1					
4	90119–069UP	.BOLT, WITH WASHER	2					
5	F3Y–U3743–01	BASE, SEAT 2	1					FOR YELLOW
	F3Y–U3743–20	BASE, SEAT 2	1					FOR WHITE
6	F3Y–U266B–01	PACKING 3	1					
7	F1K–U3774–00	PIN	1					
8	90201–109U6	WASHER, PLATE	1					
9	90119–10804	BOLT, WITH WASHER	1					
10	F3Y–U592A–10	CASE ASSY 2	1					
11	F3Y–U266D–10	.PACKING 5	1					
12	F3Y–U591A–10	CASE ASSY 1	1					
13	F3Y–U266E–10	.PACKING,6	1					
14	F3Y–U491K–02	BOLT, SPECIAL	6					
15	F3Y–U271B–00	GRIP, HAND	1					
16	90119–08829	BOLT, WITH WASHER	4					
17	F3Y–U142L–00	NUT, LOCK	4					
18	F2C–U826C–00	BRACKET	6					
19	90267–489U1	RIVET,BLIND	12					
20	F3Y–U1338–00	GROMMET	2					
21	F2N–U1628–02	STERN EYE	1					
22	GP7–U4953–10	PLATE A	2					
23	9572R–08300	NUT, FLANGE	2					

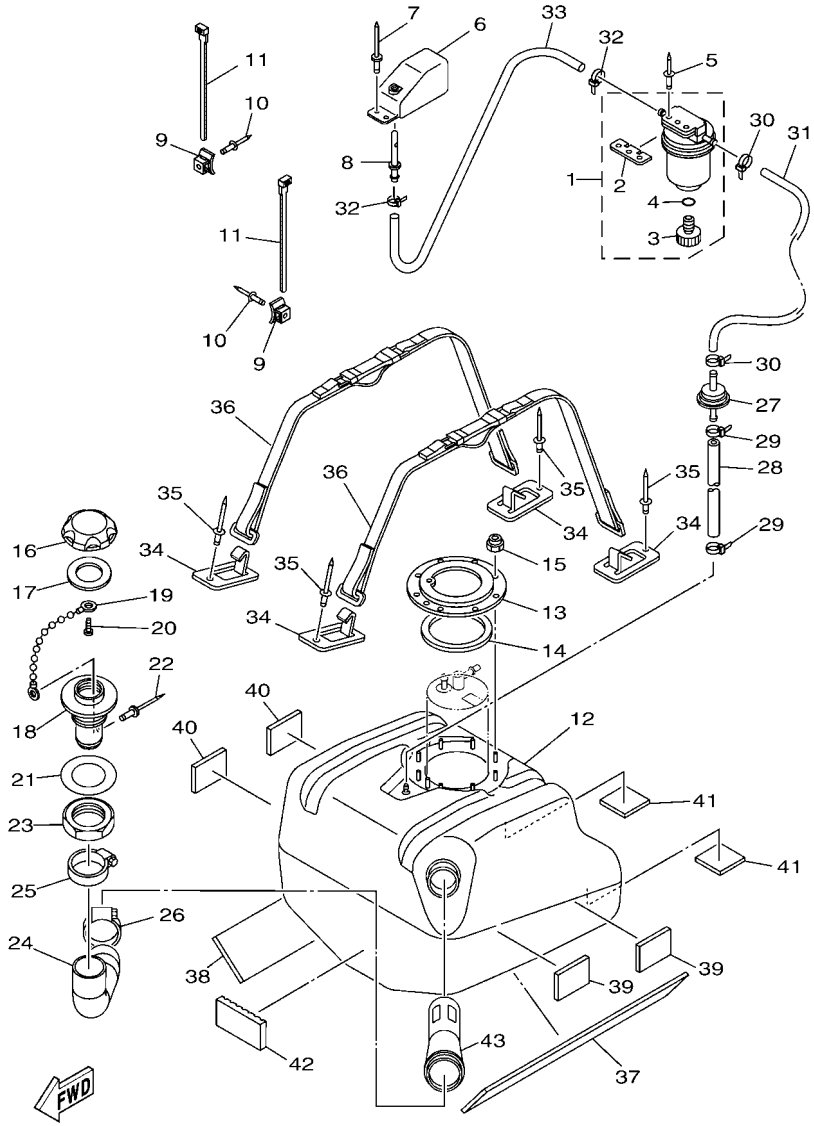

F3YD100-U260

FIG. 26 FUEL TANK

REF. NO.	PART NO.	DESCRIPTION	F3YR					REMARKS
1	F2F–6214A–00	FILTER, VENT ASSY	1					
2	EW2–62142–00	.PLATE, FILTER	1					
3	70R–24543–00	.PLUG, DRAIN	1					
4	70R–24489–00	.O-RING	1					
5	90267–489U2	RIVET, BLIND	2					
6	GP7–62159–02	SOCKET, VENTILATION	1					
7	90267–489U6	RIVET, BLIND	2					
8	F1G–62149–00	PIPE, VENTILATION	1					
9	F1W–U828M–00	BASE, CLAMP	2					
10	90267–48806	RIVET, BLIND	2					
11	90464–32801	CLAMP	2					
12	F3Y–U7711–02	TANK, FUEL	1					
13	F1B–U7773–00	RING	1					
14	F1B–67747–00	PACKING, SEAL	1					
15	9572R–06300	NUT, NYLON	9					
16	F2N–U7831–10	CAP, FUEL FILLER	1					BLACK
17	GP7–U7832–01	PACKING	1					
18	GP7–U7833–11	SOCKET	1					BLACK
19	GP7–U7835–00	CHAIN BALL	1					
20	90169–049U1	TAPPING SCREW	1					
21	GP7–U7834–00	PACKING FUEL FILLER	1					
22	90267–329UR	RIVET, BLIND	1					
23	GP7–U783F–00	NUT, FUEL FILLER	1					
24	F3Y–U7844–00	HOSE	1					
25	90601–155U4	BAND, HOSE 55	1					
26	90601–155U4	BAND, HOSE 55	1					
27	F3Y–U7767–00	CHECK VALVE	1					

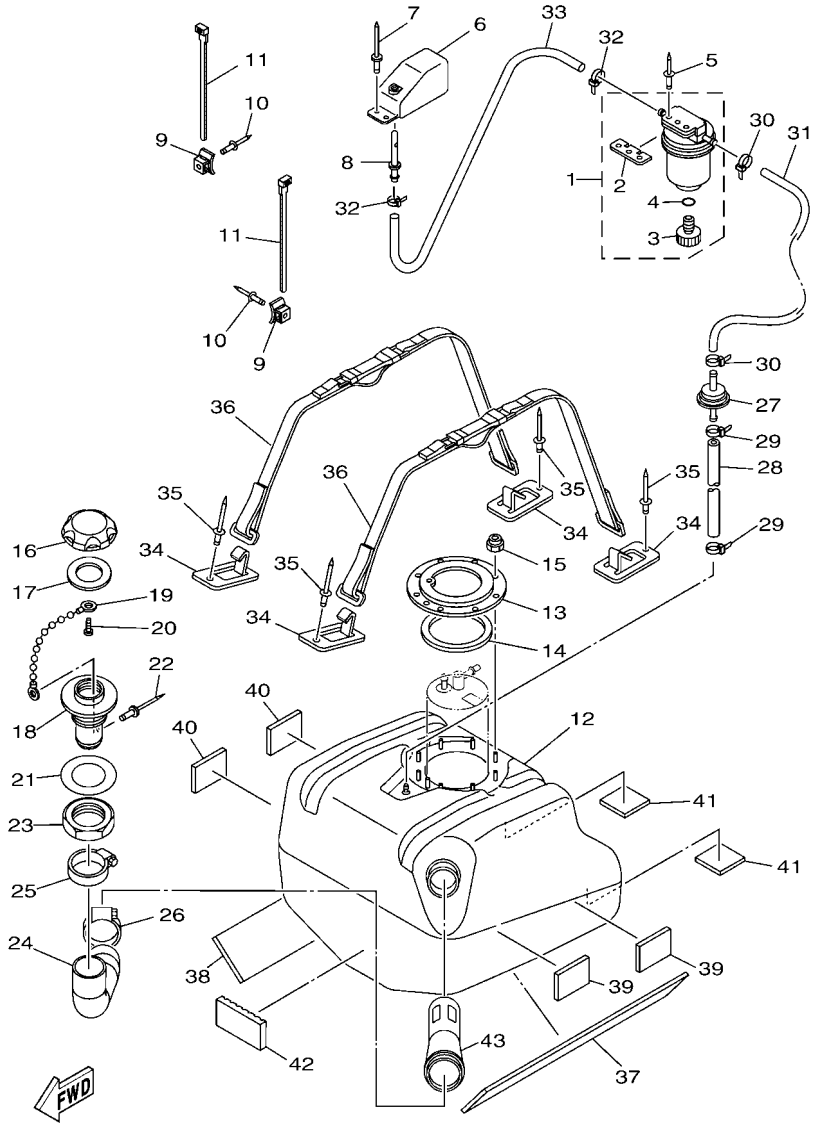

F3YD100-U260

FIG. 26 FUEL TANK

REF. NO.	PART NO.	DESCRIPTION	F3YR					REMARKS
28	GP7–U785H–00	HOSE, AIR VENT 3	1					
29	90465–11829	CLAMP	2					
30	90465–11829	CLAMP	2					
31	F3Y–U7856–00	HOSE, AIR VENT 3	1					
32	90465–11829	CLAMP	2					
33	GP7–U785G–10	HOSE, AIR VENT	1					
34	F1K–U5772–04	HOOK A	4					
35	90267–489U1	RIVET,BLIND	4					
36	F3Y–67743–01	BELT, TANK 1	2					
37	F2S–U759B–00	MAT 1	1					
38	F2S–U759B–00	MAT 1	1					
39	F1W–U759C–01	MAT 2	2					
40	F1W–U759C–01	MAT 2	2					
41	F1K–U759C–00	MAT 2	2					
42	F1S–U8221–00	PAD, BATTERY	1					
43	F4L–U773D–00	TUBE	1					

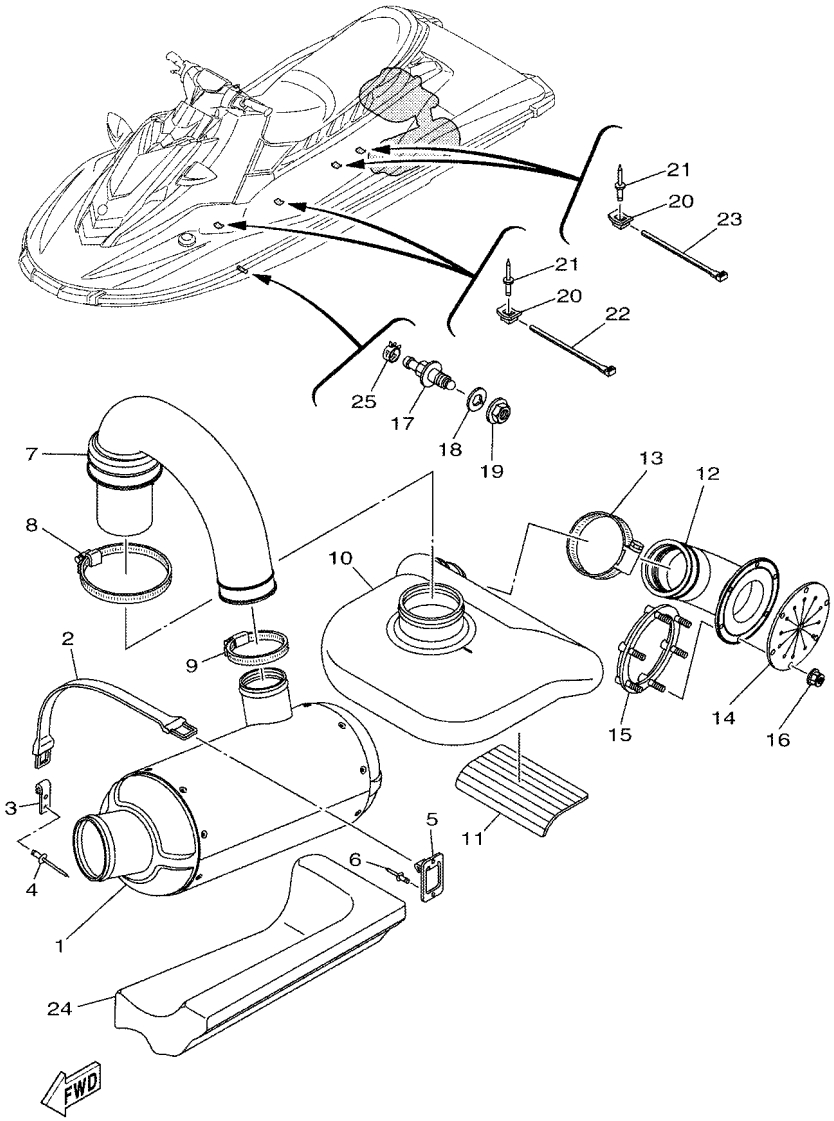

F3YD100-U270

FIG. 27 EXHAUST 3

REF. NO.	PART NO.	DESCRIPTION	F3YR					REMARKS
1	F3Y–U7550–01	WATER LOCK COMP.	1					
2	EU0–U821D–00	BAND,BATTERY 1	1					
3	GA7–65772–00	HOOK A	1					
4	90267–489U1	RIVET,BLIND	2					
5	F1K–U5772–04	HOOK A	1					
6	90267–489U1	RIVET,BLIND	1					
7	F3Y–U7555–00	HOSE, EXHAUST	1					
8	90601–179U8	BAND, HOSE 79	1					
9	90450–99804	HOSE CLAMP ASSY	1					
10	F3Y–U4261–00	TANK, WATER	1					
11	F1S–U8221–00	PAD, BATTERY	1					
12	F3Y–U758D–00	HOSE,EXHAUST 3	1					
13	90601–179U8	BAND, HOSE 79	1					
14	F1B–U751G–10	VALVE, EXHAUST	1					
15	F1S–U757B–01	PLATE	1					
16	F2N–U142L–00	NUT, LOCK	6					
17	F2C–U753B–01	PILOT, WATER	1					
18	F2C–U7564–00	GASKET	1					
19	F2C–U2733–00	NUT	1					
20	F1W–U828M–00	BASE, CLAMP	4					
21	90267–48806	RIVET, BLIND	4					
22	90464–32801	CLAMP	2					
23	90601–200U2	BAND	2					
24	F3Y–U892F–00	FLOATATION, BASE 1	1					
25	90467–150A5	CLIP	1					

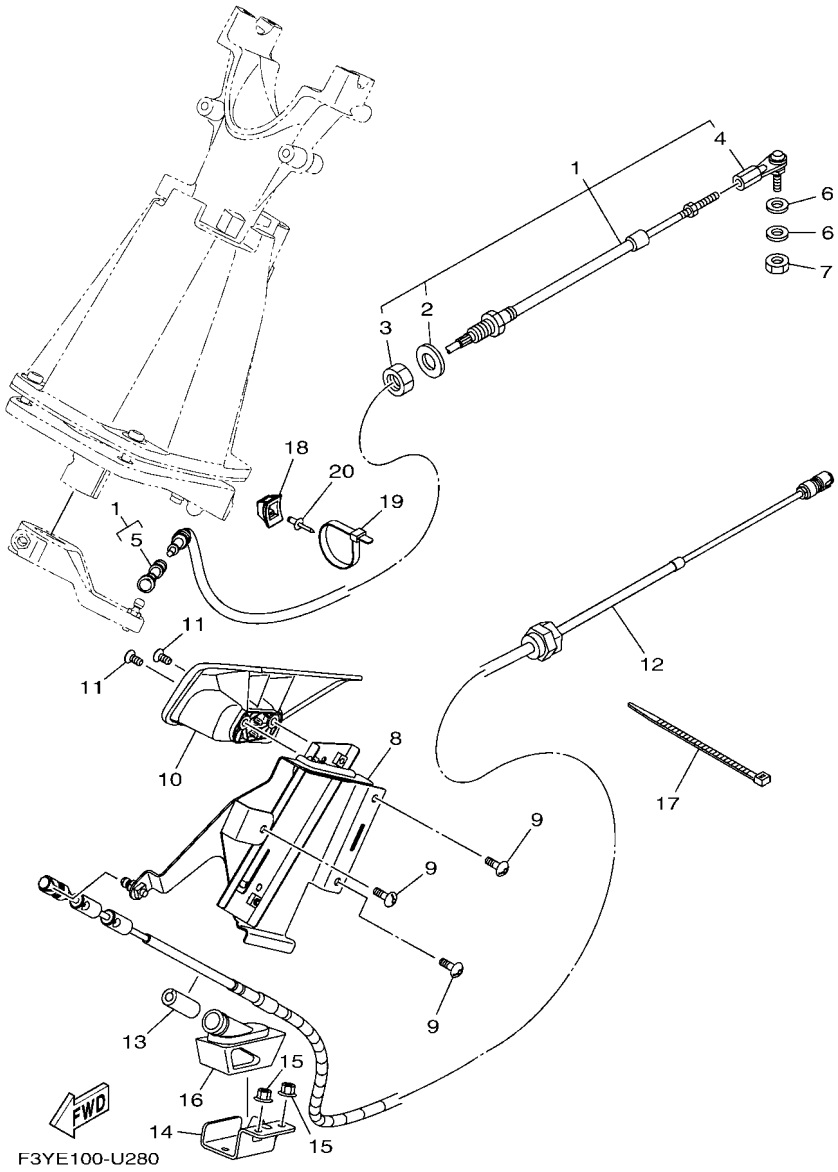

FIG. 28 CONTROL CABLE

REF. NO.	PART NO.	DESCRIPTION	F3YR					REMARKS
1	F3Y–61481–04	CABLE, STEERING	1					
2	F1B–61438–00	.PACKING C	1					
3	F1B–6151S–01	.NUT	1					
4	F3Y–61461–10	.STUD, JOINT BALL	1					
5	F2N–61460–00	.BALL JOINT ASSY	1					
6	90201–06906	WASHER, PLATE	2					
7	9538R–06700	NUT	1					
8	F3Y–U134A–00	REMOCON. LEVER ASSY.	1					
9	90111–06873	BOLT,HEX. SOCKET BUTTON	3					
10	F3Y–U2714–00	GRIP	1					FOR YELLOW
	F3Y–U2714–10	GRIP	1					FOR WHITE
11	90151–06815	SCREW, COUNTERSUNK	2					
12	F3Y–U149C–01	CABLE,REVERSE	1					
13	F1W–U146G–00	PACKING, CABLE	1					
14	F3Y–U1467–10	BRACKET,STOPPER CABLE	1					
15	F2N–U142L–00	NUT, LOCK	2					
16	F3Y–U146G–00	PACKING, CABLE	1					
17	90465–11829	CLAMP	1					
18	F1W–U828M–00	BASE, CLAMP	1					
19	90464–32801	CLAMP	1					
20	90267–48806	RIVET, BLIND	1					

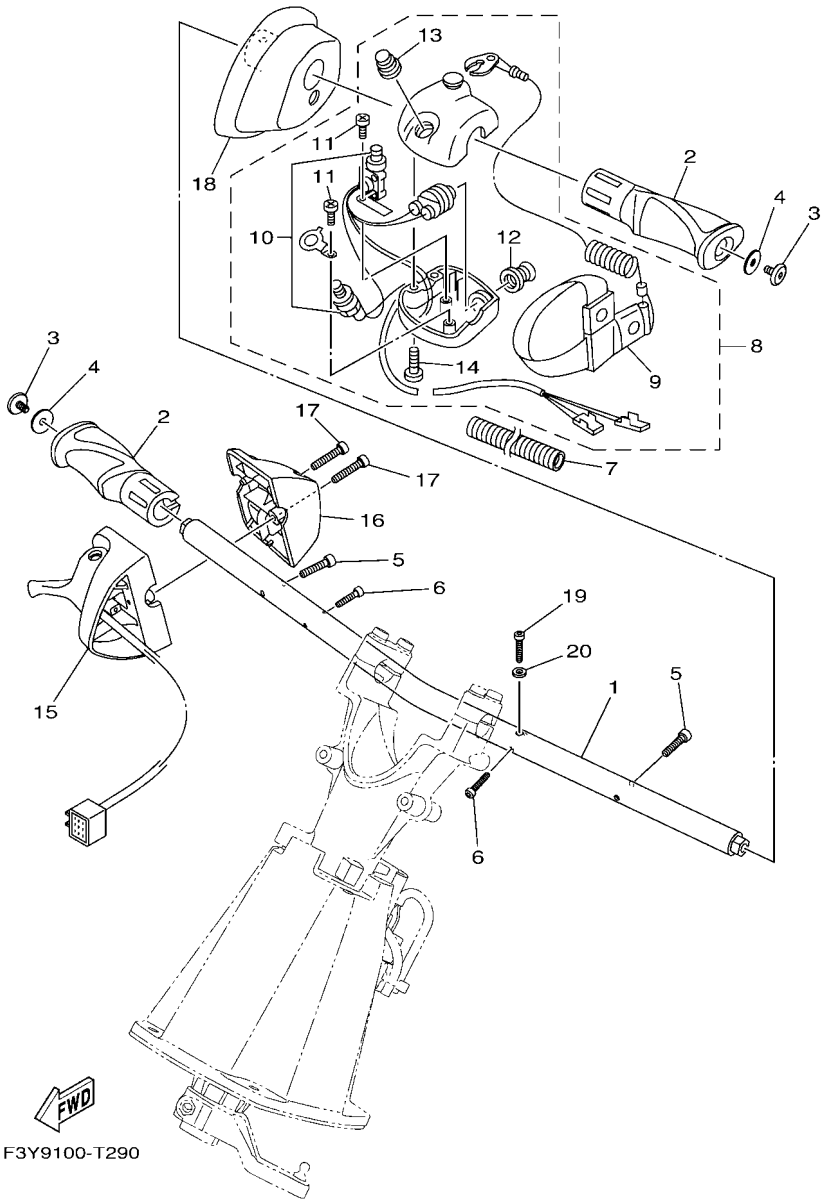

FIG. 29 STEERING 1

REF. NO.	PART NO.	DESCRIPTION	F3YR					REMARKS
1	F3Y–U1552–00	HANDLE	1					
2	F2S–U155D–03	GRIP, HANDLE	2					
3	90110–06382	BOLT, HEXAGON SOCKET HEAD	2					
4	90201–068G0	WASHER, PLATE	2					
5	F2S–U1516–00	BOLT	2					
6	91380–04030	BOLT	1					
7	F3Y–U773D–00	TUBE	1					
8	F3Y–68310–00	SWITCH BOX ASSY	1					
9	EW2–68348–00	.LANYARD, STOP SWITCH	1					
10	FK7–68311–02	.SWITCH SUB ASSY	1					
11	97880–03008	.SCREW, PAN HEAD	2					
12	FK7–68312–02	.STOP BUTTON COMP	1					
13	FK7–68313–02	.START BUTTON COMP.	1					
14	97880–05025	.SCREW, PAN HEAD	2					
15	6CS–14305–12	THROTTLE LEVER COMP	1					
16	6EX–82154–00	CASE	1					
17	6CS–6725F–00	BOLT, THROTTLE	2					
18	F3Y–U143G–00	SPACER	1					
19	91380–04030	BOLT	1					
20	90201–04810	WASHER, PLATE	1					

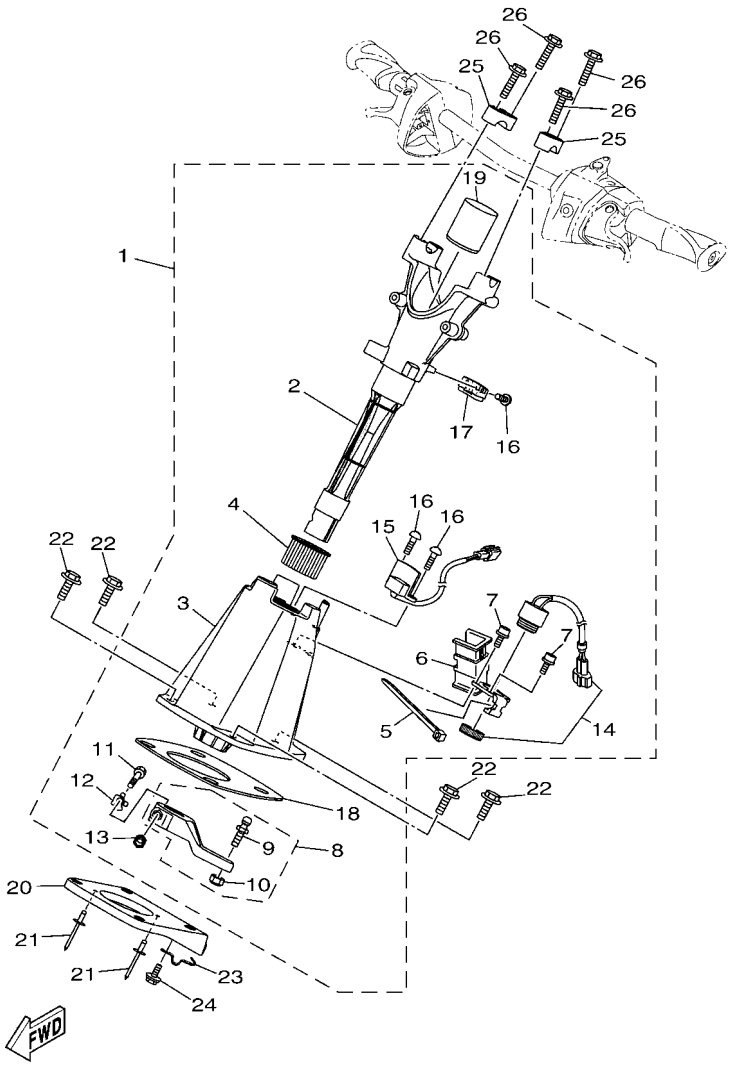

F3Y1100-S300

FIG. 30 STEERING 2

REF. NO.	PART NO.	DESCRIPTION	F3YR					REMARKS
1	F3Y–61400–03	STEERING MASTER ASSY	1					
2	F3Y–6152D–00	.SHAFT	1					
3	F2X–6152M–02	.HOUSING ASSY	1					
4	F1K–6134M–00	.BUSH	1					
5	703–82591–00	.BAND	1					
6	F2X–6146H–00	.SPACER, BRKT.	1					
7	F1B–613C1–00	.SCREW	2					
8	F1K–6153R–00	.ARM ASSY.	1					
9	EU0–61461–02	..STUD, JOINT BALL	1					
10	95720–06300	..NUT, SELF-LOCKING	1					
11	F1K–61355–00	.BOLT	1					
12	F1K–6142B–00	.PLATE, RETAINING	1					
13	95720–08300	.NUT, SELF-LOCKING	1					
14	F1S–68341–00	.BUZZER	1					
15	F2X–6838B–02	.SENSOR, MAGNET	1					
16	F2X–613C1–00	.SCREW	3					
17	F2X–6838C–01	.MAGNET	1					
18	F1K–6143C–00	.SEAL, RUBBER	1					
19	F2X–61435–00	.PIPE, SEAL	1					
20	F3Y–U1467–00	BRACKET,STOPPER CABLE	1					
21	90267–489U2	RIVET, BLIND	2					
22	90119–08836	BOLT, WITH WASHER	4					
23	F1K–U1468–03	STOPPER, CABLE	1					
24	90119–069UH	BOLT, WITH WASHER	1					
25	EU0–23814–31	HOLDER, HANDLE UPPER	2					
26	90119–08827	BOLT, WITH WASHER	4					

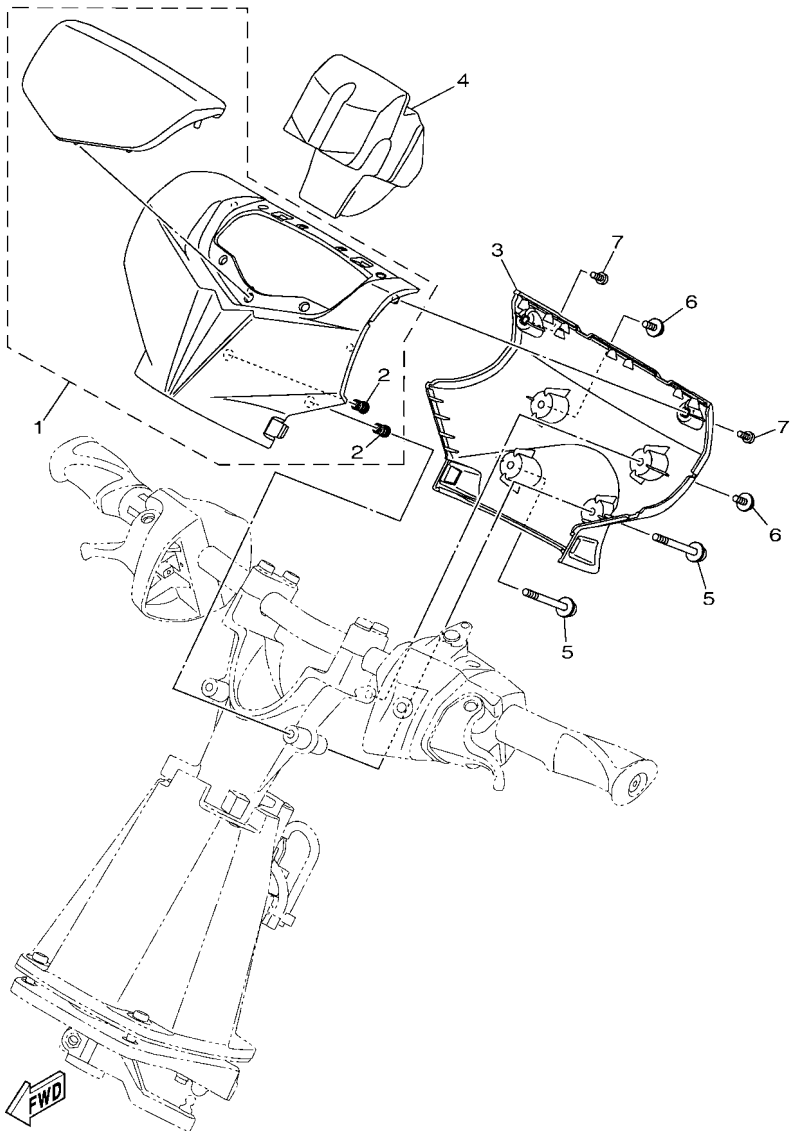

F3Y7100-T310

FIG. 31 STEERING 3

REF. NO.	PART NO.	DESCRIPTION	F3YR					REMARKS
1	F3Y–U1421–30	PAD, STEERING	1					FOR YELLOW
	F3Y–U1421–60	PAD, STEERING	1					FOR WHITE
2	F3Y–U517E–00	.NUT	2					
3	F3Y–U143E–00	PAD, STEERING 2	1					
4	F3Y–U156E–00	PAD 1	1					
5	F3Y–U1355–00	BOLT	2					
6	F3Y–U2624–00	BOLT	2					
7	F2S–U13C1–00	SCREW	2					

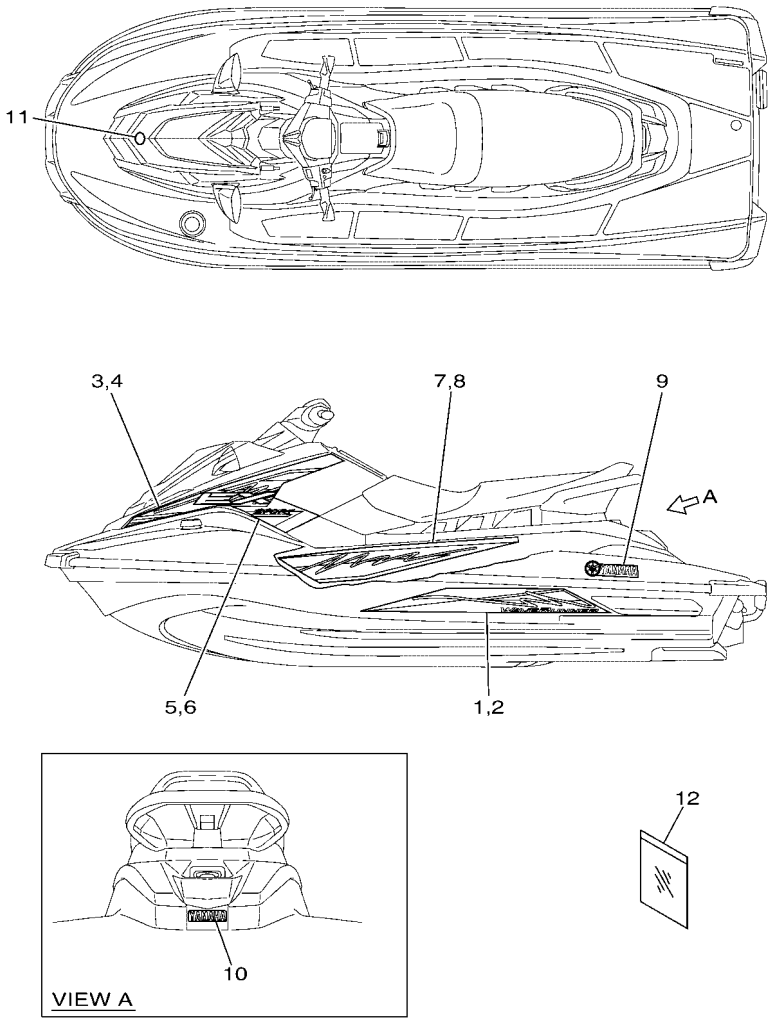

F3YR100-X320

FIG. 32 GRAPHICS

REF. NO.	PART NO.	DESCRIPTION	F3YR					REMARKS
1	F3Y–U417B–V0	GRAPHIC 1 (LH)	1					FOR YELLOW
	F3Y–U417B–W0	GRAPHIC 1 (LH)	1					FOR WHITE
2	F3Y–U417C–V0	GRAPHIC 2 (RH)	1					FOR YELLOW
	F3Y–U417C–W0	GRAPHIC 2 (RH)	1					FOR WHITE
3	F3Y–U417D–V0	GRAPHIC 3 (LH)	1					FOR YELLOW
	F3Y–U417D–W0	GRAPHIC 3 (LH)	1					FOR WHITE
4	F3Y–U417E–V0	GRAPHIC 4 (RH)	1					FOR YELLOW
	F3Y–U417E–W0	GRAPHIC 4 (RH)	1					FOR WHITE
5	F3Y–U417F–V0	GRAPHIC 5 (LH)	1					FOR YELLOW
	F3Y–U417F–W0	GRAPHIC 5 (LH)	1					FOR WHITE
6	F3Y–U417G–V0	GRAPHIC 6 (RH)	1					FOR YELLOW
	F3Y–U417G–W0	GRAPHIC 6 (RH)	1					FOR WHITE
7	F3Y–U417H–V0	GRAPHIC 7 (LH)	1					FOR YELLOW
	F3Y–U417H–W0	GRAPHIC 7 (LH)	1					FOR WHITE
8	F3Y–U417J–V0	GRAPHIC 8 (RH)	1					FOR YELLOW
	F3Y–U417J–W0	GRAPHIC 8 (RH)	1					FOR WHITE
9	F4L–U411C–10	EMBLEM, YAMAHA	2					FOR YELLOW
	F2N–U411C–00	EMBLEM, YAMAHA	2					FOR WHITE
10	F4L–U4114–10	MARK, YAMAHA A	1					FOR YELLOW
	F1B–U411C–02	EMBLEM, YAMAHA	1					FOR WHITE
11	F3Y–U411H–02	EMBLEM, TUNING FORK	1					
12	F3Y–U5901–00	BAG, VINYL	1					

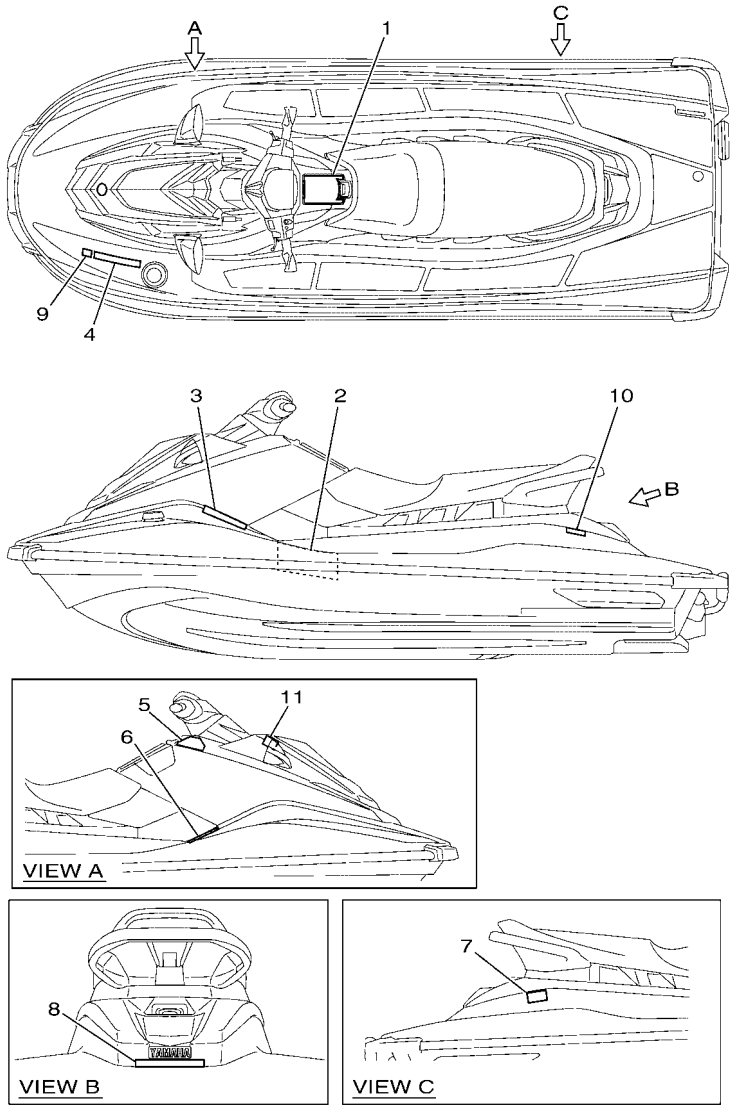

F3YL100-W330

FIG. 33 IMPORTANT LABELS

REF. NO.	PART NO.	DESCRIPTION	F3YR					REMARKS
1	F3Y–U41B1–30	LABEL, WARNING UNIFORM 1	1					
2	F3V–U41B1–00	LABEL, WARNING UNIFORM 1	1					FOR YELLOW
	F3V–U41B1–10	LABEL, WARNING UNIFORM 1	1					FOR WHITE
3	F3V–U41B1–20	LABEL, WARNING UNIFORM 1	1					FOR YELLOW
	F3V–U41B1–30	LABEL, WARNING UNIFORM 1	1					FOR WHITE
4	F3Y–U415B–10	LABEL, WARNING(FUEL)	1					FOR YELLOW
	F3Y–U415B–30	LABEL, WARNING(FUEL)	1					FOR WHITE
5	F3K–U41D5–30	LABEL, WARNING SHIFT LEVER	1					FOR YELLOW
	F3K–U41D5–10	LABEL, WARNING SHIFT LEVER	1					FOR WHITE
6	F1B–U41F5–21	LABEL, FIRE EXTINGUISHER 1	1					FOR YELLOW
	F1B–U41F5–11	LABEL, FIRE EXTINGUISHER 1	1					FOR WHITE
7	F3V–U416A–10	WARNING LABEL ASSY.	1					FOR YELLOW
	F3V–U416A–30	WARNING LABEL ASSY.	1					FOR WHITE
8	F4E–U41E1–30	LABEL, SET 1	1					FOR YELLOW
	F4E–U41E1–40	LABEL, SET 1	1					FOR WHITE
9	B4F–F817K–00	LABEL, FUEL	1					FOR EUR
10	F1S–U419E–01	LABEL 4	1					FOR YELLOW CAN
	GJ3–U419E–00	LABEL 4	1					FOR WHITE CAN
11	F3Y–U413P–30	LABEL, BUILDERS PLATE	1					FOR EUR

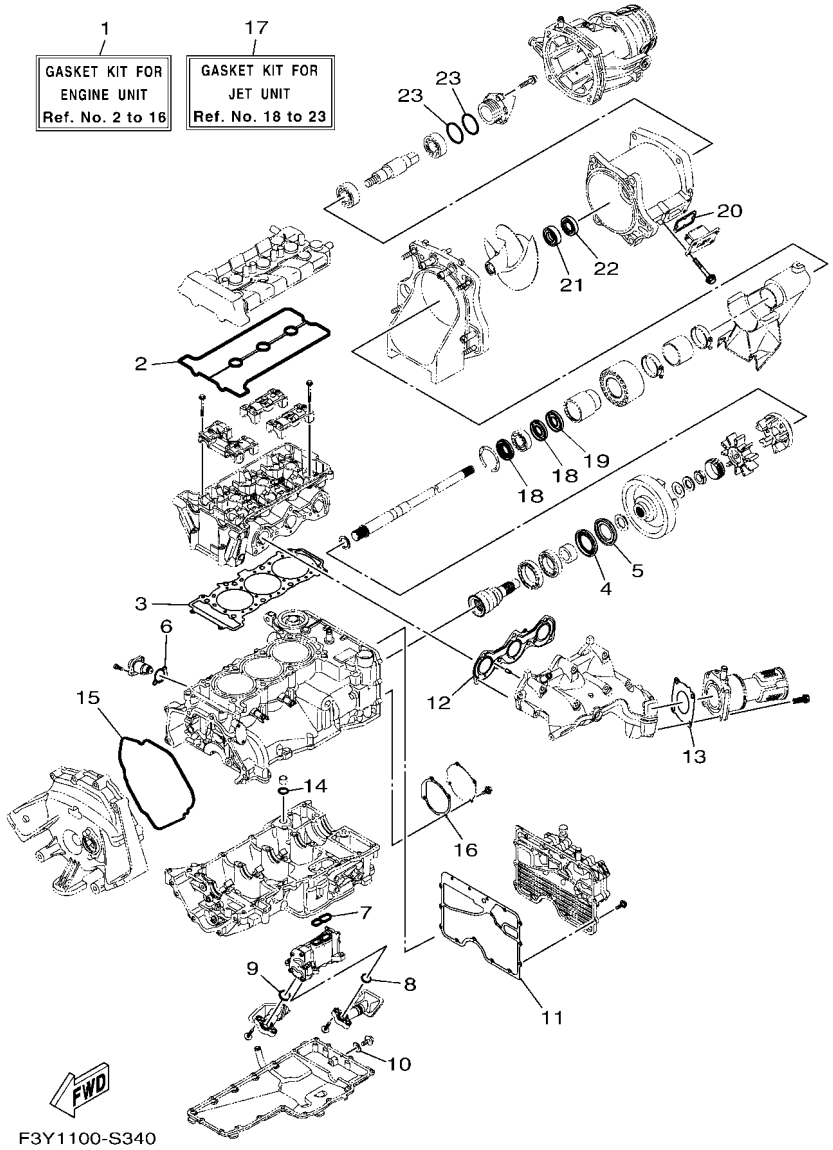

FIG. 34 REPAIR KIT 1

REF. NO.	PART NO.	DESCRIPTION	F3YR					REMARKS
1	6GA–W0001–01	GASKET KIT FOR ENGINE UNIT	1					
2	6EY–11193–00	.GASKET, HEAD COVER 1	1					
3	6EY–11181–00	.GASKET, CYLINDER HEAD 1	1					
4	93101–40001	.OIL SEAL	1					
5	93101–40002	.OIL SEAL	1					
6	2C0–12213–00	.GASKET, TENSIONER CASE	1					
7	6EY–13563–00	.GASKET	1					
8	6EY–13477–00	.GASKET	1					
9	6EY–13476–00	.GASKET	1					
10	90430–08209	.GASKET	1					
11	6EY–15453–00	.GASKET	1					
12	6GA–14613–00	.GASKET, EXHAUST PIPE	1					
13	6GA–14739–00	.GASKET, MUFFLER DAMPER 1	1					
14	93210–17010	.O-RING	1					
15	6EY–15461–00	.GASKET, CRANKCASE COVER 2	1					
16	6EY–15463–01	.GASKET, 2	1					
17	6GA–W0001–20	GASKET KIT FOR JET UNIT	1					
18	93101–25M55	.OIL SEAL	2					
19	93101–25M56	.OIL SEAL	1					
20	6GA–G2414–00	.O-RING	1					
21	93102–25M34	.OIL SEAL	1					
22	93101–25M50	.OIL SEAL	1					
23	93210–44003	.O-RING	2					

PART NO.	REF. NO.
6EY–11102–00	1 – 2
6EY–11110–00	1 – 1
6EY–11119–00	1 – 20
6EY–1111E–10	1 – 18
5VY–1111G–00	1 – 15
6EY–11125–00	8 – 25
6EY–11126–10	8 – 27
2C0–11133–11	1 – 3
8HF–11134–10	1 – 4
6EY–11164–00	8 – 20
6EY–11166–10	8 – 16
6EY–11181–00	1 – 16
	34 – 3
6EY–11191–10	1 – 9
6EY–11193–00	1 – 11
	34 – 2
69J–11301–11	2 – 22
68V–11325–02	2 – 23
67F–11328–01	2 – 24
6EY–11400–00	3 – 1
6EY–11406–00	3 – 14
2HC–11407–00	3 – 26
3LD–11416–10	3 – 6
3LD–11416–20	3 – 6
3LD–11416–30	3 – 6
3LD–11416–40	3 – 6
3LD–11416–50	3 – 6
3LD–11416–60	3 – 6
3LD–11416–70	3 – 6
8ES–11428–01	2 – 8
8ES–11454–00	3 – 28
2HC–11464–00	3 – 31
6EY–11478–00	3 – 30
6EY–11531–00	3 – 27
6EY–11557–00	3 – 20
6JF–11571–00	3 – 21
8KH–11603–02	3 – 8
8KH–11631–00	3 – 7
6EY–11633–00	3 – 9
B0F–11650–00	3 – 2
5JW–11654–00	3 – 3
5JW–11656–00	3 – 5
5JW–11656–10	3 – 5
5JW–11656–20	3 – 5
5JW–11656–30	3 – 5
5JW–11656–40	3 – 5
5JW–11656–50	3 – 5
6EY–11917–00	3 – 17

PART NO.	REF. NO.
8GL–12111–10	4 – 5
8GL–12113–00	4 – 8
1RC–12116–00	4 – 7
3D7–12117–00	4 – 9
1WG–12118–00	4 – 10
2HC–12119–00	4 – 11
8GL–12121–10	4 – 6
6EY–12153–01	4 – 13
1HX–12168–00	4 – 12
1HX–12168–20	4 – 12
1HX–12168–40	4 – 12
1HX–12168–60	4 – 12
1HX–12168–80	4 – 12
1HX–12168–A0	4 – 12
1HX–12168–F0	4 – 12
1HX–12168–H1	4 – 12
1HX–12168–K1	4 – 12
1HX–12168–M1	4 – 12
1HX–12168–R1	4 – 12
1HX–12168–U1	4 – 12
1HX–12168–W1	4 – 12
1HX–12168–Y1	4 – 12
1HX–12169–11	4 – 12
1HX–12169–31	4 – 12
1HX–12169–50	4 – 12
1HX–12169–70	4 – 12
1HX–12169–90	4 – 12
1HX–12169–E0	4 – 12
1HX–12169–G0	4 – 12
1HX–12169–J0	4 – 12
1HX–12169–L0	4 – 12
1HX–12169–N0	4 – 12
1HX–12169–T0	4 – 12
6EY–12170–00	4 – 1
2HC–12176–00	4 – 3
6EY–12180–00	4 – 2
8KH–12210–00	4 – 15
2C0–12213–00	4 – 16
	34 – 6
5BE–12241–01	1 – 10
6EY–12251–00	4 – 18
2HC–12252–00	4 – 19
6EY–12279–00	4 – 21
6D3–12411–00	10 – 27
6EY–12413–00	10 – 28
6EY–12577–00	10 – 21
6S5–12579–00	10 – 23
6EY–12580–00	10 – 3

PART NO.	REF. NO.
6EY–12584–00	10 – 8
6EY–12880–00	5 – 8
8ES–13284–00	2 – 17
6EY–13300–00	7 – 1
6EY–13355–00	7 – 2
6EY–13405–00	7 – 5
6EY–13406–00	7 – 8
6EY–13417–10	7 – 18
5GH–13440–61	7 – 17
6EY–13455–00	7 – 20
6EY–13470–01	8 – 2
6EY–13476–00	7 – 9
	34 – 9
6EY–13477–00	7 – 6
	34 – 8
6EY–13532–00	5 – 13
6EY–13556–00	8 – 3
8FP–13556–10	5 – 11
6EY–13557–00	8 – 5
6EY–13563–00	7 – 4
	34 – 7
6EY–13641–02	5 – 2
6EY–13750–00	5 – 1
2HC–13761–00	5 – 5
6S5–13907–04	18 – 1
6EY–14126–00	5 – 4
6EY–14156–00	5 – 3
68V–1416A–00	5 – 6
6CS–14305–12	29 – 15
6EY–14410–10	6 – 7
6EY–14419–00	6 – 12
6EY–14436–00	6 – 11
6BH–14445–00	5 – 12
6EY–14451–00	6 – 8
6EY–14452–00	6 – 10
6EY–14462–00	6 – 9
6EY–14470–01	6 – 16
6EY–14485–00	6 – 13
6GA–14613–00	9 – 1
	34 – 12
6GA–1469W–00	9 – 8
6GA–14711–00	9 – 2
6GA–14739–00	9 – 6
	34 – 13
6GA–14752–00	9 – 13
6GA–14784–00	9 – 7
6EY–15109–09	2 – 2
6EY–15362–10	8 – 14

PART NO.	REF. NO.
3Y1–15363–10	1 – 12
4JT–15381–01	2 – 6
6EY–15421–00	2 – 18
6EY–15453–00	8 – 1
	34 – 11
6EY–15461–00	2 – 19
	34 – 15
6EY–15463–01	2 – 29
	34 – 16
6EY–15486–00	7 – 14
2HC–15512–00	14 – 2
8FA–15515–00	14 – 1
8ES–15521–00	14 – 3
6EY–15589–01	2 – 28
6EY–15590–00	14 – 4
EU0–23814–31	30 – 25
70R–24489–00	26 – 4
6CN–2450B–10	5 – 16
70R–24543–00	26 – 3
6EY–24864–00	10 – 19
6EX–2812A–00	16 – 25
6EY–41661–10	19 – 4
6EY–41662–00	19 – 5
6GA–44517–00	19 – 1
6EY–44574–00	19 – 2
6EY–45155–00	3 – 25
6EY–4581J–00	3 – 35
68N–5112T–00	22 – 12
6DU–51319–00	11 – 16
F1K–6134M–00	30 – 4
F1K–61355–00	30 – 11
F1B–613C1–00	30 – 7
F2X–613C1–00	30 – 16
F3Y–61400–03	30 – 1
F1K–6142B–00	30 – 12
F2X–61435–00	30 – 19
F1B–61438–00	28 – 2
F1K–6143C–00	30 – 18
F2N–61460–00	28 – 5
EU0–61461–02	30 – 9
F3Y–61461–10	28 – 4
F2X–6146H–00	30 – 6
F3Y–61481–04	28 – 1
F1B–6151S–01	28 – 3
F3Y–6152D–00	30 – 2
F2X–6152M–02	30 – 3
F1K–6153R–00	30 – 8
F1K–61624–00	22 – 21

PART NO.	REF. NO.
F0X–61637–00	22 – 24
EU0–61652–00	10 – 7
	22 – 2
F0X–61652–01	22 – 25
EW2–62142–00	26 – 2
F1G–62149–00	26 – 8
F2F–6214A–00	26 – 1
GP7–62159–02	26 – 6
GA7–65772–00	27 – 3
6CS–6725F–00	29 – 17
F3Y–67743–01	26 – 36
F1B–67747–00	26 – 14
GU2–6822E–01	18 – 18
6S5–682E0–00	18 – 2
F3Y–68310–00	29 – 8
FK7–68311–02	29 – 10
FK7–68312–02	29 – 12
FK7–68313–02	29 – 13
F1S–68341–00	30 – 14
EW2–68348–00	29 – 9
F2X–6838B–02	30 – 15
F2X–6838C–01	30 – 17
4D9–81168–00	17 – 12
60E–81315–01	17 – 2
60E–81328–00	14 – 10
6S5–81364–11	8 – 9
6EY–81410–00	14 – 8
6EY–81450–00	14 – 7
6EY–81800–00	15 – 1
6EY–81826–00	15 – 6
6EY–81840–00	15 – 4
11H–81844–00	15 – 2
1FK–81847–00	15 – 3
3TB–81847–00	15 – 5
	15 – 7
6EY–81940–09	16 – 13
6EY–81953–00	16 – 15
6EX–8195A–00	16 – 24
6D3–81960–01	16 – 10
6EY–81975–00	16 – 6
6GA–82115–01	16 – 16
6GA–82116–00	18 – 29
6EY–82117–00	16 – 17
67F–82151–00	16 – 22
67F–82151–10	16 – 23
67F–82151–30	16 – 20
67F–82151–40	16 – 21
6EX–82154–00	29 – 16

PART NO.	REF. NO.
6EX–82170–12	16 – 19
6EX–82310–02	16 – 4
6A0–82317–01	16 – 8
	16 – 26
6EY–82355–00	16 – 14
5S7–82380–00	5 – 7
68V–82504–00	17 – 1
60E–82556–00	18 – 3
6CR–82560–00	17 – 9
6ET–82576–00	17 – 3
703–82591–00	30 – 5
6EY–82593–01	16 – 29
6GA–8259L–50	16 – 12
6CS–8273J–10	17 – 14
6EY–83618–10	17 – 18
60E–83627–00	6 – 17
6EY–84385–00	10 – 6
6AA–85542–00	16 – 27
6DE–85790–00	17 – 17
61A–85790–01	17 – 7
8FP–85886–00	5 – 14
2S3–85896–02	17 – 11
6GA–8591A–31	16 – 2
6EY–8591S–00	16 – 3
6GA–E243A–00	10 – 30
6GA–E243E–00	10 – 1
67X–E2590–00	10 – 32
67X–E2590–10	10 – 32
B4F–F817K–00	33 – 9
6GA–G2414–00	11 – 7
	34 – 20
6GA–G5235–00	12 – 2
6GA–G5332–00	12 – 1
6GA–G5511–00	12 – 3
6GA–G5514–00	11 – 10
6GA–G5593–00	12 – 8
6GA–G5831–00	11 – 1
6GA–G6882–00	11 – 6
5FU–H2100–20	18 – 4
6GA–R1312–01	11 – 4
6BU–R1313–00	11 – 25
6GA–R1314–00	13 – 1
6GA–R1318–00	11 – 18
6GA–R1321–00	11 – 17
6EX–R1326–10	11 – 13
6GA–R1333–00	11 – 34
6GA–R1381–00	12 – 13
6GA–R1959–00	11 – 28

PART NO.	REF. NO.
6GA–R2358–00	13 – 8
F3Y–U1174–00	23 – 4
	23 – 14
F3Y–U1338–00	25 – 20
F3Y–U134A–00	28 – 8
F3Y–U1355–00	31 – 5
F2S–U13C1–00	22 – 46
	31 – 7
F3Y–U1421–30	31 – 1
F3Y–U1421–60	31 – 1
F3Y–U1426–00	11 – 35
	11 – 36
F2N–U142L–00	12 – 16
	18 – 13
	23 – 3
	23 – 13
	27 – 16
	28 – 15
F3Y–U142L–00	25 – 17
F3Y–U143E–00	31 – 3
F3Y–U143G–00	29 – 18
6GA–U1461–10	13 – 11
F3Y–U1467–00	30 – 20
F3Y–U1467–10	28 – 14
F1K–U1468–03	30 – 23
F1W–U146G–00	28 – 13
F3Y–U146G–00	28 – 16
F3Y–U149C–01	28 – 12
F2S–U1516–00	29 – 5
F3Y–U153K–00	21 – 7
F3Y–U1552–00	29 – 1
F2S–U155D–03	29 – 2
F3Y–U156E–00	31 – 4
F2N–U1628–02	22 – 16
	25 – 21
F1B–U1653–02	22 – 20
F2C–U1743–00	18 – 5
F3Y–U2127–00	24 – 1
F3Y–U213G–01	24 – 2
F3Y–U2155–01	12 – 10
F1S–U2280–02	22 – 32
F1S–U2285–00	22 – 33
F3Y–U2511–00	23 – 1
F3Y–U2512–03	23 – 5
F3Y–U2519–21	23 – 6
F3Y–U2519–82	23 – 6
F3Y–U251D–00	23 – 9
F3Y–U251E–00	23 – 10

PART NO.	REF. NO.
F3Y–U252C–00	23 – 15
F3Y–U252D–30	23 – 16
F3Y–U252D–81	23 – 16
F3Y–U2624–00	31 – 6
F3Y–U264L–00	21 – 2
F3Y–U2663–00	21 – 4
F3Y–U266B–01	25 – 6
F3Y–U266D–10	25 – 11
F3Y–U266E–10	25 – 13
F1W–U269B–00	22 – 1
F3Y–U2714–00	28 – 10
F3Y–U2714–10	28 – 10
F3Y–U271B–00	25 – 15
F2C–U2733–00	27 – 19
F3Y–U273B–10	11 – 30
F3Y–U278A–02	22 – 37
F2S–U278F–00	22 – 38
F2S–U278H–00	22 – 39
F3Y–U2875–00	21 – 9
F4L–U3222–00	11 – 31
F3Y–U351H–30	23 – 20
F3Y–U351J–30	23 – 21
F3Y–U351K–30	23 – 22
F3Y–U351M–30	23 – 23
F3Y–U351N–30	23 – 24
F3Y–U351P–30	23 – 25
F3Y–U351R–30	23 – 26
F3Y–U351S–30	23 – 27
F3Y–U353B–E0	20 – 7
F3Y–U353B–F0	20 – 8
F3Y–U3581–30	23 – 19
F3Y–U371A–P0	25 – 1
F3Y–U371B–P0	25 – 2
F3Y–U3743–01	25 – 5
F3Y–U3743–20	25 – 5
F3Y–U3746–00	12 – 15
F1K–U3774–00	25 – 7
F1B–U3850–02	25 – 3
F4L–U4114–10	32 – 10
F2N–U411C–00	32 – 9
F1B–U411C–02	32 – 10
F4L–U411C–10	32 – 9
F3Y–U411H–02	32 – 11
F3Y–U413P–30	33 – 11
F3Y–U415B–10	33 – 4
F3Y–U415B–30	33 – 4
F3V–U416A–10	33 – 7
F3V–U416A–30	33 – 7

PART NO.	REF. NO.
F3Y–U417B–V0	32 – 1
F3Y–U417B–W0	32 – 1
F3Y–U417C–V0	32 – 2
F3Y–U417C–W0	32 – 2
F3Y–U417D–V0	32 – 3
F3Y–U417D–W0	32 – 3
F3Y–U417E–V0	32 – 4
F3Y–U417E–W0	32 – 4
F3Y–U417F–V0	32 – 5
F3Y–U417F–W0	32 – 5
F3Y–U417G–V0	32 – 6
F3Y–U417G–W0	32 – 6
F3Y–U417H–V0	32 – 7
F3Y–U417H–W0	32 – 7
F3Y–U417J–V0	32 – 8
F3Y–U417J–W0	32 – 8
GJ3–U419E–00	33 – 10
F1S–U419E–01	33 – 10
F3V–U41B1–00	33 – 2
F3V–U41B1–10	33 – 2
F3V–U41B1–20	33 – 3
F3V–U41B1–30	33 – 3
F3Y–U41B1–30	33 – 1
F3K–U41D5–10	33 – 5
F3K–U41D5–30	33 – 5
F4E–U41E1–30	33 – 8
F4E–U41E1–40	33 – 8
F1B–U41F5–11	33 – 6
F1B–U41F5–21	33 – 6
F3Y–U4261–00	27 – 10
F3Y–U475A–00	21 – 3
F1W–U491K–00	23 – 11
F3Y–U491K–02	25 – 14
F3Y–U4953–00	21 – 11
	21 – 13
GP7–U4953–10	22 – 18
	22 – 19
	25 – 22
F3Y–U4994–00	22 – 44
F3Y–U513M–00	21 – 6
F3Y–U516N–00	20 – 1
F3Y–U516N–10	20 – 1
F3Y–U516P–00	20 – 2
F2X–U5175–00	20 – 3
	20 – 12
F3Y–U517B–00–P3	21 – 1
F3Y–U517B–00–P5	21 – 1
F3Y–U517E–00	31 – 2

PART NO.	REF. NO.
F3Y–U517H–00	21 – 8
F1K–U5772–04	26 – 34
	27 – 5
F3Y–U5901–00	32 – 12
F3Y–U591A–10	25 – 12
F3Y–U592A–10	25 – 10
F3Y–U596B–10	21 – 10
F3Y–U596C–10	21 – 12
F3Y–U72C0–00	11 – 29
6GA–U72M2–00	11 – 19
EU0–U7354–00–01	19 – 10
EU0–U7354–00–03	19 – 10
EU0–U7354–00–05	19 – 10
EU0–U7354–00–10	19 – 10
EU0–U7354–00–20	19 – 10
F1B–U751G–10	27 – 14
F2C–U753B–01	27 – 17
F3Y–U7550–01	27 – 1
F3Y–U7555–00	27 – 7
F3Y–U7557–00	11 – 41
F2C–U7564–00	27 – 18
GJ1–U7578–21	18 – 21
F1S–U757B–01	27 – 15
F3Y–U758D–00	27 – 12
F2S–U759B–00	26 – 37
	26 – 38
F3Y–U759B–00	20 – 6
F1K–U759C–00	26 – 41
F1W–U759C–01	18 – 7
	26 – 39
	26 – 40
F1B–U761D–02	22 – 4
F3Y–U7711–02	26 – 12
6GA–U771G–00	22 – 10
6GA–U773D–00	22 – 14
F3Y–U773D–00	29 – 7
F4L–U773D–00	26 – 43
F3Y–U773D–10	10 – 2
F3Y–U773D–20	10 – 31
6GA–U773E–00	22 – 11
F3Y–U7767–00	26 – 27
F1B–U7773–00	26 – 13
F2S–U7823–01	18 – 17
F2N–U7831–10	26 – 16
GP7–U7832–01	26 – 17
GP7–U7833–11	26 – 18
GP7–U7834–00	26 – 21
GP7–U7835–00	26 – 19

PART NO.	REF. NO.
GP7–U783F–00	26 – 23
F3Y–U7844–00	26 – 24
6GA–U784C–00	22 – 13
F3Y–U7856–00	26 – 31
GP7–U785G–10	26 – 33
GP7–U785H–00	26 – 28
F2N–U8169–00	22 – 31
F4L–U820A–00	18 – 16
F2S–U8211–00	18 – 9
EU0–U821D–00	27 – 2
F4P–U821D–00	18 – 15
F1S–U8221–00	18 – 8
	26 – 42
	27 – 11
EU0–U8221–30	18 – 6
F3J–U822E–00	18 – 19
F2C–U826C–00	25 – 18
F3Y–U828H–30	20 – 9
F1W–U828M–00	18 – 22
	22 – 7
	24 – 3
	26 – 9
	27 – 20
	28 – 18
F0V–U8572–10	11 – 32
F2S–U8577–00	11 – 33
F2S–U8592–00	18 – 10
F2S–U8593–00	18 – 11
F3Y–U882F–00	22 – 42
F3Y–U883B–00	12 – 19
F3Y–U883E–00	12 – 14
F3Y–U883N–00	22 – 27
F3Y–U883P–00	22 – 28
F3Y–U883T–00	22 – 29
F3Y–U884R–00	22 – 43
F3Y–U892D–00	12 – 20
F3Y–U892F–00	27 – 24
6GA–W0001–01	34 – 1
6GA–W0001–20	34 – 17
6EY–W009B–10	2 – 1
90105–06027	1 – 5
90105–06035	10 – 29
90105–06M07	2 – 25
90105–06M15	8 – 21
90105–07004	4 – 4
90105–08243	5 – 9
90105–08860	22 – 30
90105–10M49	19 – 6

PART NO.	REF. NO.
90105–12101	3 – 12
90109–06295	4 – 20
90109–06308	2 – 12
90109–066F0	1 – 14
90109–06832	12 – 17
90109–06M92	19 – 3
90109–08041	11 – 39
90110–06040	22 – 26
90110–06172	7 – 7
	7 – 10
90110–06274	4 – 17
90110–06287	7 – 12
90110–06335	7 – 13
90110–06382	29 – 3
90110–06822	11 – 15
90110–08212	14 – 5
90111–06803	23 – 2
	23 – 12
90111–06873	20 – 11
	28 – 9
90119–06078	1 – 19
90119–06311	16 – 7
90119–06820	20 – 14
90119–06832	18 – 14
90119–06882	20 – 5
90119–06889	11 – 8
90119–06891	12 – 11
	22 – 45
90119–069UH	30 – 24
90119–069UP	25 – 4
90119–069UX	13 – 4
90119–06MA3	17 – 16
90119–08034	9 – 4
90119–08097	9 – 5
90119–08169	6 – 3
90119–08187	6 – 4
90119–08823	19 – 9
90119–08827	11 – 24
	30 – 26
90119–08829	25 – 16
90119–08836	30 – 22
90119–08840	11 – 26
	13 – 2
90119–08859	19 – 8
90119–08861	22 – 40
	22 – 41
90119–089U7	11 – 40
90119–09004	2 – 3

PART NO.	REF. NO.
90119–10004	1 – 8
90119–10067	11 – 3
90119–10804	25 – 9
90119–10808	11 – 5
90149–06190	7 – 3
90151–06024	2 – 7
90151–06815	28 – 11
90160–05003	16 – 28
90169–049U1	26 – 20
90176–08080	5 – 19
90179–08327	3 – 4
90179–20010	3 – 24
90183–06902	20 – 10
90201–04810	29 – 20
90201–06801	13 – 6
	13 – 9
90201–068G0	29 – 4
90201–06906	28 – 6
90201–10591	3 – 34
90201–109U6	25 – 8
90201–121H0	3 – 13
90201–20030	3 – 22
90201–24800	12 – 9
90201–30013	14 – 6
90208–20001	3 – 23
90215–10003	3 – 33
90267–329UR	26 – 22
90267–48806	18 – 23
	22 – 8
	24 – 4
	26 – 10
	27 – 21
	28 – 20
90267–489U1	18 – 12
	20 – 4
	20 – 13
	25 – 19
	26 – 35
	27 – 4
	27 – 6
90267–489U2	26 – 5
	30 – 21
90267–489U6	26 – 7
90267–489U8	22 – 5
	23 – 7
	23 – 18
90269–08801	21 – 5
90280–03045	3 – 11

PART NO.	REF. NO.
90387–06119	16 – 9
90387–06289	12 – 12
90387–06319	13 – 5
90387–06M05	8 – 10
90387–08M06	11 – 27
90387–08M30	13 – 3
90387–08M37	6 – 2
	6 – 15
90401–20008	7 – 16
90430–06M03	2 – 26
90430–08119	1 – 7
90430–08209	7 – 24
	34 – 10
90430–12002	11 – 37
90445–14025	11 – 21
90445–16019	10 – 15
90445–16020	10 – 18
90445–18012	10 – 9
90445–18018	10 – 25
90445–18020	8 – 22
90445–18M06	7 – 19
90445–21015	10 – 13
90446–24M44	10 – 16
90446–24M89	10 – 5
90446–24MF4	8 – 23
90447–15005	11 – 22
90447–19004	8 – 17
90447–19014	8 – 28
	10 – 10
90450–90002	6 – 5
90450–99804	27 – 9
90450–99808	9 – 11
90450–99810	9 – 12
90464–10008	18 – 26
90464–20005	17 – 19
90464–32801	18 – 20
	18 – 24
	18 – 28
	26 – 11
	27 – 22
	28 – 19
90464–35132	8 – 30
	10 – 12
	17 – 5
90464–99804	24 – 5
90465–11829	11 – 23
	22 – 6
	26 – 29

PART NO.	REF. NO.
90465–11829	26 – 30
	26 – 32
	28 – 17
90465–13M18	6 – 6
90465–13M39	17 – 6
90467–110A1	8 – 26
90467–150A1	10 – 17
90467–150A5	10 – 4
	27 – 25
90467–160A0	10 – 11
	10 – 20
	10 – 22
	10 – 24
	10 – 26
90467–170A4	8 – 19
	8 – 24
	8 – 29
90467–170A5	7 – 21
90467–180A5	22 – 15
90467–200A3	8 – 18
	10 – 14
	10 – 33
	10 – 35
90467–240A0	10 – 34
90467–240A3	10 – 36
90480–06M46	8 – 8
90480–22M15	6 – 1
	6 – 14
90601–118UF	11 – 20
	22 – 3
90601–155U4	12 – 18
	26 – 25
	26 – 26
90601–179U8	27 – 8
	27 – 13
90601–200U2	18 – 25
	18 – 27
	22 – 9
	27 – 23
91314–06065	1 – 17
91317–06014	14 – 11
91317–06035	14 – 9
91380–04030	29 – 6
	29 – 19
91380–06016	17 – 13
91380–06020	8 – 11
92990–06100	15 – 10
92990–10600	17 – 8

PART NO.	REF. NO.
92990–12200	11 – 38
	22 – 23
9299R–05200	22 – 35
	23 – 8
	23 – 17
93101–25M50	11 – 12
	34 – 22
93101–25M55	12 – 4
	34 – 18
93101–25M56	12 – 7
	34 – 19
93101–40001	3 – 18
	34 – 4
93101–40002	3 – 19
	34 – 5
93102–25M34	11 – 11
	34 – 21
93210–17010	2 – 16
	34 – 14
93210–19123	1 – 13
93210–19522	8 – 4
93210–24M79	8 – 15
93210–32172	17 – 15
93210–44003	11 – 14
	34 – 23
93306–00702	3 – 15
93306–205XG	12 – 6
93306–255X7	11 – 9
93306–30323	2 – 5
93306–90901	3 – 16
93310–42239	3 – 29
93450–19095	3 – 10
93450–32152	2 – 9
93606–12019	9 – 3
	19 – 7
93606–19M23	8 – 6
94580–25060	7 – 15
94591–57140	4 – 14
94702–00409	16 – 1
95024–08030	9 – 10
95380–06600	13 – 7
	13 – 10
95380–06700	15 – 9
9538R–06700	28 – 7
95612–08625	5 – 18
95720–06300	30 – 10
95720–08300	30 – 13
9572R–05300	22 – 36

PART NO.	REF. NO.
9572R–06300	26 – 15
9572R–08300	21 – 14
	22 – 17
	25 – 23
95812–06012	4 – 22
95812–08070	2 – 4
95814–06020	5 – 10
	8 – 12
	16 – 11
95814–06035	8 – 7
95814–06045	2 – 15
95814–06055	2 – 13
	8 – 13
95814–06085	2 – 14
95814–08020	7 – 23
95880–06016	16 – 5
95E34–06012	2 – 30
95E34–06016	9 – 9
95E34–06020	7 – 22
95E34–08012	1 – 6
97012–10025	3 – 32
97513–05514	14 – 12
97513–08514	18 – 30
97513–08530	15 – 8
97513–08535	5 – 17
97513–08555	2 – 21
97702–50520	5 – 15
97780–60520	17 – 4
97880–03008	29 – 11
97880–05025	29 – 14
9788R–05025	22 – 34
97E95–06520	17 – 10
97E95–06612	16 – 18
97E95–08540	2 – 27
99009–52500	12 – 5
99530–08016	7 – 11
99530–10014	2 – 10
99530–10114	2 – 11
99590–08012	2 – 20
99590–14016	11 – 2
99780–12600	22 – 22

PART NO.	REF. NO.