YAMAHA

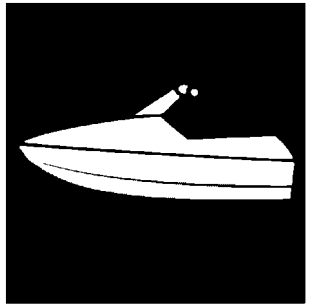

# PARTS CATALOGUE

# *WaveRunner EX Sport*
# EX1050B-A ( F6N3 /6GAS/6GA2 )

YAMAHA
GENUINE
Parts & Accessories

1ZF6N-100E5

( )

EX1050B-A
PARTS CATALOGUE
©2024 by Yamaha Motor Co., Ltd.
1st edition, April 2024
All rights reserved.
Any reprinting or unauthorized use
without the written permission of
Yamaha Motor Co., Ltd.
is expressly prohibited.
Printed in Japan.

# FOREWORD

This Parts Catalogue is related to the parts for the model(s) on the cover page. When you are ordering replacement parts, please refer to this Parts Catalogue and quote both part numbers and part names correctly.

1. Modifications or additions which have been made after the issue of the Parts Catalogue will be announced in the Parts News.
   It is advisable that you make the necessary corrections to the Parts Catalogue according to the Parts News.

2. Abbreviations
   The following abbreviations are used in this Parts Catalogue.

   “UR” Use specified parts number.

   “UN” Use as many as needed.

   “AP” Alternate Parts

   “LM” Locally Made (Parts need to be ordered locally)

   “F#” Frame No. (Applicable machine No.)

   “O/S” Over Size

3. The number of components for assembly
   - Parts, which are to be supplied in an assembly, are listed with a dot (.) in front of the part name as shown below.
   - The numeral appearing to the right of each component part indicates the quantity of parts for each assembly unit.

| PART NO. | DESCRIPTION | Q’TY | REMARKS |
|---|---|---|---|
| 2F5–83310–60 | FRONT FLASHER LIGHT ASSY | 2 | |
| 115–83311–60 | .BULB (6V–18W) | 1 | |

4. Applicable colours of graphics are represented in the “REMARKS” as shown below.

| PART NO. | DESCRIPTION | Q’TY | REMARKS |
|---|---|---|---|
| 2N4–24110–00–X5 | FUEL TANK COMP. | 2 | MXR |
| 3J1–24240–10 | .GRAPHIC, FUEL TANK | 1 | FOR MXR |

5. Note that the illustrations for reference in finding parts numbers are not to be used for assembling. When assembling, please use the applicable service manual.

6. The asterisk (*) before a reference number indicates modified items after the first edition.

7. Applicable Serial No.

Engine Serial No.

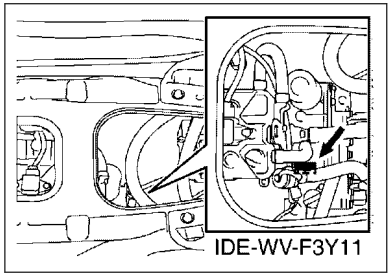


Primary Identification No.

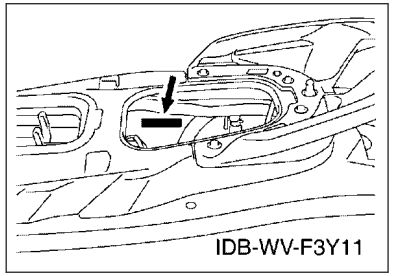


8. Applicable Colour Code (The (*) mark shows Model colour.)

| Abbreviation | Colour Name | Colour Code |
|---|---|---|
| LBS2(*) | LIGHT BLUE SOLID 2 | 1857 |
| SSA(*) | BLACK SOLID A | 1000 |
| | | |
| | | |
| | | |
| | | |
| | | |
| | | |
| | | |
| | | |

9. Quantity Column Information

| Column No. | Name Of Q'ty Column | Destination |
|---|---|---|
| 1 | F6N3 | CANADA, EUROPE |
| | | |
| | | |
| | | |
| | | |

10. Applicable Starting Serial No.

Engine Serial No.

| Serial No. | Name Of Q'ty Column | Model Code |
|---|---|---|
| | | |
| | | |
| | | |
| | | |
| | | |

Primary Identification No.

| Serial No. | Name Of Q'ty Column | Model Code |
|---|---|---|
| F6N-800101 | F6N3 | F6N3 |
| | | |
| | | |
| | | |
| | | |

# CONTENTS

CYLINDER.....1
CRANKCASE..... 2
CRANKSHAFT & PISTON.....4
VALVE..... 6
INTAKE.....8
INTAKE 2.....9
OIL PUMP.....10
OIL COOLER.....11
EXHAUST 1.....13
EXHAUST 2.....14
JET UNIT 1.....16
JET UNIT 2.....18
JET UNIT 3.....19
GENERATOR.....20
STARTING MOTOR..... 21
ELECTRICAL 1.....22
ELECTRICAL 2.....24
ELECTRICAL 3.....25
ENGINE MOUNT.....27
ENGINE HATCH 1.....28
ENGINE HATCH 2.....29
HULL & DECK..... 30
GUNWALE & MAT.....32
VENTILATION..... 34
SEAT & UNDER LOCKER..... 35
FUEL TANK.....36
EXHAUST 3.....38
CONTROL CABLE..... 39
STEERING 1..... 40
STEERING 2..... 41
STEERING 3..... 42
GRAPHICS.....43
IMPORTANT LABELS.....44
REPAIR KIT 1.....45

## INDEX

NUMERICAL INDEX.....46

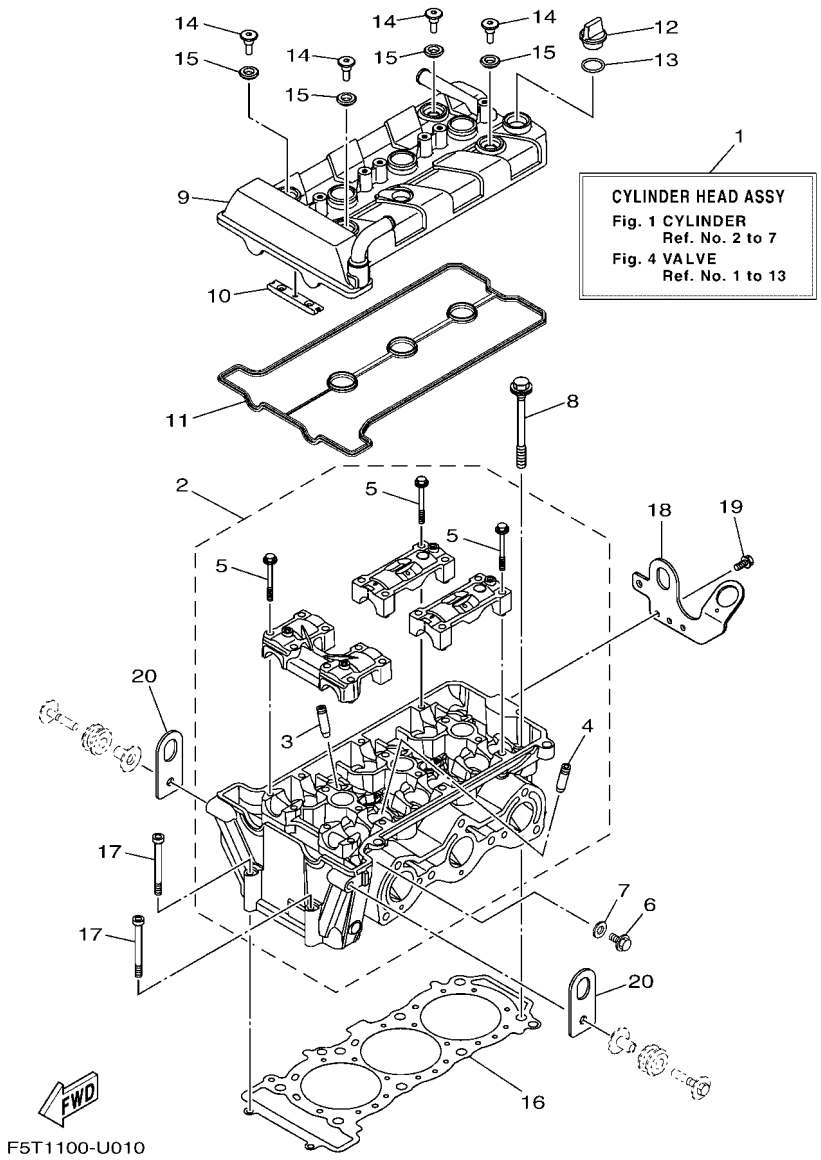


## FIG. 1 CYLINDER

| REF. NO. | PART NO. | DESCRIPTION | F6N3 | | | | | REMARKS |
|---|---|---|---|---|---|---|---|---|
| 1 | 6EY–11110–00 | CYLINDER HEAD COMPLETE | 1 | | | | | |
| 2 | 6EY–11102–00 | CYLINDER HEAD ASSY | 1 | | | | | |
| 3 | 2C0–11133–11 | .GUIDE, VALVE 1 | 6 | | | | | |
| 4 | 8HF–11134–10 | .GUIDE, VALVE 2 | 6 | | | | | |
| 5 | 90105–06027 | .BOLT, FLANGE | 16 | | | | | |
| 6 | 95E34–08012 | BOLT, FLANGE DEEP RECESS | 1 | | | | | |
| 7 | 90430–08119 | GASKET | 1 | | | | | |
| 8 | 90119–10004 | BOLT, WITH WASHER | 8 | | | | | |
| 9 | 6EY–11191–10 | COVER, CYLINDER HEAD 1 | 1 | | | | | |
| 10 | 5BE–12241–01 | GUIDE, STOPPER 2 | 1 | | | | | |
| 11 | 6EY–11193–00 | GASKET, HEAD COVER 1 | 1 | | | | | |
| 12 | 3Y1–15363–10 | PLUG, OIL | 1 | | | | | |
| 13 | 93210–19123 | O-RING | 1 | | | | | |
| 14 | 90109–066F0 | BOLT | 4 | | | | | |
| 15 | 5VY–1111G–00 | RUBBER, MOUNT 1 | 4 | | | | | |
| 16 | 6EY–11181–00 | GASKET, CYLINDER HEAD 1 | 1 | | | | | |
| 17 | 91314–06065 | BOLT, HEXAGON SOCKET HEAD | 2 | | | | | |
| 18 | 6EY–1111E–10 | HANGER, ENGINE 2 | 1 | | | | | |
| 19 | 90119–06078 | BOLT, WITH WASHER | 2 | | | | | |
| 20 | 6EY–11119–00 | HANGER, ENGINE | 2 | | | | | |

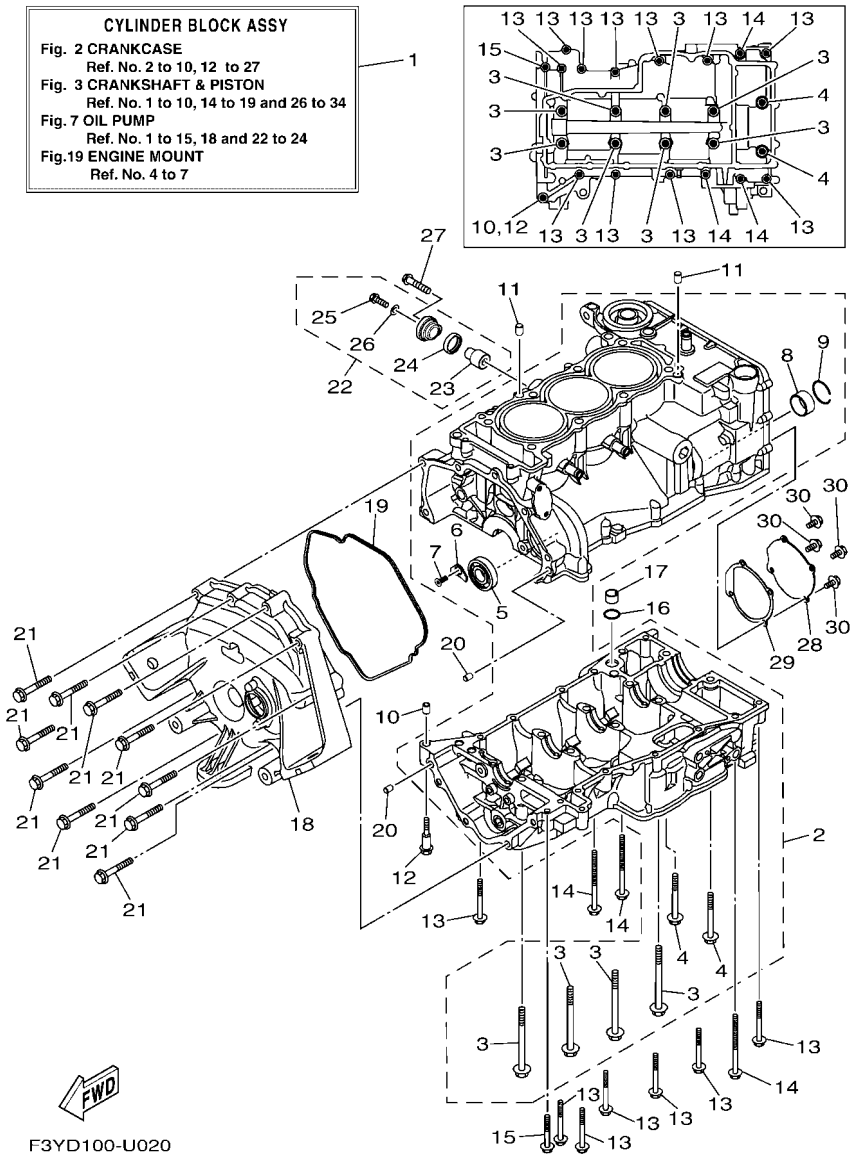


## FIG. 2 CRANKCASE

| REF. NO. | PART NO. | DESCRIPTION | F6N3 | | | | | REMARKS |
|---|---|---|---|---|---|---|---|---|
| 1 | 6GA–W009B–00 | CYLINDER BLOCK ASSY | 1 | | | | | |
| 2 | 6EY–15109–09 | CRANKCASE ASSY | 1 | | | | | |
| 3 | 90119–09004 | .BOLT, WITH WASHER | 8 | | | | | |
| 4 | 95812–08070 | .BOLT, FLANGE | 2 | | | | | |
| 5 | 93306–30323 | .BEARING | 1 | | | | | |
| 6 | 4JT–15381–01 | .PLATE, BEARING COVER | 1 | | | | | |
| 7 | 90151–06024 | .SCREW, COUNTERSUNK | 1 | | | | | |
| 8 | 8ES–11428–01 | .BEARING 1 | 1 | | | | | |
| 9 | 93450–32152 | .CIRCLIP | 1 | | | | | |
| 10 | 99530–10014 | PIN, DOWEL | 1 | | | | | |
| 11 | 99530–10114 | PIN, DOWEL | 2 | | | | | |
| 12 | 90109–06308 | BOLT | 1 | | | | | |
| 13 | 95814–06055 | BOLT, FLANGE | 11 | | | | | |
| 14 | 95814–06085 | BOLT, FLANGE | 3 | | | | | |
| 15 | 95814–06045 | BOLT, FLANGE | 1 | | | | | |
| 16 | 93210–17010 | O-RING | 1 | | | | | |
| 17 | 8ES–13284–00 | PIPE | 1 | | | | | |
| 18 | 6EY–15421–00 | COVER, CRANKCASE 2 | 1 | | | | | |
| 19 | 6EY–15461–00 | GASKET, CRANKCASE COVER 2 | 1 | | | | | |
| 20 | 99590–08012 | PIN, DOWEL | 2 | | | | | |
| 21 | 97513–08555 | BOLT, WITH WASHER | 10 | | | | | |
| 22 | 69J–11301–11 | ANODE COVER ASSY | 1 | | | | | |
| 23 | 68V–11325–02 | .ANODE | 1 | | | | | |
| 24 | 67F–11328–01 | .GROMMET, ANODE | 1 | | | | | |
| 25 | 90105–06M07 | .BOLT, FLANGE | 1 | | | | | |
| 26 | 90430–06M03 | .GASKET | 1 | | | | | |
| 27 | 97E95–08540 | BOLT, HEXAGON W/W DEEP RECESS | 1 | | | | | |

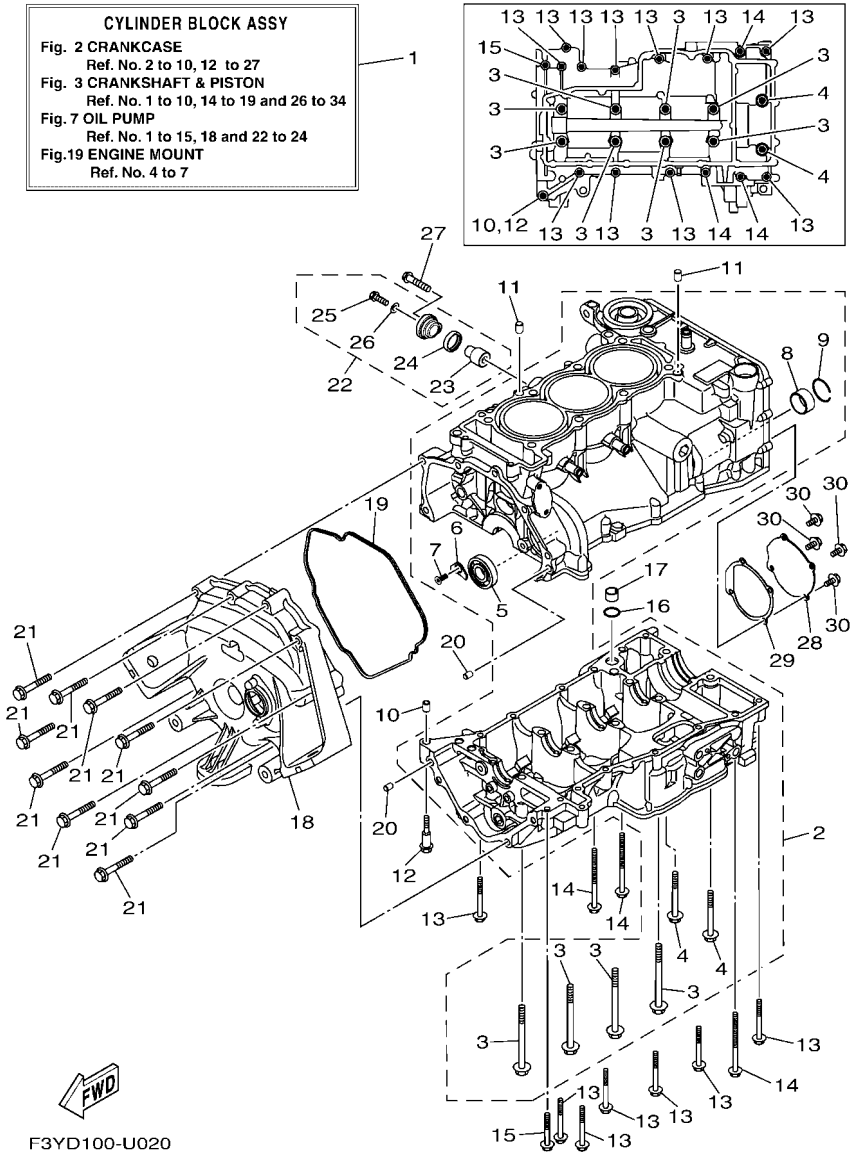


## FIG. 2 CRANKCASE

| REF. NO. | PART NO. | DESCRIPTION | F6N3 | | | | | REMARKS |
|---|---|---|---|---|---|---|---|---|
| 28 | 6EY–15589–01 | PLATE | 1 | | | | | |
| 29 | 6EY–15463–01 | GASKET, 2 | 1 | | | | | |
| 30 | 95E34–06012 | BOLT, FLANGE DEEP RECESS | 4 | | | | | |

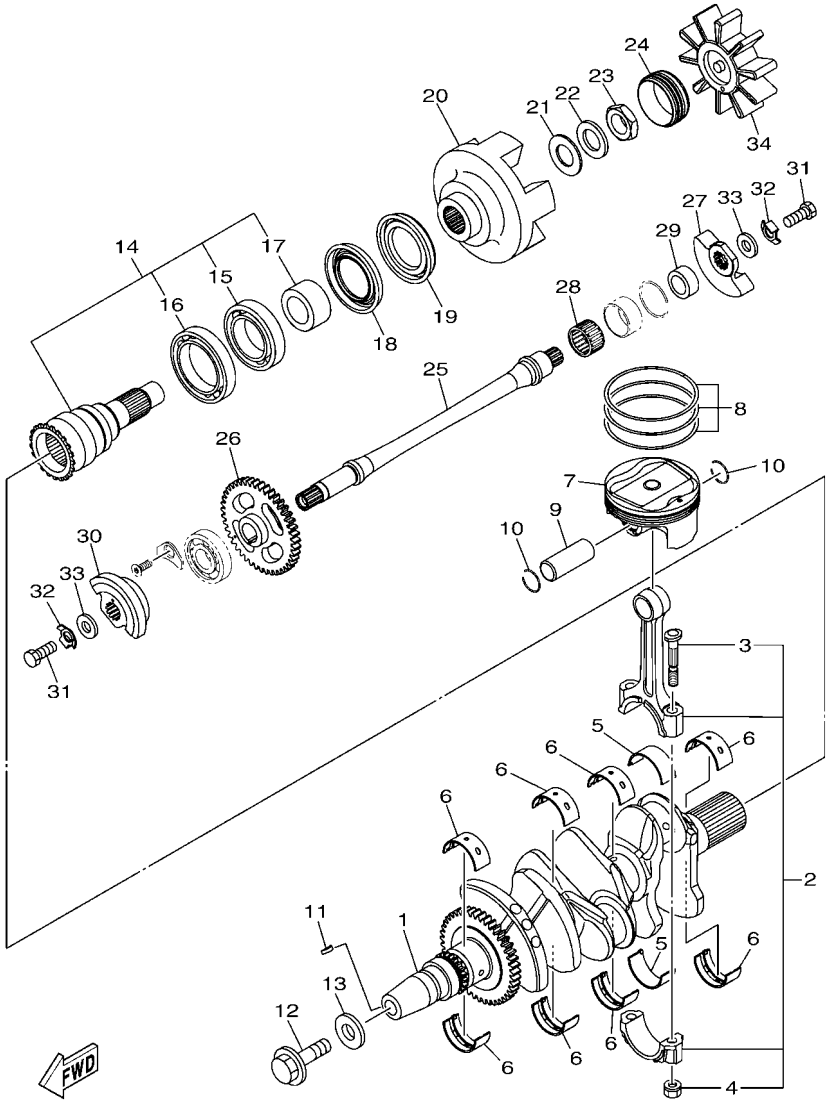


F3YU100-Y030

## FIG. 3 CRANKSHAFT & PISTON

| REF. NO. | PART NO. | DESCRIPTION | F6N3 | | | | | REMARKS |
|---|---|---|---|---|---|---|---|---|
| 1 | 6EY–11400–00 | CRANKSHAFT ASSY | 1 | | | | | |
| 2 | B0F–11650–00 | CONNECTING ROD ASSY | 3 | | | | | |
| 3 | 5JW–11654–00 | .BOLT, CONNECTING ROD | 2 | | | | | |
| 4 | 90179–08327 | .NUT | 2 | | | | | |
| 5 | 5JW–11656–00 | PLANE BEARING, CONNECTING ROD | 6 | | | | | UR BLUE |
| | 5JW–11656–10 | PLANE BEARING, CONNECTING ROD | 6 | | | | | UR BLACK |
| | 5JW–11656–20 | PLANE BEARING, CONNECTING ROD | 6 | | | | | UR BROWN |
| | 5JW–11656–30 | PLANE BEARING, CONNECTING ROD | 6 | | | | | UR GREEN |
| | 5JW–11656–40 | PLANE BEARING, CONNECTING ROD | 6 | | | | | UR YELLOW |
| | 5JW–11656–50 | PLANE BEARING, CONNECTING ROD | 6 | | | | | UR PINK |
| 6 | 3LD–11416–10 | PLANE BEARING, CRANKSHAFT 1 | 8 | | | | | UR BLACK |
| | 3LD–11416–20 | PLANE BEARING, CRANKSHAFT 1 | 8 | | | | | UR BROWN |
| | 3LD–11416–30 | PLANE BEARING, CRANKSHAFT 1 | 8 | | | | | UR GREEN |
| | 3LD–11416–40 | PLANE BEARING, CRANKSHAFT 1 | 8 | | | | | UR YELLOW |
| | 3LD–11416–50 | PLANE BEARING, CRANKSHAFT 1 | 8 | | | | | UR PINK |
| | 3LD–11416–60 | PLANE BEARING, CRANKSHAFT 1 | 8 | | | | | UR RED |
| | 3LD–11416–70 | PLANE BEARING, CRANKSHAFT 1 | 8 | | | | | UR WHITE |
| 7 | 8KH–11631–00 | PISTON (STD) | 3 | | | | | |
| 8 | 8KH–11603–02 | PISTON RING SET (STD) | 3 | | | | | |
| 9 | 6EY–11633–00 | PIN, PISTON | 3 | | | | | |
| 10 | 93450–19095 | CIRCLIP | 6 | | | | | |
| 11 | 90280–03045 | KEY, WOODRUFF | 1 | | | | | |
| 12 | 90105–12101 | BOLT, FLANGE | 1 | | | | | |
| 13 | 90201–121H0 | WASHER, PLATE | 1 | | | | | |
| 14 | 6EY–11406–10 | SHAFT ASSY | 1 | | | | | |
| 15 | 93306–00702 | .BEARING | 1 | | | | | |
| 16 | 93306–90901 | .BEARING | 1 | | | | | |

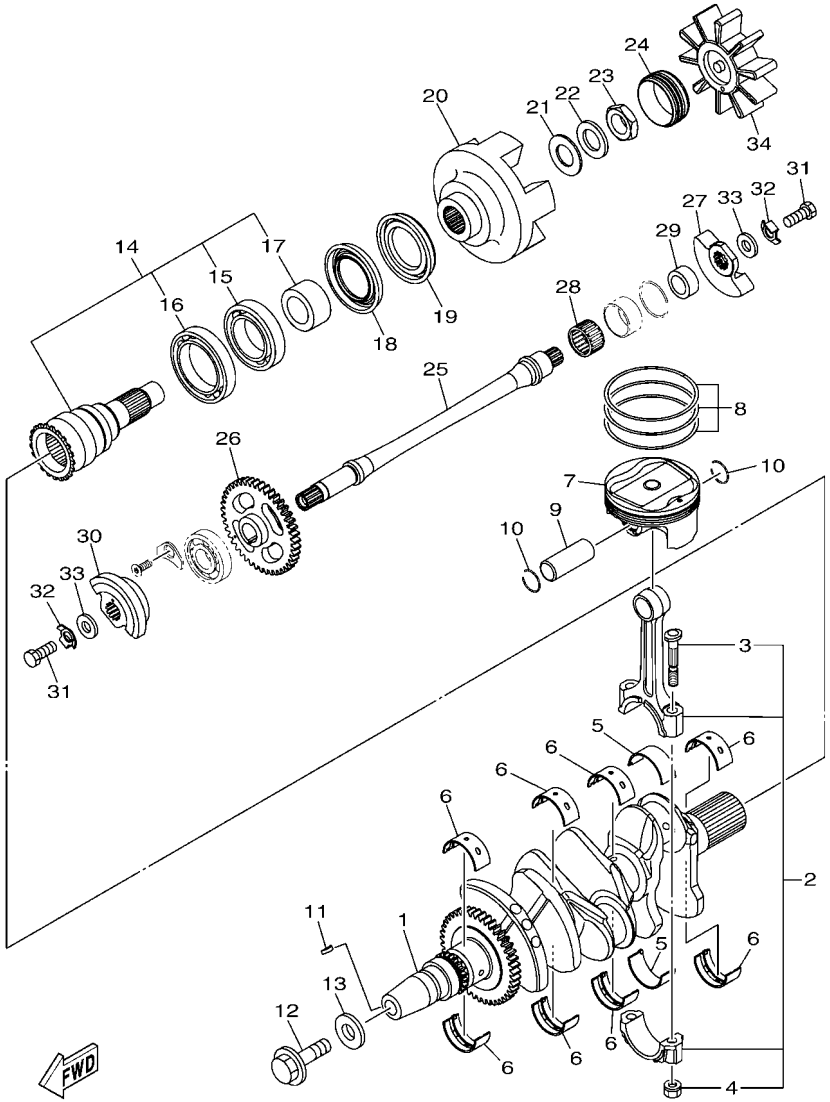


F3YU100-Y030

## FIG. 3 CRANKSHAFT & PISTON

| REF. NO. | PART NO. | DESCRIPTION | F6N3 | | | | | REMARKS |
|---|---|---|---|---|---|---|---|---|
| 17 | 6EY–11917–10 | .COLLAR | 1 | | | | | |
| 18 | 93101–40001 | OIL SEAL | 1 | | | | | |
| 19 | 93101–40002 | OIL SEAL | 1 | | | | | |
| 20 | 6JF–11571–00 | FLYWHEEL | 1 | | | | | |
| 21 | 90201–20030 | WASHER, PLATE | 1 | | | | | |
| 22 | 90208–20001 | WASHER, CONICAL SPRING | 1 | | | | | |
| 23 | 90179–20010 | NUT | 1 | | | | | |
| 24 | 6EY–45155–00 | CAP | 1 | | | | | |
| 25 | 2HC–11407–00 | SHAFT ASSY., 2 | 1 | | | | | |
| 26 | 6EY–11531–00 | GEAR, BALANCE WEIGHT | 1 | | | | | |
| 27 | 8ES–11454–00 | WEIGHT 1 | 1 | | | | | |
| 28 | 93310–42239 | BEARING | 1 | | | | | |
| 29 | 6EY–11478–00 | COLLAR | 1 | | | | | |
| 30 | 2HC–11464–00 | WEIGHT 2 | 1 | | | | | |
| 31 | 97012–10025 | BOLT | 2 | | | | | |
| 32 | 90215–10003 | WASHER, LOCK | 2 | | | | | |
| 33 | 90201–10591 | WASHER, PLATE | 2 | | | | | |
| 34 | 6EY–4581J–00 | RUBBER SHAFT COUPLING | 1 | | | | | |

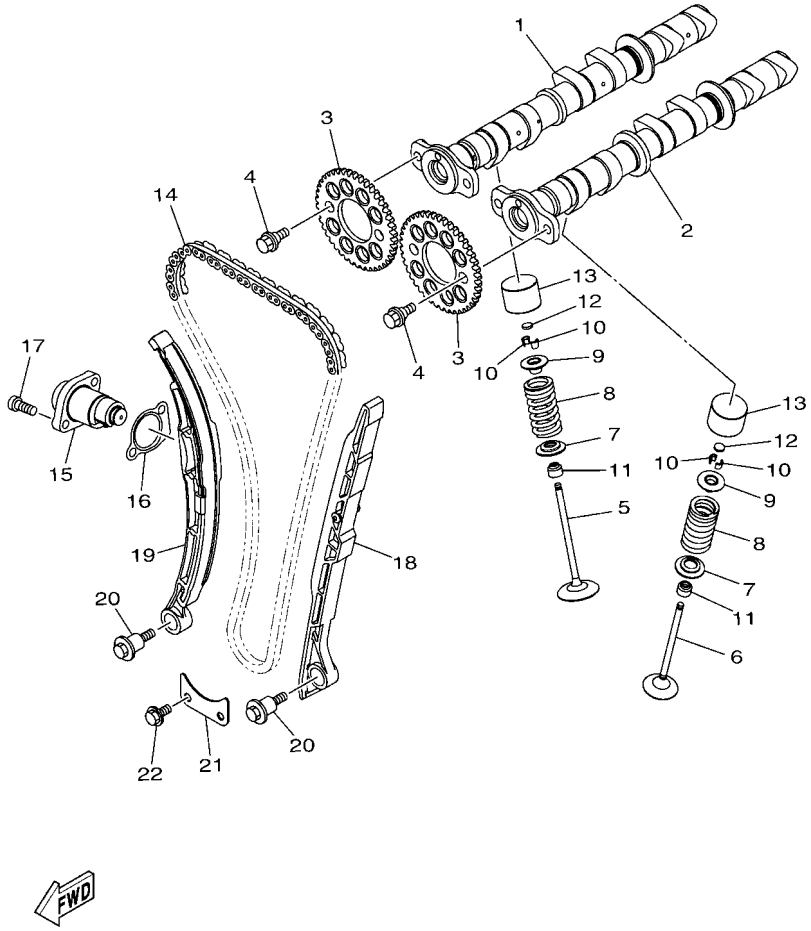


F4G1100-R040

## FIG. 4 VALVE

| REF. NO. | PART NO. | DESCRIPTION | F6N3 | | | | | REMARKS |
|---|---|---|---|---|---|---|---|---|
| 1 | 6EY–12170–00 | CAMSHAFT ASSY 1 | 1 | | | | | |
| 2 | 6EY–12180–00 | CAMSHAFT ASSY 2 | 1 | | | | | |
| 3 | 2HC–12176–00 | SPROCKET, CAM CHAIN | 2 | | | | | |
| 4 | 90105–07004 | BOLT, FLANGE | 4 | | | | | |
| 5 | 8GL–12111–10 | VALVE, INTAKE | 6 | | | | | |
| 6 | 8GL–12121–10 | VALVE, EXHAUST | 6 | | | | | |
| 7 | 1RC–12116–00 | SEAT, VALVE SPRING | 12 | | | | | |
| 8 | 8GL–12113–00 | SPRING, VALVE INNER | 12 | | | | | |
| 9 | 3D7–12117–00 | RETAINER, VALVE SPRING | 12 | | | | | |
| 10 | 1WG–12118–00 | LOCK, VALVE SPRING RETAINER | 24 | | | | | |
| 11 | 2HC–12119–00 | SEAL, VALVE STEM | 12 | | | | | |
| 12 | 1HX–12168–00 | PAD, ADJUSTING 2 (1.20) | 12 | | | | | UR |
| | 1HX–12168–20 | PAD, ADJUSTING 2 (1.25) | 12 | | | | | UR |
| | 1HX–12168–40 | PAD, ADJUSTING 2 (1.30) | 12 | | | | | UR |
| | 1HX–12168–60 | PAD, ADJUSTING 2 (1.35) | 12 | | | | | UR |
| | 1HX–12168–80 | PAD, ADJUSTING 2 (1.40) | 12 | | | | | UR |
| | 1HX–12168–A0 | PAD, ADJUSTING 2 (1.45) | 12 | | | | | UR |
| | 1HX–12168–F0 | PAD, ADJUSTING 2 (1.50) | 12 | | | | | UR |
| | 1HX–12168–H1 | PAD, ADJUSTING 2 (1.55) | 12 | | | | | UR |
| | 1HX–12168–K1 | PAD, ADJUSTING 2 (1.60) | 12 | | | | | UR |
| | 1HX–12168–M1 | PAD, ADJUSTING 2 (1.65) | 12 | | | | | UR |
| | 1HX–12168–R1 | PAD, ADJUSTING 2 (1.70) | 12 | | | | | UR |
| | 1HX–12168–U1 | PAD, ADJUSTING 2 (1.75) | 12 | | | | | UR |
| | 1HX–12168–W1 | PAD, ADJUSTING 2 (1.80) | 12 | | | | | UR |
| | 1HX–12168–Y1 | PAD, ADJUSTING 2 (1.85) | 12 | | | | | UR |
| | 1HX–12169–11 | PAD, ADJUSTING 2 (1.90) | 12 | | | | | UR |
| | 1HX–12169–31 | PAD, ADJUSTING 2 (1.95) | 12 | | | | | UR |

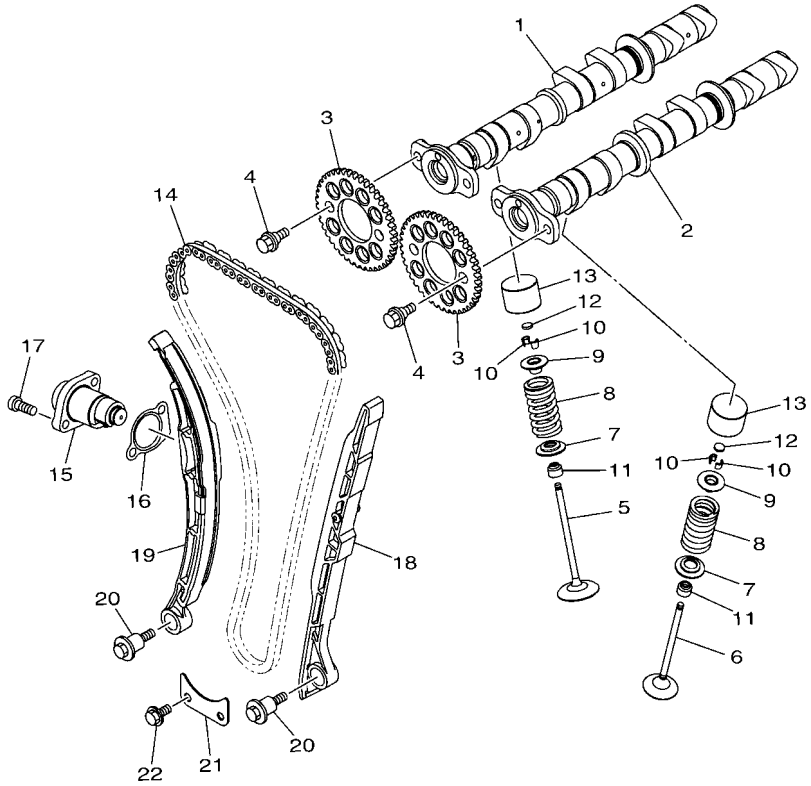


F4G1100-R040

## FIG. 4 VALVE

| REF. NO. | PART NO. | DESCRIPTION | F6N3 | | | | | REMARKS |
|---|---|---|---|---|---|---|---|---|
| 12 | 1HX–12169–50 | PAD, ADJUSTING 2 (2.00) | 12 | | | | | UR |
| | 1HX–12169–70 | PAD, ADJUSTING 2 (2.05) | 12 | | | | | UR |
| | 1HX–12169–90 | PAD, ADJUSTING 2 (2.10) | 12 | | | | | UR |
| | 1HX–12169–E0 | PAD, ADJUSTING 2 (2.15) | 12 | | | | | UR |
| | 1HX–12169–G0 | PAD, ADJUSTING 2 (2.20) | 12 | | | | | UR |
| | 1HX–12169–J0 | PAD, ADJUSTING 2 (2.25) | 12 | | | | | UR |
| | 1HX–12169–L0 | PAD, ADJUSTING 2 (2.30) | 12 | | | | | UR |
| | 1HX–12169–N0 | PAD, ADJUSTING 2 (2.35) | 12 | | | | | UR |
| | 1HX–12169–T0 | PAD, ADJUSTING 2 (2.40) | 12 | | | | | UR |
| 13 | 6EY–12153–01 | LIFTER, VALVE | 12 | | | | | |
| 14 | 94591–57140 | CHAIN (98RH2010-140M) | 1 | | | | | |
| 15 | 8KH–12210–00 | TENSIONER ASSY, CAM CHAIN | 1 | | | | | |
| 16 | 2C0–12213–00 | GASKET, TENSIONER CASE | 1 | | | | | |
| 17 | 90110–06274 | BOLT, HEXAGON SOCKET HEAD | 2 | | | | | |
| 18 | 6EY–12251–00 | DAMPER, CHAIN 1 | 1 | | | | | |
| 19 | 2HC–12252–00 | DAMPER, CHAIN 2 | 1 | | | | | |
| 20 | 90109–06295 | BOLT | 2 | | | | | |
| 21 | 6EY–12279–00 | PLATE | 1 | | | | | |
| 22 | 95812–06012 | BOLT, FLANGE | 2 | | | | | |

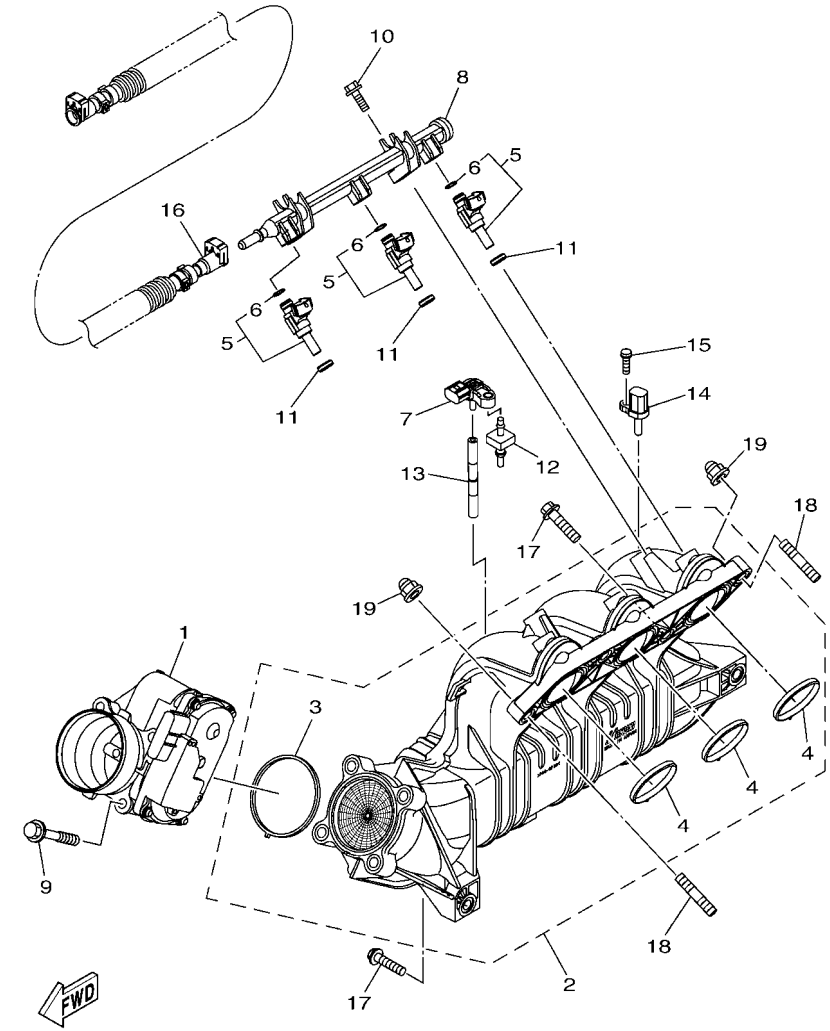


F3Y7100-T050

## FIG. 5 INTAKE

| REF. NO. | PART NO. | DESCRIPTION | F6N3 | | | | | REMARKS |
|---|---|---|---|---|---|---|---|---|
| 1 | 6EY–13750–00 | THROTTLE BODY ASSY | 1 | | | | | |
| 2 | 6EY–13641–03 | MANIFOLD, INTAKE 1 | 1 | | | | | |
| 3 | 6EY–14156–00 | .GASKET, INSULATING | 1 | | | | | |
| 4 | 6EY–14126–00 | .GASKET | 3 | | | | | |
| 5 | 2HC–13761–00 | INJECTOR | 3 | | | | | |
| 6 | 68V–1416A–00 | .O-RING | 1 | | | | | |
| 7 | 5S7–82380–00 | SENSOR, PRESSURE | 1 | | | | | |
| 8 | 6EY–12880–01 | DELIVERY PIPE | 1 | | | | | |
| 9 | 90105–08243 | BOLT, FLANGE | 4 | | | | | |
| 10 | 95814–06020 | BOLT, FLANGE | 2 | | | | | |
| 11 | 8FP–13556–10 | GASKET, MANIFOLD | 3 | | | | | |
| 12 | 6BH–14445–00 | GROMMET | 1 | | | | | |
| 13 | 6EY–13532–00 | HOSE, VACUUM SENSING 3 | 1 | | | | | |
| 14 | 8FP–85886–00 | SENSOR, AIR TEMPERATURE | 1 | | | | | |
| 15 | 97702–50520 | SCREW, TAPPING | 1 | | | | | |
| 16 | 6CN–2450B–10 | FUEL HOSE ASSY | 1 | | | | | |
| 17 | 97513–08535 | BOLT, WITH WASHER | 4 | | | | | |
| 18 | 95612–08625 | BOLT, STUD | 2 | | | | | |
| 19 | 90176–08080 | NUT, CAP | 2 | | | | | |

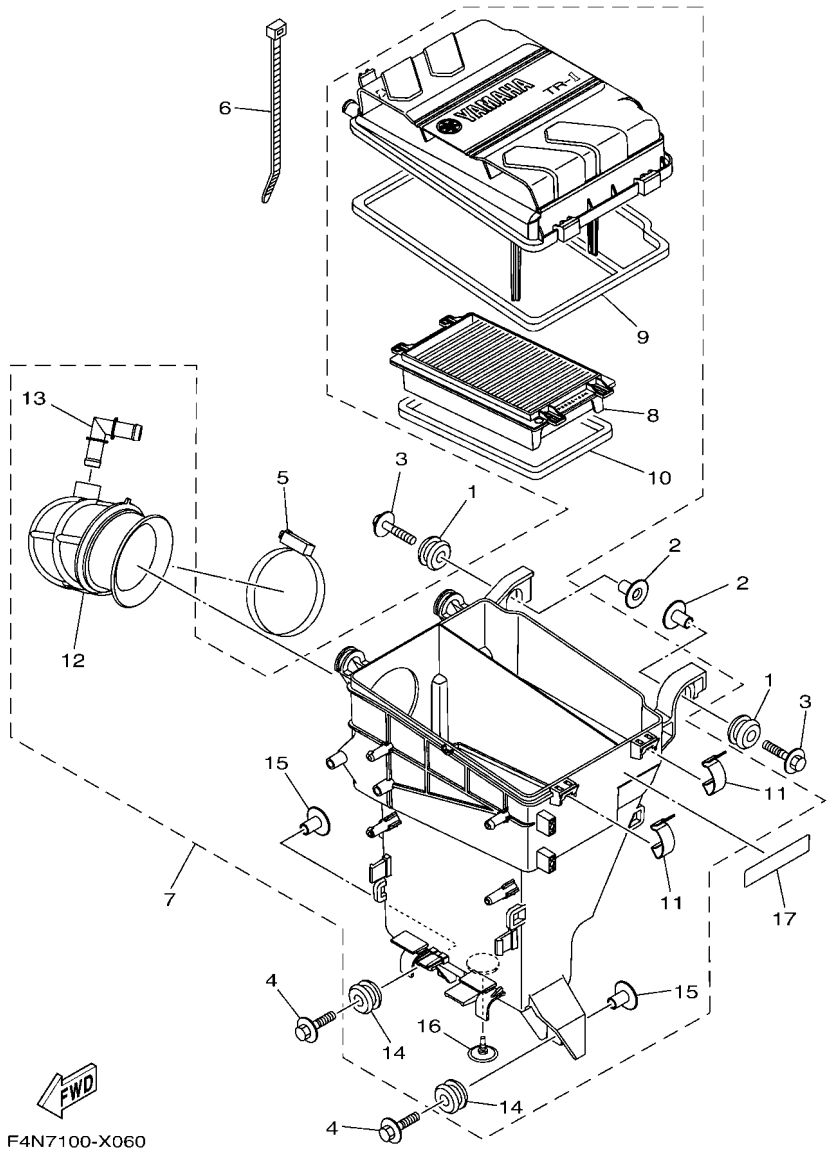


## FIG. 6 INTAKE 2

| REF. NO. | PART NO. | DESCRIPTION | F6N3 | | | | | REMARKS |
|---|---|---|---|---|---|---|---|---|
| 1 | 90480–22M15 | GROMMET | 2 | | | | | |
| 2 | 90387–08M37 | COLLAR | 2 | | | | | |
| 3 | 90119–08169 | BOLT, WITH WASHER | 2 | | | | | |
| 4 | 90119–08187 | BOLT, WITH WASHER | 2 | | | | | |
| 5 | 90450–90002 | HOSE CLAMP ASSY | 1 | | | | | |
| 6 | 90465–13M18 | CLAMP | 1 | | | | | |
| 7 | 6EY–14410–10 | AIR CLEANER ASSY. | 1 | | | | | |
| 8 | 6EY–14451–00 | .ELEMENT, AIR CLEANER | 1 | | | | | |
| 9 | 6EY–14462–00 | .SEAL | 1 | | | | | |
| 10 | 6EY–14452–00 | .SEAL | 1 | | | | | |
| 11 | 6EY–14436–00 | .HOOK | 2 | | | | | |
| 12 | 6EY–14419–00 | .PIPE | 1 | | | | | |
| 13 | 6EY–14485–00 | .PIPE, JOINT | 1 | | | | | |
| 14 | 90480–22M15 | .GROMMET | 2 | | | | | |
| 15 | 90387–08M37 | .COLLAR | 2 | | | | | |
| 16 | 6EY–14470–01 | .VALVE | 1 | | | | | |
| 17 | 60E–83627–00 | LABEL, CAUTION 7 | 1 | | | | | |

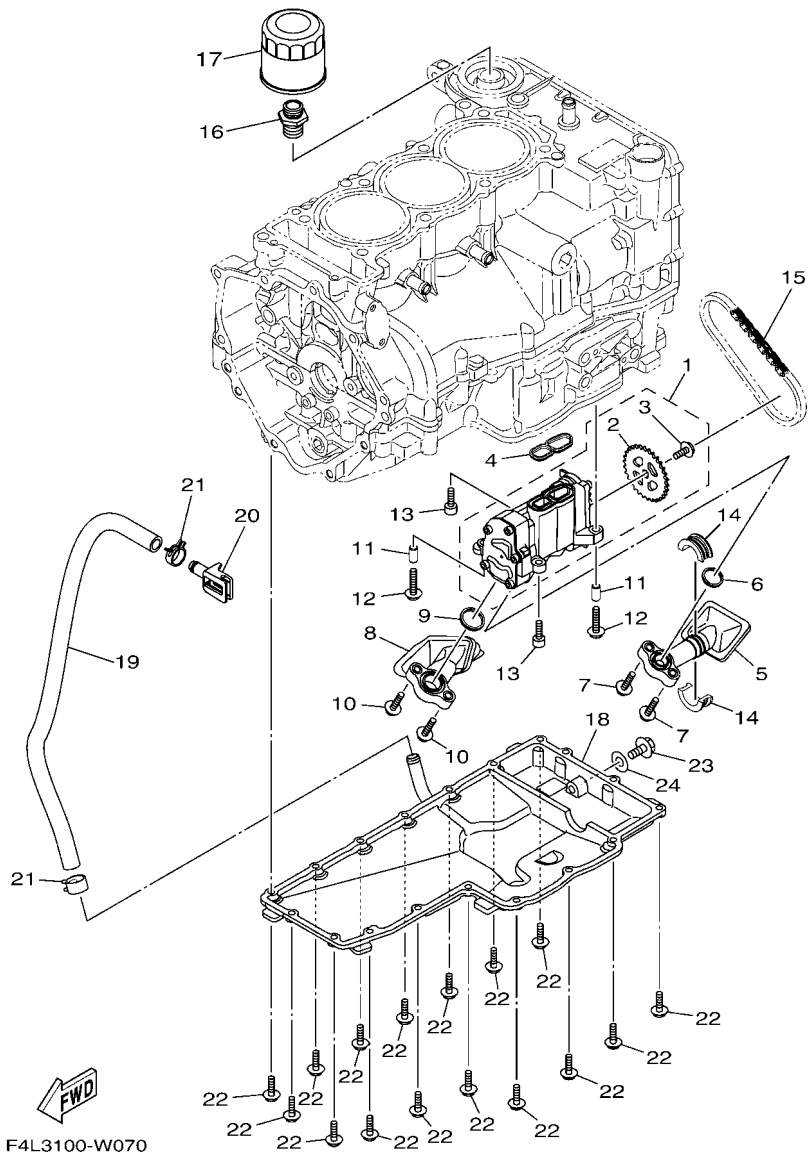


## FIG. 7 OIL PUMP

| REF. NO. | PART NO. | DESCRIPTION | F6N3 | | | | | REMARKS |
|---|---|---|---|---|---|---|---|---|
| 1 | 6EY–13300–00 | OIL PUMP ASSY | 1 | | | | | |
| 2 | 6EY–13355–00 | .SPROCKET, DRIVEN | 1 | | | | | |
| 3 | 90149–06190 | .SCREW | 1 | | | | | |
| 4 | 6EY–13563–00 | GASKET | 1 | | | | | |
| 5 | 6EY–13405–00 | OIL PIPE COMP. 1 | 1 | | | | | |
| 6 | 6EY–13477–00 | GASKET | 1 | | | | | |
| 7 | 90110–06172 | BOLT, HEXAGON SOCKET HEAD | 2 | | | | | |
| 8 | 6EY–13406–00 | OIL PIPE COMP. 2 | 1 | | | | | |
| 9 | 6EY–13476–00 | GASKET | 1 | | | | | |
| 10 | 90110–06172 | BOLT, HEXAGON SOCKET HEAD | 2 | | | | | |
| 11 | 99530–08016 | PIN, DOWEL | 2 | | | | | |
| 12 | 90110–06287 | BOLT, HEXAGON SOCKET HEAD | 2 | | | | | |
| 13 | 90110–06335 | BOLT, HEXAGON SOCKET HEAD | 2 | | | | | |
| 14 | 6EY–15486–00 | GROMMET | 2 | | | | | |
| 15 | 94580–25060 | CHAIN (DID25 60LE) | 1 | | | | | |
| 16 | 90401–20008 | BOLT, UNION | 1 | | | | | |
| 17 | 5GH–13440–80 | ELEMENT ASSY, OIL CLEANER | 1 | | | | | |
| 18 | 6EY–13417–10 | COVER, STRAINER | 1 | | | | | |
| 19 | 90445–18M06 | HOSE (L500) | 1 | | | | | |
| 20 | 6EY–13455–00 | PLUG | 1 | | | | | |
| 21 | 90467–170A5 | CLIP | 2 | | | | | |
| 22 | 95E34–06020 | BOLT, FLANGE DEEP RECESS | 18 | | | | | |
| 23 | 95814–08020 | BOLT, FLANGE | 1 | | | | | |
| 24 | 90430–08209 | GASKET | 1 | | | | | |

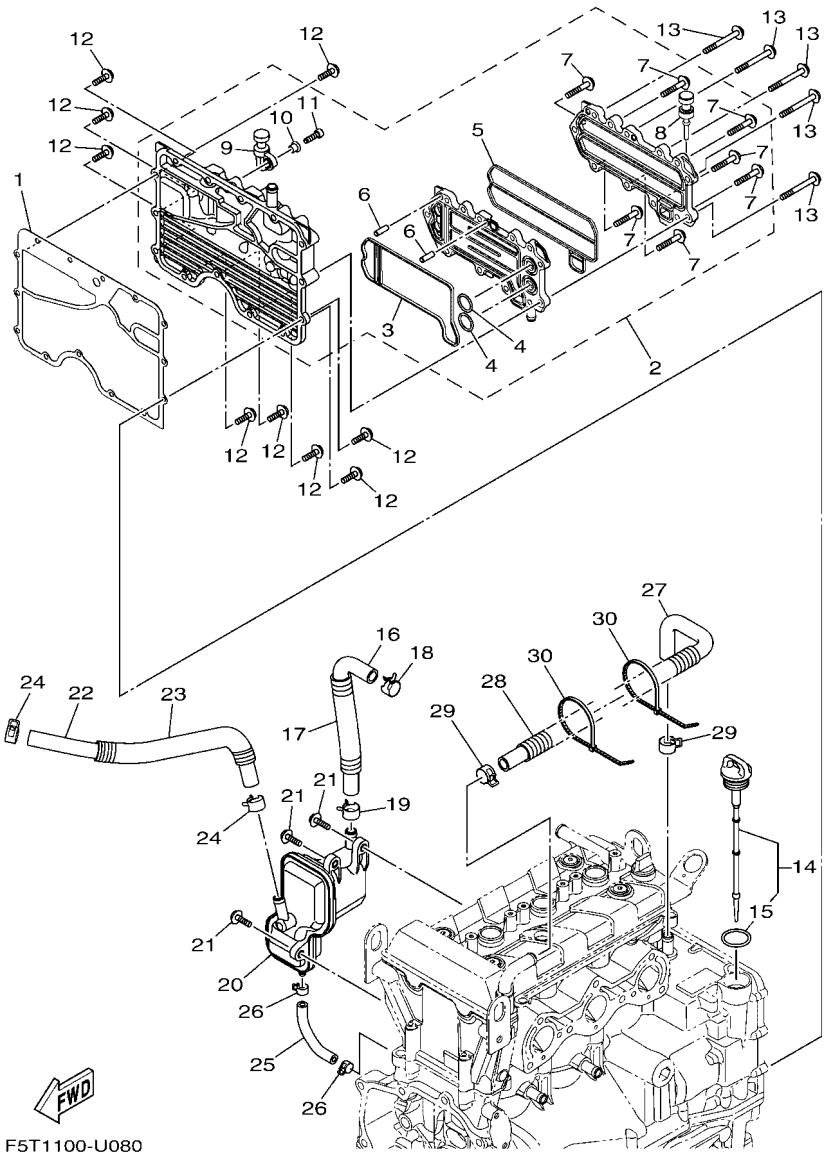


F5T1100-U080

## FIG. 8 OIL COOLER

| REF. NO. | PART NO. | DESCRIPTION | F6N3 | | | | | REMARKS |
|---|---|---|---|---|---|---|---|---|
| 1 | 6EY–15453–00 | GASKET | 1 | | | | | |
| 2 | 6EY–13470–01 | OIL COOLER ASSY | 1 | | | | | |
| 3 | 6EY–13556–00 | .GASKET, MANIFOLD | 1 | | | | | |
| 4 | 93210–19522 | .O-RING | 2 | | | | | |
| 5 | 6EY–13557–00 | .GASKET | 1 | | | | | |
| 6 | 93606–19M23 | .PIN, DOWEL | 2 | | | | | |
| 7 | 95814–06035 | .BOLT, FLANGE | 7 | | | | | |
| 8 | 90480–06M46 | .GROMMET | 1 | | | | | |
| 9 | 6S5–81364–11 | .GROMMET | 1 | | | | | |
| 10 | 90387–06M05 | .COLLAR | 1 | | | | | |
| 11 | 91380–06020 | .BOLT | 1 | | | | | |
| 12 | 95814–06020 | BOLT, FLANGE | 9 | | | | | |
| 13 | 95814–06055 | BOLT, FLANGE | 5 | | | | | |
| 14 | 6EY–15362–10 | PLUG, OIL LEVEL | 1 | | | | | |
| 15 | 93210–24M79 | .O-RING | 1 | | | | | |
| 16 | 6EY–11166–10 | PIPE, BREATHER 1 | 1 | | | | | |
| 17 | 90447–19004 | HOSE, WITH SPRING (L130) | 1 | | | | | |
| 18 | 90467–200A3 | CLIP | 1 | | | | | |
| 19 | 90467–170A4 | CLIP | 1 | | | | | |
| 20 | 6EY–11164–00 | SEPERATOR, OIL | 1 | | | | | |
| 21 | 90105–06M15 | BOLT, FLANGE | 3 | | | | | |
| 22 | 90445–18020 | HOSE (L420) | 1 | | | | | |
| 23 | 90446–24MF4 | HOSE (L350) | 1 | | | | | |
| 24 | 90467–170A4 | CLIP | 2 | | | | | |
| 25 | 6EY–11125–00 | PIPE, BREATHER 4 | 1 | | | | | |
| 26 | 90467–110A1 | CLIP | 2 | | | | | |
| 27 | 6EY–11126–10 | PIPE, BREATHER 3 | 1 | | | | | |

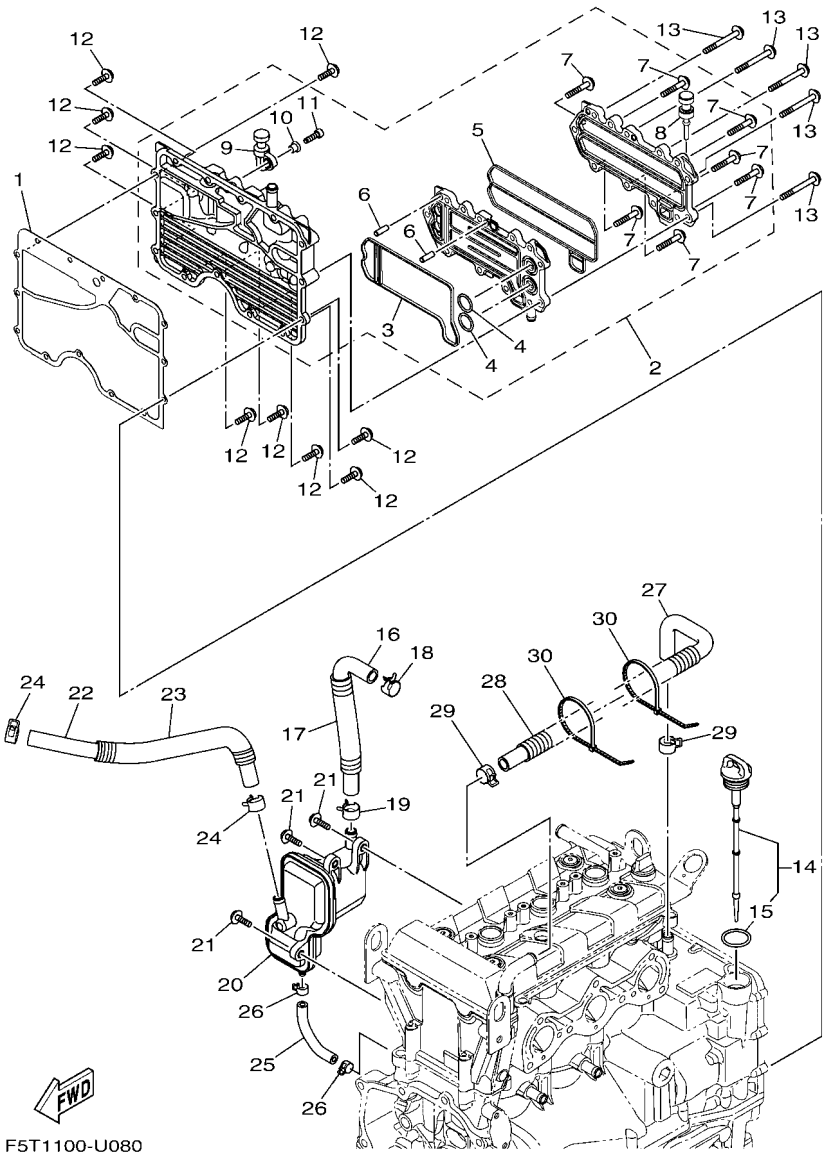


## FIG. 8 OIL COOLER

| REF. NO. | PART NO. | DESCRIPTION | F6N3 | | | | | REMARKS |
|---|---|---|---|---|---|---|---|---|
| 28 | 90447–19014 | TUBE (L300) | 1 | | | | | |
| 29 | 90467–170A4 | CLIP | 2 | | | | | |
| 30 | 90464–35132 | CLAMP | 2 | | | | | |

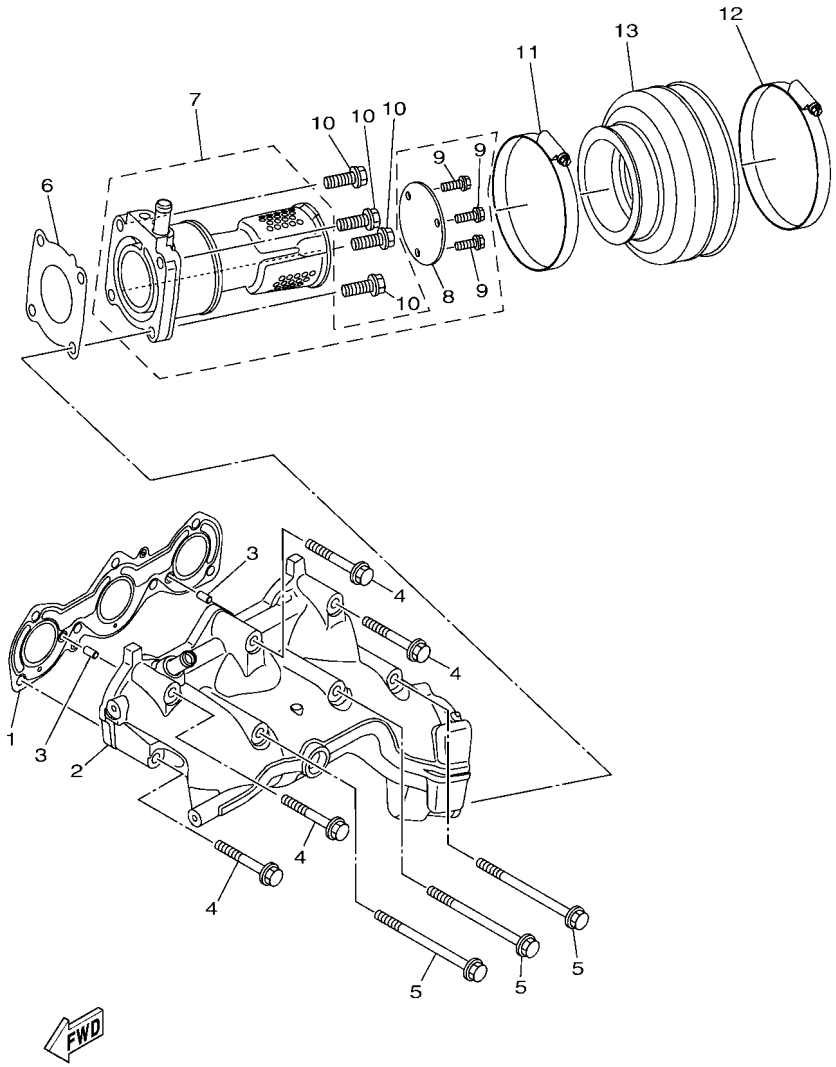


F3YD100-U090

## FIG. 9 EXHAUST 1

| REF. NO. | PART NO. | DESCRIPTION | F6N3 | | | | | REMARKS |
|---|---|---|---|---|---|---|---|---|
| 1 | 6GA–14613–00 | GASKET, EXHAUST PIPE | 1 | | | | | |
| 2 | 6GA–14711–00 | MUFFLER 1 | 1 | | | | | |
| 3 | 93606–12019 | PIN, DOWEL | 2 | | | | | |
| 4 | 90119–08034 | BOLT, WITH WASHER | 4 | | | | | |
| 5 | 90119–08097 | BOLT, WITH WASHER | 3 | | | | | |
| 6 | 6GA–14739–00 | GASKET, MUFFLER DAMPER 1 | 1 | | | | | |
| 7 | 6GA–14784–00 | PIPE, TAIL | 1 | | | | | |
| 8 | 6GA–1469W–00 | .PLATE, SILENCER 6 | 1 | | | | | |
| 9 | 95E34–06016 | .BOLT, FLANGE DEEP RECESS | 3 | | | | | |
| 10 | 95024–08030 | BOLT,FLG,(SMALL HEAD) | 4 | | | | | |
| 11 | 90450–99808 | HOSE CLAMP ASSY | 1 | | | | | |
| 12 | 90450–99810 | HOSE CLAMP ASSY | 1 | | | | | |
| 13 | 6GA–14752–00 | PIPE, OUTLET | 1 | | | | | |

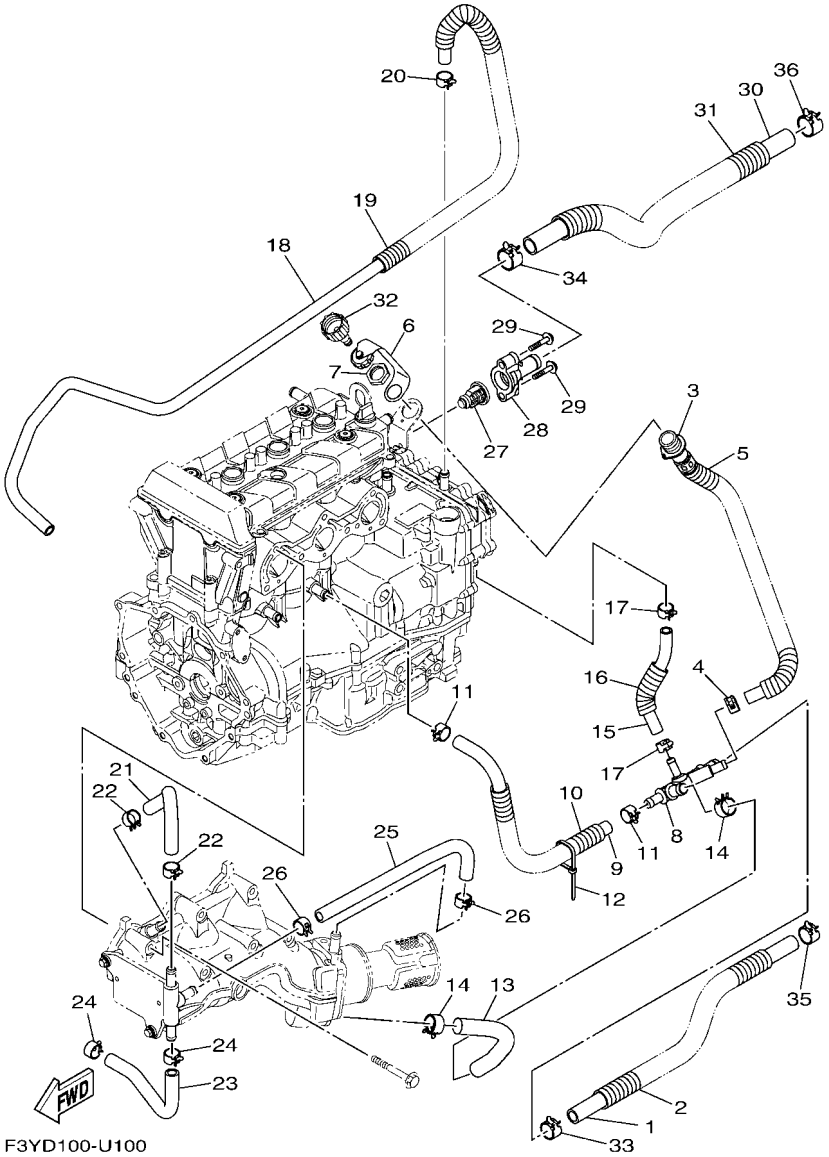


F3YD100-U100

## FIG. 10 EXHAUST 2

| REF. NO. | PART NO. | DESCRIPTION | F6N3 | | | | | REMARKS |
|---|---|---|---|---|---|---|---|---|
| 1 | 6GA–E243E–00 | HOSE 2 | 1 | | | | | |
| 2 | F3Y–U773D–10 | TUBE | 1 | | | | | |
| 3 | 6EY–12580–00 | JOINT ASSY | 1 | | | | | |
| 4 | 90467–150A5 | CLIP | 1 | | | | | |
| 5 | 90446–24M89 | HOSE (L420) | 1 | | | | | |
| 6 | 6EY–84385–00 | CAP,1 | 1 | | | | | |
| 7 | EU0–61652–00 | NUT | 1 | | | | | |
| 8 | 6EY–12584–00 | JOINT, HOSE 3 | 1 | | | | | |
| 9 | 90445–18012 | HOSE (L400) | 1 | | | | | |
| 10 | 90447–19014 | TUBE (L300) | 1 | | | | | |
| 11 | 90467–160A0 | CLIP | 2 | | | | | |
| 12 | 90464–35132 | CLAMP | 1 | | | | | |
| 13 | 90445–21015 | HOSE (L170) | 1 | | | | | |
| 14 | 90467–200A3 | CLIP | 2 | | | | | |
| 15 | 90445–16019 | HOSE (L160) | 1 | | | | | |
| 16 | 90446–24M44 | HOSE (L70) | 1 | | | | | |
| 17 | 90467–141A3 | CLIP | 2 | | | | | |
| 18 | 90445–16020 | HOSE (L1600) | 1 | | | | | |
| 19 | 6EY–24864–00 | TUBE | 1 | | | | | |
| 20 | 90467–160A0 | CLIP | 1 | | | | | |
| 21 | 6EY–12577–00 | HOSE 2 | 1 | | | | | |
| 22 | 90467–160A0 | CLIP | 2 | | | | | |
| 23 | 6S5–12579–00 | HOSE 4 | 1 | | | | | |
| 24 | 90467–160A0 | CLIP | 2 | | | | | |
| 25 | 90445–18018 | HOSE (L370) | 1 | | | | | |
| 26 | 90467–160A0 | CLIP | 2 | | | | | |
| 27 | 6D3–12411–00 | THERMOSTAT | 1 | | | | | |

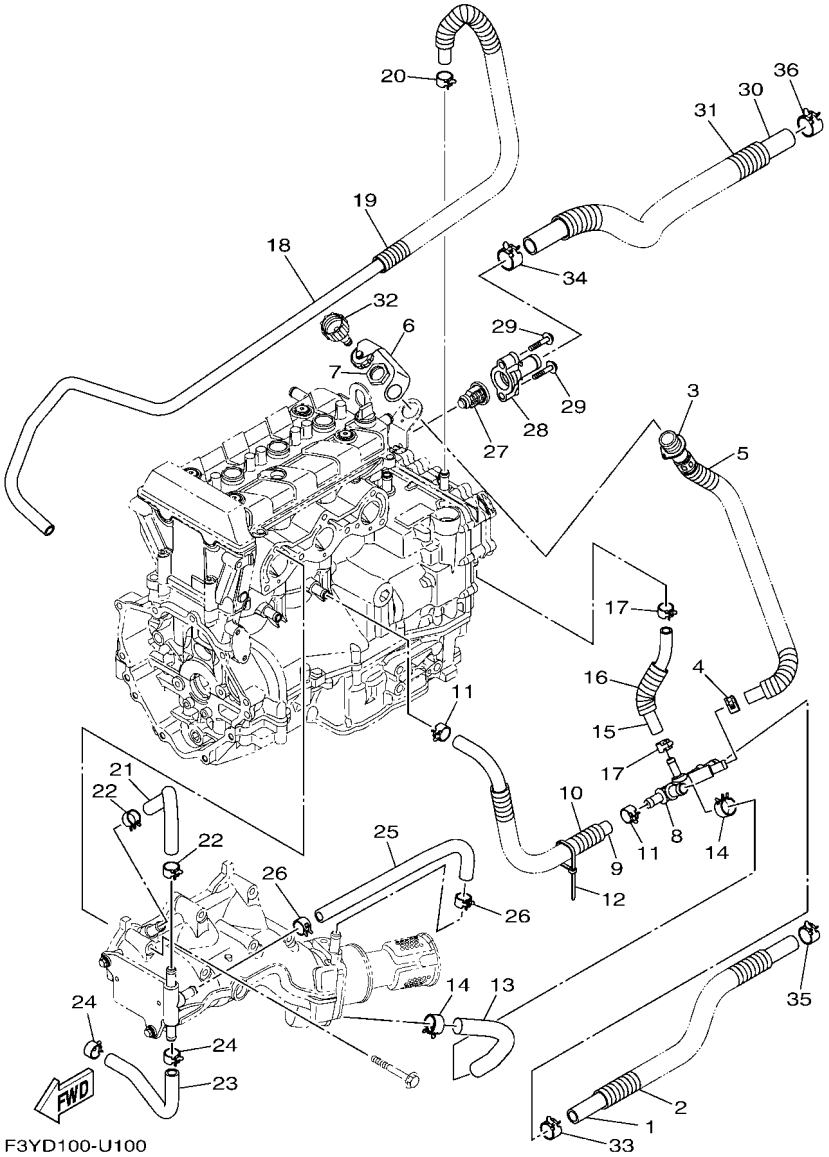


## FIG. 10 EXHAUST 2

| REF. NO. | PART NO. | DESCRIPTION | F6N3 | | | | | REMARKS |
|---|---|---|---|---|---|---|---|---|
| 28 | 6EY–12413–00 | COVER, THERMOSTAT | 1 | | | | | |
| 29 | 90105–06035 | BOLT, FLANGE | 2 | | | | | |
| 30 | 6GA–E243A–00 | HOSE 1 | 1 | | | | | |
| 31 | F3Y–U773D–20 | TUBE | 1 | | | | | |
| 32 | 67X–E2590–00 | CONDUCTION ASSY | 1 | | | | | FOR CAN |
| | 67X–E2590–10 | CONDUCTION ASSY | 1 | | | | | FOR EUR |
| 33 | 90467–200A3 | CLIP | 1 | | | | | |
| 34 | 90467–240A0 | CLIP | 1 | | | | | |
| 35 | 90467–200A3 | CLIP | 1 | | | | | |
| 36 | 90467–240A3 | CLIP | 1 | | | | | |

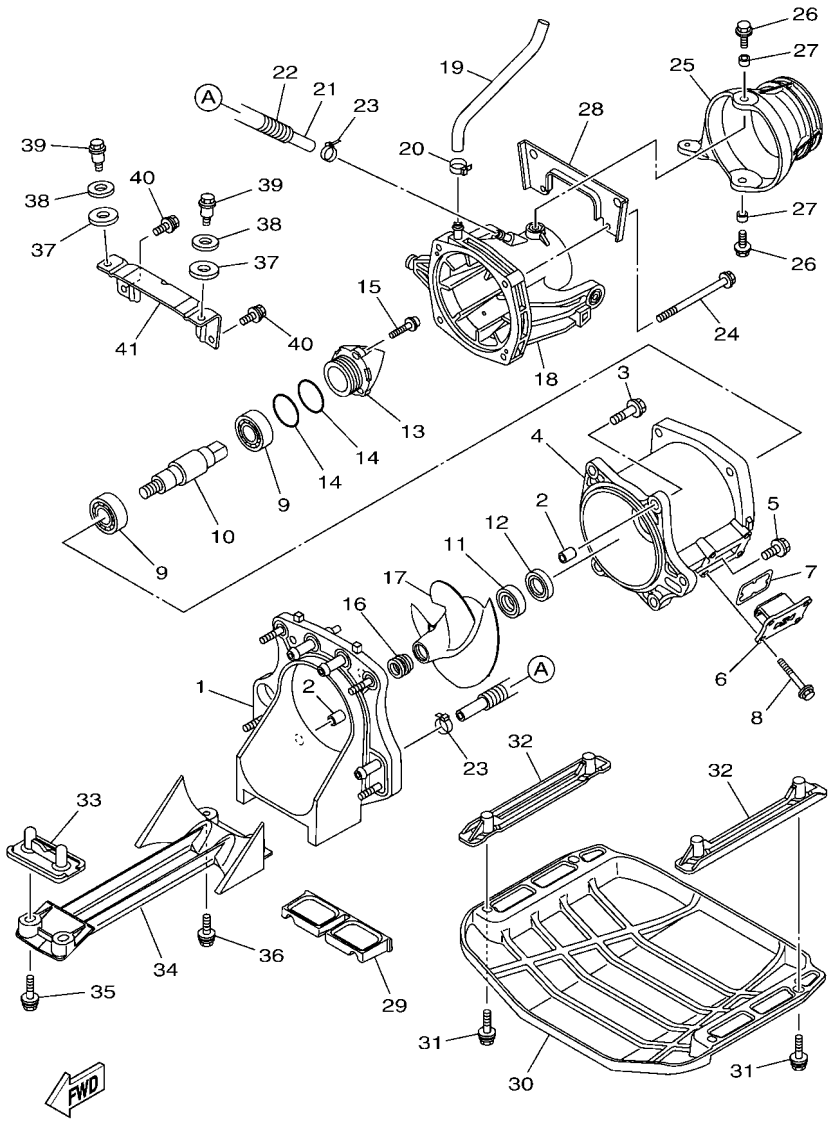


## FIG. 11 JET UNIT 1

| REF. NO. | PART NO. | DESCRIPTION | F6N3 | | | | | REMARKS |
|---|---|---|---|---|---|---|---|---|
| 1 | 6GA–G5831–00 | PLATE, TRANSOM | 1 | | | | | |
| 2 | 99590–14016 | PIN, DOWEL | 2 | | | | | |
| 3 | 90119–10067 | BOLT, WITH WASHER | 4 | | | | | |
| 4 | 6GA–R1312–02 | HOUSING, IMPELLER | 1 | | | | | |
| 5 | 90119–10808 | BOLT, WITH WASHER | 1 | | | | | |
| 6 | 6GA–G6882–00 | FILTER | 1 | | | | | |
| 7 | 6GA–G2414–00 | O-RING | 1 | | | | | |
| 8 | 90119–06889 | BOLT, WITH WASHER | 4 | | | | | |
| 9 | 93306–255X7 | BEARING | 2 | | | | | |
| 10 | 6GA–G5514–00 | SHAFT, DRIVE 4 | 1 | | | | | |
| 11 | 93102–25M34 | OIL SEAL | 1 | | | | | |
| 12 | 93101–25M50 | OIL SEAL | 1 | | | | | |
| 13 | 6EX–R1326–10 | CAP | 1 | | | | | |
| 14 | 93210–44003 | O-RING | 2 | | | | | |
| 15 | 90110–06822 | BOLT, HEXAGON SOCKET HEAD | 3 | | | | | |
| 16 | 6DU–51319–00 | CAP, IMPELLER | 1 | | | | | |
| 17 | 6GA–R1321–00 | IMPELLER | 1 | | | | | |
| 18 | 6GA–R1318–00 | NOZZLE | 1 | | | | | |
| 19 | 6GA–U72M2–00 | HOSE 1 | 1 | | | | | |
| 20 | 90601–118UF | BAND, HOSE 18 | 1 | | | | | |
| 21 | 90445–14025 | HOSE (L220) | 1 | | | | | |
| 22 | 90447–15005 | TUBE (L180) | 1 | | | | | |
| 23 | 90465–11829 | CLAMP | 2 | | | | | |
| 24 | 90119–08881 | BOLT, WITH WASHER | 4 | | | | | |
| 25 | 6BU–R1313–00 | NOZZLE, DEFLECTOR | 1 | | | | | |
| 26 | 90119–08840 | BOLT, WITH WASHER | 2 | | | | | |
| 27 | 90387–08M06 | COLLAR | 2 | | | | | |

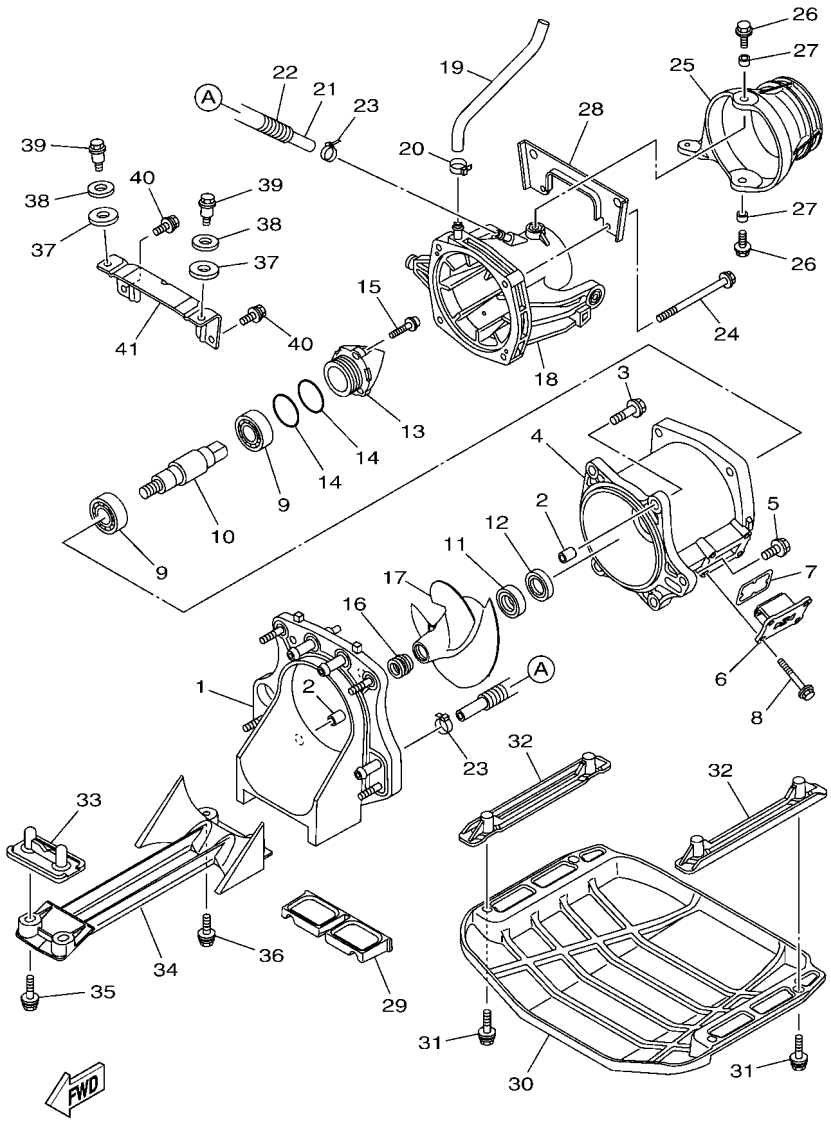


## FIG. 11 JET UNIT 1

| REF. NO. | PART NO. | DESCRIPTION | F6N3 | | | | | REMARKS |
|---|---|---|---|---|---|---|---|---|
| 28 | 6GA–R1959–00 | BRACKET | 1 | | | | | |
| 29 | F3Y–U72C0–00 | SPACER | 1 | | | | | |
| 30 | F3Y–U273B–10 | PLATE 2 | 1 | | | | | |
| 31 | F4L–U3222–01 | BOLT | 4 | | | | | |
| 32 | F0V–U8572–10 | BRACKET 2 | 2 | | | | | |
| 33 | F2S–U8577–00 | BRACKET, 3 | 1 | | | | | |
| 34 | 6GA–R1333–00 | SCREEN, INTAKE | 1 | | | | | |
| 35 | F3Y–U1426–01 | BOLT | 2 | | | | | |
| 36 | F3Y–U1426–01 | BOLT | 2 | | | | | |
| 37 | 90430–12002 | GASKET | 2 | | | | | |
| 38 | 92990–12200 | WASHER, PLAIN | 2 | | | | | |
| 39 | 90109–08041 | BOLT | 2 | | | | | |
| 40 | 90119–089U7 | BOLT, WITH WASHER | 2 | | | | | |
| 41 | F3Y–U7557–00 | BRACKET | 1 | | | | | |

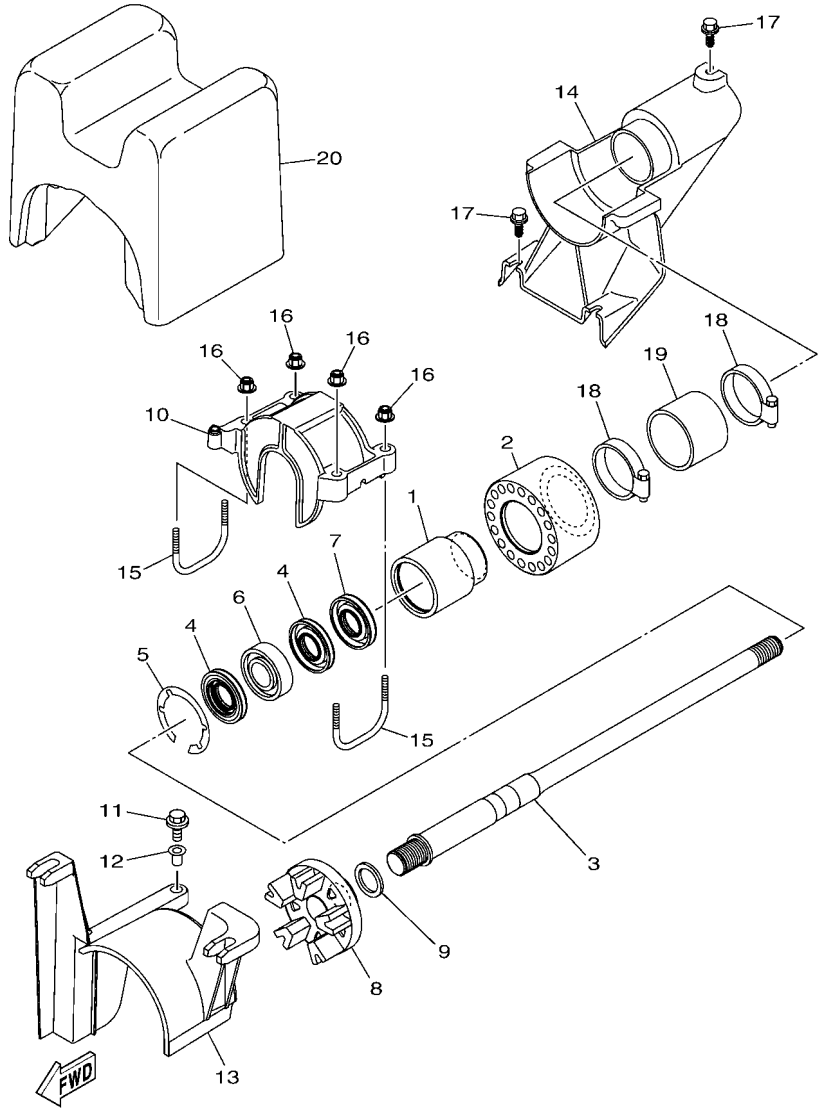


F3Y7100-T120

## FIG. 12 JET UNIT 2

| REF. NO. | PART NO. | DESCRIPTION | F6N3 | | | | | REMARKS |
|---|---|---|---|---|---|---|---|---|
| 1 | 6GA–G5332–00 | HOUSING, BEARING | 1 | | | | | |
| 2 | 6GA–G5235–00 | DAMPER | 1 | | | | | |
| 3 | 6GA–G5511–00 | SHAFT, DRIVE | 1 | | | | | |
| 4 | 93101–25M55 | OIL SEAL | 2 | | | | | |
| 5 | 99009–52500 | CIRCLIP | 1 | | | | | |
| 6 | 93306–205XG | BEARING | 1 | | | | | |
| 7 | 93101–25M56 | OIL SEAL | 1 | | | | | |
| 8 | 6GA–G5593–00 | FLANGE, COUPLING 1 | 1 | | | | | |
| 9 | 90201–24800 | WASHER, PLATE | 1 | | | | | |
| 10 | F3Y–U2155–01 | CAP | 1 | | | | | |
| 11 | 90119–06891 | BOLT, WITH WASHER | 1 | | | | | |
| 12 | 90387–06289 | COLLAR | 1 | | | | | |
| 13 | 6GA–R1381–00 | COVER | 1 | | | | | |
| 14 | F3Y–U883E–01 | JOINT, PIPE | 1 | | | | | |
| 15 | F3Y–U3746–01 | NUT,INSERT | 2 | | | | | |
| 16 | F2N–U142L–00 | NUT, LOCK | 4 | | | | | |
| 17 | 90109–06832 | BOLT | 3 | | | | | |
| 18 | 90601–155U4 | BAND, HOSE 55 | 2 | | | | | |
| 19 | F3Y–U883B–00 | PIPE 1 | 1 | | | | | |
| 20 | F3Y–U892D–01 | FLOTATION, STERN RH | 1 | | | | | |

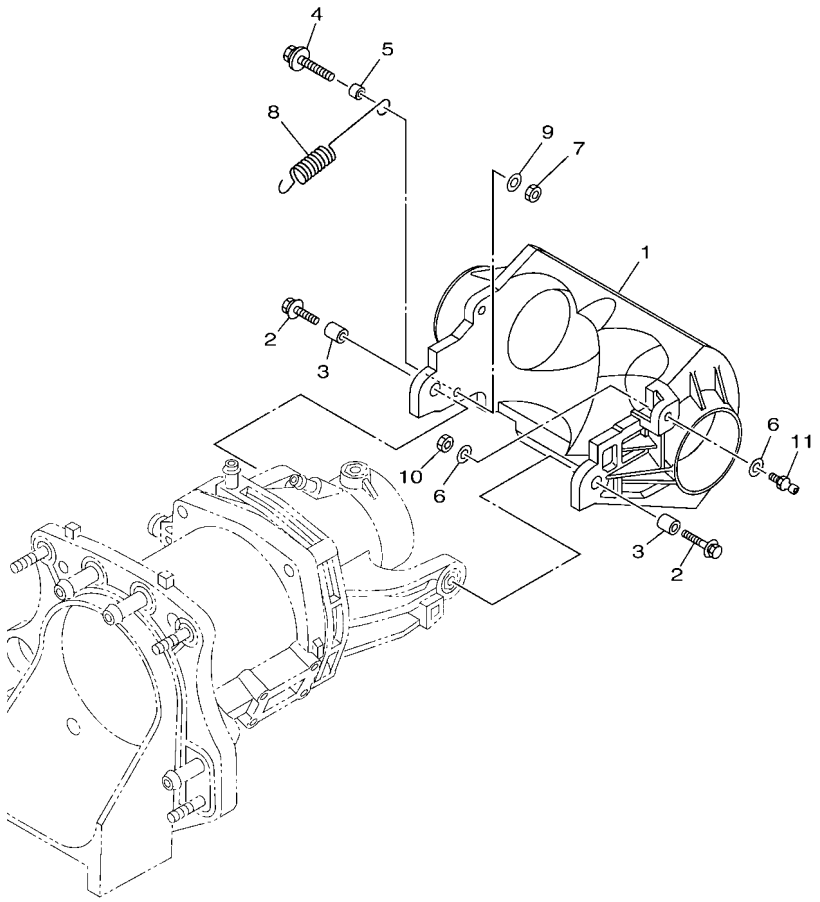


F3Y1100-S130

## FIG. 13 JET UNIT 3

| REF. NO. | PART NO. | DESCRIPTION | F6N3 | | | | | REMARKS |
|---|---|---|---|---|---|---|---|---|
| 1 | 6GA–R1314–00 | GATE, REVERSE | 1 | | | | | |
| 2 | 90119–08840 | BOLT, WITH WASHER | 2 | | | | | |
| 3 | 90387–08M30 | COLLAR | 2 | | | | | |
| 4 | 90119–069UX | BOLT, WITH WASHER | 1 | | | | | |
| 5 | 90387–06319 | COLLAR | 1 | | | | | |
| 6 | 90201–06801 | WASHER, PLATE | 2 | | | | | |
| 7 | 95380–06600 | NUT, HEXAGON | 1 | | | | | |
| 8 | 6GA–R2358–00 | SPRING, RETAINER | 1 | | | | | |
| 9 | 90201–06801 | WASHER, PLATE | 1 | | | | | |
| 10 | 95380–06600 | NUT, HEXAGON | 1 | | | | | |
| 11 | 6GA–U1461–10 | STUD, JOINT BALL | 1 | | | | | |

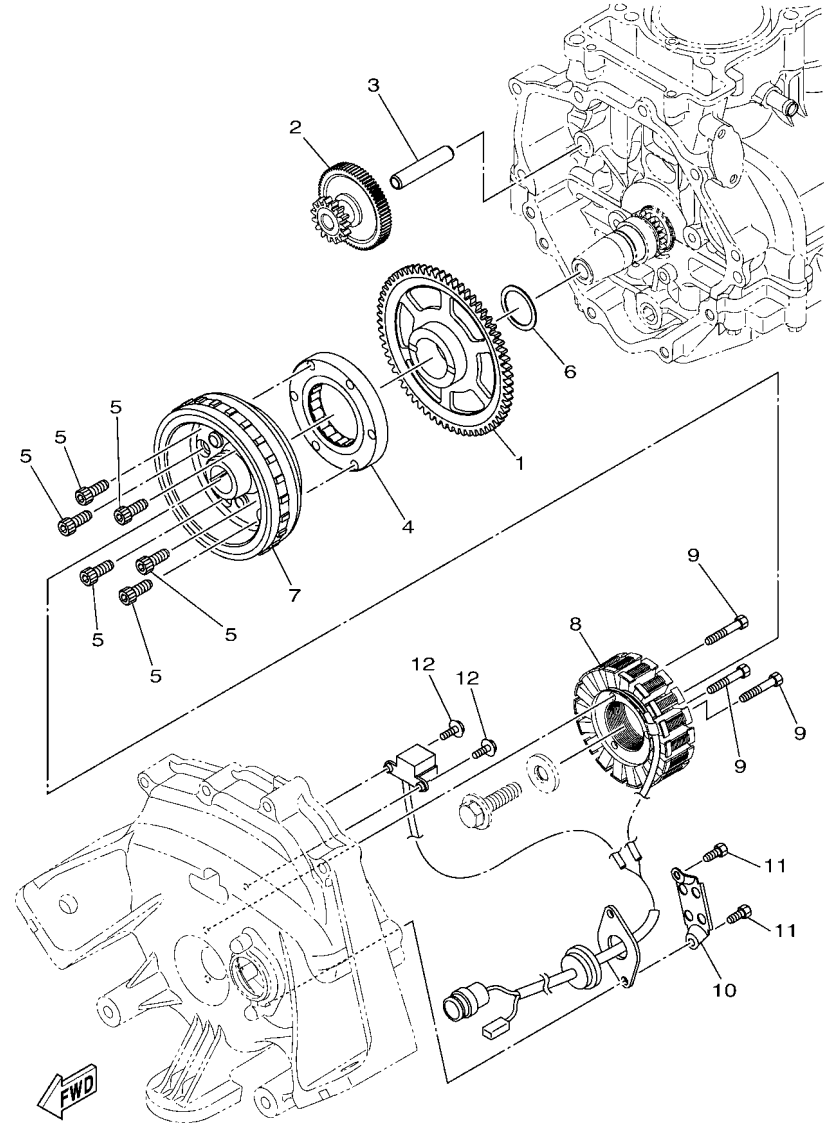

F4G1100-R140

## FIG. 14 GENERATOR

| REF. NO. | PART NO. | DESCRIPTION | F6N3 | | | | | REMARKS |
|---|---|---|---|---|---|---|---|---|
| 1 | 8FA–15515–00 | GEAR 3 | 1 | | | | | |
| 2 | 2HC–15512–00 | GEAR, IDLER 1 | 1 | | | | | |
| 3 | 8ES–15521–00 | SHAFT 1 | 1 | | | | | |
| 4 | 6EY–15590–00 | STARTER ONE-WAY ASSY | 1 | | | | | |
| 5 | 90110–08212 | BOLT, HEXAGON SOCKET HEAD | 6 | | | | | |
| 6 | 90201–30013 | WASHER, PLATE | 1 | | | | | |
| 7 | 6EY–81450–01 | ROTOR ASSY | 1 | | | | | |
| 8 | 6EY–81410–00 | STATOR ASSY | 1 | | | | | |
| 9 | 91317–06035 | BOLT, HEXAGON SOCKET HEAD | 3 | | | | | |
| 10 | 60E–81328–00 | CLAMP | 1 | | | | | |
| 11 | 91317–06014 | BOLT, HEXAGON SOCKET HEAD | 2 | | | | | |
| 12 | 97513–05514 | BOLT, WITH WASHER | 2 | | | | | |

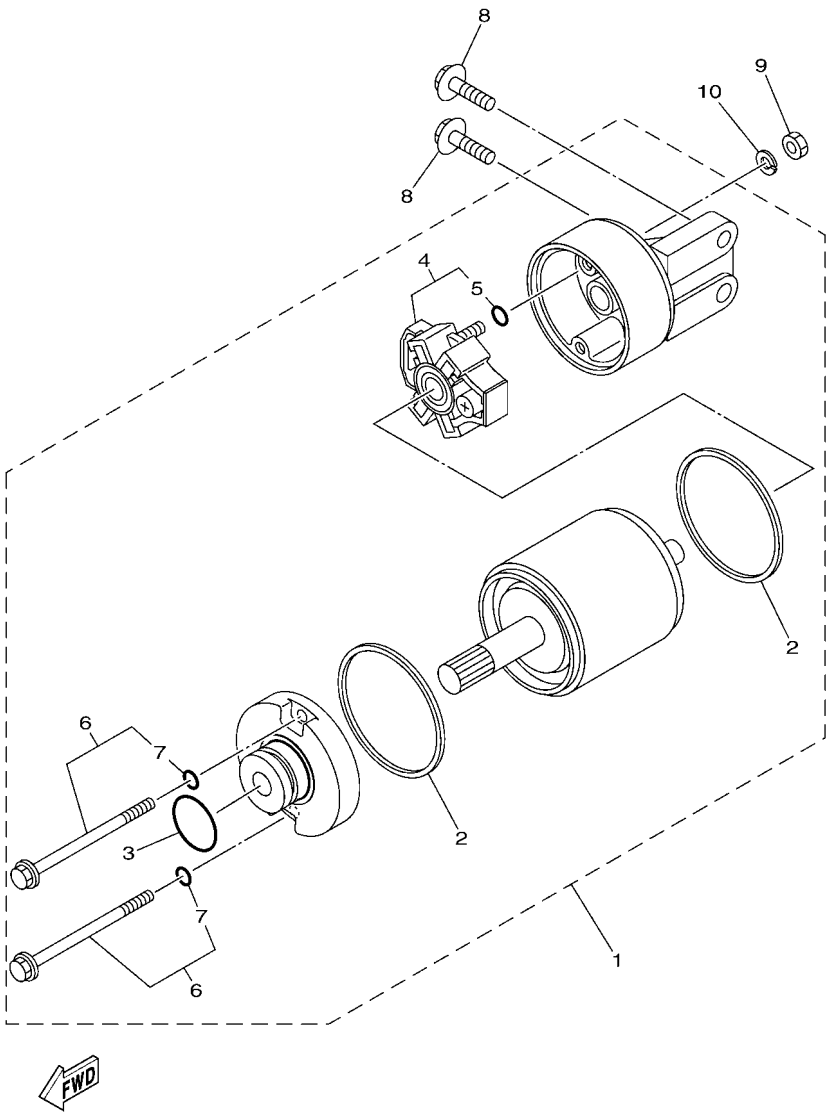


## FIG. 15 STARTING MOTOR

| REF. NO. | PART NO. | DESCRIPTION | F6N3 | | | | | REMARKS |
|---|---|---|---|---|---|---|---|---|
| 1 | 6EY–81800–00 | STARTING MOTOR ASSY | 1 | | | | | |
| 2 | 11H–81844–00 | .GASKET | 2 | | | | | |
| 3 | 1FK–81847–00 | .O-RING | 1 | | | | | |
| 4 | 6EY–81840–00 | .BRUSH HOLDER ASSY | 1 | | | | | |
| 5 | 3TB–81847–00 | ..O-RING | 1 | | | | | |
| 6 | 6EY–81826–00 | .BOLT | 2 | | | | | |
| 7 | 3TB–81847–00 | ..O-RING | 1 | | | | | |
| 8 | 97513–08530 | BOLT, WITH WASHER | 2 | | | | | |
| 9 | 95380–06700 | NUT | 1 | | | | | |
| 10 | 92990–06100 | WASHER, SPRING | 1 | | | | | |

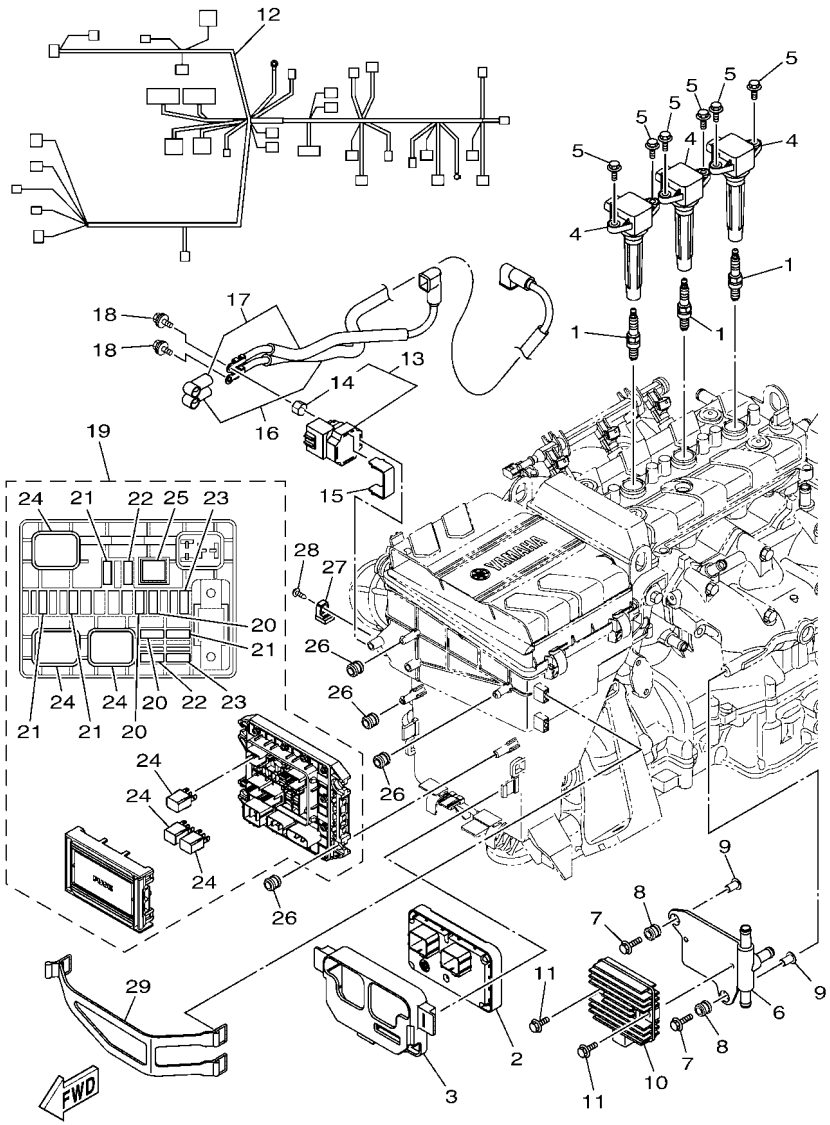


F3YR100-X160

## FIG. 16 ELECTRICAL 1

| REF. NO. | PART NO. | DESCRIPTION | F6N3 | | | | | REMARKS |
|---|---|---|---|---|---|---|---|---|
| 1 | 94702–00409 | PLUG, SPARK (NGK CR9EB) | 3 | | | | | |
| 2 | 6GA–8591A–31 | ENGINE CONTROL UNIT ASSY | 1 | | | | | |
| 3 | 6EY–8591S–00 | GROMMET, ECU | 1 | | | | | |
| 4 | 6EX–82310–02 | IGNITION COIL ASSY | 3 | | | | | |
| 5 | 95880–06016 | BOLT, FLANGE | 6 | | | | | |
| 6 | 6EY–81975–00 | PLATE, RECTIFIER FITTING | 1 | | | | | |
| 7 | 90119–06311 | BOLT, WITH WASHER | 2 | | | | | |
| 8 | 6A0–82317–01 | DAMPER, IGNITION COIL | 2 | | | | | |
| 9 | 90387–06119 | COLLAR | 2 | | | | | |
| 10 | 6D3–81960–01 | RECTIFIER & REGULATOR ASSY | 1 | | | | | |
| 11 | 95814–06020 | BOLT, FLANGE | 2 | | | | | |
| 12 | 6GA–8259L–51 | WIRE HARNESS ASSY 1 | 1 | | | | | |
| 13 | 6EY–81940–09 | STARTER RELAY ASSY | 1 | | | | | |
| 14 | 6EY–82355–00 | .GROMMET | 1 | | | | | |
| 15 | 6EY–81953–00 | STAY, RELAY | 1 | | | | | |
| 16 | 6GA–82115–01 | WIRE, PLUS LEAD | 1 | | | | | |
| 17 | 6EY–82117–00 | WIRE, LEAD | 1 | | | | | |
| 18 | 97E95–06612 | BOLT, HEXAGON W/W DEEP RECESS | 2 | | | | | |
| 19 | 6EX–82170–12 | FUSE BOX ASSY | 1 | | | | | |
| 20 | 67F–82151–30 | .FUSE (3A) | 3 | | | | | |
| 21 | 67F–82151–40 | .FUSE (10A) | 4 | | | | | |
| 22 | 67F–82151–00 | .FUSE (20A) | 2 | | | | | |
| 23 | 67F–82151–10 | .FUSE (30A) | 2 | | | | | |
| 24 | 6EX–8195A–00 | .RELAY ASSY | 3 | | | | | |
| 25 | 6EX–2812A–00 | .PULLER, FUSE | 1 | | | | | |
| 26 | 6A0–82317–01 | DAMPER, IGNITION COIL | 4 | | | | | |
| 27 | 6AA–85542–00 | BRACKET | 1 | | | | | |

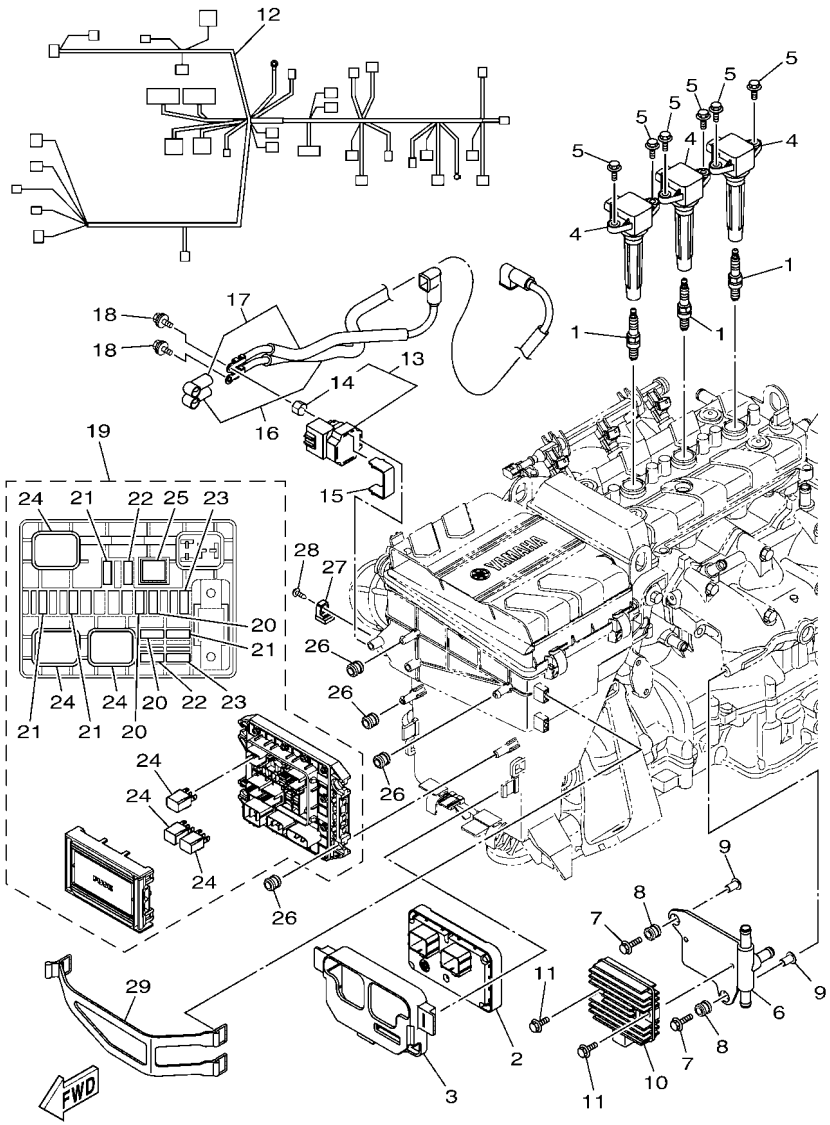


F3YR100-X160

## FIG. 16 ELECTRICAL 1

| REF. NO. | PART NO. | DESCRIPTION | F6N3 | | | | | REMARKS |
|---|---|---|---|---|---|---|---|---|
| 28 | 90160–05003 | SCREW, ROUND TAPPING | 1 | | | | | |
| 29 | 6EY–82593–01 | BAND | 1 | | | | | |

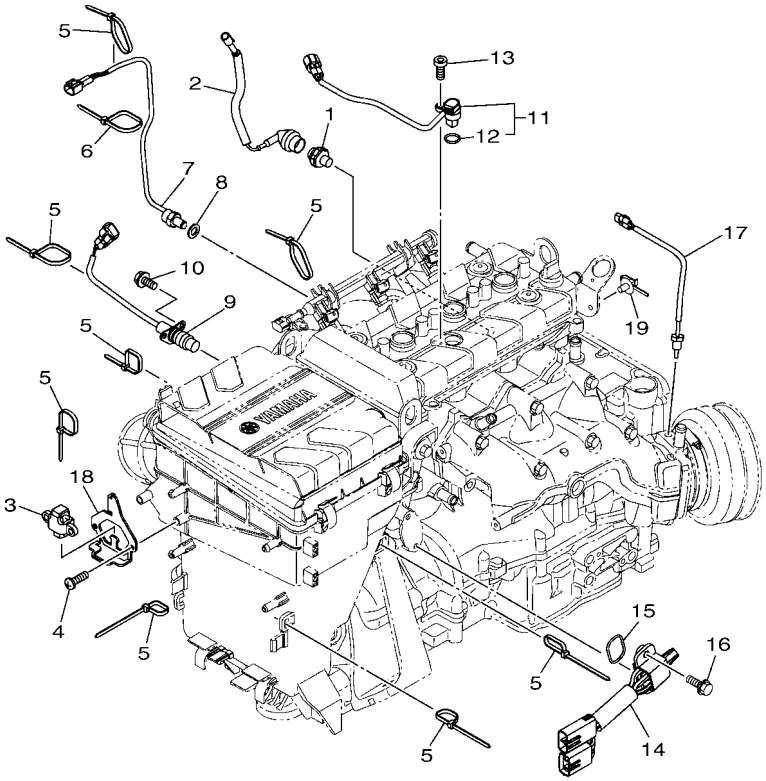

F3YD100-U170

## FIG. 17 ELECTRICAL 2

| REF. NO. | PART NO. | DESCRIPTION | F6N3 | | | | | REMARKS |
|---|---|---|---|---|---|---|---|---|
| 1 | 68V–82504–00 | OIL PRESSURE SWITCH ASSY | 1 | | | | | |
| 2 | 60E–81315–01 | LEAD WIRE ASSY | 1 | | | | | |
| 3 | 6ET–82576–00 | SENSOR, LEAN ANGLE | 1 | | | | | |
| 4 | 97780–60520 | SCREW, TAPPING | 2 | | | | | |
| 5 | 90464–35132 | CLAMP | 8 | | | | | |
| 6 | 90465–13M39 | CLAMP | 1 | | | | | |
| 7 | 61A–85790–01 | THERMOSENSOR ASSY | 1 | | | | | |
| 8 | 92990–10600 | WASHER, PLATE | 1 | | | | | |
| 9 | 6CR–82560–00 | THERMO SWITCH ASSY | 1 | | | | | |
| 10 | 97E95–06520 | BOLT, HEXAGON W/W DEEP RECESS | 2 | | | | | |
| 11 | 2S3–85896–02 | SENSOR, CAM POSITION | 1 | | | | | |
| 12 | 4D9–81168–00 | .O-RING | 1 | | | | | |
| 13 | 91380–06016 | BOLT | 1 | | | | | |
| 14 | 6CS–8273J–11 | EARTH PLATE COMP. | 1 | | | | | |
| 15 | 93210–32172 | O-RING | 1 | | | | | |
| 16 | 90119–06MA3 | BOLT, WITH WASHER | 2 | | | | | |
| 17 | 6DE–85790–00 | THERMOSENSOR ASSY | 1 | | | | | |
| 18 | 6EY–83618–10 | PLATE | 1 | | | | | |
| 19 | 90464–20005 | CLAMP | 1 | | | | | |

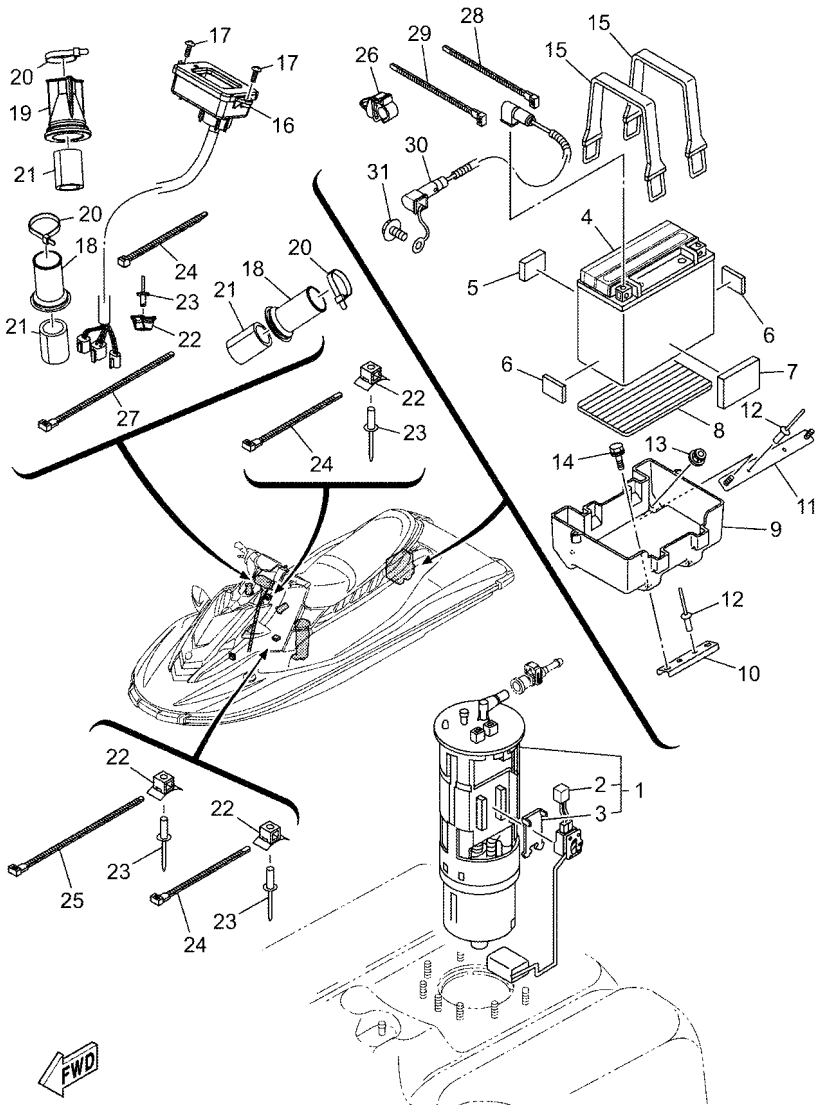


F6N3100-Z180

## FIG. 18 ELECTRICAL 3

| REF. NO. | PART NO. | DESCRIPTION | F6N3 | | | | | REMARKS |
|---|---|---|---|---|---|---|---|---|
| 1 | 6S5–13907–05 | FUEL PUMP COMP. | 1 | | | | | |
| 2 | 6S5–682E0–10 | .FUEL SENDER ASSY | 1 | | | | | |
| 3 | 60E–82556–10 | .DAMPER, STOPPER | 1 | | | | | |
| 4 | 5FU–H2100–20 | BATTERY ASSY (YUASA YTX20L-BS) | 1 | | | | | |
| 5 | F2C–U1743–00 | PACKING | 1 | | | | | |
| 6 | EU0–U8221–31 | PAD, BATTERY | 2 | | | | | |
| 7 | F1W–U759C–01 | MAT 2 | 1 | | | | | |
| 8 | F1S–U8221–00 | PAD, BATTERY | 1 | | | | | |
| 9 | F2S–U8211–00 | CASE, BATTERY | 1 | | | | | |
| 10 | F2S–U8592–00 | PLATE, BASE 2 | 1 | | | | | |
| 11 | F2S–U8593–00 | PLATE, BASE 3 | 1 | | | | | |
| 12 | 90267–489U1 | RIVET,BLIND | 4 | | | | | |
| 13 | F2N–U142L–00 | NUT, LOCK | 2 | | | | | |
| 14 | 90119–06832 | BOLT, WITH WASHER | 2 | | | | | |
| 15 | F4P–U821D–00 | BAND, BATTERY 1 | 2 | | | | | |
| 16 | F4L–U820A–00 | METER ASSY | 1 | | | | | |
| 17 | F2S–U7823–01 | SCREW | 2 | | | | | |
| 18 | GU2–6822E–01 | GROMMET | 2 | | | | | |
| 19 | F3J–U822E–01 | GROMMET | 1 | | | | | |
| 20 | 90464–32801 | CLAMP | 3 | | | | | |
| 21 | GJ1–U7578–22 | PACKING, HOSE 2 | 3 | | | | | |
| 22 | F1W–U828M–00 | BASE, CLAMP | 6 | | | | | |
| 23 | 90267–48806 | RIVET, BLIND | 6 | | | | | |
| 24 | 90464–32801 | CLAMP | 4 | | | | | |
| 25 | 90601–200U2 | BAND | 2 | | | | | |
| 26 | 90464–10008 | CLAMP | 1 | | | | | |
| 27 | 90601–200U2 | BAND | 1 | | | | | |

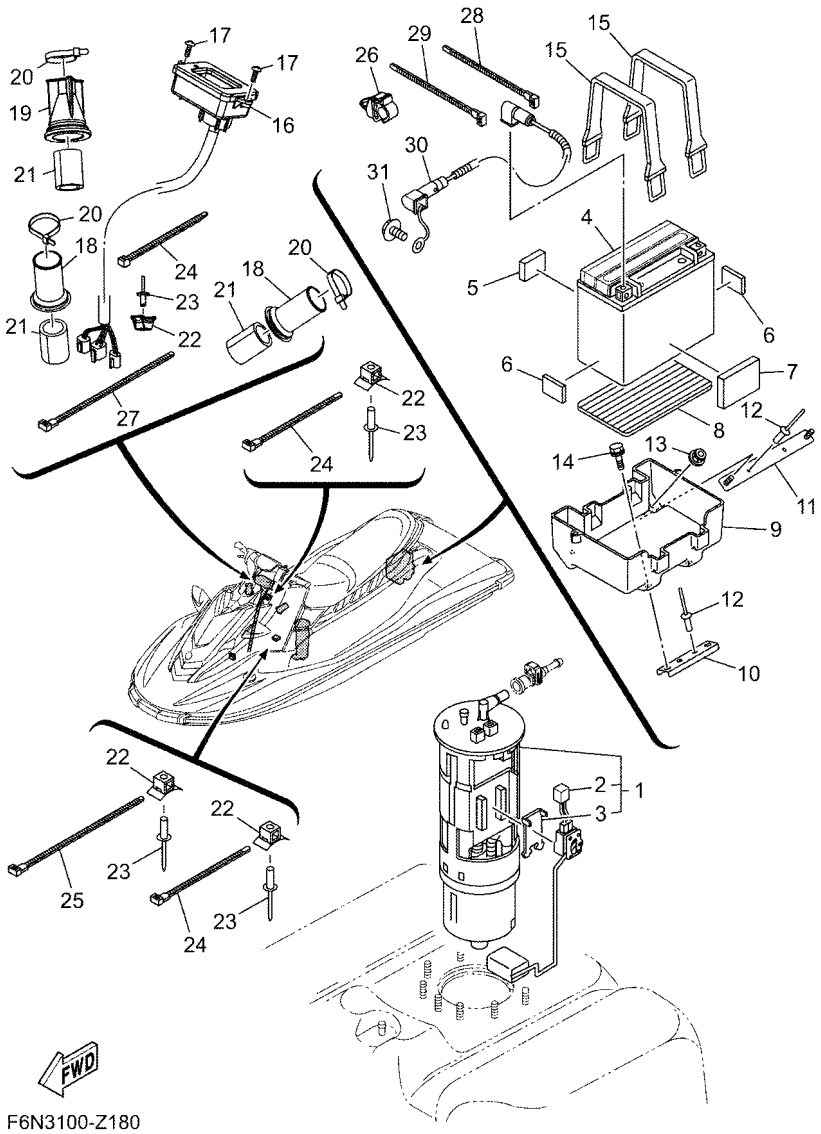


F6N3100-Z180

## FIG. 18 ELECTRICAL 3

| REF. NO. | PART NO. | DESCRIPTION | F6N3 | | | | | REMARKS |
|---|---|---|---|---|---|---|---|---|
| 28 | 90464–32801 | CLAMP | 1 | | | | | |
| 29 | 90464–32801 | CLAMP | 1 | | | | | |
| 30 | 6GA–82116–00 | WIRE, MINUS LEAD | 1 | | | | | |
| 31 | 97513–08514 | BOLT, WITH WASHER | 1 | | | | | |

## FIG. 19 ENGINE MOUNT

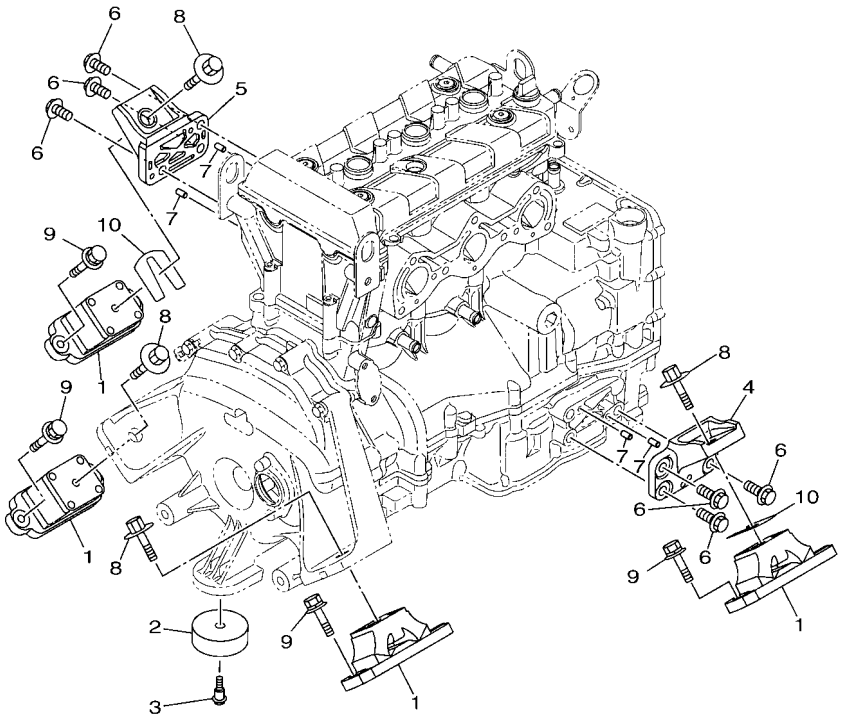


F3YK100-W190

| REF. NO. | PART NO. | DESCRIPTION | F6N3 | | | | | REMARKS |
|---|---|---|---|---|---|---|---|---|
| 1 | 6GA–44517–00 | MOUNT RUBBER | 4 | | | | | |
| 2 | 6EY–44574–00 | STOPPER, LOWER MOUNT RUBBER | 1 | | | | | |
| 3 | 90109–06M92 | BOLT | 1 | | | | | |
| 4 | 6EY–41661–10 | BRACKET 1 | 1 | | | | | |
| 5 | 6EY–41662–00 | BRACKET 2 | 1 | | | | | |
| 6 | 90105–10M49 | BOLT, FLANGE | 6 | | | | | |
| 7 | 93606–12019 | PIN, DOWEL | 4 | | | | | |
| 8 | 90119–08859 | BOLT, WITH WASHER | 4 | | | | | |
| 9 | 90119–08823 | BOLT, WITH WASHER | 8 | | | | | |
| 10 | EU0–U7354–00–01 | SHIM (T=0.1) | 4 | | | | | UN |
| | EU0–U7354–00–03 | SHIM (T=0.3) | 4 | | | | | UN |
| | EU0–U7354–00–05 | SHIM (T=0.5) | 4 | | | | | UN |
| | EU0–U7354–00–10 | SHIM (T=1.0) | 4 | | | | | UN |
| | EU0–U7354–00–20 | SHIM (T=2.0) | 4 | | | | | UN |

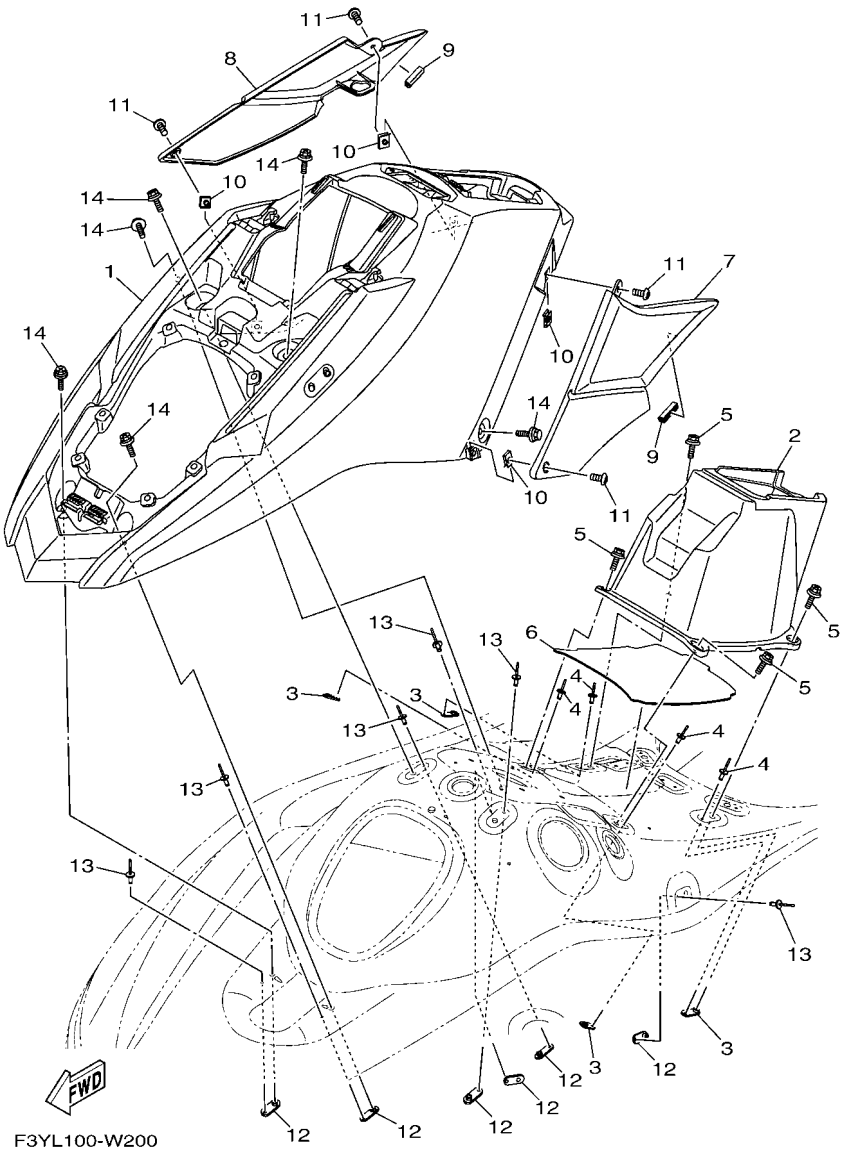


## FIG. 20 ENGINE HATCH 1

| REF. NO. | PART NO. | DESCRIPTION | F6N3 | | | | | REMARKS |
|---|---|---|---|---|---|---|---|---|
| 1 | F3Y–U516N–10 | COVER, ENGINE HATCH | 1 | | | | | FOR BLUE |
| | F3Y–U516N–00 | COVER, ENGINE HATCH | 1 | | | | | FOR BLACK |
| 2 | F3Y–U516P–00 | BOX GLOVE | 1 | | | | | |
| 3 | F2X–U5175–00 | PLATE, FIX | 4 | | | | | |
| 4 | 90267–489U1 | RIVET,BLIND | 4 | | | | | |
| 5 | 90119–06882 | BOLT, WITH WASHER | 4 | | | | | |
| 6 | F3Y–U759B–00 | MAT 1 | 1 | | | | | |
| 7 | F3Y–U353B–80 | PAD, KNEE | 1 | | | | | FOR BLUE |
| | F3Y–U353B–A0 | PAD, KNEE | 1 | | | | | FOR BLACK |
| 8 | F3Y–U353B–90 | PAD, KNEE | 1 | | | | | FOR BLUE |
| | F3Y–U353B–B0 | PAD, KNEE | 1 | | | | | FOR BLACK |
| 9 | F3Y–U828H–30 | TRIM, 1 | 2 | | | | | |
| 10 | 90183–06902 | NUT, SPRING | 4 | | | | | |
| 11 | 90111–06874 | BOLT, HEXAGON SOCKET BUTTON | 4 | | | | | |
| 12 | F2X–U5175–00 | PLATE, FIX | 6 | | | | | |
| 13 | 90267–489U1 | RIVET,BLIND | 6 | | | | | |
| 14 | 90119–06832 | BOLT, WITH WASHER | 6 | | | | | |

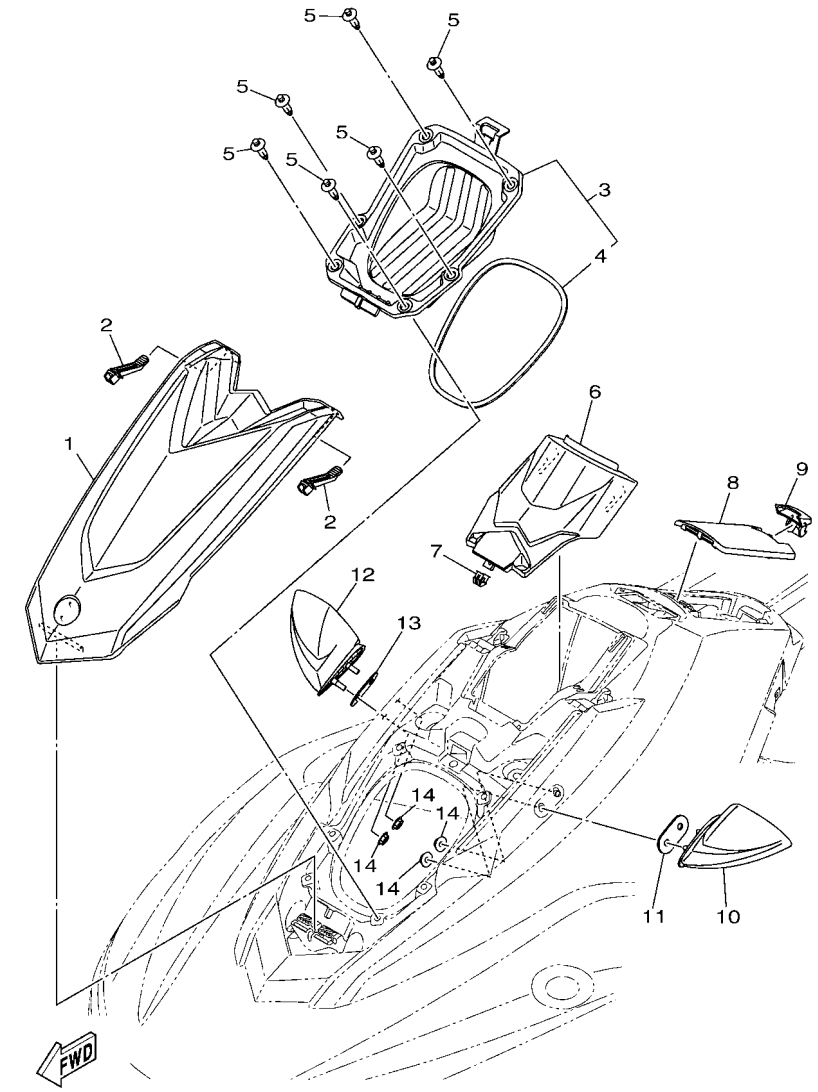


F3Y1100-S210

## FIG. 21 ENGINE HATCH 2

| REF. NO. | PART NO. | DESCRIPTION | F6N3 | | | | | REMARKS |
|---|---|---|---|---|---|---|---|---|
| 1 | F3Y–U517B–00–P0 | LID, ENGINE ROOM (VPBM6) | 1 | | | | | FOR BLUE |
| | F3Y–U517B–00–P2 | LID, ENGINE ROOM (RM9) | 1 | | | | | FOR BLACK |
| 2 | F3Y–U264L–00 | LOCK 1 | 2 | | | | | |
| 3 | F3Y–U475A–00 | BOWLOCKER ASSY | 1 | | | | | |
| 4 | F3Y–U2663–00 | .PACKING 1 | 1 | | | | | |
| 5 | 90269–08801 | RIVET | 6 | | | | | |
| 6 | F3Y–U513M–00 | COVER, FRONT | 1 | | | | | |
| 7 | F3Y–U153K–00 | CLIP | 1 | | | | | |
| 8 | F3Y–U517H–00 | LID HATCH | 1 | | | | | |
| 9 | F3Y–U2875–00 | LOCK | 1 | | | | | |
| 10 | F3Y–U596B–10 | MIRROR LH | 1 | | | | | |
| 11 | F3Y–U4953–00 | PLATE A | 1 | | | | | |
| 12 | F3Y–U596C–10 | MIRROR RH | 1 | | | | | |
| 13 | F3Y–U4953–00 | PLATE A | 1 | | | | | |
| 14 | 9572R–08300 | NUT, FLANGE | 4 | | | | | |

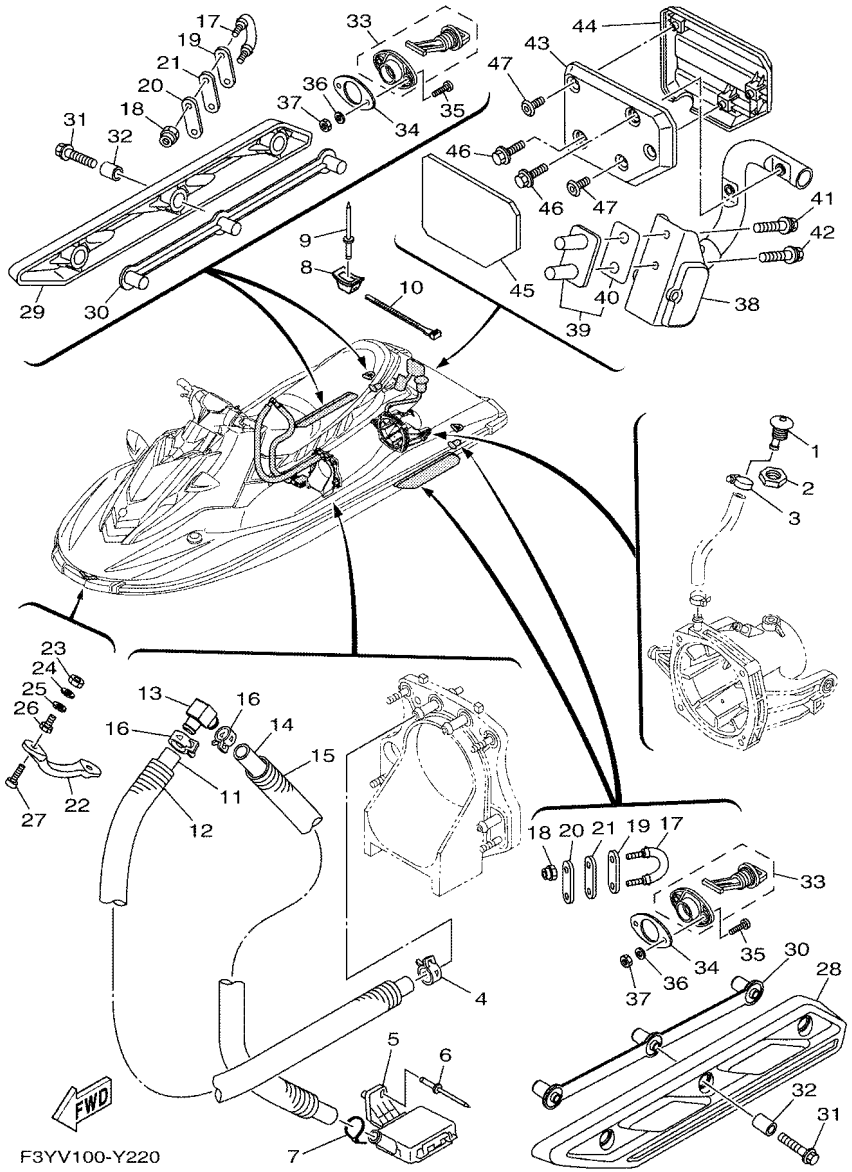


## FIG. 22 HULL & DECK

| REF. NO. | PART NO. | DESCRIPTION | F6N3 | | | | | REMARKS |
|---|---|---|---|---|---|---|---|---|
| 1 | F1W–U269B–00 | SPOUT | 1 | | | | | |
| 2 | EU0–61652–00 | NUT | 1 | | | | | |
| 3 | 90601–118UF | BAND, HOSE 18 | 1 | | | | | |
| 4 | 90467–180A5 | CLIP | 1 | | | | | |
| 5 | F1B–U761D–02 | STRAINER, BILGE | 1 | | | | | |
| 6 | 90267–489U8 | RIVET, BLIND | 1 | | | | | |
| 7 | 90465–11829 | CLAMP | 1 | | | | | |
| 8 | F1W–U828M–00 | BASE, CLAMP | 1 | | | | | |
| 9 | 90267–48806 | RIVET, BLIND | 1 | | | | | |
| 10 | 90601–200U2 | BAND | 1 | | | | | |
| 11 | 6GA–U771G–00 | HOSE 2 | 1 | | | | | |
| 12 | 6GA–U773E–00 | TUBE,2 | 1 | | | | | |
| 13 | 68N–5112T–00 | JOINT, HOSE | 1 | | | | | |
| 14 | 6GA–U784C–00 | HOSE | 1 | | | | | |
| 15 | 6GA–U773D–00 | TUBE | 1 | | | | | |
| 16 | 90467–180A5 | CLIP | 2 | | | | | |
| 17 | F2N–U1628–10 | STERN EYE | 2 | | | | | |
| 18 | 9572R–08300 | NUT, FLANGE | 4 | | | | | |
| 19 | GP7–U4953–10 | PLATE A | 2 | | | | | |
| 20 | GP7–U4953–10 | PLATE A | 2 | | | | | |
| 21 | F1B–U1653–03 | PACKING | 2 | | | | | |
| 22 | F1K–61624–00 | BOW EYE 1 | 1 | | | | | |
| 23 | 99780–12600 | NUT.HEX.(COARS) | 2 | | | | | |
| 24 | 92990–12200 | WASHER, PLAIN | 2 | | | | | |
| 25 | F0X–61637–00 | WASHER | 2 | | | | | |
| 26 | F0X–61652–01 | NUT | 2 | | | | | |
| 27 | 90110–06040 | BOLT, HEXAGON SOCKET HEAD | 2 | | | | | |

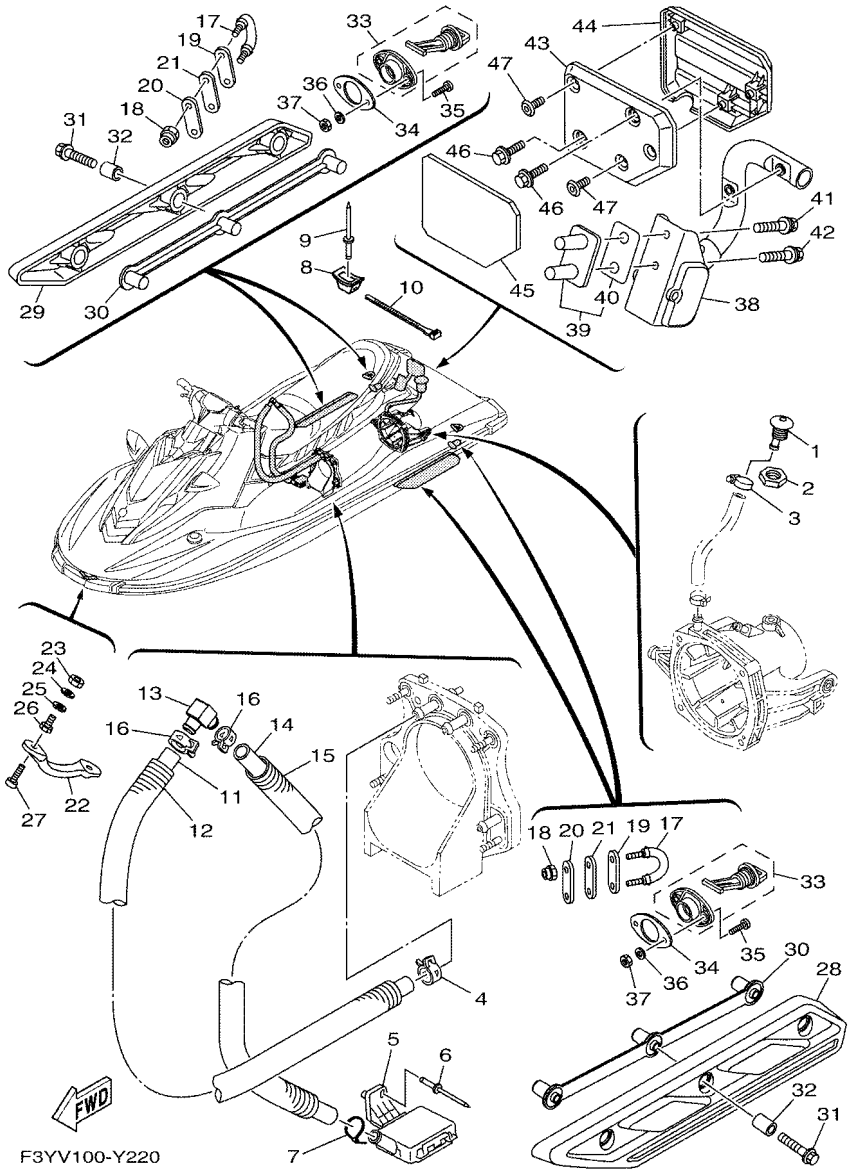


## FIG. 22 HULL & DECK

| REF. NO. | PART NO. | DESCRIPTION | F6N3 | | | | | REMARKS |
|---|---|---|---|---|---|---|---|---|
| 28 | F3Y–U883N–00 | STABILIZER LH | 1 | | | | | |
| 29 | F3Y–U883P–00 | STABILIZER RH | 1 | | | | | |
| 30 | F3Y–U883T–00 | BRACKET,STABILIZER | 2 | | | | | |
| 31 | 90105–08860 | BOLT, FLANGE | 6 | | | | | |
| 32 | F2N–U8169–10 | SPACER | 6 | | | | | |
| 33 | F1S–U2280–02 | DRAIN PLUG ASSY. | 2 | | | | | |
| 34 | F1S–U2285–01 | PACKING, DRAIN | 2 | | | | | |
| 35 | 9788R–05025 | SCREW, PAN HEAD | 4 | | | | | |
| 36 | 9299R–05200 | WASHER | 4 | | | | | |
| 37 | 9572R–05300 | NUT, FLANGE | 4 | | | | | |
| 38 | F3Y–U278A–02 | LADDER, STEP ASSY | 1 | | | | | |
| 39 | F2S–U278F–01 | BRACKET, LADDER LH | 1 | | | | | |
| 40 | F2S–U278H–01 | .PACKING, BRKT. 1 | 1 | | | | | |
| 41 | 90119–08861 | BOLT, WITH WASHER | 1 | | | | | |
| 42 | 90119–08861 | BOLT, WITH WASHER | 1 | | | | | |
| 43 | F3Y–U882F–00 | STEP | 1 | | | | | |
| 44 | F3Y–U884R–00 | PLATE, STEP 1 | 1 | | | | | |
| 45 | F3Y–U4994–00 | COVER STEP 1 | 1 | | | | | |
| 46 | 90119–06891 | BOLT, WITH WASHER | 2 | | | | | |
| 47 | F2S–U13C1–00 | SCREW | 3 | | | | | |

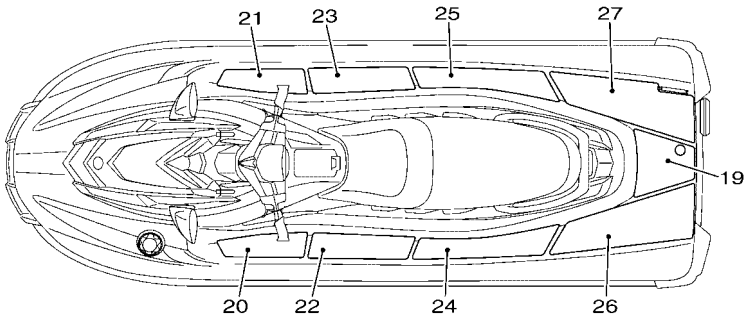


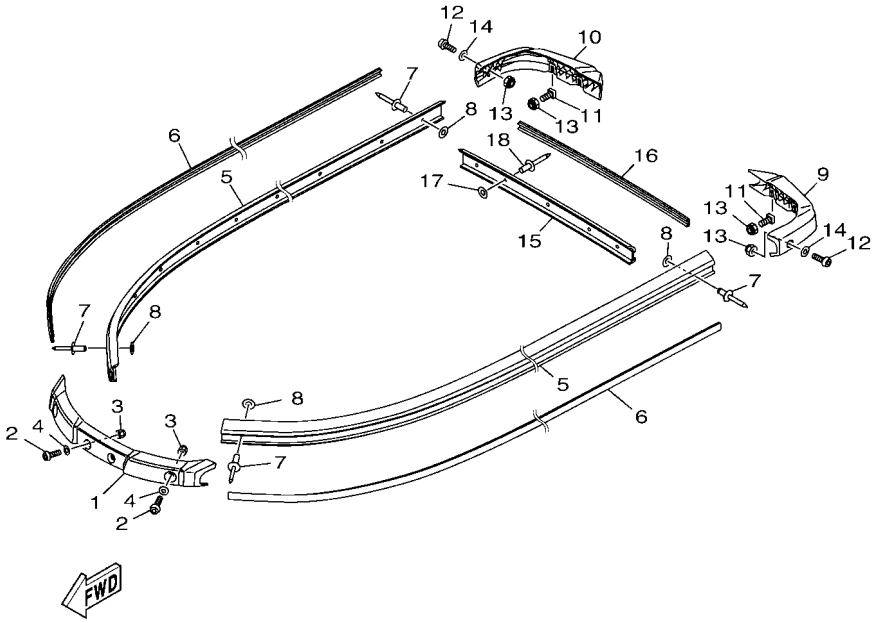


F3Y1100-S230

## FIG. 23 GUNWALE & MAT

| REF. NO. | PART NO. | DESCRIPTION | F6N3 | | | | | REMARKS |
|---|---|---|---|---|---|---|---|---|
| 1 | F3Y–U2511–00 | GUNWALE, BOW | 1 | | | | | BLACK |
| 2 | 90111–06803 | BOLT, HEXAGON SOCKET BUTTON | 4 | | | | | |
| 3 | F2N–U142L–00 | NUT, LOCK | 4 | | | | | |
| 4 | F3Y–U1174–00 | WASHER | 4 | | | | | |
| 5 | F3Y–U2512–03 | GUNWALE, SIDE | 2 | | | | | BLACK |
| 6 | F3Y–U2519–41 | INNER,GUNWALE | 2 | | | | | WHITE |
| 7 | 90267–489U8 | RIVET, BLIND | 30 | | | | | |
| 8 | 9299R–05200 | WASHER | 30 | | | | | |
| 9 | F3Y–U251D–00 | GUNWALE, STERN 1 | 1 | | | | | BLACK |
| 10 | F3Y–U251E–00 | GUNWALE, STERN 2 | 1 | | | | | BLACK |
| 11 | F1W–U491K–01 | BOLT, SPECIAL | 4 | | | | | |
| 12 | 90111–06803 | BOLT, HEXAGON SOCKET BUTTON | 2 | | | | | |
| 13 | F2N–U142L–00 | NUT, LOCK | 6 | | | | | |
| 14 | F3Y–U1174–00 | WASHER | 2 | | | | | |
| 15 | F3Y–U252C–00 | COVER, GUNWALE 1 | 1 | | | | | BLACK |
| 16 | F3Y–U252D–50 | COVER, GUNWALE 2 | 1 | | | | | WHITE |
| 17 | 9299R–05200 | WASHER | 5 | | | | | |
| 18 | 90267–489U8 | RIVET, BLIND | 5 | | | | | |
| 19 | F3Y–U3581–10 | MAT, UPPER | 1 | | | | | BLACK/BLUE FOR BLUE |
| | F3Y–U3581–40 | MAT, UPPER | 1 | | | | | BLACK/CYAN FOR BLACK |
| 20 | F3Y–U351H–10 | MAT, STEP 1 | 1 | | | | | BLACK/BLUE FOR BLUE |
| | F3Y–U351H–40 | MAT, STEP 1 | 1 | | | | | BLACK/CYAN FOR BLACK |
| 21 | F3Y–U351J–10 | MAT, STEP 2 | 1 | | | | | BLACK/BLUE FOR BLUE |
| | F3Y–U351J–40 | MAT, STEP 2 | 1 | | | | | BLACK/CYAN FOR BLACK |
| 22 | F3Y–U351K–10 | MAT, STEP 3 | 1 | | | | | BLACK/BLUE FOR BLUE |
| | F3Y–U351K–40 | MAT, STEP 3 | 1 | | | | | BLACK/CYAN FOR BLACK |
| 23 | F3Y–U351M–10 | MAT, STEP 4 | 1 | | | | | BLACK/BLUE FOR BLUE |

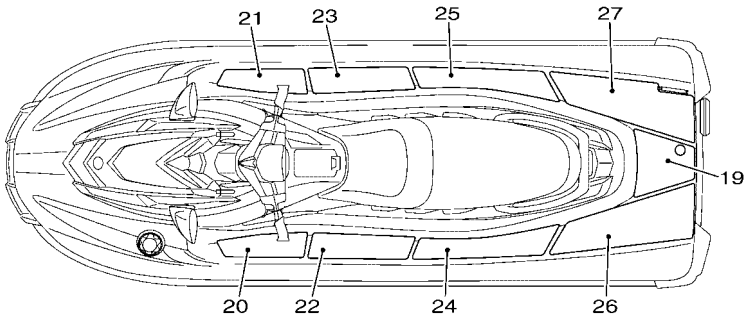


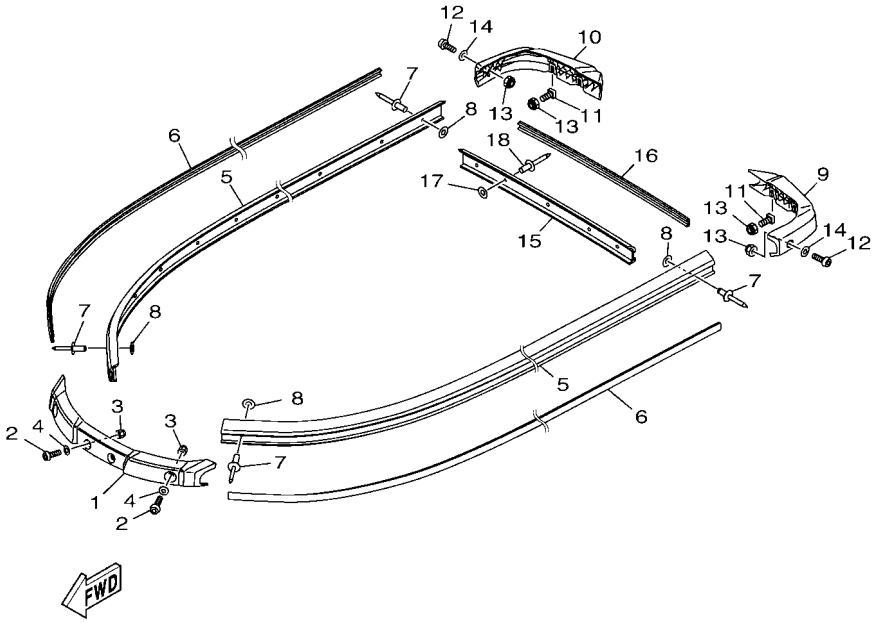


F3Y1100-S230

## FIG. 23 GUNWALE & MAT

| REF. NO. | PART NO. | DESCRIPTION | F6N3 | | | | | REMARKS |
|---|---|---|---|---|---|---|---|---|
| 23 | F3Y–U351M–40 | MAT, STEP 4 | 1 | | | | | BLACK/CYAN FOR BLACK |
| 24 | F3Y–U351N–10 | MAT, STEP 5 | 1 | | | | | BLACK/BLUE FOR BLUE |
| | F3Y–U351N–40 | MAT, STEP 5 | 1 | | | | | BLACK/CYAN FOR BLACK |
| 25 | F3Y–U351P–10 | MAT, STEP 6 | 1 | | | | | BLACK/BLUE FOR BLUE |
| | F3Y–U351P–40 | MAT, STEP 6 | 1 | | | | | BLACK/CYAN FOR BLACK |
| 26 | F3Y–U351R–10 | MAT, STEP 7 | 1 | | | | | BLACK/BLUE FOR BLUE |
| | F3Y–U351R–40 | MAT, STEP 7 | 1 | | | | | BLACK/CYAN FOR BLACK |
| 27 | F3Y–U351S–10 | MAT, STEP 8 | 1 | | | | | BLACK/BLUE FOR BLUE |
| | F3Y–U351S–40 | MAT, STEP 8 | 1 | | | | | BLACK/CYAN FOR BLACK |

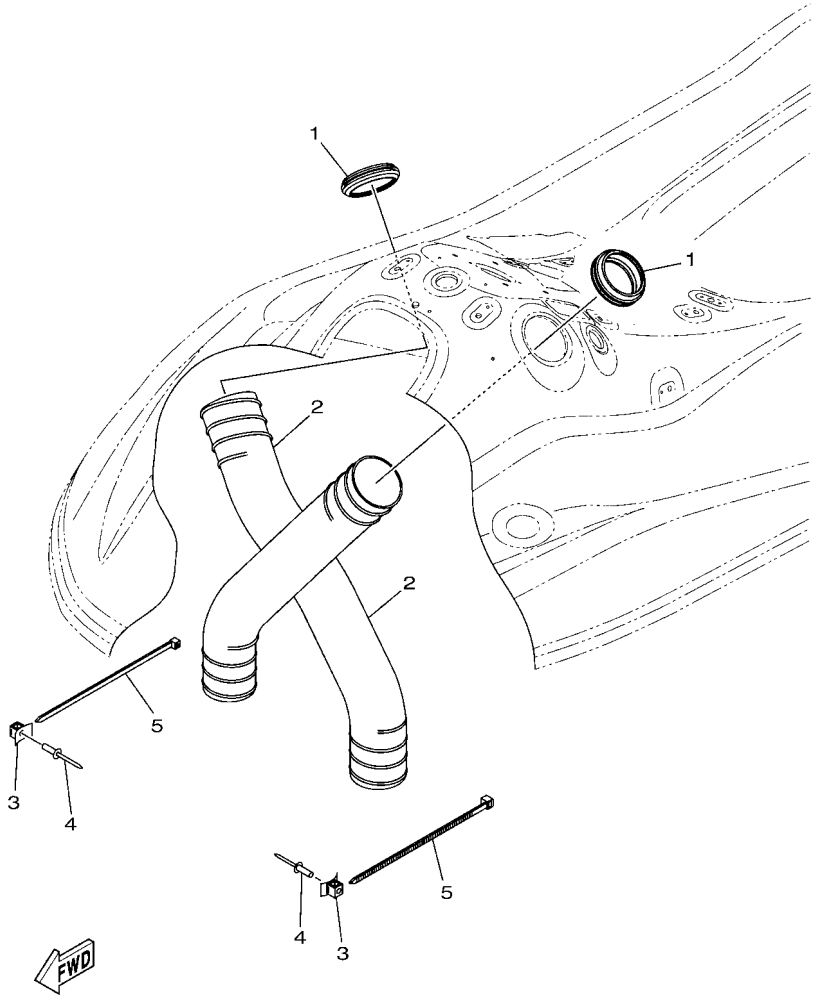

F3Y1100-S240

## FIG. 24 VENTILATION

| REF. NO. | PART NO. | DESCRIPTION | F6N3 | | | | | REMARKS |
|---|---|---|---|---|---|---|---|---|
| 1 | F3Y–U2127–00 | BASE, AIR INTAKE | 2 | | | | | |
| 2 | F3Y–U213G–01 | HOSE, VENTILATOR 2 | 2 | | | | | |
| 3 | F1W–U828M–00 | BASE, CLAMP | 2 | | | | | |
| 4 | 90267–48806 | RIVET, BLIND | 2 | | | | | |
| 5 | 90464–99804 | CLAMP | 2 | | | | | |

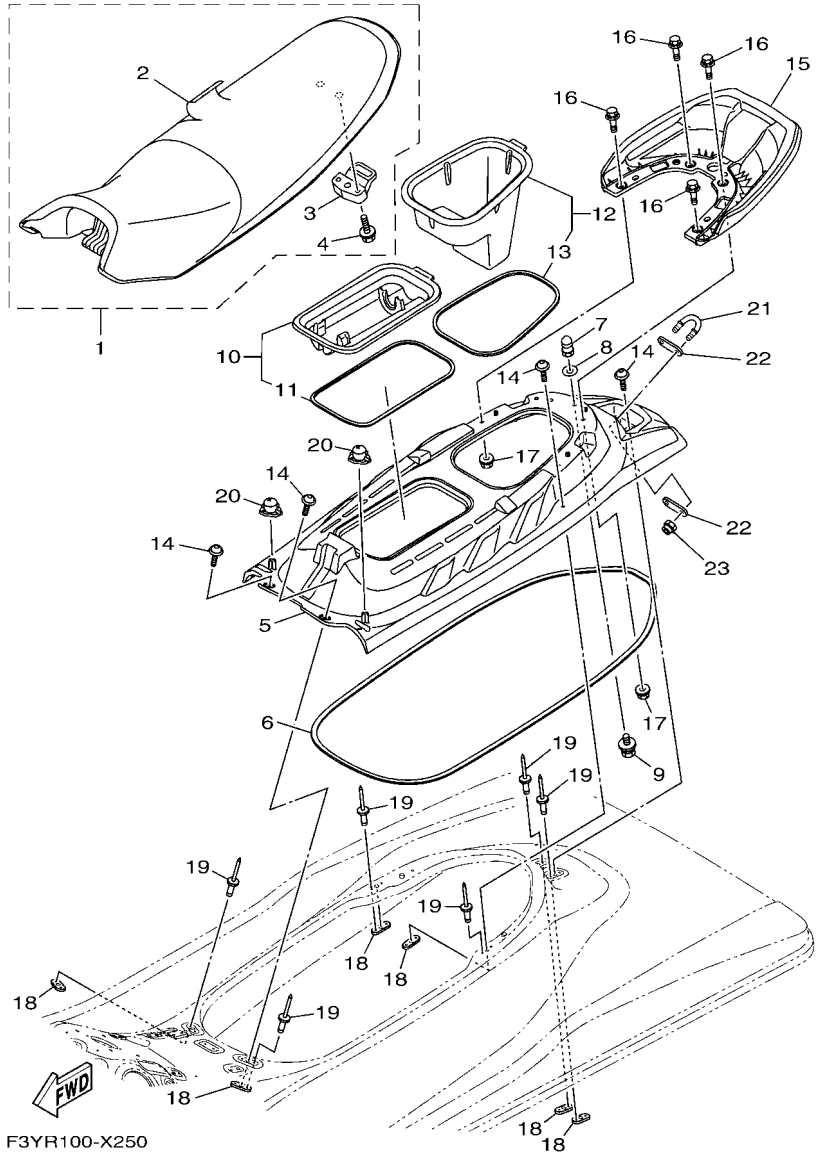


## FIG. 25 SEAT & UNDER LOCKER

| REF. NO. | PART NO. | DESCRIPTION | F6N3 | | | | | REMARKS |
|---|---|---|---|---|---|---|---|---|
| 1 | F3Y–U371A–J0 | DOUBLE SEAT ASSY | 1 | | | | | FOR BLUE |
| | F6N–U371A–30 | DOUBLE SEAT ASSY | 1 | | | | | FOR BLACK |
| 2 | F3Y–U371B–J0 | .COVER, SEAT 1 | 1 | | | | | FOR BLUE |
| | F6N–U371B–30 | .COVER, SEAT 1 | 1 | | | | | FOR BLACK |
| 3 | F1B–U3850–02 | .SEAT LOCK ASSY | 1 | | | | | |
| 4 | 90119–069UP | .BOLT, WITH WASHER | 2 | | | | | |
| 5 | F3Y–U3743–20 | BASE, SEAT 2 | 1 | | | | | FOR BLUE |
| | F3Y–U3743–01 | BASE, SEAT 2 | 1 | | | | | FOR BLACK |
| 6 | F3Y–U266B–01 | PACKING 3 | 1 | | | | | |
| 7 | F1K–U3774–00 | PIN | 1 | | | | | |
| 8 | 90201–109U6 | WASHER, PLATE | 1 | | | | | |
| 9 | 90119–10804 | BOLT, WITH WASHER | 1 | | | | | |
| 10 | F3Y–U592A–10 | CASE ASSY 2 | 1 | | | | | |
| 11 | F3Y–U266D–10 | .PACKING 5 | 1 | | | | | |
| 12 | F3Y–U591A–10 | CASE ASSY 1 | 1 | | | | | |
| 13 | F3Y–U266E–10 | .PACKING,6 | 1 | | | | | |
| 14 | F3Y–U491K–02 | BOLT, SPECIAL | 6 | | | | | |
| 15 | F3Y–U271B–00 | GRIP, HAND | 1 | | | | | |
| 16 | 90119–08829 | BOLT, WITH WASHER | 4 | | | | | |
| 17 | F3Y–U142L–00 | NUT, LOCK | 4 | | | | | |
| 18 | F2C–U826C–00 | BRACKET | 6 | | | | | |
| 19 | 90267–489U1 | RIVET,BLIND | 12 | | | | | |
| 20 | F3Y–U1338–00 | GROMMET | 2 | | | | | |
| 21 | F2N–U1628–10 | STERN EYE | 1 | | | | | |
| 22 | GP7–U4953–10 | PLATE A | 2 | | | | | |
| 23 | 9572R–08300 | NUT, FLANGE | 2 | | | | | |

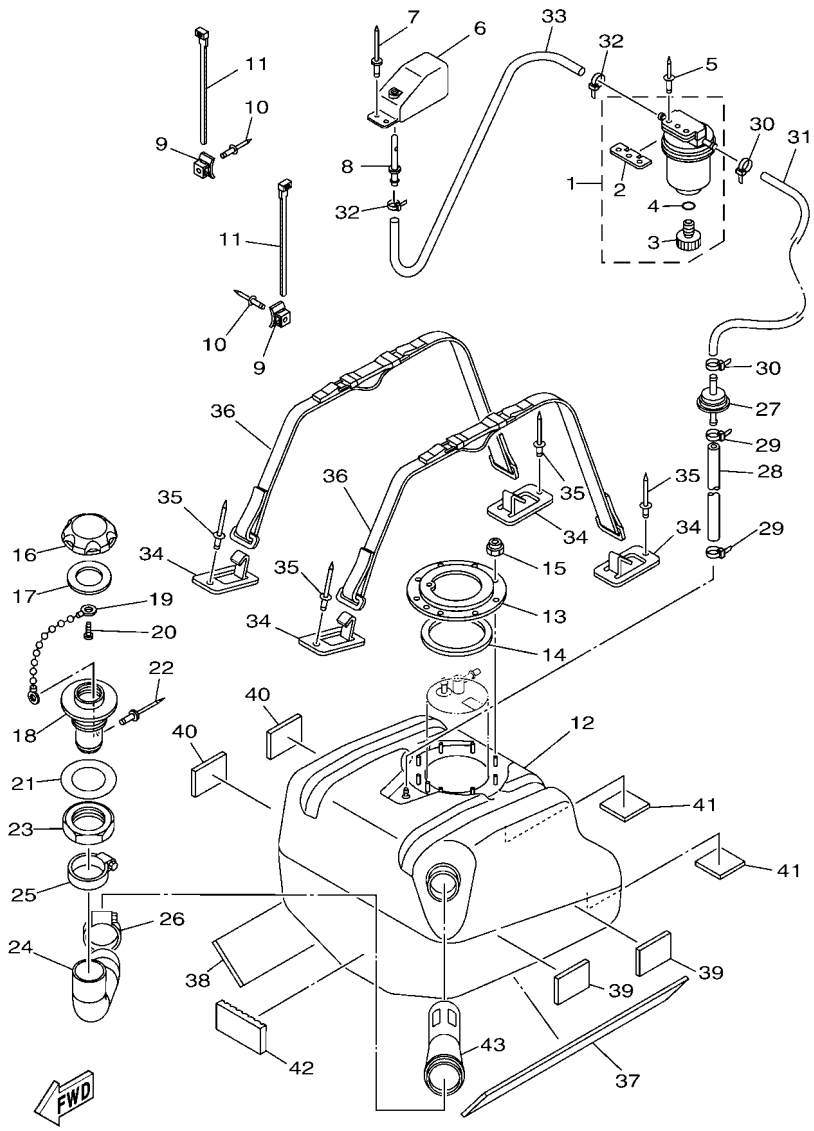


F3YD100-U260

## FIG. 26 FUEL TANK

| REF. NO. | PART NO. | DESCRIPTION | F6N3 | | | | | REMARKS |
|---|---|---|---|---|---|---|---|---|
| 1 | F2F–6214A–00 | FILTER, VENT ASSY | 1 | | | | | |
| 2 | EW2–62142–00 | .PLATE, FILTER | 1 | | | | | |
| 3 | 70R–24543–00 | .PLUG, DRAIN | 1 | | | | | |
| 4 | 70R–24489–00 | .O-RING | 1 | | | | | |
| 5 | 90267–489U2 | RIVET, BLIND | 2 | | | | | |
| 6 | GP7–62159–02 | SOCKET, VENTILATION | 1 | | | | | |
| 7 | 90267–489U6 | RIVET, BLIND | 2 | | | | | |
| 8 | F1G–62149–00 | PIPE, VENTILATION | 1 | | | | | |
| 9 | F1W–U828M–00 | BASE, CLAMP | 2 | | | | | |
| 10 | 90267–48806 | RIVET, BLIND | 2 | | | | | |
| 11 | 90464–32801 | CLAMP | 2 | | | | | |
| 12 | F3Y–U7711–02 | TANK, FUEL | 1 | | | | | |
| 13 | F1B–U7773–00 | RING | 1 | | | | | |
| 14 | F1B–67747–00 | PACKING, SEAL | 1 | | | | | |
| 15 | 9572R–06300 | NUT, NYLON | 9 | | | | | |
| 16 | F2N–U7831–10 | CAP, FUEL FILLER | 1 | | | | | BLACK |
| 17 | GP7–U7832–01 | PACKING | 1 | | | | | |
| 18 | GP7–U7833–11 | SOCKET | 1 | | | | | BLACK |
| 19 | GP7–U7835–00 | CHAIN BALL | 1 | | | | | |
| 20 | 90169–049U1 | SCREW, TRUSS HEAD TAPPING | 1 | | | | | |
| 21 | GP7–U7834–00 | PACKING FUEL FILLER | 1 | | | | | |
| 22 | 90267–329UR | RIVET, BLIND | 1 | | | | | |
| 23 | GP7–U783F–00 | NUT, FUEL FILLER | 1 | | | | | |
| 24 | F3Y–U7844–00 | HOSE | 1 | | | | | |
| 25 | 90601–155U4 | BAND, HOSE 55 | 1 | | | | | |
| 26 | 90601–155U4 | BAND, HOSE 55 | 1 | | | | | |
| 27 | F3Y–U7767–00 | CHECK VALVE | 1 | | | | | |

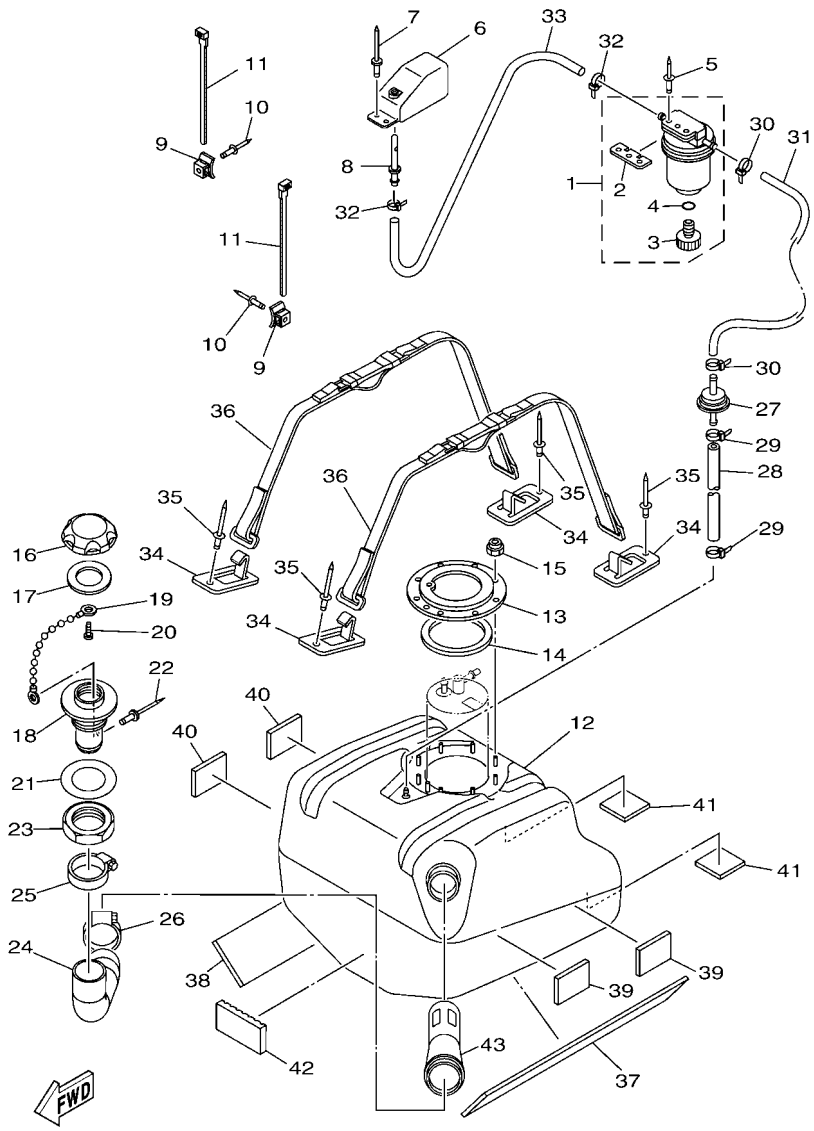


F3YD100-U260

## FIG. 26 FUEL TANK

| REF. NO. | PART NO. | DESCRIPTION | F6N3 | | | | | REMARKS |
|---|---|---|---|---|---|---|---|---|
| 28 | GP7–U785H–00 | HOSE, AIR VENT 3 | 1 | | | | | |
| 29 | 90465–11829 | CLAMP | 2 | | | | | |
| 30 | 90465–11829 | CLAMP | 2 | | | | | |
| 31 | F3Y–U7856–00 | HOSE, AIR VENT 3 | 1 | | | | | |
| 32 | 90465–11829 | CLAMP | 2 | | | | | |
| 33 | GP7–U785G–10 | HOSE, AIR VENT | 1 | | | | | |
| 34 | F1K–U5772–04 | HOOK A | 4 | | | | | |
| 35 | 90267–489U1 | RIVET,BLIND | 4 | | | | | |
| 36 | F3Y–67743–01 | BELT, TANK 1 | 2 | | | | | |
| 37 | F2S–U759B–00 | MAT 1 | 1 | | | | | |
| 38 | F2S–U759B–00 | MAT 1 | 1 | | | | | |
| 39 | F1W–U759C–01 | MAT 2 | 2 | | | | | |
| 40 | F1W–U759C–01 | MAT 2 | 2 | | | | | |
| 41 | F1K–U759C–00 | MAT 2 | 2 | | | | | |
| 42 | F1S–U8221–00 | PAD, BATTERY | 1 | | | | | |
| 43 | F4L–U773D–00 | TUBE | 1 | | | | | |

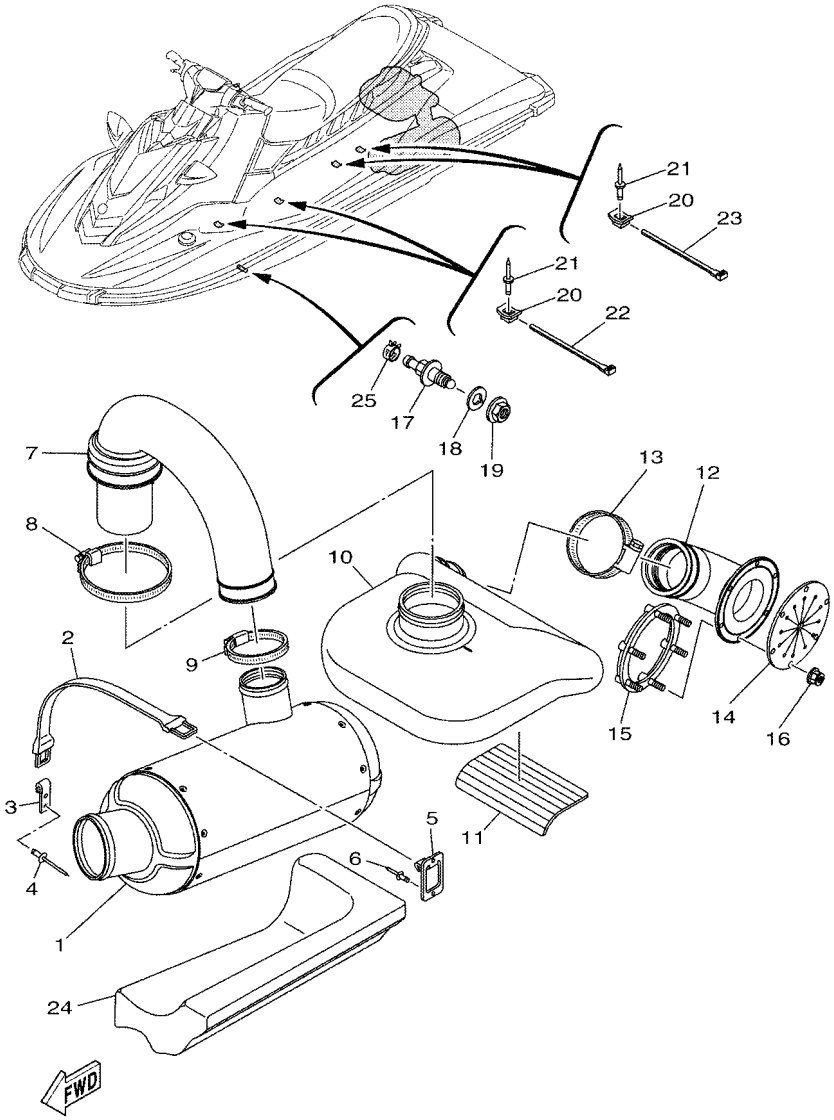


F3YD100-U270

## FIG. 27 EXHAUST 3

| REF. NO. | PART NO. | DESCRIPTION | F6N3 | | | | | REMARKS |
|---|---|---|---|---|---|---|---|---|
| 1 | F3Y–U7550–01 | WATER LOCK COMP. | 1 | | | | | |
| 2 | EU0–U821D–00 | BAND,BATTERY 1 | 1 | | | | | |
| 3 | GA7–65772–00 | HOOK A | 1 | | | | | |
| 4 | 90267–489U1 | RIVET,BLIND | 2 | | | | | |
| 5 | F1K–U5772–04 | HOOK A | 1 | | | | | |
| 6 | 90267–489U1 | RIVET,BLIND | 1 | | | | | |
| 7 | F3Y–U7555–00 | HOSE, EXHAUST | 1 | | | | | |
| 8 | 90601–179U8 | BAND, HOSE 79 | 1 | | | | | |
| 9 | 90450–99804 | HOSE CLAMP ASSY | 1 | | | | | |
| 10 | F3Y–U4261–00 | TANK, WATER | 1 | | | | | |
| 11 | F1S–U8221–00 | PAD, BATTERY | 1 | | | | | |
| 12 | F3Y–U758D–00 | HOSE,EXHAUST 3 | 1 | | | | | |
| 13 | 90601–179U8 | BAND, HOSE 79 | 1 | | | | | |
| 14 | F1B–U751G–10 | VALVE, EXHAUST | 1 | | | | | |
| 15 | F1S–U757B–01 | PLATE | 1 | | | | | |
| 16 | F2N–U142L–00 | NUT, LOCK | 6 | | | | | |
| 17 | F2C–U753B–01 | PILOT, WATER | 1 | | | | | |
| 18 | F2C–U7564–01 | GASKET | 1 | | | | | |
| 19 | F2C–U2733–00 | NUT | 1 | | | | | |
| 20 | F1W–U828M–00 | BASE, CLAMP | 4 | | | | | |
| 21 | 90267–48806 | RIVET, BLIND | 4 | | | | | |
| 22 | 90464–32801 | CLAMP | 2 | | | | | |
| 23 | 90601–200U2 | BAND | 2 | | | | | |
| 24 | F3Y–U892F–00 | FLOATATION, BASE 1 | 1 | | | | | |
| 25 | 90467–150A5 | CLIP | 1 | | | | | |

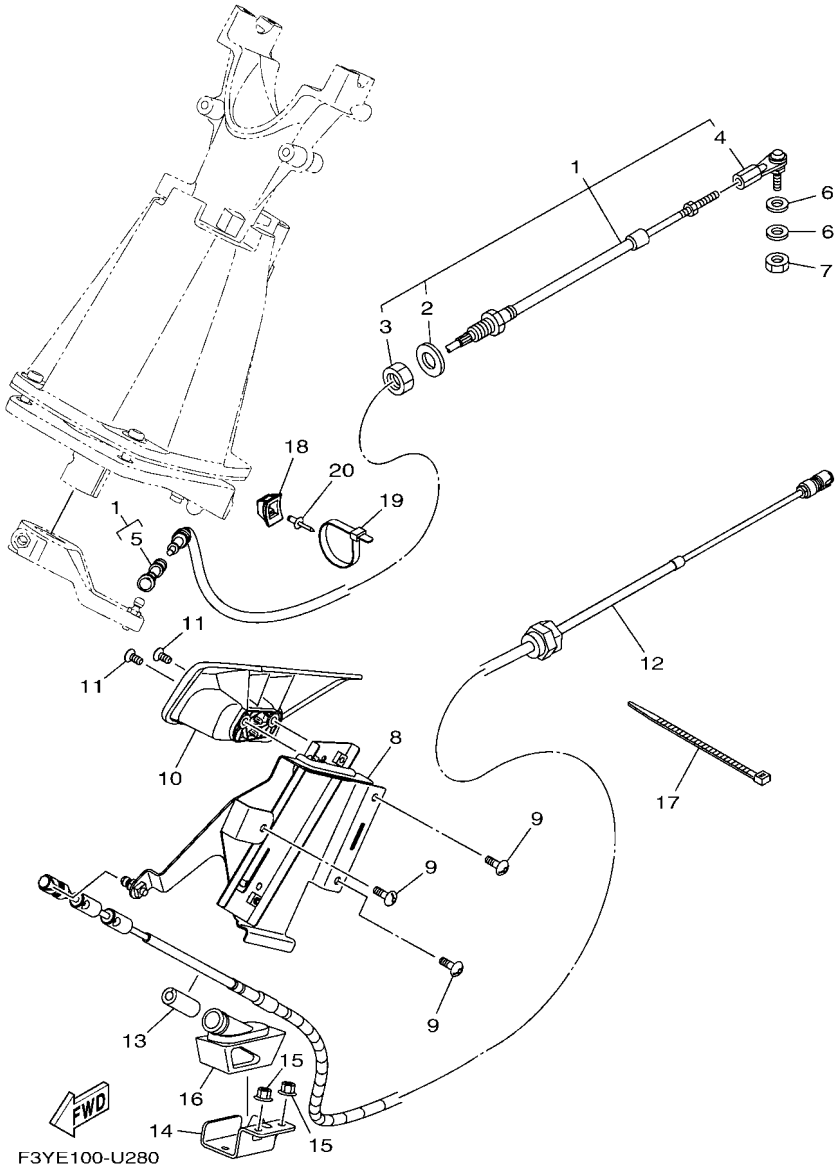


## FIG. 28 CONTROL CABLE

| REF. NO. | PART NO. | DESCRIPTION | F6N3 | | | | | REMARKS |
|---|---|---|---|---|---|---|---|---|
| 1 | F3Y–61481–04 | CABLE, STEERING | 1 | | | | | |
| 2 | F1B–61438–00 | .PACKING C | 1 | | | | | |
| 3 | F1B–6151S–01 | .NUT | 1 | | | | | |
| 4 | F3Y–61461–10 | .STUD, JOINT BALL | 1 | | | | | |
| 5 | F2N–61460–00 | .BALL JOINT ASSY | 1 | | | | | |
| 6 | 90201–06906 | WASHER, PLATE | 2 | | | | | |
| 7 | 9538R–06700 | NUT | 1 | | | | | |
| 8 | F3Y–U134A–00 | REMOCON. LEVER ASSY. | 1 | | | | | |
| 9 | 90111–06874 | BOLT, HEXAGON SOCKET BUTTON | 3 | | | | | |
| 10 | F3Y–U2714–11 | GRIP | 1 | | | | | FOR BLUE |
| | F3Y–U2714–00 | GRIP | 1 | | | | | FOR BLACK |
| 11 | 90151–06815 | SCREW, COUNTERSUNK | 2 | | | | | |
| 12 | F3Y–U149C–01 | CABLE,REVERSE | 1 | | | | | |
| 13 | F1W–U146G–00 | PACKING, CABLE | 1 | | | | | |
| 14 | F3Y–U1467–10 | BRACKET,STOPPER CABLE | 1 | | | | | |
| 15 | F2N–U142L–00 | NUT, LOCK | 2 | | | | | |
| 16 | F3Y–U146G–00 | PACKING, CABLE | 1 | | | | | |
| 17 | 90465–11829 | CLAMP | 1 | | | | | |
| 18 | F1W–U828M–00 | BASE, CLAMP | 1 | | | | | |
| 19 | 90464–32801 | CLAMP | 1 | | | | | |
| 20 | 90267–48806 | RIVET, BLIND | 1 | | | | | |

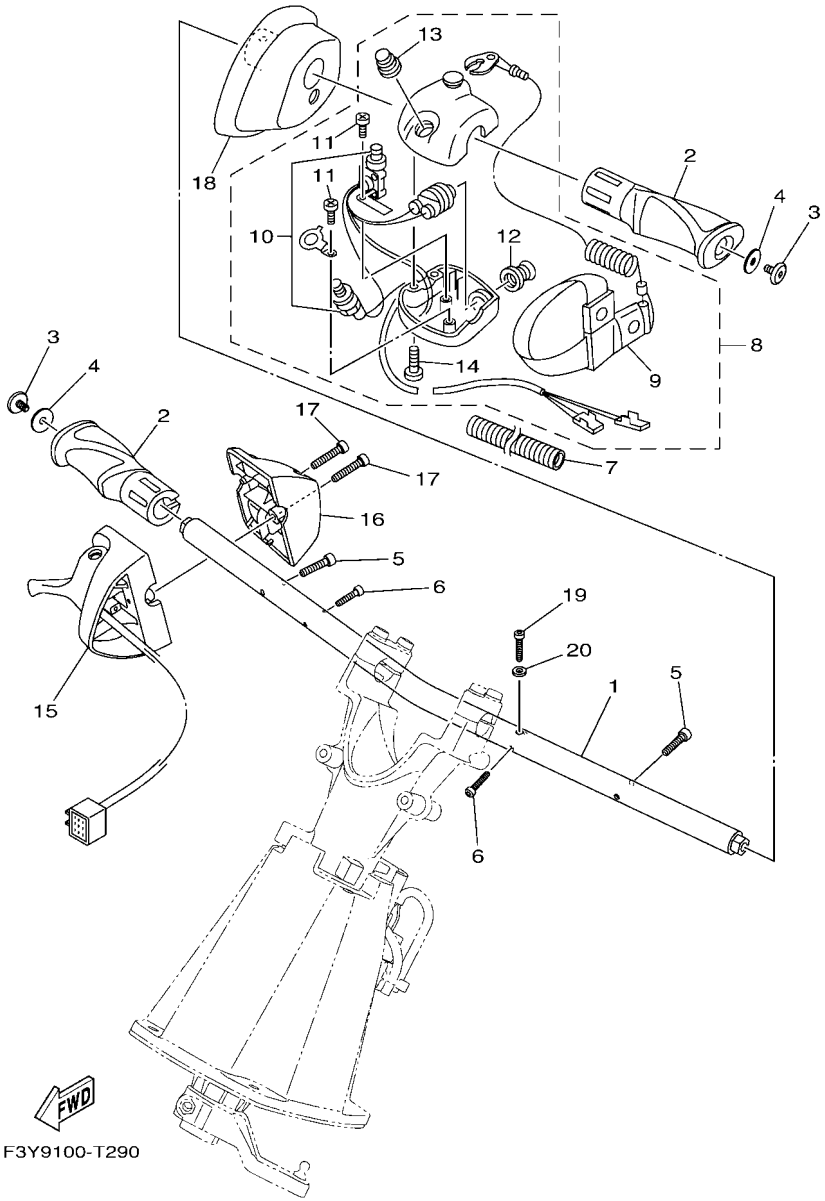


## FIG. 29 STEERING 1

| REF. NO. | PART NO. | DESCRIPTION | F6N3 | | | | | REMARKS |
|---|---|---|---|---|---|---|---|---|
| 1 | F3Y–U1552–00 | HANDLE | 1 | | | | | |
| 2 | F3P–U155D–01 | GRIP, HANDLE | 2 | | | | | FOR BLUE |
| | F3P–U155D–11 | GRIP, HANDLE | 2 | | | | | FOR BLACK |
| 3 | 90110–06382 | BOLT, HEXAGON SOCKET HEAD | 2 | | | | | |
| 4 | 90201–068G0 | WASHER, PLATE | 2 | | | | | |
| 5 | F2S–U1516–00 | BOLT | 2 | | | | | |
| 6 | 91380–04030 | BOLT | 1 | | | | | |
| 7 | F3Y–U773D–00 | TUBE | 1 | | | | | |
| 8 | F3Y–68310–00 | SWITCH BOX ASSY | 1 | | | | | |
| 9 | EW2–68348–00 | .LANYARD, STOP SWITCH | 1 | | | | | |
| 10 | FK7–68311–02 | .SWITCH SUB ASSY | 1 | | | | | |
| 11 | 97880–03008 | .SCREW, PAN HEAD | 2 | | | | | |
| 12 | FK7–68312–02 | .STOP BUTTON COMP | 1 | | | | | |
| 13 | FK7–68313–02 | .START BUTTON COMP. | 1 | | | | | |
| 14 | 97880–05025 | .SCREW, PAN HEAD | 2 | | | | | |
| 15 | 6CS–14305–13 | THROTTLE LEVER COMP | 1 | | | | | |
| 16 | 6EX–82154–00 | CASE | 1 | | | | | |
| 17 | 6CS–6725F–00 | BOLT, THROTTLE | 2 | | | | | |
| 18 | F3Y–U143G–00 | SPACER | 1 | | | | | |
| 19 | 91380–04030 | BOLT | 1 | | | | | |
| 20 | 90201–04810 | WASHER, PLATE | 1 | | | | | |

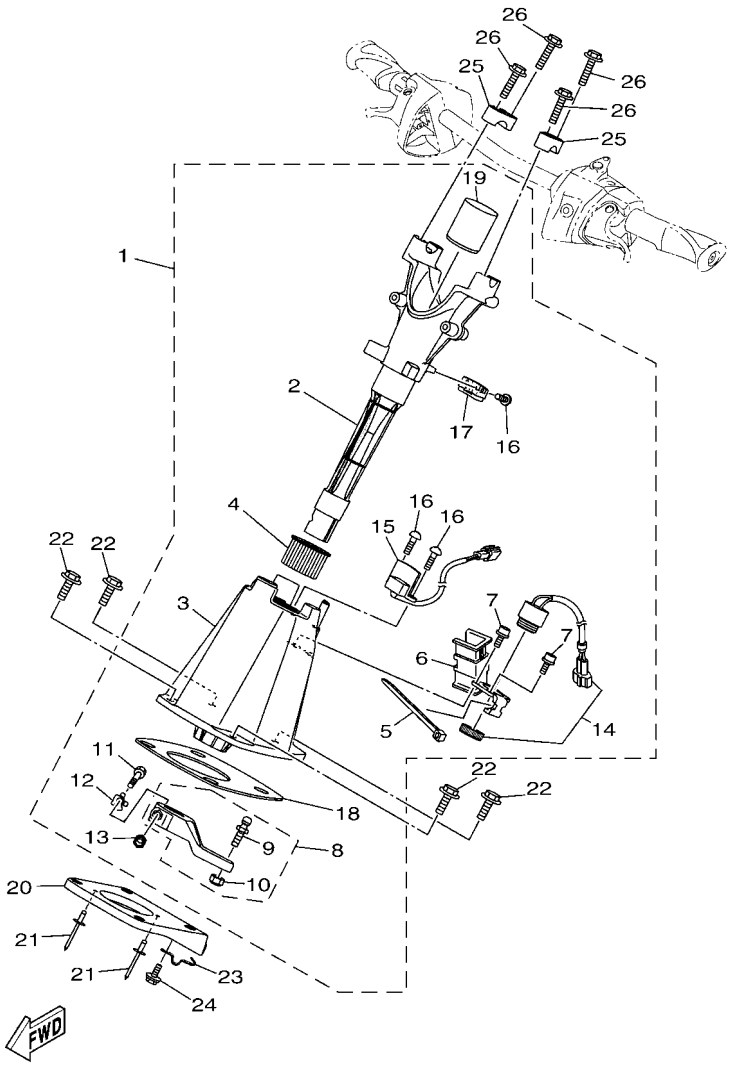


F3Y1100-S300

## FIG. 30 STEERING 2

| REF. NO. | PART NO. | DESCRIPTION | F6N3 | | | | | REMARKS |
|---|---|---|---|---|---|---|---|---|
| 1 | F3Y–61400–04 | STEERING MASTER ASSY | 1 | | | | | |
| 2 | F3Y–6152D–00 | .SHAFT | 1 | | | | | |
| 3 | F2X–6152M–02 | .HOUSING ASSY | 1 | | | | | |
| 4 | F1K–6134M–00 | .BUSH | 1 | | | | | |
| 5 | 703–82591–00 | .BAND | 1 | | | | | |
| 6 | F2X–6146H–00 | .SPACER, BRKT. | 1 | | | | | |
| 7 | F1B–613C1–00 | .SCREW | 2 | | | | | |
| 8 | F1K–6153R–01 | .ARM ASSY. | 1 | | | | | |
| 9 | EU0–61461–02 | ..STUD, JOINT BALL | 1 | | | | | |
| 10 | 95720–06300 | ..NUT, SELF-LOCKING | 1 | | | | | |
| 11 | F1K–61355–00 | .BOLT | 1 | | | | | |
| 12 | F1K–6142B–00 | .PLATE, RETAINING | 1 | | | | | |
| 13 | 95720–08300 | .NUT, SELF-LOCKING | 1 | | | | | |
| 14 | F1S–68341–00 | .BUZZER | 1 | | | | | |
| 15 | F2X–6838B–02 | .SENSOR, MAGNET | 1 | | | | | |
| 16 | F2X–613C1–00 | .SCREW | 3 | | | | | |
| 17 | F2X–6838C–01 | .MAGNET | 1 | | | | | |
| 18 | F1K–6143C–00 | .SEAL, RUBBER | 1 | | | | | |
| 19 | F2X–61435–00 | .PIPE, SEAL | 1 | | | | | |
| 20 | F3Y–U1467–00 | BRACKET,STOPPER CABLE | 1 | | | | | |
| 21 | 90267–489U2 | RIVET, BLIND | 2 | | | | | |
| 22 | 90119–08836 | BOLT, WITH WASHER | 4 | | | | | |
| 23 | F1K–U1468–03 | STOPPER, CABLE | 1 | | | | | |
| 24 | 90119–069UH | BOLT, WITH WASHER | 1 | | | | | |
| 25 | EU0–23814–31 | HOLDER, HANDLE UPPER | 2 | | | | | |
| 26 | 90119–08827 | BOLT, WITH WASHER | 4 | | | | | |

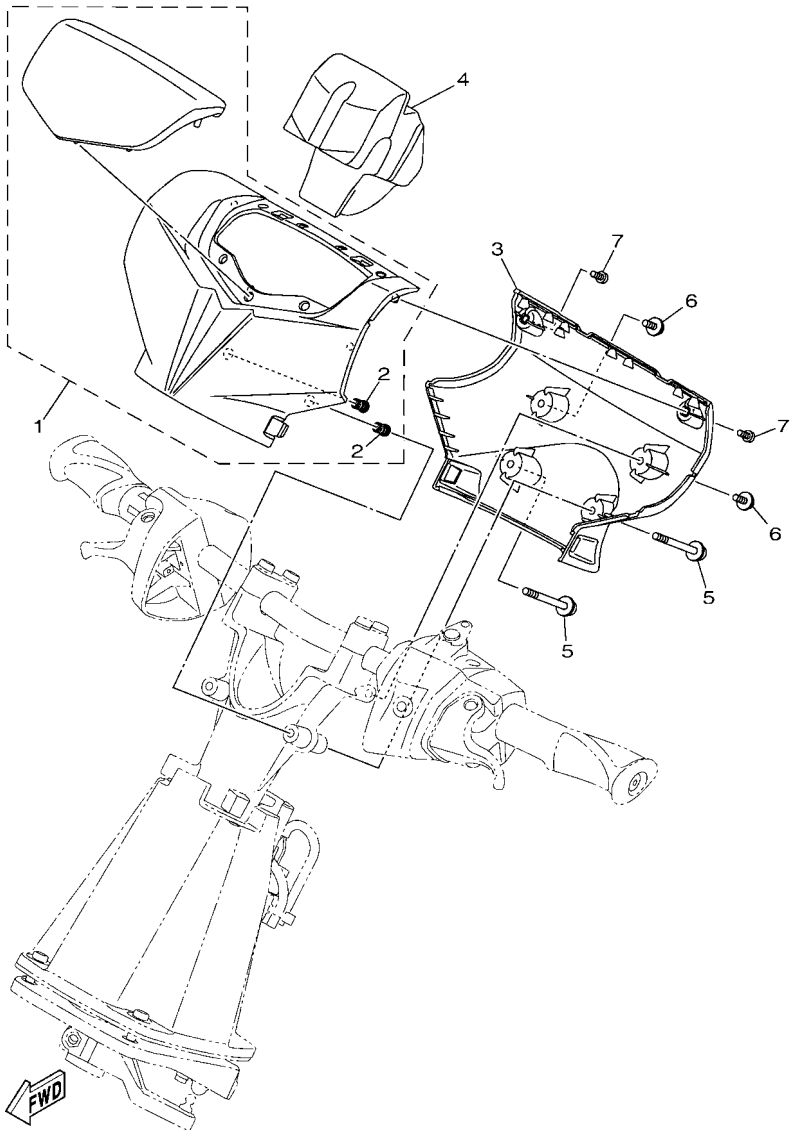


F3Y7100-T310

## FIG. 31 STEERING 3

| REF. NO. | PART NO. | DESCRIPTION | F6N3 | | | | | REMARKS |
|---|---|---|---|---|---|---|---|---|
| 1 | F3Y–U1421–81 | PAD, STEERING | 1 | | | | | |
| 2 | F3Y–U517E–00 | .NUT | 2 | | | | | |
| 3 | F3Y–U143E–00 | PAD, STEERING 2 | 1 | | | | | |
| 4 | F3Y–U156E–00 | PAD 1 | 1 | | | | | |
| 5 | F3Y–U1355–01 | BOLT | 2 | | | | | |
| 6 | F3Y–U2624–00 | BOLT | 2 | | | | | |
| 7 | F2S–U13C1–00 | SCREW | 2 | | | | | |

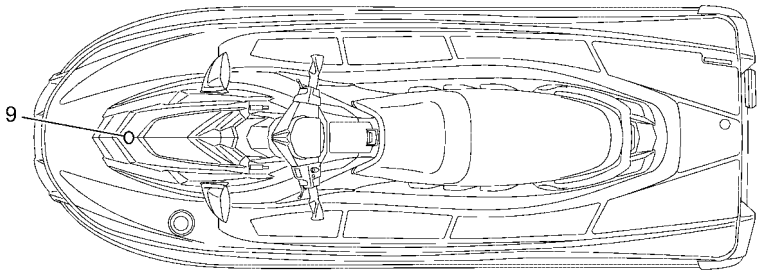


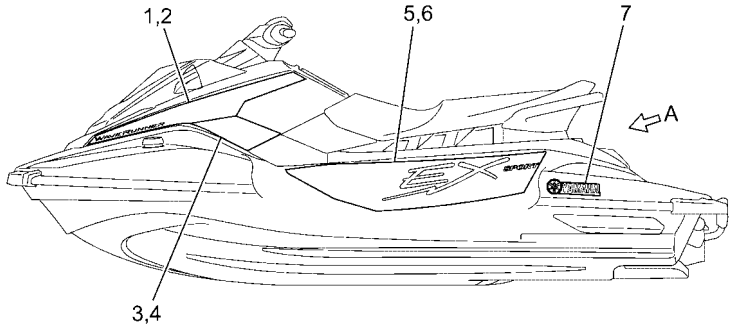


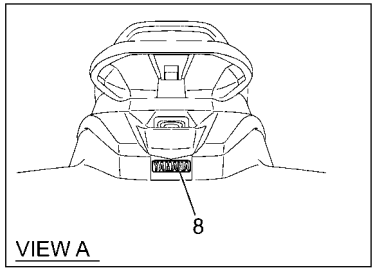

F6N3100-Z320

## FIG. 32 GRAPHICS

| REF. NO. | PART NO. | DESCRIPTION | F6N3 | | | | | REMARKS |
|---|---|---|---|---|---|---|---|---|
| 1 | F6N–U417D–30 | GRAPHIC 3 (LH) | 1 | | | | | FOR BLUE |
| | F6N–U417D–40 | GRAPHIC 3 (LH) | 1 | | | | | FOR BLACK |
| 2 | F6N–U417E–30 | GRAPHIC 4 (RH) | 1 | | | | | FOR BLUE |
| | F6N–U417E–40 | GRAPHIC 4 (RH) | 1 | | | | | FOR BLACK |
| 3 | F6N–U417F–30 | GRAPHIC 5 (LH) | 1 | | | | | FOR BLUE |
| | F6N–U417F–40 | GRAPHIC 5 (LH) | 1 | | | | | FOR BLACK |
| 4 | F6N–U417G–30 | GRAPHIC 6 (RH) | 1 | | | | | FOR BLUE |
| | F6N–U417G–40 | GRAPHIC 6 (RH) | 1 | | | | | FOR BLACK |
| 5 | F6N–U417H–30 | GRAPHIC 7 (LH) | 1 | | | | | FOR BLUE |
| | F6N–U417H–40 | GRAPHIC 7 (LH) | 1 | | | | | FOR BLACK |
| 6 | F6N–U417J–30 | GRAPHIC 8 (RH) | 1 | | | | | FOR BLUE |
| | F6N–U417J–40 | GRAPHIC 8 (RH) | 1 | | | | | FOR BLACK |
| 7 | F4S–U411C–40 | EMBLEM, YAMAHA | 2 | | | | | FOR BLUE |
| | F2W–U411C–D0 | EMBLEM, YAMAHA | 2 | | | | | FOR BLACK |
| 8 | F6C–U4114–00 | MARK, YAMAHA A | 1 | | | | | FOR BLUE |
| | F2W–U4114–D0 | MARK, YAMAHA A | 1 | | | | | FOR BLACK |
| 9 | F3Y–U411H–02 | EMBLEM, TUNING FORK | 1 | | | | | |
| 10 | F3Y–U5901–00 | BAG, VINYL | 1 | | | | | |

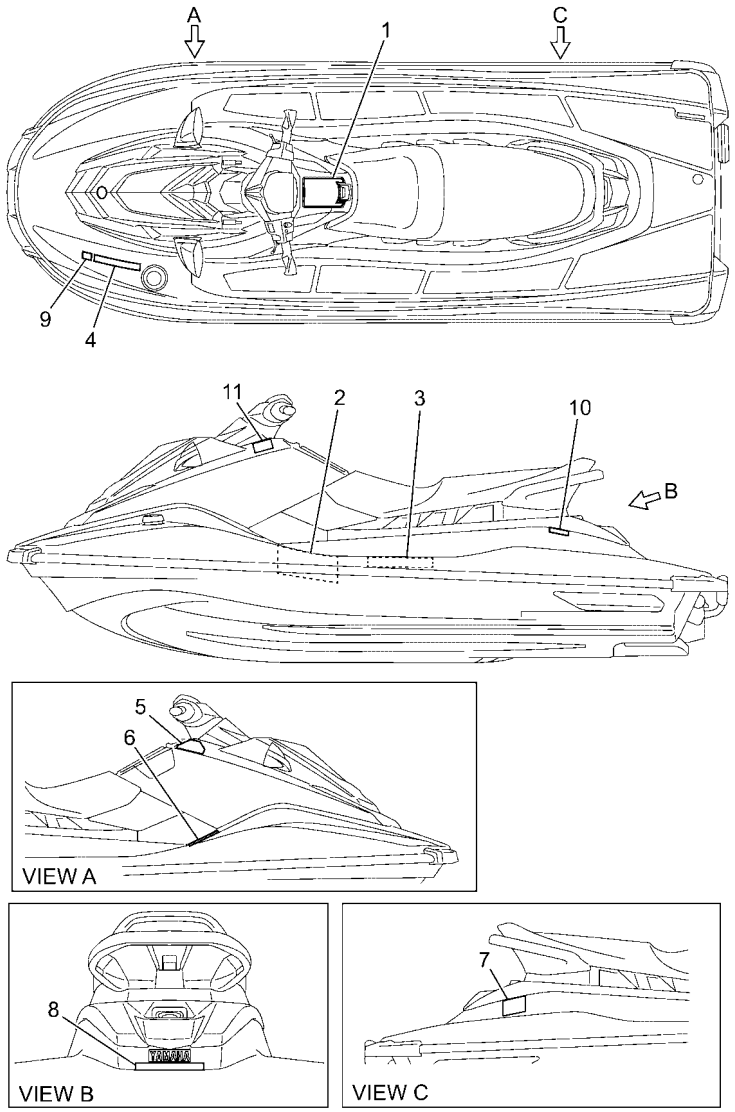


F6N3100-Z330

## FIG. 33 IMPORTANT LABELS

| REF. NO. | PART NO. | DESCRIPTION | F6N3 | | | | | REMARKS |
|---|---|---|---|---|---|---|---|---|
| 1 | F3Y–U41B1–30 | LABEL, WARNING UNIFORM 1 | 1 | | | | | |
| 2 | F3V–U41B1–00 | LABEL, WARNING UNIFORM 1 | 1 | | | | | |
| 3 | F3V–U41B1–20 | LABEL, WARNING UNIFORM 1 | 1 | | | | | |
| 4 | F3Y–U415B–10 | LABEL, WARNING(FUEL) | 1 | | | | | |
| 5 | F3K–U41D5–10 | LABEL, WARNING SHIFT LEVER | 1 | | | | | FOR BLUE |
| | F3K–U41D5–30 | LABEL, WARNING SHIFT LEVER | 1 | | | | | FOR BLACK |
| 6 | F1B–U41F5–21 | LABEL, FIRE EXTINGUISHER 1 | 1 | | | | | |
| 7 | F3V–U416A–10 | WARNING LABEL ASSY. | 1 | | | | | |
| 8 | F4E–U41E1–30 | LABEL, SET 1 | 1 | | | | | |
| 9 | B4F–F817K–00 | LABEL, FUEL | 1 | | | | | FOR EUR |
| 10 | F1S–U419E–01 | LABEL 4 | 1 | | | | | FOR CAN |
| 11 | F3Y–U413P–40 | LABEL, BUILDERS PLATE | 1 | | | | | FOR BLUE EUR |
| | F3Y–U413P–30 | LABEL, BUILDERS PLATE | 1 | | | | | FOR BLACK EUR |

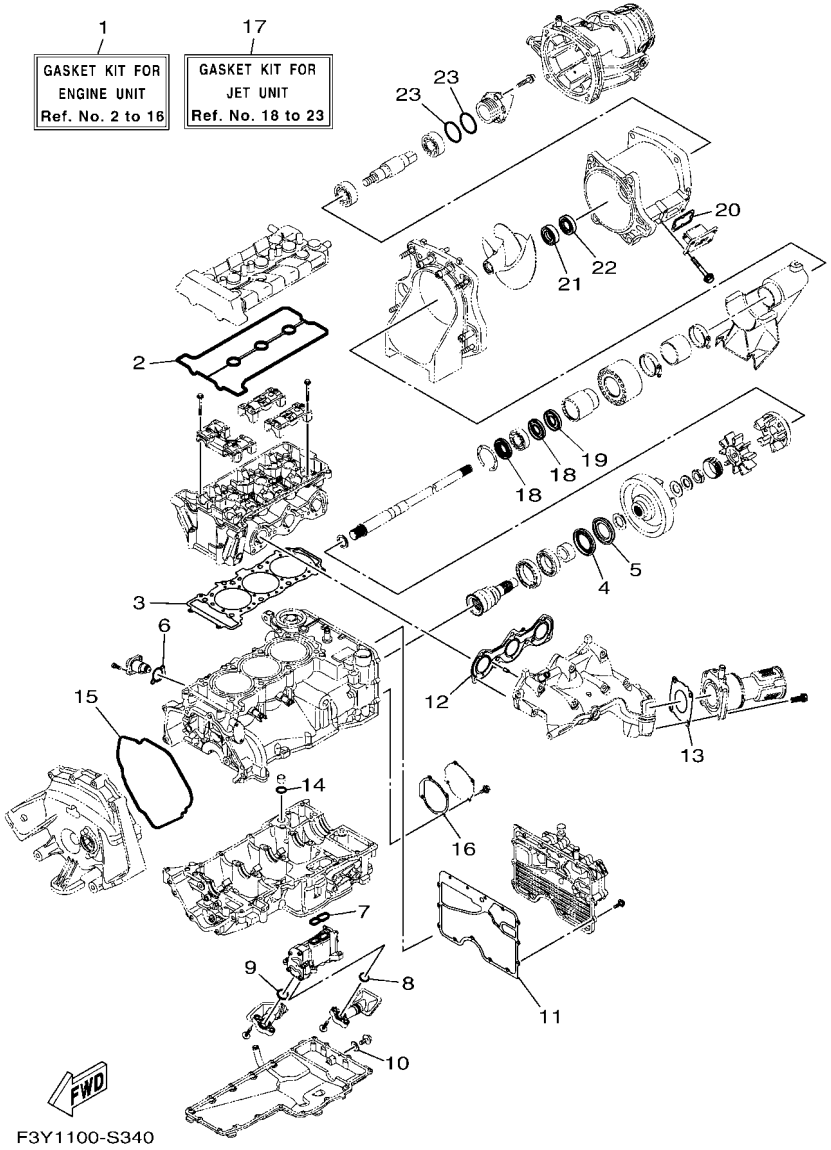


## FIG. 34 REPAIR KIT 1

| REF. NO. | PART NO. | DESCRIPTION | F6N3 | | | | | REMARKS |
|---|---|---|---|---|---|---|---|---|
| 1 | 6GA–W0001–01 | GASKET KIT FOR ENGINE UNIT | 1 | | | | | |
| 2 | 6EY–11193–00 | .GASKET, HEAD COVER 1 | 1 | | | | | |
| 3 | 6EY–11181–00 | .GASKET, CYLINDER HEAD 1 | 1 | | | | | |
| 4 | 93101–40001 | .OIL SEAL | 1 | | | | | |
| 5 | 93101–40002 | .OIL SEAL | 1 | | | | | |
| 6 | 2C0–12213–00 | .GASKET, TENSIONER CASE | 1 | | | | | |
| 7 | 6EY–13563–00 | .GASKET | 1 | | | | | |
| 8 | 6EY–13477–00 | .GASKET | 1 | | | | | |
| 9 | 6EY–13476–00 | .GASKET | 1 | | | | | |
| 10 | 90430–08209 | .GASKET | 1 | | | | | |
| 11 | 6EY–15453–00 | .GASKET | 1 | | | | | |
| 12 | 6GA–14613–00 | .GASKET, EXHAUST PIPE | 1 | | | | | |
| 13 | 6GA–14739–00 | .GASKET, MUFFLER DAMPER 1 | 1 | | | | | |
| 14 | 93210–17010 | .O-RING | 1 | | | | | |
| 15 | 6EY–15461–00 | .GASKET, CRANKCASE COVER 2 | 1 | | | | | |
| 16 | 6EY–15463–01 | .GASKET, 2 | 1 | | | | | |
| 17 | 6GA–W0001–20 | GASKET KIT FOR JET UNIT | 1 | | | | | |
| 18 | 93101–25M55 | .OIL SEAL | 2 | | | | | |
| 19 | 93101–25M56 | .OIL SEAL | 1 | | | | | |
| 20 | 6GA–G2414–00 | .O-RING | 1 | | | | | |
| 21 | 93102–25M34 | .OIL SEAL | 1 | | | | | |
| 22 | 93101–25M50 | .OIL SEAL | 1 | | | | | |
| 23 | 93210–44003 | .O-RING | 2 | | | | | |

| PART NO. | REF. NO. |
|---|---|
| 6EY–11102–00 | 1 – 2 |
| 6EY–11110–00 | 1 – 1 |
| 6EY–11119–00 | 1 – 20 |
| 6EY–1111E–10 | 1 – 18 |
| 5VY–1111G–00 | 1 – 15 |
| 6EY–11125–00 | 8 – 25 |
| 6EY–11126–10 | 8 – 27 |
| 2C0–11133–11 | 1 – 3 |
| 8HF–11134–10 | 1 – 4 |
| 6EY–11164–00 | 8 – 20 |
| 6EY–11166–10 | 8 – 16 |
| 6EY–11181–00 | 1 – 16 |
| | 34 – 3 |
| 6EY–11191–10 | 1 – 9 |
| 6EY–11193–00 | 1 – 11 |
| | 34 – 2 |
| 69J–11301–11 | 2 – 22 |
| 68V–11325–02 | 2 – 23 |
| 67F–11328–01 | 2 – 24 |
| 6EY–11400–00 | 3 – 1 |
| 6EY–11406–10 | 3 – 14 |
| 2HC–11407–00 | 3 – 25 |
| 3LD–11416–10 | 3 – 6 |
| 3LD–11416–20 | 3 – 6 |
| 3LD–11416–30 | 3 – 6 |
| 3LD–11416–40 | 3 – 6 |
| 3LD–11416–50 | 3 – 6 |
| 3LD–11416–60 | 3 – 6 |
| 3LD–11416–70 | 3 – 6 |
| 8ES–11428–01 | 2 – 8 |
| 8ES–11454–00 | 3 – 27 |
| 2HC–11464–00 | 3 – 30 |
| 6EY–11478–00 | 3 – 29 |
| 6EY–11531–00 | 3 – 26 |
| 6JF–11571–00 | 3 – 20 |
| 8KH–11603–02 | 3 – 8 |
| 8KH–11631–00 | 3 – 7 |
| 6EY–11633–00 | 3 – 9 |
| B0F–11650–00 | 3 – 2 |
| 5JW–11654–00 | 3 – 3 |
| 5JW–11656–00 | 3 – 5 |
| 5JW–11656–10 | 3 – 5 |
| 5JW–11656–20 | 3 – 5 |
| 5JW–11656–30 | 3 – 5 |
| 5JW–11656–40 | 3 – 5 |
| 5JW–11656–50 | 3 – 5 |
| 6EY–11917–10 | 3 – 17 |
| 8GL–12111–10 | 4 – 5 |

| PART NO. | REF. NO. |
|---|---|
| 8GL–12113–00 | 4 – 8 |
| 1RC–12116–00 | 4 – 7 |
| 3D7–12117–00 | 4 – 9 |
| 1WG–12118–00 | 4 – 10 |
| 2HC–12119–00 | 4 – 11 |
| 8GL–12121–10 | 4 – 6 |
| 6EY–12153–01 | 4 – 13 |
| 1HX–12168–00 | 4 – 12 |
| 1HX–12168–20 | 4 – 12 |
| 1HX–12168–40 | 4 – 12 |
| 1HX–12168–60 | 4 – 12 |
| 1HX–12168–80 | 4 – 12 |
| 1HX–12168–A0 | 4 – 12 |
| 1HX–12168–F0 | 4 – 12 |
| 1HX–12168–H1 | 4 – 12 |
| 1HX–12168–K1 | 4 – 12 |
| 1HX–12168–M1 | 4 – 12 |
| 1HX–12168–R1 | 4 – 12 |
| 1HX–12168–U1 | 4 – 12 |
| 1HX–12168–W1 | 4 – 12 |
| 1HX–12168–Y1 | 4 – 12 |
| 1HX–12169–11 | 4 – 12 |
| 1HX–12169–31 | 4 – 12 |
| 1HX–12169–50 | 4 – 12 |
| 1HX–12169–70 | 4 – 12 |
| 1HX–12169–90 | 4 – 12 |
| 1HX–12169–E0 | 4 – 12 |
| 1HX–12169–G0 | 4 – 12 |
| 1HX–12169–J0 | 4 – 12 |
| 1HX–12169–L0 | 4 – 12 |
| 1HX–12169–N0 | 4 – 12 |
| 1HX–12169–T0 | 4 – 12 |
| 6EY–12170–00 | 4 – 1 |
| 2HC–12176–00 | 4 – 3 |
| 6EY–12180–00 | 4 – 2 |
| 8KH–12210–00 | 4 – 15 |
| 2C0–12213–00 | 4 – 16 |
| | 34 – 6 |
| 5BE–12241–01 | 1 – 10 |
| 6EY–12251–00 | 4 – 18 |
| 2HC–12252–00 | 4 – 19 |
| 6EY–12279–00 | 4 – 21 |
| 6D3–12411–00 | 10 – 27 |
| 6EY–12413–00 | 10 – 28 |
| 6EY–12577–00 | 10 – 21 |
| 6S5–12579–00 | 10 – 23 |
| 6EY–12580–00 | 10 – 3 |
| 6EY–12584–00 | 10 – 8 |

| PART NO. | REF. NO. |
|---|---|
| 6EY–12880–01 | 5 – 8 |
| 8ES–13284–00 | 2 – 17 |
| 6EY–13300–00 | 7 – 1 |
| 6EY–13355–00 | 7 – 2 |
| 6EY–13405–00 | 7 – 5 |
| 6EY–13406–00 | 7 – 8 |
| 6EY–13417–10 | 7 – 18 |
| 5GH–13440–80 | 7 – 17 |
| 6EY–13455–00 | 7 – 20 |
| 6EY–13470–01 | 8 – 2 |
| 6EY–13476–00 | 7 – 9 |
| | 34 – 9 |
| 6EY–13477–00 | 7 – 6 |
| | 34 – 8 |
| 6EY–13532–00 | 5 – 13 |
| 6EY–13556–00 | 8 – 3 |
| 8FP–13556–10 | 5 – 11 |
| 6EY–13557–00 | 8 – 5 |
| 6EY–13563–00 | 7 – 4 |
| | 34 – 7 |
| 6EY–13641–03 | 5 – 2 |
| 6EY–13750–00 | 5 – 1 |
| 2HC–13761–00 | 5 – 5 |
| 6S5–13907–05 | 18 – 1 |
| 6EY–14126–00 | 5 – 4 |
| 6EY–14156–00 | 5 – 3 |
| 68V–1416A–00 | 5 – 6 |
| 6CS–14305–13 | 29 – 15 |
| 6EY–14410–10 | 6 – 7 |
| 6EY–14419–00 | 6 – 12 |
| 6EY–14436–00 | 6 – 11 |
| 6BH–14445–00 | 5 – 12 |
| 6EY–14451–00 | 6 – 8 |
| 6EY–14452–00 | 6 – 10 |
| 6EY–14462–00 | 6 – 9 |
| 6EY–14470–01 | 6 – 16 |
| 6EY–14485–00 | 6 – 13 |
| 6GA–14613–00 | 9 – 1 |
| | 34 – 12 |
| 6GA–1469W–00 | 9 – 8 |
| 6GA–14711–00 | 9 – 2 |
| 6GA–14739–00 | 9 – 6 |
| | 34 – 13 |
| 6GA–14752–00 | 9 – 13 |
| 6GA–14784–00 | 9 – 7 |
| 6EY–15109–09 | 2 – 2 |
| 6EY–15362–10 | 8 – 14 |
| 3Y1–15363–10 | 1 – 12 |

| PART NO. | REF. NO. |
|---|---|
| 4JT–15381–01 | 2 – 6 |
| 6EY–15421–00 | 2 – 18 |
| 6EY–15453–00 | 8 – 1 |
| | 34 – 11 |
| 6EY–15461–00 | 2 – 19 |
| | 34 – 15 |
| 6EY–15463–01 | 2 – 29 |
| | 34 – 16 |
| 6EY–15486–00 | 7 – 14 |
| 2HC–15512–00 | 14 – 2 |
| 8FA–15515–00 | 14 – 1 |
| 8ES–15521–00 | 14 – 3 |
| 6EY–15589–01 | 2 – 28 |
| 6EY–15590–00 | 14 – 4 |
| EU0–23814–31 | 30 – 25 |
| 70R–24489–00 | 26 – 4 |
| 6CN–2450B–10 | 5 – 16 |
| 70R–24543–00 | 26 – 3 |
| 6EY–24864–00 | 10 – 19 |
| 6EX–2812A–00 | 16 – 25 |
| 6EY–41661–10 | 19 – 4 |
| 6EY–41662–00 | 19 – 5 |
| 6GA–44517–00 | 19 – 1 |
| 6EY–44574–00 | 19 – 2 |
| 6EY–45155–00 | 3 – 24 |
| 6EY–4581J–00 | 3 – 34 |
| 68N–5112T–00 | 22 – 13 |
| 6DU–51319–00 | 11 – 16 |
| F1K–6134M–00 | 30 – 4 |
| F1K–61355–00 | 30 – 11 |
| F1B–613C1–00 | 30 – 7 |
| F2X–613C1–00 | 30 – 16 |
| F3Y–61400–04 | 30 – 1 |
| F1K–6142B–00 | 30 – 12 |
| F2X–61435–00 | 30 – 19 |
| F1B–61438–00 | 28 – 2 |
| F1K–6143C–00 | 30 – 18 |
| F2N–61460–00 | 28 – 5 |
| EU0–61461–02 | 30 – 9 |
| F3Y–61461–10 | 28 – 4 |
| F2X–6146H–00 | 30 – 6 |
| F3Y–61481–04 | 28 – 1 |
| F1B–6151S–01 | 28 – 3 |
| F3Y–6152D–00 | 30 – 2 |
| F2X–6152M–02 | 30 – 3 |
| F1K–6153R–01 | 30 – 8 |
| F1K–61624–00 | 22 – 22 |
| F0X–61637–00 | 22 – 25 |

| PART NO. | REF. NO. |
|---|---|
| EU0–61652–00 | 10 – 7 |
| | 22 – 2 |
| F0X–61652–01 | 22 – 26 |
| EW2–62142–00 | 26 – 2 |
| F1G–62149–00 | 26 – 8 |
| F2F–6214A–00 | 26 – 1 |
| GP7–62159–02 | 26 – 6 |
| GA7–65772–00 | 27 – 3 |
| 6CS–6725F–00 | 29 – 17 |
| F3Y–67743–01 | 26 – 36 |
| F1B–67747–00 | 26 – 14 |
| GU2–6822E–01 | 18 – 18 |
| 6S5–682E0–10 | 18 – 2 |
| F3Y–68310–00 | 29 – 8 |
| FK7–68311–02 | 29 – 10 |
| FK7–68312–02 | 29 – 12 |
| FK7–68313–02 | 29 – 13 |
| F1S–68341–00 | 30 – 14 |
| EW2–68348–00 | 29 – 9 |
| F2X–6838B–02 | 30 – 15 |
| F2X–6838C–01 | 30 – 17 |
| 4D9–81168–00 | 17 – 12 |
| 60E–81315–01 | 17 – 2 |
| 60E–81328–00 | 14 – 10 |
| 6S5–81364–11 | 8 – 9 |
| 6EY–81410–00 | 14 – 8 |
| 6EY–81450–01 | 14 – 7 |
| 6EY–81800–00 | 15 – 1 |
| 6EY–81826–00 | 15 – 6 |
| 6EY–81840–00 | 15 – 4 |
| 11H–81844–00 | 15 – 2 |
| 1FK–81847–00 | 15 – 3 |
| 3TB–81847–00 | 15 – 5 |
| | 15 – 7 |
| 6EY–81940–09 | 16 – 13 |
| 6EY–81953–00 | 16 – 15 |
| 6EX–8195A–00 | 16 – 24 |
| 6D3–81960–01 | 16 – 10 |
| 6EY–81975–00 | 16 – 6 |
| 6GA–82115–01 | 16 – 16 |
| 6GA–82116–00 | 18 – 30 |
| 6EY–82117–00 | 16 – 17 |
| 67F–82151–00 | 16 – 22 |
| 67F–82151–10 | 16 – 23 |
| 67F–82151–30 | 16 – 20 |
| 67F–82151–40 | 16 – 21 |
| 6EX–82154–00 | 29 – 16 |
| 6EX–82170–12 | 16 – 19 |

| PART NO. | REF. NO. |
|---|---|
| 6EX–82310–02 | 16 – 4 |
| 6A0–82317–01 | 16 – 8 |
| | 16 – 26 |
| 6EY–82355–00 | 16 – 14 |
| 5S7–82380–00 | 5 – 7 |
| 68V–82504–00 | 17 – 1 |
| 60E–82556–10 | 18 – 3 |
| 6CR–82560–00 | 17 – 9 |
| 6ET–82576–00 | 17 – 3 |
| 703–82591–00 | 30 – 5 |
| 6EY–82593–01 | 16 – 29 |
| 6GA–8259L–51 | 16 – 12 |
| 6CS–8273J–11 | 17 – 14 |
| 6EY–83618–10 | 17 – 18 |
| 60E–83627–00 | 6 – 17 |
| 6EY–84385–00 | 10 – 6 |
| 6AA–85542–00 | 16 – 27 |
| 6DE–85790–00 | 17 – 17 |
| 61A–85790–01 | 17 – 7 |
| 8FP–85886–00 | 5 – 14 |
| 2S3–85896–02 | 17 – 11 |
| 6GA–8591A–31 | 16 – 2 |
| 6EY–8591S–00 | 16 – 3 |
| 6GA–E243A–00 | 10 – 30 |
| 6GA–E243E–00 | 10 – 1 |
| 67X–E2590–00 | 10 – 32 |
| 67X–E2590–10 | 10 – 32 |
| B4F–F817K–00 | 33 – 9 |
| 6GA–G2414–00 | 11 – 7 |
| | 34 – 20 |
| 6GA–G5235–00 | 12 – 2 |
| 6GA–G5332–00 | 12 – 1 |
| 6GA–G5511–00 | 12 – 3 |
| 6GA–G5514–00 | 11 – 10 |
| 6GA–G5593–00 | 12 – 8 |
| 6GA–G5831–00 | 11 – 1 |
| 6GA–G6882–00 | 11 – 6 |
| 5FU–H2100–20 | 18 – 4 |
| 6GA–R1312–02 | 11 – 4 |
| 6BU–R1313–00 | 11 – 25 |
| 6GA–R1314–00 | 13 – 1 |
| 6GA–R1318–00 | 11 – 18 |
| 6GA–R1321–00 | 11 – 17 |
| 6EX–R1326–10 | 11 – 13 |
| 6GA–R1333–00 | 11 – 34 |
| 6GA–R1381–00 | 12 – 13 |
| 6GA–R1959–00 | 11 – 28 |
| 6GA–R2358–00 | 13 – 8 |

| PART NO. | REF. NO. |
|---|---|
| F3Y–U1174–00 | 23 – 4 |
| | 23 – 14 |
| F3Y–U1338–00 | 25 – 20 |
| F3Y–U134A–00 | 28 – 8 |
| F3Y–U1355–01 | 31 – 5 |
| F2S–U13C1–00 | 22 – 47 |
| | 31 – 7 |
| F3Y–U1421–81 | 31 – 1 |
| F3Y–U1426–01 | 11 – 35 |
| | 11 – 36 |
| F2N–U142L–00 | 12 – 16 |
| | 18 – 13 |
| | 23 – 3 |
| | 23 – 13 |
| | 27 – 16 |
| | 28 – 15 |
| F3Y–U142L–00 | 25 – 17 |
| F3Y–U143E–00 | 31 – 3 |
| F3Y–U143G–00 | 29 – 18 |
| 6GA–U1461–10 | 13 – 11 |
| F3Y–U1467–00 | 30 – 20 |
| F3Y–U1467–10 | 28 – 14 |
| F1K–U1468–03 | 30 – 23 |
| F1W–U146G–00 | 28 – 13 |
| F3Y–U146G–00 | 28 – 16 |
| F3Y–U149C–01 | 28 – 12 |
| F2S–U1516–00 | 29 – 5 |
| F3Y–U153K–00 | 21 – 7 |
| F3Y–U1552–00 | 29 – 1 |
| F3P–U155D–01 | 29 – 2 |
| F3P–U155D–11 | 29 – 2 |
| F3Y–U156E–00 | 31 – 4 |
| F2N–U1628–10 | 22 – 17 |
| | 25 – 21 |
| F1B–U1653–03 | 22 – 21 |
| F2C–U1743–00 | 18 – 5 |
| F3Y–U2127–00 | 24 – 1 |
| F3Y–U213G–01 | 24 – 2 |
| F3Y–U2155–01 | 12 – 10 |
| F1S–U2280–02 | 22 – 33 |
| F1S–U2285–01 | 22 – 34 |
| F3Y–U2511–00 | 23 – 1 |
| F3Y–U2512–03 | 23 – 5 |
| F3Y–U2519–41 | 23 – 6 |
| F3Y–U251D–00 | 23 – 9 |
| F3Y–U251E–00 | 23 – 10 |
| F3Y–U252C–00 | 23 – 15 |
| F3Y–U252D–50 | 23 – 16 |

| PART NO. | REF. NO. |
|---|---|
| F3Y–U2624–00 | 31 – 6 |
| F3Y–U264L–00 | 21 – 2 |
| F3Y–U2663–00 | 21 – 4 |
| F3Y–U266B–01 | 25 – 6 |
| F3Y–U266D–10 | 25 – 11 |
| F3Y–U266E–10 | 25 – 13 |
| F1W–U269B–00 | 22 – 1 |
| F3Y–U2714–00 | 28 – 10 |
| F3Y–U2714–11 | 28 – 10 |
| F3Y–U271B–00 | 25 – 15 |
| F2C–U2733–00 | 27 – 19 |
| F3Y–U273B–10 | 11 – 30 |
| F3Y–U278A–02 | 22 – 38 |
| F2S–U278F–01 | 22 – 39 |
| F2S–U278H–01 | 22 – 40 |
| F3Y–U2875–00 | 21 – 9 |
| F4L–U3222–01 | 11 – 31 |
| F3Y–U351H–10 | 23 – 20 |
| F3Y–U351H–40 | 23 – 20 |
| F3Y–U351J–10 | 23 – 21 |
| F3Y–U351J–40 | 23 – 21 |
| F3Y–U351K–10 | 23 – 22 |
| F3Y–U351K–40 | 23 – 22 |
| F3Y–U351M–10 | 23 – 23 |
| F3Y–U351M–40 | 23 – 23 |
| F3Y–U351N–10 | 23 – 24 |
| F3Y–U351N–40 | 23 – 24 |
| F3Y–U351P–10 | 23 – 25 |
| F3Y–U351P–40 | 23 – 25 |
| F3Y–U351R–10 | 23 – 26 |
| F3Y–U351R–40 | 23 – 26 |
| F3Y–U351S–10 | 23 – 27 |
| F3Y–U351S–40 | 23 – 27 |
| F3Y–U353B–80 | 20 – 7 |
| F3Y–U353B–90 | 20 – 8 |
| F3Y–U353B–A0 | 20 – 7 |
| F3Y–U353B–B0 | 20 – 8 |
| F3Y–U3581–10 | 23 – 19 |
| F3Y–U3581–40 | 23 – 19 |
| F6N–U371A–30 | 25 – 1 |
| F3Y–U371A–J0 | 25 – 1 |
| F6N–U371B–30 | 25 – 2 |
| F3Y–U371B–J0 | 25 – 2 |
| F3Y–U3743–01 | 25 – 5 |
| F3Y–U3743–20 | 25 – 5 |
| F3Y–U3746–01 | 12 – 15 |
| F1K–U3774–00 | 25 – 7 |
| F1B–U3850–02 | 25 – 3 |

| PART NO. | REF. NO. |
|---|---|
| F6C–U4114–00 | 32 – 8 |
| F2W–U4114–D0 | 32 – 8 |
| F4S–U411C–40 | 32 – 7 |
| F2W–U411C–D0 | 32 – 7 |
| F3Y–U411H–02 | 32 – 9 |
| F3Y–U413P–30 | 33 – 11 |
| F3Y–U413P–40 | 33 – 11 |
| F3Y–U415B–10 | 33 – 4 |
| F3V–U416A–10 | 33 – 7 |
| F6N–U417D–30 | 32 – 1 |
| F6N–U417D–40 | 32 – 1 |
| F6N–U417E–30 | 32 – 2 |
| F6N–U417E–40 | 32 – 2 |
| F6N–U417F–30 | 32 – 3 |
| F6N–U417F–40 | 32 – 3 |
| F6N–U417G–30 | 32 – 4 |
| F6N–U417G–40 | 32 – 4 |
| F6N–U417H–30 | 32 – 5 |
| F6N–U417H–40 | 32 – 5 |
| F6N–U417J–30 | 32 – 6 |
| F6N–U417J–40 | 32 – 6 |
| F1S–U419E–01 | 33 – 10 |
| F3V–U41B1–00 | 33 – 2 |
| F3V–U41B1–20 | 33 – 3 |
| F3Y–U41B1–30 | 33 – 1 |
| F3K–U41D5–10 | 33 – 5 |
| F3K–U41D5–30 | 33 – 5 |
| F4E–U41E1–30 | 33 – 8 |
| F1B–U41F5–21 | 33 – 6 |
| F3Y–U4261–00 | 27 – 10 |
| F3Y–U475A–00 | 21 – 3 |
| F1W–U491K–01 | 23 – 11 |
| F3Y–U491K–02 | 25 – 14 |
| F3Y–U4953–00 | 21 – 11 |
| | 21 – 13 |
| GP7–U4953–10 | 22 – 19 |
| | 22 – 20 |
| | 25 – 22 |
| F3Y–U4994–00 | 22 – 45 |
| F3Y–U513M–00 | 21 – 6 |
| F3Y–U516N–00 | 20 – 1 |
| F3Y–U516N–10 | 20 – 1 |
| F3Y–U516P–00 | 20 – 2 |
| F2X–U5175–00 | 20 – 3 |
| | 20 – 12 |
| F3Y–U517B–00–P0 | 21 – 1 |
| F3Y–U517B–00–P2 | 21 – 1 |
| F3Y–U517E–00 | 31 – 2 |

| PART NO. | REF. NO. |
|---|---|
| F3Y–U517H–00 | 21 – 8 |
| F1K–U5772–04 | 26 – 34 |
| | 27 – 5 |
| F3Y–U5901–00 | 32 – 10 |
| F3Y–U591A–10 | 25 – 12 |
| F3Y–U592A–10 | 25 – 10 |
| F3Y–U596B–10 | 21 – 10 |
| F3Y–U596C–10 | 21 – 12 |
| F3Y–U72C0–00 | 11 – 29 |
| 6GA–U72M2–00 | 11 – 19 |
| EU0–U7354–00–01 | 19 – 10 |
| EU0–U7354–00–03 | 19 – 10 |
| EU0–U7354–00–05 | 19 – 10 |
| EU0–U7354–00–10 | 19 – 10 |
| EU0–U7354–00–20 | 19 – 10 |
| F1B–U751G–10 | 27 – 14 |
| F2C–U753B–01 | 27 – 17 |
| F3Y–U7550–01 | 27 – 1 |
| F3Y–U7555–00 | 27 – 7 |
| F3Y–U7557–00 | 11 – 41 |
| F2C–U7564–01 | 27 – 18 |
| GJ1–U7578–22 | 18 – 21 |
| F1S–U757B–01 | 27 – 15 |
| F3Y–U758D–00 | 27 – 12 |
| F2S–U759B–00 | 26 – 37 |
| | 26 – 38 |
| F3Y–U759B–00 | 20 – 6 |
| F1K–U759C–00 | 26 – 41 |
| F1W–U759C–01 | 18 – 7 |
| | 26 – 39 |
| | 26 – 40 |
| F1B–U761D–02 | 22 – 5 |
| F3Y–U7711–02 | 26 – 12 |
| 6GA–U771G–00 | 22 – 11 |
| 6GA–U773D–00 | 22 – 15 |
| F3Y–U773D–00 | 29 – 7 |
| F4L–U773D–00 | 26 – 43 |
| F3Y–U773D–10 | 10 – 2 |
| F3Y–U773D–20 | 10 – 31 |
| 6GA–U773E–00 | 22 – 12 |
| F3Y–U7767–00 | 26 – 27 |
| F1B–U7773–00 | 26 – 13 |
| F2S–U7823–01 | 18 – 17 |
| F2N–U7831–10 | 26 – 16 |
| GP7–U7832–01 | 26 – 17 |
| GP7–U7833–11 | 26 – 18 |
| GP7–U7834–00 | 26 – 21 |
| GP7–U7835–00 | 26 – 19 |

| PART NO. | REF. NO. |
|---|---|
| GP7–U783F–00 | 26 – 23 |
| F3Y–U7844–00 | 26 – 24 |
| 6GA–U784C–00 | 22 – 14 |
| F3Y–U7856–00 | 26 – 31 |
| GP7–U785G–10 | 26 – 33 |
| GP7–U785H–00 | 26 – 28 |
| F2N–U8169–10 | 22 – 32 |
| F4L–U820A–00 | 18 – 16 |
| F2S–U8211–00 | 18 – 9 |
| EU0–U821D–00 | 27 – 2 |
| F4P–U821D–00 | 18 – 15 |
| F1S–U8221–00 | 18 – 8 |
| | 26 – 42 |
| | 27 – 11 |
| EU0–U8221–31 | 18 – 6 |
| F3J–U822E–01 | 18 – 19 |
| F2C–U826C–00 | 25 – 18 |
| F3Y–U828H–30 | 20 – 9 |
| F1W–U828M–00 | 18 – 22 |
| | 22 – 8 |
| | 24 – 3 |
| | 26 – 9 |
| | 27 – 20 |
| | 28 – 18 |
| F0V–U8572–10 | 11 – 32 |
| F2S–U8577–00 | 11 – 33 |
| F2S–U8592–00 | 18 – 10 |
| F2S–U8593–00 | 18 – 11 |
| F3Y–U882F–00 | 22 – 43 |
| F3Y–U883B–00 | 12 – 19 |
| F3Y–U883E–01 | 12 – 14 |
| F3Y–U883N–00 | 22 – 28 |
| F3Y–U883P–00 | 22 – 29 |
| F3Y–U883T–00 | 22 – 30 |
| F3Y–U884R–00 | 22 – 44 |
| F3Y–U892D–01 | 12 – 20 |
| F3Y–U892F–00 | 27 – 24 |
| 6GA–W0001–01 | 34 – 1 |
| 6GA–W0001–20 | 34 – 17 |
| 6GA–W009B–00 | 2 – 1 |
| 90105–06027 | 1 – 5 |
| 90105–06035 | 10 – 29 |
| 90105–06M07 | 2 – 25 |
| 90105–06M15 | 8 – 21 |
| 90105–07004 | 4 – 4 |
| 90105–08243 | 5 – 9 |
| 90105–08860 | 22 – 31 |
| 90105–10M49 | 19 – 6 |

| PART NO. | REF. NO. |
|---|---|
| 90105–12101 | 3 – 12 |
| 90109–06295 | 4 – 20 |
| 90109–06308 | 2 – 12 |
| 90109–066F0 | 1 – 14 |
| 90109–06832 | 12 – 17 |
| 90109–06M92 | 19 – 3 |
| 90109–08041 | 11 – 39 |
| 90110–06040 | 22 – 27 |
| 90110–06172 | 7 – 7 |
| | 7 – 10 |
| 90110–06274 | 4 – 17 |
| 90110–06287 | 7 – 12 |
| 90110–06335 | 7 – 13 |
| 90110–06382 | 29 – 3 |
| 90110–06822 | 11 – 15 |
| 90110–08212 | 14 – 5 |
| 90111–06803 | 23 – 2 |
| | 23 – 12 |
| 90111–06874 | 20 – 11 |
| | 28 – 9 |
| 90119–06078 | 1 – 19 |
| 90119–06311 | 16 – 7 |
| 90119–06832 | 18 – 14 |
| | 20 – 14 |
| 90119–06882 | 20 – 5 |
| 90119–06889 | 11 – 8 |
| 90119–06891 | 12 – 11 |
| | 22 – 46 |
| 90119–069UH | 30 – 24 |
| 90119–069UP | 25 – 4 |
| 90119–069UX | 13 – 4 |
| 90119–06MA3 | 17 – 16 |
| 90119–08034 | 9 – 4 |
| 90119–08097 | 9 – 5 |
| 90119–08169 | 6 – 3 |
| 90119–08187 | 6 – 4 |
| 90119–08823 | 19 – 9 |
| 90119–08827 | 30 – 26 |
| 90119–08829 | 25 – 16 |
| 90119–08836 | 30 – 22 |
| 90119–08840 | 11 – 26 |
| | 13 – 2 |
| 90119–08859 | 19 – 8 |
| 90119–08861 | 22 – 41 |
| | 22 – 42 |
| 90119–08881 | 11 – 24 |
| 90119–089U7 | 11 – 40 |
| 90119–09004 | 2 – 3 |

| PART NO. | REF. NO. |
|---|---|
| 90119–10004 | 1 – 8 |
| 90119–10067 | 11 – 3 |
| 90119–10804 | 25 – 9 |
| 90119–10808 | 11 – 5 |
| 90149–06190 | 7 – 3 |
| 90151–06024 | 2 – 7 |
| 90151–06815 | 28 – 11 |
| 90160–05003 | 16 – 28 |
| 90169–049U1 | 26 – 20 |
| 90176–08080 | 5 – 19 |
| 90179–08327 | 3 – 4 |
| 90179–20010 | 3 – 23 |
| 90183–06902 | 20 – 10 |
| 90201–04810 | 29 – 20 |
| 90201–06801 | 13 – 6 |
| | 13 – 9 |
| 90201–068G0 | 29 – 4 |
| 90201–06906 | 28 – 6 |
| 90201–10591 | 3 – 33 |
| 90201–109U6 | 25 – 8 |
| 90201–121H0 | 3 – 13 |
| 90201–20030 | 3 – 21 |
| 90201–24800 | 12 – 9 |
| 90201–30013 | 14 – 6 |
| 90208–20001 | 3 – 22 |
| 90215–10003 | 3 – 32 |
| 90267–329UR | 26 – 22 |
| 90267–48806 | 18 – 23 |
| | 22 – 9 |
| | 24 – 4 |
| | 26 – 10 |
| | 27 – 21 |
| | 28 – 20 |
| 90267–489U1 | 18 – 12 |
| | 20 – 4 |
| | 20 – 13 |
| | 25 – 19 |
| | 26 – 35 |
| | 27 – 4 |
| | 27 – 6 |
| 90267–489U2 | 26 – 5 |
| | 30 – 21 |
| 90267–489U6 | 26 – 7 |
| 90267–489U8 | 22 – 6 |
| | 23 – 7 |
| | 23 – 18 |
| 90269–08801 | 21 – 5 |
| 90280–03045 | 3 – 11 |

| PART NO. | REF. NO. |
|---|---|
| 90387–06119 | 16 – 9 |
| 90387–06289 | 12 – 12 |
| 90387–06319 | 13 – 5 |
| 90387–06M05 | 8 – 10 |
| 90387–08M06 | 11 – 27 |
| 90387–08M30 | 13 – 3 |
| 90387–08M37 | 6 – 2 |
| | 6 – 15 |
| 90401–20008 | 7 – 16 |
| 90430–06M03 | 2 – 26 |
| 90430–08119 | 1 – 7 |
| 90430–08209 | 7 – 24 |
| | 34 – 10 |
| 90430–12002 | 11 – 37 |
| 90445–14025 | 11 – 21 |
| 90445–16019 | 10 – 15 |
| 90445–16020 | 10 – 18 |
| 90445–18012 | 10 – 9 |
| 90445–18018 | 10 – 25 |
| 90445–18020 | 8 – 22 |
| 90445–18M06 | 7 – 19 |
| 90445–21015 | 10 – 13 |
| 90446–24M44 | 10 – 16 |
| 90446–24M89 | 10 – 5 |
| 90446–24MF4 | 8 – 23 |
| 90447–15005 | 11 – 22 |
| 90447–19004 | 8 – 17 |
| 90447–19014 | 8 – 28 |
| | 10 – 10 |
| 90450–90002 | 6 – 5 |
| 90450–99804 | 27 – 9 |
| 90450–99808 | 9 – 11 |
| 90450–99810 | 9 – 12 |
| 90464–10008 | 18 – 26 |
| 90464–20005 | 17 – 19 |
| 90464–32801 | 18 – 20 |
| | 18 – 24 |
| | 18 – 28 |
| | 18 – 29 |
| | 26 – 11 |
| | 27 – 22 |
| | 28 – 19 |
| 90464–35132 | 8 – 30 |
| | 10 – 12 |
| | 17 – 5 |
| 90464–99804 | 24 – 5 |
| 90465–11829 | 11 – 23 |
| | 22 – 7 |

| PART NO. | REF. NO. |
|---|---|
| 90465–11829 | 26 – 29 |
| | 26 – 30 |
| | 26 – 32 |
| | 28 – 17 |
| 90465–13M18 | 6 – 6 |
| 90465–13M39 | 17 – 6 |
| 90467–110A1 | 8 – 26 |
| 90467–141A3 | 10 – 17 |
| 90467–150A5 | 10 – 4 |
| | 27 – 25 |
| 90467–160A0 | 10 – 11 |
| | 10 – 20 |
| | 10 – 22 |
| | 10 – 24 |
| | 10 – 26 |
| 90467–170A4 | 8 – 19 |
| | 8 – 24 |
| | 8 – 29 |
| 90467–170A5 | 7 – 21 |
| 90467–180A5 | 22 – 4 |
| | 22 – 16 |
| 90467–200A3 | 8 – 18 |
| | 10 – 14 |
| | 10 – 33 |
| | 10 – 35 |
| 90467–240A0 | 10 – 34 |
| 90467–240A3 | 10 – 36 |
| 90480–06M46 | 8 – 8 |
| 90480–22M15 | 6 – 1 |
| | 6 – 14 |
| 90601–118UF | 11 – 20 |
| | 22 – 3 |
| 90601–155U4 | 12 – 18 |
| | 26 – 25 |
| | 26 – 26 |
| 90601–179U8 | 27 – 8 |
| | 27 – 13 |
| 90601–200U2 | 18 – 25 |
| | 18 – 27 |
| | 22 – 10 |
| | 27 – 23 |
| 91314–06065 | 1 – 17 |
| 91317–06014 | 14 – 11 |
| 91317–06035 | 14 – 9 |
| 91380–04030 | 29 – 6 |
| | 29 – 19 |
| 91380–06016 | 17 – 13 |
| 91380–06020 | 8 – 11 |

| PART NO. | REF. NO. |
|---|---|
| 92990–06100 | 15 – 10 |
| 92990–10600 | 17 – 8 |
| 92990–12200 | 11 – 38 |
| | 22 – 24 |
| 9299R–05200 | 22 – 36 |
| | 23 – 8 |
| | 23 – 17 |
| 93101–25M50 | 11 – 12 |
| | 34 – 22 |
| 93101–25M55 | 12 – 4 |
| | 34 – 18 |
| 93101–25M56 | 12 – 7 |
| | 34 – 19 |
| 93101–40001 | 3 – 18 |
| | 34 – 4 |
| 93101–40002 | 3 – 19 |
| | 34 – 5 |
| 93102–25M34 | 11 – 11 |
| | 34 – 21 |
| 93210–17010 | 2 – 16 |
| | 34 – 14 |
| 93210–19123 | 1 – 13 |
| 93210–19522 | 8 – 4 |
| 93210–24M79 | 8 – 15 |
| 93210–32172 | 17 – 15 |
| 93210–44003 | 11 – 14 |
| | 34 – 23 |
| 93306–00702 | 3 – 15 |
| 93306–205XG | 12 – 6 |
| 93306–255X7 | 11 – 9 |
| 93306–30323 | 2 – 5 |
| 93306–90901 | 3 – 16 |
| 93310–42239 | 3 – 28 |
| 93450–19095 | 3 – 10 |
| 93450–32152 | 2 – 9 |
| 93606–12019 | 9 – 3 |
| | 19 – 7 |
| 93606–19M23 | 8 – 6 |
| 94580–25060 | 7 – 15 |
| 94591–57140 | 4 – 14 |
| 94702–00409 | 16 – 1 |
| 95024–08030 | 9 – 10 |
| 95380–06600 | 13 – 7 |
| | 13 – 10 |
| 95380–06700 | 15 – 9 |
| 9538R–06700 | 28 – 7 |
| 95612–08625 | 5 – 18 |
| 95720–06300 | 30 – 10 |

| PART NO. | REF. NO. |
|---|---|
| 95720–08300 | 30 – 13 |
| 9572R–05300 | 22 – 37 |
| 9572R–06300 | 26 – 15 |
| 9572R–08300 | 21 – 14 |
| | 22 – 18 |
| | 25 – 23 |
| 95812–06012 | 4 – 22 |
| 95812–08070 | 2 – 4 |
| 95814–06020 | 5 – 10 |
| | 8 – 12 |
| | 16 – 11 |
| 95814–06035 | 8 – 7 |
| 95814–06045 | 2 – 15 |
| 95814–06055 | 2 – 13 |
| | 8 – 13 |
| 95814–06085 | 2 – 14 |
| 95814–08020 | 7 – 23 |
| 95880–06016 | 16 – 5 |
| 95E34–06012 | 2 – 30 |
| 95E34–06016 | 9 – 9 |
| 95E34–06020 | 7 – 22 |
| 95E34–08012 | 1 – 6 |
| 97012–10025 | 3 – 31 |
| 97513–05514 | 14 – 12 |
| 97513–08514 | 18 – 31 |
| 97513–08530 | 15 – 8 |
| 97513–08535 | 5 – 17 |
| 97513–08555 | 2 – 21 |
| 97702–50520 | 5 – 15 |
| 97780–60520 | 17 – 4 |
| 97880–03008 | 29 – 11 |
| 97880–05025 | 29 – 14 |
| 9788R–05025 | 22 – 35 |
| 97E95–06520 | 17 – 10 |
| 97E95–06612 | 16 – 18 |
| 97E95–08540 | 2 – 27 |
| 99009–52500 | 12 – 5 |
| 99530–08016 | 7 – 11 |
| 99530–10014 | 2 – 10 |
| 99530–10114 | 2 – 11 |
| 99590–08012 | 2 – 20 |
| 99590–14016 | 11 – 2 |
| 99780–12600 | 22 – 23 |

| PART NO. | REF. NO. |
|---|---|