YAMAHA

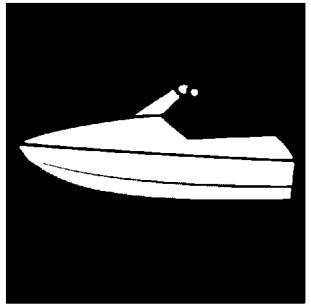

PARTS CATALOGUE

WaveRunner FX HO

FX1900B-A (F7K2 /6LEA/6LE1)

FX1900C-A (F7K3 /6LEA/6LE1)

YAMAHA
GENUINE
Parts & Accessories

1ZF7K-100E5

( )

FX1900B-A/FX1900C-A
PARTS CATALOGUE
©2023 by Yamaha Motor Co., Ltd.
1st edition, September 2023
All rights reserved.
Any reprinting or unauthorized use
without the written permission of
Yamaha Motor Co., Ltd.
is expressly prohibited.
Printed in Japan.

FOREWORD

This Parts Catalogue is related to the parts for the model(s) on the cover page. When you are ordering replacement parts, please refer to this Parts Catalogue and quote both part numbers and part names correctly.

1. Modifications or additions which have been made after the issue of the Parts Catalogue will be announced in the Parts News.
   It is advisable that you make the necessary corrections to the Parts Catalogue according to the Parts News.

2. Abbreviations
   The following abbreviations are used in this Parts Catalogue.

   "UR" Use specified parts number.

   "UN" Use as many as needed.

   "AP" Alternate Parts

   "LM" Locally Made (Parts need to be ordered locally)

   "F#" Frame No. (Applicable machine No.)

   "O/S" Over Size

3. The number of components for assembly
   - Parts, which are to be supplied in an assembly, are listed with a dot (.) in front of the part name as shown below.
   - The numeral appearing to the right of each component part indicates the quantity of parts for each assembly unit.

PART NO.	DESCRIPTION	Q'TY	REMARKS
2F5–83310–60	FRONT FLASHER LIGHT ASSY	2	
115–83311–60	.BULB (6V–18W)	1	

4. Applicable colours of graphics are represented in the "REMARKS" as shown below.

PART NO.	DESCRIPTION	Q'TY	REMARKS
2N4–24110–00–X5	FUEL TANK COMP.	2	MXR
3J1–24240–10	.GRAPHIC, FUEL TANK	1	FOR MXR

5. Note that the illustrations for reference in finding parts numbers are not to be used for assembling. When assembling, please use the applicable service manual.

6. The asterisk (*) before a reference number indicates modified items after the first edition.

7. Applicable Serial No.

Engine Serial No.

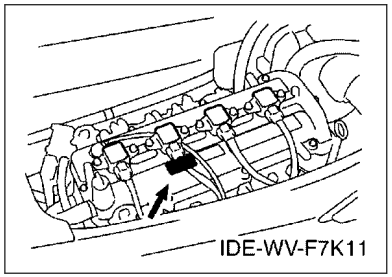

Primary Identification No.

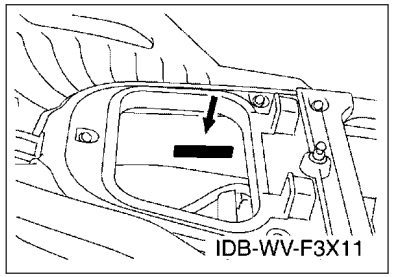

8. Applicable Colour Code (The (*) mark shows Model colour.)

Abbreviation	Colour Name	Colour Code
PURW(*)	PURE WHITE	0240

9. Quantity Column Information

Column No.	Name Of Q'ty Column	Destination
1	F7K2	EUROPE
2	F7K3	EUROPE

10. Applicable Starting Serial No.

Engine Serial No.

Serial No.	Name Of Q'ty Column	Model Code

Primary Identification No.

Serial No.	Name Of Q'ty Column	Model Code
F7K-800101	F7K2	F7K2
F7K-800101	F7K3	F7K3

CONTENTS

CYLINDER 1....1
CYLINDER 2....2
CRANKCASE....3
CRANKSHAFT & PISTON....5
VALVE....6
INTAKE 1....8
INTAKE 2....9
OIL PUMP....10
OIL PAN....11
OIL COOLER....12
BREATHER OIL....13
EXHAUST 1....14
EXHAUST 2....15
JET UNIT 1....17
JET UNIT 2....19
JET UNIT 3....20
JET UNIT 4....21
GENERATOR....22
STARTING MOTOR....23
ELECTRICAL 1....24
ELECTRICAL 2....26
ELECTRICAL 3....27
ELECTRICAL 4....29
ENGINE MOUNT....30
ENGINE HATCH 1....31
ENGINE HATCH 2....34
HULL & DECK....36
HULL & DECK 2....38
GUNWALE & MAT....39
VENTILATION....41
SEAT & UNDER LOCKER....42
SEAT & UNDER LOCKER 2....43
FUEL TANK....45
BILGE PUMP....47
EXHAUST 3....48
CONTROL CABLE....49
STEERING 1....52
STEERING 2....53
STEERING 3....55
GRAPHICS....56
IMPORTANT LABELS....57
REPAIR KIT 1....58

INDEX

NUMERICAL INDEX....59

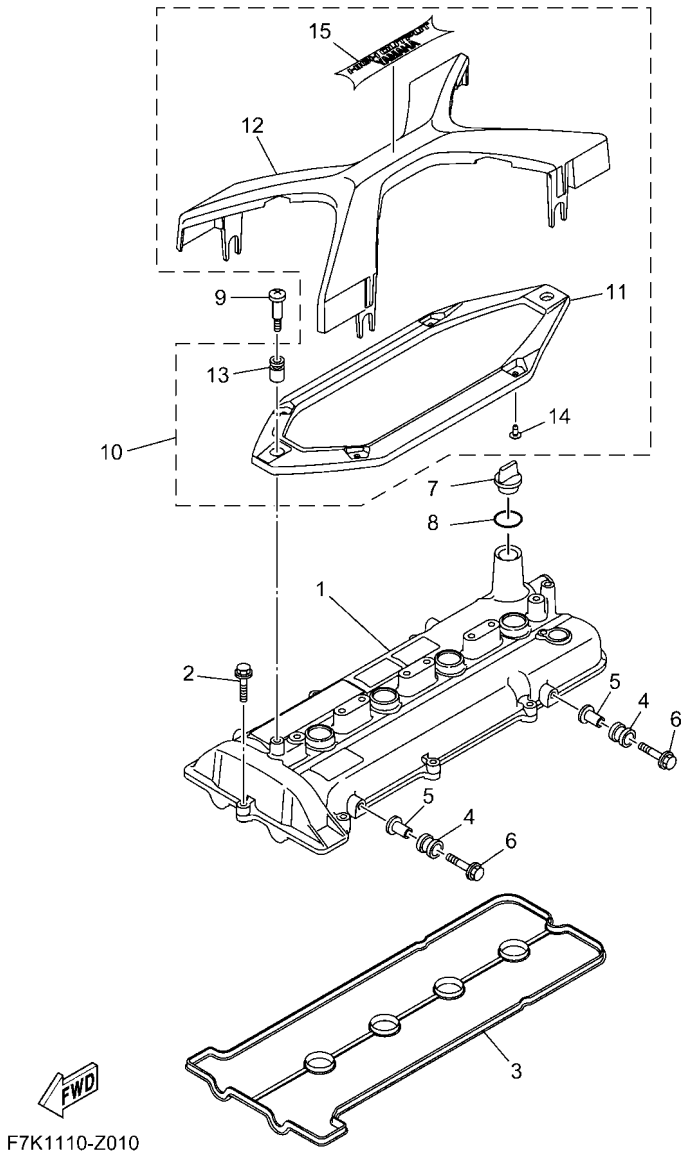

FIG. 1 CYLINDER 1

REF. NO.	PART NO.	DESCRIPTION	F7K2	F7K3				REMARKS
1	6LE–11191–00	COVER, CYLINDER HEAD 1	1	1				
2	90105–06028	BOLT, FLANGE	8	8				
3	6LE–11193–00	GASKET, HEAD COVER 1	1	1				
4	68V–82317–01	DAMPER, IGNITION COIL	4	4				
5	90387–06119	COLLAR	4	4				
6	95824–06025	BOLT, FLANGE	4	4				
7	3Y1–15363–10	PLUG, OIL	1	1				
8	93210–19123	O-RING	1	1				
9	6S5–E118E–02	BOLT, COVER MOUNTING	2	2				
10	6LE–1110M–00	COVER ASSY 1	1	1				
11	6LE–1111M–00	.COVER 1	1	1				
12	6LE–1111N–00	.COVER 2	1	1				
13	6LE–11328–00	.GROMMET, ANODE	2	2				
14	90149–05050	.SCREW	4	4				
15	6LE–1111K–00	.EMBLEM	1	1				

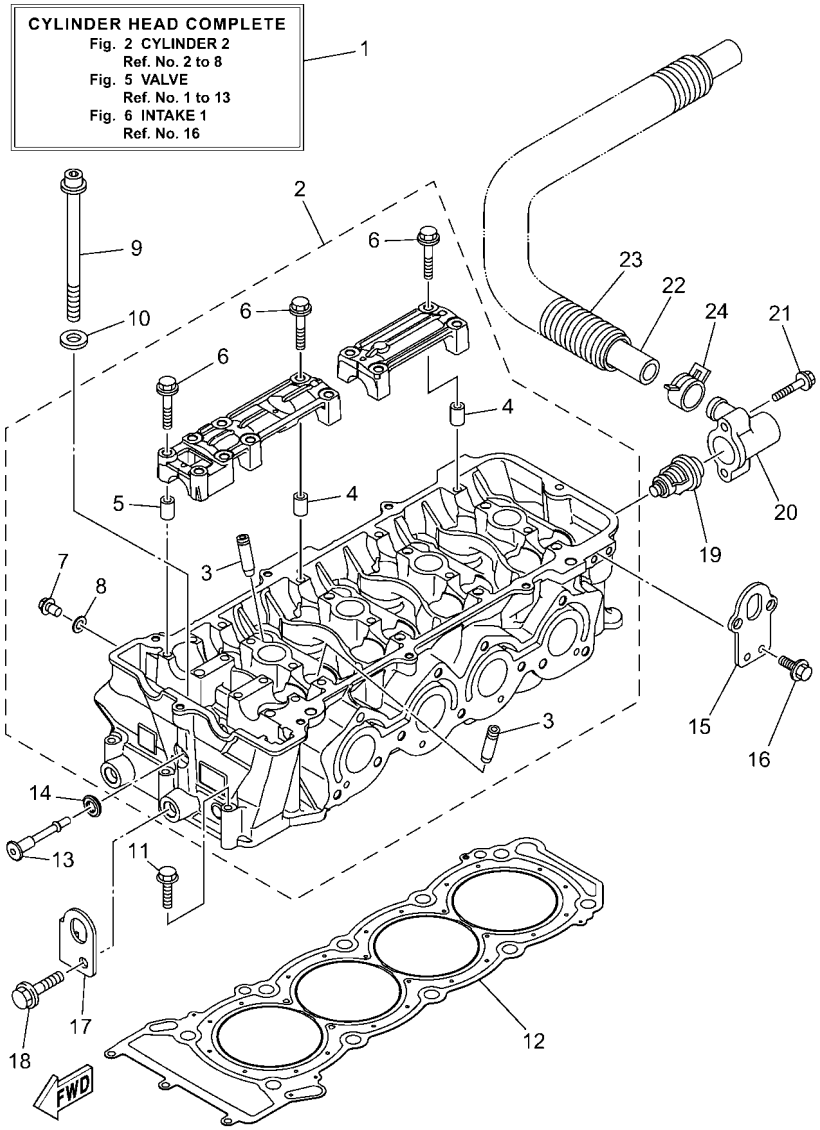

F7K1110-Z020

FIG. 2 CYLINDER 2

REF. NO.	PART NO.	DESCRIPTION	F7K2	F7K3				REMARKS
1	6LE–W009A–00	CYLINDER HEAD COMPLETE	1	1				
2	6LE–11102–00	CYLINDER HEAD ASSY	1	1				
3	6S5–11133–10	.GUIDE, VALVE 1	16	16				
4	91809–16002	.PIN, DOWEL	4	4				
5	91809–16002	.PIN, DOWEL	4	4				
6	90119–07235	.BOLT/WASHER-CAM CAPS	24	24				
7	95E34–08012	.BOLT, FLANGE DEEP RECESS	1	1				
8	90430–08119	.GASKET	1	1				
9	6S5–12228–01	BOLT	10	10				
10	6HL–12456–00	WASHER	10	10				
11	97513–06555	BOLT, WITH WASHER	3	3				
12	6LE–11181–00	GASKET, CYLINDER HEAD 1	1	1				
13	90109–06293	BOLT	1	1				
14	5VY–1111G–00	RUBBER, MOUNT 1	1	1				
15	6BH–1111E–00	HANGER, ENGINE 2	2	2				
16	90119–06078	BOLT, WITH WASHER	4	4				
17	6BH–11119–00	HANGER, ENGINE	1	1				
18	97513–10525	BOLT, WITH WASHER	1	1				
19	6D3–12411–00	THERMOSTAT	1	1				
20	6BH–12413–00	COVER, THERMOSTAT	1	1				
21	90105–06035	BOLT, FLANGE	2	2				
22	6S5–12578–00	HOSE 3	1	1				
23	90447–28008	TUBE (L850)	1	1				
24	90467–240A0	CLIP	1	1				

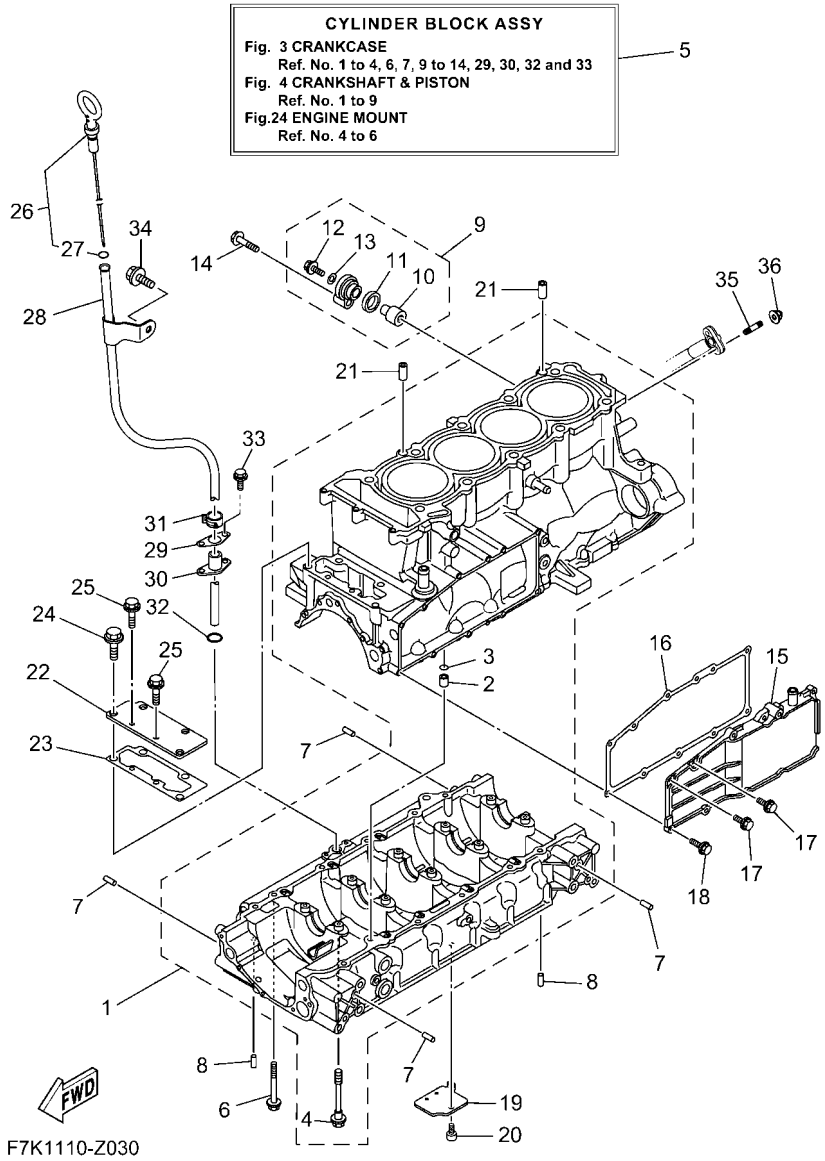

FIG. 3 CRANKCASE

REF. NO.	PART NO.	DESCRIPTION	F7K2	F7K3				REMARKS
1	6LE–15109–00	CRANKCASE ASSY	1	1				
2	99530–10114	.PIN, DOWEL	1	1				
3	93210–11453	.O-RING	1	1				
4	90105–10071	.BOLT, FLANGE	10	10				
5	6LE–W009B–00	CYLINDER BLOCK ASSY	1	1				
6	95814–06070	BOLT, FLANGE	12	12				
7	93606–12019	PIN, DOWEL	8	8				
8	93604–10M03	PIN, DOWEL	2	2				
9	69J–11301–11	ANODE COVER ASSY	1	1				
10	68V–11325–02	.ANODE	1	1				
11	67F–11328–01	.GROMMET, ANODE	1	1				
12	90105–06M07	.BOLT, FLANGE	1	1				
13	90430–06M03	.GASKET	1	1				
14	97E95–08540	BOLT, HEXAGON W/W DEEP RECESS	1	1				
15	6S5–1131M–10–8P	COVER	1	1				
16	6BH–13557–00	GASKET	1	1				
17	95E34–06014	BOLT, FLANGE DEEP RECESS	2	2				
18	95E34–06020	BOLT, FLANGE DEEP RECESS	9	9				
19	6S5–13337–10	PLATE, BAFFLE LOWER	1	1				
20	90110–06182	BOLT, HEXAGON SOCKET HEAD	1	1				
21	99530–10114	PIN, DOWEL	2	2				
22	6BH–1131C–00	COVER, JOINT	1	1				
23	6BH–1131B–00	GASKET, COVER	1	1				
24	95814–08020	BOLT, FLANGE	4	4				
25	95814–06016	BOLT, FLANGE	2	2				
26	6ET–15362–00	PLUG, OIL LEVEL	1	1				
27	93210–06632	.O-RING	1	1				

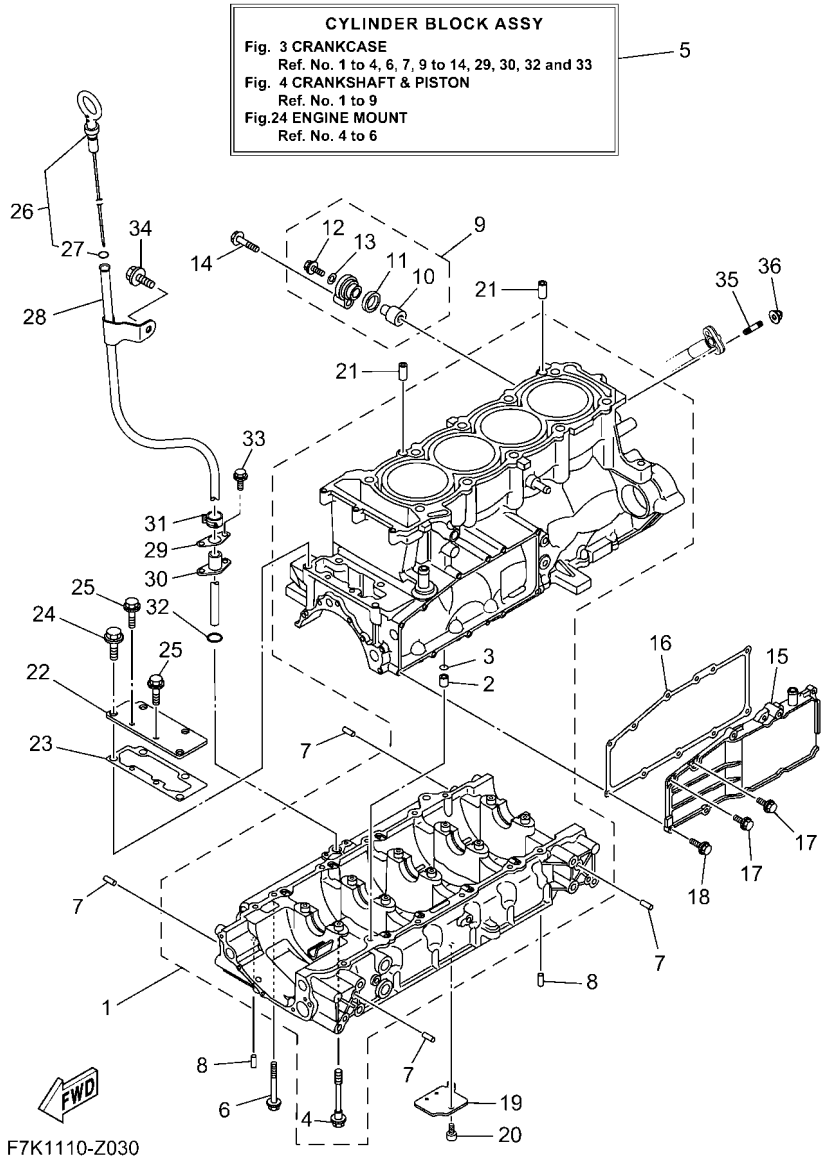

FIG. 3 CRANKCASE

REF. NO.	PART NO.	DESCRIPTION	F7K2	F7K3				REMARKS
28	6LE–8572F–00	PIPE, OIL LEVEL	1	1				
29	6BH–1319K–00	PLATE	1	1				
30	6CS–85516–00	SPACER	1	1				
31	90467–150A1	CLIP	1	1				
32	93210–12016	O-RING	1	1				
33	90109–06268	BOLT	2	2				
34	90105–08021	BOLT, FLANGE	1	1				
35	90116–06051	BOLT, STUD	2	2				
36	90176–06047	NUT,CAP	2	2				

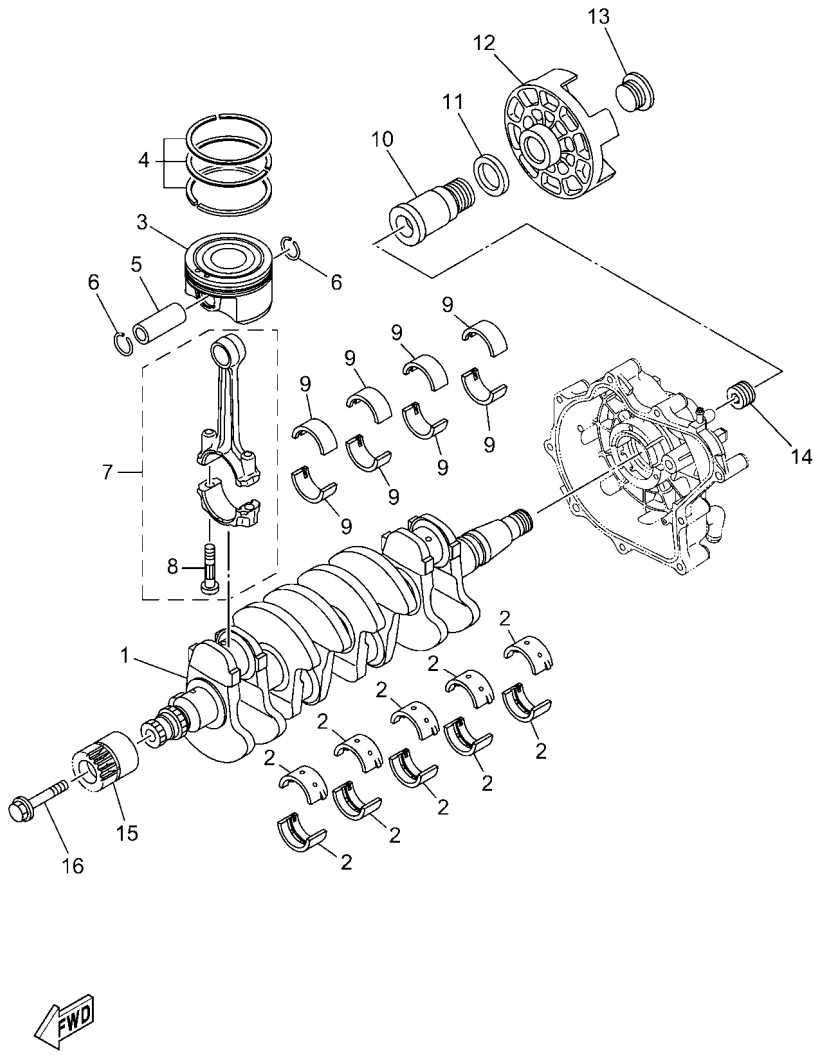

F7K1110-Z040

FIG. 4 CRANKSHAFT & PISTON

REF. NO.	PART NO.	DESCRIPTION	F7K2	F7K3				REMARKS
1	6LE–11411–00	CRANKSHAFT	1	1				
2	6LE–11416–00	PLANE BEARING, CRANKSHAFT 1	10	10				UR BROWN
	6LE–11416–10	PLANE BEARING, CRANKSHAFT 1	10	10				UR BLACK
	6LE–11416–20	PLANE BEARING, CRANKSHAFT 1	10	10				UR BLUE
	6LE–11416–30	PLANE BEARING, CRANKSHAFT 1	10	10				UR GREEN
	6LE–11416–40	PLANE BEARING, CRANKSHAFT 1	10	10				UR YELLOW
3	6LE–11631–00–B0	PISTON (STD)	4	4				
4	6LE–11603–00	PISTON RING SET (STD)	4	4				
5	6ET–11633–00	PIN, PISTON	4	4				
6	93450–22174	CIRCLIP	8	8				
7	6S5–11650–10	CONNECTING ROD ASSY	4	4				
8	6S5–11654–10	.BOLT, CONNECTING ROD	2	2				
9	6LE–11656–00	PLANE BEARING, CONNECTING ROD	8	8				UR BLUE
	6LE–11656–10	PLANE BEARING, CONNECTING ROD	8	8				UR BLACK
	6LE–11656–20	PLANE BEARING, CONNECTING ROD	8	8				UR BROWN
	6LE–11656–30	PLANE BEARING, CONNECTING ROD	8	8				UR GREEN
10	6S5–17572–01	SHAFT, TRANSFER	1	1				
11	6S5–12289–00	WASHER	1	1				
12	6S5–45813–01–94	FLANGE, COUPLING	1	1				
13	6S5–17525–01	HOLDER 2	1	1				
14	6S5–11459–01	NUT, SPECIAL	1	1				
15	6BH–17586–11	GEAR, TRANSFER DRIVE	1	1				
16	6S5–17031–00	BOLT	1	1				

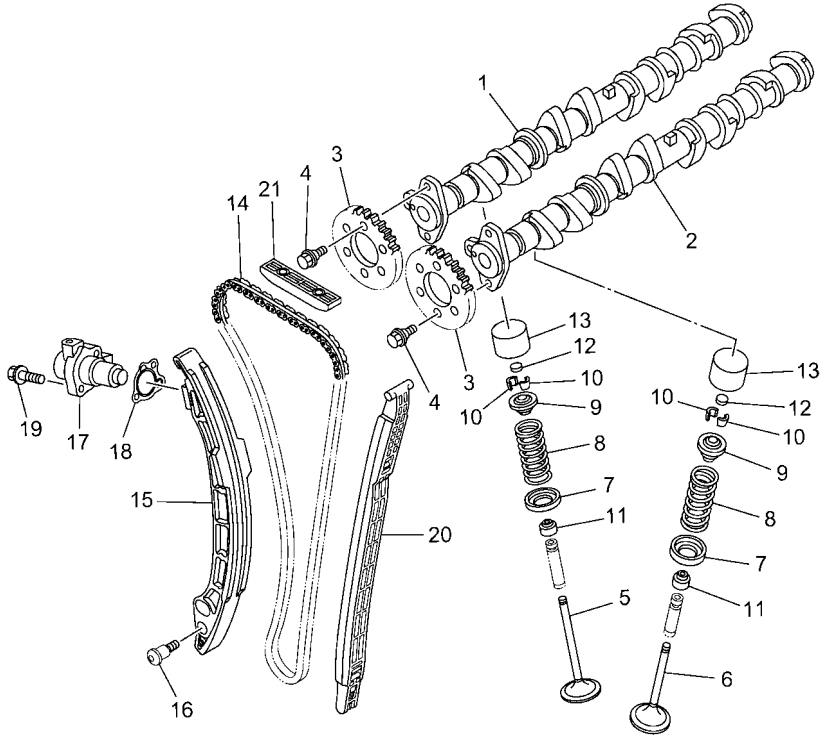

F7K1110-Z050

FIG. 5 VALVE

REF. NO.	PART NO.	DESCRIPTION	F7K2	F7K3				REMARKS
1	6LE–12171–00	CAMSHAFT 1	1	1				
2	6BH–12181–10	CAMSHAFT 2	1	1				
3	6ET–12176–00	SPROCKET, CAM CHAIN	2	2				
4	90105–07006	BOLT, FLANGE	4	4				
5	6S5–12111–00	VALVE, INTAKE	8	8				
6	6S5–12121–00	VALVE, EXHAUST	8	8				
7	6S5–12116–00	SEAT, VALVE SPRING	16	16				
8	6S5–12113–00	SPRING, VALVE INNER	16	16				
9	6S5–12117–00	RETAINER, VALVE SPRING	16	16				
10	3LD–12118–00	LOCK, VALVE SPRING RETAINER	32	32				
11	51Y–12119–00	SEAL, VALVE STEM	16	16				
12	3LD–12168–00	PAD, ADJUSTING (1.20)	16	16				UR
	3LD–12168–20	PAD, ADJUSTING (1.25)	16	16				UR
	3LD–12168–40	PAD, ADJUSTING (1.30)	16	16				UR
	3LD–12168–60	PAD, ADJUSTING (1.35)	16	16				UR
	3LD–12168–80	PAD, ADJUSTING (1.40)	16	16				UR
	3LD–12168–A0	PAD, ADJUSTING (1.45)	16	16				UR
	3LD–12168–F0	PAD, ADJUSTING (1.50)	16	16				UR
	3LD–12168–H1	PAD, ADJUSTING (1.55)	16	16				UR
	3LD–12168–K1	PAD, ADJUSTING (1.60)	16	16				UR
	3LD–12168–M1	PAD, ADJUSTING (1.65)	16	16				UR
	3LD–12168–R1	PAD, ADJUSTING (1.70)	16	16				UR
	3LD–12168–U1	PAD, ADJUSTING (1.75)	16	16				UR
	3LD–12168–W1	PAD, ADJUSTING (1.80)	16	16				UR
	3LD–12168–Y1	PAD, ADJUSTING (1.85)	16	16				UR
	3LD–12169–11	PAD, ADJUSTING (1.90)	16	16				UR
	3LD–12169–31	PAD, ADJUSTING (1.95)	16	16				UR

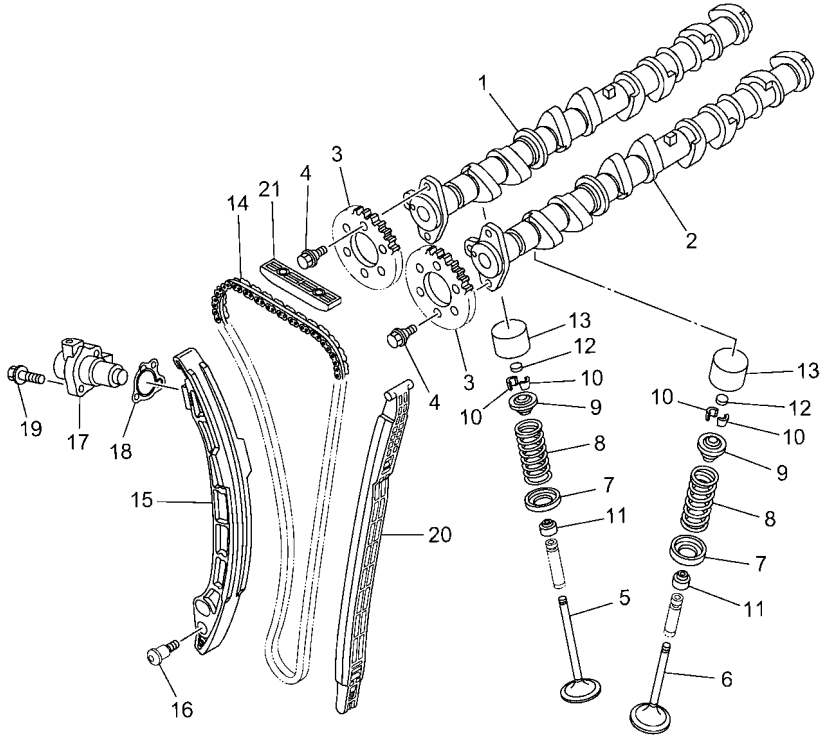

F7K1110-Z050

FIG. 5 VALVE

REF. NO.	PART NO.	DESCRIPTION	F7K2	F7K3				REMARKS
12	3LD–12169–50	PAD, ADJUSTING (2.00)	16	16				UR
	3LD–12169–70	PAD, ADJUSTING (2.05)	16	16				UR
	3LD–12169–90	PAD, ADJUSTING (2.10)	16	16				UR
	3LD–12169–E0	PAD, ADJUSTING (2.15)	16	16				UR
	3LD–12169–G0	PAD, ADJUSTING (2.20)	16	16				UR
	3LD–12169–J0	PAD, ADJUSTING (2.25)	16	16				UR
	3LD–12169–L0	PAD, ADJUSTING (2.30)	16	16				UR
13	6S5–12153–00	LIFTER, VALVE	16	16				
14	94591–74152	CHAIN	1	1				
15	6ET–12252–00	DAMPER, CHAIN 2	1	1				
16	90109–06344	BOLT	1	1				
17	6LE–12210–00	TENSIONER ASSY, CAM CHAIN	1	1				
18	6LE–12213–00	GASKET, TENSIONER CASE	1	1				
19	91380–06025	BOLT	2	2				
20	6ET–12251–00	DAMPER, CHAIN 1	1	1				
21	6BH–12241–00	GUIDE, STOPPER 2	1	1				

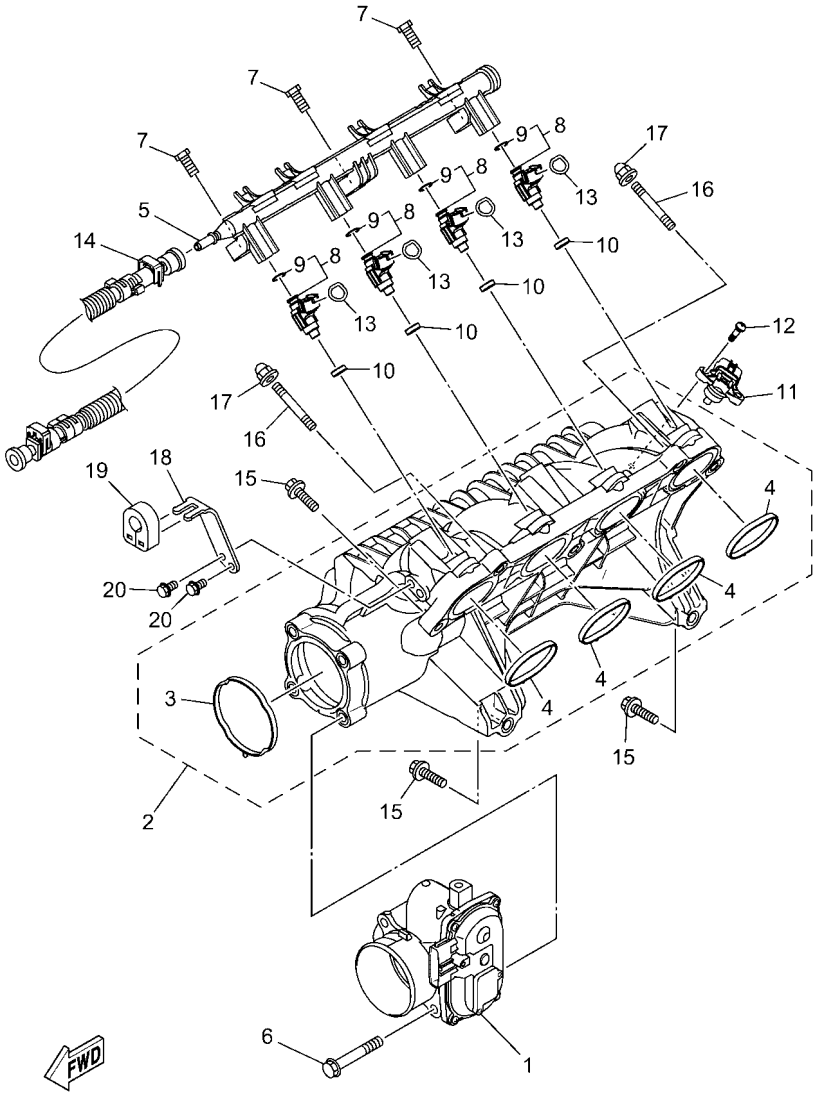

F7K1110-Z060

FIG. 6 INTAKE 1

REF. NO.	PART NO.	DESCRIPTION	F7K2	F7K3				REMARKS
1	6LE–13750–00	THROTTLE BODY ASSY	1	1				
2	6LE–13641–00	MANIFOLD, INTAKE 1	1	1				
3	6LE–14156–00	.GASKET, INSULATING	1	1				
4	6LE–14126–00	.GASKET	4	4				
5	6LE–12880–00	DELIVERY PIPE	1	1				
6	90105–08243	BOLT, FLANGE	4	4				
7	6CS–14446–00	BOLT	3	3				
8	6S5–13761–10	INJECTOR	4	4				
9	68V–1416A–00	.O-RING	1	1				
10	8FP–13556–10	GASKET, MANIFOLD	4	4				
11	6LE–83688–00	SENSOR ASSY	1	1				
12	6D3–81147–00	SCREW 3	2	2				
13	93210–13003	O-RING	4	4				
14	6AN–2450B–10	FUEL HOSE ASSY	1	1				
15	97513–08535	BOLT, WITH WASHER	5	5				
16	90116–08032	BOLT, STUD	2	2				
17	90176–08080	NUT, CAP	2	2				
18	6LE–14572–00	PLATE, STAY	1	1				
19	6CS–14445–01	GROMMET	1	1				
20	95E33–06012	BOLT, FLANGE D/R (SMALL HEAD)	2	2				

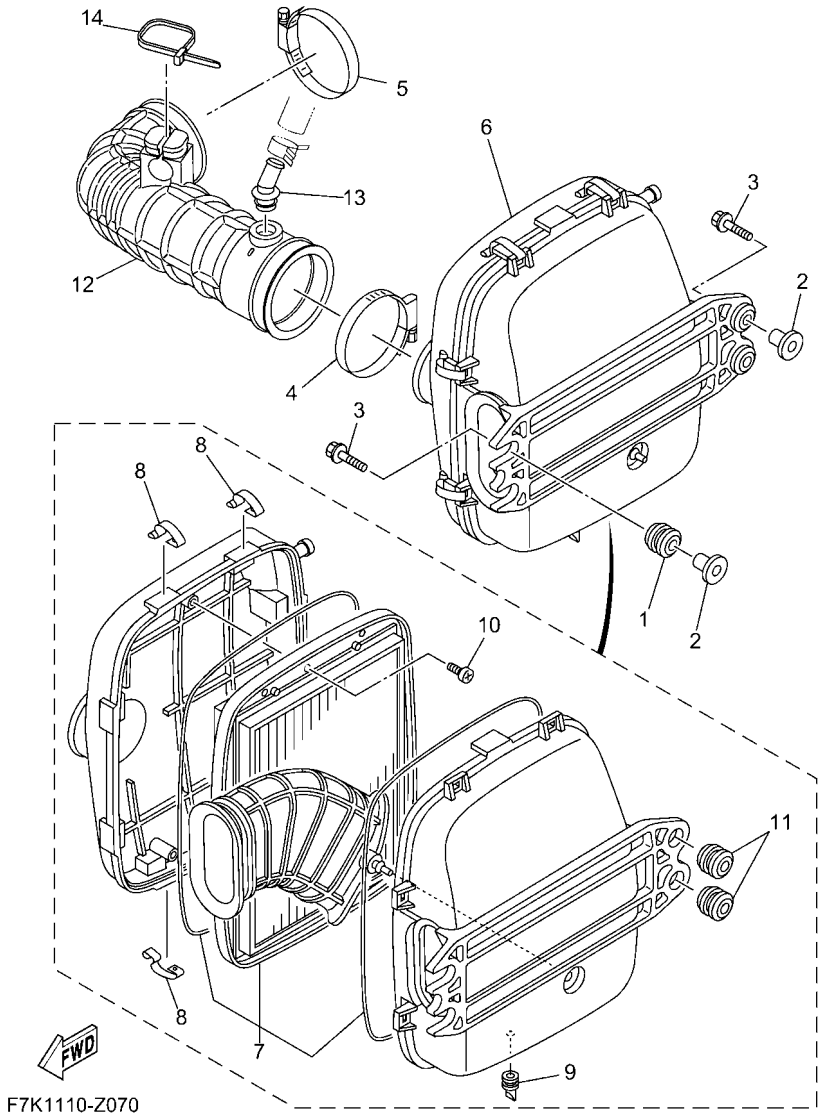

FIG. 7 INTAKE 2

REF. NO.	PART NO.	DESCRIPTION	F7K2	F7K3				REMARKS
1	90480–22M15	GROMMET	2	2				
2	90387–08M37	COLLAR	4	4				
3	90119–08187	BOLT, WITH WASHER	4	4				
4	90450–90002	HOSE CLAMP ASSY	1	1				
5	90450–90002	HOSE CLAMP ASSY	1	1				
6	6S5–E4410–02	AIR CLEANER ASSY.	1	1				
7	6S5–E4451–01	.ELEMENT, AIR CLEANER	1	1				
8	6S5–E4436–00	.HOOK	8	8				
9	6S5–G2717–00	.RUBBER, SEAL 2	1	1				
10	97780–60516	.SCREW, TAPPING	3	3				
11	90480–22801	.GROMMET	2	2				
12	6LE–E4419–00	PIPE	1	1				
13	6BH–R1142–10	CONNECTION	1	1				
14	90464–40825	CLAMP	1	1				

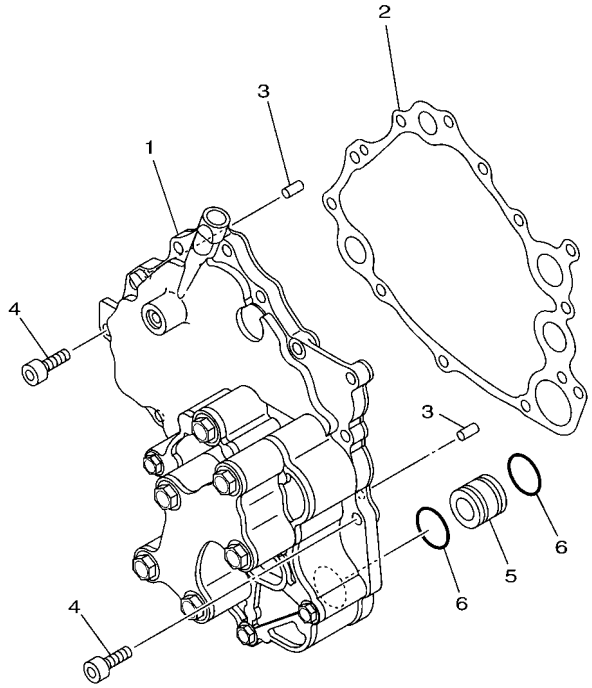

F2M7100-L080

FIG. 8 OIL PUMP

REF. NO.	PART NO.	DESCRIPTION	F7K2	F7K3				REMARKS
1	6BH–13300–12	OIL PUMP ASSY	1	1				
2	6S5–13563–00	GASKET	1	1				
3	93606–12019	PIN, DOWEL	2	2				
4	90110–06404	BOLT, HEXAGON SOCKET HEAD	12	12				
5	6S5–13446–10	CONNECTOR	1	1				
6	93210–21631	O-RING	2	2				

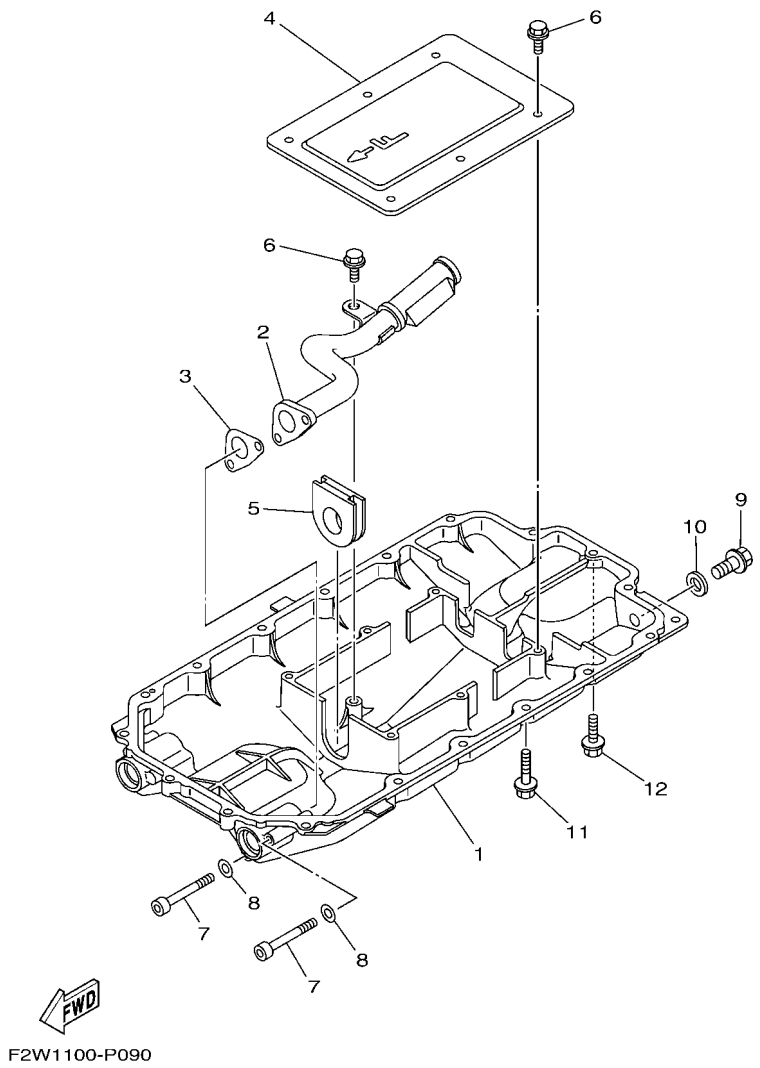

FIG. 9 OIL PAN

REF. NO.	PART NO.	DESCRIPTION	F7K2	F7K3				REMARKS
1	6S5–1310A–25	PAN, OIL	1	1				
2	6S5–13405–11	OIL PIPE COMP. 1	1	1				
3	6S5–13477–00	GASKET	1	1				
4	6S5–13317–10	PLATE, BAFFLE	1	1				
5	6S5–15486–10	GROMMET	1	1				
6	95817–06014	BOLT, FLANGE	7	7				
7	91314–06060	BOLT, HEXAGON SOCKET HEAD	2	2				
8	90201–06028	WASHER, PLATE	2	2				
9	95814–08020	BOLT, FLANGE	1	1				
10	90430–08209	GASKET	1	1				
11	95E34–06035	BOLT, FLANGE DEEP RECESS	17	17				
12	95E34–06020	BOLT, FLANGE DEEP RECESS	1	1				

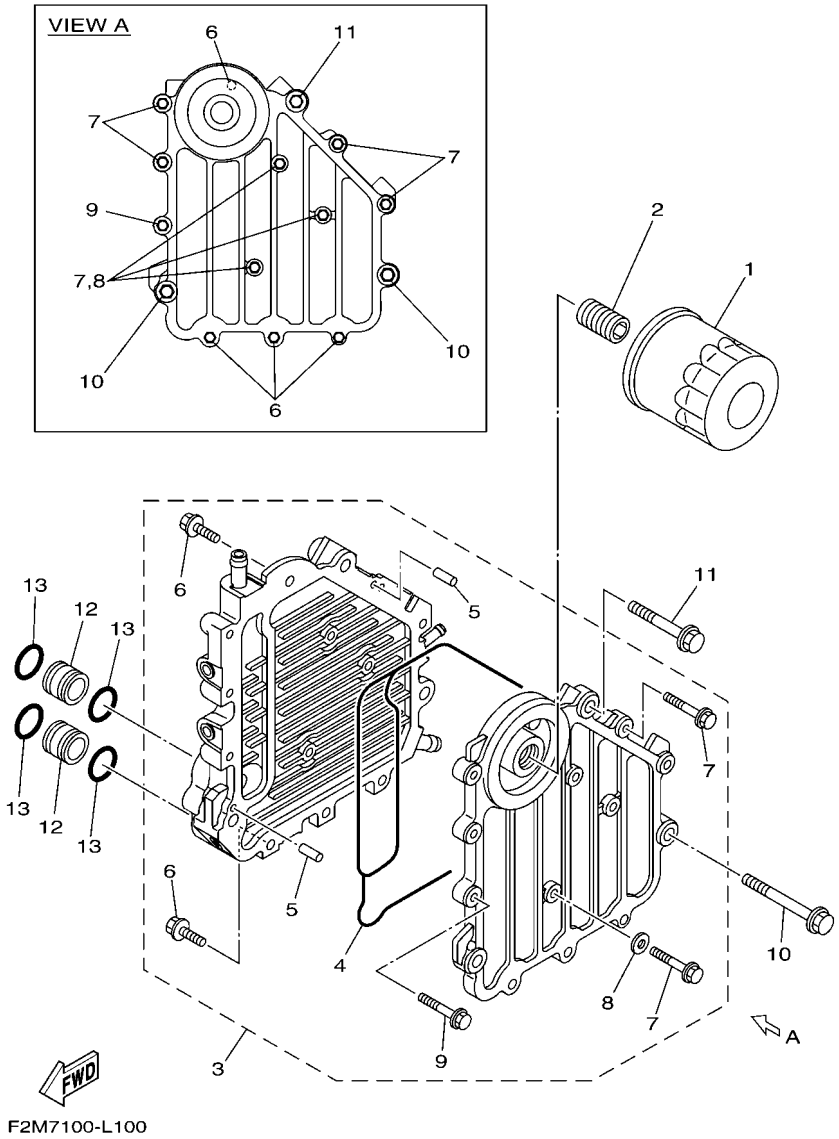

FIG. 10 OIL COOLER

REF. NO.	PART NO.	DESCRIPTION	F7K2	F7K3				REMARKS
1	69J–13440–04	ELEMENT ASSY, OIL CLEANER	1	1				
2	6S5–12858–00	BOLT, UNION	1	1				
3	6BH–13470–21	OIL COOLER ASSY	1	1				
4	6BH–13556–00	.GASKET, MANIFOLD	1	1				
5	93604–10M03	.PIN, DOWEL	2	2				
6	90105–06184	.BOLT, FLANGE	4	4				
7	90105–06185	.BOLT, FLANGE	7	7				
8	90430–06232	.GASKET	3	3				
9	90105–08054	.BOLT, FLANGE	1	1				
10	90105–08169	BOLT, FLANGE	2	2				
11	90105–08170	BOLT, FLANGE	1	1				
12	60E–13446–00	CONNECTOR	2	2				
13	93210–18322	O-RING	4	4				

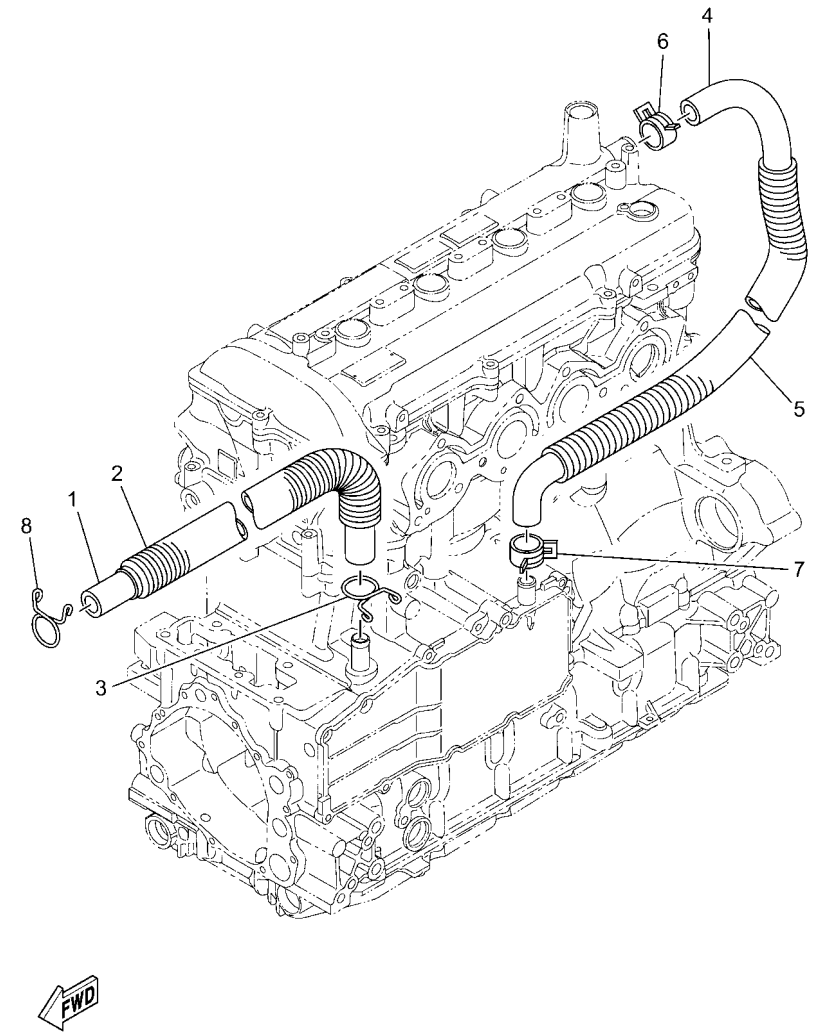

F7K1110-Z110

FIG. 11 BREATHER OIL

REF. NO.	PART NO.	DESCRIPTION	F7K2	F7K3				REMARKS
1	6S5–11166–10	PIPE, BREATHER 1	1	1				
2	90447–22015	TUBE (L410)	1	1				
3	90467–190A0	CLIP	1	1				
4	6S5–11167–10	PIPE, BREATHER 2	1	1				
5	90447–22016	TUBE (L490)	1	1				
6	90467–240A0	CLIP	1	1				
7	90467–200A3	CLIP	1	1				
8	90467–190A0	CLIP	1	1				

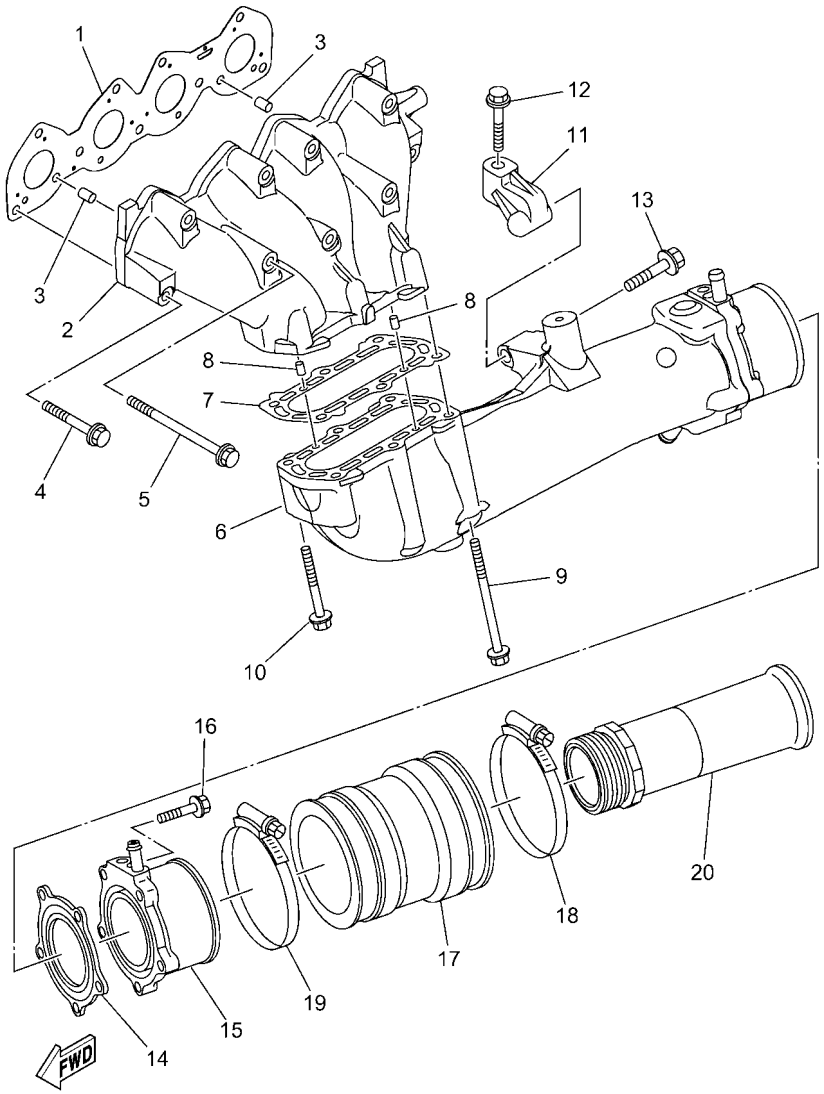

F7K1110-Z120

FIG. 12 EXHAUST 1

REF. NO.	PART NO.	DESCRIPTION	F7K2	F7K3				REMARKS
1	6LE–14613–00	GASKET, EXHAUST PIPE	1	1				
2	6LE–14711–00	MUFFLER 1	1	1				
3	93608–16M16	PIN, DOWEL	2	2				
4	90119–08034	BOLT, WITH WASHER	6	6				
5	90119–08097	BOLT, WITH WASHER	3	3				
6	6LE–14721–00	MUFFLER 2	1	1				
7	6S5–14739–00	GASKET, MUFFLER DAMPER 1	1	1				
8	93606–12019	PIN, DOWEL	2	2				
9	90119–08097	BOLT, WITH WASHER	4	4				
10	90119–08034	BOLT, WITH WASHER	2	2				
11	6S5–14771–00	STAY, MUFFLER 1	1	1				
12	90119–08096	BOLT, WITH WASHER	1	1				
13	90119–10076	BOLT, WITH WASHER	1	1				
14	6BH–14749–00	GASKET, MUFFLER DAMPER 2	1	1				
15	6BH–14784–01	PIPE, TAIL	1	1				
16	95E34–08035	BOLT, FLANGE DEEP RECESS	5	5				
17	6S5–E4752–01	PIPE, OUTLET	1	1				
18	90450–99808	HOSE CLAMP ASSY	1	1				
19	90450–99809	HOSE CLAMP ASSY	1	1				
20	6CS–1475A–00	PIPE 1	1	1				

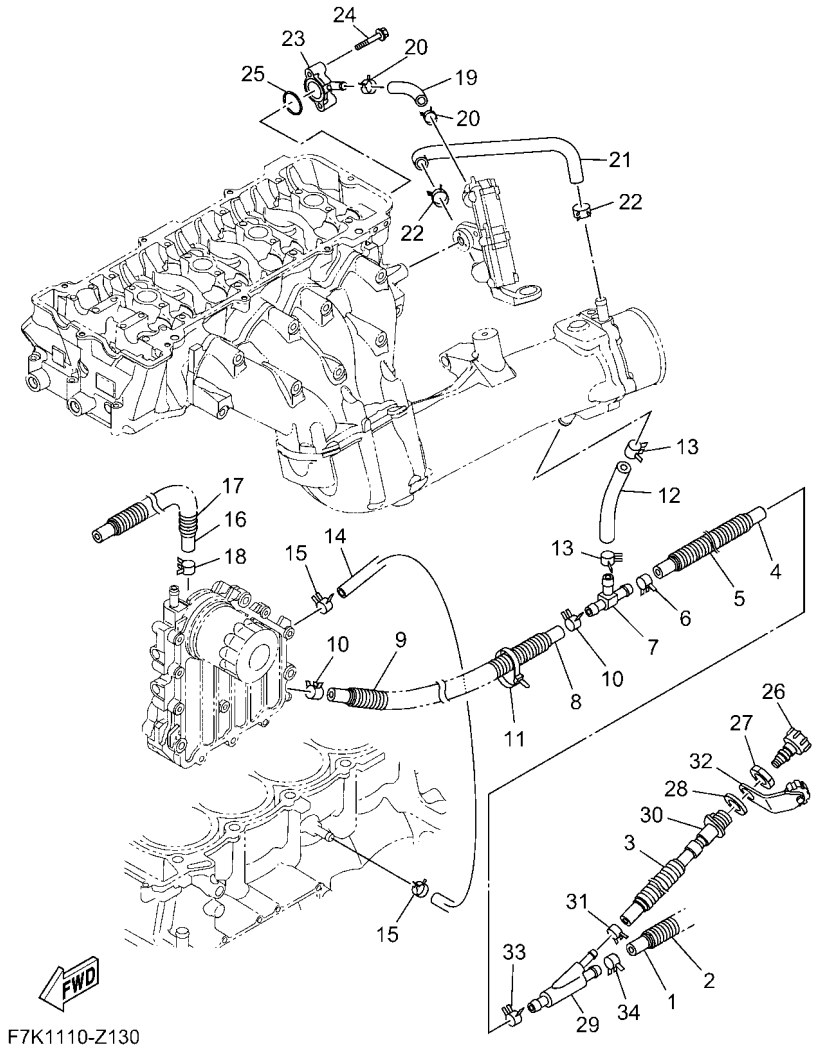

F7K1110-Z130

FIG. 13 EXHAUST 2

REF. NO.	PART NO.	DESCRIPTION	F7K2	F7K3				REMARKS
1	F3X–U1273–00	HOSE	1	1				
2	90447–22801	TUBE (L200)	1	1				
3	90447–19801	TUBE (L485)	1	1				
4	6S5–1243E–01	HOSE 2	1	1				
5	F2T–U773D–00	TUBE	1	1				
6	90467–200A3	CLIP	1	1				
7	6BH–12584–00	JOINT, HOSE 3	1	1				
8	90445–18012	HOSE (L400)	1	1				
9	90447–19005	TUBE (L260)	1	1				
10	90467–160A0	CLIP	2	2				
11	90464–35132	CLAMP	1	1				
12	6S5–12589–01	HOSE 6	1	1				
13	90467–200A3	CLIP	2	2				
14	6LE–1244H–00	HOSE 5	1	1				
15	90467–141A3	CLIP	2	2				
16	6CS–12588–00	HOSE 5	1	1				
17	90447–19018	TUBE (L760)	1	1				
18	90467–160A0	CLIP	1	1				
19	90445–16027	HOSE (L100)	1	1				
20	90467–141A3	CLIP	2	2				
21	6LE–12576–00	HOSE 1	1	1				
22	90467–160A0	CLIP	2	2				
23	6LE–1246A–00	COVER 1	1	1				
24	90105–06035	BOLT, FLANGE	2	2				
25	93210–30M31	O-RING	1	1				
26	67X–E2590–10	CONDUCTION ASSY	1	1				
27	EU0–61652–00	NUT	1	1				

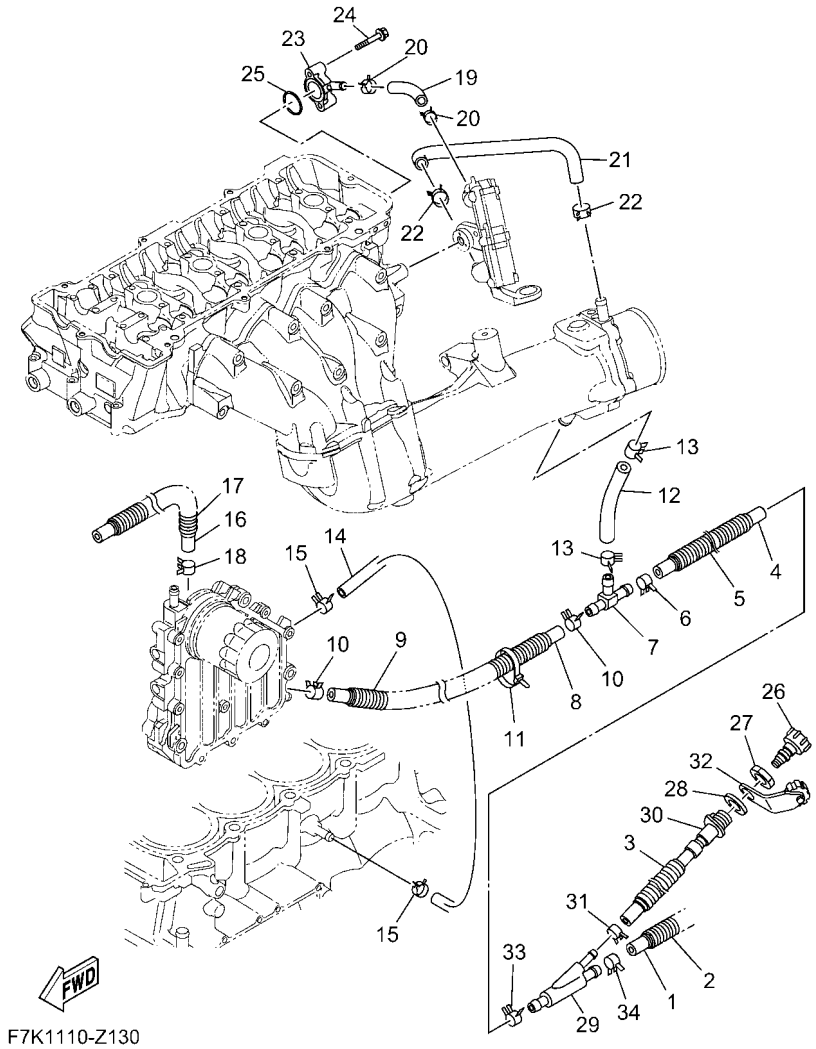

F7K1110-Z130

FIG. 13 EXHAUST 2

REF. NO.	PART NO.	DESCRIPTION	F7K2	F7K3				REMARKS
28	F2S–U7525–01	PACKING	1	1				
29	60E–12581–00	JOINT, HOSE 1	1	1				
30	64T–12580–00	JOINT ASSY	1	1				
31	90467–150A5	CLIP	1	1				
32	6EY–84385–00	CAP,1	1	1				
33	90467–200A3	CLIP	1	1				
34	90467–200A3	CLIP	1	1				

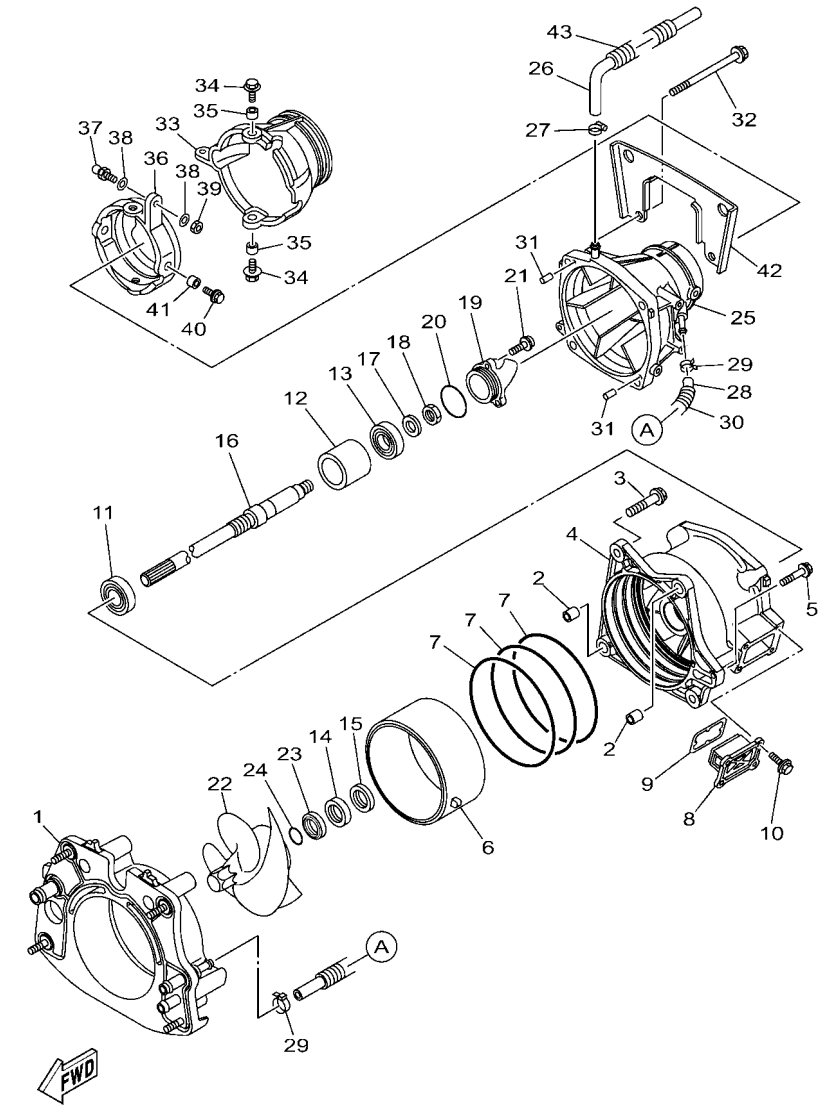

F7K1110-Z140

FIG. 14 JET UNIT 1

REF. NO.	PART NO.	DESCRIPTION	F7K2	F7K3				REMARKS
1	6CS–G5831–20	PLATE, TRANSOM	1	1				
2	99590–14016	PIN, DOWEL	2	2				
3	90119–10810	BOLT, WITH WASHER	4	4				
4	6HM–R1312–10	HOUSING, IMPELLER	1	1				
5	90119–06893	BOLT, WITH WASHER	1	1				
6	6HH–R1337–00	SLEEVE, IMPELLER	1	1				
7	93211–65801	O-RING	3	3				
8	6GN–G6882–00	FILTER	1	1				
9	66V–42414–00	O-RING	1	1				
10	90119–06889	BOLT, WITH WASHER	4	4				
11	93306–206Y7	BEARING	1	1				
12	6CS–G5538–00	SPACER 1	1	1				
13	93306–355Y0	BEARING	1	1				
14	93102–31009	OIL SEAL	1	1				
15	93101–31001	OIL SEAL	1	1				
16	6S5–G5511–00	SHAFT, DRIVE	1	1				
17	92990–20600	WASHER	1	1				
18	95312–20700	NUT	1	1				
19	6AN–R1326–00	CAP	1	1				
20	93210–54010	O-RING	1	1				
21	90110–06822	BOLT, HEXAGON SOCKET HEAD	3	3				
22	6LE–R1321–00	IMPELLER	1	1				
23	6BH–R1348–00	SPACER	1	1				
24	93210–30611	O-RING	1	1				
25	6BH–R1318–01	NOZZLE	1	1				
26	6CS–U72M2–00	HOSE 1	1	1				
27	90601–118UF	BAND, HOSE 18	1	1				

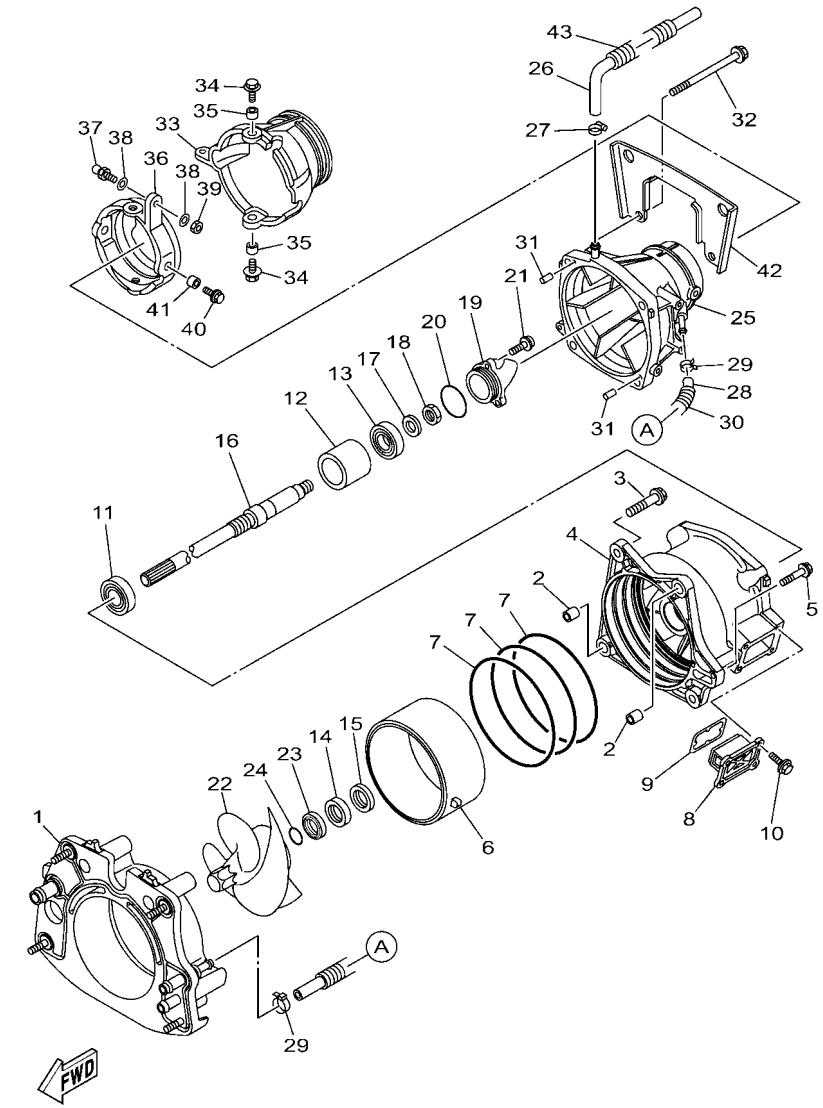

F7K1110-Z140

FIG. 14 JET UNIT 1

REF. NO.	PART NO.	DESCRIPTION	F7K2	F7K3				REMARKS
28	6ET–U215E–00	HOSE	1	1				
29	90465–11829	CLAMP	2	2				
30	90447–15001	HOSE, WITH SPRING (L205)	1	1				
31	93606–12019	PIN, DOWEL	2	2				
32	90119–10810	BOLT, WITH WASHER	4	4				
33	6S5–R1313–01	NOZZLE, DEFLECTOR	1	1				
34	90119–08851	BOLT, WITH WASHER	2	2				
35	90387–08M06	COLLAR	2	2				
36	6AN–R1190–00	RING,TRIM	1	1				
37	6ET–U1461–10	STUD, JOINT BALL	1	1				
38	90201–068M4	WASHER, PLATE	2	2				
39	95380–06700	NUT	1	1				
40	90119–08851	BOLT, WITH WASHER	2	2				
41	90387–08M06	COLLAR	2	2				
42	6EY–R1959–00	BRACKET	1	1				
43	6CN–U773D–01	TUBE	1	1				

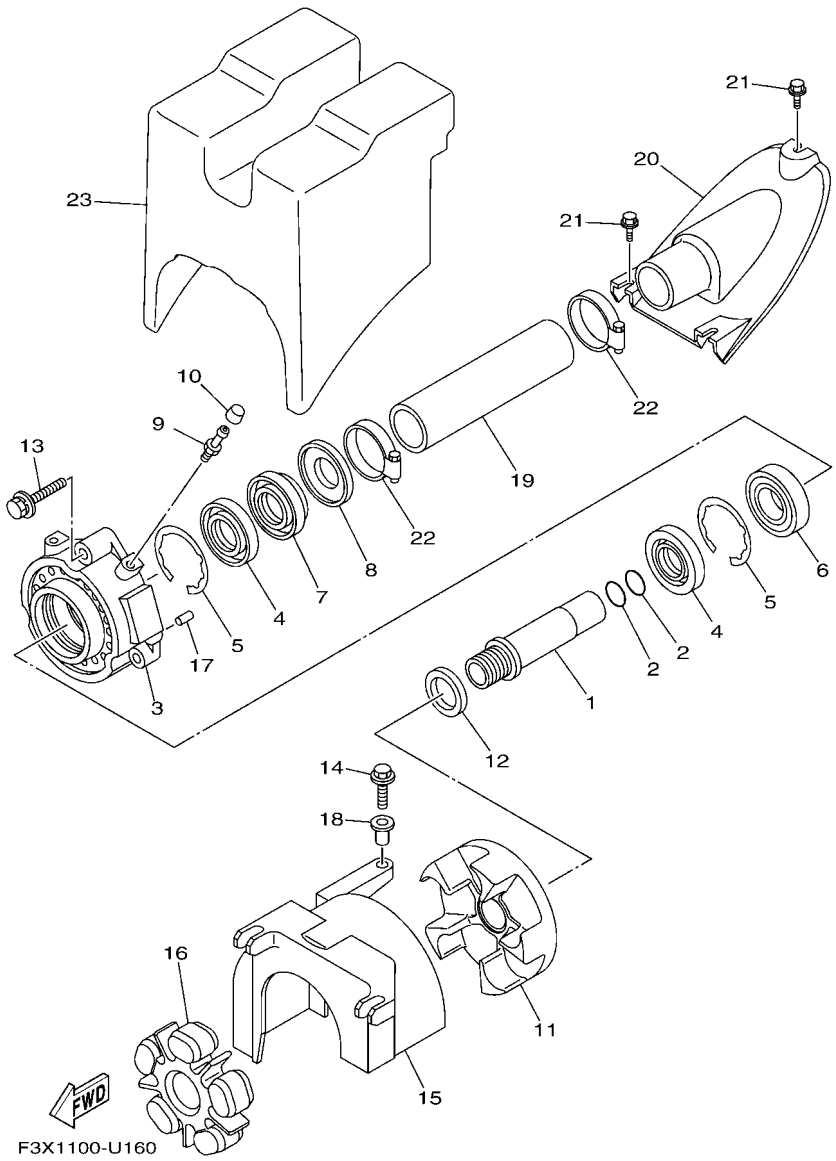

FIG. 15 JET UNIT 2

REF. NO.	PART NO.	DESCRIPTION	F7K2	F7K3				REMARKS
1	6S5–R1323–00	SHAFT, COUPLER	1	1				
2	93210–22MF1	O-RING	2	2				
3	6S5–G5332–00	HOUSING, BEARING	1	1				
4	93102–29008	OIL SEAL	2	2				
5	99009–62500	CIRCLIP	2	2				
6	93306–206Y8	BEARING	1	1				
7	93102–29009	OIL SEAL	1	1				
8	6ET–45613–00	WASHER, THRUST	1	1				
9	93700–06M03	NIPPLE, GREASE	1	1				
10	663–45119–00	CAP, GREASE NIPPLE	1	1				
11	6S5–G5593–00	FLANGE, COUPLING 1	1	1				
12	6ET–E2289–00	WASHER	1	1				
13	90119–089UU	BOLT, WITH WASHER	3	3				
14	90119–06891	BOLT, WITH WASHER	1	1				
15	6S5–R1381–01	COVER	1	1				
16	6BH–4581J–01	RUBBER SHAFT COUPLING	1	1				
17	93606–12019	PIN, DOWEL	2	2				
18	90387–06289	COLLAR	1	1				
19	F2S–U883B–00	PIPE 1	1	1				
20	F2S–U883E–00	JOINT, PIPE	1	1				
21	90109–06832	BOLT	3	3				
22	90601–152U3	BAND, HOSE 52	2	2				
23	F3X–U892D–00	FLOTATION, STERN RH	1	1				

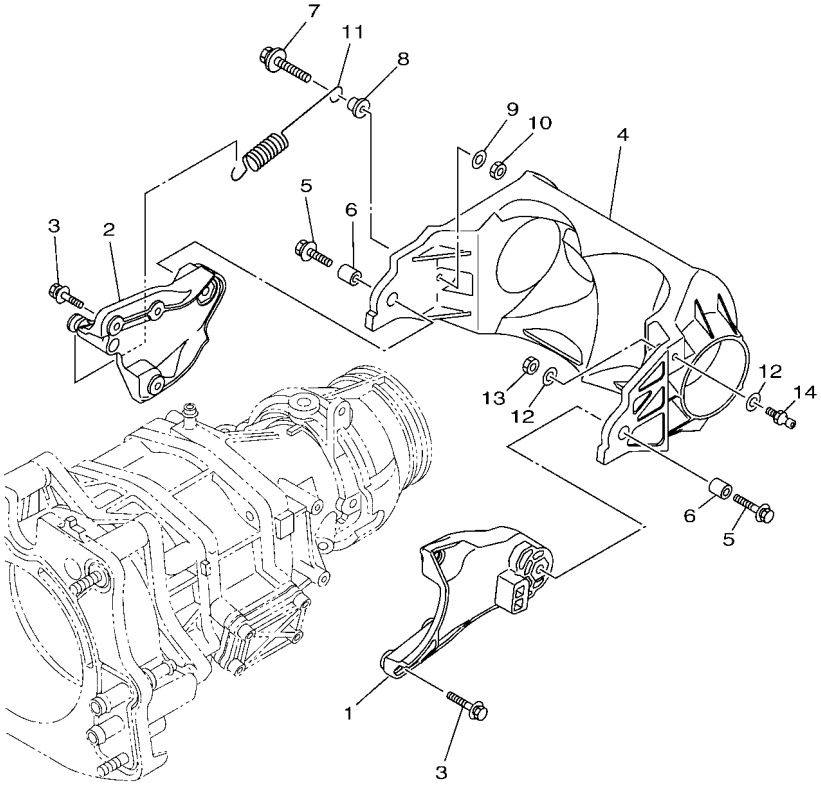

F2TS100-T160

FIG. 16 JET UNIT 3

REF. NO.	PART NO.	DESCRIPTION	F7K2	F7K3				REMARKS
1	6ET–R1341–10	BRACKET 1	1	1				
2	6ET–R1342–10	BRACKET 2	1	1				
3	90119–06891	BOLT, WITH WASHER	6	6				
4	6ET–R1314–10	GATE, REVERSE	1	1				
5	90119–08840	BOLT, WITH WASHER	2	2				
6	90387–08M30	COLLAR	2	2				
7	90119–069UX	BOLT, WITH WASHER	1	1				
8	90387–06319	COLLAR	1	1				
9	90201–06801	WASHER, PLATE	1	1				
10	95380–06600	NUT, HEXAGON	1	1				
11	6S5–R2358–00	SPRING, RETAINER	1	1				
12	90201–06801	WASHER, PLATE	2	2				
13	95380–06600	NUT, HEXAGON	1	1				
14	6GA–U1461–10	STUD, JOINT BALL	1	1				

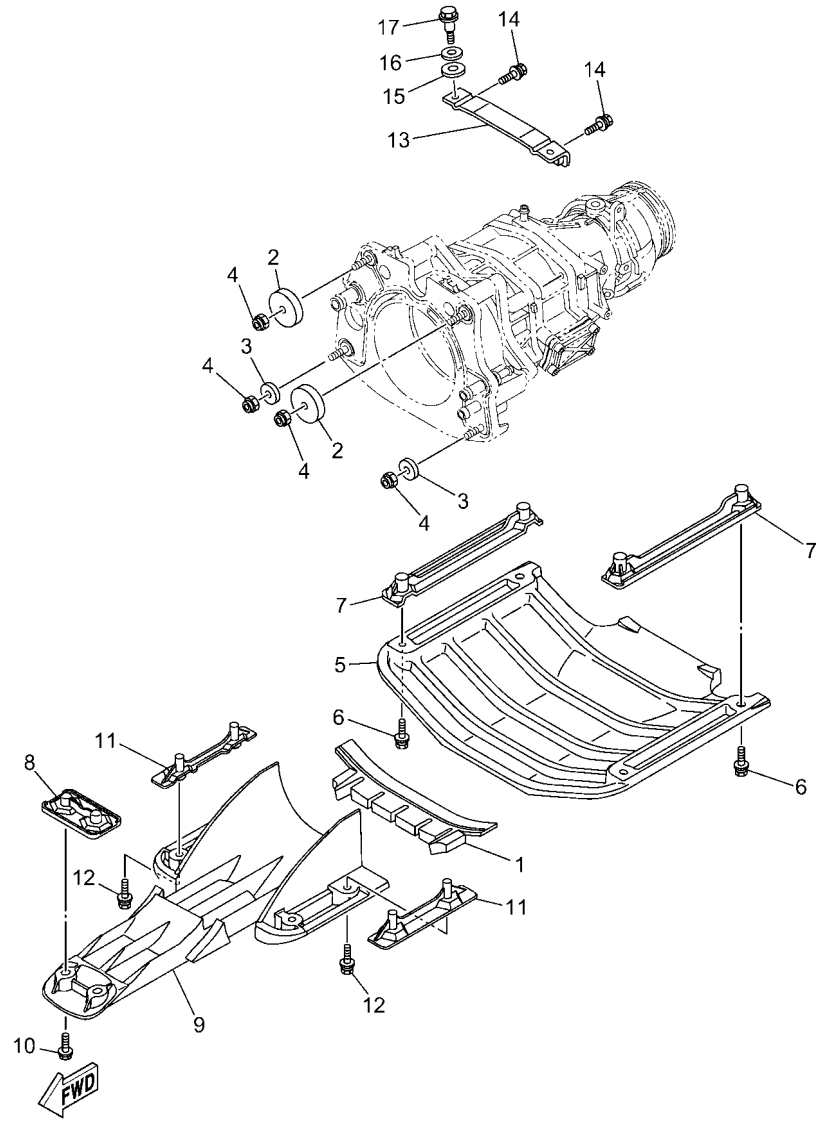

F7K1110-Z170

FIG. 17 JET UNIT 4

REF. NO.	PART NO.	DESCRIPTION	F7K2	F7K3				REMARKS
1	F2S–U72C0–01	SPACER	1	1				
2	F1S–U725E–01	WASHER	2	2				
3	90201–10801	WASHER, PLATE	2	2				
4	9572R–10300	NUT, NYLON	4	4				
5	F3V–U273B–00	PLATE 2	1	1				
6	90119–08823	BOLT, WITH WASHER	4	4				
7	F1B–U8572–01	BRACKET 2	2	2				
8	F2S–U8577–00	BRACKET, 3	1	1				
9	6ET–R1333–00	SCREEN, INTAKE	1	1				
10	90119–08823	BOLT, WITH WASHER	2	2				
11	F1G–U8571–02	BRACKET 1	2	2				
12	90119–08823	BOLT, WITH WASHER	4	4				
13	F2C–U7557–01	BRACKET	1	1				
14	90119–089U7	BOLT, WITH WASHER	2	2				
15	90430–12002	GASKET	2	2				
16	92990–12200	WASHER, PLAIN	2	2				
17	90109–08041	BOLT	2	2				

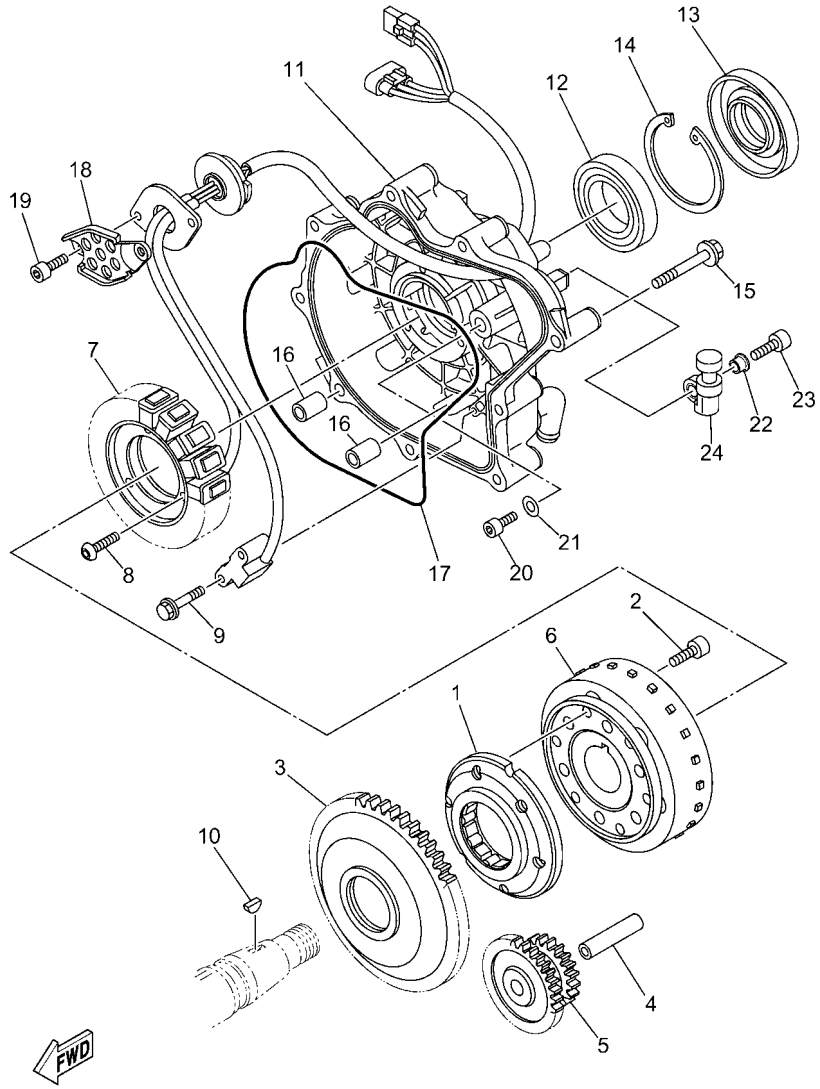

F7K1110-Z180

FIG. 18 GENERATOR

REF. NO.	PART NO.	DESCRIPTION	F7K2	F7K3				REMARKS
1	6S5–15590–00	STARTER ONE-WAY ASSY	1	1				
2	90110–08212	BOLT, HEXAGON SOCKET HEAD	6	6				
3	6LE–15515–00	GEAR 3	1	1				
4	6S5–15521–00	SHAFT 1	1	1				
5	6S5–15517–00	GEAR, IDLER 2	1	1				
6	6LE–81450–00	ROTOR ASSY	1	1				
7	6ET–81410–00	STATOR ASSY	1	1				
8	90149–06229	SCREW	3	3				
9	97513–05514	BOLT, WITH WASHER	2	2				
10	90280–03047	KEY, WOODRUFF	1	1				
11	6S5–81337–31	COVER, FLYWHEEL	1	1				
12	93306–00809	BEARING	1	1				
13	6LE–81167–00	OIL SEAL	1	1				
14	99009–72500	CIRCLIP	1	1				
15	90105–08249	BOLT, FLANGE	9	9				
16	99530–10114	PIN, DOWEL	2	2				
17	6S5–81168–00	O-RING	1	1				
18	6S5–81328–00	CLAMP	1	1				
19	91317–06014	BOLT, HEXAGON SOCKET HEAD	2	2				
20	91317–05010	BOLT, HEXAGON SOCKET HEAD	1	1				
21	90201–052E8	WASHER, PLATE	1	1				
22	90387–06M05	COLLAR	2	2				
23	91380–06020	BOLT	2	2				
24	6S5–81364–11	GROMMET	2	2				

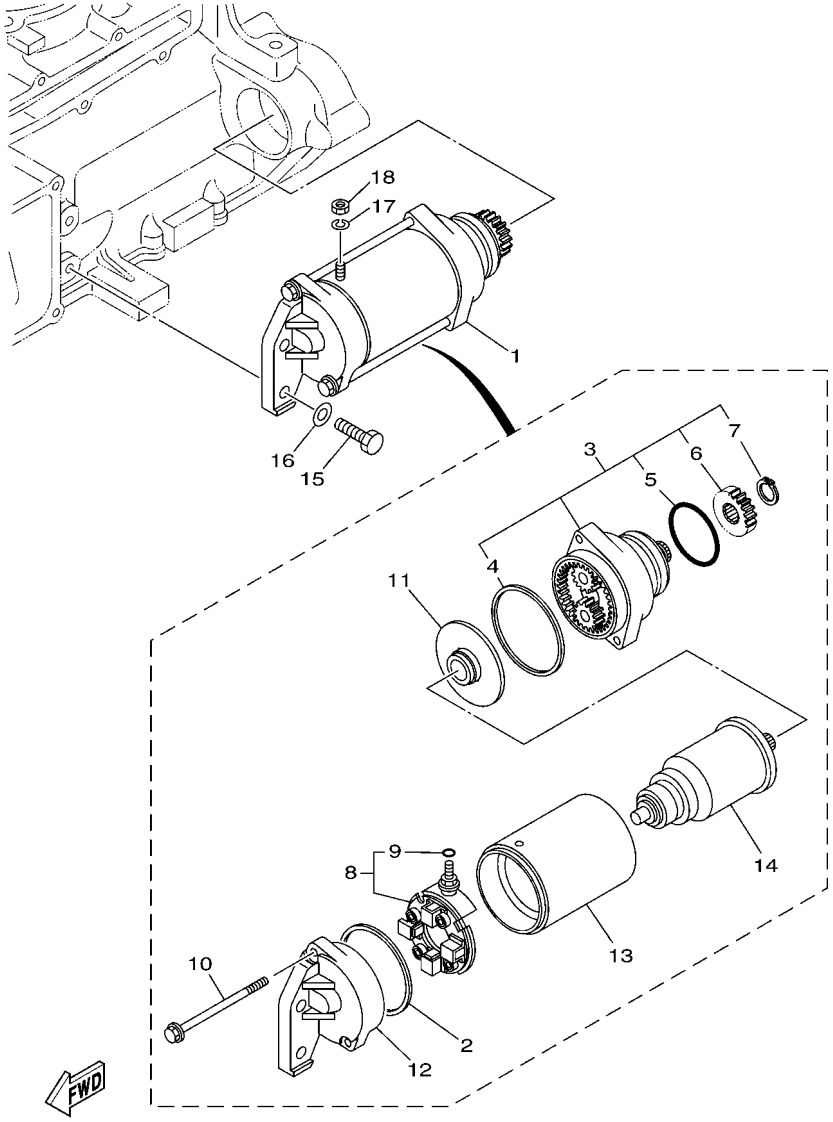

F1W1100-G200

FIG. 19 STARTING MOTOR

REF. NO.	PART NO.	DESCRIPTION	F7K2	F7K3				REMARKS
1	6S5–81800–00	STARTING MOTOR ASSY	1	1				
2	11H–81844–00	.GASKET	1	1				
3	6S5–81830–00	.FRONT BRACKET ASSY	1	1				
4	4G0–81844–00	..GASKET	1	1				
5	1J7–81847–60	..O-RING	1	1				
6	5EL–15511–00	..GEAR, STARTING MOTOR	1	1				
7	93410–12003	..CIRCLIP	1	1				
8	6S5–81840–00	.BRUSH HOLDER ASSY	1	1				
9	3TB–81847–00	..O-RING	1	1				
10	6S5–81826–00	.BOLT	2	2				
11	5EL–81845–00	.PLATE	1	1				
12	6S5–81820–00	.REAR BRACKET ASSY	1	1				
13	6S5–81810–00	.STATOR ASSY	1	1				
14	5A8–81850–10	.ARMATURE ASSY	1	1				
15	97013–08030	BOLT	2	2				
16	92903–08600	WASHER, PLATE	2	2				
17	92990–06100	WASHER, SPRING	1	1				
18	95380–06700	NUT	1	1				

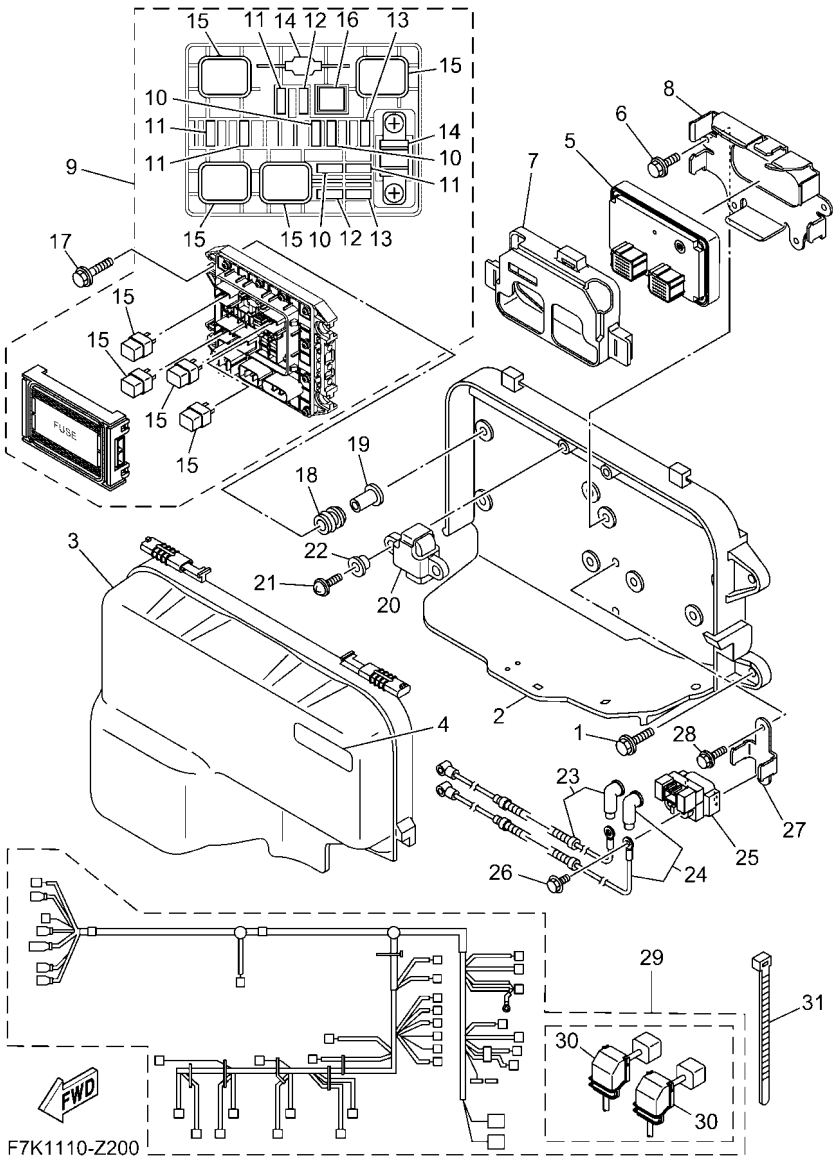

FIG. 20 ELECTRICAL 1

REF. NO.	PART NO.	DESCRIPTION	F7K2	F7K3				REMARKS
1	90119–089UT	BOLT, WITH WASHER	4	4				
2	6CS–81845–11	PLATE	1	1				
3	6S5–81942–21	COVER	1	1				
4	60E–83627–00	LABEL, CAUTION 7	1	1				
5	6LE–8591A–00	ENGINE CONTROL UNIT ASSY	1	1				
6	95814–06012	BOLT, FLANGE	4	4				
7	6EY–8591S–00	GROMMET, ECU	1	1				
8	6ET–81948–00	BRACKET	1	1				
9	6EX–82170–02	FUSE BOX ASSY	1	1				
10	67F–82151–30	.FUSE (3A)	3	3				
11	67F–82151–40	.FUSE (10A)	4	4				
12	67F–82151–00	.FUSE (20A)	2	2				
13	67F–82151–10	.FUSE (30A)	2	2				
14	6EX–82151–00	.FUSE (50A)	2	2				
15	6EX–8195A–00	.RELAY ASSY	4	4				
16	6EX–2812A–00	.PULLER, FUSE	1	1				
17	90119–06311	BOLT, WITH WASHER	4	4				
18	6A0–82317–01	DAMPER, IGNITION COIL	4	4				
19	90387–06119	COLLAR	4	4				
20	6ET–82576–00	SENSOR, LEAN ANGLE	1	1				
21	97780–60025	SCREW, TAPPING	2	2				
22	90387–06M05	COLLAR	2	2				
23	6JP–82115–00	WIRE, PLUS LEAD	1	1				
24	6CS–82117–00	WIRE, LEAD	1	1				
25	1B7–81940–00	STARTER RELAY ASSY (2768102-A)	1	1				
26	97E95–06612	BOLT, HEXAGON W/W DEEP RECESS	2	2				
27	6CS–81953–00	STAY, RELAY	1	1				

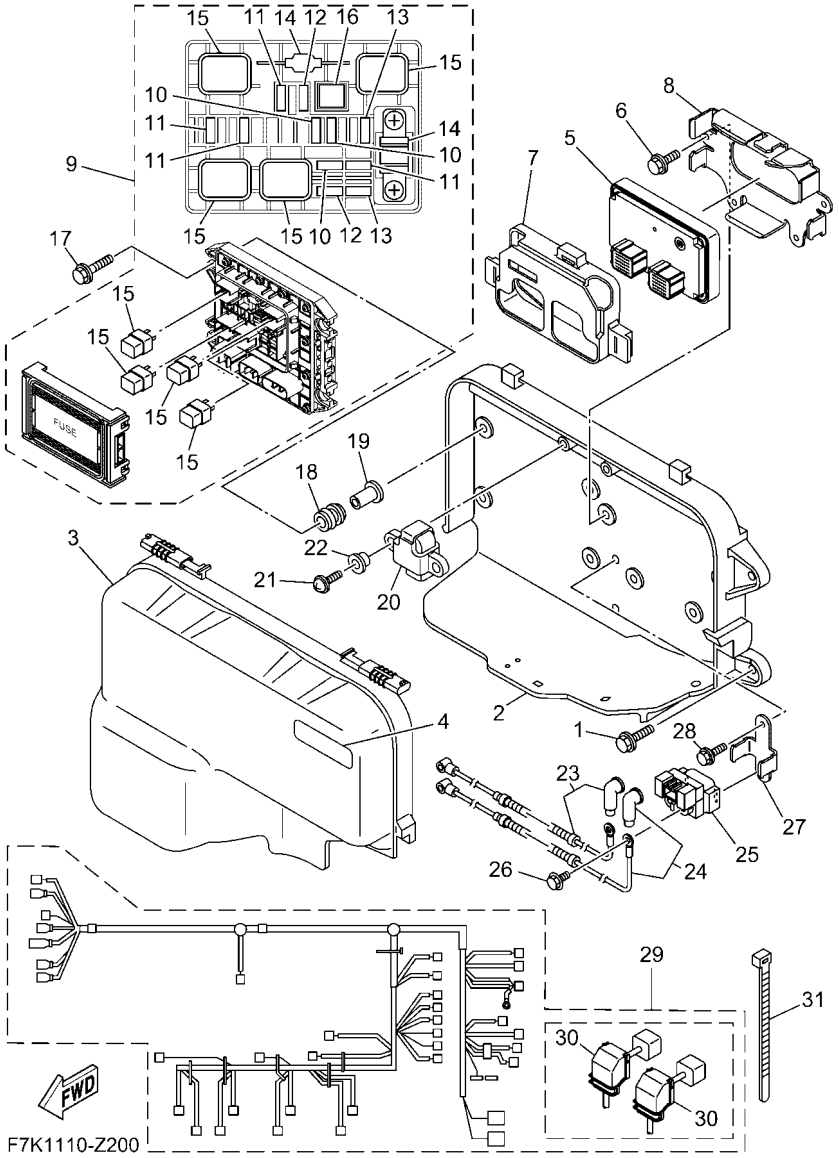

FIG. 20 ELECTRICAL 1

REF. NO.	PART NO.	DESCRIPTION	F7K2	F7K3				REMARKS
28	95814–06012	BOLT, FLANGE	2	2				
29	6LE–8259L–02	WIRE HARNESS ASSY 1	1	1				
30	6EM–82599–00	.COVER, CONNECTOR	2	2				
31	90465–14M66	CLAMP	1	1				

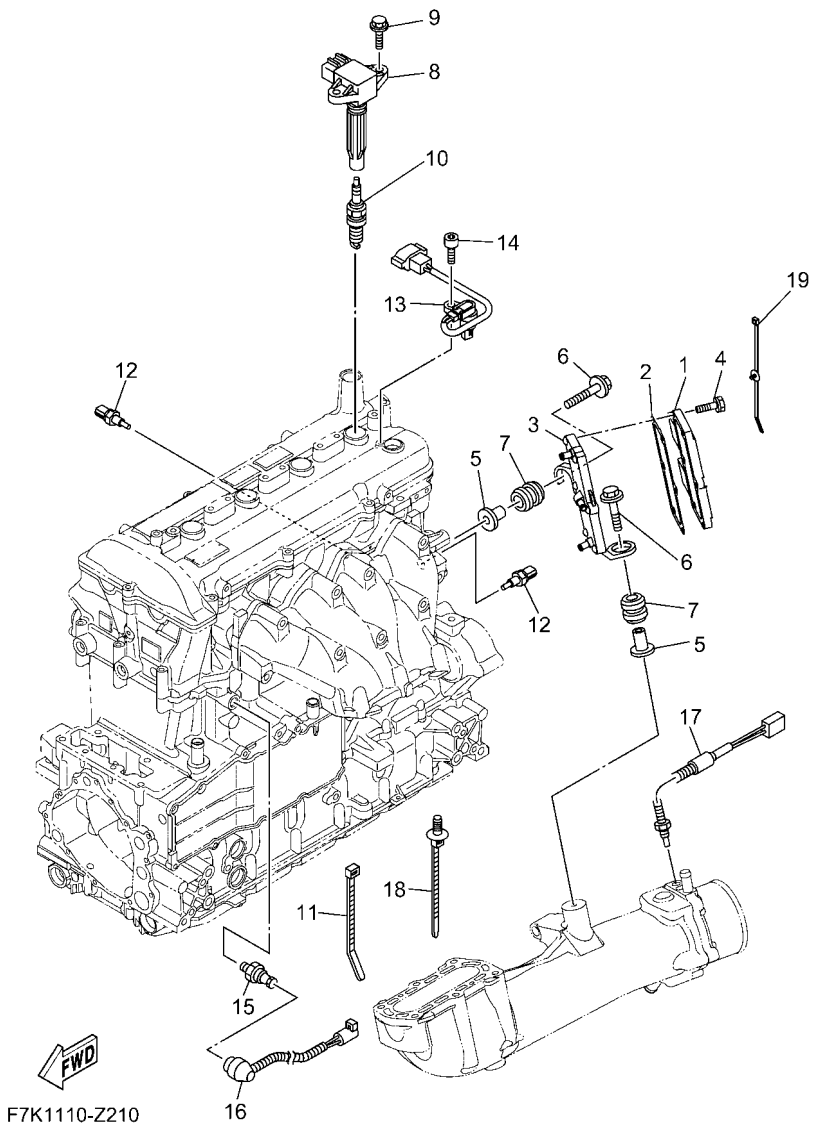

FIG. 21 ELECTRICAL 2

REF. NO.	PART NO.	DESCRIPTION	F7K2	F7K3				REMARKS
1	6EK–81960–10	RECTIFIER & REGULATOR ASSY	1	1				
2	6ET–81975–01	PLATE, RECTIFIER FITTING	1	1				
3	6LE–81972–00	COVER, RECTIFIER	1	1				
4	90119–06MA4	BOLT, WITH WASHER	6	6				
5	90387–08M37	COLLAR	2	2				
6	90119–08187	BOLT, WITH WASHER	2	2				
7	90480–22M15	GROMMET	2	2				
8	6S5–82310–10	IGNITION COIL ASSY	4	4				
9	90105–06903	BOLT, FLANGE	8	8				
10	94702–00427	PLUG, SPARK (NGK LFR6A)	4	4				
11	1UA–82591–00	BAND	7	7				
12	4P9–83591–00	THERMO UNIT	2	2				
13	60E–85896–02	SENSOR, CAM POSITION	1	1				
14	91380–06016	BOLT	1	1				
15	68V–82504–00	OIL PRESSURE SWITCH ASSY	1	1				
16	6S5–81315–01	LEAD WIRE ASSY	1	1				
17	6AA–85790–00	THERMOSENSOR ASSY	1	1				
18	90464–31001	CLAMP	1	1				
19	90464–31002	CLAMP	3	3				

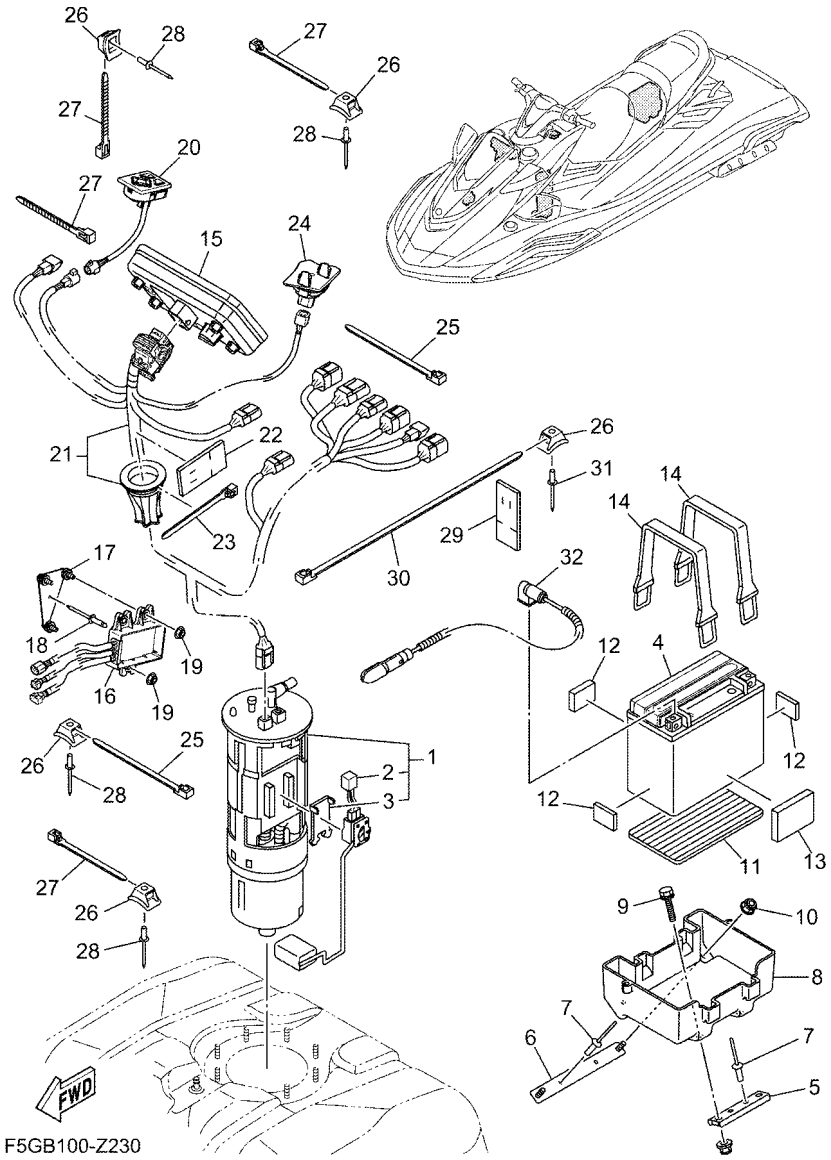

FIG. 22 ELECTRICAL 3

REF. NO.	PART NO.	DESCRIPTION	F7K2	F7K3				REMARKS
1	6S5–13907–05	FUEL PUMP COMP.	1	1				
2	6S5–682E0–10	.FUEL SENDER ASSY	1	1				
3	60E–82556–10	.DAMPER, STOPPER	1	1				
4	5FU–H2100–20	BATTERY ASSY (YUASA YTX20L-BS)	1	1				
5	F2S–U8592–00	PLATE, BASE 2	1	1				
6	F2S–U8593–00	PLATE, BASE 3	1	1				
7	90267–489U1	RIVET,BLIND	4	4				
8	F2S–U8211–00	CASE, BATTERY	1	1				
9	90119–06832	BOLT, WITH WASHER	2	2				
10	F2N–U142L–00	NUT, LOCK	2	2				
11	F1S–U8221–00	PAD, BATTERY	1	1				
12	EU0–U8221–31	PAD, BATTERY	2	2				
13	F7K–U1743–00	PACKING	1	1				
14	F4P–U821D–00	BAND, BATTERY 1	2	2				
15	F7K–U820A–00	METER ASSY	1	1				
16	F5G–HA260–00	CONVERTING UNIT	1	1				
17	F5G–U826C–00	BRACKET	1	1				
18	90267–489U1	RIVET,BLIND	1	1				
19	F2N–U142L–00	NUT, LOCK	3	3				
20	F5G–U8090–01	SWITCH ASSY.	1	1				
21	F5G–U0891–00	WIRE HARNESS,1	1					
	F5G–U0891–10	WIRE HARNESS,1		1				
22	GJ1–U7578–22	PACKING, HOSE 2	1	1				
23	90464–32801	CLAMP	1	1				
24	F5G–U827A–00	MIC ASSY	1					
25	90464–32801	CLAMP	4	4				
26	F1W–U828M–00	BASE, CLAMP	9	9				

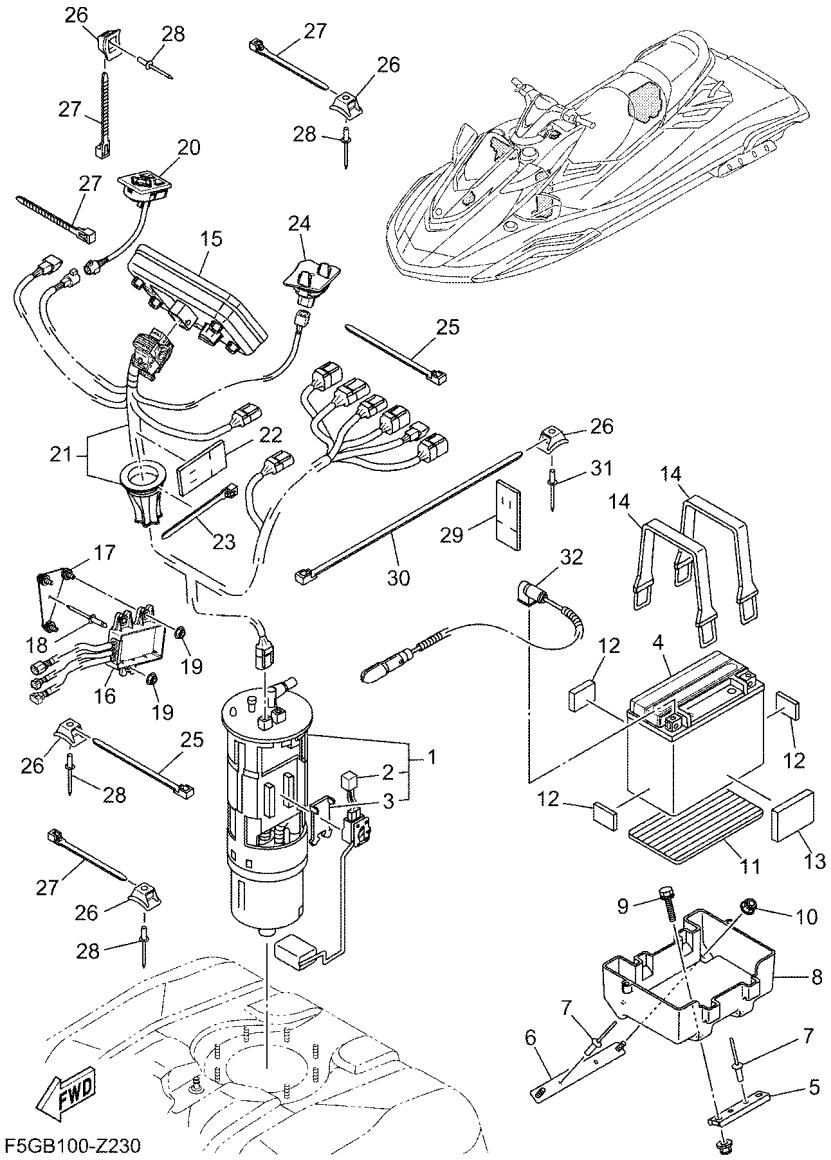

FIG. 22 ELECTRICAL 3

REF. NO.	PART NO.	DESCRIPTION	F7K2	F7K3				REMARKS
27	90464–32801	CLAMP	6	6				
28	90267–48806	RIVET, BLIND	6	6				
29	GJ1–U7578–22	PACKING, HOSE 2	2	2				
30	F5G–U4256–00	CLAMP	3	3				
31	90267–48806	RIVET, BLIND	3	3				
32	6JP–82116–00	WIRE, MINUS LEAD	1	1				

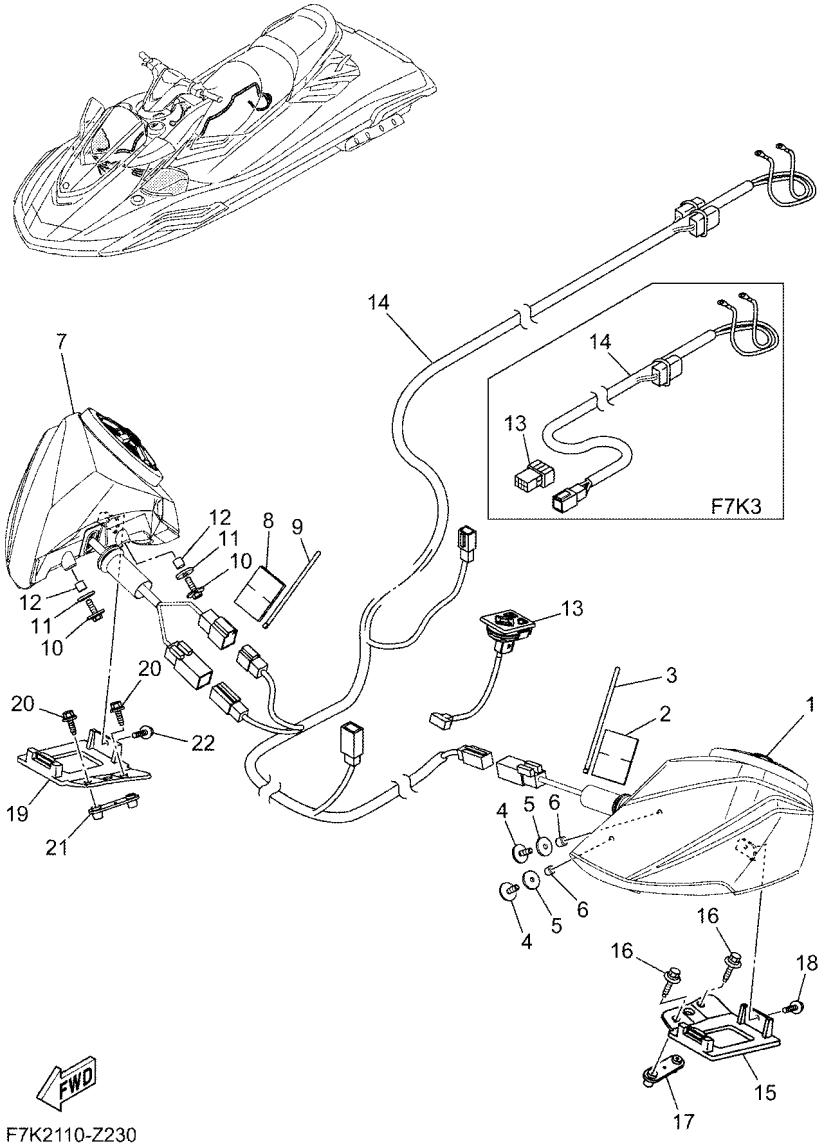

FIG. 23 ELECTRICAL 4

REF. NO.	PART NO.	DESCRIPTION	F7K2	F7K3				REMARKS
1	F5G–U8102–10	SPEAKER ASSY 1	1					
2	GJ1–U7578–12	PACKING, HOSE 2	1					
3	90464–32801	CLAMP	1					
4	F5G–U1369–00	BOLT	2					
5	F5G–U143K–00	PACKING	2					
6	F5G–U0229–00	COLLAR	2					
7	F5G–U8103–10	SPEAKER ASSY 2	1					
8	GJ1–U7578–12	PACKING, HOSE 2	1					
9	90464–32801	CLAMP	1					
10	F5G–U1369–00	BOLT	2					
11	F5G–U143K–00	PACKING	2					
12	F5G–U0229–00	COLLAR	2					
13	F5G–U81AJ–01	CONTROLLER, AUDIO	1					
	F5G–U0228–00	CONNECTOR		1				
14	F5G–U8275–01	WIRE, HARNESS	1					
	F5G–U8275–11	WIRE, HARNESS		1				
15	F5G–UE6GA–01	BRACKET, SPEAKER 1	1					
16	F5G–U1369–00	BOLT	2					
17	F5G–U0392–00	BRACKET	1					
18	90119–06882	BOLT, WITH WASHER	1					
19	F5G–UE6GA–11	BRACKET, SPEAKER 1	1					
20	F5G–U1369–00	BOLT	2					
21	F5G–U0392–10	BRACKET	1					
22	90119–06882	BOLT, WITH WASHER	1					

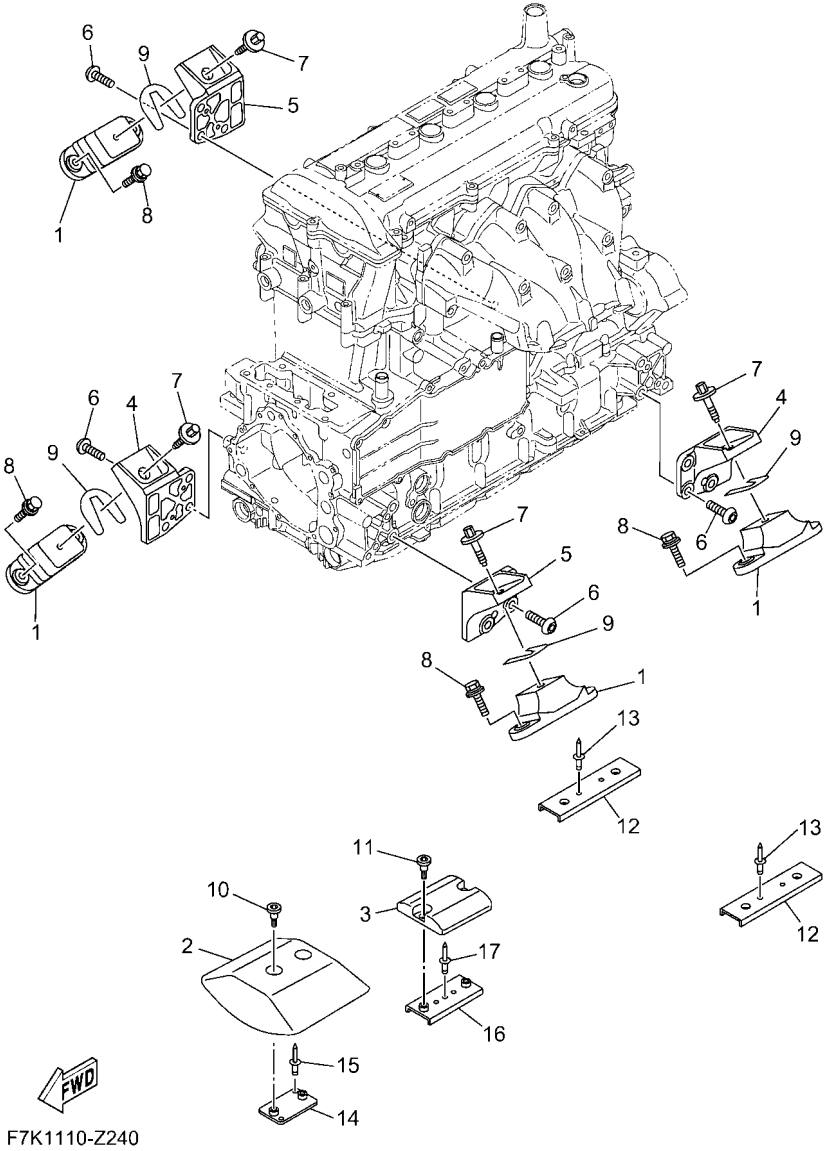

F7K1110-Z240

FIG. 24 ENGINE MOUNT

REF. NO.	PART NO.	DESCRIPTION	F7K2	F7K3				REMARKS
1	67X–44517–10	MOUNT RUBBER	4	4				
2	6HL–G4532–00	STOPPER, UPPER MOUNT	1	1				
3	6BH–G4574–00	STOPPER, LOWER MOUNT RUBBER	1	1				
4	6BH–41661–00–94	BRACKET 1	2	2				
5	6BH–41662–00–94	BRACKET 2	2	2				
6	90149–10068	SCREW	12	12				
7	90119–08859	BOLT, WITH WASHER	4	4				
8	90119–08823	BOLT, WITH WASHER	8	8				
9	EU0–U7354–00–01	SHIM (T=0.1)	10	10				UN
	EU0–U7354–00–03	SHIM (T=0.3)	10	10				UN
	EU0–U7354–00–05	SHIM (T=0.5)	10	10				UN
	EU0–U7354–00–10	SHIM (T=1.0)	10	10				UN
	EU0–U7354–00–20	SHIM (T=2.0)	10	10				UN
10	90109–06874	BOLT	2	2				
11	90109–06875	BOLT	2	2				
12	F2S–U732B–00	PLATE	2	2				
13	90267–489U2	RIVET, BLIND	4	4				
14	F2S–U732B–10	PLATE	1	1				
15	90267–489U2	RIVET, BLIND	2	2				
16	F2M–U732B–00	PLATE	1	1				
17	90267–489U2	RIVET, BLIND	1	1				

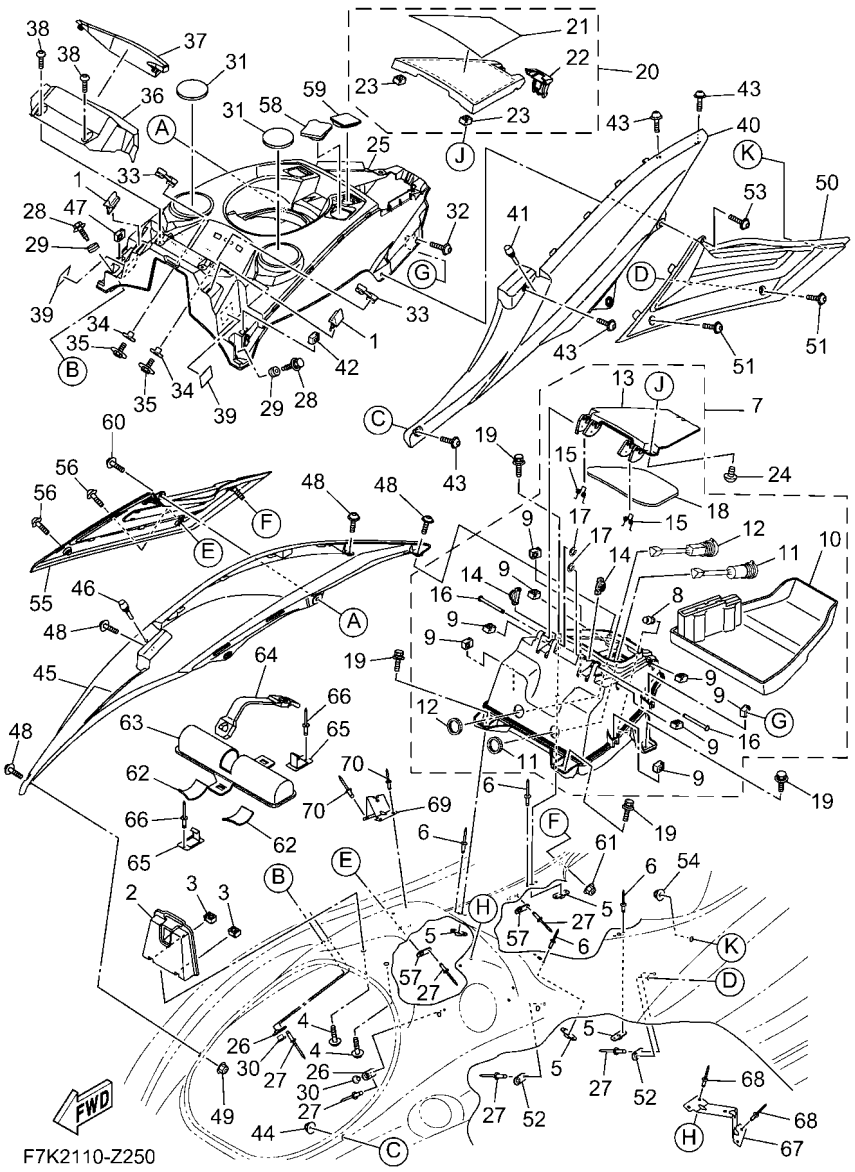

FIG. 25 ENGINE HATCH 1

REF. NO.	PART NO.	DESCRIPTION	F7K2	F7K3				REMARKS
1	F1K–U266C–10	PACKING 4	2	2				
2	F5G–U517F–02	HOOK,LID LOCK	1	1				
3	F3X–U517E–00	NUT	2	2				
4	90119–06880	BOLT, WITH WASHER	2	2				
5	F2C–U826C–00	BRACKET	4	4				
6	F4P–U516R–01	RIVET 1	8	8				
7	F5G–U1708–01	GLOVE BOX HATCH ASSY	1	1				
8	F3X–U2723–00	.SEAL	1	1				
9	F3X–U517E–00	.NUT	8	8				
10	F5G–U591L–00	.INNER, CASE	1	1				
11	F5G–H254B–00	.TERMINAL COMP.	1	1				
12	F5G–H21E1–00	.PLUG, USB	1	1				
13	F5G–U2811–01	.HING,HATCH 1	1	1				
14	F5G–U0210–00	.GEAR ASSY	2	2				
15	F5G–U1395–01	.SPRING, TORSION	2	2				
16	F5G–U517R–00	.PIN, HINGE	2	2				
17	F5G–U515C–00	.E-RING	2	2				
18	F5G–U519D–01	.PACKING CASE	1	1				
19	90119–08822	BOLT, WITH WASHER	4	4				
20	F5G–U4705–01	GLOVE BOX COVER ASSY	1	1				
21	F5G–U41B1–00	.LABEL, WARNING UNIFORM 1	1	1				
22	F4N–U2875–00	.LOCK	1	1				
23	F3X–U517E–00	.NUT	2	2				
24	90111–06873	BOLT, HEXAGON SOCKET BUTTON	2	2				
25	F5G–U5554–02	COVER, CENTER	1	1				
26	F2X–U5175–00	PLATE, FIX	2	2				
27	90267–489U1	RIVET,BLIND	6	6				

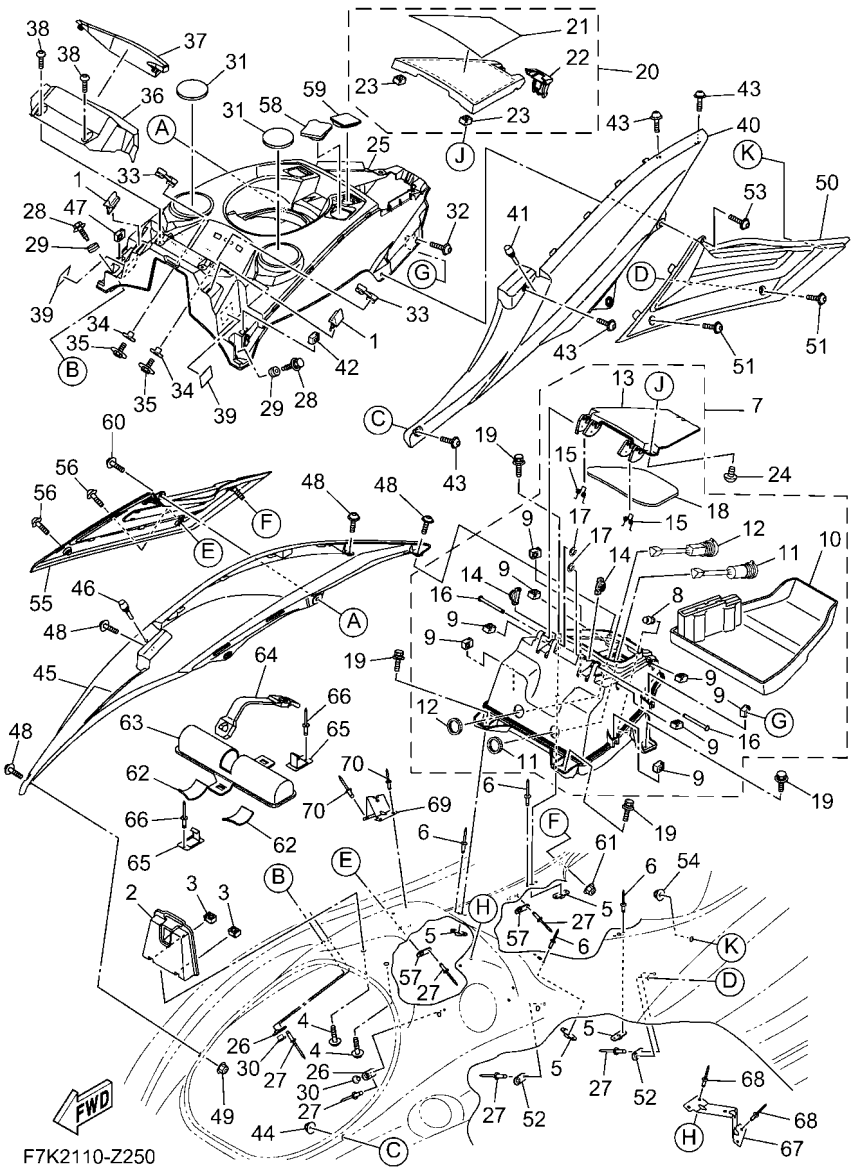

FIG. 25 ENGINE HATCH 1

REF. NO.	PART NO.	DESCRIPTION	F7K2	F7K3				REMARKS
28	90119–06832	BOLT, WITH WASHER	2	2				
29	F5G–U828E–00	DAMPER 1	2	2				
30	F5G–U2119–00	COLLAR	2	2				
31	F5G–U3844–00	MAT	2	2				
32	F5G–U6829–09	SCREW	2	2				
33	F3X–U1338–00	GROMMET	2	2				
34	F3X–U151R–00	COLLAR	4	4				
35	F3X–U1355–00	BOLT	4	4				
36	F5G–U8262–01	COVER METER	1	1				
37	F5G–U826F–01	ORNAMENT, METER	1	1				
38	F2S–U13C1–00	SCREW	4	4				
39	F2C–U1743–00	PACKING	2	2				
40	F5G–U377B–01–P5	COVER,SIDE 1 (SSA)	1	1				
41	F1W–U3768–01	CUSHION, RUBBER	1	1				
42	F3X–U517E–00	NUT	1	1				
43	F5G–U6829–09	SCREW	4	4				
44	F2N–U142L–00	NUT, LOCK	1	1				
45	F5G–U377C–01–P5	COVER,SIDE 2 (SSA)	1	1				
46	F1W–U3768–01	CUSHION, RUBBER	1	1				
47	F3X–U517E–00	NUT	1	1				
48	F5G–U6829–09	SCREW	4	4				
49	F2N–U142L–00	NUT, LOCK	1	1				
50	F3X–U370J–J0	SIDE ORNAMENT ASSY 1	1	1				
51	F5G–U6829–00	SCREW	2	2				
52	F2X–U5175–00	PLATE, FIX	2	2				
53	F5G–U6829–09	SCREW	1	1				
54	F2N–U142L–00	NUT, LOCK	1	1				

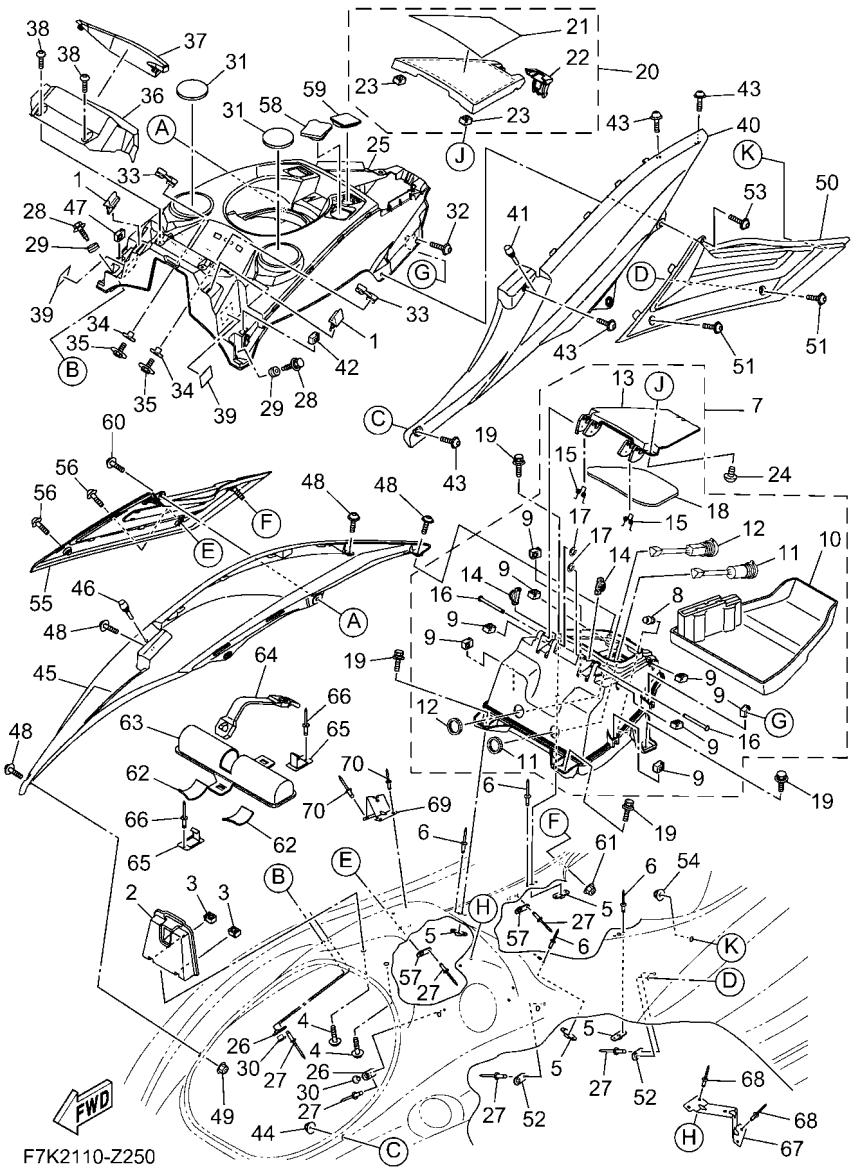

FIG. 25 ENGINE HATCH 1

REF. NO.	PART NO.	DESCRIPTION	F7K2	F7K3				REMARKS
55	F3X–U370K–J0	SIDE ORNAMENT ASSY 2	1	1				
56	F5G–U6829–00	SCREW	2	2				
57	F2X–U5175–00	PLATE, FIX	2	2				
58	F5G–U5568–00	CAP		1				
59	F4P–U5568–00	CAP		1				
60	F5G–U6829–09	SCREW	1	1				
61	F2N–U142L–00	NUT, LOCK	1	1				
62	F1K–U759C–00	MAT 2	2	2				
63	F1K–U5983–01	BOX, FIRE EXTINGUISHER	1	1				
64	F2P–U828K–00	BAND 1	1	1				
65	F1K–U5772–04	HOOK A	2	2				
66	90267–489U1	RIVET,BLIND	2	2				
67	F5G–U974A–00	RFM.,DASH BOARD 1	1	1				
68	F4P–U516R–01	RIVET 1	4	4				
69	F5G–U974B–00	RFM.,DASH BOARD 2	1	1				
70	F4P–U516R–01	RIVET 1	4	4				

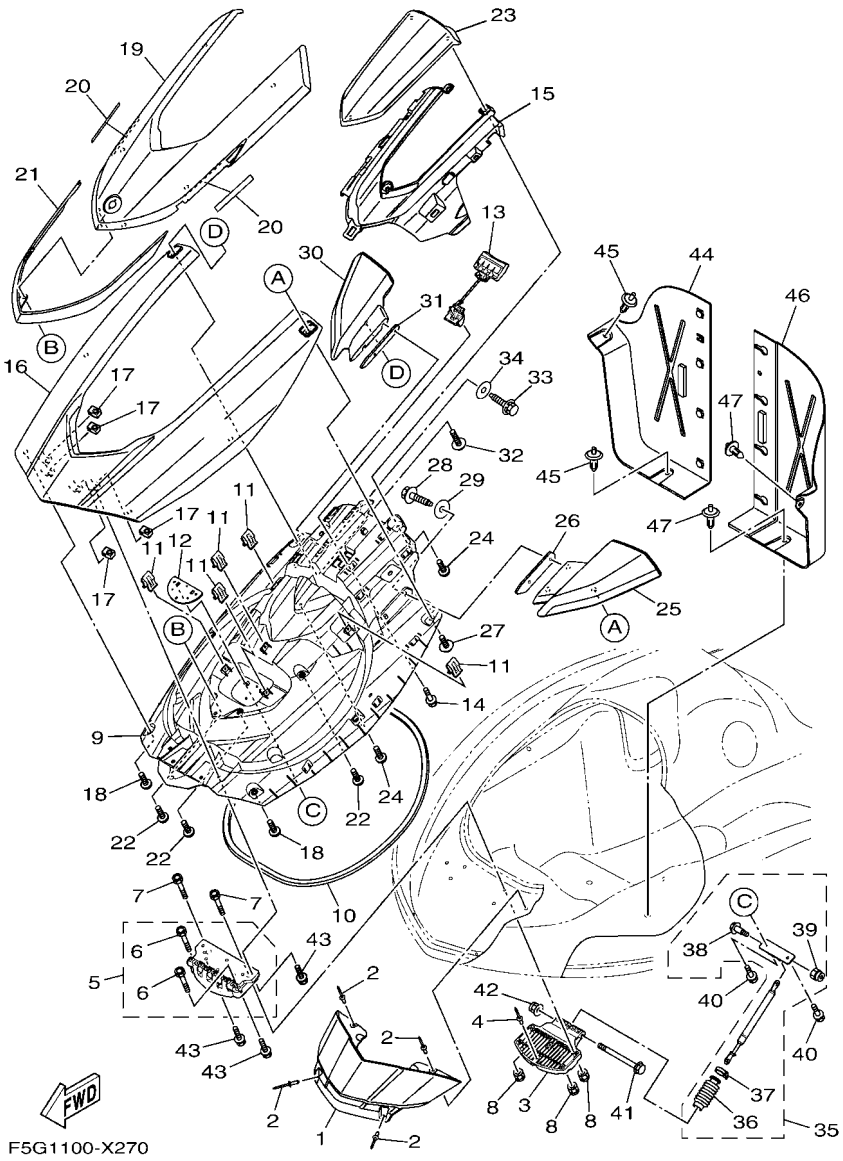

FIG. 26 ENGINE HATCH 2

REF. NO.	PART NO.	DESCRIPTION	F7K2	F7K3				REMARKS
1	F3X–U513M–02–PC	COVER, FRONT (SSA)	1	1				
2	90267–489U6	RIVET, BLIND	4	4				
3	F3X–U518E–00	PLATE, HINGE LID	1	1				
4	90267–48806	RIVET, BLIND	2	2				
5	F3X–U517D–01	HINGE, LID	1	1				
6	F3X–U3222–00	.BOLT	2	2				
7	F3X–U3222–00	BOLT	2	2				
8	F2N–U142L–00	NUT, LOCK	4	4				
9	F5G–U519G–02	INNER, ENGINE HATCH	1	1				
10	F3X–U2663–10	PACKING 1	1	1				
11	F3Y–U153K–00	CLIP	5	5				
12	F3X–U5148–00	PLATE, HATCH	1	1				
13	F3X–U517C–00	LOCK, LID	1	1				
14	90119–059U4	BOLT, WITH WASHER	2	2				
15	F5G–U519F–00	OUTER, ENGINE HATCH	1	1				
16	F5G–U517B–01–P6	LID, ENGINE ROOM (SSA)	1	1				
17	F3X–U517E–00	NUT	4	4				
18	F2S–U13C1–00	SCREW	4	4				
19	F5G–U515N–02–P6	VISOR (MBWS1)	1	1				
20	F0X–U515E–02	DAMPER 2	2	2				
21	F5G–U517V–20	ORNAMENT, CENTER	1	1				
22	F2S–U13C1–00	SCREW	5	5				
23	F5G–U515P–60	VISOR, 2	1	1				
24	F2S–U13C1–00	SCREW	3	3				
25	F3X–U590D–V0	MIRROR ASSY. 1	1	1				
26	F5G–U5193–00	PLATE	1	1				
27	F5G–U6829–09	SCREW	1	1				

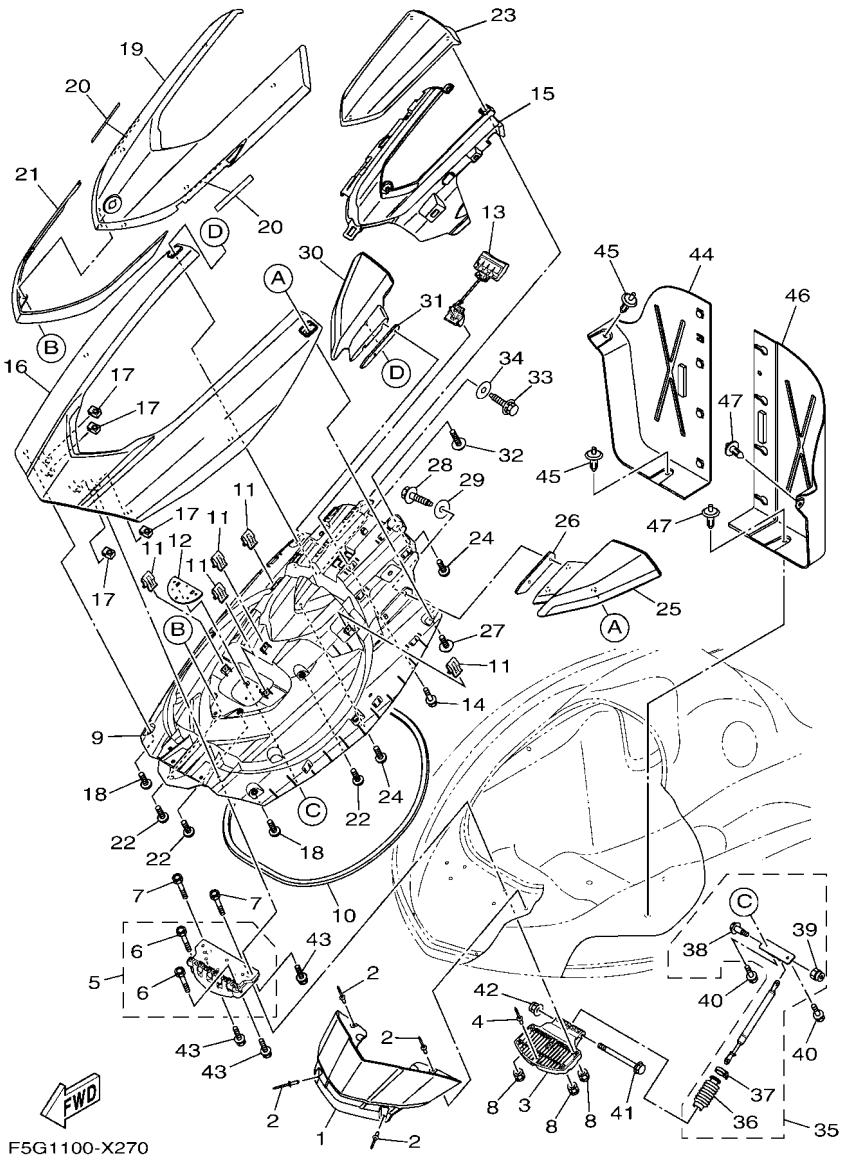

FIG. 26 ENGINE HATCH 2

REF. NO.	PART NO.	DESCRIPTION	F7K2	F7K3				REMARKS
28	90119–06820	BOLT, WITH WASHER	2	2				
29	90201–068G0	WASHER, PLATE	2	2				
30	F3X–U590E–V0	MIRROR ASSY. 2	1	1				
31	F5G–U5193–00	PLATE	1	1				
32	F5G–U6829–09	SCREW	1	1				
33	90119–06820	BOLT, WITH WASHER	2	2				
34	90201–068G0	WASHER, PLATE	2	2				
35	F2S–6514S–00	DAMPER ASSY	1	1				
36	F1W–6514T–00	.COVER, DAMPER	1	1				
37	1UA–82591–00	.BAND	1	1				
38	90109–06218	.BOLT	1	1				
39	95720–06300	.NUT, SELF-LOCKING	1	1				
40	90119–069UH	BOLT, WITH WASHER	2	2				
41	F3X–U491K–00	BOLT, SPECIAL	1	1				
42	F3Y–U142L–00	NUT, LOCK	1	1				
43	90119–06896	BOLT, WITH WASHER	4	4				
44	F3X–U475B–00	LOCKER,BOW	1	1				
45	F4P–U1454–00	RIVET	2	2				
46	F3X–U475F–00	PLATE, LOKER BOW	1	1				
47	F4P–U1454–00	RIVET	2	2				

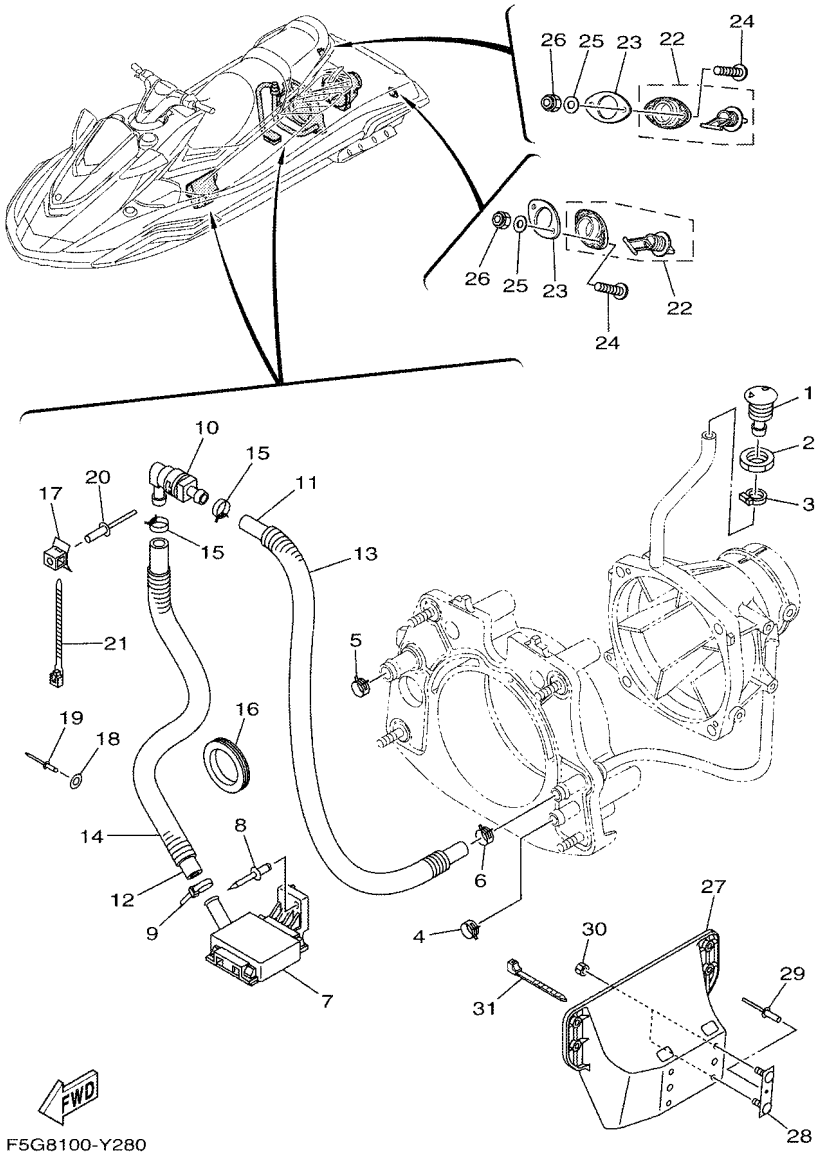

FIG. 27 HULL & DECK

REF. NO.	PART NO.	DESCRIPTION	F7K2	F7K3				REMARKS
1	F1W–U269B–00	SPOUT	1	1				
2	EU0–61652–00	NUT	1	1				
3	90601–118UF	BAND, HOSE 18	1	1				
4	90467–200A3	CLIP	1	1				
5	90467–240A3	CLIP	1	1				
6	90467–180A5	CLIP	1	1				
7	F1B–U761D–02	STRAINER, BILGE	1	1				
8	90267–489U8	RIVET, BLIND	1	1				
9	90601–200U1	BAND	1	1				
10	68N–5112T–00	JOINT, HOSE	1	1				
11	90445–20804	HOSE (L860)	1	1				
12	90445–20800	HOSE (L500)	1	1				
13	90446–27M73	HOSE (L700)	1	1				
14	90446–27M55	TUBE (L400)	1	1				
15	90467–180A5	CLIP	2	2				
16	F4F–U1338–00	GROMMET	1	1				
17	F1W–U828M–00	BASE, CLAMP	1	1				
18	9299R–05200	WASHER	1	1				
19	90267–48806	RIVET, BLIND	1	1				
20	90267–48802	RIVET, BLIND	1	1				
21	90464–32801	CLAMP	1	1				
22	F1S–U2280–02	DRAIN PLUG ASSY.	2	2				
23	F1S–U2285–01	PACKING, DRAIN	2	2				
24	9788R–05025	SCREW, PAN HEAD	4	4				
25	9299R–05200	WASHER	4	4				
26	9572R–05300	NUT, FLANGE	4	4				
27	F1W–U8572–01	BRACKET 2	1	1				

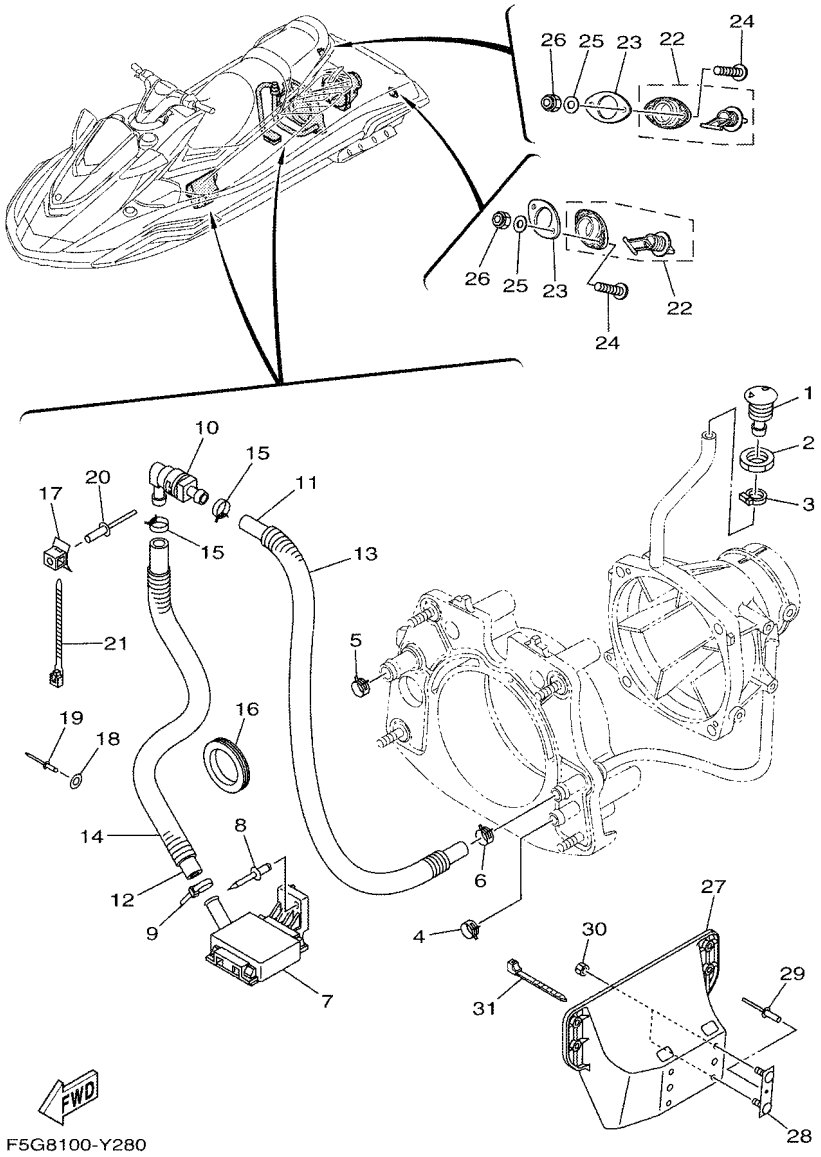

FIG. 27 HULL & DECK

REF. NO.	PART NO.	DESCRIPTION	F7K2	F7K3				REMARKS
28	F1K–U826C–03	BRACKET	2	2				
29	90267–489U1	RIVET,BLIND	2	2				
30	F3Y–U142L–00	NUT, LOCK	4	4				
31	90464–32801	CLAMP	1	1				

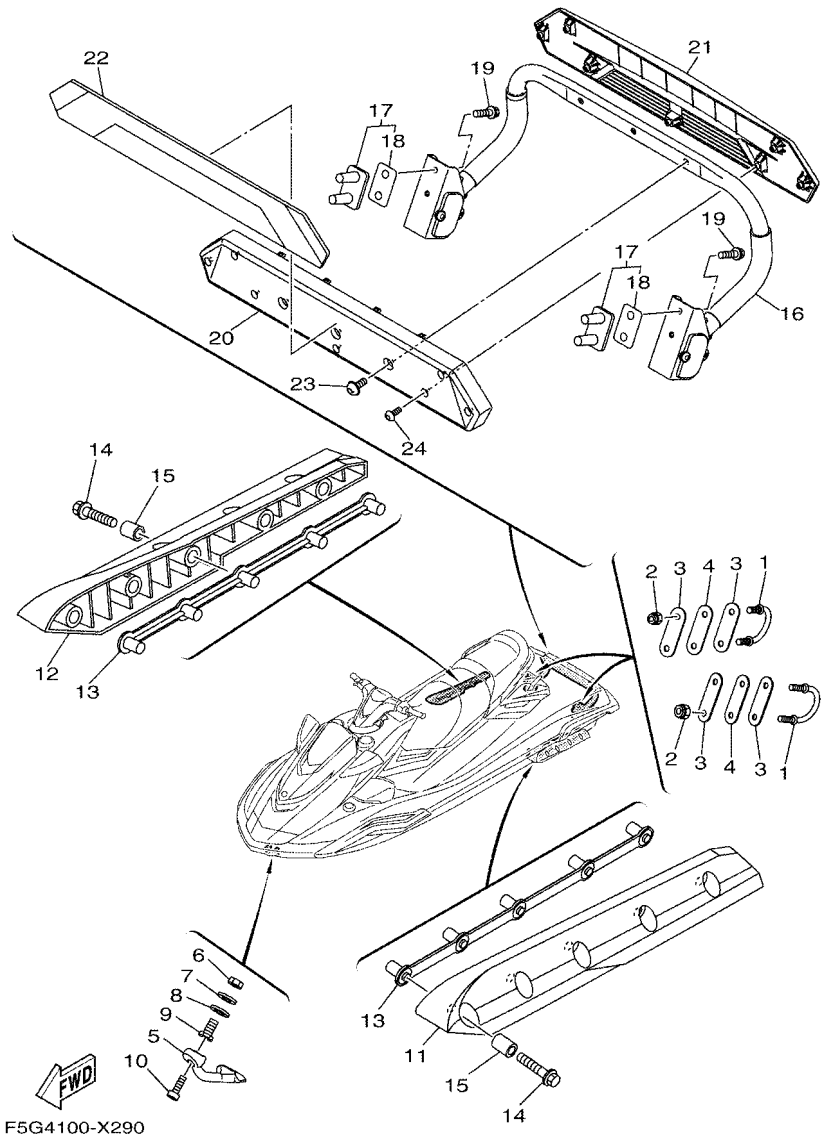

FIG. 28 HULL & DECK 2

REF. NO.	PART NO.	DESCRIPTION	F7K2	F7K3				REMARKS
1	F2N–U1628–10	STERN EYE	2	2				
2	9572R–08300	NUT, FLANGE	4	4				
3	GP7–U4953–10	PLATE A	4	4				
4	F1B–U1653–03	PACKING	2	2				
5	F1K–61624–00	BOW EYE 1	1	1				
6	99780–12600	NUT.HEX.(COARS)	2	2				
7	92990–12200	WASHER, PLAIN	2	2				
8	F0X–61637–00	WASHER	2	2				
9	F0X–61652–01	NUT	2	2				
10	90110–06040	BOLT, HEXAGON SOCKET HEAD	2	2				
11	F1S–U883N–01	STABILIZER LH	1	1				BLACK
12	F1S–U883P–01	STABILIZER RH	1	1				BLACK
13	F1X–U883T–02	BRACKET,STABILIZER	2	2				
14	90105–08860	BOLT, FLANGE	10	10				
15	F2N–U8169–10	SPACER	10	10				
16	F3X–U278A–00	LADDER, STEP ASSY	1	1				
17	F2S–U278F–01	BRACKET, LADDER LH	2	2				
18	F2S–U278H–01	.PACKING, BRKT. 1	1	1				
19	90119–08861	BOLT, WITH WASHER	4	4				
20	F3X–U882F–02	STEP	1	1				
21	F3X–U884R–01	PLATE, STEP 1	1	1				
22	F3X–U4994–00	COVER STEP 1	1	1				
23	90119–069UH	BOLT, WITH WASHER	2	2				
24	F2S–U13C1–00	SCREW	7	7				

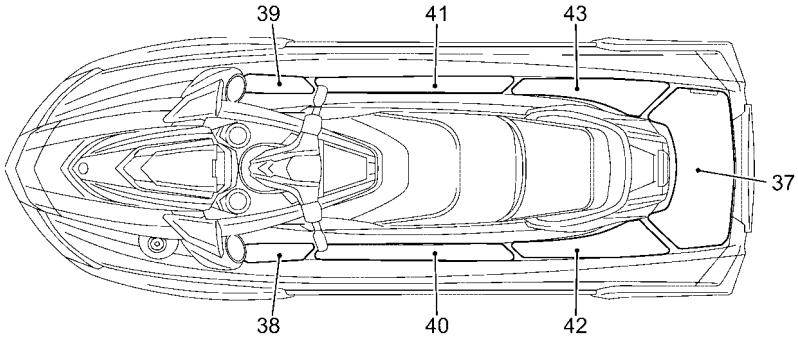

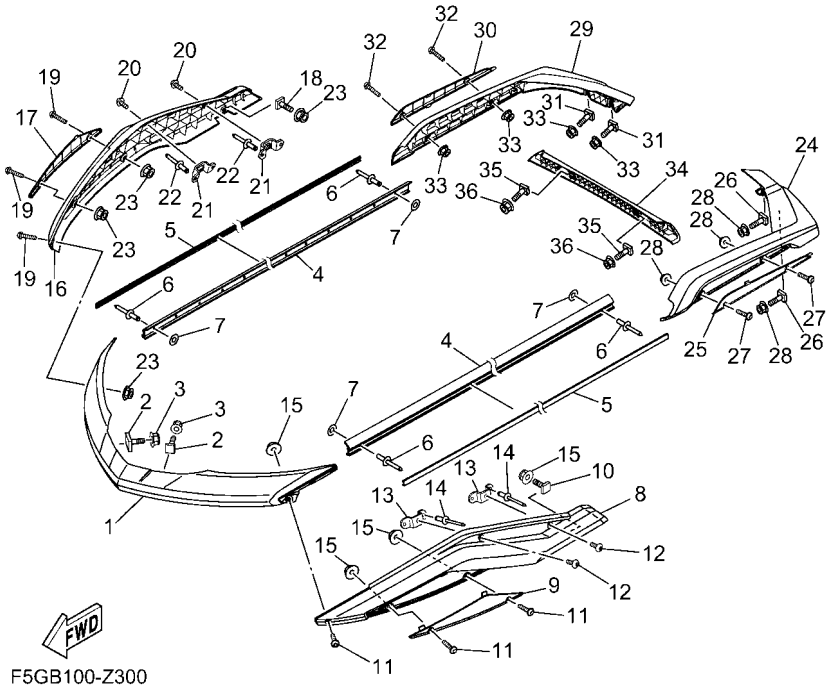

FIG. 29 GUNWALE & MAT

REF. NO.	PART NO.	DESCRIPTION	F7K2	F7K3				REMARKS
1	F3X–U2511–11	GUNWALE, BOW	1	1				WHITE
2	F1W–U491K–01	BOLT, SPECIAL	2	2				
3	F2N–U142L–00	NUT, LOCK	2	2				
4	F3X–U2512–10	GUNWALE, SIDE	2	2				WHITE
5	F3X–U2519–B0	INNER,GUNWALE	2	2				BLUE
6	90267–489U8	RIVET, BLIND	12	12				
7	9299R–05200	WASHER	12	12				
8	F3X–U252E–10	JOINT, GUNWALE LH	1	1				WHITE
9	F3X–U2514–N0	GUNWALL INSIDE	1	1				BLUE
10	F1W–U491K–01	BOLT, SPECIAL	1	1				
11	F3X–U7823–12	SCREW	3	3				
12	F7K–U8198–00	SCREW	2	2				
13	F3X–U4949–00	BRACKET	2	2				
14	90267–489U6	RIVET, BLIND	4	4				
15	F2N–U142L–00	NUT, LOCK	4	4				
16	F3X–U252F–10	JOINT, GUNWALE RH	1	1				WHITE
17	F3X–U2514–P0	GUNWALL INSIDE	1	1				BLUE
18	F1W–U491K–01	BOLT, SPECIAL	1	1				
19	F3X–U7823–12	SCREW	3	3				
20	F7K–U8198–00	SCREW	2	2				
21	F3X–U4949–00	BRACKET	2	2				
22	90267–489U6	RIVET, BLIND	4	4				
23	F2N–U142L–00	NUT, LOCK	4	4				
24	F3X–U251D–10	GUNWALE, STERN 1	1	1				WHITE
25	F3X–U255C–N0	INNER GUNWALE, AFT	1	1				BLUE
26	F1W–U491K–01	BOLT, SPECIAL	2	2				
27	F3X–U7823–12	SCREW	2	2				

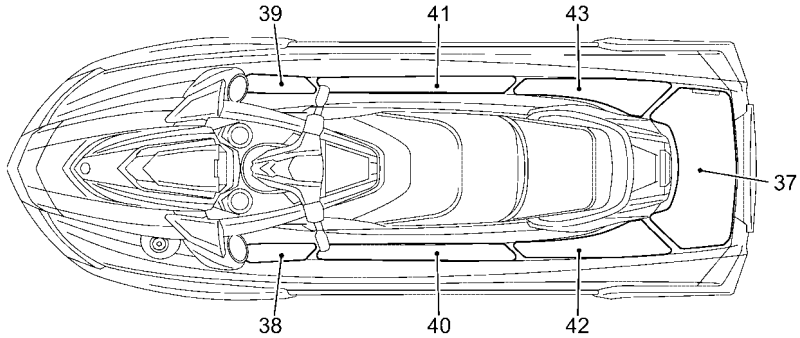

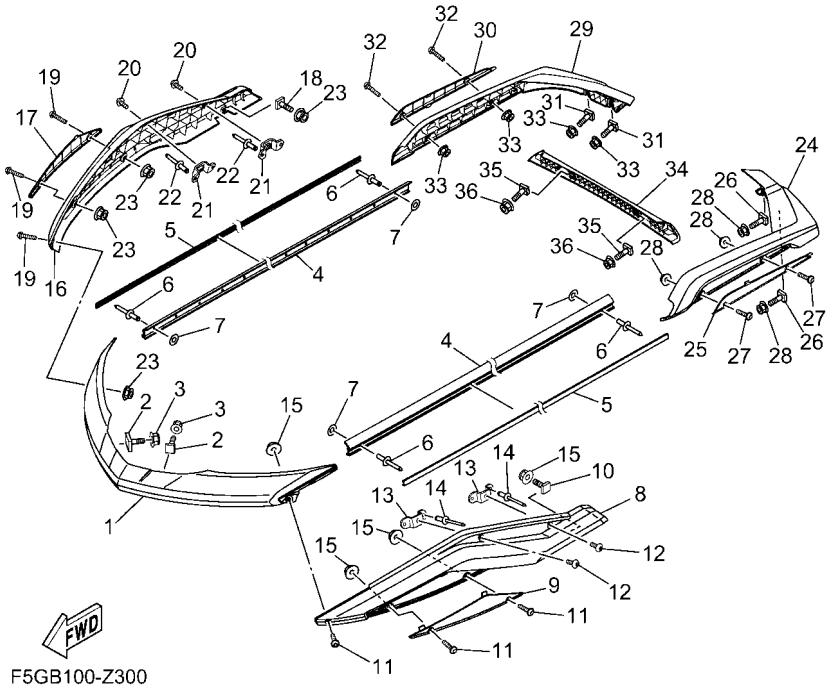

FIG. 29 GUNWALE & MAT

REF. NO.	PART NO.	DESCRIPTION	F7K2	F7K3				REMARKS
28	F2N–U142L–00	NUT, LOCK	4	4				
29	F3X–U251E–10	GUNWALE, STERN 2	1	1				WHITE
30	F3X–U255C–P0	INNER GUNWALE, AFT	1	1				BLUE
31	F1W–U491K–01	BOLT, SPECIAL	2	2				
32	F3X–U7823–12	SCREW	2	2				
33	F2N–U142L–00	NUT, LOCK	4	4				
34	F3X–U252C–11	COVER, GUNWALE 1	1	1				WHITE
35	F1W–U491K–01	BOLT, SPECIAL	2	2				
36	F2N–U142L–00	NUT, LOCK	2	2				
37	F3X–U3581–01	MAT, UPPER	1	1				GREY/BLACK
38	F3V–U351H–00	MAT, STEP 1	1					GRAY/BLACK
	F3X–U351H–00	MAT, STEP 1		1				GREY/BLACK
39	F3V–U351J–00	MAT, STEP 2	1					GRAY/BLACK
	F3X–U351J–00	MAT, STEP 2		1				GREY/BLACK
40	F3X–U351K–00	MAT, STEP 3	1	1				GREY/BLACK
41	F3X–U351M–00	MAT, STEP 4	1	1				GREY/BLACK
42	F3X–U351N–00	MAT, STEP 5	1	1				GREY/BLACK
43	F3X–U351P–00	MAT, STEP 6	1	1				GREY/BLACK

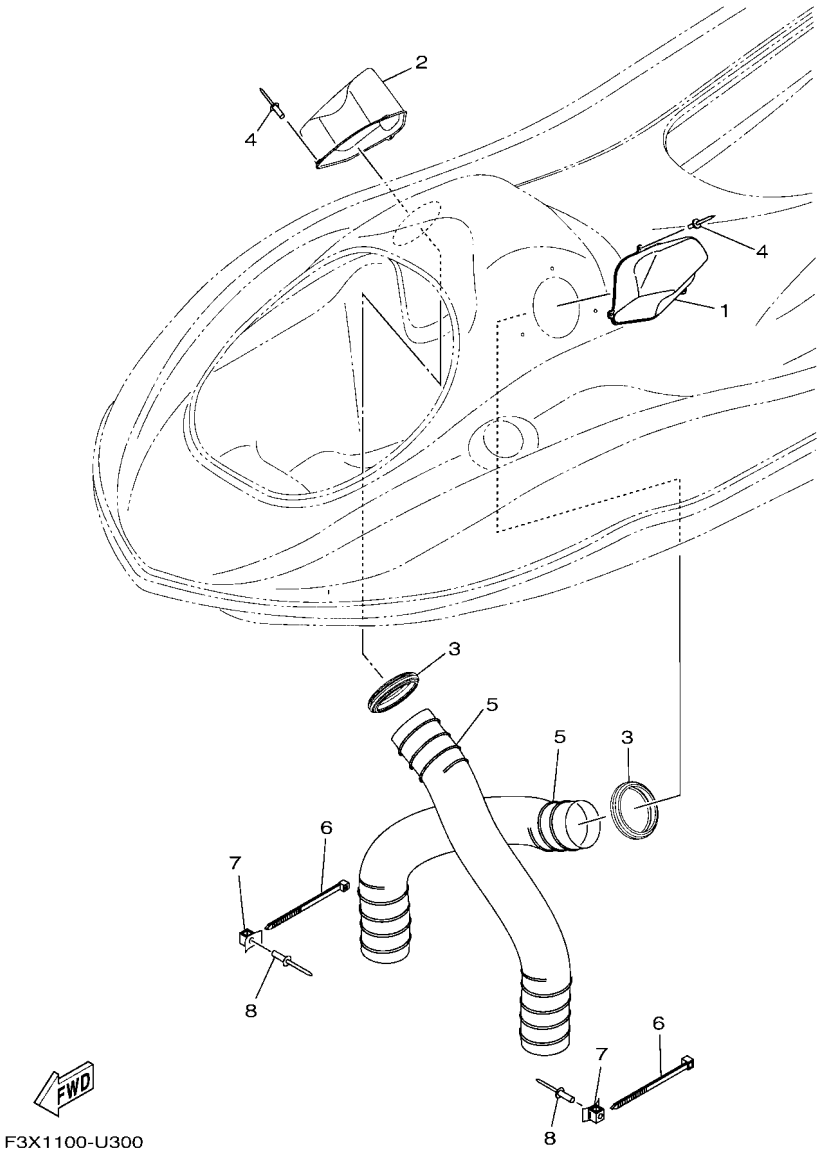

FIG. 30 VENTILATION

REF. NO.	PART NO.	DESCRIPTION	F7K2	F7K3				REMARKS
1	F3X–U2187–00	BOX, INDUCTION 1	1	1				
2	F3X–U2188–00	BOX, INDUCTION 2	1	1				
3	F2N–U2127–00	BASE, AIR INTAKE	2	2				
4	90267–48806	RIVET, BLIND	6	6				
5	F2N–U213G–02	HOSE, VENTILATOR 2	2	2				
6	90464–99804	CLAMP	2	2				
7	F1W–U828M–00	BASE, CLAMP	2	2				
8	90267–48806	RIVET, BLIND	2	2				

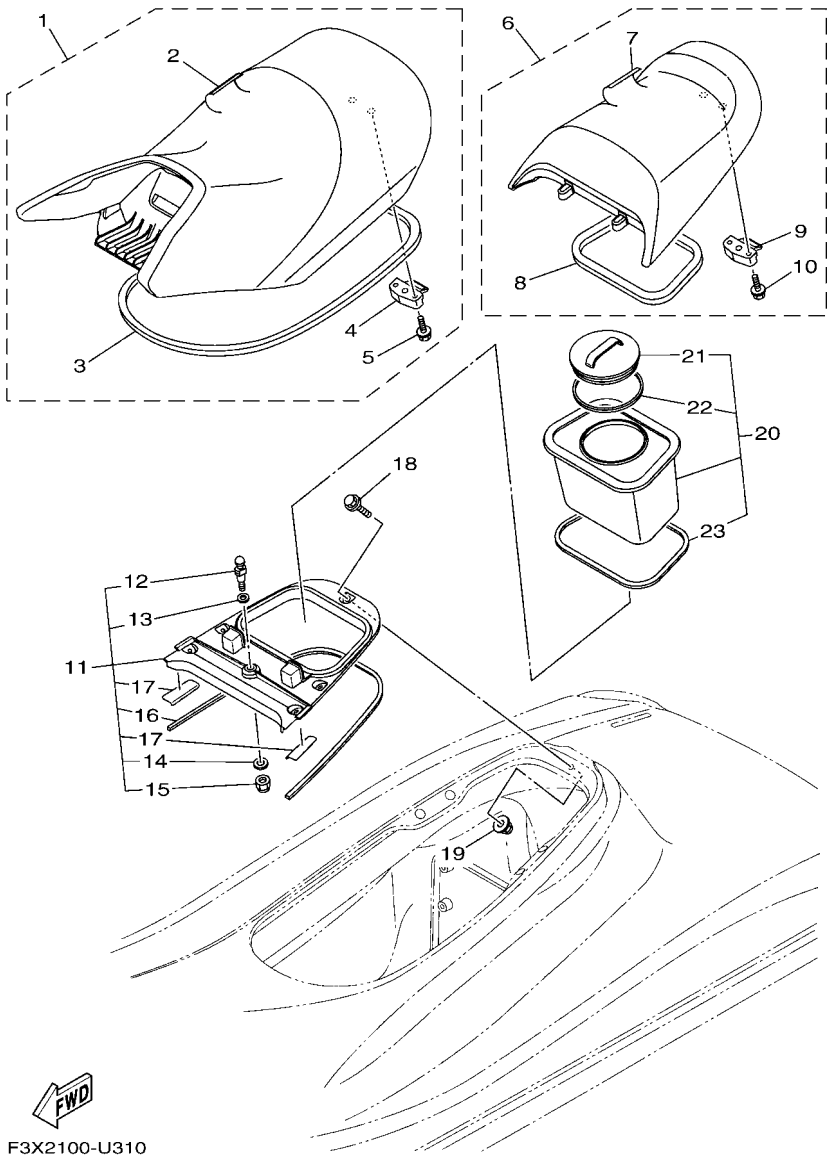

FIG. 31 SEAT & UNDER LOCKER

REF. NO.	PART NO.	DESCRIPTION	F7K2	F7K3				REMARKS
1	F5G–U371A–30	DOUBLE SEAT ASSY	1	1				
2	F5G–U371B–30	.COVER, SEAT 1	1	1				
3	F3X–U2664–01	.PACKING	1	1				
4	F2C–U3850–00	.SEAT LOCK ASSY	1	1				
5	90119–069UP	.BOLT, WITH WASHER	2	2				
6	F5G–U372A–30	SINGLE SEAT ASSY	1	1				
7	F5G–U372B–30	.COVER, SEAT	1	1				
8	F3X–U266D–01	.PACKING 5	1	1				
9	F2C–U3850–00	.SEAT LOCK ASSY	1	1				
10	90119–069UP	.BOLT, WITH WASHER	2	2				
11	F2S–U890L–05	DECK BEAM ASSY	1	1				
12	GH1–U3774–00	.PIN	1	1				
13	90201–109U6	.WASHER, PLATE	1	1				
14	9299R–10200	.WASHER	1	1				
15	9572R–10300	.NUT, NYLON	1	1				
16	F2S–U375E–00	.PACKING 1	1	1				
17	F2S–U8244–00	.PACKING	2	2				
18	90119–08828	BOLT, WITH WASHER	5	5				
19	F3Y–U142L–00	NUT, LOCK	5	5				
20	F2C–U591A–03	CASE ASSY 1	1	1				
21	F2C–U591C–00	.CAP,CASE	1	1				
22	F2C–U591D–01	.PACKING,CASE	1	1				
23	F2C–U266E–00	.PACKING,6	1	1				

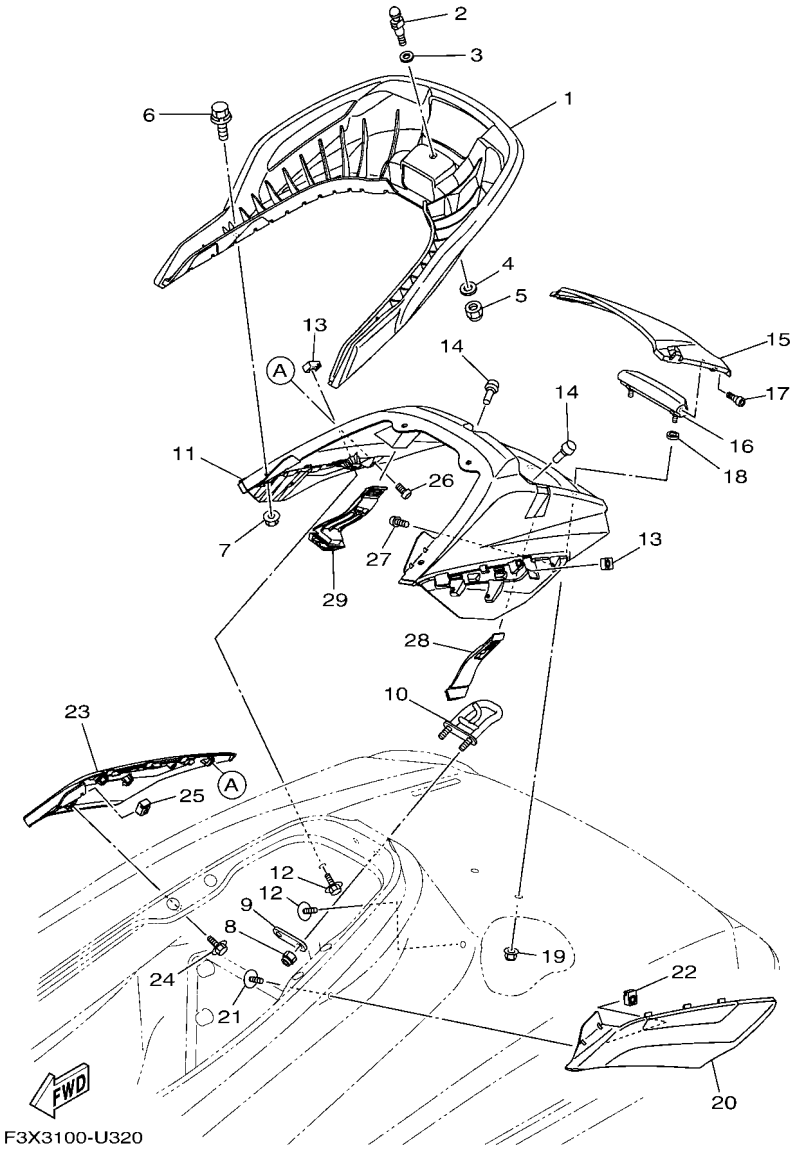

FIG. 32 SEAT & UNDER LOCKER 2

REF. NO.	PART NO.	DESCRIPTION	F7K2	F7K3				REMARKS
1	F3X–U271B–00	GRIP, HAND	1	1				
2	GH1–U3774–00	PIN	1	1				
3	90201–109U6	WASHER, PLATE	1	1				
4	9299R–10200	WASHER	1	1				
5	9572R–10300	NUT, NYLON	1	1				
6	90119–08829	BOLT, WITH WASHER	4	4				
7	F3Y–U142L–00	NUT, LOCK	4	4				
8	9572R–08300	NUT, FLANGE	2	2				
9	GP7–U4953–10	PLATE A	1	1				
10	F3J–U1629–00	SKI TOWS	1	1				
11	F3X–U89A1–00–PD	STORAGE, STERN (PCS1)	1	1				
12	F3X–U13B4–00	BOLT	2	2				
13	F3X–U517E–00	NUT	2	2				
14	F1W–U3768–01	CUSHION, RUBBER	2	2				
15	F3X–U518M–01–PC	LID LOCKER STERN (PCS1)	1	1				
16	F2S–U271F–01	GRIP, LOWER	1	1				
17	F2S–U2624–01	BOLT	2	2				
18	F2S–U2284–01	PACKING	2	2				
19	F3Y–U142L–00	NUT, LOCK	2	2				
20	F3X–U890M–00	STERN COVER ASSY 1	1	1				
21	F3X–U13B4–00	BOLT	1	1				
22	F3X–U517E–00	NUT	1	1				
23	F3X–U890N–00	STERN COVER ASSY 2	1	1				
24	F3X–U13B4–00	BOLT	1	1				
25	F3X–U517E–00	NUT	1	1				
26	F2S–U13C1–00	SCREW	3	3				
27	F2S–U13C1–00	SCREW	3	3				

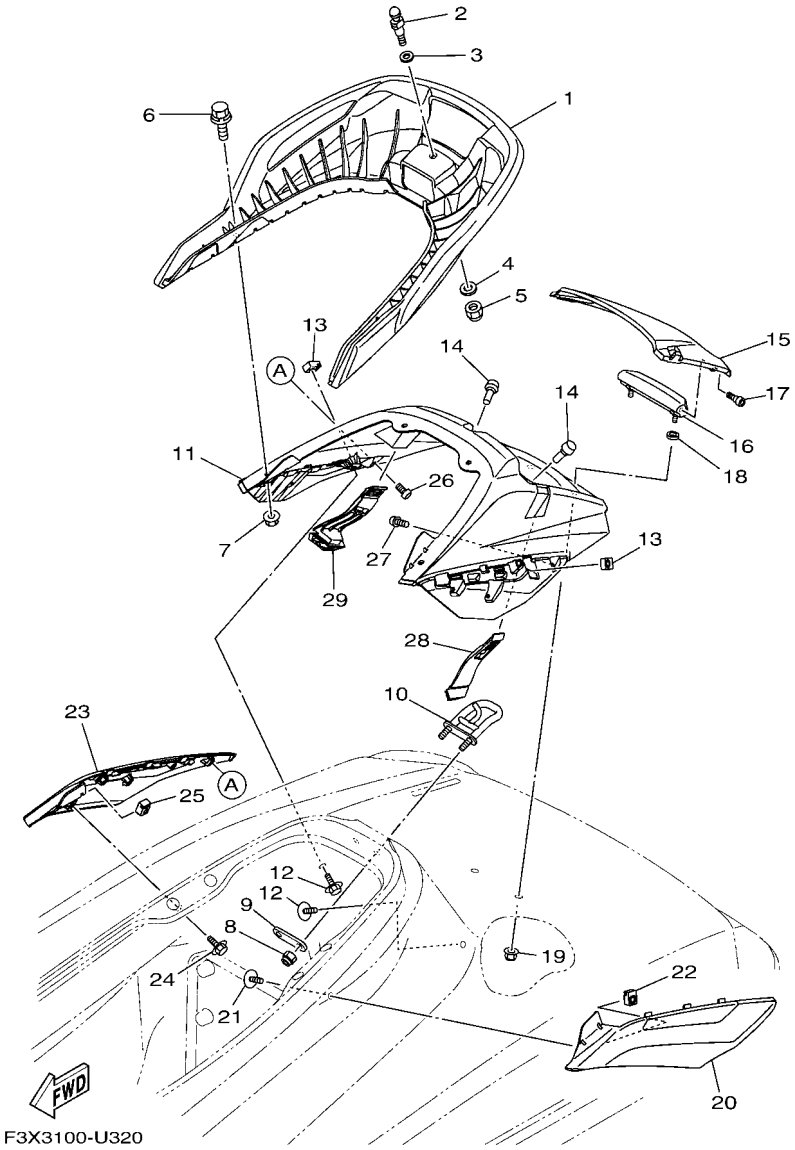

FIG. 32 SEAT & UNDER LOCKER 2

REF. NO.	PART NO.	DESCRIPTION	F7K2	F7K3				REMARKS
28	F3X–U264L–01	LOCK 1	1	1				
29	F3X–U264L–11	LOCK 1	1	1				

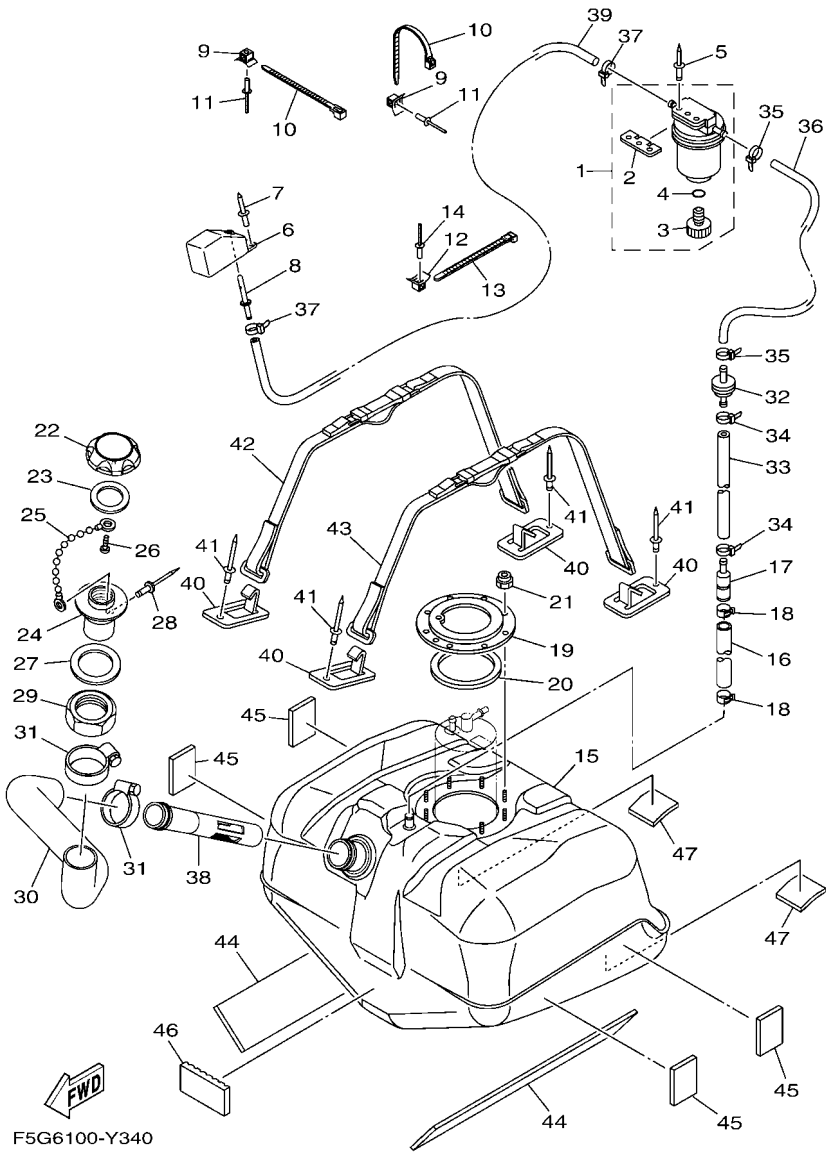

FIG. 33 FUEL TANK

REF. NO.	PART NO.	DESCRIPTION	F7K2	F7K3				REMARKS
1	F2F–6214A–00	FILTER, VENT ASSY	1	1				
2	EW2–62142–00	.PLATE, FILTER	1	1				
3	70R–24543–00	.PLUG, DRAIN	1	1				
4	70R–24489–00	.O-RING	1	1				
5	90267–489U2	RIVET, BLIND	2	2				
6	GP7–62159–02	SOCKET, VENTILATION	1	1				
7	90267–489U6	RIVET, BLIND	2	2				
8	F1G–62149–00	PIPE, VENTILATION	1	1				
9	F1W–U828M–00	BASE, CLAMP	2	2				
10	90464–32801	CLAMP	2	2				
11	90267–48806	RIVET, BLIND	2	2				
12	F1W–U828M–00	BASE, CLAMP	1	1				
13	90464–32801	CLAMP	1	1				
14	90267–48806	RIVET, BLIND	1	1				
15	F4P–U7711–00	TANK, FUEL	1	1				
16	F4P–U785G–00	HOSE, AIR VENT	1	1				
17	F4P–U8167–10	CONNECTOR	1	1				
18	90467–190A2	CLIP	2	2				
19	F1B–U7773–00	RING	1	1				
20	F1B–67747–00	PACKING, SEAL	1	1				
21	9572R–06300	NUT, NYLON	9	9				
22	F2N–U7831–10	CAP, FUEL FILLER	1	1				BLACK
23	GP7–U7832–01	PACKING	1	1				
24	GP7–U7833–11	SOCKET	1	1				BLACK
25	GP7–U7835–00	CHAIN BALL	1	1				
26	90169–049U1	SCREW, TRUSS HEAD TAPPING	1	1				
27	GP7–U7834–00	PACKING FUEL FILLER	1	1				

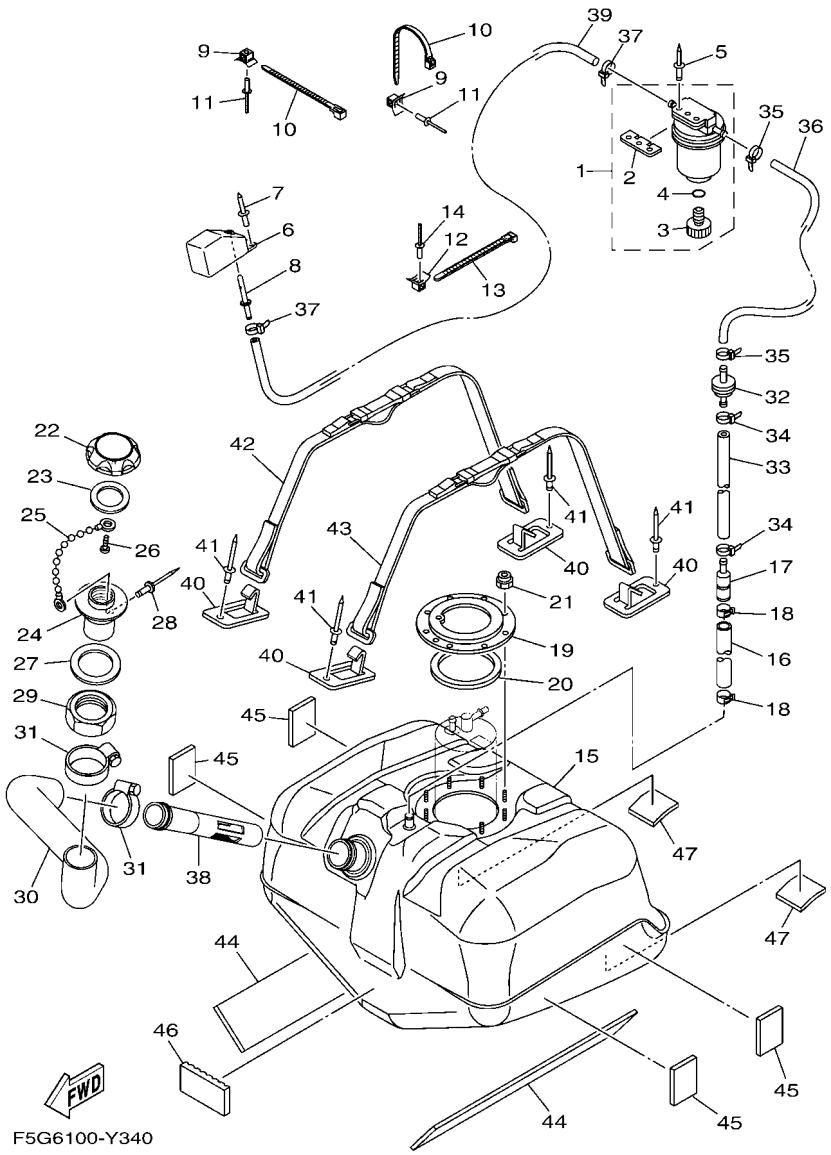

FIG. 33 FUEL TANK

REF. NO.	PART NO.	DESCRIPTION	F7K2	F7K3				REMARKS
28	90267–329UR	RIVET, BLIND	1	1				
29	GP7–U783F–00	NUT, FUEL FILLER	1	1				
30	F3X–U7844–01	HOSE	1	1				
31	90601–155U4	BAND, HOSE 55	2	2				
32	F3Y–U7767–00	CHECK VALVE	1	1				
33	GP7–U785H–00	HOSE, AIR VENT 3	1	1				
34	90465–11829	CLAMP	2	2				
35	90465–11829	CLAMP	2	2				
36	F0D–U785G–10	HOSE, AIR VENT	1	1				
37	90465–11829	CLAMP	2	2				
38	F4L–U773D–00	TUBE	1	1				
39	F0D–U7856–10	HOSE, AIR VENT 3	1	1				
40	F1K–U5772–04	HOOK A	4	4				
41	90267–489U1	RIVET,BLIND	4	4				
42	F2S–67743–01	BELT, TANK 1	1	1				
43	F2S–67743–01	BELT, TANK 1	1	1				
44	F2S–U759B–00	MAT 1	2	2				
45	F1W–U759C–01	MAT 2	4	4				
46	F1K–U759C–00	MAT 2	1	1				
47	F1K–U759C–00	MAT 2	2	2				

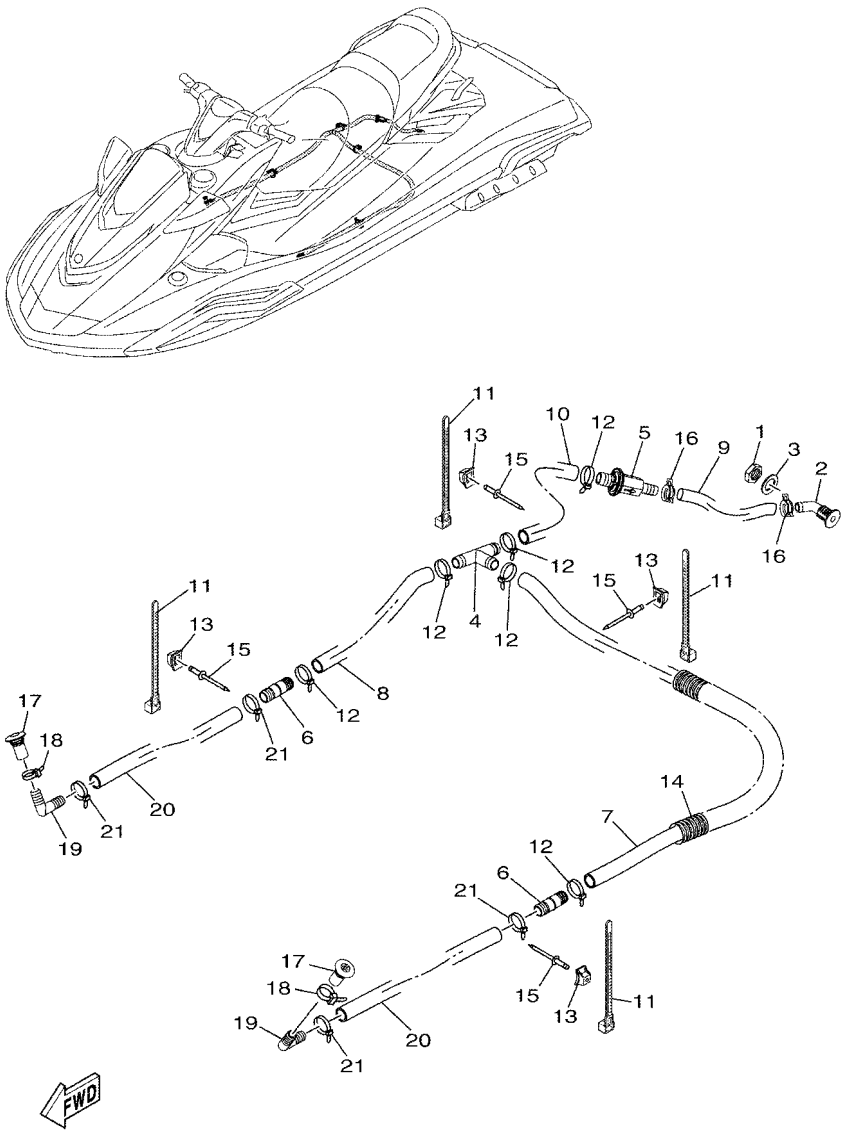

FIG. 34 BILGE PUMP

REF. NO.	PART NO.	DESCRIPTION	F7K2	F7K3				REMARKS
1	F3X–U224B–00	NUT, DRAIN 1	1	1				
2	F3X–U224C–00	BODY, DRAIN 1	1	1				
3	F3X–U7564–00	GASKET	1	1				
4	F3X–U7857–00	JOINT,HOSE	1	1				
5	F3X–U7767–00	CHECK VALVE	1	1				
6	F3X–U7617–00	JOINT, DRAIN	2	2				
7	F3X–U7629–10	HOSE, DRAIN 2	1	1				
8	F3X–U2249–10	HOSE, DRAIN	1	1				
9	F3X–U7628–10	HOSE, DRAIN 3	1	1				
10	F3X–U7626–10	HOSE 1	1	1				
11	90464–32801	CLAMP	4	4				
12	90601–200U1	BAND	6	6				
13	F1W–U828M–00	BASE, CLAMP	4	4				
14	6EX–U773D–00	TUBE	1	1				
15	90267–48802	RIVET, BLIND	4	4				
16	90467–17802	CLIP	2	2				
17	F4P–U2255–00	PLUG,DRAIN	2	2				
18	90601–200U1	BAND	2	2				
19	F3X–U8377–00	CONNECTOR	2	2				
20	F3X–U2249–10	HOSE, DRAIN	2	2				
21	90601–200U1	BAND	4	4				

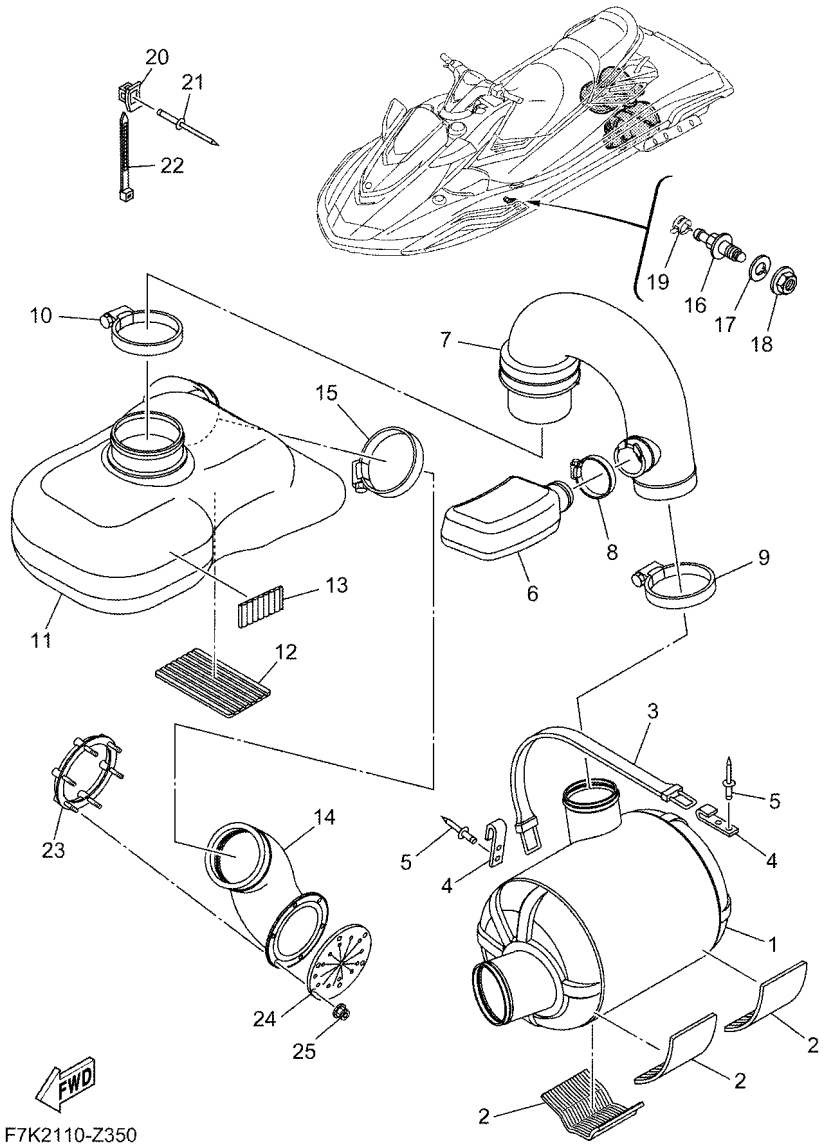

FIG. 35 EXHAUST 3

REF. NO.	PART NO.	DESCRIPTION	F7K2	F7K3				REMARKS
1	F4P–U7550–00	WATER LOCK COMP.	1	1				
2	F1S–U8221–00	PAD, BATTERY	3	3				
3	EW2–67821–00	BAND, FUEL TANK	1	1				
4	GA7–65772–00	HOOK A	2	2				
5	90267–489U1	RIVET,BLIND	4	4				
6	F7K–U753C–01	RESONATOR 1	1	1				
7	F7K–U7555–01	HOSE, EXHAUST	1	1				
8	90601–170UG	BAND, HOSE 70	1	1				
9	90450–99801	HOSE CLAMP ASSY	1	1				
10	90450–99804	HOSE CLAMP ASSY	1	1				
11	F7K–U4261–00	TANK, WATER	1	1				
12	F1S–U8221–00	PAD, BATTERY	1	1				
13	F1K–U759C–00	MAT 2	1	1				
14	F7K–U758D–00	HOSE,EXHAUST 3	1	1				
15	90450–99801	HOSE CLAMP ASSY	1	1				
16	F2C–U753B–01	PILOT, WATER	1	1				
17	F2C–U7564–01	GASKET	1	1				
18	F2C–U2733–00	NUT	1	1				
19	90467–150A5	CLIP	1	1				
20	F1W–U828M–00	BASE, CLAMP	1	1				
21	90267–48806	RIVET, BLIND	1	1				
22	90464–32801	CLAMP	1	1				
23	F1S–U757B–01	PLATE	1	1				
24	F1B–U751G–10	VALVE, EXHAUST	1	1				
25	F2N–U142L–00	NUT, LOCK	6	6				

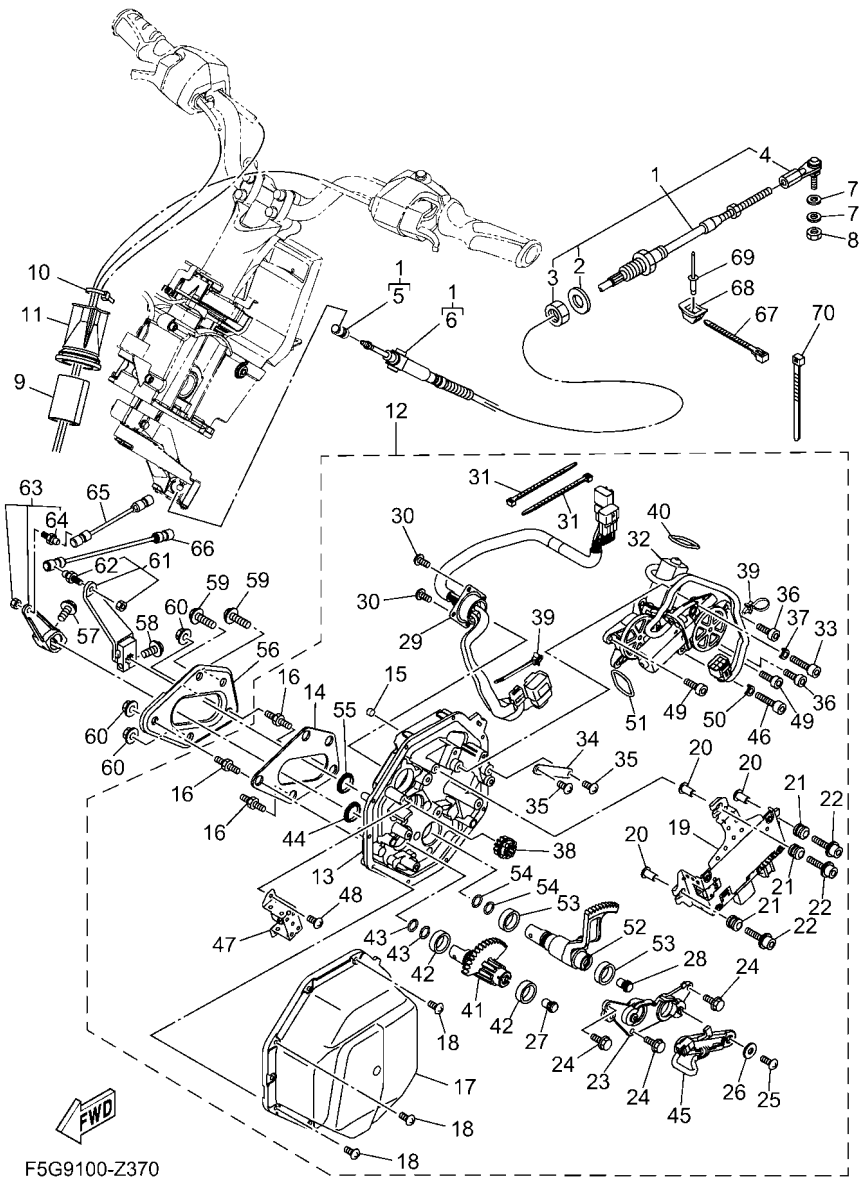

FIG. 36 CONTROL CABLE

REF. NO.	PART NO.	DESCRIPTION	F7K2	F7K3				REMARKS
1	F1S–61481–12	CABLE, STEERING	1	1				
2	F1B–61438–00	.PACKING C	1	1				
3	F1B–6151S–01	.NUT	1	1				
4	F1B–61461–02	.STUD, JOINT BALL	1	1				
5	F2N–61460–00	.BALL JOINT ASSY	1	1				
6	F1B–61425–00	.NUT, LOCK	1	1				
7	90201–06906	WASHER, PLATE	2	2				
8	9538R–06700	NUT	1	1				
9	GJ1–U7578–22	PACKING, HOSE 2	1	1				
10	90464–32801	CLAMP	1	1				
11	F3J–U822E–01	GROMMET	1	1				
12	F7K–6140B–00	MOTOR ASSY.	1	1				
13	F4P–6152K–00	.HOUSING	1	1				
14	F3J–63262–00	.SEAL	1	1				
15	F3J–613D0–00	.PLUG	1	1				
16	F3J–67369–00	.BOLT, STUD	3	3				
17	F3Y–6143J–00	.COVER	1	1				
18	F3Y–68198–00	.SCREW	10	10				
19	F7K–68197–00	.CONTROL UNIT	1	1				
20	90387–06119	.COLLAR	3	3				
21	6A0–82317–01	.DAMPER, IGNITION COIL	3	3				
22	F3J–613B4–20	.BOLT	3	3				
23	F4P–61256–00	.PLATE	1	1				
24	F3Y–613B3–00	.BOLT, HEXAGON	3	3				
25	F3J–68198–20	.SCREW	2	2				
26	F3J–613C3–10	.WASHER, PLAIN	2	2				
27	F3J–60428–00	.MAGNET, SENSOR	1	1				

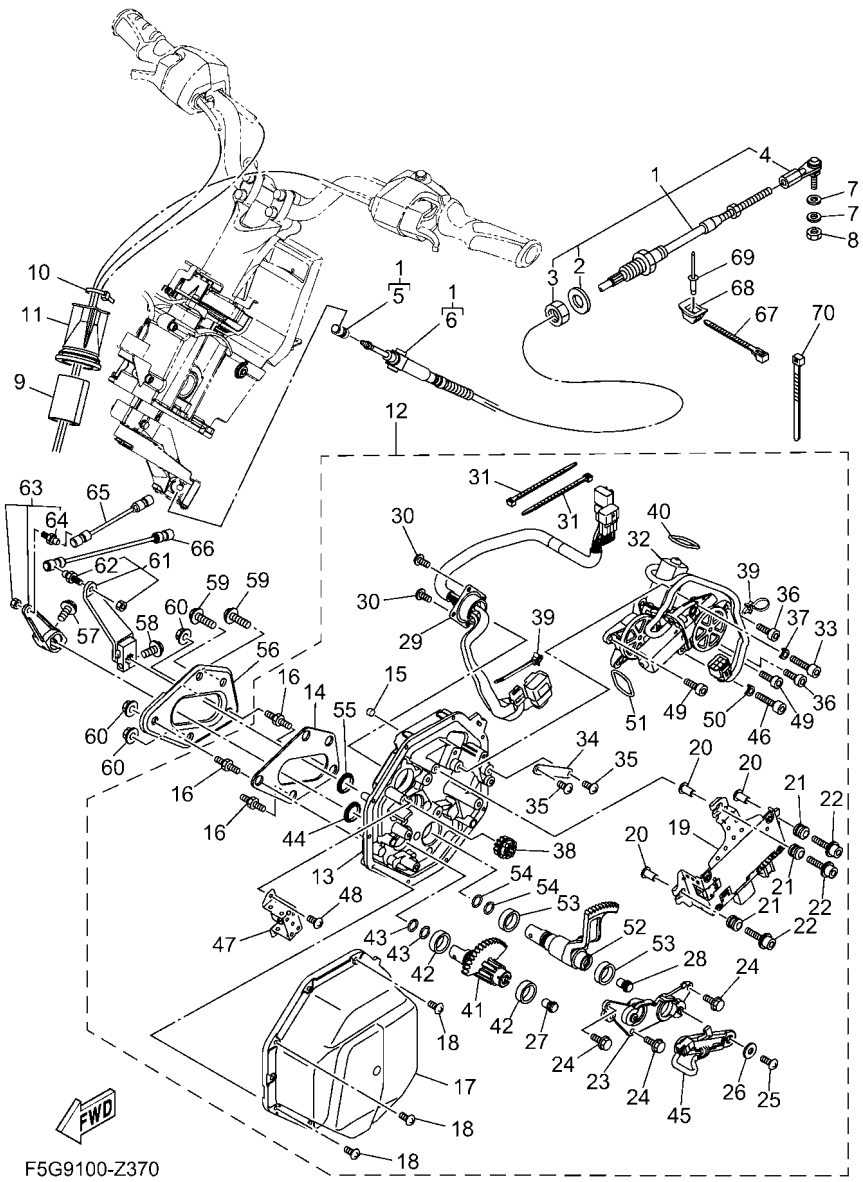

FIG. 36 CONTROL CABLE

REF. NO.	PART NO.	DESCRIPTION	F7K2	F7K3				REMARKS
28	F3J–60428–00	.MAGNET, SENSOR	1	1				
29	F4P–68270–00	.WIRE HARNESS ASSY.	1	1				
30	F3J–68198–00	.SCREW	4	4				
31	F3J–68273–00	.CLAMP	2	2				
32	F4P–68352–00	.MOTOR	1	1				
33	F3J–613B4–00	.BOLT	1	1				
34	F3Y–61348–00	.PLATE	1	1				
35	F3J–68198–20	.SCREW	2	2				
36	F3J–613B4–10	.BOLT	2	2				
37	F3J–61492–00	.SPACER	1	1				
38	F4P–60211–00	.GEAR 1	1	1				
39	F4P–68273–00	.CLAMP	2	2				
40	F4P–613A5–10	.O-RING	1	1				
41	F3Y–60221–10	.SHAFT, 1	1	1				
42	F3Y–61344–00	.BUSH	2	2				
43	F4P–613A5–00	.O-RING	2	2				
44	F4P–61344–00	.BUSH	1	1				
45	F4P–85887–00	.SENSOR ANGLE	1	1				
46	F3J–613B4–00	.BOLT	1	1				
47	F4P–61348–00	.PLATE	1	1				
48	F3J–68198–20	.SCREW	2	2				
49	F3J–613B4–10	.BOLT	2	2				
50	F3J–61492–00	.SPACER	1	1				
51	F4P–613A5–10	.O-RING	1	1				
52	F5G–60222–00	.SHAFT, 2	1	1				
53	F3Y–61344–00	.BUSH	2	2				
54	F4P–613A5–00	.O-RING	2	2				

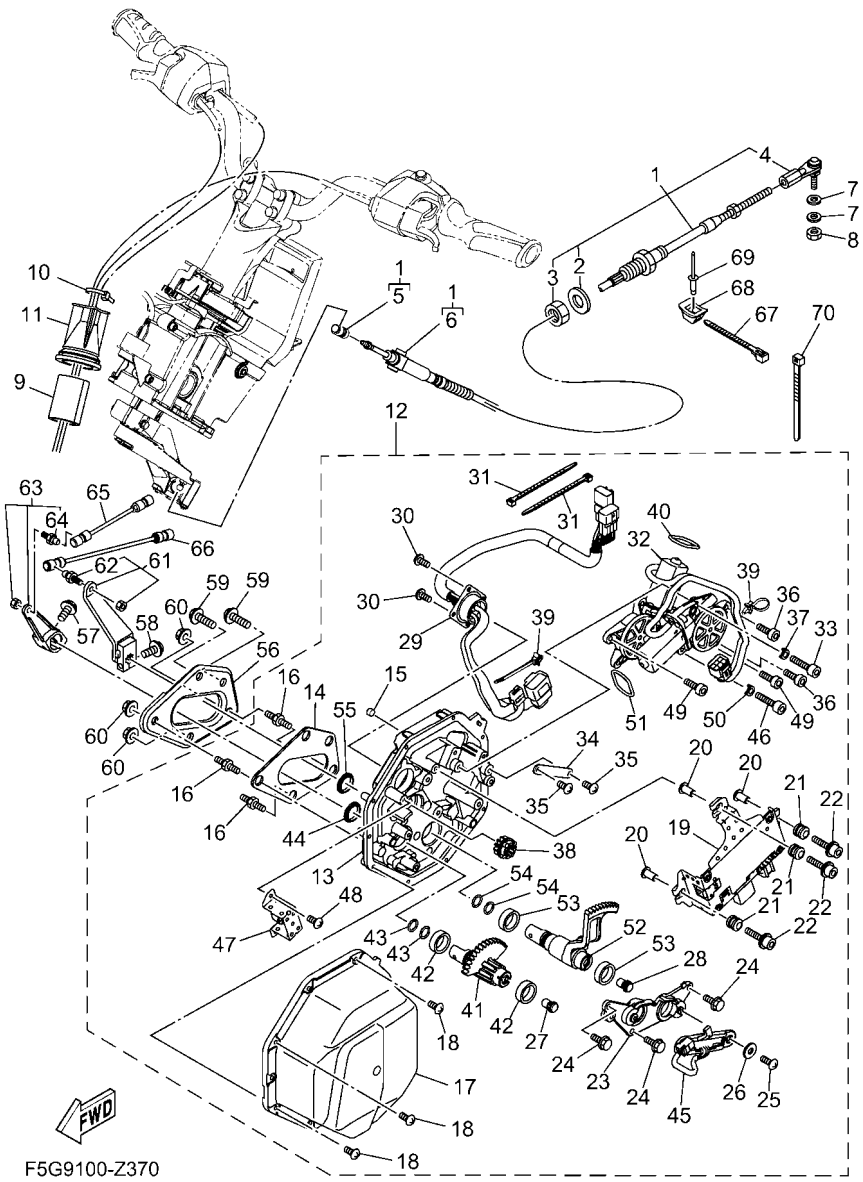

FIG. 36 CONTROL CABLE

REF. NO.	PART NO.	DESCRIPTION	F7K2	F7K3				REMARKS
55	F4P–61344–00	.BUSH	1	1				
56	F4P–U8285–00	PLATE	1	1				
57	90119–06893	BOLT, WITH WASHER	1	1				
58	90110–06897	BOLT, HEXAGON SOCKET HEAD	1	1				
59	90119–08851	BOLT, WITH WASHER	2	2				
60	F3Y–U142L–00	NUT, LOCK	3	3				
61	F5G–6150E–01	TRIM ARM ASSY	1	1				
62	6R7–42316–00	.BOLT, JOINT	1	1				
63	F3Y–6150F–00	SHIFT ARM ASSY	1	1				
64	6R7–42316–00	.BOLT, JOINT	1	1				
65	F3J–6150A–00	ROD ASSY	1	1				
66	F3J–6150D–00	ROD ASSY 2	1	1				
67	90464–32801	CLAMP	3	3				
68	F1W–U828M–00	BASE, CLAMP	3	3				
69	90267–48802	RIVET, BLIND	3	3				
70	90464–32801	CLAMP	1	1				

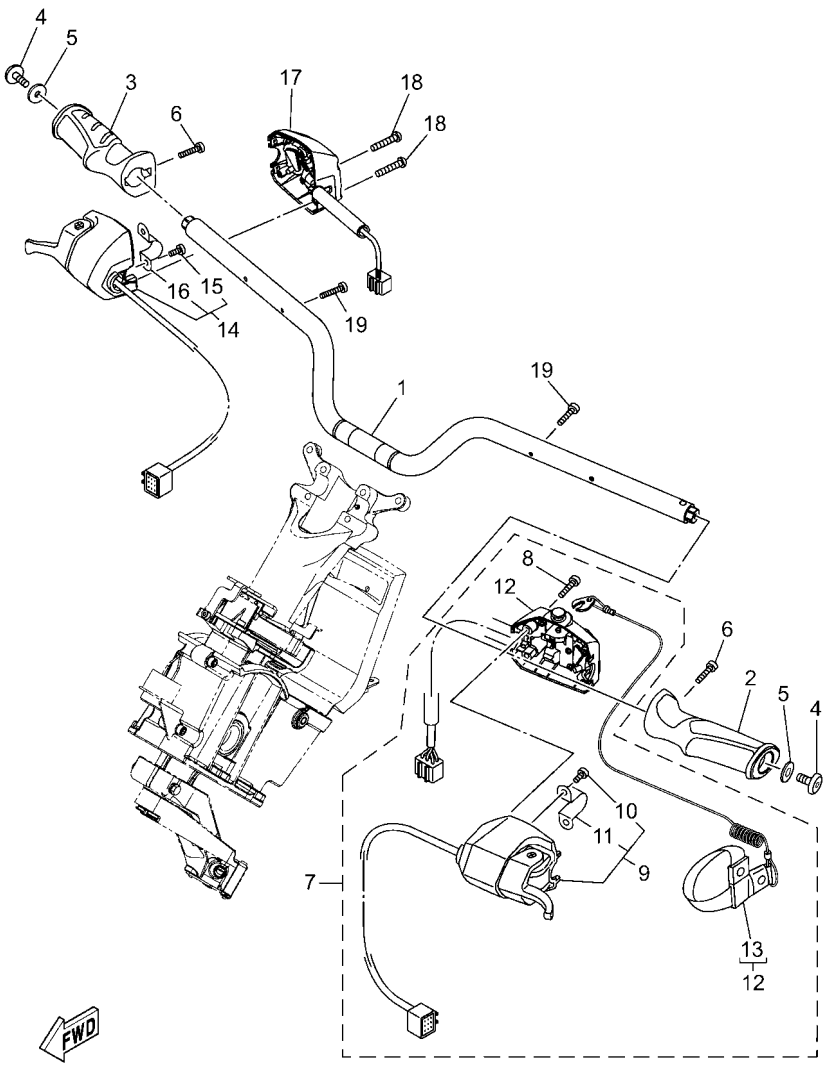

F5G9100-Z380

FIG. 37 STEERING 1

REF. NO.	PART NO.	DESCRIPTION	F7K2	F7K3				REMARKS
1	F5G–U1552–00	HANDLE	1	1				
2	F4P–U155C–00	GRIP,HANDLE	1	1				
3	F4P–U155D–00	GRIP, HANDLE	1	1				
4	90110–06382	BOLT, HEXAGON SOCKET HEAD	2	2				
5	90201–068G0	WASHER, PLATE	2	2				
6	F2S–U1516–00	BOLT	2	2				
7	F7K–68310–21	SWITCH BOX ASSY	1	1				
8	6CS–6725F–00	.BOLT, THROTTLE	2	2				
9	F4P–26411–12	.SHIFT LEVER ASSY	1	1				
10	F4P–6725F–00	..BOLT, THROTTLE	2	2				
11	F4P–61368–00	..SUPPORT	1	1				
12	F7K–8259E–00	.SWITCH ASSY	1	1				
13	EW2–68348–00	..LANYARD, STOP SWITCH	1	1				
14	F4P–14305–12	THROTTLE LEVER COMP	1	1				
15	F4P–6725F–00	.BOLT, THROTTLE	2	2				
16	F4P–61368–00	.SUPPORT	1	1				
17	F7K–81860–00	SWITCH ASSY	1	1				
18	6CS–6725F–00	BOLT, THROTTLE	2	2				
19	91380–04030	BOLT	2	2				

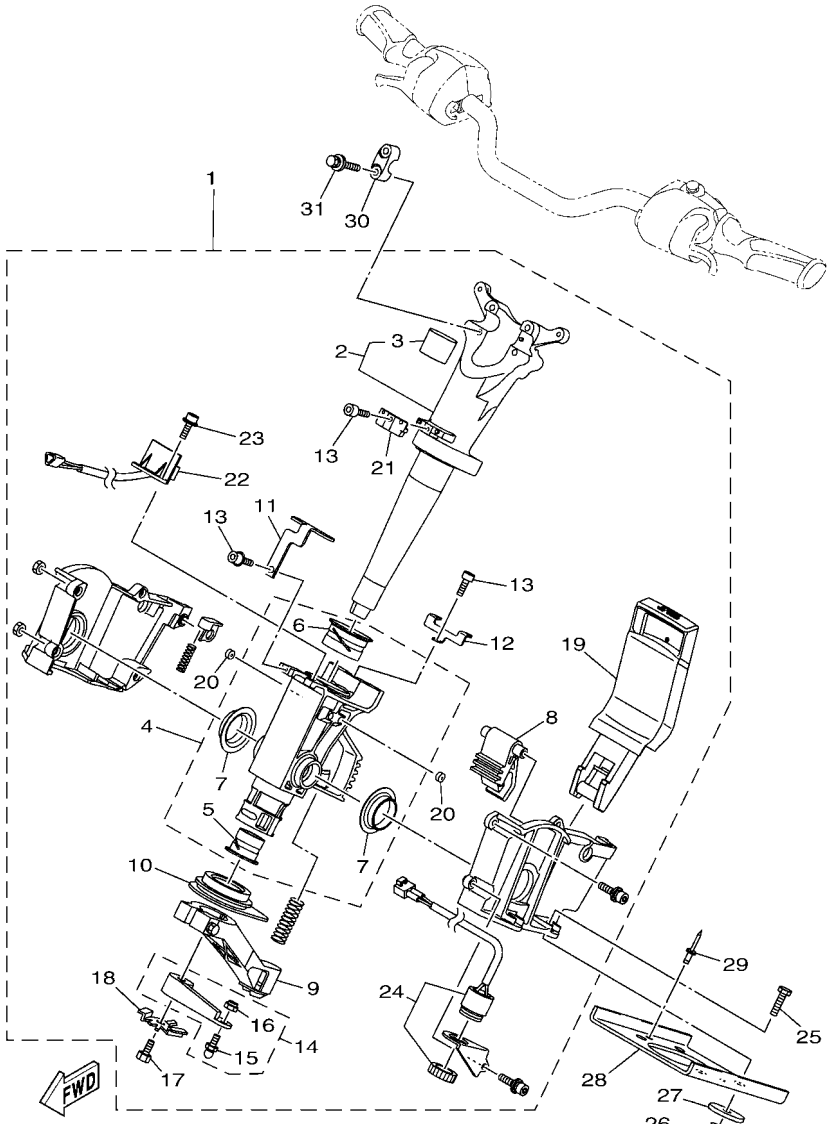

F5G1100-X390

FIG. 38 STEERING 2

REF. NO.	PART NO.	DESCRIPTION	F7K2	F7K3				REMARKS
1	F5G–61400–01	STEERING MASTER ASSY	1	1				
2	F5G–67410–00	.SHAFT ASSY	1	1				
3	F4P–61435–00	..PIPE, SEAL	1	1				
4	F4P–6773D–00	.TUBE	1	1				
5	F1S–6134M–00	..BUSH	1	1				
6	F2C–6134M–00	..BUSH	1	1				
7	F1S–6134M–10	..BUSH	2	2				
8	F1S–61782–00	.LOCK 1	1	1				
9	F1S–6146A–00	.CABLE STOPPER ASSY.	1	1				
10	F1S–6143C–00	.SEAL, RUBBER	1	1				
11	F5G–65938–00	.STAY 1	1	1				
12	F5G–65939–00	.STAY 2	1	1				
13	F4P–613C1–00	.SCREW	4	4				
14	F1S–6153R–02	.ARM ASSY.	1	1				
15	EU0–61461–02	..STUD, JOINT BALL	1	1				
16	95720–06300	..NUT, SELF-LOCKING	1	1				
17	F1W–61355–00	.BOLT	1	1				
18	F1W–6142B–00	.PLATE, RETAINING	1	1				
19	F2S–6151M–00	.LEVER ASSY	1	1				
20	F1W–6358B–00	.PLUG	4	4				
21	F2X–6838C–01	.MAGNET	1	1				
22	F2X–6838B–02	.SENSOR, MAGNET	1	1				
23	F1W–61516–00	.BOLT	5	5				
24	F1S–68341–00	.BUZZER	1	1				
25	90101–08069	BOLT	4	4				
26	F3Y–U142L–00	NUT, LOCK	4	4				
27	F1W–U725E–00	WASHER	4	4				

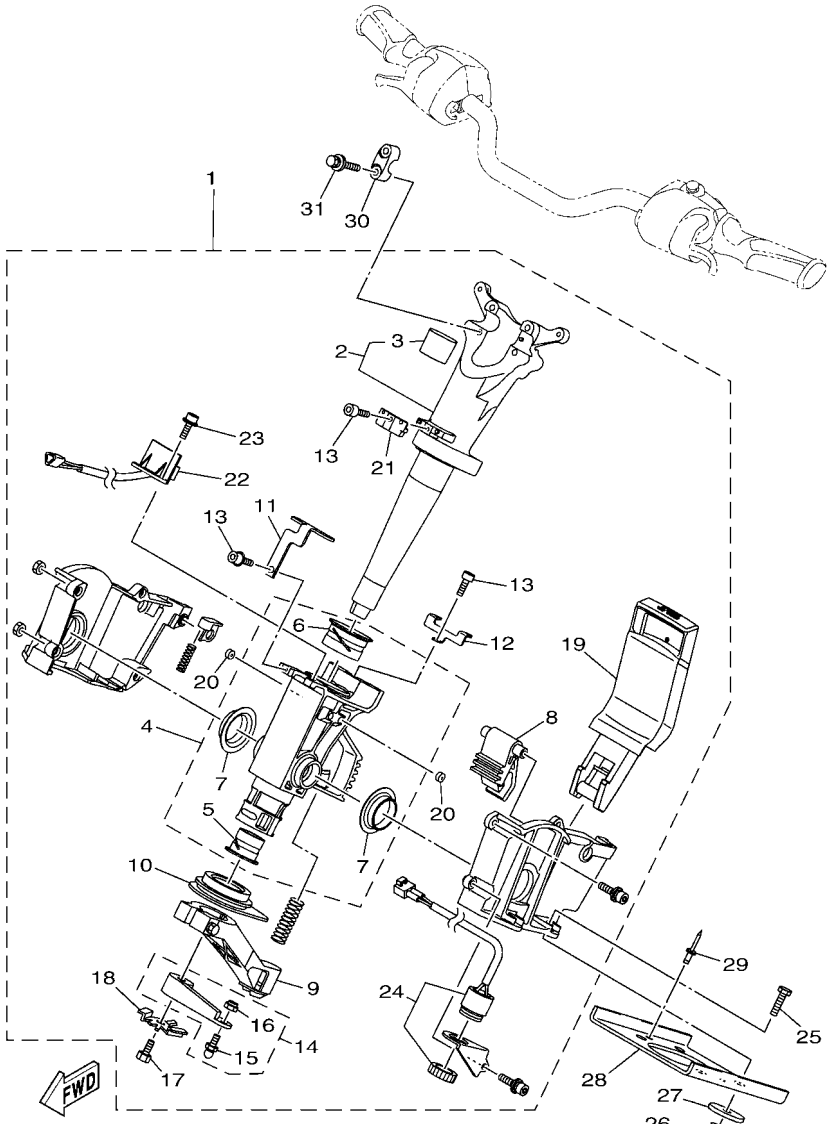

F5G1100-X390

FIG. 38 STEERING 2

REF. NO.	PART NO.	DESCRIPTION	F7K2	F7K3				REMARKS
28	F1X–U1554–00	PLATE, RETAINING	1	1				
29	90267–489U6	RIVET, BLIND	2	2				
30	EU0–23814–31	HOLDER, HANDLE UPPER	2	2				
31	90119–089UU	BOLT, WITH WASHER	4	4				

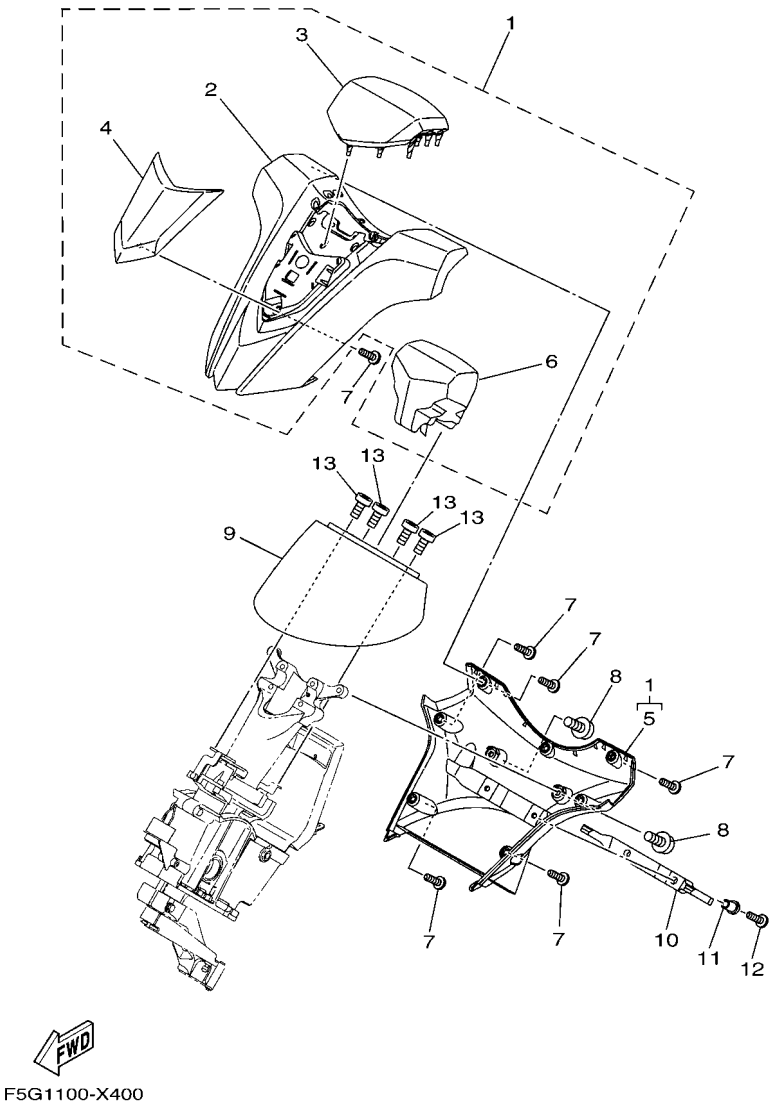

FIG. 39 STEERING 3

REF. NO.	PART NO.	DESCRIPTION	F7K2	F7K3				REMARKS
1	F5G–U142A–60	STEERING PAD COMP	1	1				
2	F5G–U143D–00	.PAD, STEERING 1	1	1				
3	F3X–U142D–00	.COVER, PAD	1	1				
4	F3X–U142M–10	.BASE, PAD	1	1				
5	F5G–U143E–00	.PAD, STEERING 2	1	1				
6	F3X–U142E–00	.CUSHION, PAD 1	1	1				
7	F2S–U13C1–00	SCREW	7	7				
8	F3Y–U2624–00	BOLT	2	2				
9	F2S–U143L–01	PAD, STEERING 3	1	1				
10	F5G–UFTAA–00	HOOK,MOORING 1	1	1				
11	F5G–U151R–00	COLLAR	2	2				
12	F5G–U7823–00	SCREW	2	2				
13	90154–06030	SCREW, BINDING	4	4				

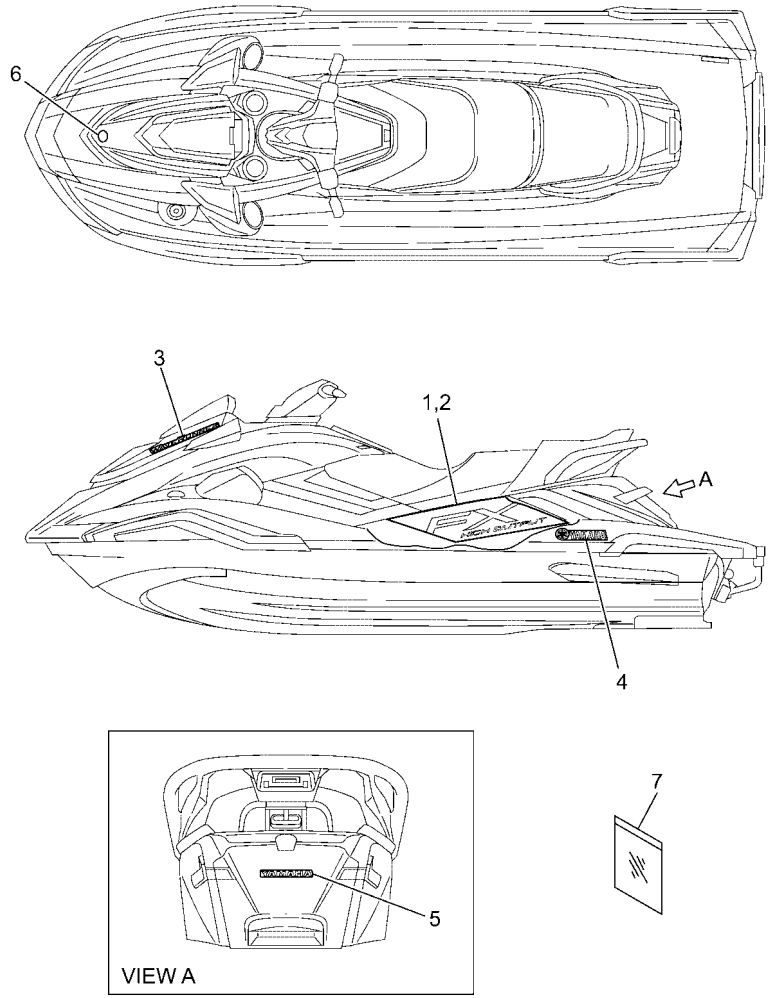

F7K2110-Z400

FIG. 40 GRAPHICS

REF. NO.	PART NO.	DESCRIPTION	F7K2	F7K3				REMARKS
1	F7K–U417H–20	GRAPHIC 7 (LH)	1	1				
2	F7K–U417J–20	GRAPHIC 8 (RH)	1	1				
3	F7K–U417M–20	GRAPHIC C	2	2				
4	F5G–U4116–00	MARK, YAMAHA 3	2	2				
5	F5G–U4114–40	MARK, YAMAHA A	1	1				
6	F3Y–U411H–02	EMBLEM, TUNING FORK	1	1				
7	F3Y–U5901–00	BAG, VINYL	1	1				

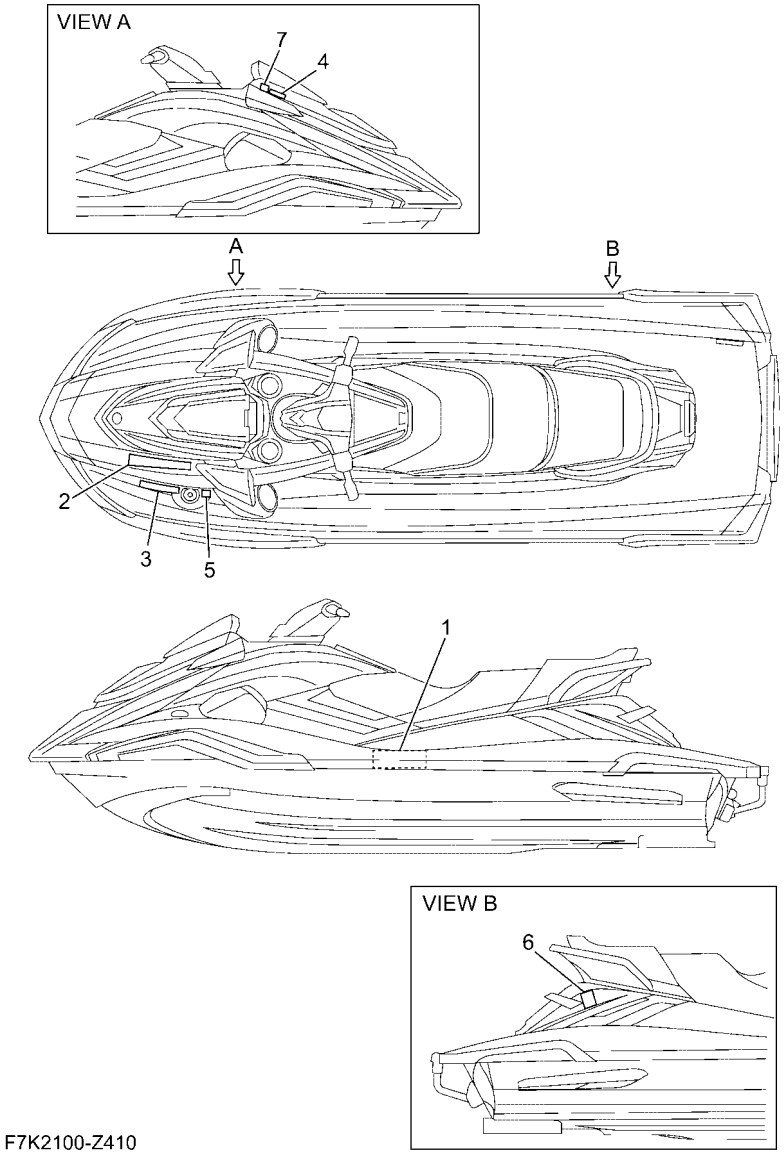

F7K2100-Z410

FIG. 41 IMPORTANT LABELS

REF. NO.	PART NO.	DESCRIPTION	F7K2	F7K3				REMARKS
1	F3V–U41B1–10	LABEL, WARNING UNIFORM 1	1	1				
2	F3V–U41B1–20	LABEL, WARNING UNIFORM 1	1	1				
3	F1B–U415B–11	LABEL, WARNING(FUEL)	1	1				
4	F1B–U41F5–11	LABEL, FIRE EXTINGUISHER 1	1	1				
5	B4F–F817K–00	LABEL, FUEL	1	1				
6	F3V–U416A–10	WARNING LABEL ASSY.	1	1				
7	F4G–U413P–30	LABEL, BUILDERS PLATE	1	1				

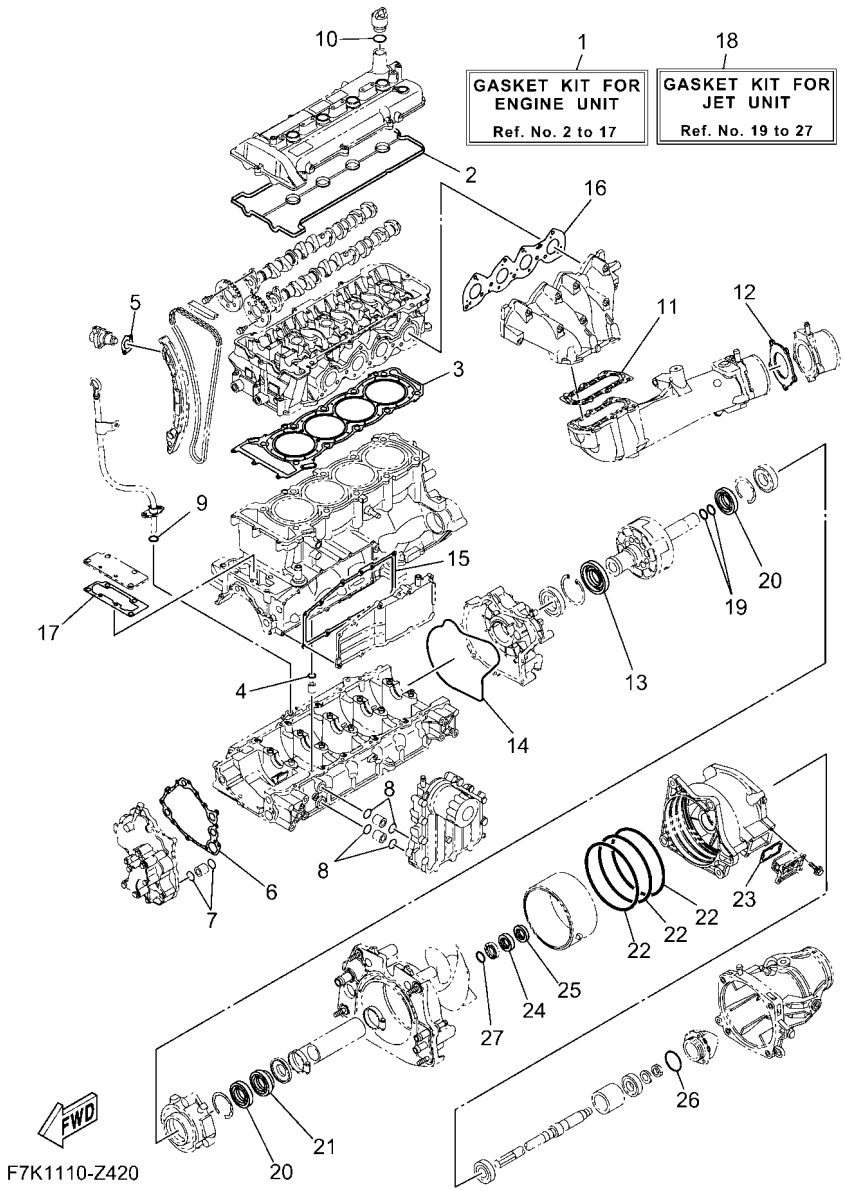

FIG. 42 REPAIR KIT 1

REF. NO.	PART NO.	DESCRIPTION	F7K2	F7K3				REMARKS
1	6LE–W0001–00	GASKET KIT FOR ENGINE UNIT	1	1				
2	6LE–11193–00	.GASKET, HEAD COVER 1	1	1				
3	6LE–11181–00	.GASKET, CYLINDER HEAD 1	1	1				
4	93210–11453	.O-RING	1	1				
5	6LE–12213–00	.GASKET, TENSIONER CASE	1	1				
6	6S5–13563–00	.GASKET	1	1				
7	93210–21631	.O-RING	2	2				
8	93210–18322	.O-RING	4	4				
9	93210–12016	.O-RING	1	1				
10	93210–19123	.O-RING	1	1				
11	6S5–14739–00	.GASKET, MUFFLER DAMPER 1	1	1				
12	6BH–14749–00	.GASKET, MUFFLER DAMPER 2	1	1				
13	6LE–81167–00	.OIL SEAL	1	1				
14	6S5–81168–00	.O-RING	1	1				
15	6BH–13557–00	.GASKET	1	1				
16	6LE–14613–00	.GASKET, EXHAUST PIPE	1	1				
17	6BH–1131B–00	.GASKET, COVER	1	1				
18	6LE–W0001–20	GASKET KIT FOR JET UNIT	1	1				
19	93210–22MF1	.O-RING	2	2				
20	93102–29008	.OIL SEAL	2	2				
21	93102–29009	.OIL SEAL	1	1				
22	93211–65801	.O-RING	3	3				
23	66V–42414–00	.O-RING	1	1				
24	93102–31009	.OIL SEAL	1	1				
25	93101–31001	.OIL SEAL	1	1				
26	93210–54010	.O-RING	1	1				
27	93210–30611	.O-RING	1	1				

PART NO.	REF. NO.
6LE–11102–00	2 – 2
6LE–1110M–00	1 – 10
6BH–11119–00	2 – 17
6BH–1111E–00	2 – 15
5VY–1111G–00	2 – 14
6LE–1111K–00	1 – 15
6LE–1111M–00	1 – 11
6LE–1111N–00	1 – 12
6S5–11133–10	2 – 3
6S5–11166–10	11 – 1
6S5–11167–10	11 – 4
6LE–11181–00	2 – 12
	42 – 3
6LE–11191–00	1 – 1
6LE–11193–00	1 – 3
	42 – 2
69J–11301–11	3 – 9
6BH–1131B–00	3 – 23
	42 – 17
6BH–1131C–00	3 – 22
6S5–1131M–10–8P	3 – 15
68V–11325–02	3 – 10
6LE–11328–00	1 – 13
67F–11328–01	3 – 11
6LE–11411–00	4 – 1
6LE–11416–00	4 – 2
6LE–11416–10	4 – 2
6LE–11416–20	4 – 2
6LE–11416–30	4 – 2
6LE–11416–40	4 – 2
6S5–11459–01	4 – 14
6LE–11603–00	4 – 4
6LE–11631–00–B0	4 – 3
6ET–11633–00	4 – 5
6S5–11650–10	4 – 7
6S5–11654–10	4 – 8
6LE–11656–00	4 – 9
6LE–11656–10	4 – 9
6LE–11656–20	4 – 9
6LE–11656–30	4 – 9
6S5–12111–00	5 – 5
6S5–12113–00	5 – 8
6S5–12116–00	5 – 7
6S5–12117–00	5 – 9
3LD–12118–00	5 – 10
51Y–12119–00	5 – 11
6S5–12121–00	5 – 6
6S5–12153–00	5 – 13

PART NO.	REF. NO.
3LD–12168–00	5 – 12
3LD–12168–20	5 – 12
3LD–12168–40	5 – 12
3LD–12168–60	5 – 12
3LD–12168–80	5 – 12
3LD–12168–A0	5 – 12
3LD–12168–F0	5 – 12
3LD–12168–H1	5 – 12
3LD–12168–K1	5 – 12
3LD–12168–M1	5 – 12
3LD–12168–R1	5 – 12
3LD–12168–U1	5 – 12
3LD–12168–W1	5 – 12
3LD–12168–Y1	5 – 12
3LD–12169–11	5 – 12
3LD–12169–31	5 – 12
3LD–12169–50	5 – 12
3LD–12169–70	5 – 12
3LD–12169–90	5 – 12
3LD–12169–E0	5 – 12
3LD–12169–G0	5 – 12
3LD–12169–J0	5 – 12
3LD–12169–L0	5 – 12
6LE–12171–00	5 – 1
6ET–12176–00	5 – 3
6BH–12181–10	5 – 2
6LE–12210–00	5 – 17
6LE–12213–00	5 – 18
	42 – 5
6S5–12228–01	2 – 9
6BH–12241–00	5 – 21
6ET–12251–00	5 – 20
6ET–12252–00	5 – 15
6S5–12289–00	4 – 11
6D3–12411–00	2 – 19
6BH–12413–00	2 – 20
6S5–1243E–01	13 – 4
6LE–1244H–00	13 – 14
6HL–12456–00	2 – 10
6LE–1246A–00	13 – 23
6LE–12576–00	13 – 21
6S5–12578–00	2 – 22
64T–12580–00	13 – 30
60E–12581–00	13 – 29
6BH–12584–00	13 – 7
6CS–12588–00	13 – 16
6S5–12589–01	13 – 12
6S5–12858–00	10 – 2

PART NO.	REF. NO.
6LE–12880–00	6 – 5
6S5–1310A–25	9 – 1
6BH–1319K–00	3 – 29
6BH–13300–12	8 – 1
6S5–13317–10	9 – 4
6S5–13337–10	3 – 19
6S5–13405–11	9 – 2
69J–13440–04	10 – 1
60E–13446–00	10 – 12
6S5–13446–10	8 – 5
6BH–13470–21	10 – 3
6S5–13477–00	9 – 3
6BH–13556–00	10 – 4
8FP–13556–10	6 – 10
6BH–13557–00	3 – 16
	42 – 15
6S5–13563–00	8 – 2
	42 – 6
6LE–13641–00	6 – 2
6LE–13750–00	6 – 1
6S5–13761–10	6 – 8
6S5–13907–05	22 – 1
6LE–14126–00	6 – 4
6LE–14156–00	6 – 3
68V–1416A–00	6 – 9
F4P–14305–12	37 – 14
6CS–14445–01	6 – 19
6CS–14446–00	6 – 7
6LE–14572–00	6 – 18
6LE–14613–00	12 – 1
	42 – 16
6LE–14711–00	12 – 2
6LE–14721–00	12 – 6
6S5–14739–00	12 – 7
	42 – 11
6BH–14749–00	12 – 14
	42 – 12
6CS–1475A–00	12 – 20
6S5–14771–00	12 – 11
6BH–14784–01	12 – 15
6LE–15109–00	3 – 1
6ET–15362–00	3 – 26
3Y1–15363–10	1 – 7
6S5–15486–10	9 – 5
5EL–15511–00	19 – 6
6LE–15515–00	18 – 3
6S5–15517–00	18 – 5
6S5–15521–00	18 – 4

PART NO.	REF. NO.
6S5–15590–00	18 – 1
6S5–17031–00	4 – 16
6S5–17525–01	4 – 13
6S5–17572–01	4 – 10
6BH–17586–11	4 – 15
EU0–23814–31	38 – 30
70R–24489–00	33 – 4
6AN–2450B–10	6 – 14
70R–24543–00	33 – 3
F4P–26411–12	37 – 9
6EX–2812A–00	20 – 16
6BH–41661–00–94	24 – 4
6BH–41662–00–94	24 – 5
6R7–42316–00	36 – 62
	36 – 64
66V–42414–00	14 – 9
	42 – 23
67X–44517–10	24 – 1
663–45119–00	15 – 10
6ET–45613–00	15 – 8
6S5–45813–01–94	4 – 12
6BH–4581J–01	15 – 16
68N–5112T–00	27 – 10
F4P–60211–00	36 – 38
F3Y–60221–10	36 – 41
F5G–60222–00	36 – 52
F3J–60428–00	36 – 27
	36 – 28
F4P–61256–00	36 – 23
F3Y–61344–00	36 – 42
	36 – 53
F4P–61344–00	36 – 44
	36 – 55
F3Y–61348–00	36 – 34
F4P–61348–00	36 – 47
F1S–6134M–00	38 – 5
F2C–6134M–00	38 – 6
F1S–6134M–10	38 – 7
F1W–61355–00	38 – 17
F4P–61368–00	37 – 11
	37 – 16
F4P–613A5–00	36 – 43
	36 – 54
F4P–613A5–10	36 – 40
	36 – 51
F3Y–613B3–00	36 – 24
F3J–613B4–00	36 – 33
	36 – 46

PART NO.	REF. NO.
F3J–613B4–10	36 – 36
	36 – 49
F3J–613B4–20	36 – 22
F4P–613C1–00	38 – 13
F3J–613C3–10	36 – 26
F3J–613D0–00	36 – 15
F5G–61400–01	38 – 1
F7K–6140B–00	36 – 12
F1B–61425–00	36 – 6
F1W–6142B–00	38 – 18
F4P–61435–00	38 – 3
F1B–61438–00	36 – 2
F1S–6143C–00	38 – 10
F3Y–6143J–00	36 – 17
F2N–61460–00	36 – 5
EU0–61461–02	38 – 15
F1B–61461–02	36 – 4
F1S–6146A–00	38 – 9
F1S–61481–12	36 – 1
F3J–61492–00	36 – 37
	36 – 50
F3J–6150A–00	36 – 65
F3J–6150D–00	36 – 66
F5G–6150E–01	36 – 61
F3Y–6150F–00	36 – 63
F1W–61516–00	38 – 23
F2S–6151M–00	38 – 19
F1B–6151S–01	36 – 3
F4P–6152K–00	36 – 13
F1S–6153R–02	38 – 14
F1K–61624–00	28 – 5
F0X–61637–00	28 – 8
EU0–61652–00	13 – 27
	27 – 2
F0X–61652–01	28 – 9
F1S–61782–00	38 – 8
EW2–62142–00	33 – 2
F1G–62149–00	33 – 8
F2F–6214A–00	33 – 1
GP7–62159–02	33 – 6
F3J–63262–00	36 – 14
F1W–6358B–00	38 – 20
F2S–6514S–00	26 – 35
F1W–6514T–00	26 – 36
GA7–65772–00	35 – 4
F5G–65938–00	38 – 11
F5G–65939–00	38 – 12
6CS–6725F–00	37 – 8

PART NO.	REF. NO.
6CS–6725F–00	37 – 18
F4P–6725F–00	37 – 10
	37 – 15
F3J–67369–00	36 – 16
F5G–67410–00	38 – 2
F4P–6773D–00	38 – 4
F2S–67743–01	33 – 42
	33 – 43
F1B–67747–00	33 – 20
EW2–67821–00	35 – 3
F7K–68197–00	36 – 19
F3J–68198–00	36 – 30
F3Y–68198–00	36 – 18
F3J–68198–20	36 – 25
	36 – 35
	36 – 48
F4P–68270–00	36 – 29
F3J–68273–00	36 – 31
F4P–68273–00	36 – 39
6S5–682E0–10	22 – 2
F7K–68310–21	37 – 7
F1S–68341–00	38 – 24
EW2–68348–00	37 – 13
F4P–68352–00	36 – 32
F2X–6838B–02	38 – 22
F2X–6838C–01	38 – 21
6D3–81147–00	6 – 12
6LE–81167–00	18 – 13
	42 – 13
6S5–81168–00	18 – 17
	42 – 14
6S5–81315–01	21 – 16
6S5–81328–00	18 – 18
6S5–81337–31	18 – 11
6S5–81364–11	18 – 24
6ET–81410–00	18 – 7
6LE–81450–00	18 – 6
6S5–81800–00	19 – 1
6S5–81810–00	19 – 13
6S5–81820–00	19 – 12
6S5–81826–00	19 – 10
6S5–81830–00	19 – 3
6S5–81840–00	19 – 8
11H–81844–00	19 – 2
4G0–81844–00	19 – 4
5EL–81845–00	19 – 11
6CS–81845–11	20 – 2
3TB–81847–00	19 – 9

PART NO.	REF. NO.
1J7–81847–60	19 – 5
5A8–81850–10	19 – 14
F7K–81860–00	37 – 17
1B7–81940–00	20 – 25
6S5–81942–21	20 – 3
6ET–81948–00	20 – 8
6CS–81953–00	20 – 27
6EX–8195A–00	20 – 15
6EK–81960–10	21 – 1
6LE–81972–00	21 – 3
6ET–81975–01	21 – 2
6JP–82115–00	20 – 23
6JP–82116–00	22 – 32
6CS–82117–00	20 – 24
67F–82151–00	20 – 12
6EX–82151–00	20 – 14
67F–82151–10	20 – 13
67F–82151–30	20 – 10
67F–82151–40	20 – 11
6EX–82170–02	20 – 9
6S5–82310–10	21 – 8
68V–82317–01	1 – 4
6A0–82317–01	20 – 18
	36 – 21
68V–82504–00	21 – 15
60E–82556–10	22 – 3
6ET–82576–00	20 – 20
1UA–82591–00	21 – 11
	26 – 37
6EM–82599–00	20 – 30
F7K–8259E–00	37 – 12
6LE–8259L–02	20 – 29
4P9–83591–00	21 – 12
60E–83627–00	20 – 4
6LE–83688–00	6 – 11
6EY–84385–00	13 – 32
6CS–85516–00	3 – 30
6LE–8572F–00	3 – 28
6AA–85790–00	21 – 17
F4P–85887–00	36 – 45
60E–85896–02	21 – 13
6LE–8591A–00	20 – 5
6EY–8591S–00	20 – 7
6S5–E118E–02	1 – 9
6ET–E2289–00	15 – 12
67X–E2590–10	13 – 26
6S5–E4410–02	7 – 6
6LE–E4419–00	7 – 12

PART NO.	REF. NO.
6S5–E4436–00	7 – 8
6S5–E4451–01	7 – 7
6S5–E4752–01	12 – 17
B4F–F817K–00	41 – 5
6S5–G2717–00	7 – 9
6HL–G4532–00	24 – 2
6BH–G4574–00	24 – 3
6S5–G5332–00	15 – 3
6S5–G5511–00	14 – 16
6CS–G5538–00	14 – 12
6S5–G5593–00	15 – 11
6CS–G5831–20	14 – 1
6GN–G6882–00	14 – 8
5FU–H2100–20	22 – 4
F5G–H21E1–00	25 – 12
F5G–H254B–00	25 – 11
F5G–HA260–00	22 – 16
6BH–R1142–10	7 – 13
6AN–R1190–00	14 – 36
6HM–R1312–10	14 – 4
6S5–R1313–01	14 – 33
6ET–R1314–10	16 – 4
6BH–R1318–01	14 – 25
6LE–R1321–00	14 – 22
6S5–R1323–00	15 – 1
6AN–R1326–00	14 – 19
6ET–R1333–00	17 – 9
6HH–R1337–00	14 – 6
6ET–R1341–10	16 – 1
6ET–R1342–10	16 – 2
6BH–R1348–00	14 – 23
6S5–R1381–01	15 – 15
6EY–R1959–00	14 – 42
6S5–R2358–00	16 – 11
F5G–U0210–00	25 – 14
F5G–U0228–00	23 – 13
F5G–U0229–00	23 – 6
	23 – 12
F5G–U0392–00	23 – 17
F5G–U0392–10	23 – 21
F5G–U0891–00	22 – 21
F5G–U0891–10	22 – 21
F3X–U1273–00	13 – 1
F3X–U1338–00	25 – 33
F4F–U1338–00	27 – 16
F3X–U1355–00	25 – 35
F5G–U1369–00	23 – 4
	23 – 10

PART NO.	REF. NO.
F5G–U1369–00	23 – 16
	23 – 20
F5G–U1395–01	25 – 15
F3X–U13B4–00	32 – 12
	32 – 21
	32 – 24
F2S–U13C1–00	25 – 38
	26 – 18
	26 – 22
	26 – 24
	28 – 24
	32 – 26
	32 – 27
	39 – 7
F5G–U142A–60	39 – 1
F3X–U142D–00	39 – 3
F3X–U142E–00	39 – 6
F2N–U142L–00	22 – 10
	22 – 19
	25 – 44
	25 – 49
	25 – 54
	25 – 61
	26 – 8
	29 – 3
	29 – 15
	29 – 23
	29 – 28
	29 – 33
	29 – 36
	35 – 25
F3Y–U142L–00	26 – 42
	27 – 30
	31 – 19
	32 – 7
	32 – 19
	36 – 60
	38 – 26
F3X–U142M–10	39 – 4
F5G–U143D–00	39 – 2
F5G–U143E–00	39 – 5
F5G–U143K–00	23 – 5
	23 – 11
F2S–U143L–01	39 – 9
F4P–U1454–00	26 – 45
	26 – 47
6ET–U1461–10	14 – 37
6GA–U1461–10	16 – 14

PART NO.	REF. NO.
F2S–U1516–00	37 – 6
F3X–U151R–00	25 – 34
F5G–U151R–00	39 – 11
F3Y–U153K–00	26 – 11
F5G–U1552–00	37 – 1
F1X–U1554–00	38 – 28
F4P–U155C–00	37 – 2
F4P–U155D–00	37 – 3
F2N–U1628–10	28 – 1
F3J–U1629–00	32 – 10
F1B–U1653–03	28 – 4
F5G–U1708–01	25 – 7
F2C–U1743–00	25 – 39
F7K–U1743–00	22 – 13
F5G–U2119–00	25 – 30
F2N–U2127–00	30 – 3
F2N–U213G–02	30 – 5
6ET–U215E–00	14 – 28
F3X–U2187–00	30 – 1
F3X–U2188–00	30 – 2
F3X–U2249–10	34 – 8
	34 – 20
F3X–U224B–00	34 – 1
F3X–U224C–00	34 – 2
F4P–U2255–00	34 – 17
F1S–U2280–02	27 – 22
F2S–U2284–01	32 – 18
F1S–U2285–01	27 – 23
F3X–U2511–11	29 – 1
F3X–U2512–10	29 – 4
F3X–U2514–N0	29 – 9
F3X–U2514–P0	29 – 17
F3X–U2519–B0	29 – 5
F3X–U251D–10	29 – 24
F3X–U251E–10	29 – 29
F3X–U252C–11	29 – 34
F3X–U252E–10	29 – 8
F3X–U252F–10	29 – 16
F3X–U255C–N0	29 – 25
F3X–U255C–P0	29 – 30
F3Y–U2624–00	39 – 8
F2S–U2624–01	32 – 17
F3X–U264L–01	32 – 28
F3X–U264L–11	32 – 29
F3X–U2663–10	26 – 10
F3X–U2664–01	31 – 3
F1K–U266C–10	25 – 1
F3X–U266D–01	31 – 8

PART NO.	REF. NO.
F2C–U266E–00	31 – 23
F1W–U269B–00	27 – 1
F3X–U271B–00	32 – 1
F2S–U271F–01	32 – 16
F3X–U2723–00	25 – 8
F2C–U2733–00	35 – 18
F3V–U273B–00	17 – 5
F3X–U278A–00	28 – 16
F2S–U278F–01	28 – 17
F2S–U278H–01	28 – 18
F5G–U2811–01	25 – 13
F4N–U2875–00	25 – 22
F3X–U3222–00	26 – 6
	26 – 7
F3V–U351H–00	29 – 38
F3X–U351H–00	29 – 38
F3V–U351J–00	29 – 39
F3X–U351J–00	29 – 39
F3X–U351K–00	29 – 40
F3X–U351M–00	29 – 41
F3X–U351N–00	29 – 42
F3X–U351P–00	29 – 43
F3X–U3581–01	29 – 37
F3X–U370J–J0	25 – 50
F3X–U370K–J0	25 – 55
F5G–U371A–30	31 – 1
F5G–U371B–30	31 – 2
F5G–U372A–30	31 – 6
F5G–U372B–30	31 – 7
F2S–U375E–00	31 – 16
F1W–U3768–01	25 – 41
	25 – 46
	32 – 14
GH1–U3774–00	31 – 12
	32 – 2
F5G–U377B–01–P5	25 – 40
F5G–U377C–01–P5	25 – 45
F5G–U3844–00	25 – 31
F2C–U3850–00	31 – 4
	31 – 9
F5G–U4114–40	40 – 5
F5G–U4116–00	40 – 4
F3Y–U411H–02	40 – 6
F4G–U413P–30	41 – 7
F1B–U415B–11	41 – 3
F3V–U416A–10	41 – 6
F7K–U417H–20	40 – 1
F7K–U417J–20	40 – 2

PART NO.	REF. NO.
F7K–U417M–20	40 – 3
F5G–U41B1–00	25 – 21
F3V–U41B1–10	41 – 1
F3V–U41B1–20	41 – 2
F1B–U41F5–11	41 – 4
F5G–U4256–00	22 – 30
F7K–U4261–00	35 – 11
F5G–U4705–01	25 – 20
F3X–U475B–00	26 – 44
F3X–U475F–00	26 – 46
F3X–U491K–00	26 – 41
F1W–U491K–01	29 – 2
	29 – 10
	29 – 18
	29 – 26
	29 – 31
	29 – 35
F3X–U4949–00	29 – 13
	29 – 21
GP7–U4953–10	28 – 3
	32 – 9
F3X–U4994–00	28 – 22
F3X–U513M–02–PC	26 – 1
F3X–U5148–00	26 – 12
F5G–U515C–00	25 – 17
F0X–U515E–02	26 – 20
F5G–U515N–02–P6	26 – 19
F5G–U515P–60	26 – 23
F4P–U516R–01	25 – 6
	25 – 68
	25 – 70
F2X–U5175–00	25 – 26
	25 – 52
	25 – 57
F5G–U517B–01–P6	26 – 16
F3X–U517C–00	26 – 13
F3X–U517D–01	26 – 5
F3X–U517E–00	25 – 3
	25 – 9
	25 – 23
	25 – 42
	25 – 47
	26 – 17
	32 – 13
	32 – 22
	32 – 25
F5G–U517F–02	25 – 2
F5G–U517R–00	25 – 16

PART NO.	REF. NO.
F5G–U517V–20	26 – 21
F3X–U518E–00	26 – 3
F3X–U518M–01–PC	32 – 15
F5G–U5193–00	26 – 26
	26 – 31
F5G–U519D–01	25 – 18
F5G–U519F–00	26 – 15
F5G–U519G–02	26 – 9
F5G–U5554–02	25 – 25
F4P–U5568–00	25 – 59
F5G–U5568–00	25 – 58
F1K–U5772–04	25 – 65
	33 – 40
F3Y–U5901–00	40 – 7
F3X–U590D–V0	26 – 25
F3X–U590E–V0	26 – 30
F2C–U591A–03	31 – 20
F2C–U591C–00	31 – 21
F2C–U591D–01	31 – 22
F5G–U591L–00	25 – 10
F1K–U5983–01	25 – 63
F5G–U6829–00	25 – 51
	25 – 56
F5G–U6829–09	25 – 32
	25 – 43
	25 – 48
	25 – 53
	25 – 60
	26 – 27
	26 – 32
F1W–U725E–00	38 – 27
F1S–U725E–01	17 – 2
F2S–U72C0–01	17 – 1
6CS–U72M2–00	14 – 26
F2M–U732B–00	24 – 16
F2S–U732B–00	24 – 12
F2S–U732B–10	24 – 14
EU0–U7354–00–01	24 – 9
EU0–U7354–00–03	24 – 9
EU0–U7354–00–05	24 – 9
EU0–U7354–00–10	24 – 9
EU0–U7354–00–20	24 – 9
F1B–U751G–10	35 – 24
F2S–U7525–01	13 – 28
F2C–U753B–01	35 – 16
F7K–U753C–01	35 – 6
F4P–U7550–00	35 – 1
F7K–U7555–01	35 – 7

PART NO.	REF. NO.
F2C–U7557–01	17 – 13
F3X–U7564–00	34 – 3
F2C–U7564–01	35 – 17
GJ1–U7578–12	23 – 2
	23 – 8
GJ1–U7578–22	22 – 22
	22 – 29
	36 – 9
F1S–U757B–01	35 – 23
F7K–U758D–00	35 – 14
F2S–U759B–00	33 – 44
F1K–U759C–00	25 – 62
	33 – 46
	33 – 47
	35 – 13
F1W–U759C–01	33 – 45
F3X–U7617–00	34 – 6
F1B–U761D–02	27 – 7
F3X–U7626–10	34 – 10
F3X–U7628–10	34 – 9
F3X–U7629–10	34 – 7
F4P–U7711–00	33 – 15
6EX–U773D–00	34 – 14
F2T–U773D–00	13 – 5
F4L–U773D–00	33 – 38
6CN–U773D–01	14 – 43
F3X–U7767–00	34 – 5
F3Y–U7767–00	33 – 32
F1B–U7773–00	33 – 19
F5G–U7823–00	39 – 12
F3X–U7823–12	29 – 11
	29 – 19
	29 – 27
	29 – 32
F2N–U7831–10	33 – 22
GP7–U7832–01	33 – 23
GP7–U7833–11	33 – 24
GP7–U7834–00	33 – 27
GP7–U7835–00	33 – 25
GP7–U783F–00	33 – 29
F3X–U7844–01	33 – 30
F0D–U7856–10	33 – 39
F3X–U7857–00	34 – 4
F4P–U785G–00	33 – 16
F0D–U785G–10	33 – 36
GP7–U785H–00	33 – 33
F5G–U8090–01	22 – 20
F5G–U8102–10	23 – 1

PART NO.	REF. NO.
F5G–U8103–10	23 – 7
F4P–U8167–10	33 – 17
F2N–U8169–10	28 – 15
F7K–U8198–00	29 – 12
	29 – 20
F5G–U81AJ–01	23 – 13
F7K–U820A–00	22 – 15
F2S–U8211–00	22 – 8
F4P–U821D–00	22 – 14
F1S–U8221–00	22 – 11
	35 – 2
	35 – 12
EU0–U8221–31	22 – 12
F3J–U822E–01	36 – 11
F2S–U8244–00	31 – 17
F5G–U8262–01	25 – 36
F2C–U826C–00	25 – 5
F5G–U826C–00	22 – 17
F1K–U826C–03	27 – 28
F5G–U826F–01	25 – 37
F5G–U8275–01	23 – 14
F5G–U8275–11	23 – 14
F5G–U827A–00	22 – 24
F4P–U8285–00	36 – 56
F5G–U828E–00	25 – 29
F2P–U828K–00	25 – 64
F1W–U828M–00	22 – 26
	27 – 17
	30 – 7
	33 – 9
	33 – 12
	34 – 13
	35 – 20
	36 – 68
F3X–U8377–00	34 – 19
F1G–U8571–02	17 – 11
F1B–U8572–01	17 – 7
F1W–U8572–01	27 – 27
F2S–U8577–00	17 – 8
F2S–U8592–00	22 – 5
F2S–U8593–00	22 – 6
F3X–U882F–02	28 – 20
F2S–U883B–00	15 – 19
F2S–U883E–00	15 – 20
F1S–U883N–01	28 – 11
F1S–U883P–01	28 – 12
F1X–U883T–02	28 – 13
F3X–U884R–01	28 – 21

PART NO.	REF. NO.
F2S–U890L–05	31 – 11
F3X–U890M–00	32 – 20
F3X–U890N–00	32 – 23
F3X–U892D–00	15 – 23
F3X–U89A1–00–PD	32 – 11
F5G–U974A–00	25 – 67
F5G–U974B–00	25 – 69
F5G–UE6GA–01	23 – 15
F5G–UE6GA–11	23 – 19
F5G–UFTAA–00	39 – 10
6LE–W0001–00	42 – 1
6LE–W0001–20	42 – 18
6LE–W009A–00	2 – 1
6LE–W009B–00	3 – 5
90101–08069	38 – 25
90105–06028	1 – 2
90105–06035	2 – 21
	13 – 24
90105–06184	10 – 6
90105–06185	10 – 7
90105–06903	21 – 9
90105–06M07	3 – 12
90105–07006	5 – 4
90105–08021	3 – 34
90105–08054	10 – 9
90105–08169	10 – 10
90105–08170	10 – 11
90105–08243	6 – 6
90105–08249	18 – 15
90105–08860	28 – 14
90105–10071	3 – 4
90109–06218	26 – 38
90109–06268	3 – 33
90109–06293	2 – 13
90109–06344	5 – 16
90109–06832	15 – 21
90109–06874	24 – 10
90109–06875	24 – 11
90109–08041	17 – 17
90110–06040	28 – 10
90110–06182	3 – 20
90110–06382	37 – 4
90110–06404	8 – 4
90110–06822	14 – 21
90110–06897	36 – 58
90110–08212	18 – 2
90111–06873	25 – 24
90116–06051	3 – 35

PART NO.	REF. NO.
90116–08032	6 – 16
90119–059U4	26 – 14
90119–06078	2 – 16
90119–06311	20 – 17
90119–06820	26 – 28
	26 – 33
90119–06832	22 – 9
	25 – 28
90119–06880	25 – 4
90119–06882	23 – 18
	23 – 22
90119–06889	14 – 10
90119–06891	15 – 14
	16 – 3
90119–06893	14 – 5
	36 – 57
90119–06896	26 – 43
90119–069UH	26 – 40
	28 – 23
90119–069UP	31 – 5
	31 – 10
90119–069UX	16 – 7
90119–06MA4	21 – 4
90119–07235	2 – 6
90119–08034	12 – 4
	12 – 10
90119–08096	12 – 12
90119–08097	12 – 5
	12 – 9
90119–08187	7 – 3
	21 – 6
90119–08822	25 – 19
90119–08823	17 – 6
	17 – 10
	17 – 12
	24 – 8
90119–08828	31 – 18
90119–08829	32 – 6
90119–08840	16 – 5
90119–08851	14 – 34
	14 – 40
	36 – 59
90119–08859	24 – 7
90119–08861	28 – 19
90119–089U7	17 – 14
90119–089UT	20 – 1
90119–089UU	15 – 13
	38 – 31

PART NO.	REF. NO.
90119–10076	12 – 13
90119–10810	14 – 3
	14 – 32
90149–05050	1 – 14
90149–06229	18 – 8
90149–10068	24 – 6
90154–06030	39 – 13
90169–049U1	33 – 26
90176–06047	3 – 36
90176–08080	6 – 17
90201–052E8	18 – 21
90201–06028	9 – 8
90201–06801	16 – 9
	16 – 12
90201–068G0	26 – 29
	26 – 34
	37 – 5
90201–068M4	14 – 38
90201–06906	36 – 7
90201–10801	17 – 3
90201–109U6	31 – 13
	32 – 3
90267–329UR	33 – 28
90267–48802	27 – 20
	34 – 15
	36 – 69
90267–48806	22 – 28
	22 – 31
	26 – 4
	27 – 19
	30 – 4
	30 – 8
	33 – 11
	33 – 14
	35 – 21
90267–489U1	22 – 7
	22 – 18
	25 – 27
	25 – 66
	27 – 29
	33 – 41
	35 – 5
90267–489U2	24 – 13
	24 – 15
	24 – 17
	33 – 5
90267–489U6	26 – 2
	29 – 14

PART NO.	REF. NO.
90267–489U6	29 – 22
	33 – 7
	38 – 29
90267–489U8	27 – 8
	29 – 6
90280–03047	18 – 10
90387–06119	1 – 5
	20 – 19
	36 – 20
90387–06289	15 – 18
90387–06319	16 – 8
90387–06M05	18 – 22
	20 – 22
90387–08M06	14 – 35
	14 – 41
90387–08M30	16 – 6
90387–08M37	7 – 2
	21 – 5
90430–06232	10 – 8
90430–06M03	3 – 13
90430–08119	2 – 8
90430–08209	9 – 10
90430–12002	17 – 15
90445–16027	13 – 19
90445–18012	13 – 8
90445–20800	27 – 12
90445–20804	27 – 11
90446–27M55	27 – 14
90446–27M73	27 – 13
90447–15001	14 – 30
90447–19005	13 – 9
90447–19018	13 – 17
90447–19801	13 – 3
90447–22015	11 – 2
90447–22016	11 – 5
90447–22801	13 – 2
90447–28008	2 – 23
90450–90002	7 – 4
	7 – 5
90450–99801	35 – 9
	35 – 15
90450–99804	35 – 10
90450–99808	12 – 18
90450–99809	12 – 19
90464–31001	21 – 18
90464–31002	21 – 19
90464–32801	22 – 23
	22 – 25

PART NO.	REF. NO.
90464–32801	22 – 27
	23 – 3
	23 – 9
	27 – 21
	27 – 31
	33 – 10
	33 – 13
	34 – 11
	35 – 22
	36 – 10
	36 – 67
	36 – 70
90464–35132	13 – 11
90464–40825	7 – 14
90464–99804	30 – 6
90465–11829	14 – 29
	33 – 34
	33 – 35
	33 – 37
90465–14M66	20 – 31
90467–141A3	13 – 15
	13 – 20
90467–150A1	3 – 31
90467–150A5	13 – 31
	35 – 19
90467–160A0	13 – 10
	13 – 18
	13 – 22
90467–17802	34 – 16
90467–180A5	27 – 6
	27 – 15
90467–190A0	11 – 3
	11 – 8
90467–190A2	33 – 18
90467–200A3	11 – 7
	13 – 6
	13 – 13
	13 – 33
	13 – 34
	27 – 4
90467–240A0	2 – 24
	11 – 6
90467–240A3	27 – 5
90480–22801	7 – 11
90480–22M15	7 – 1
	21 – 7
90601–118UF	14 – 27
	27 – 3

PART NO.	REF. NO.
90601–152U3	15 – 22
90601–155U4	33 – 31
90601–170UG	35 – 8
90601–200U1	27 – 9
	34 – 12
	34 – 18
	34 – 21
91314–06060	9 – 7
91317–05010	18 – 20
91317–06014	18 – 19
91380–04030	37 – 19
91380–06016	21 – 14
91380–06020	18 – 23
91380–06025	5 – 19
91809–16002	2 – 4
	2 – 5
92903–08600	19 – 16
92990–06100	19 – 17
92990–12200	17 – 16
	28 – 7
92990–20600	14 – 17
9299R–05200	27 – 18
	27 – 25
	29 – 7
9299R–10200	31 – 14
	32 – 4
93101–31001	14 – 15
	42 – 25
93102–29008	15 – 4
	42 – 20
93102–29009	15 – 7
	42 – 21
93102–31009	14 – 14
	42 – 24
93210–06632	3 – 27
93210–11453	3 – 3
	42 – 4
93210–12016	3 – 32
	42 – 9
93210–13003	6 – 13
93210–18322	10 – 13
	42 – 8
93210–19123	1 – 8
	42 – 10
93210–21631	8 – 6
	42 – 7
93210–22MF1	15 – 2
	42 – 19

PART NO.	REF. NO.
93210–30611	14 – 24
	42 – 27
93210–30M31	13 – 25
93210–54010	14 – 20
	42 – 26
93211–65801	14 – 7
	42 – 22
93306–00809	18 – 12
93306–206Y7	14 – 11
93306–206Y8	15 – 6
93306–355Y0	14 – 13
93410–12003	19 – 7
93450–22174	4 – 6
93604–10M03	3 – 8
	10 – 5
93606–12019	3 – 7
	8 – 3
	12 – 8
	14 – 31
	15 – 17
93608–16M16	12 – 3
93700–06M03	15 – 9
94591–74152	5 – 14
94702–00427	21 – 10
95312–20700	14 – 18
95380–06600	16 – 10
	16 – 13
95380–06700	14 – 39
	19 – 18
9538R–06700	36 – 8
95720–06300	26 – 39
	38 – 16
9572R–05300	27 – 26
9572R–06300	33 – 21
9572R–08300	28 – 2
	32 – 8
9572R–10300	17 – 4
	31 – 15
	32 – 5
95814–06012	20 – 6
	20 – 28
95814–06016	3 – 25
95814–06070	3 – 6
95814–08020	3 – 24
	9 – 9
95817–06014	9 – 6
95824–06025	1 – 6
95E33–06012	6 – 20

PART NO.	REF. NO.
95E34–06014	3 – 17
95E34–06020	3 – 18
	9 – 12
95E34–06035	9 – 11
95E34–08012	2 – 7
95E34–08035	12 – 16
97013–08030	19 – 15
97513–05514	18 – 9
97513–06555	2 – 11
97513–08535	6 – 15
97513–10525	2 – 18
97780–60025	20 – 21
97780–60516	7 – 10
9788R–05025	27 – 24
97E95–06612	20 – 26
97E95–08540	3 – 14
99009–62500	15 – 5
99009–72500	18 – 14
99530–10114	3 – 2
	3 – 21
	18 – 16
99590–14016	14 – 2
99780–12600	28 – 6

PART NO.	REF. NO.