YAMAHA

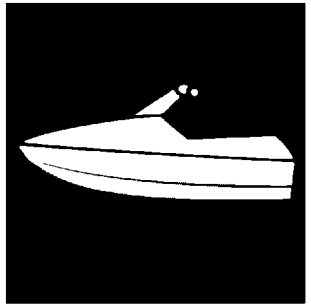

PARTS CATALOGUE

WaveRunner FX Limited SVHO
FX1800A-A (F5G9 /6HLG/6HL2)

YAMAHA
GENUINE
Parts & Accessories

1ZF5G-100E1

( )

FX1800A-A
PARTS CATALOGUE
©2023 by Yamaha Motor Co., Ltd.
1st edition, August 2023
All rights reserved.
Any reprinting or unauthorized use
without the written permission of
Yamaha Motor Co., Ltd.
is expressly prohibited.
Printed in Japan.

FOREWORD

This Parts Catalogue is related to the parts for the model(s) on the cover page. When you are ordering replacement parts, please refer to this Parts Catalogue and quote both part numbers and part names correctly.

1. Modifications or additions which have been made after the issue of the Parts Catalogue will be announced in the Parts News.
   It is advisable that you make the necessary corrections to the Parts Catalogue according to the Parts News.

2. Abbreviations
   The following abbreviations are used in this Parts Catalogue.

   "UR" Use specified parts number.

   "UN" Use as many as needed.

   "AP" Alternate Parts

   "LM" Locally Made (Parts need to be ordered locally)

   "F#" Frame No. (Applicable machine No.)

   "O/S" Over Size

3. The number of components for assembly
   - Parts, which are to be supplied in an assembly, are listed with a dot (.) in front of the part name as shown below.
   - The numeral appearing to the right of each component part indicates the quantity of parts for each assembly unit.

PART NO.	DESCRIPTION	Q'TY	REMARKS
2F5–83310–60	FRONT FLASHER LIGHT ASSY	2	
115–83311–60	.BULB (6V–18W)	1	

4. Applicable colours of graphics are represented in the "REMARKS" as shown below.

PART NO.	DESCRIPTION	Q'TY	REMARKS
2N4–24110–00–X5	FUEL TANK COMP.	2	MXR
3J1–24240–10	.GRAPHIC, FUEL TANK	1	FOR MXR

5. Note that the illustrations for reference in finding parts numbers are not to be used for assembling. When assembling, please use the applicable service manual.

6. The asterisk (*) before a reference number indicates modified items after the first edition.

7. Applicable Serial No.

Engine Serial No.

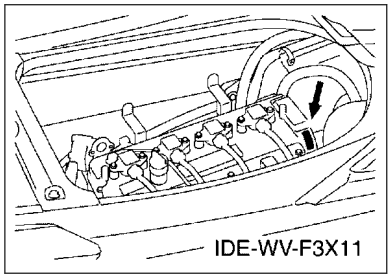

Primary Identification No.

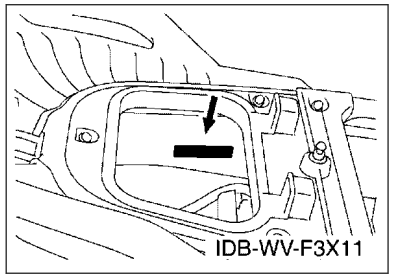

8. Applicable Colour Code (The (*) mark shows Model colour.)

Abbreviation	Colour Name	Colour Code
SSA(*)	BLACK SOLID A	1000

9. Quantity Column Information

Column No.	Name Of Q'ty Column	Destination
1	F5G9	CANADA, EUROPE

10. Applicable Starting Serial No.

Engine Serial No.

Serial No.	Name Of Q'ty Column	Model Code

Primary Identification No.

Serial No.	Name Of Q'ty Column	Model Code
F5G-816621	F5G9	F5G9

CONTENTS

CYLINDER 1....1
CYLINDER 2....2
CRANKCASE....3
CRANKSHAFT & PISTON....5
VALVE....7
INTAKE 1....9
INTAKE 2....10
INTAKE 3....11
OIL PUMP....12
OIL PAN....13
OIL COOLER....14
BREATHER OIL....15
EXHAUST 1....16
EXHAUST 2....17
JET UNIT 1....19
JET UNIT 2....21
JET UNIT 3....22
JET UNIT 4....23
GENERATOR....24
STARTING MOTOR....25
ELECTRICAL 1....26
ELECTRICAL 2....28
ELECTRICAL 3....30
ELECTRICAL 4....32
ENGINE MOUNT....33
ENGINE HATCH 1....34
ENGINE HATCH 2....37
HULL & DECK....39
HULL & DECK 2....41
GUNWALE & MAT....43
VENTILATION....45
SEAT & UNDER LOCKER....46
SEAT & UNDER LOCKER 2....47
FUEL TANK....49
BILGE PUMP....51
EXHAUST 3....52
CONTROL CABLE....53
STEERING 1....56
STEERING 2....57
STEERING 3....59
GRAPHICS....60
IMPORTANT LABELS....61
REPAIR KIT 1....62

INDEX

NUMERICAL INDEX....64

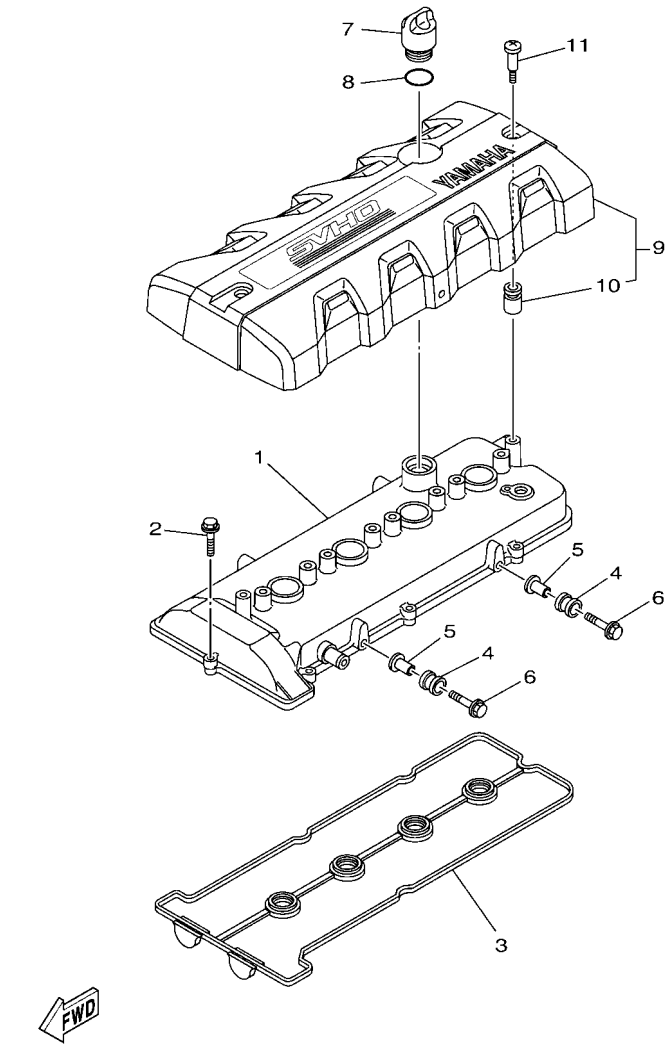

F3X7100-W010

FIG. 1 CYLINDER 1

REF. NO.	PART NO.	DESCRIPTION	F5G9					REMARKS
1	6BH–11191–20	COVER, CYLINDER HEAD 1	1					
2	90105–06028	BOLT, FLANGE	8					
3	6BH–11193–00	GASKET, HEAD COVER 1	1					
4	61N–82317–01	DAMPER, IGNITION COIL	2					
5	90387–06119	COLLAR	2					
6	95824–06025	BOLT, FLANGE	2					
7	6S5–15363–00	PLUG, OIL	1					
8	93210–24M79	O-RING	1					
9	6JN–E110M–00	COVER ASSY 1	1					
10	6S5–E1328–00	.GROMMET, ANODE	2					
11	6S5–E118E–02	BOLT, COVER MOUNTING	2					

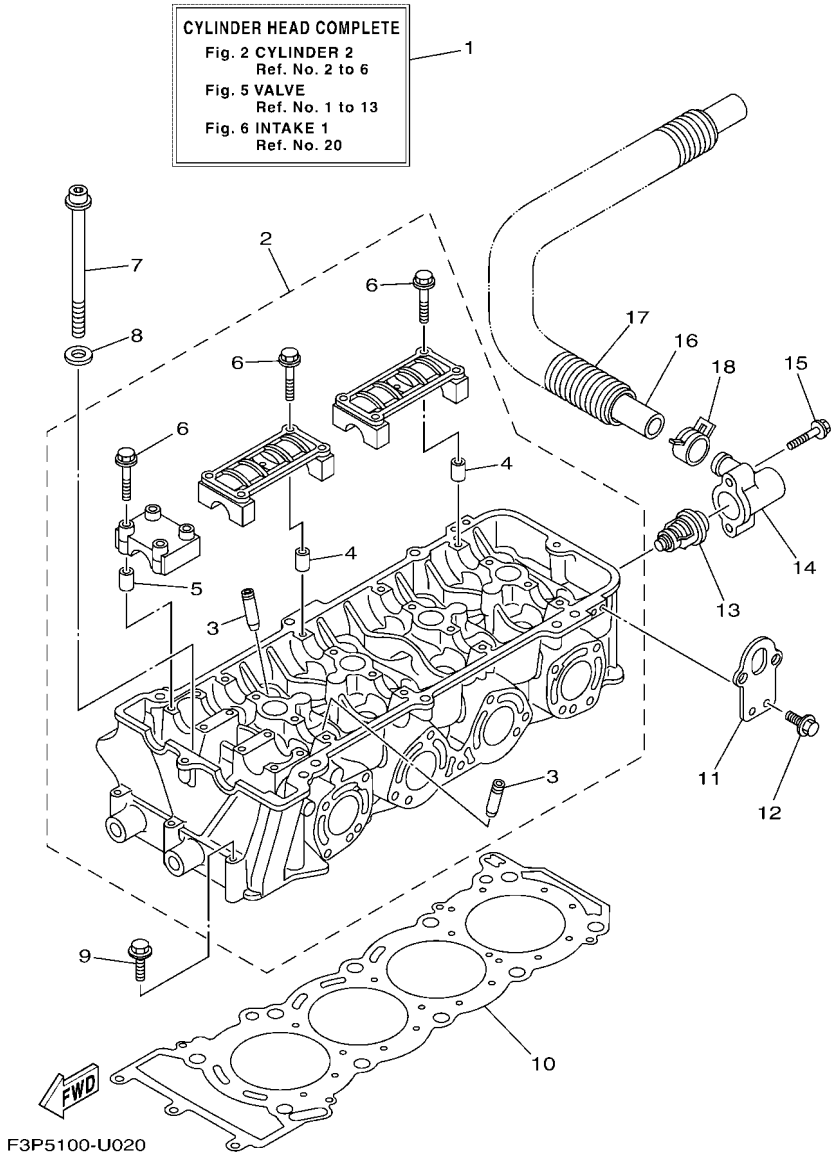

FIG. 2 CYLINDER 2

REF. NO.	PART NO.	DESCRIPTION	F5G9					REMARKS
1	6ET–W009A–20–94	CYLINDER HEAD COMPLETE	1					
2	6S5–11102–20	CYLINDER HEAD ASSY	1					
3	6S5–11133–10	.GUIDE, VALVE 1	16					
4	91809–16002	.PIN, DOWEL	8					
5	91809–16002	.PIN, DOWEL	4					
6	90105–07009	.BOLT, FLANGE	24					
7	6S5–12228–01	BOLT	10					
8	6HL–12456–00	WASHER	10					
9	97513–06555	BOLT, WITH WASHER	3					
10	6JC–11181–00	GASKET, CYLINDER HEAD 1	1					
11	6BH–1111E–00	HANGER, ENGINE 2	2					
12	90119–06078	BOLT, WITH WASHER	4					
13	6D3–12411–00	THERMOSTAT	1					
14	6BH–12413–00	COVER, THERMOSTAT	1					
15	90105–06035	BOLT, FLANGE	2					
16	6S5–12578–00	HOSE 3	1					
17	90447–28008	TUBE (L850)	1					
18	90467–240A0	CLIP	1					

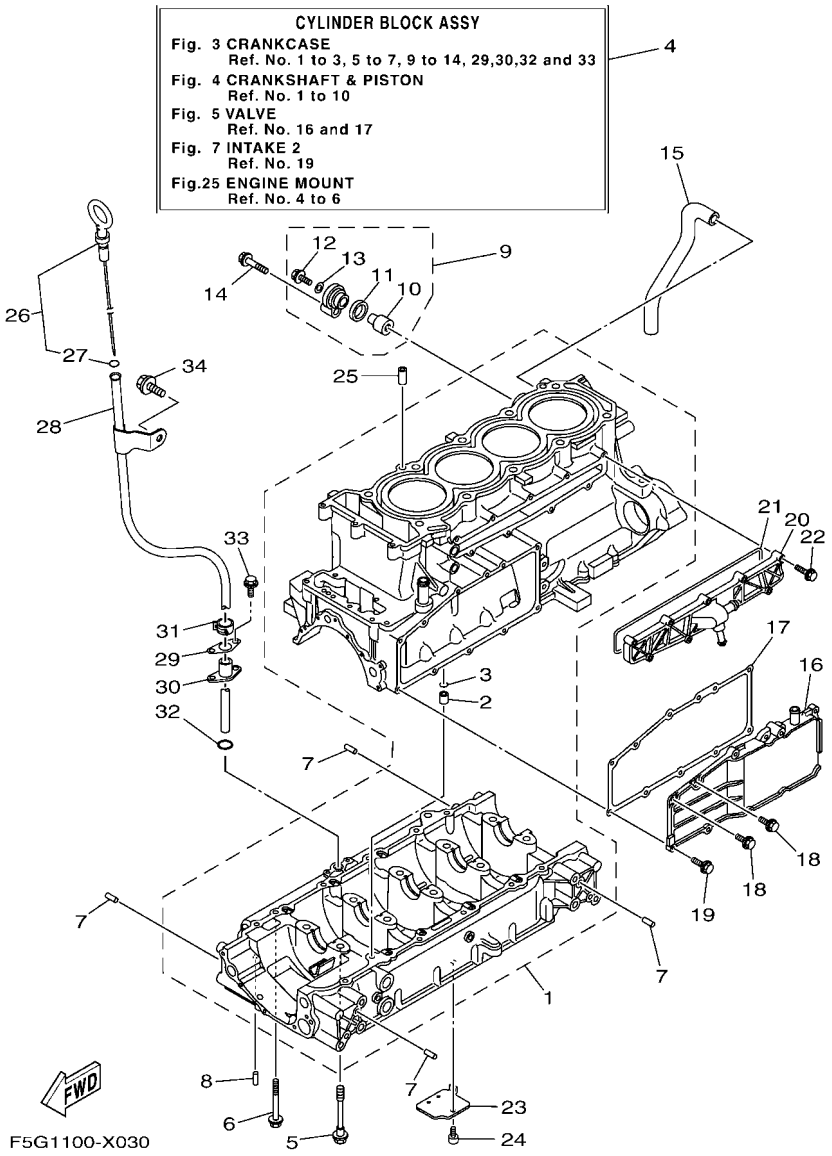

FIG. 3 CRANKCASE

REF. NO.	PART NO.	DESCRIPTION	F5G9					REMARKS
1	6CS–15100–20	CRANKCASE ASSY	1					
2	99530–10114	.PIN, DOWEL	1					
3	93210–11453	.O-RING	1					
4	6CS–W009B–21–94	CYLINDER BLOCK ASSY	1					
5	90105–10071	BOLT, FLANGE	10					
6	95814–06070	BOLT, FLANGE	12					
7	93606–12019	PIN, DOWEL	8					
8	93604–10M03	PIN, DOWEL	2					
9	69J–11301–11	ANODE COVER ASSY	1					
10	68V–11325–02	.ANODE	1					
11	67F–11328–01	.GROMMET, ANODE	1					
12	90105–06M07	.BOLT, FLANGE	1					
13	90430–06M03	.GASKET	1					
14	97E95–08540	BOLT, HEXAGON W/W DEEP RECESS	1					
15	6S5–11377–00	HOSE	1					
16	6S5–1131M–10–8P	COVER	1					
17	6BH–13557–00	GASKET	1					
18	95E34–06014	BOLT, FLANGE DEEP RECESS	2					
19	95E34–06020	BOLT, FLANGE DEEP RECESS	9					
20	6CS–12469–A0	JOINT 1	1					
21	6CS–12517–00	GASKET, WATER INLET	1					
22	95814–06035	BOLT, FLANGE	9					
23	6S5–13337–10	PLATE, BAFFLE LOWER	1					
24	90110–06182	BOLT, HEXAGON SOCKET HEAD	1					
25	99530–10114	PIN, DOWEL	2					
26	6ET–15362–00	PLUG, OIL LEVEL	1					
27	93210–06632	.O-RING	1					

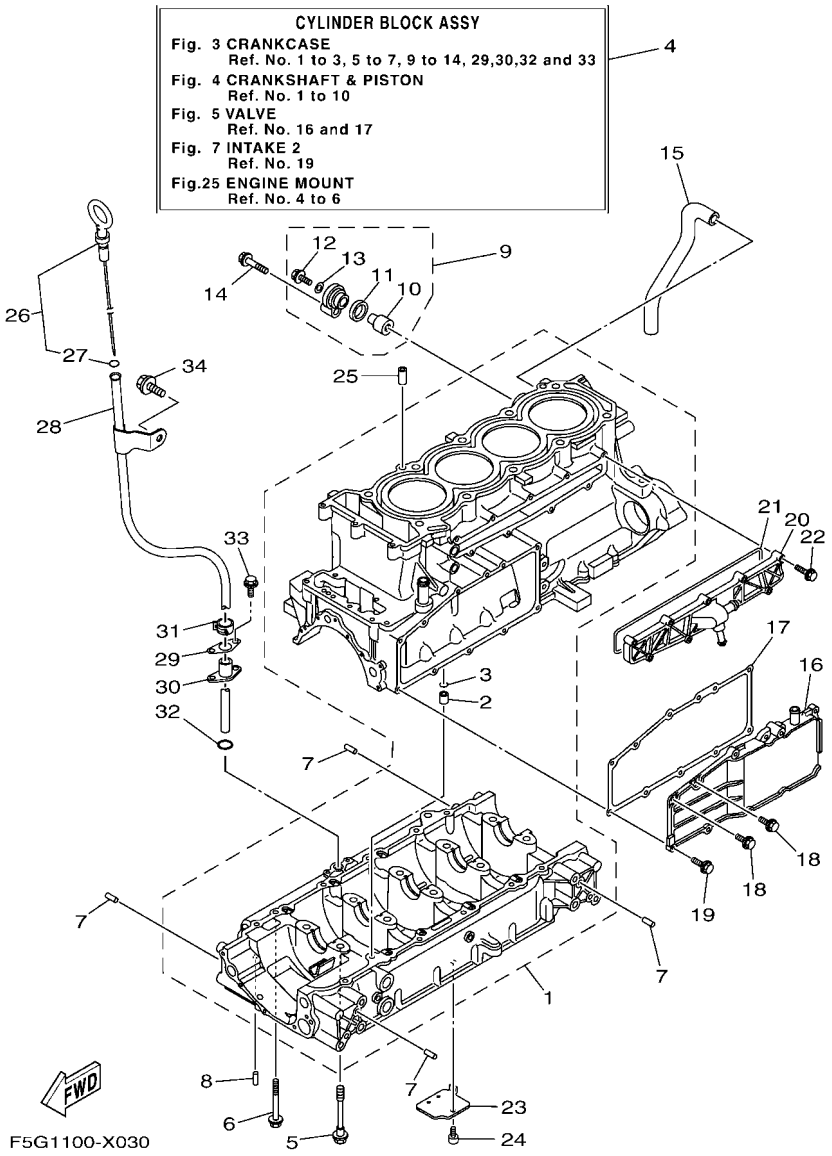

FIG. 3 CRANKCASE

REF. NO.	PART NO.	DESCRIPTION	F5G9					REMARKS
28	6JC–8572F–00	PIPE, OIL LEVEL	1					
29	6BH–1319K–00	PLATE	1					
30	6CS–85516–00	SPACER	1					
31	90467–150A1	CLIP	1					
32	93210–12016	O-RING	1					
33	90109–06268	BOLT	2					
34	90105–08021	BOLT, FLANGE	1					

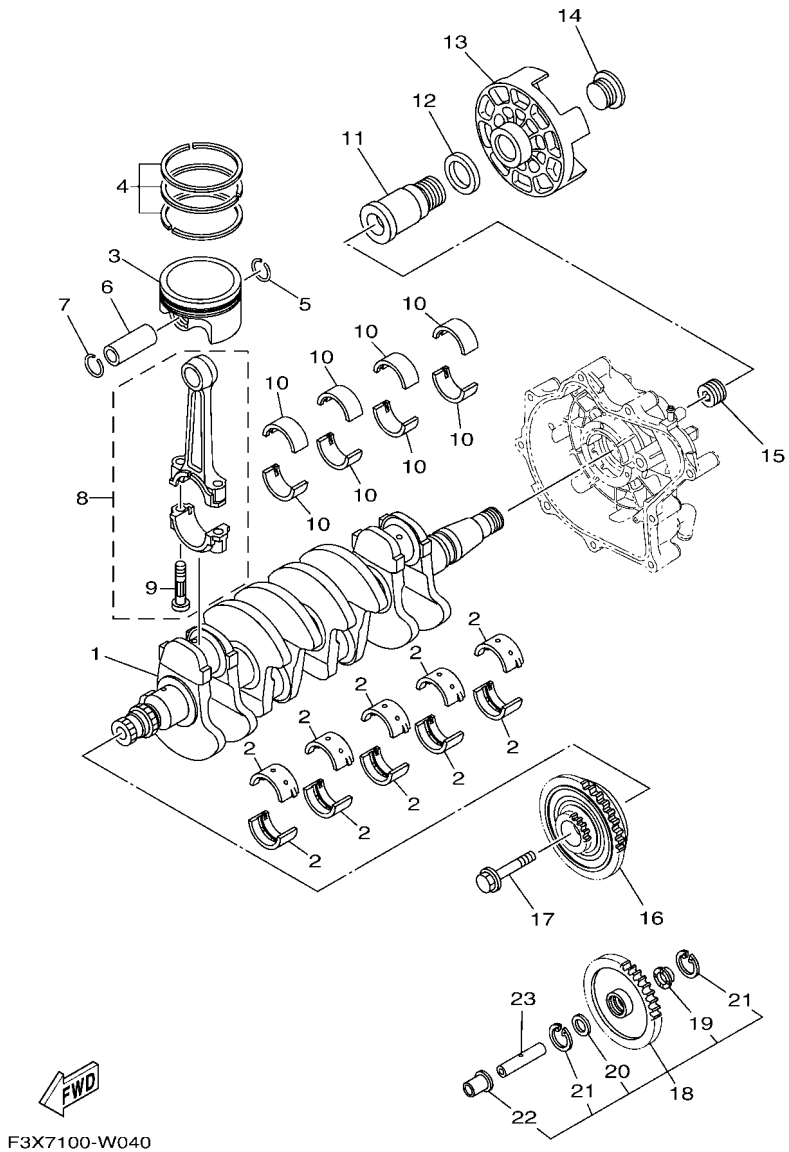

FIG. 4 CRANKSHAFT & PISTON

REF. NO.	PART NO.	DESCRIPTION	F5G9					REMARKS
1	6LE–11411–00	CRANKSHAFT	1					
2	6LE–11416–00	PLANE BEARING, CRANKSHAFT 1	10					UR BROWN
	6LE–11416–10	PLANE BEARING, CRANKSHAFT 1	10					UR BLACK
	6LE–11416–20	PLANE BEARING, CRANKSHAFT 1	10					UR BLUE
	6LE–11416–30	PLANE BEARING, CRANKSHAFT 1	10					UR GREEN
	6LE–11416–40	PLANE BEARING, CRANKSHAFT 1	10					UR YELLOW
3	6ET–11631–01–B0	PISTON (STD)	4					
4	6S5–11603–01	PISTON RING SET (STD)	4					
5	93450–22174	CIRCLIP	4					
6	6ET–11633–00	PIN, PISTON	4					
7	93450–22174	CIRCLIP	4					
8	6S5–11650–10	CONNECTING ROD ASSY	4					
9	6S5–11654–10	.BOLT, CONNECTING ROD	2					
10	6LE–11656–00	PLANE BEARING, CONNECTING ROD	8					UR BLUE
	6LE–11656–10	PLANE BEARING, CONNECTING ROD	8					UR BLACK
	6LE–11656–20	PLANE BEARING, CONNECTING ROD	8					UR BROWN
	6LE–11656–30	PLANE BEARING, CONNECTING ROD	8					UR GREEN
11	6S5–17572–01	SHAFT, TRANSFER	1					
12	6S5–12289–00	WASHER	1					
13	6S5–45813–01–94	FLANGE, COUPLING	1					
14	6S5–17525–01	HOLDER 2	1					
15	6S5–11459–01	NUT, SPECIAL	1					
16	6ET–17800–10	GEAR UNIT ASSY	1					
17	6S5–17031–00	BOLT	1					
18	6S5–W1783–20	DRIVE GEAR & COLLAR SET (18T)	1					
19	6S5–17529–00	.WASHER, THRUST	1					
20	90201–132G5	.WASHER, PLATE	1					

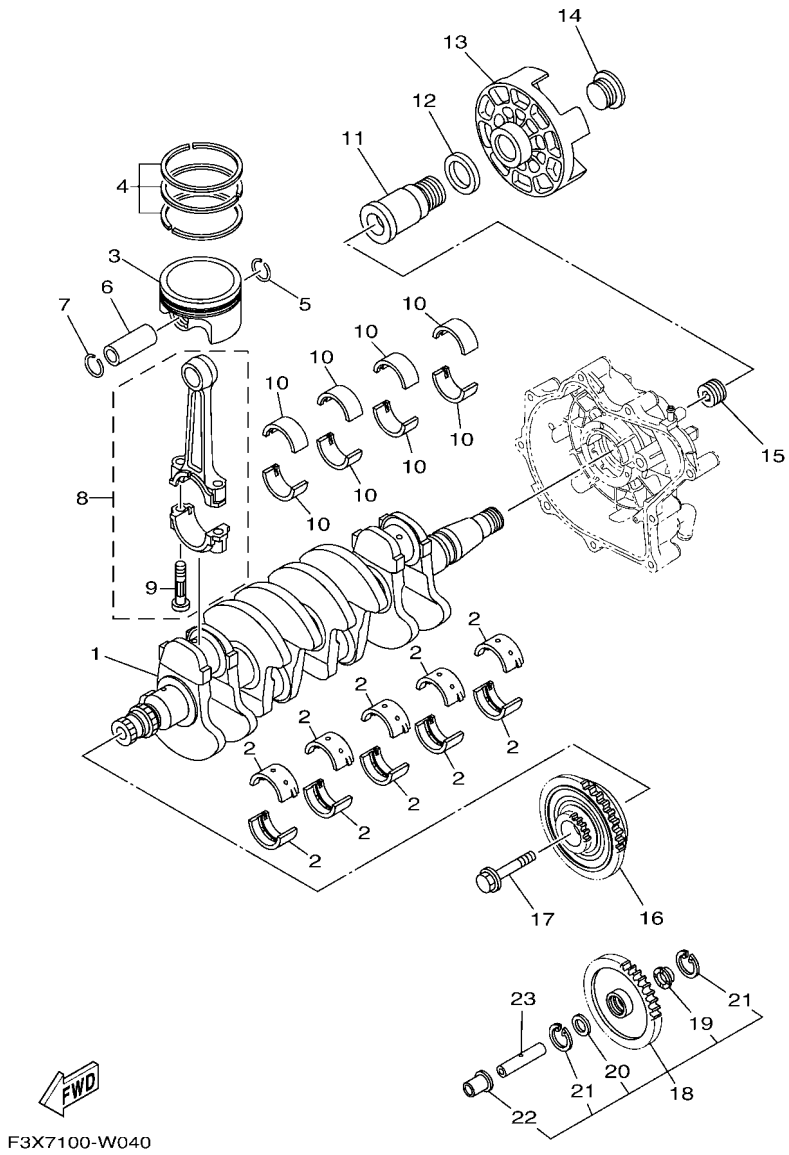

F3X7100-W040

FIG. 4 CRANKSHAFT & PISTON

REF. NO.	PART NO.	DESCRIPTION	F5G9					REMARKS
21	99009–24700	.CIRCLIP	2					
22	6S5–17585–10	.COLLAR, GEAR	1					
23	6S5–17553–00	SHAFT, MIDDLE DRIVEN	1					

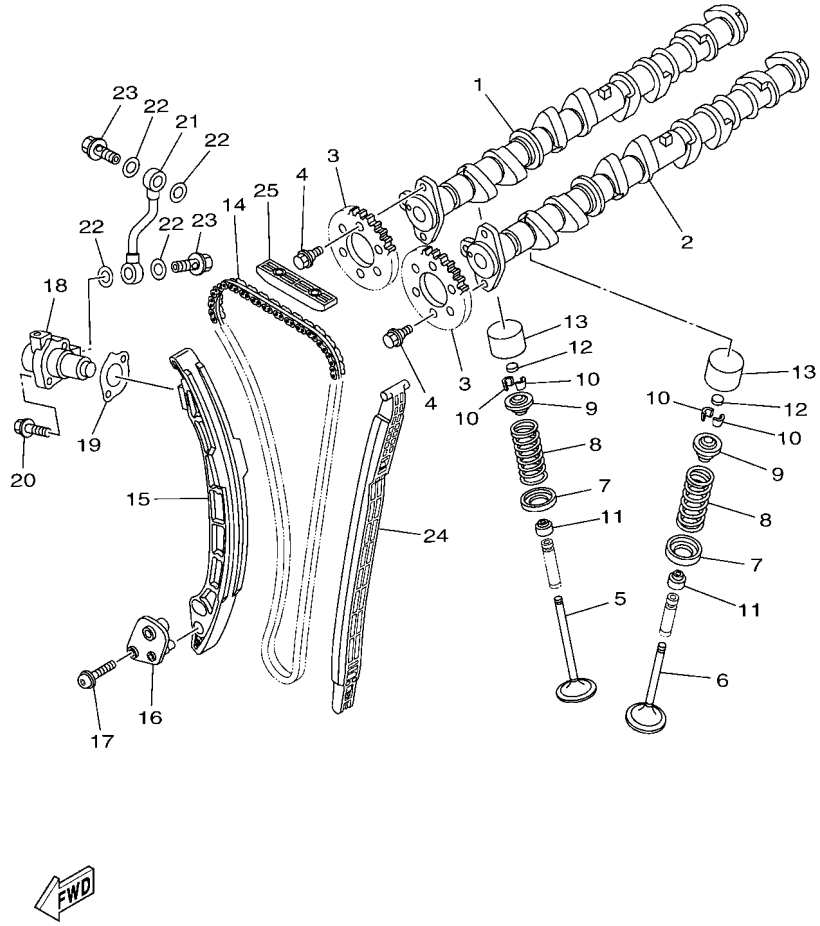

F3X7100-W050

FIG. 5 VALVE

REF. NO.	PART NO.	DESCRIPTION	F5G9					REMARKS
1	6S5–12171–10	CAMSHAFT 1	1					
2	6ET–12181–00	CAMSHAFT 2	1					
3	6ET–12176–00	SPROCKET, CAM CHAIN	2					
4	90105–07006	BOLT, FLANGE	4					
5	6S5–12111–00	VALVE, INTAKE	8					
6	6S5–12121–00	VALVE, EXHAUST	8					
7	6S5–12116–00	SEAT, VALVE SPRING	16					
8	6S5–12113–00	SPRING, VALVE INNER	16					
9	6S5–12117–00	RETAINER, VALVE SPRING	16					
10	3LD–12118–00	LOCK, VALVE SPRING RETAINER	32					
11	51Y–12119–00	SEAL, VALVE STEM	16					
12	3LD–12168–00	PAD, ADJUSTING (1.20)	16					UR
	3LD–12168–20	PAD, ADJUSTING (1.25)	16					UR
	3LD–12168–40	PAD, ADJUSTING (1.30)	16					UR
	3LD–12168–60	PAD, ADJUSTING (1.35)	16					UR
	3LD–12168–80	PAD, ADJUSTING (1.40)	16					UR
	3LD–12168–A0	PAD, ADJUSTING (1.45)	16					UR
	3LD–12168–F0	PAD, ADJUSTING (1.50)	16					UR
	3LD–12168–H1	PAD, ADJUSTING (1.55)	16					UR
	3LD–12168–K1	PAD, ADJUSTING (1.60)	16					UR
	3LD–12168–M1	PAD, ADJUSTING (1.65)	16					UR
	3LD–12168–R1	PAD, ADJUSTING (1.70)	16					UR
	3LD–12168–U1	PAD, ADJUSTING (1.75)	16					UR
	3LD–12168–W1	PAD, ADJUSTING (1.80)	16					UR
	3LD–12168–Y1	PAD, ADJUSTING (1.85)	16					UR
	3LD–12169–11	PAD, ADJUSTING (1.90)	16					UR
	3LD–12169–31	PAD, ADJUSTING (1.95)	16					UR

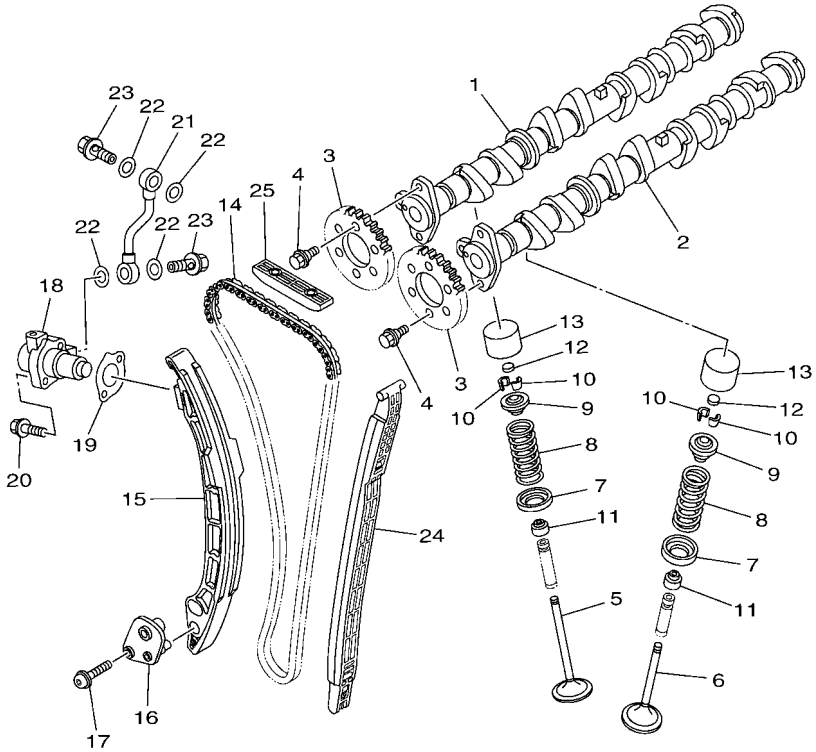

F3X7100-W050

FIG. 5 VALVE

REF. NO.	PART NO.	DESCRIPTION	F5G9					REMARKS
12	3LD–12169–50	PAD, ADJUSTING (2.00)	16					UR
	3LD–12169–70	PAD, ADJUSTING (2.05)	16					UR
	3LD–12169–90	PAD, ADJUSTING (2.10)	16					UR
	3LD–12169–E0	PAD, ADJUSTING (2.15)	16					UR
	3LD–12169–G0	PAD, ADJUSTING (2.20)	16					UR
	3LD–12169–J0	PAD, ADJUSTING (2.25)	16					UR
	3LD–12169–L0	PAD, ADJUSTING (2.30)	16					UR
13	6S5–12153–00	LIFTER, VALVE	16					
14	94591–74152	CHAIN	1					
15	6ET–12252–00	DAMPER, CHAIN 2	1					
16	6BH–12279–00	PLATE	1					
17	92014–06030	BOLT, BUTTON HEAD	2					
18	6S5–12210–02	TENSIONER ASSY, CAM CHAIN	1					
19	6S5–121E2–00	GASKET	1					
20	91380–06025	BOLT	2					
21	6S5–13418–00	PIPE, OIL 2	1					
22	90430–10007	GASKET	4					
23	90401–10040	BOLT, UNION	2					
24	6ET–12251–00	DAMPER, CHAIN 1	1					
25	6BH–12241–00	GUIDE, STOPPER 2	1					

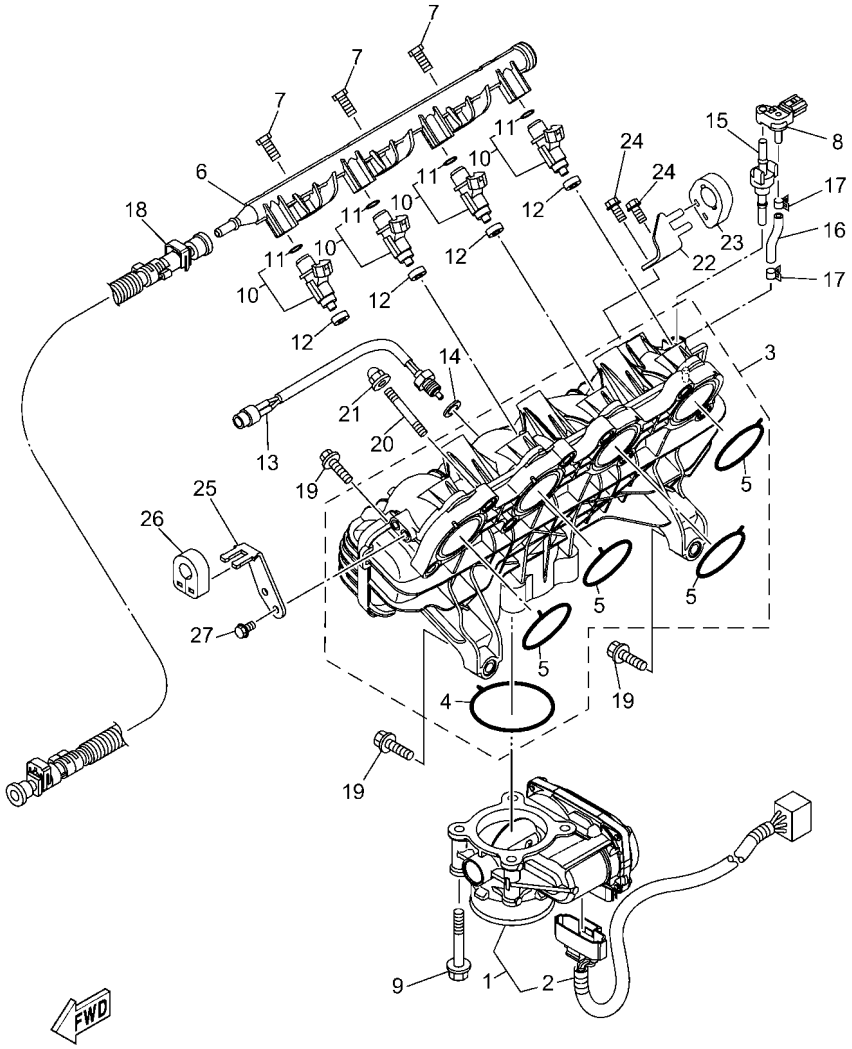

F5G9100-Z060

FIG. 6 INTAKE 1

REF. NO.	PART NO.	DESCRIPTION	F5G9					REMARKS
1	6ET–13750–00	THROTTLE BODY ASSY	1					
2	6S5–82509–00	.WIRE, SUB LEAD	1					
3	6ET–13641–11	MANIFOLD, INTAKE 1	1					
4	6EY–14156–00	.GASKET, INSULATING	1					
5	6ET–14156–00	.GASKET, INSULATING	4					
6	6CS–12880–00	DELIVERY PIPE	1					
7	6CS–14446–00	BOLT	3					
8	6BH–82380–00	SENSOR, PRESSURE	1					
9	90105–08243	BOLT, FLANGE	4					
10	6ET–13761–00	INJECTOR	4					
11	68V–1416A–00	.O-RING	1					
12	8FP–13556–10	GASKET, MANIFOLD	4					
13	6S5–85886–00	SENSOR, AIR TEMPERATURE	1					
14	6S5–14285–00	WASHER	1					
15	6BH–14445–00	GROMMET	2					
16	69J–13532–00	HOSE, VACUUM SENSING 3	1					
17	6S5–14159–01	CLIP	2					
18	6AN–2450B–10	FUEL HOSE ASSY	1					
19	97513–08535	BOLT, WITH WASHER	8					
20	90116–08032	BOLT, STUD	2					
21	90176–08080	NUT, CAP	2					
22	6ET–14572–00	PLATE, STAY	1					
23	6ET–14445–01	GROMMET	1					
24	95E33–06012	BOLT, FLANGE D/R (SMALL HEAD)	2					
25	6CS–14572–00	PLATE, STAY	1					
26	6CS–14445–01	GROMMET	1					
27	95E33–06012	BOLT, FLANGE D/R (SMALL HEAD)	2					

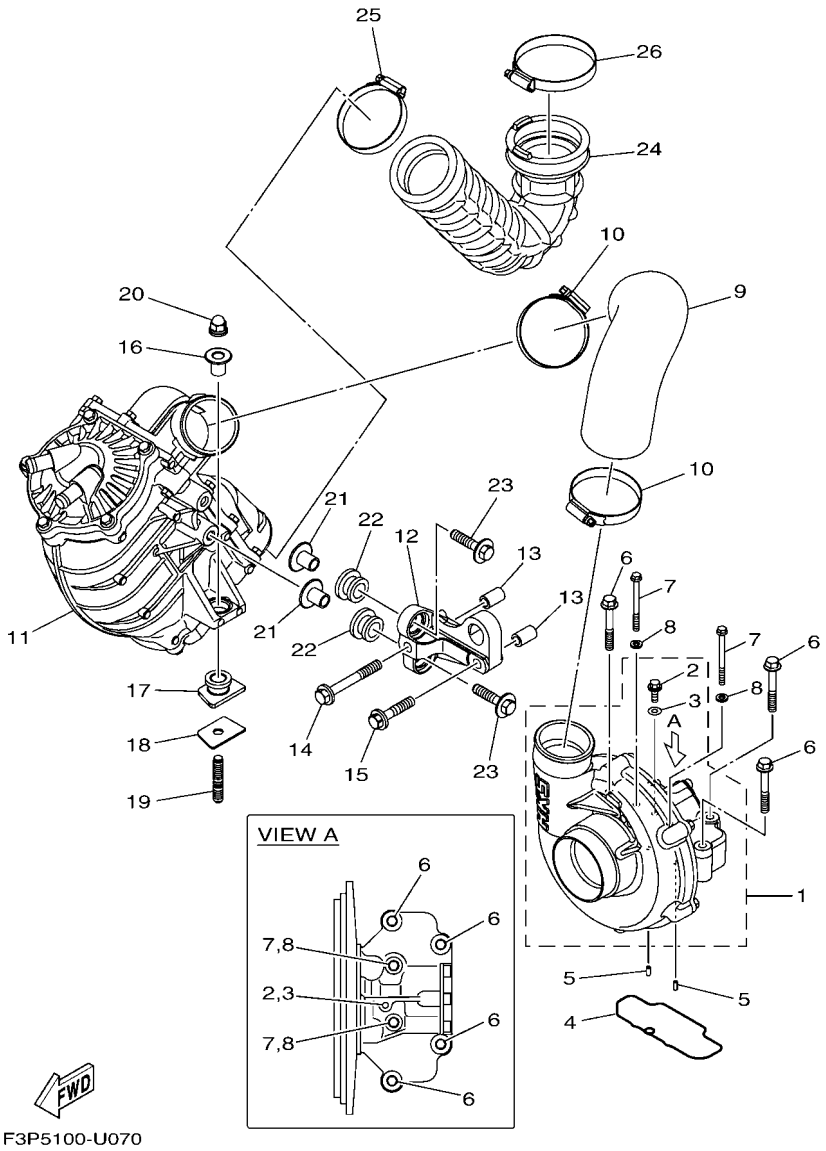

FIG. 7 INTAKE 2

REF. NO.	PART NO.	DESCRIPTION	F5G9					REMARKS
1	6HL–141A0–04	SUPER CHARGER ASSY	1					
2	90105–05020	.BOLT, FLANGE	1					
3	6S5–14199–00	.GASKET	1					
4	6S5–1416A–00	O-RING	1					
5	93604–10M03	PIN, DOWEL	2					
6	95814–08055	BOLT, FLANGE	4					
7	95E34–06065	BOLT, FLANGE DEEP RECESS	2					
8	90201–06028	WASHER, PLATE	2					
9	6HL–14349–00	PIPE	1					
10	90450–75003	HOSE CLAMP ASSY	2					
11	6HL–13670–00	AIR COOLER ASSY.	1					
12	6S5–13691–12	BRACKET, AIR COOLER	1					
13	99590–14016	PIN, DOWEL	2					
14	90119–10047	BOLT, WITH WASHER	1					
15	90119–10046	BOLT, WITH WASHER	1					
16	90387–11007	COLLAR	1					
17	6S5–14435–01	GROMMET	1					
18	6S5–14243–01	PLATE	1					
19	90116–10044	BOLT, STUD	1					
20	90176–10001	NUT, CAP	1					
21	90387–11008	COLLAR	2					
22	90480–21M63	GROMMET	2					
23	90119–10011	BOLT, WITH WASHER	2					
24	6HL–13651–01	PIPE, BOOST	1					
25	90450–75003	HOSE CLAMP ASSY	1					
26	90450–90002	HOSE CLAMP ASSY	1					

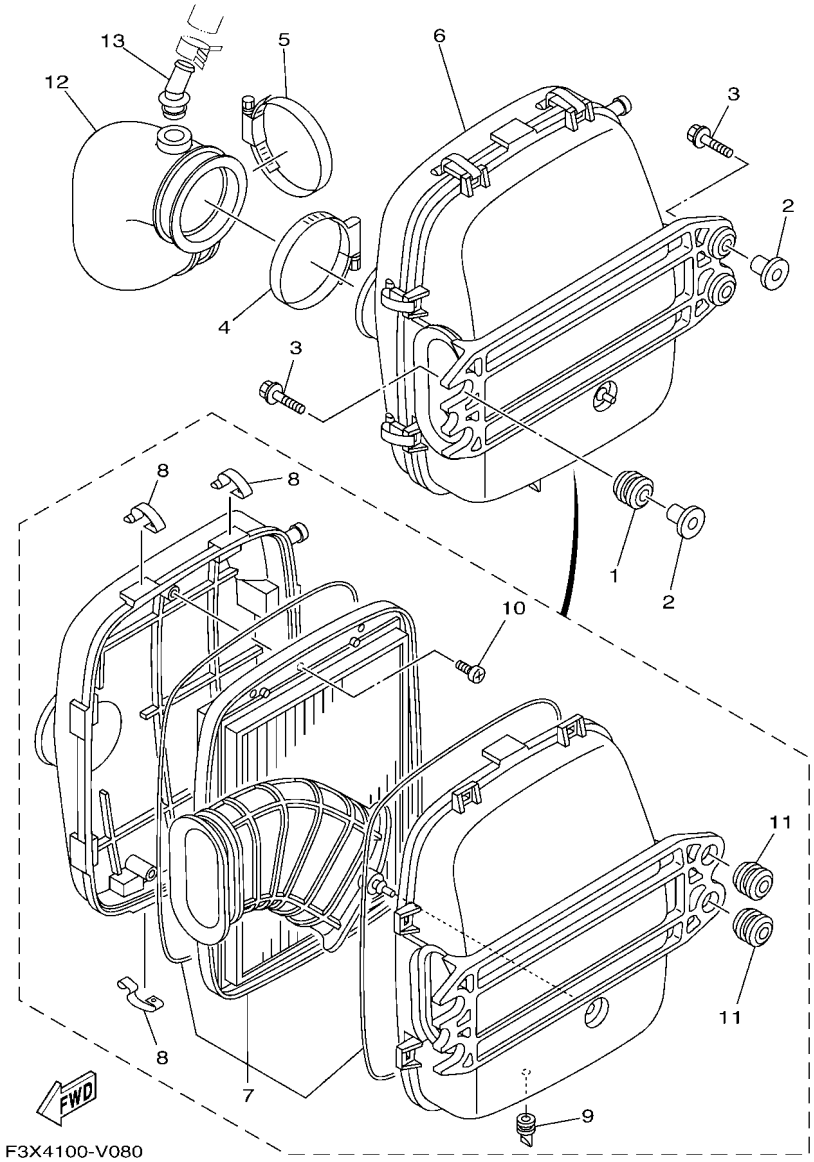

FIG. 8 INTAKE 3

REF. NO.	PART NO.	DESCRIPTION	F5G9					REMARKS
1	90480–22M15	GROMMET	2					
2	90387–08M37	COLLAR	4					
3	90119–08187	BOLT, WITH WASHER	4					
4	90450–90002	HOSE CLAMP ASSY	1					
5	90450–90002	HOSE CLAMP ASSY	1					
6	6S5–E4410–02	AIR CLEANER ASSY.	1					
7	6S5–E4451–01	.ELEMENT, AIR CLEANER	1					
8	6S5–E4436–00	.HOOK	8					
9	6S5–G2717–00	.RUBBER, SEAL 2	1					
10	97780–60516	.SCREW, TAPPING	3					
11	90480–22801	.GROMMET	2					
12	6S5–E4419–00	PIPE	1					
13	6S5–R1142–10	CONNECTION	1					

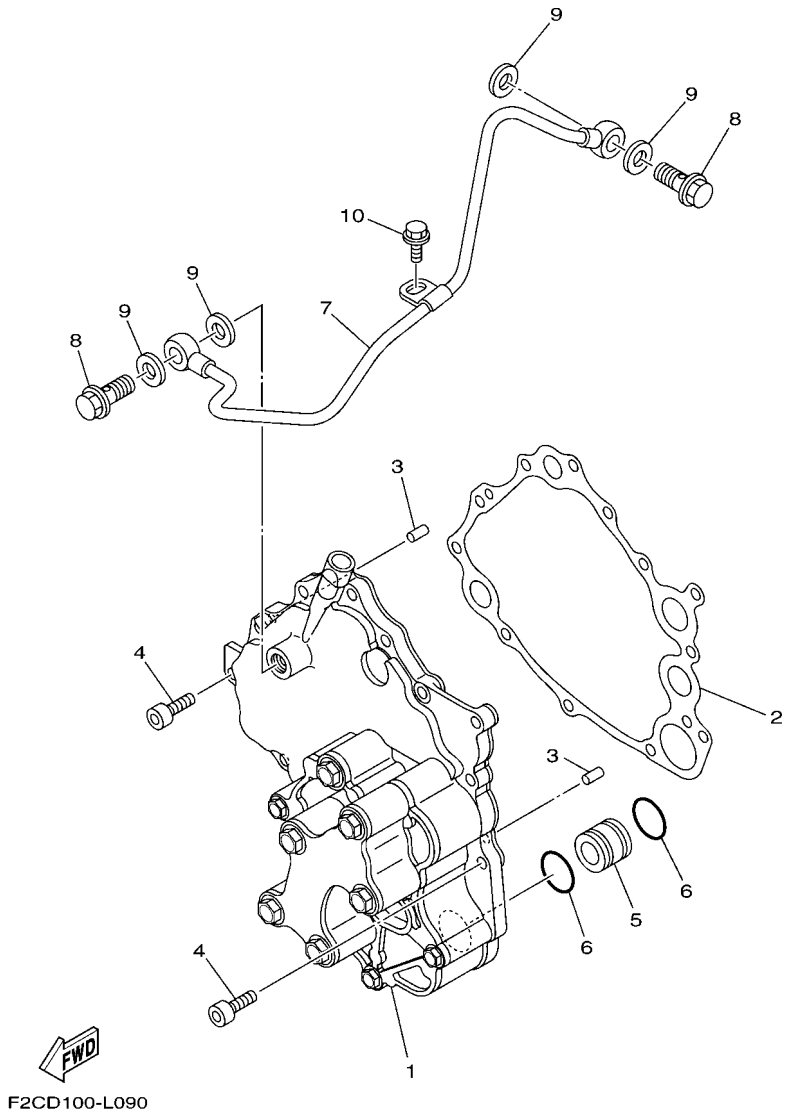

FIG. 9 OIL PUMP

REF. NO.	PART NO.	DESCRIPTION	F5G9					REMARKS
1	6S5–13300–22	OIL PUMP ASSY	1					
2	6S5–13563–00	GASKET	1					
3	93606–12019	PIN, DOWEL	2					
4	90110–06404	BOLT, HEXAGON SOCKET HEAD	12					
5	6S5–13446–10	CONNECTOR	1					
6	93210–21631	O-RING	2					
7	6HL–13416–00	PIPE, OIL 1	1					
8	90401–10040	BOLT, UNION	2					
9	90430–10007	GASKET	4					
10	95E33–06012	BOLT, FLANGE D/R (SMALL HEAD)	1					

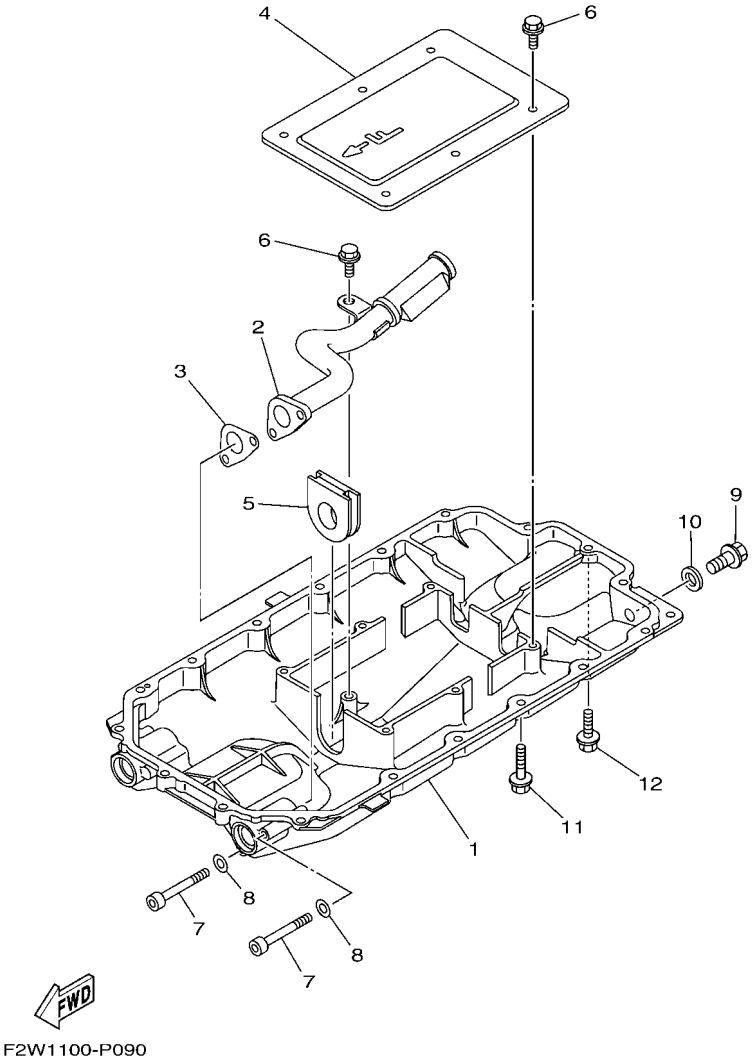

FIG. 10 OIL PAN

REF. NO.	PART NO.	DESCRIPTION	F5G9					REMARKS
1	6S5–1310A–25	PAN, OIL	1					
2	6S5–13405–11	OIL PIPE COMP. 1	1					
3	6S5–13477–00	GASKET	1					
4	6S5–13317–10	PLATE, BAFFLE	1					
5	6S5–15486–10	GROMMET	1					
6	95817–06014	BOLT, FLANGE	7					
7	91314–06060	BOLT, HEXAGON SOCKET HEAD	2					
8	90201–06028	WASHER, PLATE	2					
9	95814–08020	BOLT, FLANGE	1					
10	90430–08209	GASKET	1					
11	95E34–06035	BOLT, FLANGE DEEP RECESS	17					
12	95E34–06020	BOLT, FLANGE DEEP RECESS	1					

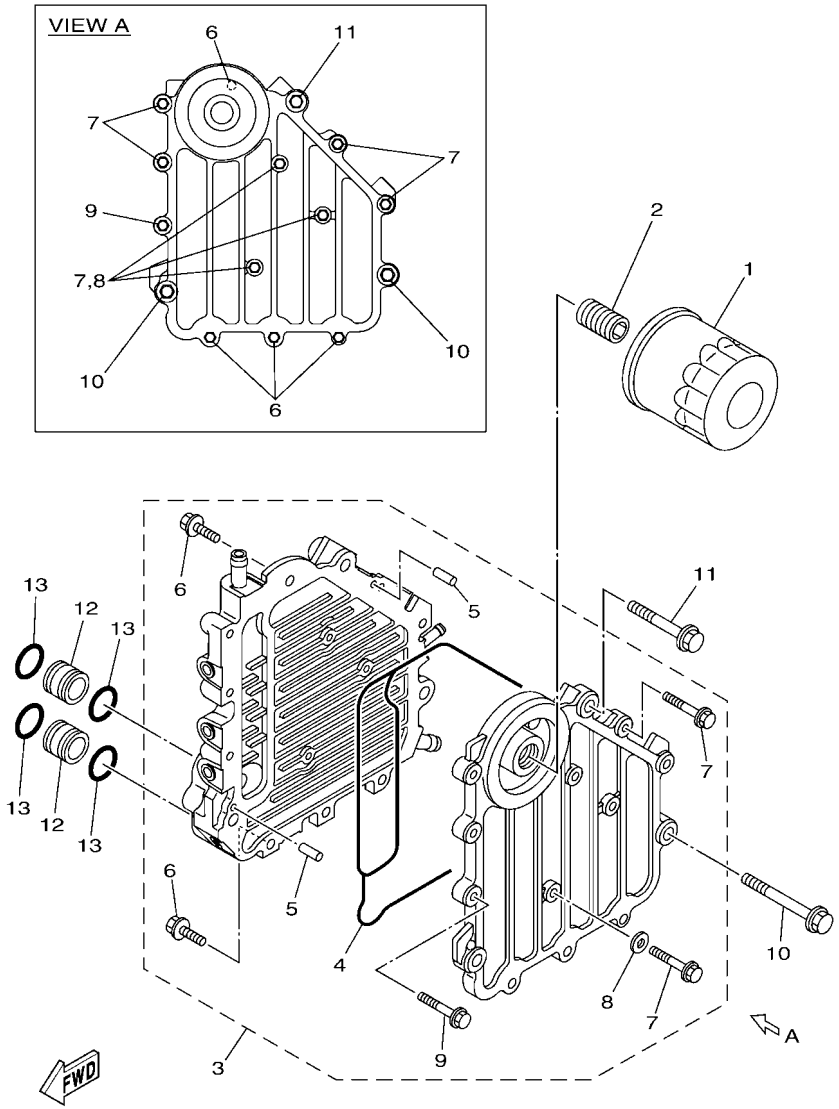

F4B1110-S110

FIG. 11 OIL COOLER

REF. NO.	PART NO.	DESCRIPTION	F5G9					REMARKS
1	69J–13440–04	ELEMENT ASSY, OIL CLEANER	1					
2	6S5–12858–00	BOLT, UNION	1					
3	6BH–13470–30	OIL COOLER ASSY	1					
4	6BH–13556–00	.GASKET, MANIFOLD	1					
5	93604–10M03	.PIN, DOWEL	2					
6	90105–06184	.BOLT, FLANGE	4					
7	90105–06185	.BOLT, FLANGE	7					
8	90430–06232	.GASKET	3					
9	90105–08054	.BOLT, FLANGE	1					
10	90105–08169	BOLT, FLANGE	2					
11	90105–08170	BOLT, FLANGE	1					
12	60E–13446–00	CONNECTOR	2					
13	93210–18322	O-RING	4					

FIG. 12 BREATHER OIL

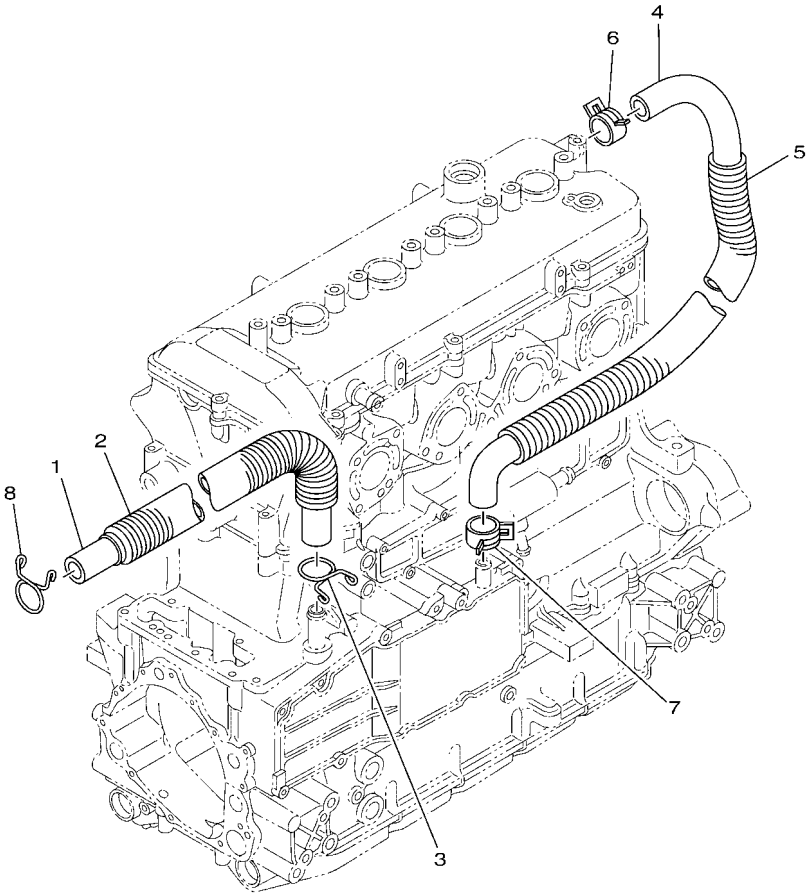

F3JS100-T120

REF. NO.	PART NO.	DESCRIPTION	F5G9					REMARKS
1	6S5–11166–10	PIPE, BREATHER 1	1					
2	90447–22015	TUBE (L410)	1					
3	90467–190A0	CLIP	1					
4	6S5–11167–10	PIPE, BREATHER 2	1					
5	90447–22016	TUBE (L490)	1					
6	90467–240A0	CLIP	1					
7	90467–200A3	CLIP	1					
8	90467–190A0	CLIP	1					

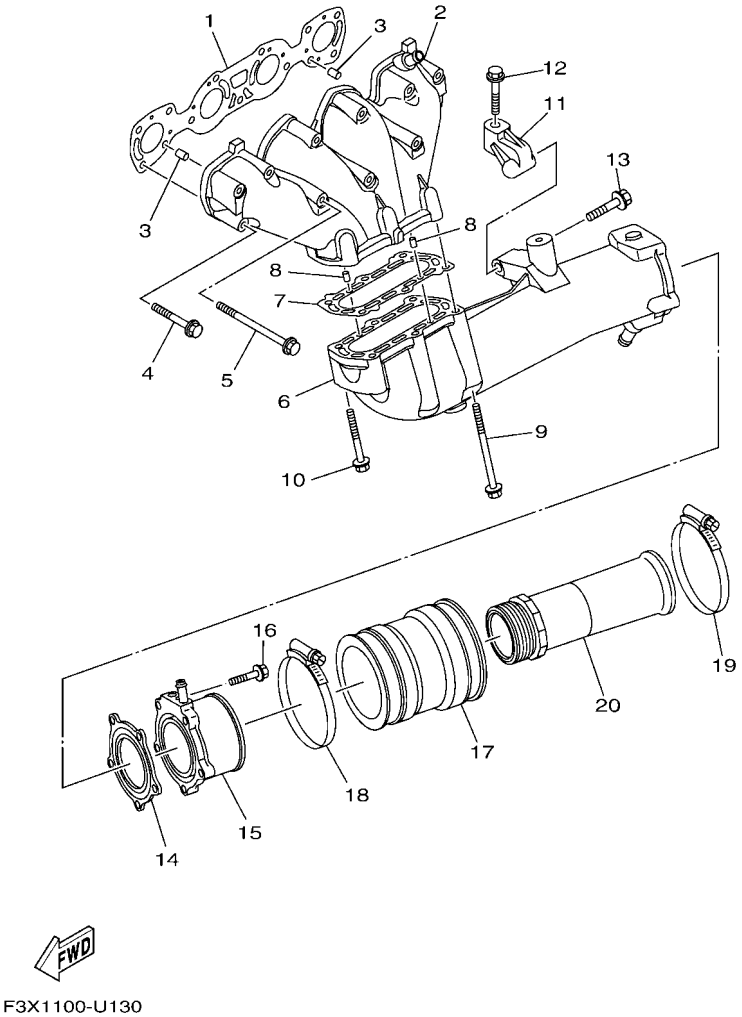

FIG. 13 EXHAUST 1

REF. NO.	PART NO.	DESCRIPTION	F5G9					REMARKS
1	6ET–14613–00	GASKET, EXHAUST PIPE	1					
2	6BH–14711–11	MUFFLER 1	1					
3	93608–16M16	PIN, DOWEL	2					
4	90119–08034	BOLT, WITH WASHER	8					
5	90119–08097	BOLT, WITH WASHER	3					
6	6BH–14721–11	MUFFLER 2	1					
7	6S5–14739–00	GASKET, MUFFLER DAMPER 1	1					
8	93606–12019	PIN, DOWEL	2					
9	90119–08097	BOLT, WITH WASHER	4					
10	90119–08034	BOLT, WITH WASHER	2					
11	6S5–14771–00	STAY, MUFFLER 1	1					
12	90119–08096	BOLT, WITH WASHER	1					
13	90119–10076	BOLT, WITH WASHER	1					
14	6BH–14749–00	GASKET, MUFFLER DAMPER 2	1					
15	6BH–14784–01	PIPE, TAIL	1					
16	95E34–08035	BOLT, FLANGE DEEP RECESS	5					
17	6S5–E4752–01	PIPE, OUTLET	1					
18	90450–99808	HOSE CLAMP ASSY	1					
19	90450–99809	HOSE CLAMP ASSY	1					
20	6CS–1475A–00	PIPE 1	1					

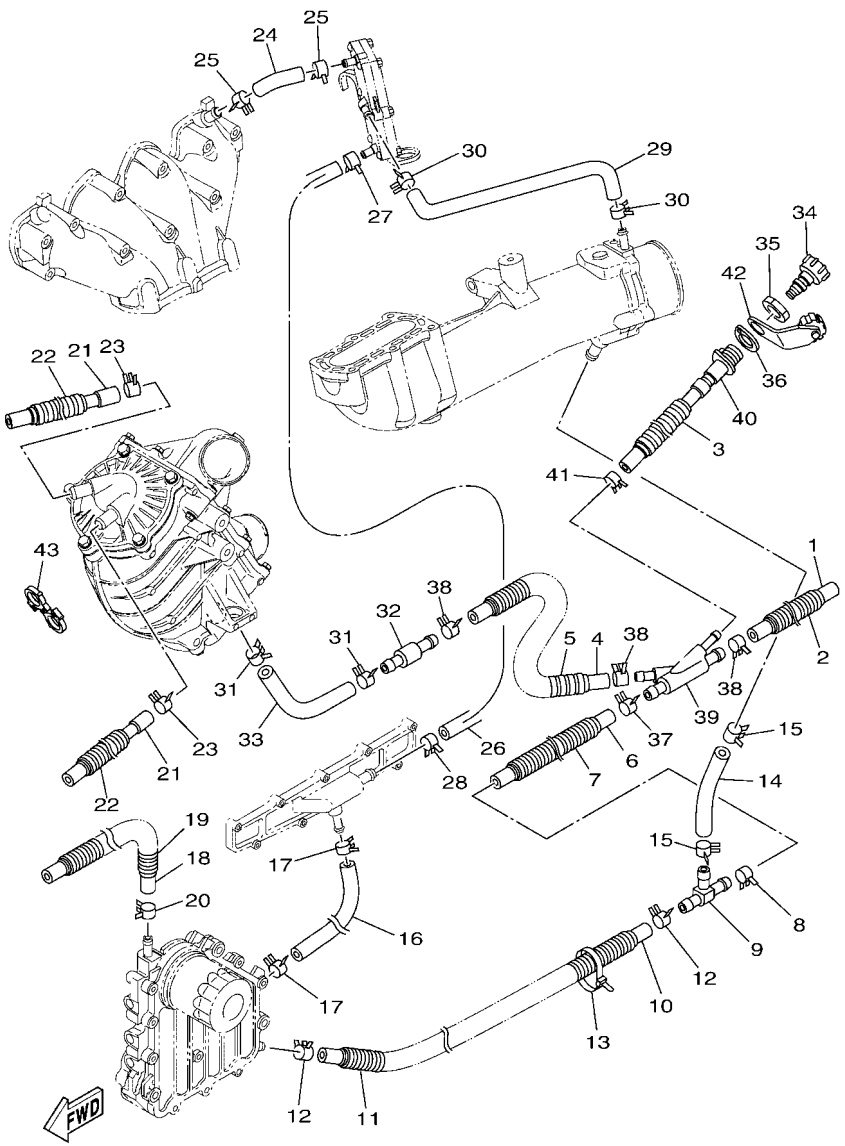

FIG. 14 EXHAUST 2

REF. NO.	PART NO.	DESCRIPTION	F5G9					REMARKS
1	F3X–U1273–00	HOSE	1					
2	90447–22801	TUBE (L200)	1					
3	90447–19801	TUBE (L485)	1					
4	90445–21807	HOSE (L970)	1					
5	90447–22802	TUBE (L850)	1					
6	6S5–1243E–01	HOSE 2	1					
7	F2T–U773D–00	TUBE	1					
8	90467–200A3	CLIP	1					
9	6BH–12584–00	JOINT, HOSE 3	1					
10	90445–18012	HOSE (L400)	1					
11	90447–19005	TUBE (L260)	1					
12	90467–160A0	CLIP	2					
13	90464–35132	CLAMP	1					
14	6S5–12589–01	HOSE 6	1					
15	90467–200A3	CLIP	2					
16	6BH–1244H–00	HOSE 5	1					
17	90467–141A3	CLIP	2					
18	6CS–12588–00	HOSE 5	1					
19	90447–19018	TUBE (L760)	1					
20	90467–160A0	CLIP	1					
21	6CS–12552–00	HOSE 8	2					
22	F3J–U773D–00	TUBE	2					
23	90467–170A4	CLIP	2					
24	6ET–12577–00	HOSE 2	1					
25	90467–160A0	CLIP	2					
26	6ET–12579–00	HOSE 4	1					
27	90467–160A0	CLIP	1					

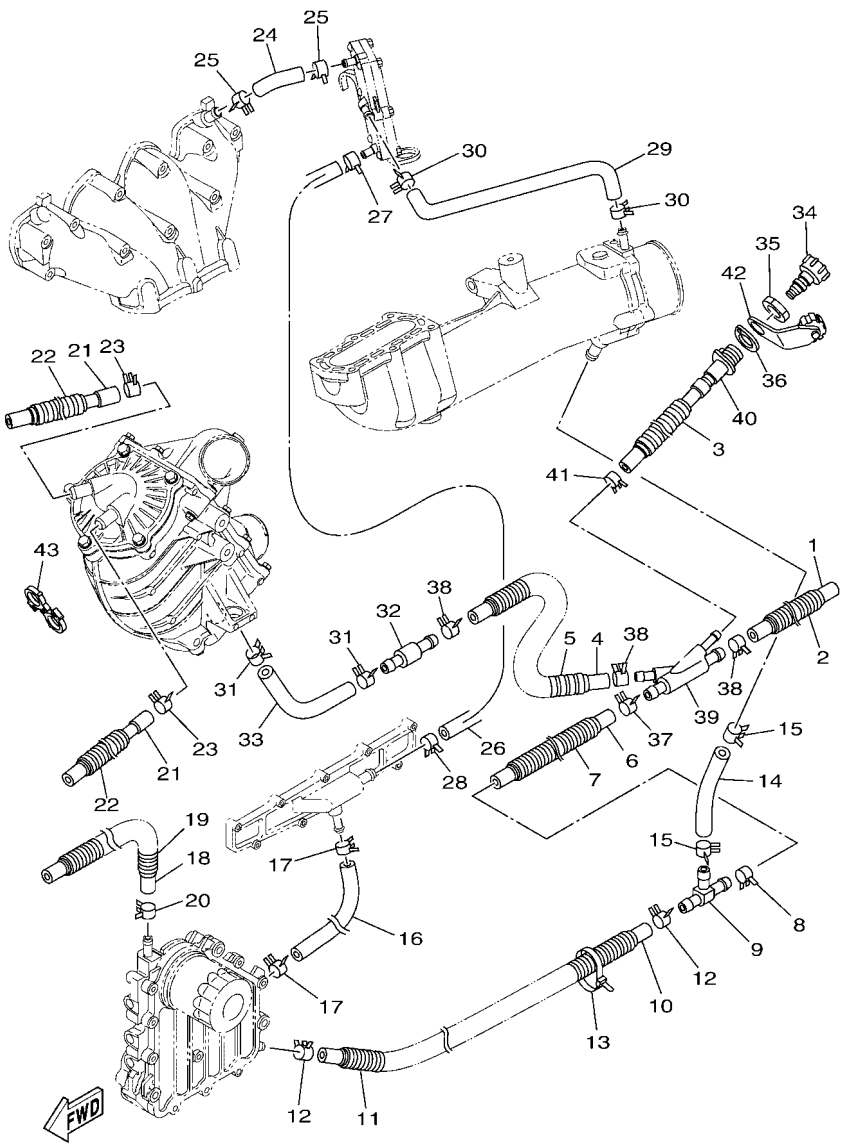

FIG. 14 EXHAUST 2

REF. NO.	PART NO.	DESCRIPTION	F5G9					REMARKS
28	90467–170A5	CLIP	1					
29	6ET–12576–01	HOSE 1	1					
30	90467–160A0	CLIP	2					
31	90467–200A3	CLIP	2					
32	6S5–12594–00	JOINT, HOSE 4	1					
33	6S5–12576–01	HOSE 1	1					
34	67X–E2590–00	CONDUCTION ASSY	1					FOR CAN
	67X–E2590–10	CONDUCTION ASSY	1					FOR EUR
35	EU0–61652–00	NUT	1					
36	F2S–U7525–01	PACKING	1					
37	90467–200A3	CLIP	1					
38	90467–200A3	CLIP	3					
39	6ET–12581–10	JOINT, HOSE 1	1					
40	64T–12580–00	JOINT ASSY	1					
41	90467–150A5	CLIP	1					
42	6EY–84385–00	CAP,1	1					
43	90464–24003	CLAMP	1					

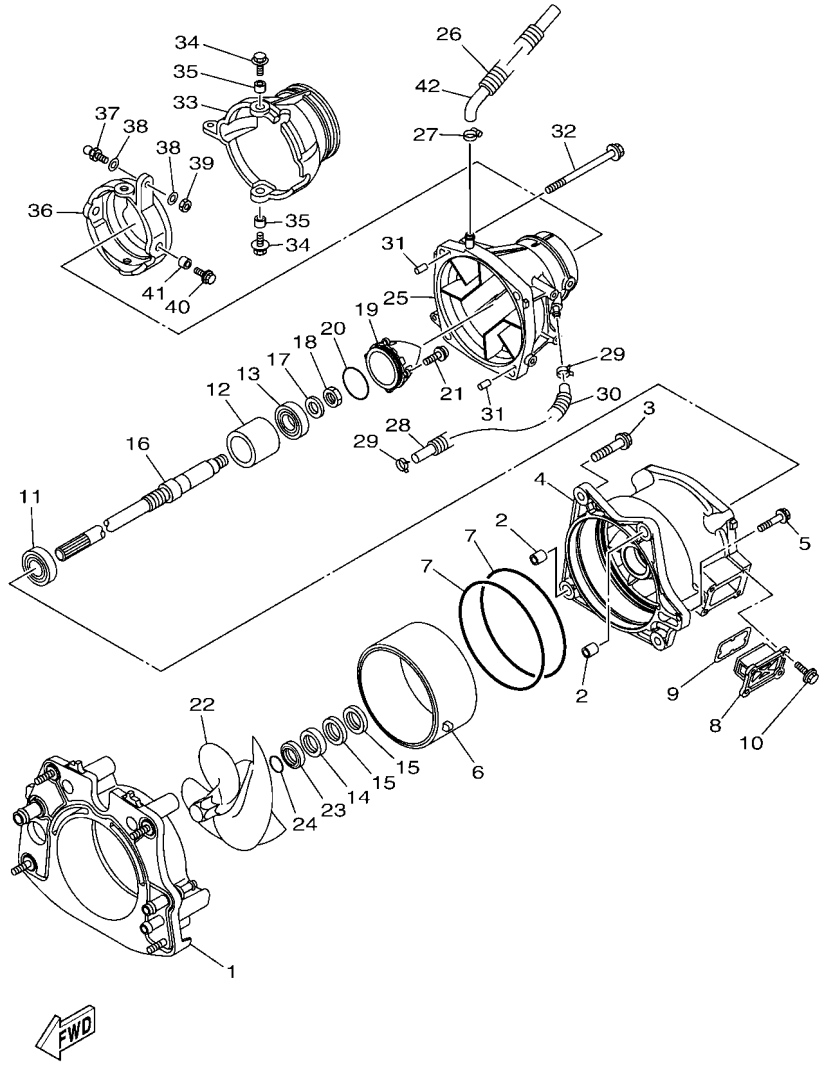

FIG. 15 JET UNIT 1

REF. NO.	PART NO.	DESCRIPTION	F5G9					REMARKS
1	6ET–G5831–20	PLATE, TRANSOM	1					
2	99590–14016	PIN, DOWEL	2					
3	90119–10810	BOLT, WITH WASHER	4					
4	6HL–R1312–00	HOUSING, IMPELLER	1					
5	90119–06893	BOLT, WITH WASHER	1					
6	6GN–R1337–00	SLEEVE, IMPELLER	1					
7	93211–70800	O-RING	2					
8	6GN–G6882–00	FILTER	1					
9	66V–42414–00	O-RING	1					
10	90119–06889	BOLT, WITH WASHER	4					
11	93306–206Y7	BEARING	1					
12	6CS–G5538–00	SPACER 1	1					
13	93306–355Y0	BEARING	1					
14	93102–31009	OIL SEAL	1					
15	93101–31001	OIL SEAL	2					
16	6ET–G5511–00	SHAFT, DRIVE	1					
17	92990–20600	WASHER	1					
18	95312–20700	NUT	1					
19	6ET–R1326–00	CAP	1					
20	93210–54010	O-RING	1					
21	90110–06822	BOLT, HEXAGON SOCKET HEAD	4					
22	6ET–R1321–10	IMPELLER	1					
23	6BH–R1348–00	SPACER	1					
24	93210–30611	O-RING	1					
25	6ET–R1318–00	NOZZLE	1					
26	6CN–U773D–01	TUBE	1					
27	90601–118UF	BAND, HOSE 18	1					

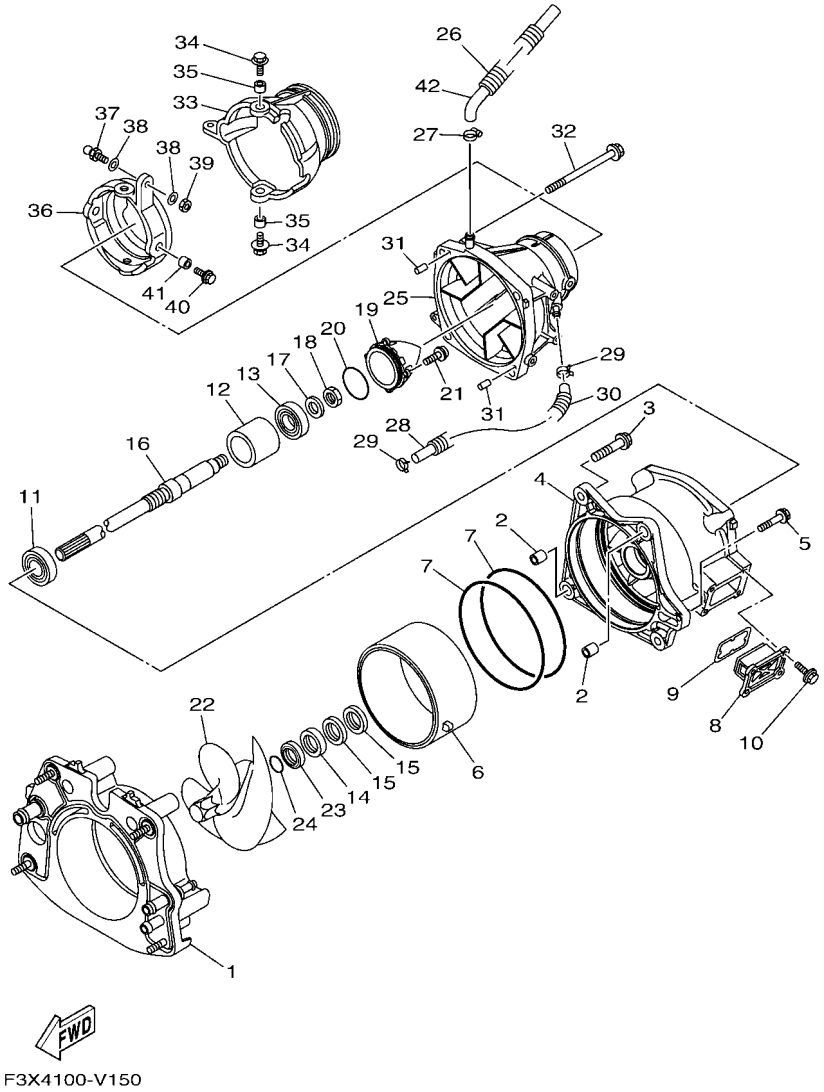

FIG. 15 JET UNIT 1

REF. NO.	PART NO.	DESCRIPTION	F5G9					REMARKS
28	6ET–U215E–00	HOSE	1					
29	90465–11829	CLAMP	2					
30	90447–15001	HOSE, WITH SPRING (L205)	1					
31	93606–12019	PIN, DOWEL	2					
32	90119–10810	BOLT, WITH WASHER	4					
33	6S5–R1313–01	NOZZLE, DEFLECTOR	1					
34	90119–08851	BOLT, WITH WASHER	2					
35	90387–08M06	COLLAR	2					
36	6AN–R1190–00	RING,TRIM	1					
37	6ET–U1461–10	STUD, JOINT BALL	1					
38	90201–068M4	WASHER, PLATE	2					
39	95380–06700	NUT	1					
40	90119–08851	BOLT, WITH WASHER	2					
41	90387–08M06	COLLAR	2					
42	6CS–U72M2–00	HOSE 1	1					

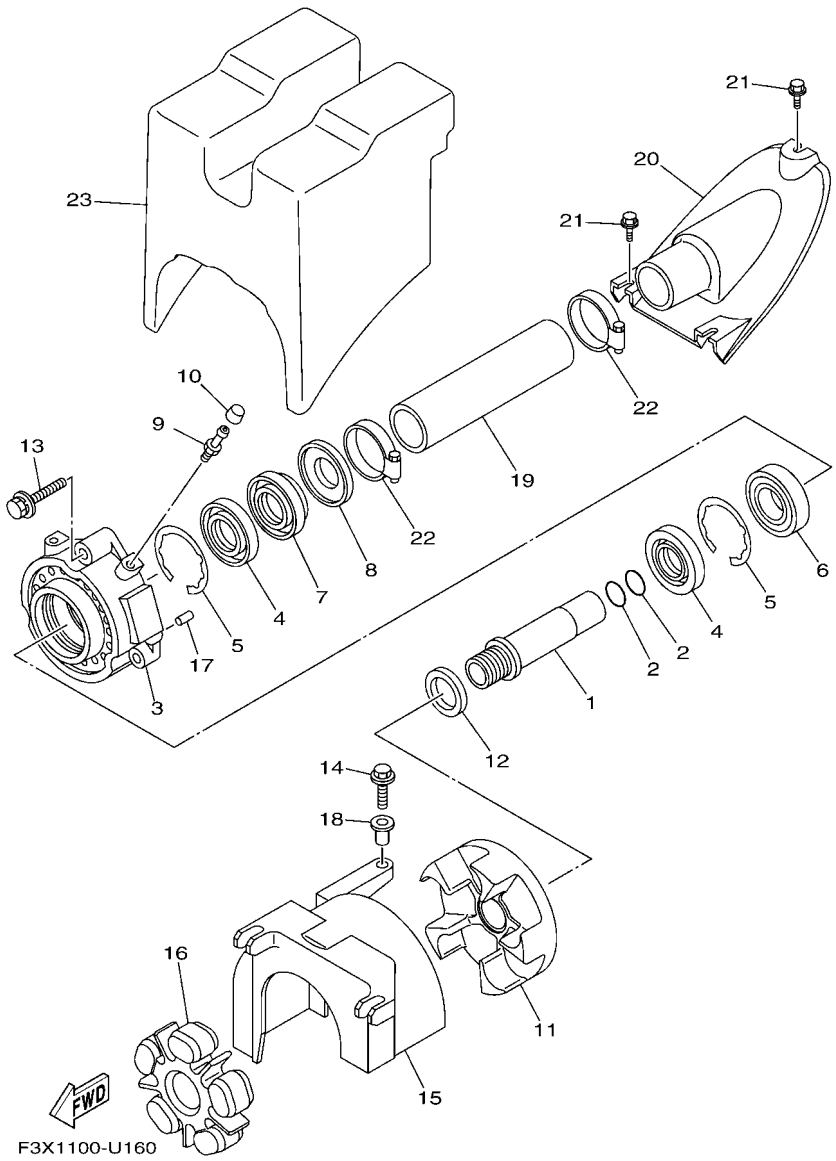

FIG. 16 JET UNIT 2

REF. NO.	PART NO.	DESCRIPTION	F5G9					REMARKS
1	6S5–R1323–00	SHAFT, COUPLER	1					
2	93210–22MF1	O-RING	2					
3	6S5–G5332–00	HOUSING, BEARING	1					
4	93102–29008	OIL SEAL	2					
5	99009–62500	CIRCLIP	2					
6	93306–206Y8	BEARING	1					
7	93102–29009	OIL SEAL	1					
8	6ET–45613–00	WASHER, THRUST	1					
9	93700–06M03	NIPPLE, GREASE	1					
10	663–45119–00	CAP, GREASE NIPPLE	1					
11	6S5–G5593–00	FLANGE, COUPLING 1	1					
12	6ET–E2289–00	WASHER	1					
13	90119–089UU	BOLT, WITH WASHER	3					
14	90119–06891	BOLT, WITH WASHER	1					
15	6S5–R1381–01	COVER	1					
16	6BH–4581J–01	RUBBER SHAFT COUPLING	1					
17	93606–12019	PIN, DOWEL	2					
18	90387–06289	COLLAR	1					
19	F2S–U883B–00	PIPE 1	1					
20	F2S–U883E–00	JOINT, PIPE	1					
21	90109–06832	BOLT	3					
22	90601–152U3	BAND, HOSE 52	2					
23	F3X–U892D–00	FLOTATION, STERN RH	1					

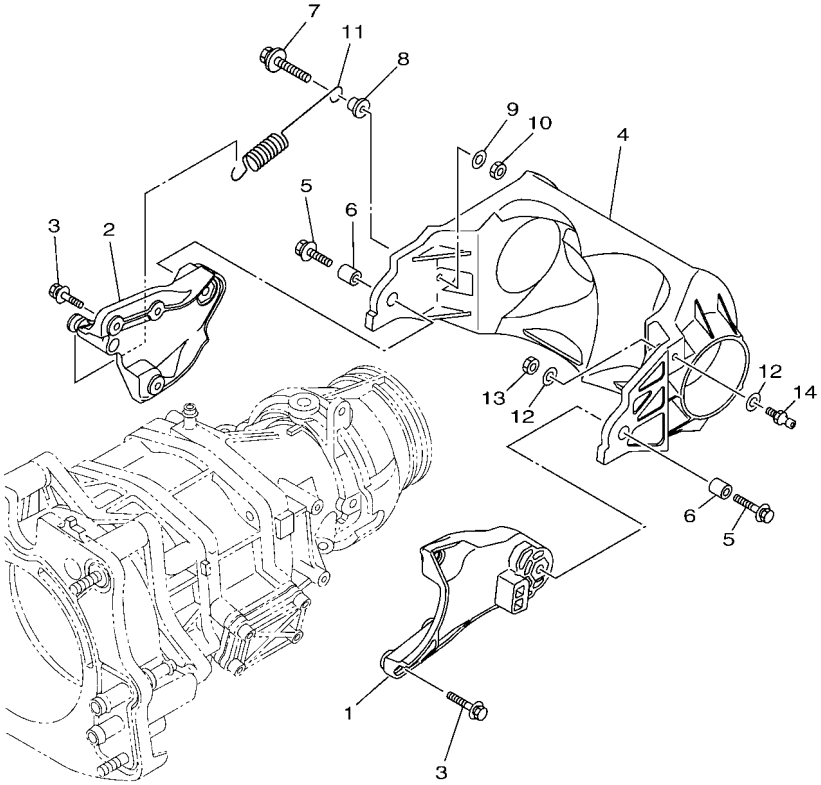

F2TS100-T160

FIG. 17 JET UNIT 3

REF. NO.	PART NO.	DESCRIPTION	F5G9					REMARKS
1	6ET–R1341–10	BRACKET 1	1					
2	6ET–R1342–10	BRACKET 2	1					
3	90119–06891	BOLT, WITH WASHER	6					
4	6ET–R1314–10	GATE, REVERSE	1					
5	90119–08840	BOLT, WITH WASHER	2					
6	90387–08M30	COLLAR	2					
7	90119–069UX	BOLT, WITH WASHER	1					
8	90387–06319	COLLAR	1					
9	90201–06801	WASHER, PLATE	1					
10	95380–06600	NUT, HEXAGON	1					
11	6S5–R2358–00	SPRING, RETAINER	1					
12	90201–06801	WASHER, PLATE	2					
13	95380–06600	NUT, HEXAGON	1					
14	6GA–U1461–10	STUD, JOINT BALL	1					

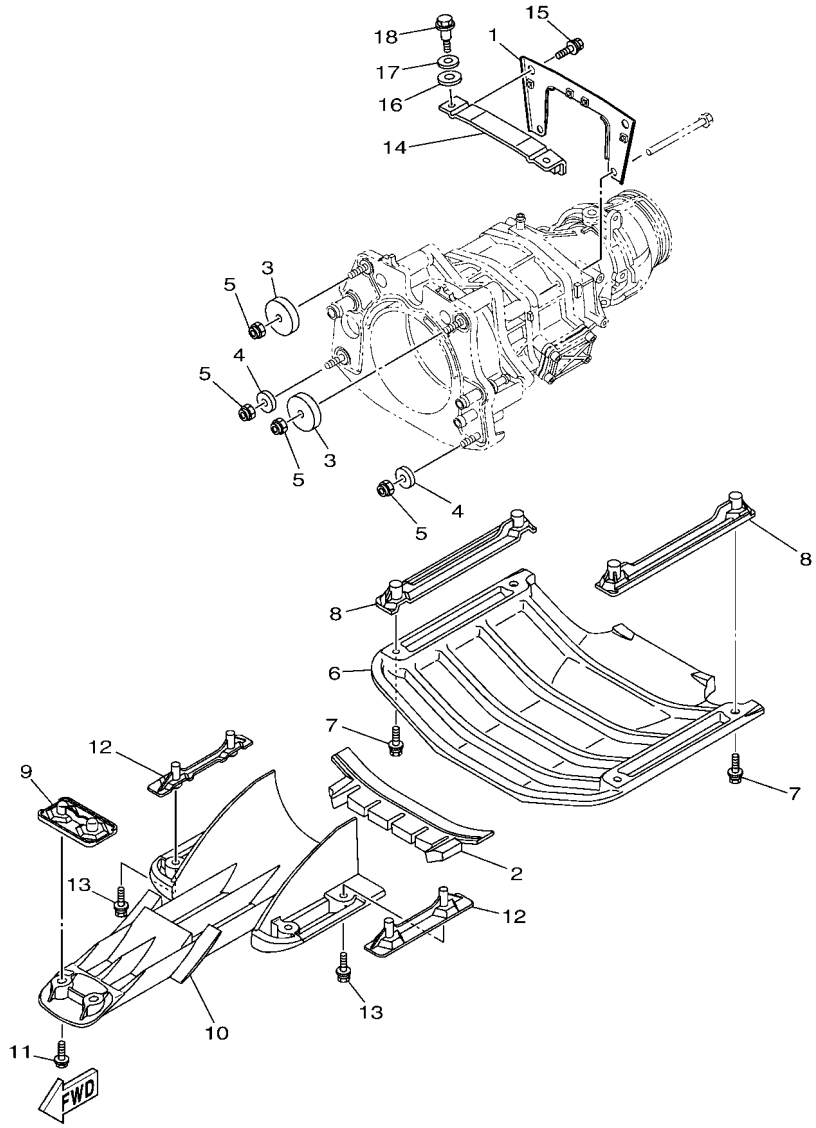

F5G1100-X180

FIG. 18 JET UNIT 4

REF. NO.	PART NO.	DESCRIPTION	F5G9					REMARKS
1	6EY–R1959–00	BRACKET	1					
2	F2S–U72C0–01	SPACER	1					
3	F1S–U725E–01	WASHER	2					
4	90201–10801	WASHER, PLATE	2					
5	9572R–10300	NUT, NYLON	4					
6	F5G–U273B–00	PLATE 2	1					
7	90119–08823	BOLT, WITH WASHER	4					
8	F1B–U8572–01	BRACKET 2	2					
9	F2S–U8577–00	BRACKET, 3	1					
10	6ET–R1333–00	SCREEN, INTAKE	1					
11	90119–08823	BOLT, WITH WASHER	2					
12	F1G–U8571–02	BRACKET 1	2					
13	90119–08823	BOLT, WITH WASHER	4					
14	F2C–U7557–01	BRACKET	1					
15	90119–089U7	BOLT, WITH WASHER	2					
16	90430–12002	GASKET	2					
17	92990–12200	WASHER, PLAIN	2					
18	90109–08041	BOLT	2					

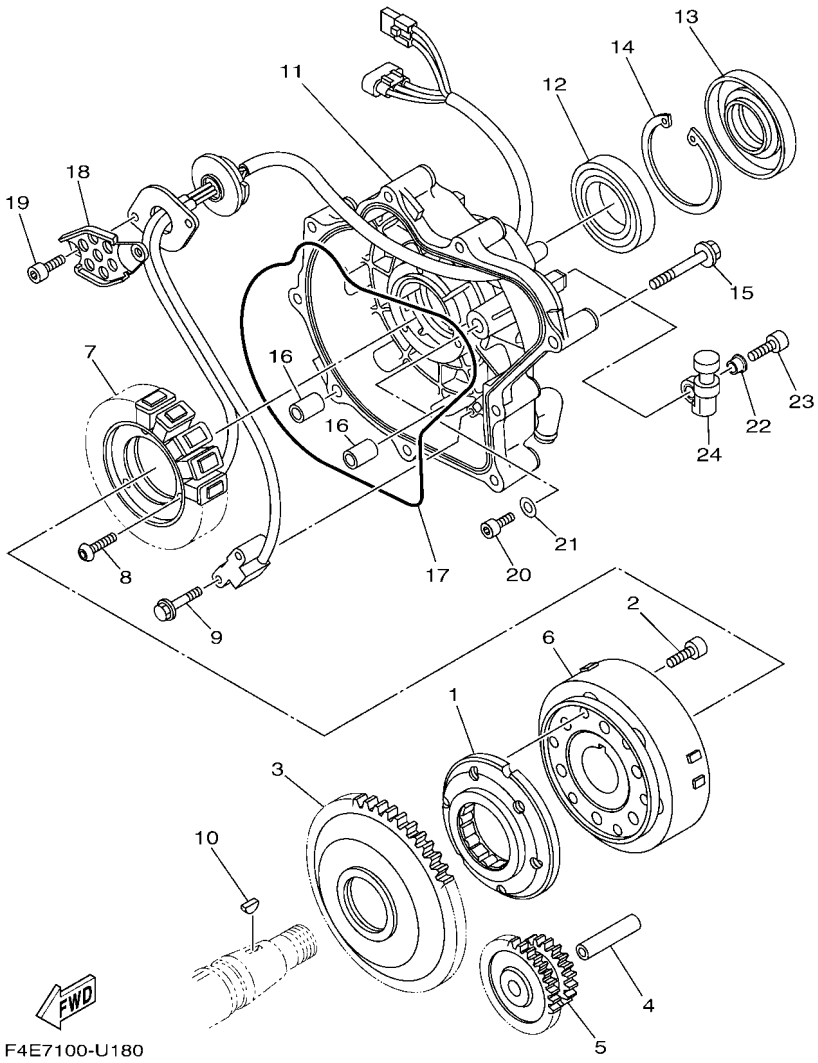

FIG. 19 GENERATOR

REF. NO.	PART NO.	DESCRIPTION	F5G9					REMARKS
1	6S5–15590–00	STARTER ONE-WAY ASSY	1					
2	90110–08212	BOLT, HEXAGON SOCKET HEAD	6					
3	6LE–15515–00	GEAR 3	1					
4	6S5–15521–00	SHAFT 1	1					
5	6S5–15517–00	GEAR, IDLER 2	1					
6	6S5–81450–01	ROTOR ASSY	1					
7	6ET–81410–00	STATOR ASSY	1					
8	90149–06229	SCREW	3					
9	97513–05514	BOLT, WITH WASHER	2					
10	90280–03047	KEY, WOODRUFF	1					
11	6S5–81337–31	COVER, FLYWHEEL	1					
12	93306–00809	BEARING	1					
13	6LE–81167–00	OIL SEAL	1					
14	99009–72500	CIRCLIP	1					
15	90105–08249	BOLT, FLANGE	9					
16	99530–10114	PIN, DOWEL	2					
17	6S5–81168–00	O-RING	1					
18	6S5–81328–00	CLAMP	1					
19	91317–06014	BOLT, HEXAGON SOCKET HEAD	2					
20	91317–05010	BOLT, HEXAGON SOCKET HEAD	1					
21	90201–052E8	WASHER, PLATE	1					
22	90387–06M05	COLLAR	2					
23	91380–06020	BOLT	2					
24	6S5–81364–11	GROMMET	2					

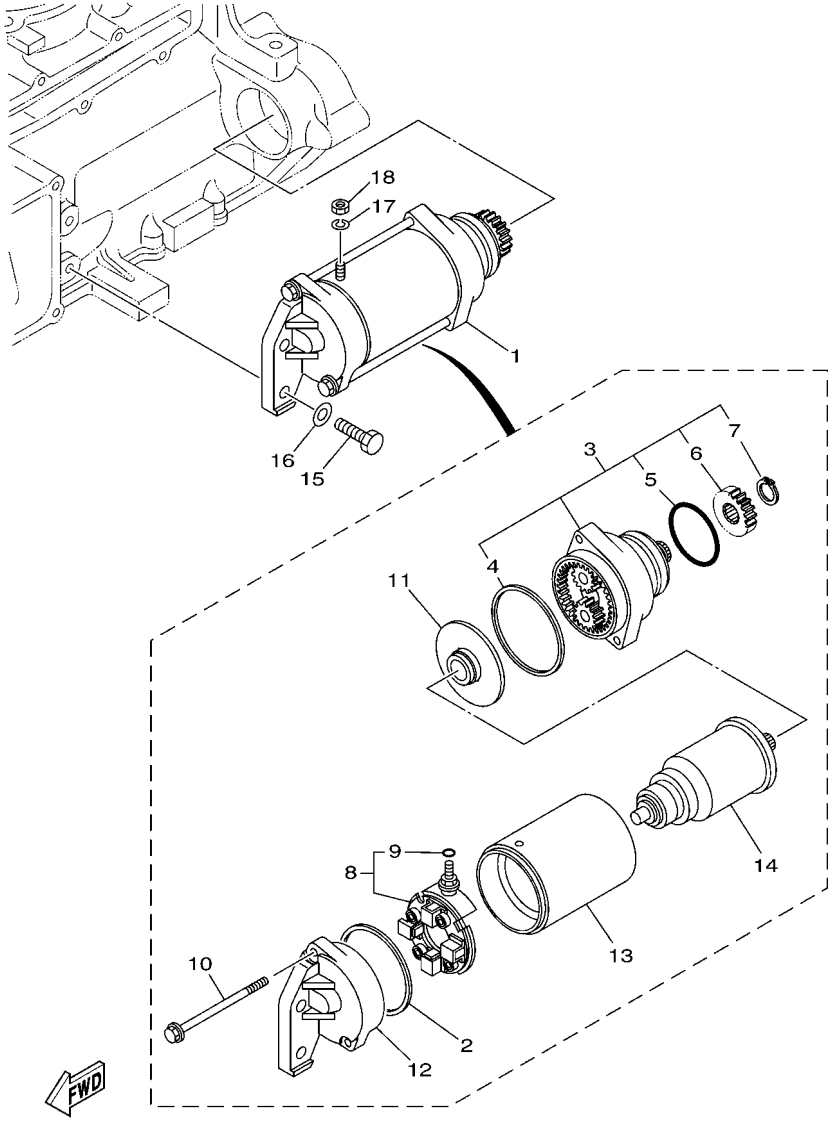

F1W1100-G200

FIG. 20 STARTING MOTOR

REF. NO.	PART NO.	DESCRIPTION	F5G9					REMARKS
1	6S5–81800–00	STARTING MOTOR ASSY	1					
2	11H–81844–00	.GASKET	1					
3	6S5–81830–00	.FRONT BRACKET ASSY	1					
4	4G0–81844–00	..GASKET	1					
5	1J7–81847–60	..O-RING	1					
6	5EL–15511–00	..GEAR, STARTING MOTOR	1					
7	93410–12003	..CIRCLIP	1					
8	6S5–81840–00	.BRUSH HOLDER ASSY	1					
9	3TB–81847–00	..O-RING	1					
10	6S5–81826–00	.BOLT	2					
11	5EL–81845–00	.PLATE	1					
12	6S5–81820–00	.REAR BRACKET ASSY	1					
13	6S5–81810–00	.STATOR ASSY	1					
14	5A8–81850–10	.ARMATURE ASSY	1					
15	97013–08030	BOLT	2					
16	92903–08600	WASHER, PLATE	2					
17	92990–06100	WASHER, SPRING	1					
18	95380–06700	NUT	1					

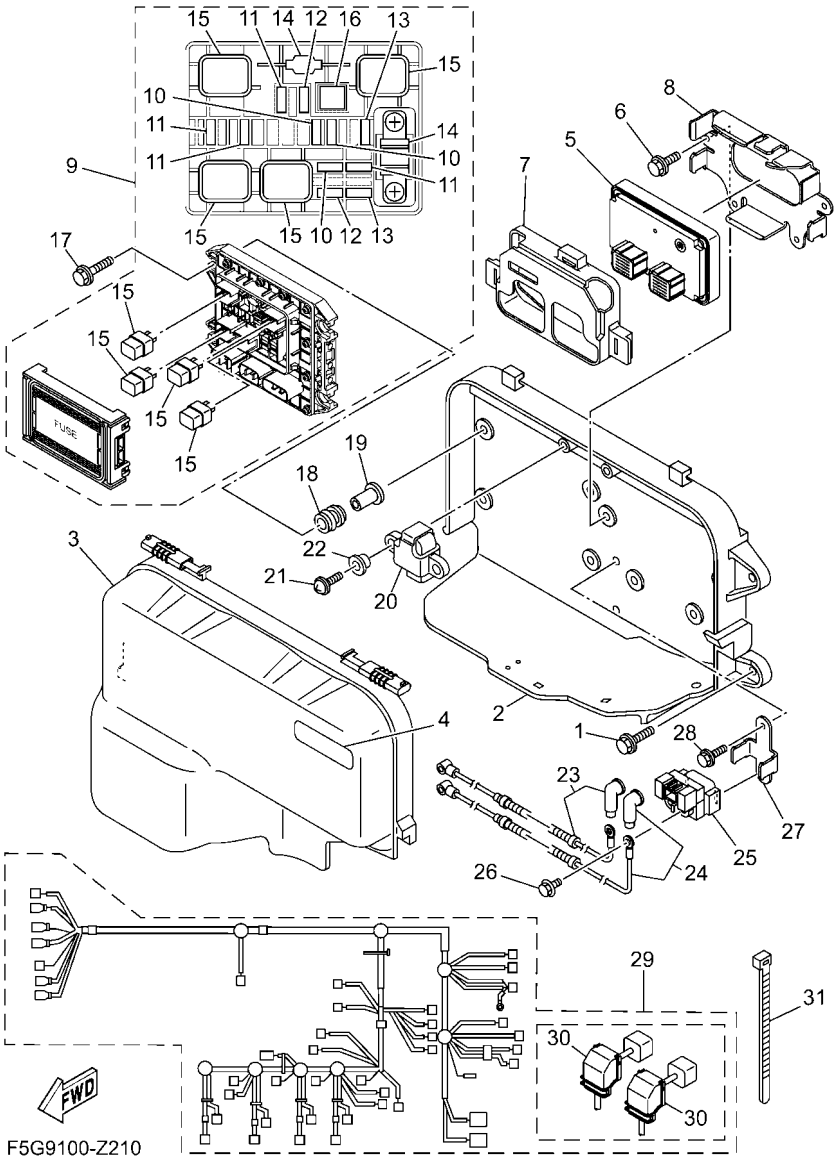

FIG. 21 ELECTRICAL 1

REF. NO.	PART NO.	DESCRIPTION	F5G9					REMARKS
1	90119–089UT	BOLT, WITH WASHER	4					
2	6CS–81845–11	PLATE	1					
3	6S5–81942–21	COVER	1					
4	60E–83627–00	LABEL, CAUTION 7	1					
5	6HL–8591A–10	ENGINE CONTROL UNIT ASSY	1					
6	95814–06012	BOLT, FLANGE	4					
7	6EY–8591S–00	GROMMET, ECU	1					
8	6ET–81948–00	BRACKET	1					
9	6EX–82170–02	FUSE BOX ASSY	1					
10	67F–82151–30	.FUSE (3A)	3					
11	67F–82151–40	.FUSE (10A)	4					
12	67F–82151–00	.FUSE (20A)	2					
13	67F–82151–10	.FUSE (30A)	2					
14	6EX–82151–00	.FUSE (50A)	2					
15	6EX–8195A–00	.RELAY ASSY	4					
16	6EX–2812A–00	.PULLER, FUSE	1					
17	90119–06311	BOLT, WITH WASHER	4					
18	6A0–82317–01	DAMPER, IGNITION COIL	4					
19	90387–06119	COLLAR	4					
20	6ET–82576–00	SENSOR, LEAN ANGLE	1					
21	97780–60025	SCREW, TAPPING	2					
22	90387–06M05	COLLAR	2					
23	6JP–82115–00	WIRE, PLUS LEAD	1					
24	6CS–82117–00	WIRE, LEAD	1					
25	1B7–81940–00	STARTER RELAY ASSY (2768102-A)	1					
26	97E95–06612	BOLT, HEXAGON W/W DEEP RECESS	2					
27	6CS–81953–00	STAY, RELAY	1					

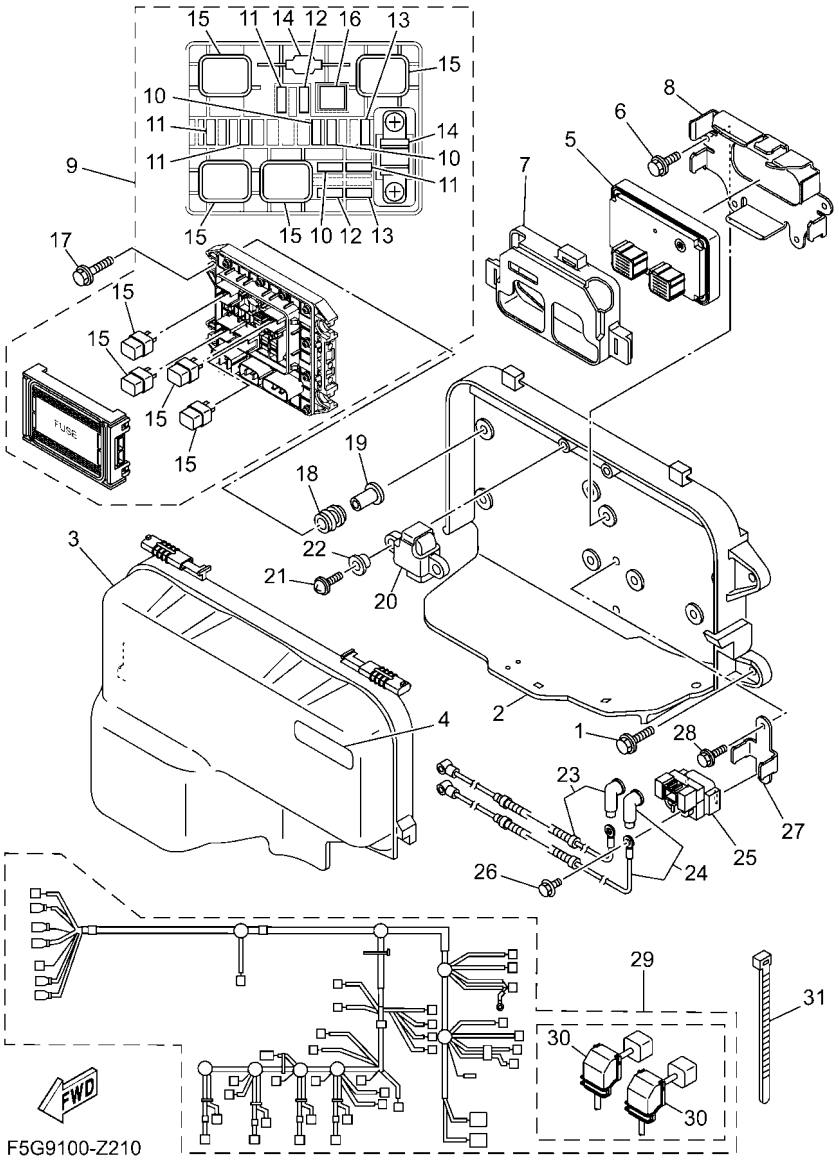

FIG. 21 ELECTRICAL 1

REF. NO.	PART NO.	DESCRIPTION	F5G9					REMARKS
28	95814–06012	BOLT, FLANGE	2					
29	6HL–8259L–20	WIRE HARNESS ASSY 1	1					
30	6EM–82599–00	.COVER, CONNECTOR	2					
31	90465–14M66	CLAMP	1					

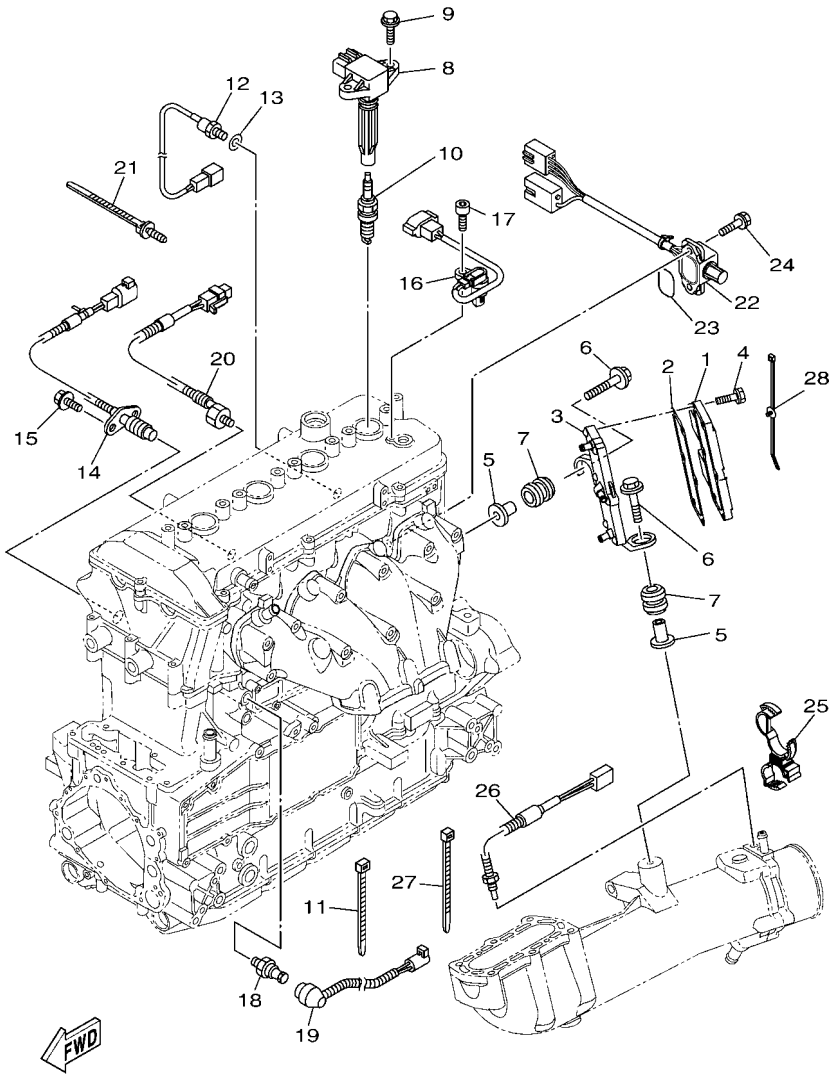

F3P3100-T220

FIG. 22 ELECTRICAL 2

REF. NO.	PART NO.	DESCRIPTION	F5G9					REMARKS
1	6EK–81960–10	RECTIFIER & REGULATOR ASSY	1					
2	6ET–81975–01	PLATE, RECTIFIER FITTING	1					
3	6ET–81972–00	COVER, RECTIFIER	1					
4	90119–06MA4	BOLT, WITH WASHER	6					
5	90387–08M37	COLLAR	2					
6	90119–08187	BOLT, WITH WASHER	2					
7	90480–22M15	GROMMET	2					
8	6S5–82310–10	IGNITION COIL ASSY	4					
9	90105–06903	BOLT, FLANGE	8					
10	94702–00435	PLUG, SPARK (NGK LFR7A)	4					
11	90464–35132	CLAMP	9					
12	61A–85790–01	THERMOSENSOR ASSY	1					
13	92990–10600	WASHER, PLATE	1					
14	6CR–82560–00	THERMO SWITCH ASSY	1					
15	97E95–06516	BOLT, HEXAGON W/W DEEP RECESS	2					
16	60E–85896–02	SENSOR, CAM POSITION	1					
17	91380–06016	BOLT	1					
18	68V–82504–00	OIL PRESSURE SWITCH ASSY	1					
19	6S5–81315–01	LEAD WIRE ASSY	1					
20	6AN–85780–01	SENSOR, KNOCK	1					
21	90464–31001	CLAMP	1					
22	6CS–8273J–11	EARTH PLATE COMP.	1					
23	93210–32172	O-RING	1					
24	90119–06MA3	BOLT, WITH WASHER	2					
25	90464–20008	CLAMP	1					
26	6AA–85790–00	THERMOSENSOR ASSY	1					
27	90464–31001	CLAMP	1					

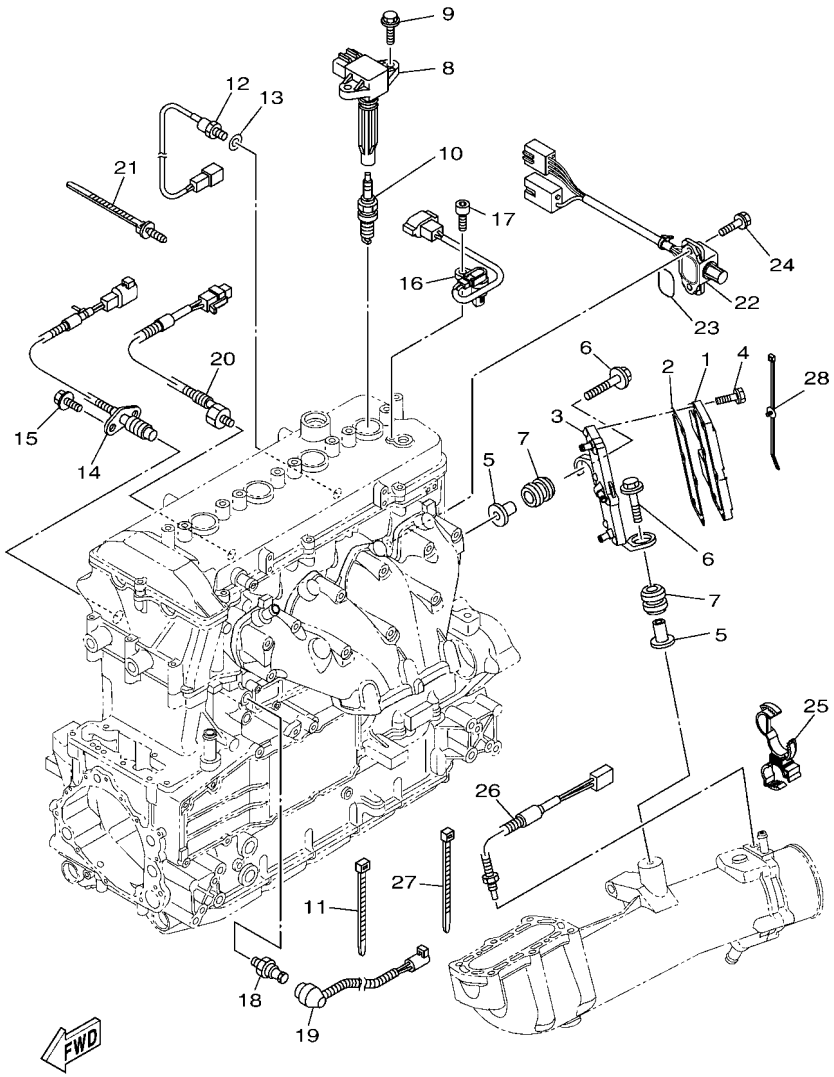

F3P3100-T220

FIG. 22 ELECTRICAL 2

REF. NO.	PART NO.	DESCRIPTION	F5G9					REMARKS
28	90464–31002	CLAMP	1					

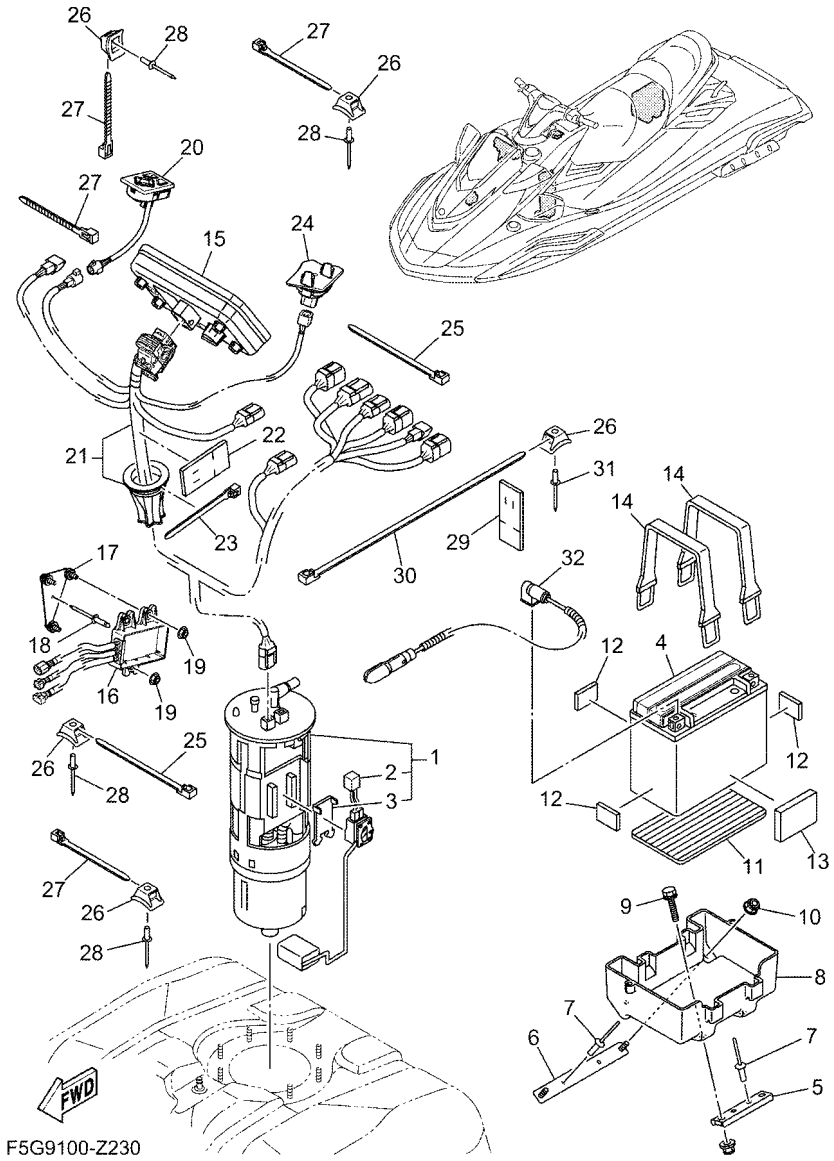

FIG. 23 ELECTRICAL 3

REF. NO.	PART NO.	DESCRIPTION	F5G9					REMARKS
1	6S5–13907–05	FUEL PUMP COMP.	1					
2	6S5–682E0–10	.FUEL SENDER ASSY	1					
3	60E–82556–10	.DAMPER, STOPPER	1					
4	5FU–H2100–20	BATTERY ASSY (YUASA YTX20L-BS)	1					
5	F2S–U8592–00	PLATE, BASE 2	1					
6	F2S–U8593–00	PLATE, BASE 3	1					
7	90267–489U1	RIVET,BLIND	4					
8	F2S–U8211–00	CASE, BATTERY	1					
9	90119–06832	BOLT, WITH WASHER	2					
10	F2N–U142L–00	NUT, LOCK	2					
11	F1S–U8221–00	PAD, BATTERY	1					
12	EU0–U8221–31	PAD, BATTERY	3					
13	F7K–U1743–00	PACKING	1					
14	F4P–U821D–00	BAND, BATTERY 1	2					
15	F7K–U820A–00	METER ASSY	1					
16	F5G–HA260–00	CONVERTING UNIT	1					
17	F5G–U826C–00	BRACKET	1					
18	90267–489U1	RIVET,BLIND	1					
19	F2N–U142L–00	NUT, LOCK	3					
20	F5G–U8090–01	SWITCH ASSY.	1					
21	F5G–U0891–00	WIRE HARNESS,1	1					
22	GJ1–U7578–22	PACKING, HOSE 2	1					
23	90464–32801	CLAMP	1					
24	F5G–U827A–00	MIC ASSY	1					
25	90464–32801	CLAMP	4					
26	F1W–U828M–00	BASE, CLAMP	9					
27	90464–32801	CLAMP	6					

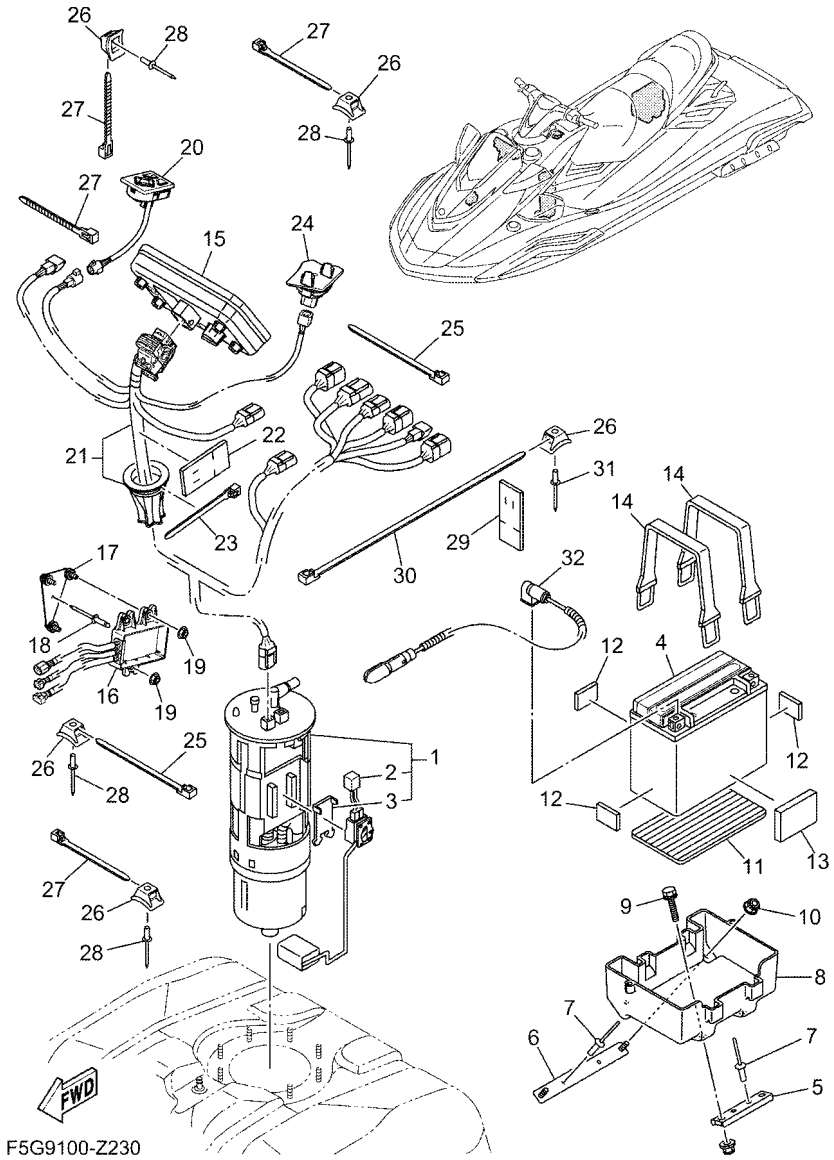

FIG. 23 ELECTRICAL 3

REF. NO.	PART NO.	DESCRIPTION	F5G9					REMARKS
28	90267–48806	RIVET, BLIND	6					
29	GJ1–U7578–22	PACKING, HOSE 2	2					
30	F5G–U4256–00	CLAMP	3					
31	90267–48806	RIVET, BLIND	3					
32	6JP–82116–00	WIRE, MINUS LEAD	1					

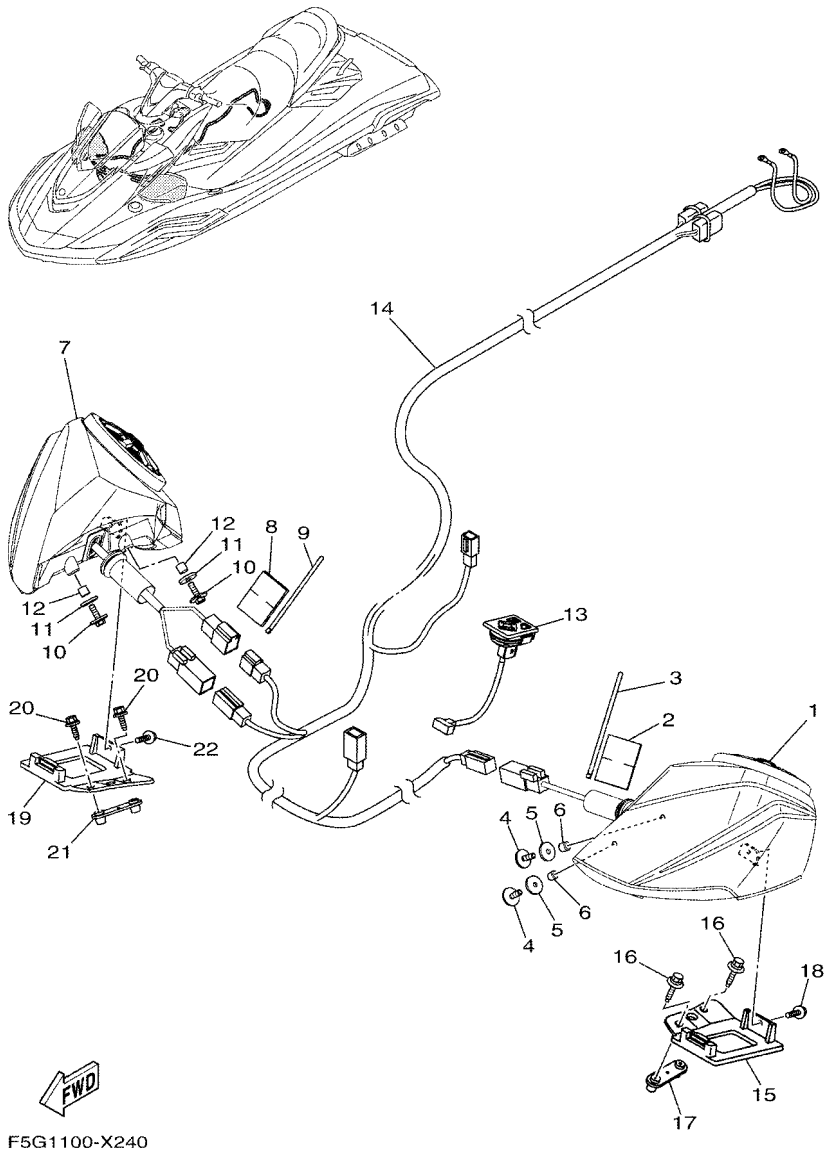

FIG. 24 ELECTRICAL 4

REF. NO.	PART NO.	DESCRIPTION	F5G9					REMARKS
1	F5G–U8102–00	SPEAKER ASSY 1	1					
2	GJ1–U7578–12	PACKING, HOSE 2	1					
3	90464–32801	CLAMP	1					
4	F5G–U1369–00	BOLT	2					
5	F5G–U143K–00	PACKING	2					
6	F5G–U0229–00	COLLAR	2					
7	F5G–U8103–00	SPEAKER ASSY 2	1					
8	GJ1–U7578–12	PACKING, HOSE 2	1					
9	90464–32801	CLAMP	1					
10	F5G–U1369–00	BOLT	2					
11	F5G–U143K–00	PACKING	2					
12	F5G–U0229–00	COLLAR	2					
13	F5G–U81AJ–01	CONTROLLER, AUDIO	1					
14	F5G–U8275–01	WIRE, HARNESS	1					
15	F5G–UE6GA–01	BRACKET, SPEAKER 1	1					
16	F5G–U1369–00	BOLT	2					
17	F5G–U0392–00	BRACKET	1					
18	90119–06882	BOLT, WITH WASHER	1					
19	F5G–UE6GA–11	BRACKET, SPEAKER 1	1					
20	F5G–U1369–00	BOLT	2					
21	F5G–U0392–10	BRACKET	1					
22	90119–06882	BOLT, WITH WASHER	1					

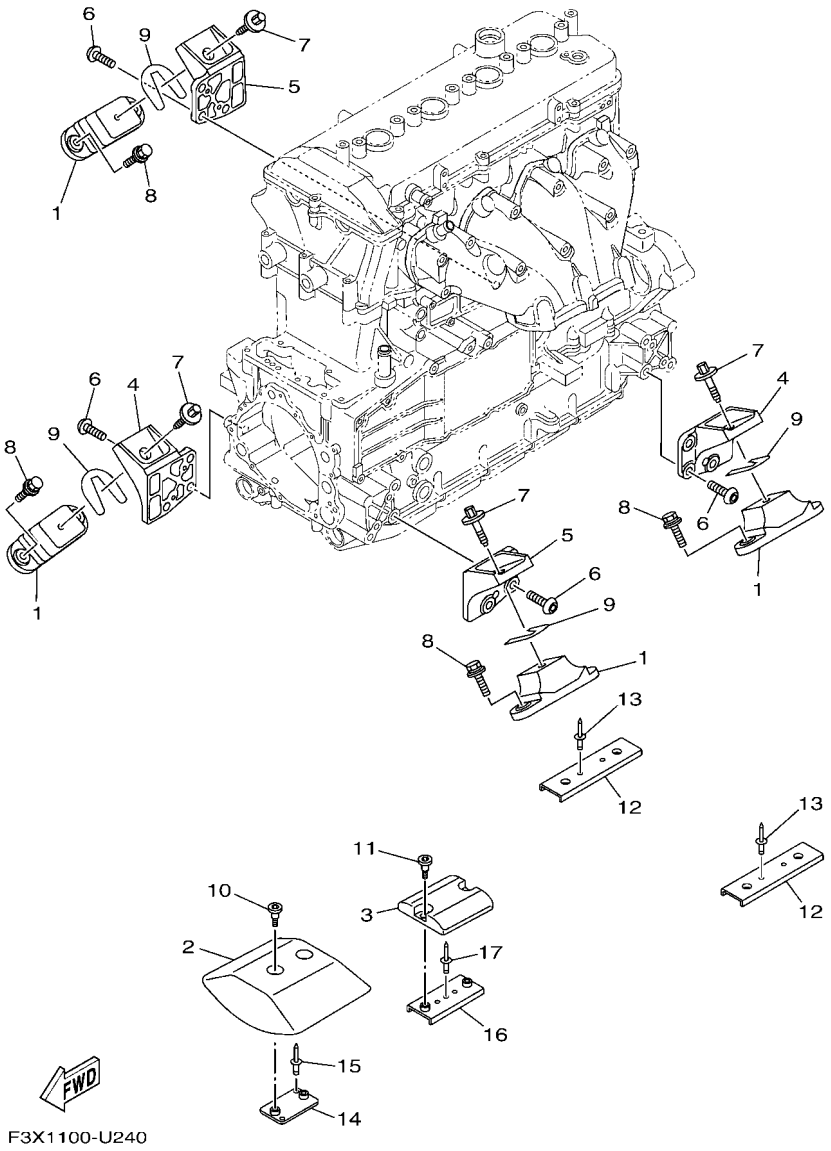

FIG. 25 ENGINE MOUNT

REF. NO.	PART NO.	DESCRIPTION	F5G9					REMARKS
1	67X–44517–10	MOUNT RUBBER	4					
2	6HL–G4532–00	STOPPER, UPPER MOUNT	1					
3	6BH–G4574–00	STOPPER, LOWER MOUNT RUBBER	1					
4	6BH–41661–00–94	BRACKET 1	2					
5	6BH–41662–00–94	BRACKET 2	2					
6	90149–10068	SCREW	12					
7	90119–08859	BOLT, WITH WASHER	4					
8	90119–08823	BOLT, WITH WASHER	8					
9	EU0–U7354–00–01	SHIM (T=0.1)	10					UN
	EU0–U7354–00–03	SHIM (T=0.3)	10					UN
	EU0–U7354–00–05	SHIM (T=0.5)	10					UN
	EU0–U7354–00–10	SHIM (T=1.0)	10					UN
	EU0–U7354–00–20	SHIM (T=2.0)	10					UN
10	90109–06874	BOLT	2					
11	90109–06875	BOLT	2					
12	F2S–U732B–00	PLATE	2					
13	90267–489U2	RIVET, BLIND	4					
14	F2S–U732B–10	PLATE	1					
15	90267–489U2	RIVET, BLIND	2					
16	F2M–U732B–00	PLATE	1					
17	90267–489U2	RIVET, BLIND	1					

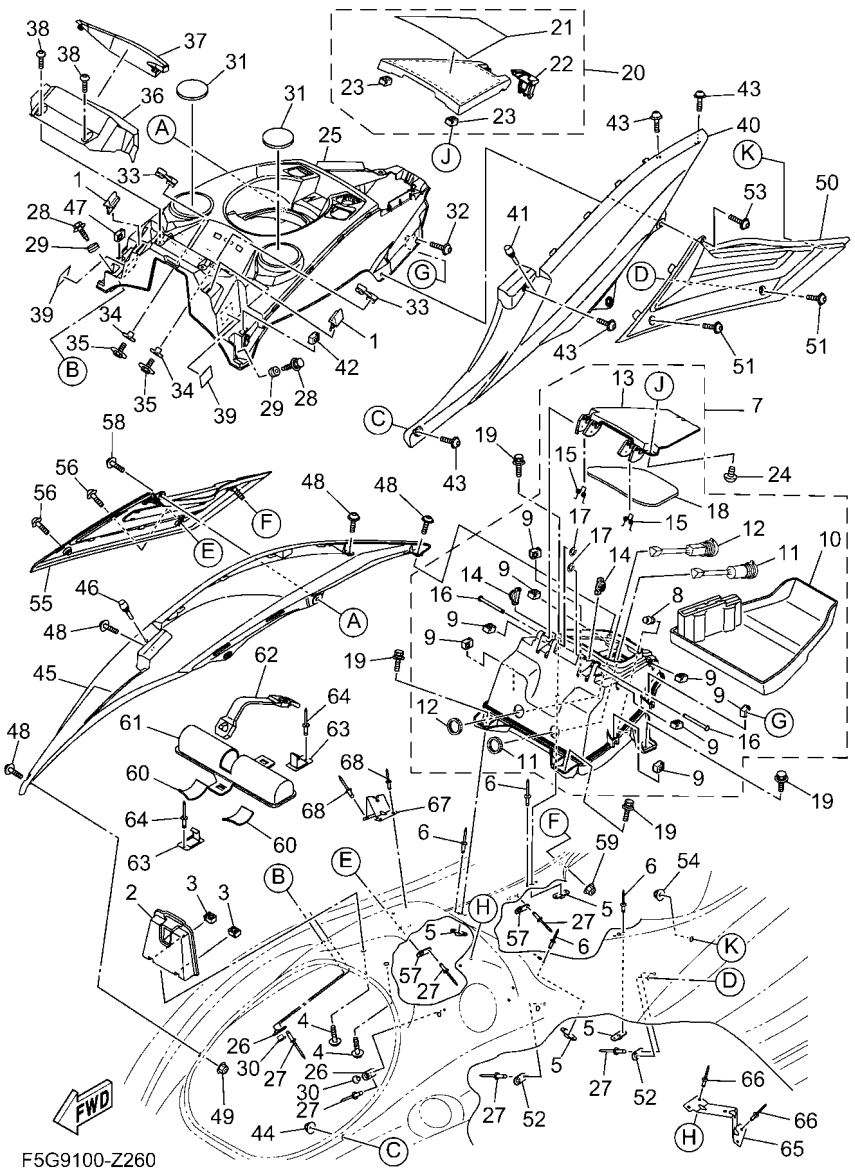

FIG. 26 ENGINE HATCH 1

REF. NO.	PART NO.	DESCRIPTION	F5G9					REMARKS
1	F1K–U266C–10	PACKING 4	2					
2	F5G–U517F–02	HOOK,LID LOCK	1					
3	F3X–U517E–00	NUT	2					
4	90119–06880	BOLT, WITH WASHER	2					
5	F2C–U826C–00	BRACKET	4					
6	F4P–U516R–01	RIVET 1	8					
7	F5G–U1708–01	GLOVE BOX HATCH ASSY	1					
8	F3X–U2723–00	.SEAL	1					
9	F3X–U517E–00	.NUT	8					
10	F5G–U591L–00	.INNER, CASE	1					
11	F5G–H254B–00	.TERMINAL COMP.	1					
12	F5G–H21E1–00	.PLUG, USB	1					
13	F5G–U2811–01	.HING,HATCH 1	1					
14	F5G–U0210–00	.GEAR ASSY	2					
15	F5G–U1395–01	.SPRING, TORSION	2					
16	F5G–U517R–00	.PIN, HINGE	2					
17	F5G–U515C–00	.E-RING	2					
18	F5G–U519D–01	.PACKING CASE	1					
19	90119–08822	BOLT, WITH WASHER	4					
20	F5G–U4705–01	GLOVE BOX COVER ASSY	1					
21	F5G–U41B1–00	.LABEL, WARNING UNIFORM 1	1					
22	F4N–U2875–00	.LOCK	1					
23	F3X–U517E–00	.NUT	2					
24	90111–06873	BOLT, HEXAGON SOCKET BUTTON	2					
25	F5G–U5554–02	COVER, CENTER	1					
26	F2X–U5175–00	PLATE, FIX	2					
27	90267–489U1	RIVET,BLIND	6					

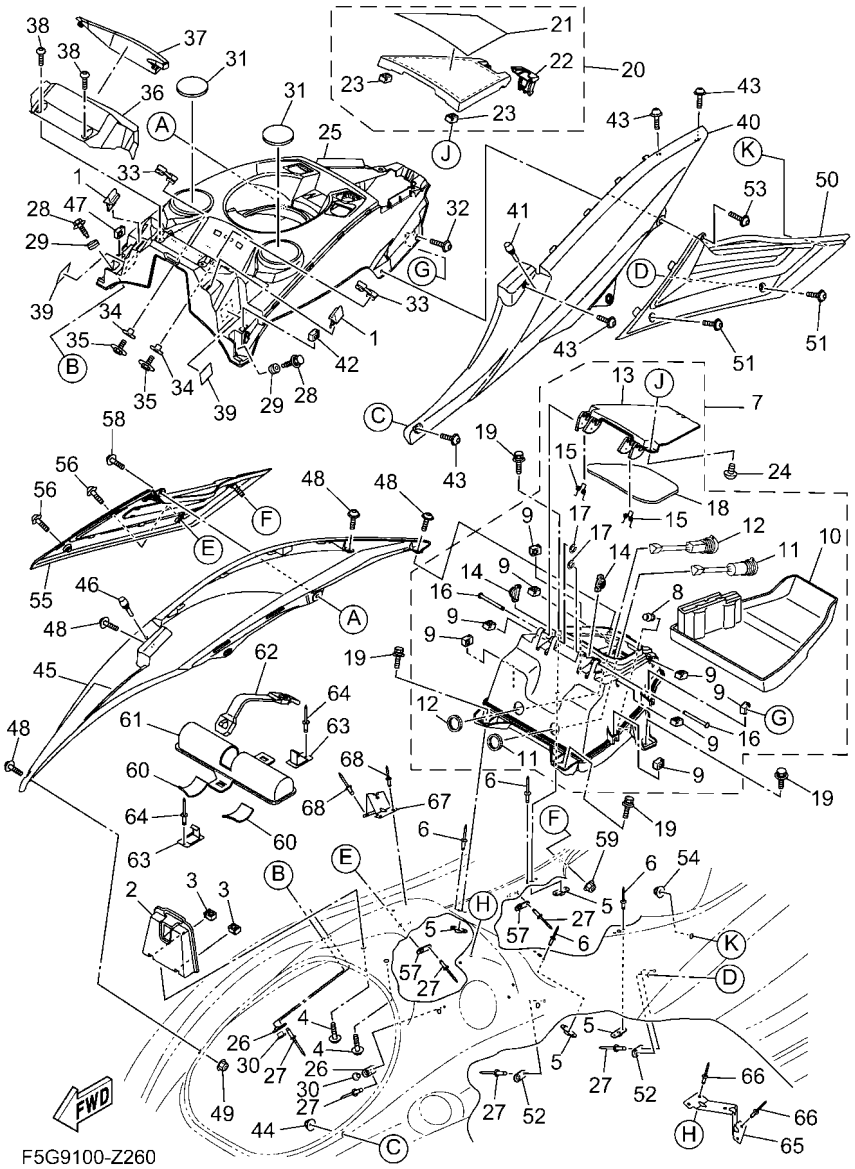

FIG. 26 ENGINE HATCH 1

REF. NO.	PART NO.	DESCRIPTION	F5G9					REMARKS
28	90119–06832	BOLT, WITH WASHER	2					
29	F5G–U828E–00	DAMPER 1	2					
30	F5G–U2119–00	COLLAR	2					
31	F5G–U3844–00	MAT	2					
32	F5G–U6829–09	SCREW	2					
33	F3X–U1338–00	GROMMET	2					
34	F3X–U151R–00	COLLAR	4					
35	F3X–U1355–00	BOLT	4					
36	F5G–U8262–01	COVER METER	1					
37	F5G–U826F–01	ORNAMENT, METER	1					
38	F2S–U13C1–00	SCREW	4					
39	F2C–U1743–00	PACKING	2					
40	F5G–U377B–01–P7	COVER,SIDE 1 (MDRYM1)	1					
41	F1W–U3768–01	CUSHION, RUBBER	1					
42	F3X–U517E–00	NUT	1					
43	F5G–U6829–09	SCREW	4					
44	F2N–U142L–00	NUT, LOCK	1					
45	F5G–U377C–01–P7	COVER,SIDE 2 (MDRYM1)	1					
46	F1W–U3768–01	CUSHION, RUBBER	1					
47	F3X–U517E–00	NUT	1					
48	F5G–U6829–09	SCREW	4					
49	F2N–U142L–00	NUT, LOCK	1					
50	F3X–U370J–H0	SIDE ORNAMENT ASSY 1	1					
51	F5G–U6829–00	SCREW	2					
52	F2X–U5175–00	PLATE, FIX	2					
53	F5G–U6829–09	SCREW	1					
54	F2N–U142L–00	NUT, LOCK	1					

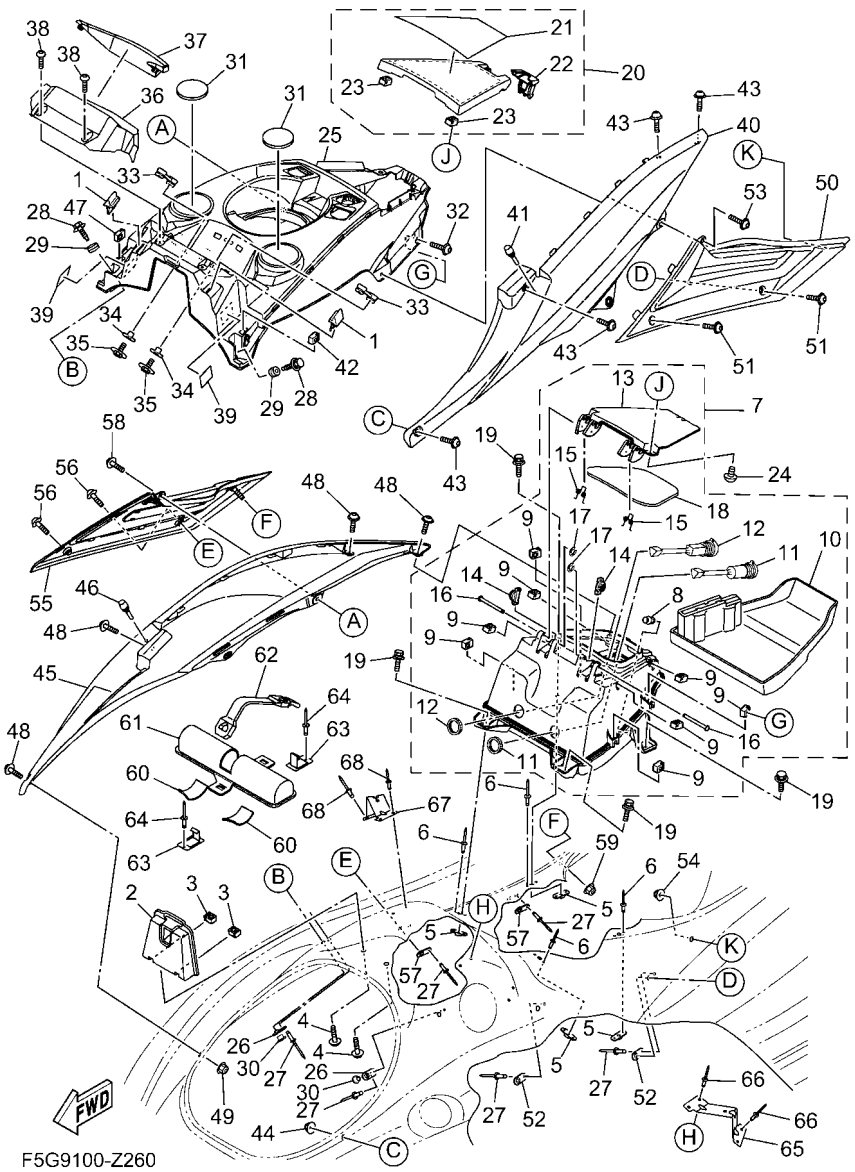

FIG. 26 ENGINE HATCH 1

REF. NO.	PART NO.	DESCRIPTION	F5G9					REMARKS
55	F3X–U370K–H0	SIDE ORNAMENT ASSY 2	1					
56	F5G–U6829–00	SCREW	2					
57	F2X–U5175–00	PLATE, FIX	2					
58	F5G–U6829–09	SCREW	1					
59	F2N–U142L–00	NUT, LOCK	1					
60	F1K–U759C–00	MAT 2	2					
61	F1K–U5983–01	BOX, FIRE EXTINGUISHER	1					
62	F2P–U828K–00	BAND 1	1					
63	F1K–U5772–04	HOOK A	2					
64	90267–489U1	RIVET,BLIND	2					
65	F5G–U974A–00	RFM.,DASH BOARD 1	1					
66	F4P–U516R–01	RIVET 1	4					
67	F5G–U974B–00	RFM.,DASH BOARD 2	1					
68	F4P–U516R–01	RIVET 1	4					

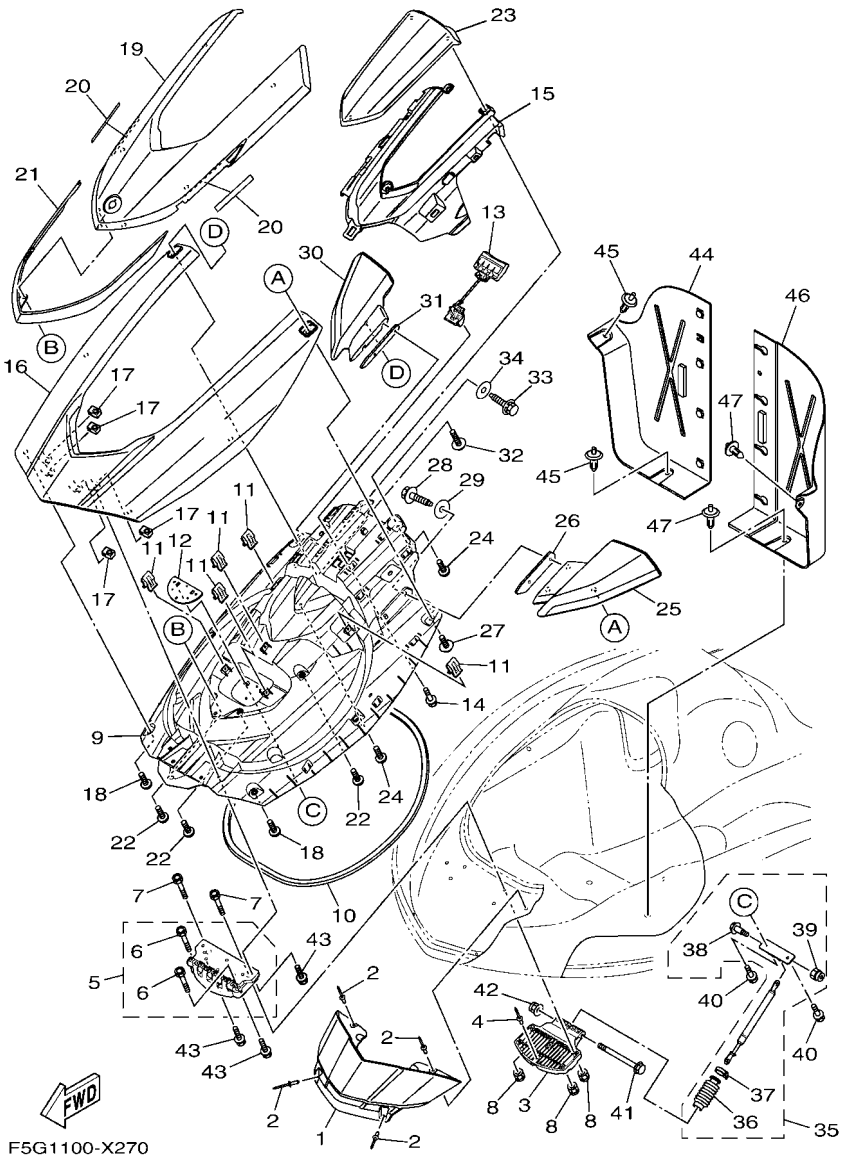

FIG. 27 ENGINE HATCH 2

REF. NO.	PART NO.	DESCRIPTION	F5G9					REMARKS
1	F3X–U513M–02–PC	COVER, FRONT (SSA)	1					
2	90267–489U6	RIVET, BLIND	4					
3	F3X–U518E–00	PLATE, HINGE LID	1					
4	90267–48806	RIVET, BLIND	2					
5	F3X–U517D–01	HINGE, LID	1					
6	F3X–U3222–00	.BOLT	2					
7	F3X–U3222–00	BOLT	2					
8	F2N–U142L–00	NUT, LOCK	4					
9	F5G–U519G–02	INNER, ENGINE HATCH	1					
10	F3X–U2663–10	PACKING 1	1					
11	F3Y–U153K–00	CLIP	5					
12	F3X–U5148–00	PLATE, HATCH	1					
13	F3X–U517C–00	LOCK, LID	1					
14	90119–059U4	BOLT, WITH WASHER	2					
15	F5G–U519F–00	OUTER, ENGINE HATCH	1					
16	F5G–U517B–01–P6	LID, ENGINE ROOM (SSA)	1					
17	F3X–U517E–00	NUT	4					
18	F2S–U13C1–00	SCREW	4					
19	F5G–U515N–02–P7	VISOR (MDRYM1)	1					
20	F0X–U515E–02	DAMPER 2	2					
21	F5G–U517V–01	ORNAMENT, CENTER	1					
22	F2S–U13C1–00	SCREW	5					
23	F5G–U515P–01	VISOR, 2	1					
24	F2S–U13C1–00	SCREW	3					
25	F3X–U590D–D0	MIRROR ASSY. 1	1					
26	F5G–U5193–00	PLATE	1					
27	F5G–U6829–09	SCREW	1					

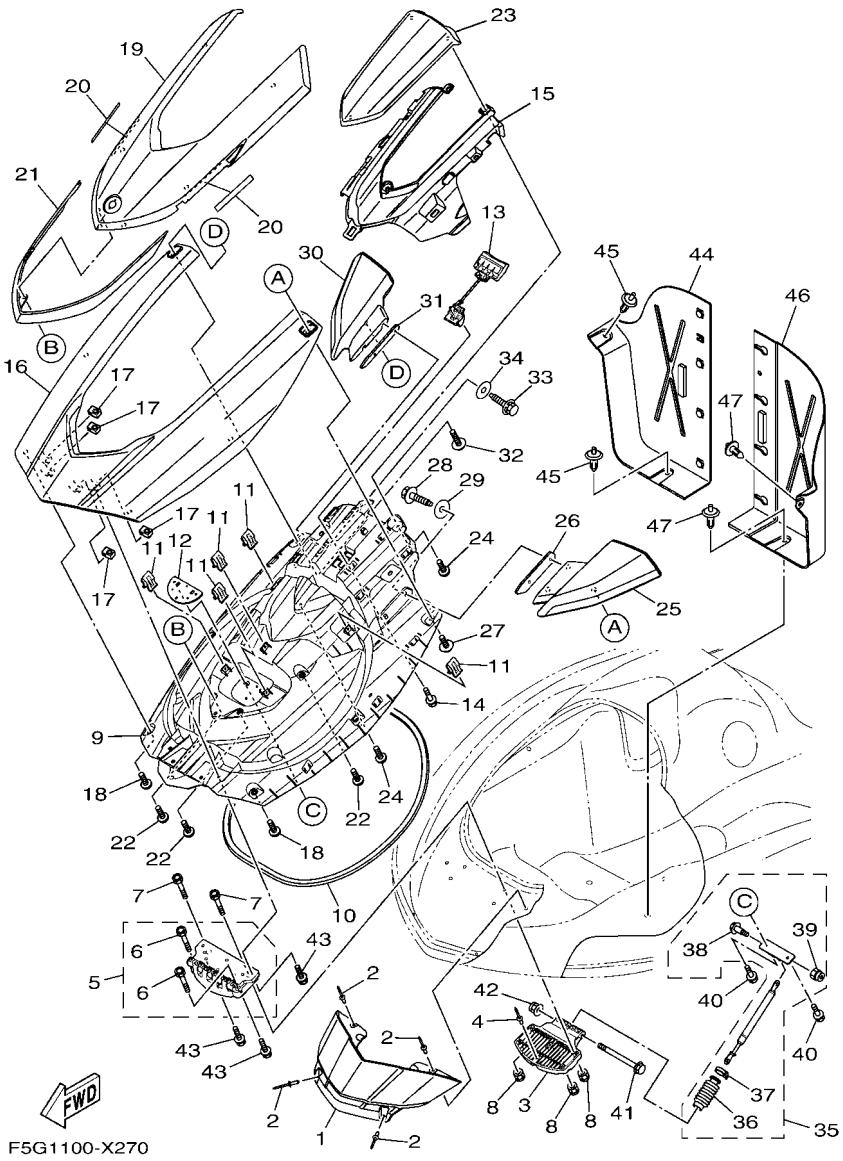

FIG. 27 ENGINE HATCH 2

REF. NO.	PART NO.	DESCRIPTION	F5G9					REMARKS
28	90119–06820	BOLT, WITH WASHER	2					
29	90201–068G0	WASHER, PLATE	2					
30	F3X–U590E–D0	MIRROR ASSY. 2	1					
31	F5G–U5193–00	PLATE	1					
32	F5G–U6829–09	SCREW	1					
33	90119–06820	BOLT, WITH WASHER	2					
34	90201–068G0	WASHER, PLATE	2					
35	F2S–6514S–00	DAMPER ASSY	1					
36	F1W–6514T–00	.COVER, DAMPER	1					
37	1UA–82591–00	.BAND	1					
38	90109–06218	.BOLT	1					
39	95720–06300	.NUT, SELF-LOCKING	1					
40	90119–069UH	BOLT, WITH WASHER	2					
41	F3X–U491K–00	BOLT, SPECIAL	1					
42	F3Y–U142L–00	NUT, LOCK	1					
43	90119–06896	BOLT, WITH WASHER	4					
44	F3X–U475B–00	LOCKER,BOW	1					
45	F4P–U1454–00	RIVET	2					
46	F3X–U475F–00	PLATE, LOKER BOW	1					
47	F4P–U1454–00	RIVET	2					

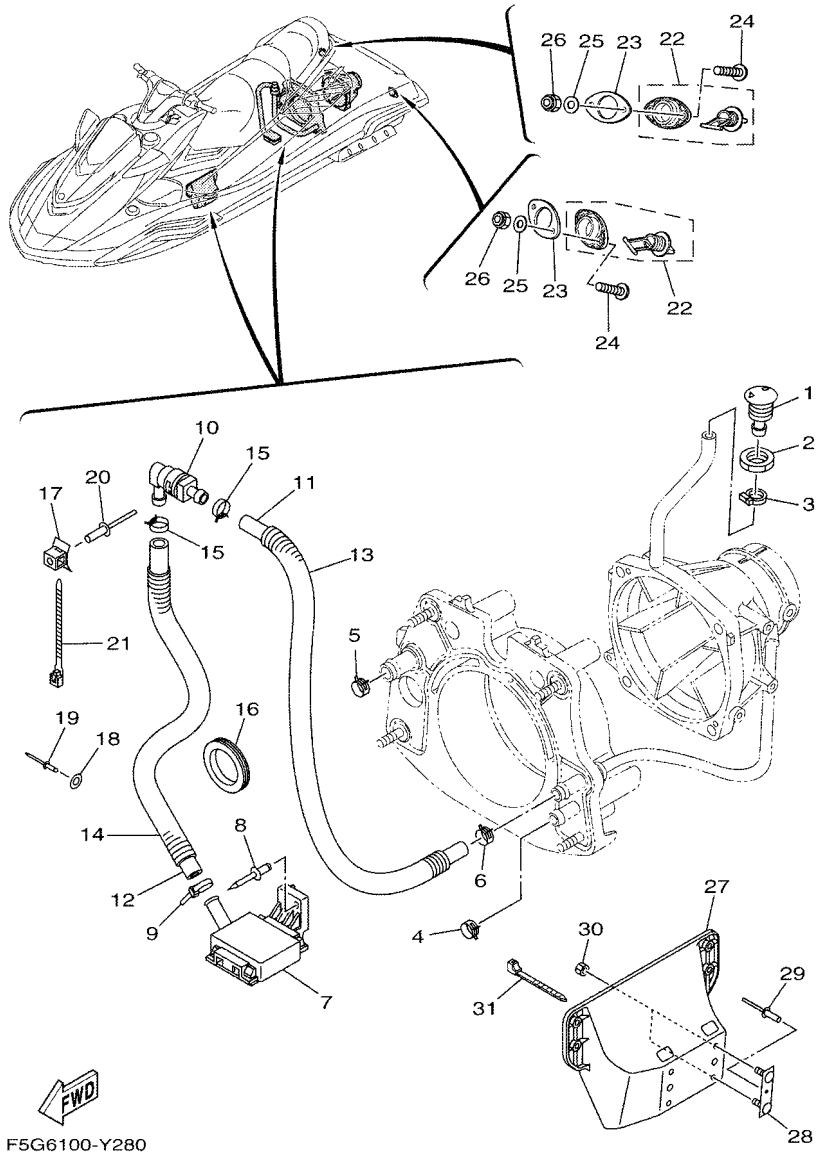

FIG. 28 HULL & DECK

REF. NO.	PART NO.	DESCRIPTION	F5G9					REMARKS
1	F1W–U269B–00	SPOUT	1					
2	EU0–61652–00	NUT	1					
3	90601–118UF	BAND, HOSE 18	1					
4	90467–200A3	CLIP	1					
5	90467–240A3	CLIP	1					
6	90467–180A5	CLIP	1					
7	F1B–U761D–02	STRAINER, BILGE	1					
8	90267–489U8	RIVET, BLIND	1					
9	90601–200U1	BAND	1					
10	68N–5112T–00	JOINT, HOSE	1					
11	90445–20804	HOSE (L860)	1					
12	90445–20800	HOSE (L500)	1					
13	90446–27M73	HOSE (L700)	1					
14	90446–27M55	TUBE (L400)	1					
15	90467–180A5	CLIP	2					
16	F4F–U1338–00	GROMMET	1					
17	F1W–U828M–00	BASE, CLAMP	1					
18	9299R–05200	WASHER	1					
19	90267–48806	RIVET, BLIND	1					
20	90267–48802	RIVET, BLIND	1					
21	90464–32801	CLAMP	1					
22	F1S–U2280–02	DRAIN PLUG ASSY.	2					
23	F1S–U2285–01	PACKING, DRAIN	2					
24	9788R–05025	SCREW, PAN HEAD	4					
25	9299R–05200	WASHER	4					
26	9572R–05300	NUT, FLANGE	4					
27	F1W–U8572–01	BRACKET 2	1					

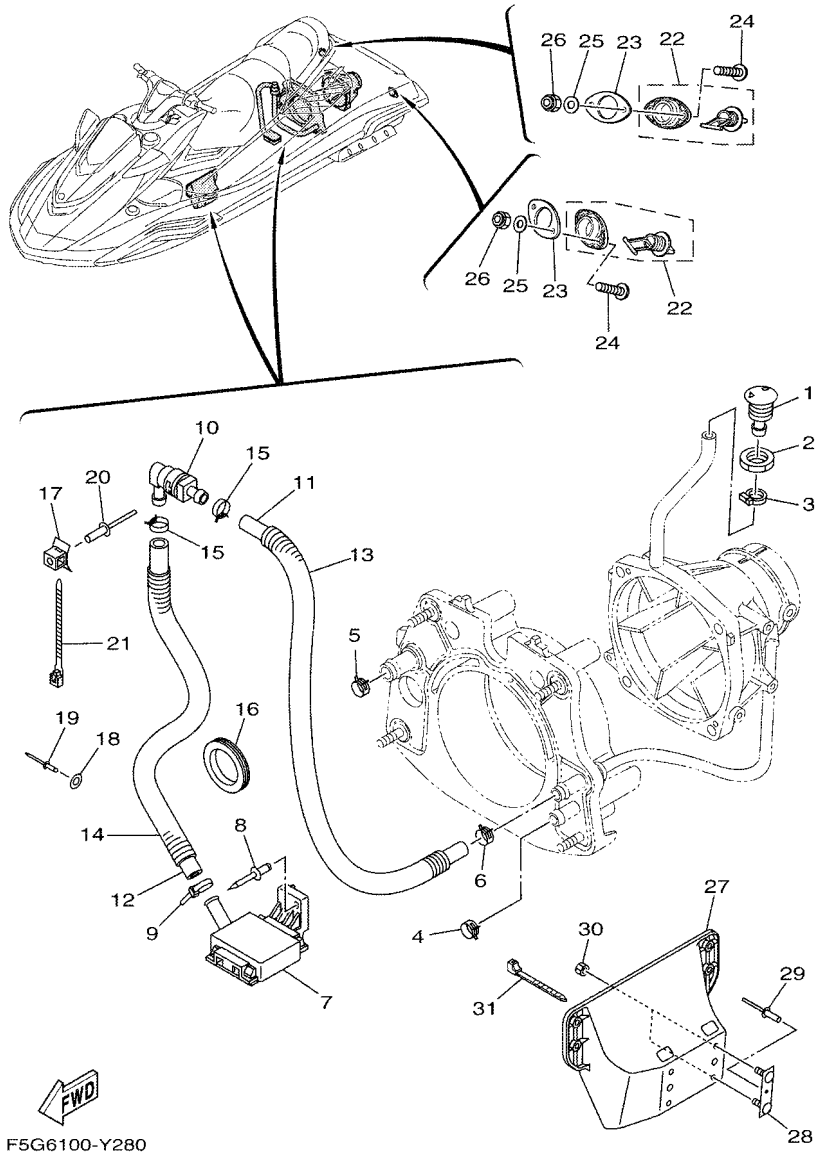

FIG. 28 HULL & DECK

REF. NO.	PART NO.	DESCRIPTION	F5G9					REMARKS
28	F1K–U826C–03	BRACKET	2					
29	90267–489U1	RIVET,BLIND	2					
30	F3Y–U142L–00	NUT, LOCK	4					
31	90464–32801	CLAMP	1					

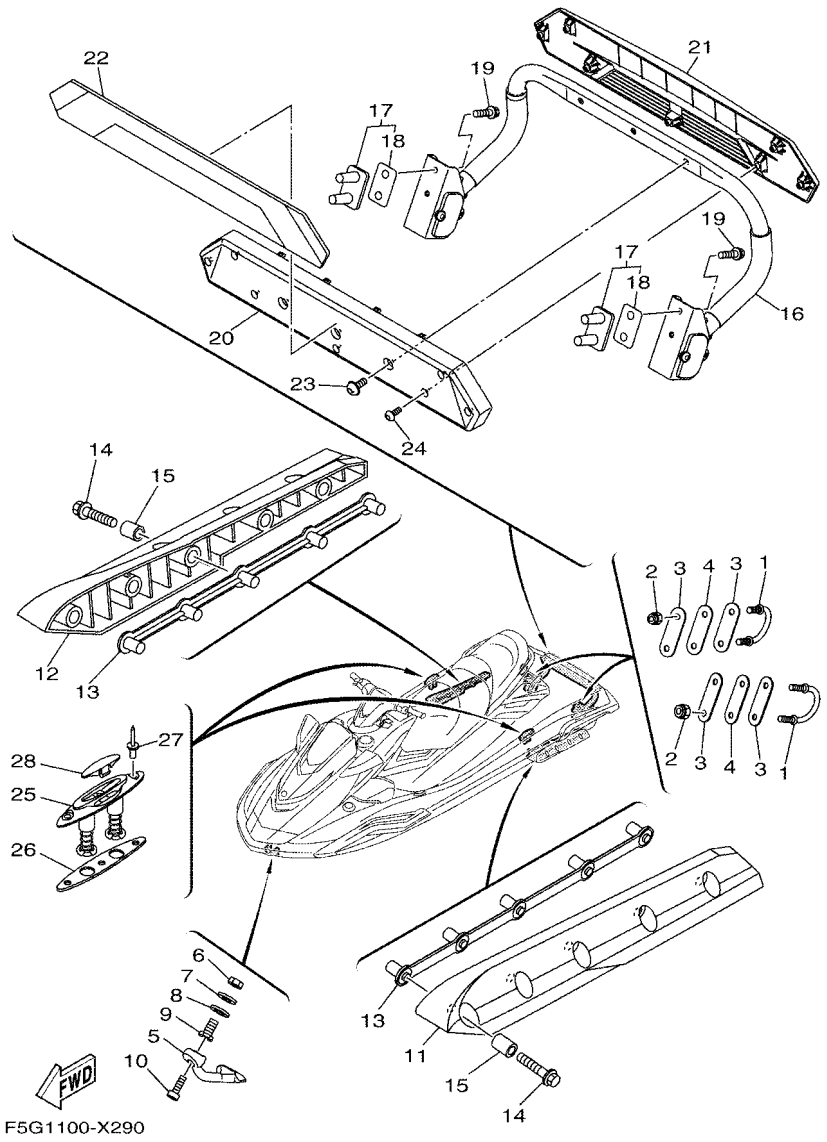

FIG. 29 HULL & DECK 2

REF. NO.	PART NO.	DESCRIPTION	F5G9					REMARKS
1	F2N–U1628–10	STERN EYE	2					
2	9572R–08300	NUT, FLANGE	4					
3	GP7–U4953–10	PLATE A	4					
4	F1B–U1653–03	PACKING	2					
5	F1K–61624–00	BOW EYE 1	1					
6	99780–12600	NUT.HEX.(COARS)	2					
7	92990–12200	WASHER, PLAIN	2					
8	F0X–61637–00	WASHER	2					
9	F0X–61652–01	NUT	2					
10	90110–06040	BOLT, HEXAGON SOCKET HEAD	2					
11	F1S–U883N–01	STABILIZER LH	1					BLACK
12	F1S–U883P–01	STABILIZER RH	1					BLACK
13	F1X–U883T–02	BRACKET,STABILIZER	2					
14	90105–08860	BOLT, FLANGE	10					
15	F2N–U8169–10	SPACER	10					
16	F3X–U278A–00	LADDER, STEP ASSY	1					
17	F2S–U278F–01	BRACKET, LADDER LH	2					
18	F2S–U278H–01	.PACKING, BRKT. 1	1					
19	90119–08861	BOLT, WITH WASHER	4					
20	F3X–U882F–02	STEP	1					
21	F3X–U884R–01	PLATE, STEP 1	1					
22	F3X–U4994–00	COVER STEP 1	1					
23	90119–069UH	BOLT, WITH WASHER	2					
24	F2S–U13C1–00	SCREW	7					
25	F4G–U163A–02	CLEAT ASSY.	2					
26	F4G–U2284–10	PACKING	2					
27	F3Y–U1454–00	RIVET	6					

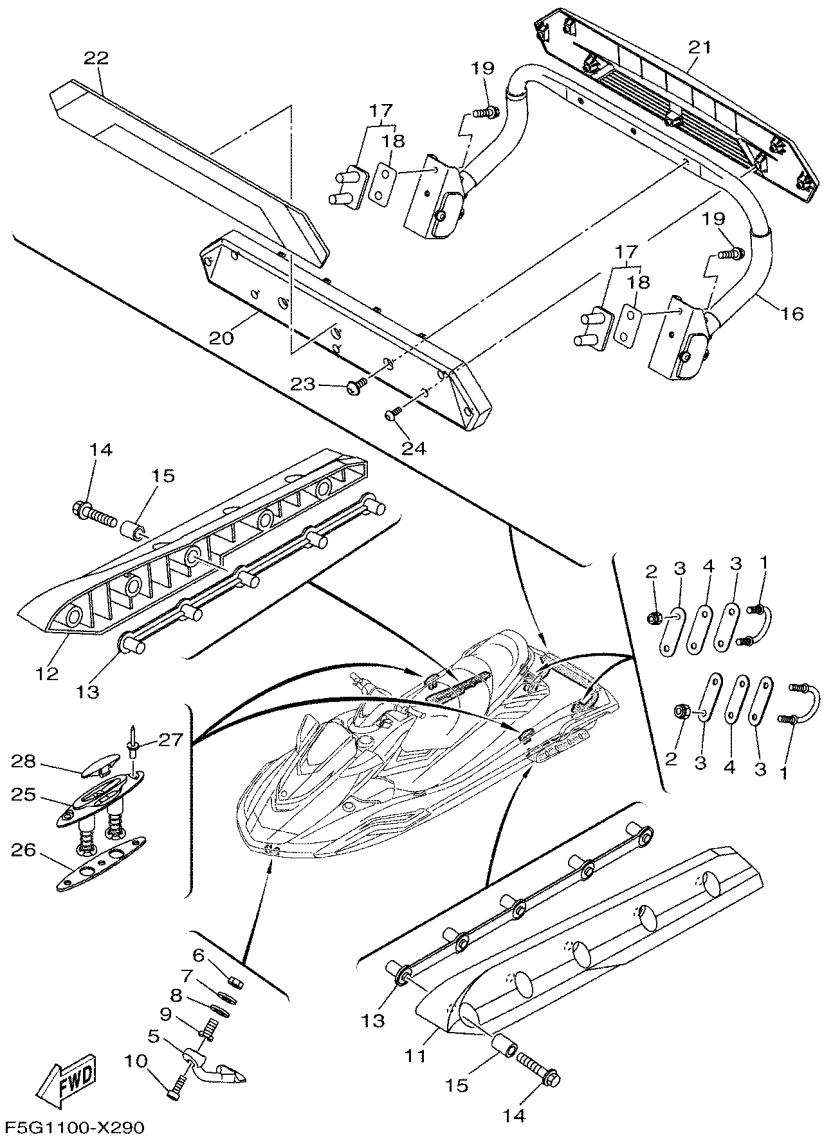

FIG. 29 HULL & DECK 2

REF. NO.	PART NO.	DESCRIPTION	F5G9					REMARKS
28	F1X–U826D–01	COVER	2					

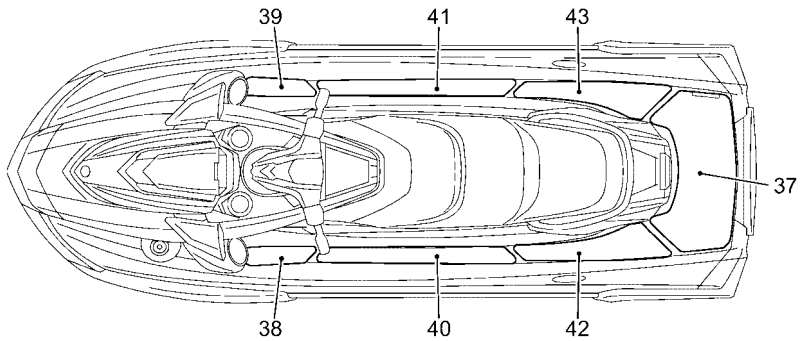

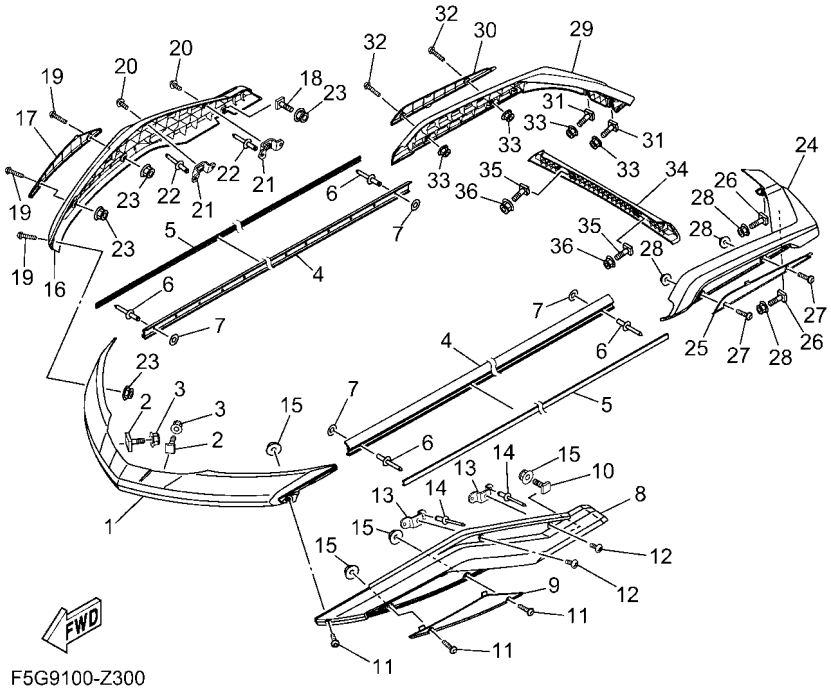

FIG. 30 GUNWALE & MAT

REF. NO.	PART NO.	DESCRIPTION	F5G9					REMARKS
1	F3X–U2511–01	GUNWALE, BOW	1					BLACK
2	F1W–U491K–01	BOLT, SPECIAL	2					
3	F2N–U142L–00	NUT, LOCK	2					
4	F3X–U2512–00	GUNWALE, SIDE	2					BLACK
5	F3X–U2519–C0	INNER,GUNWALE	2					BOURBON
6	90267–489U8	RIVET, BLIND	12					
7	9299R–05200	WASHER	12					
8	F3X–U252E–00	JOINT, GUNWALE LH	1					BLACK
9	F3X–U2514–R0	GUNWALL INSIDE	1					BOURBON
10	F1W–U491K–01	BOLT, SPECIAL	1					
11	F3X–U7823–12	SCREW	3					
12	F7K–U8198–00	SCREW	2					
13	F3X–U4949–00	BRACKET	2					
14	90267–489U6	RIVET, BLIND	4					
15	F2N–U142L–00	NUT, LOCK	4					
16	F3X–U252F–00	JOINT, GUNWALE RH	1					BLACK
17	F3X–U2514–S0	GUNWALL INSIDE	1					BOURBON
18	F1W–U491K–01	BOLT, SPECIAL	1					
19	F3X–U7823–12	SCREW	3					
20	F7K–U8198–00	SCREW	2					
21	F3X–U4949–00	BRACKET	2					
22	90267–489U6	RIVET, BLIND	4					
23	F2N–U142L–00	NUT, LOCK	4					
24	F3X–U251D–00	GUNWALE, STERN 1	1					BLACK
25	F3X–U255C–R0	INNER GUNWALE, AFT	1					BOURBON
26	F1W–U491K–01	BOLT, SPECIAL	2					
27	F3X–U7823–12	SCREW	2					

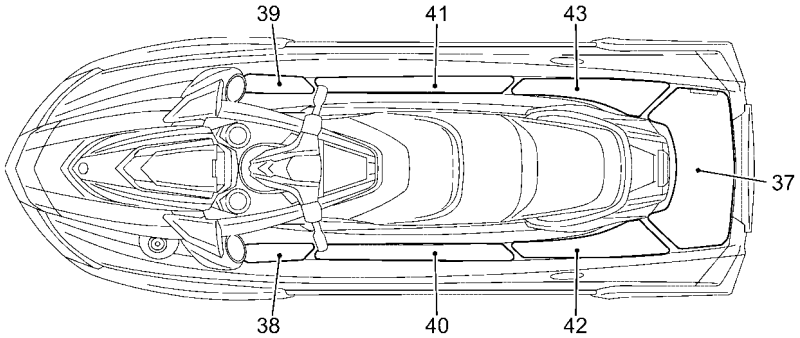

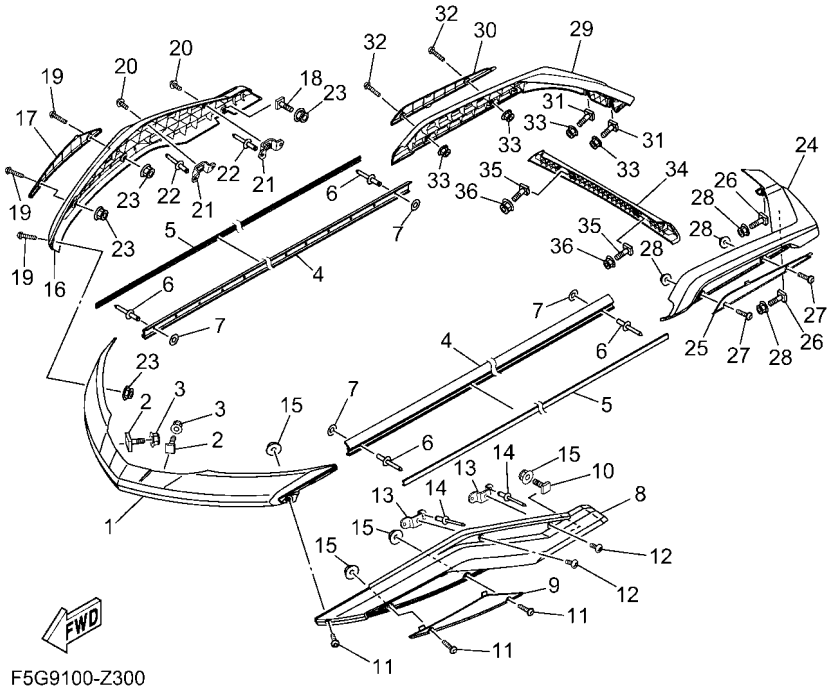

FIG. 30 GUNWALE & MAT

REF. NO.	PART NO.	DESCRIPTION	F5G9					REMARKS
28	F2N–U142L–00	NUT, LOCK	4					
29	F3X–U251E–00	GUNWALE, STERN 2	1					BLACK
30	F3X–U255C–S0	INNER GUNWALE, AFT	1					BOURBON
31	F1W–U491K–01	BOLT, SPECIAL	2					
32	F3X–U7823–12	SCREW	2					
33	F2N–U142L–00	NUT, LOCK	4					
34	F3X–U252C–01	COVER, GUNWALE 1	1					BLACK
35	F1W–U491K–01	BOLT, SPECIAL	2					
36	F2N–U142L–00	NUT, LOCK	2					
37	F3X–U3581–01	MAT, UPPER	1					GREY/BLACK
38	F3V–U351H–00	MAT, STEP 1	1					GRAY/BLACK
39	F3V–U351J–00	MAT, STEP 2	1					GRAY/BLACK
40	F3X–U351K–00	MAT, STEP 3	1					GREY/BLACK
41	F3X–U351M–00	MAT, STEP 4	1					GREY/BLACK
42	F3X–U351N–00	MAT, STEP 5	1					GREY/BLACK
43	F3X–U351P–00	MAT, STEP 6	1					GREY/BLACK

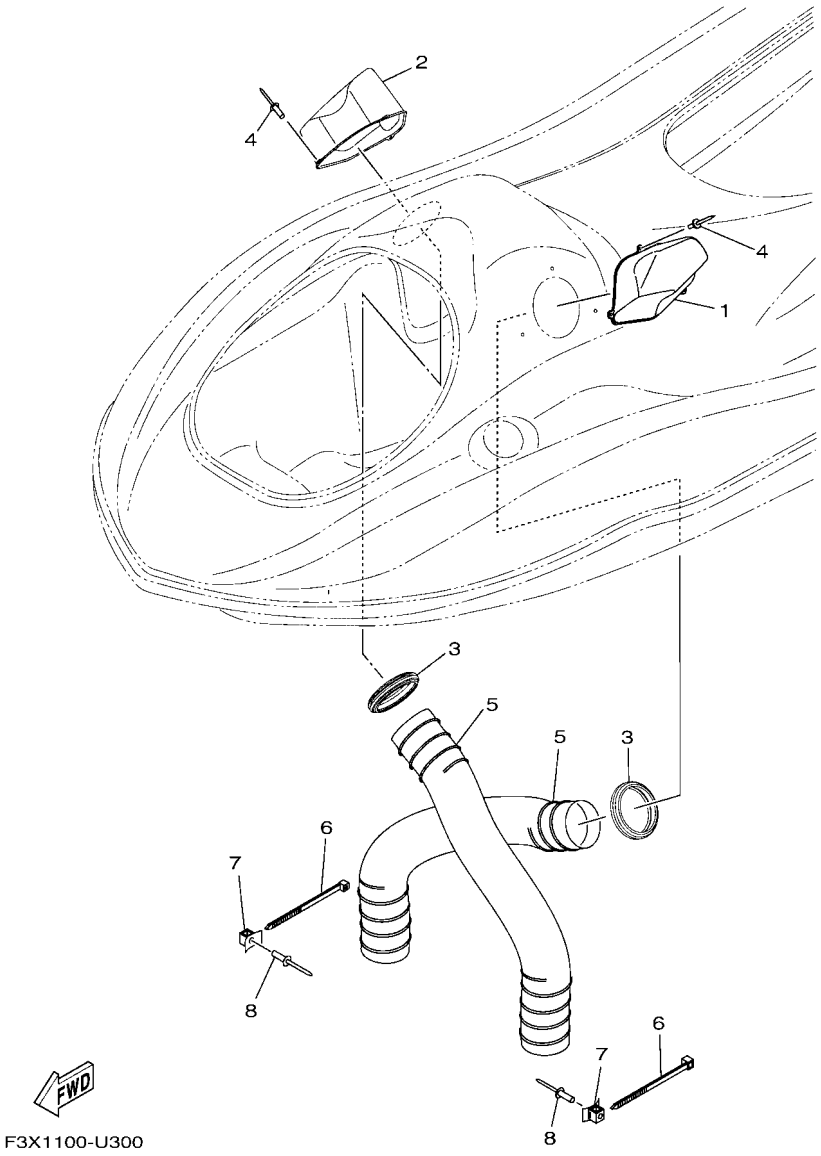

FIG. 31 VENTILATION

REF. NO.	PART NO.	DESCRIPTION	F5G9					REMARKS
1	F3X–U2187–00	BOX, INDUCTION 1	1					
2	F3X–U2188–00	BOX, INDUCTION 2	1					
3	F2N–U2127–00	BASE, AIR INTAKE	2					
4	90267–48806	RIVET, BLIND	6					
5	F2N–U213G–02	HOSE, VENTILATOR 2	2					
6	90464–99804	CLAMP	2					
7	F1W–U828M–00	BASE, CLAMP	2					
8	90267–48806	RIVET, BLIND	2					

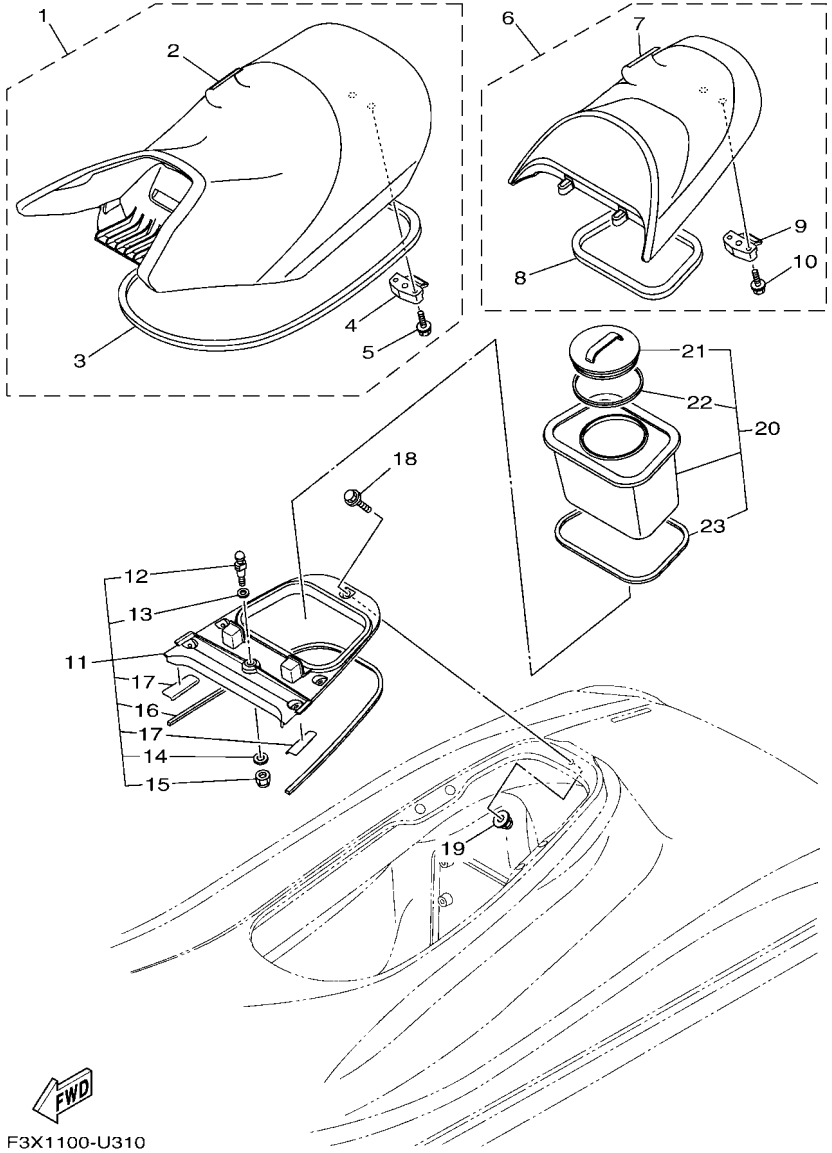

FIG. 32 SEAT & UNDER LOCKER

REF. NO.	PART NO.	DESCRIPTION	F5G9					REMARKS
1	F3X–U371A–Y0	DOUBLE SEAT ASSY	1					
2	F3X–U371B–Y0	.COVER, SEAT 1	1					
3	F3X–U2664–01	.PACKING	1					
4	F2C–U3850–00	.SEAT LOCK ASSY	1					
5	90119–069UP	.BOLT, WITH WASHER	2					
6	F3X–U372A–Y0	SINGLE SEAT ASSY	1					
7	F3X–U372B–Y0	.COVER, SEAT	1					
8	F3X–U266D–01	.PACKING 5	1					
9	F2C–U3850–00	.SEAT LOCK ASSY	1					
10	90119–069UP	.BOLT, WITH WASHER	2					
11	F2S–U890L–05	DECK BEAM ASSY	1					
12	GH1–U3774–00	.PIN	1					
13	90201–109U6	.WASHER, PLATE	1					
14	9299R–10200	.WASHER	1					
15	9572R–10300	.NUT, NYLON	1					
16	F2S–U375E–00	.PACKING 1	1					
17	F2S–U8244–00	.PACKING	2					
18	90119–08828	BOLT, WITH WASHER	5					
19	F3Y–U142L–00	NUT, LOCK	5					
20	F2C–U591A–03	CASE ASSY 1	1					
21	F2C–U591C–00	.CAP,CASE	1					
22	F2C–U591D–01	.PACKING,CASE	1					
23	F2C–U266E–00	.PACKING,6	1					

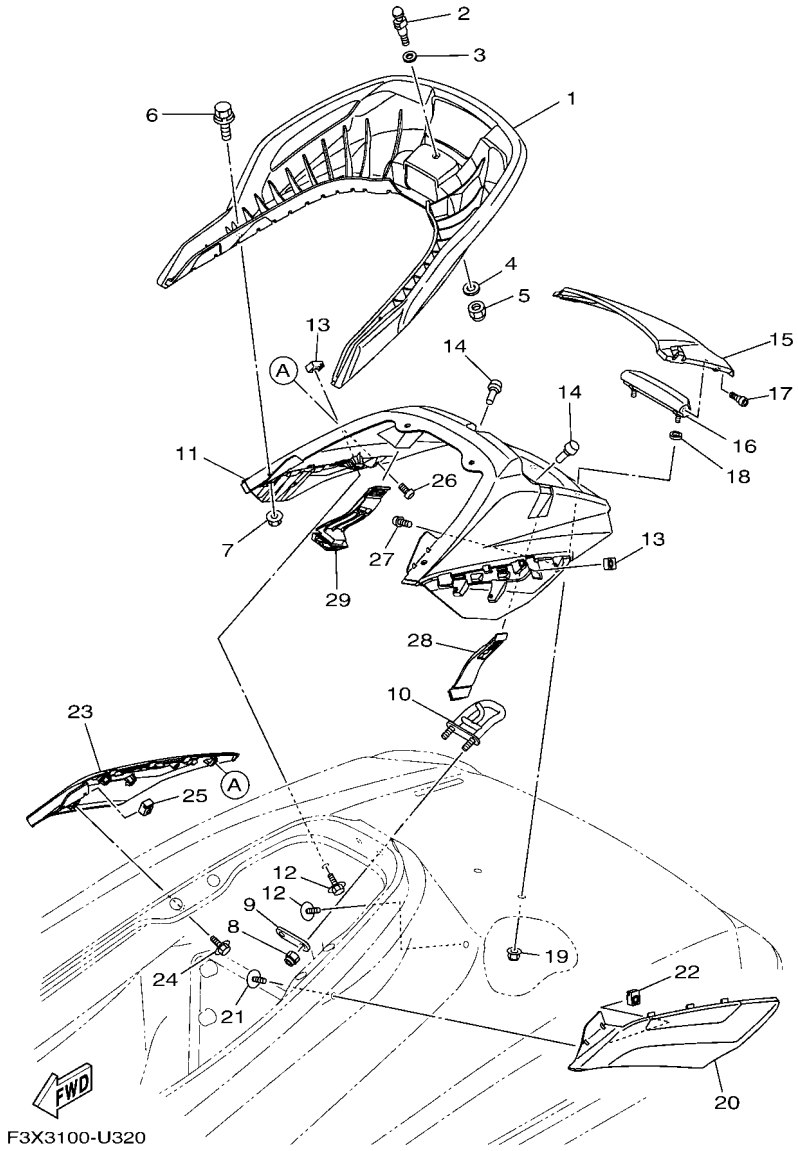

FIG. 33 SEAT & UNDER LOCKER 2

REF. NO.	PART NO.	DESCRIPTION	F5G9					REMARKS
1	F3X–U271B–00	GRIP, HAND	1					
2	GH1–U3774–00	PIN	1					
3	90201–109U6	WASHER, PLATE	1					
4	9299R–10200	WASHER	1					
5	9572R–10300	NUT, NYLON	1					
6	90119–08829	BOLT, WITH WASHER	4					
7	F3Y–U142L–00	NUT, LOCK	4					
8	9572R–08300	NUT, FLANGE	2					
9	GP7–U4953–10	PLATE A	1					
10	F3J–U1629–00	SKI TOWS	1					
11	F3X–U89A1–00–P7	STORAGE, STERN (SSA)	1					
12	F3X–U13B4–00	BOLT	2					
13	F3X–U517E–00	NUT	2					
14	F1W–U3768–01	CUSHION, RUBBER	2					
15	F3X–U518M–01–PB	LID LOCKER STERN (SSA)	1					
16	F2S–U271F–01	GRIP, LOWER	1					
17	F2S–U2624–01	BOLT	2					
18	F2S–U2284–01	PACKING	2					
19	F3Y–U142L–00	NUT, LOCK	2					
20	F3X–U890M–E0	STERN COVER ASSY 1	1					
21	F3X–U13B4–00	BOLT	1					
22	F3X–U517E–00	NUT	1					
23	F3X–U890N–E0	STERN COVER ASSY 2	1					
24	F3X–U13B4–00	BOLT	1					
25	F3X–U517E–00	NUT	1					
26	F2S–U13C1–00	SCREW	3					
27	F2S–U13C1–00	SCREW	3					

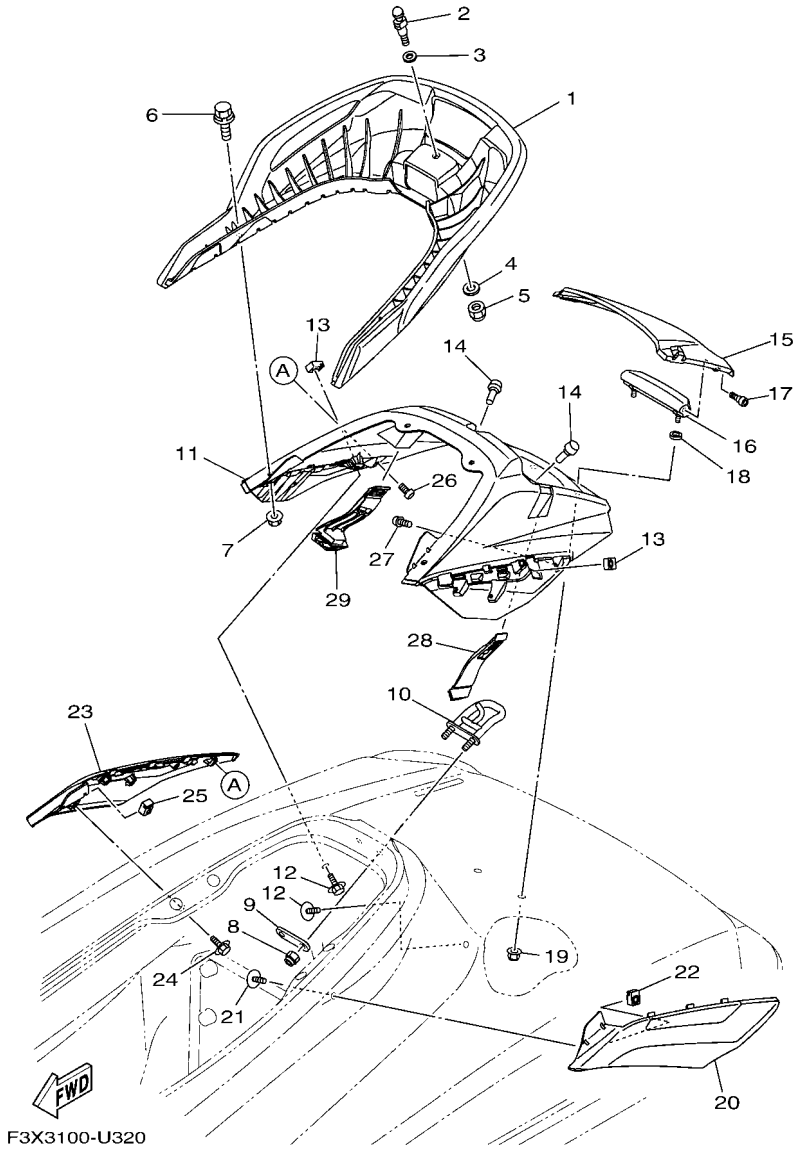

FIG. 33 SEAT & UNDER LOCKER 2

REF. NO.	PART NO.	DESCRIPTION	F5G9					REMARKS
28	F3X–U264L–01	LOCK 1	1					
29	F3X–U264L–11	LOCK 1	1					

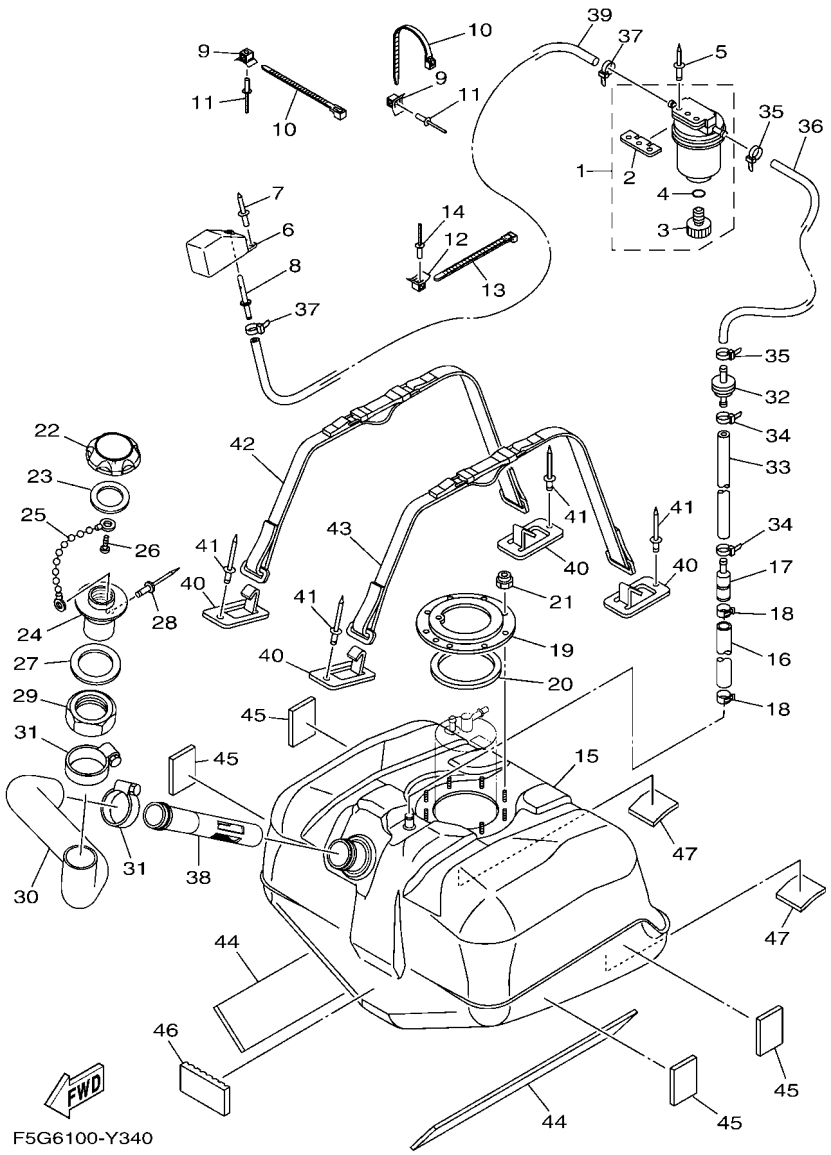

FIG. 34 FUEL TANK

REF. NO.	PART NO.	DESCRIPTION	F5G9					REMARKS
1	F2F–6214A–00	FILTER, VENT ASSY	1					
2	EW2–62142–00	.PLATE, FILTER	1					
3	70R–24543–00	.PLUG, DRAIN	1					
4	70R–24489–00	.O-RING	1					
5	90267–489U2	RIVET, BLIND	2					
6	GP7–62159–02	SOCKET, VENTILATION	1					
7	90267–489U6	RIVET, BLIND	2					
8	F1G–62149–00	PIPE, VENTILATION	1					
9	F1W–U828M–00	BASE, CLAMP	2					
10	90464–32801	CLAMP	2					
11	90267–48806	RIVET, BLIND	2					
12	F1W–U828M–00	BASE, CLAMP	1					
13	90464–32801	CLAMP	1					
14	90267–48806	RIVET, BLIND	1					
15	F4P–U7711–00	TANK, FUEL	1					
16	F4P–U785G–00	HOSE, AIR VENT	1					
17	F4P–U8167–10	CONNECTOR	1					
18	90467–190A2	CLIP	2					
19	F1B–U7773–00	RING	1					
20	F1B–67747–00	PACKING, SEAL	1					
21	9572R–06300	NUT, NYLON	9					
22	F2N–U7831–10	CAP, FUEL FILLER	1					BLACK
23	GP7–U7832–01	PACKING	1					
24	GP7–U7833–11	SOCKET	1					BLACK
25	GP7–U7835–00	CHAIN BALL	1					
26	90169–049U1	SCREW, TRUSS HEAD TAPPING	1					
27	GP7–U7834–00	PACKING FUEL FILLER	1					

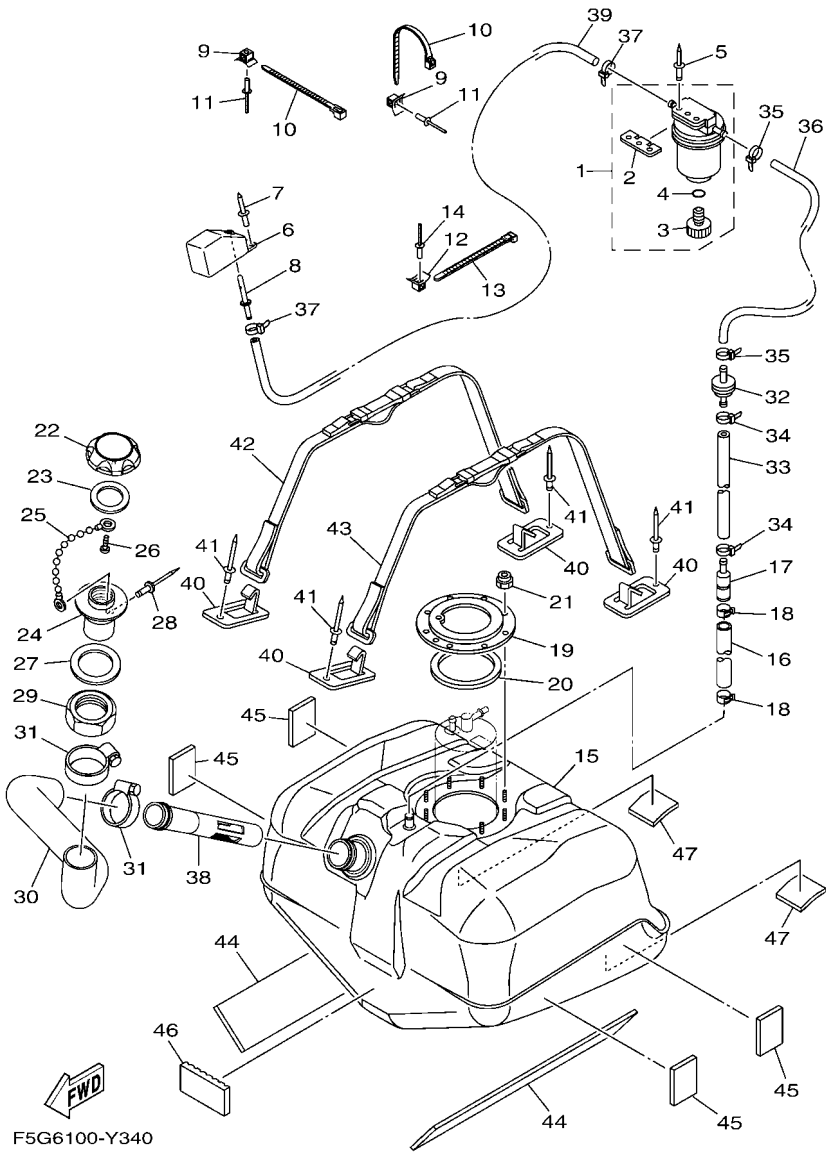

FIG. 34 FUEL TANK

REF. NO.	PART NO.	DESCRIPTION	F5G9					REMARKS
28	90267–329UR	RIVET, BLIND	1					
29	GP7–U783F–00	NUT, FUEL FILLER	1					
30	F3X–U7844–01	HOSE	1					
31	90601–155U4	BAND, HOSE 55	2					
32	F3Y–U7767–00	CHECK VALVE	1					
33	GP7–U785H–00	HOSE, AIR VENT 3	1					
34	90465–11829	CLAMP	2					
35	90465–11829	CLAMP	2					
36	F0D–U785G–10	HOSE, AIR VENT	1					
37	90465–11829	CLAMP	2					
38	F4L–U773D–00	TUBE	1					
39	F0D–U7856–10	HOSE, AIR VENT 3	1					
40	F1K–U5772–04	HOOK A	4					
41	90267–489U1	RIVET,BLIND	4					
42	F2S–67743–01	BELT, TANK 1	1					
43	F2S–67743–01	BELT, TANK 1	1					
44	F2S–U759B–00	MAT 1	2					
45	F1W–U759C–01	MAT 2	4					
46	F1K–U759C–00	MAT 2	1					
47	F1K–U759C–00	MAT 2	2					

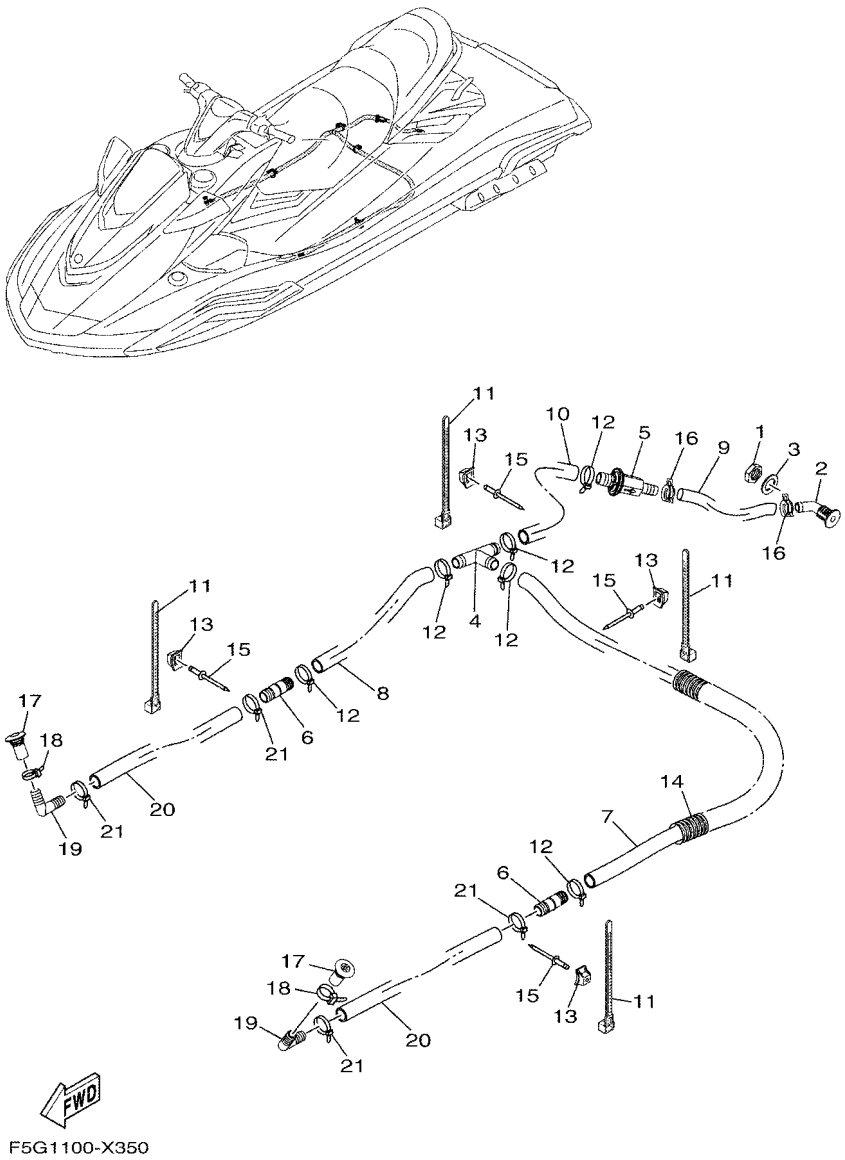

FIG. 35 BILGE PUMP

REF. NO.	PART NO.	DESCRIPTION	F5G9					REMARKS
1	F3X–U224B–00	NUT, DRAIN 1	1					
2	F3X–U224C–00	BODY, DRAIN 1	1					
3	F3X–U7564–00	GASKET	1					
4	F3X–U7857–00	JOINT,HOSE	1					
5	F3X–U7767–00	CHECK VALVE	1					
6	F3X–U7617–00	JOINT, DRAIN	2					
7	F3X–U7629–10	HOSE, DRAIN 2	1					
8	F3X–U2249–10	HOSE, DRAIN	1					
9	F3X–U7628–10	HOSE, DRAIN 3	1					
10	F3X–U7626–10	HOSE 1	1					
11	90464–32801	CLAMP	4					
12	90601–200U1	BAND	6					
13	F1W–U828M–00	BASE, CLAMP	4					
14	6EX–U773D–00	TUBE	1					
15	90267–48802	RIVET, BLIND	4					
16	90467–17802	CLIP	2					
17	F4P–U2255–00	PLUG,DRAIN	2					
18	90601–200U1	BAND	2					
19	F3X–U8377–00	CONNECTOR	2					
20	F3X–U2249–10	HOSE, DRAIN	2					
21	90601–200U1	BAND	4					

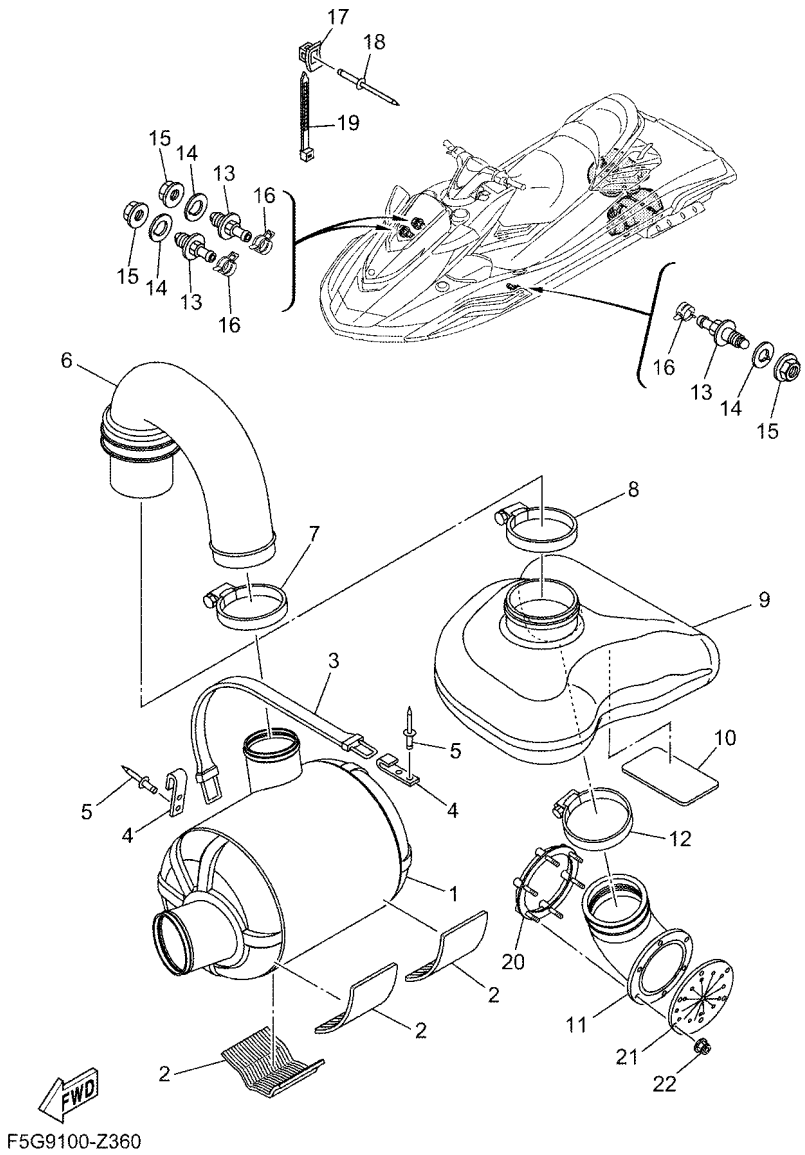

FIG. 36 EXHAUST 3

REF. NO.	PART NO.	DESCRIPTION	F5G9					REMARKS
1	F4P–U7550–00	WATER LOCK COMP.	1					
2	F1S–U8221–00	PAD, BATTERY	3					
3	EW2–67821–00	BAND, FUEL TANK	1					
4	GA7–65772–00	HOOK A	2					
5	90267–489U1	RIVET,BLIND	4					
6	F3X–U7555–00	HOSE, EXHAUST	1					
7	90450–99801	HOSE CLAMP ASSY	1					
8	90450–99804	HOSE CLAMP ASSY	1					
9	F3X–U4261–00	TANK, WATER	1					
10	F1S–U8221–00	PAD, BATTERY	1					
11	F3X–U758D–00	HOSE,EXHAUST 3	1					
12	90450–99801	HOSE CLAMP ASSY	1					
13	F2C–U753B–01	PILOT, WATER	3					
14	F2C–U7564–01	GASKET	3					
15	F2C–U2733–00	NUT	3					
16	90467–150A5	CLIP	3					
17	F1W–U828M–00	BASE, CLAMP	1					
18	90267–48806	RIVET, BLIND	1					
19	90464–32801	CLAMP	1					
20	F1S–U757B–01	PLATE	1					
21	F1B–U751G–10	VALVE, EXHAUST	1					
22	F2N–U142L–00	NUT, LOCK	6					

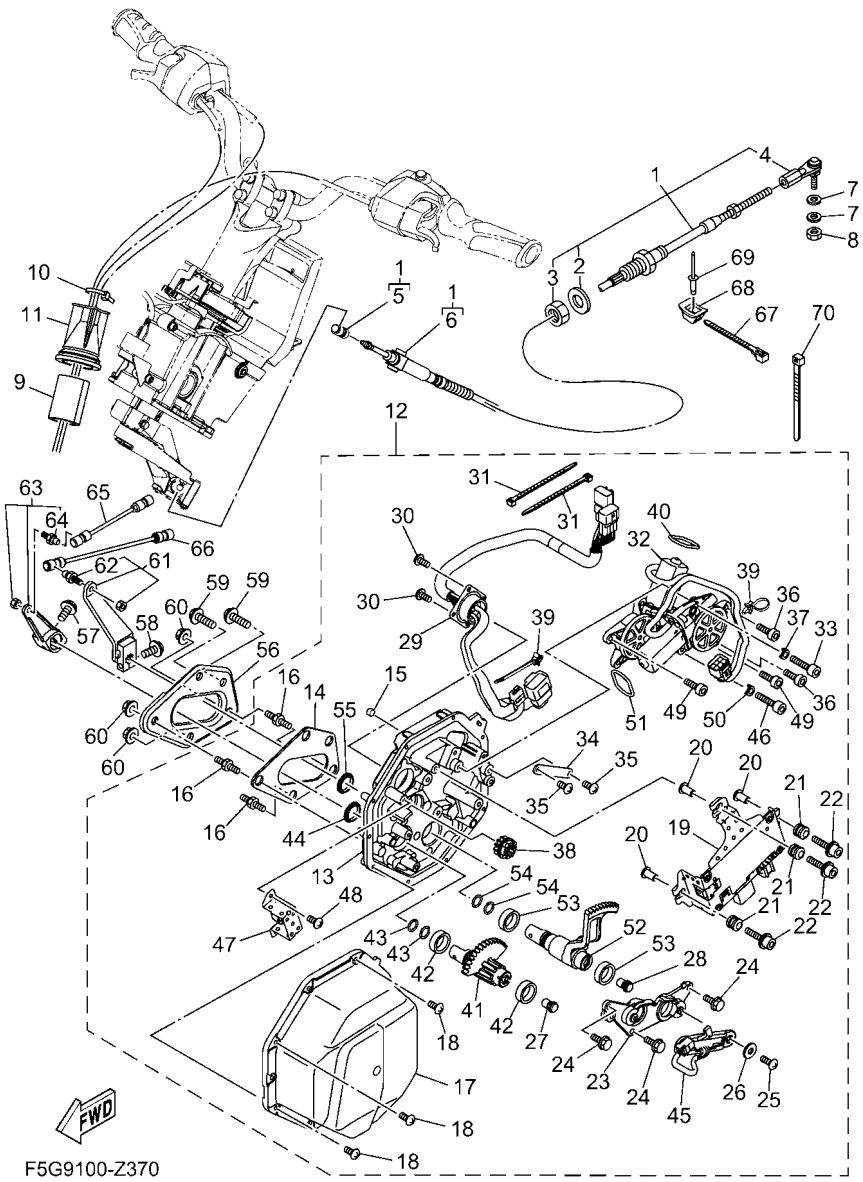

FIG. 37 CONTROL CABLE

REF. NO.	PART NO.	DESCRIPTION	F5G9					REMARKS
1	F1S–61481–12	CABLE, STEERING	1					
2	F1B–61438–00	.PACKING C	1					
3	F1B–6151S–01	.NUT	1					
4	F1B–61461–02	.STUD, JOINT BALL	1					
5	F2N–61460–00	.BALL JOINT ASSY	1					
6	F1B–61425–00	.NUT, LOCK	1					
7	90201–06906	WASHER, PLATE	2					
8	9538R–06700	NUT	1					
9	GJ1–U7578–22	PACKING, HOSE 2	1					
10	90464–32801	CLAMP	1					
11	F3J–U822E–01	GROMMET	1					
12	F7K–6140B–00	MOTOR ASSY.	1					
13	F4P–6152K–00	.HOUSING	1					
14	F3J–63262–00	.SEAL	1					
15	F3J–613D0–00	.PLUG	1					
16	F3J–67369–00	.BOLT, STUD	3					
17	F3Y–6143J–00	.COVER	1					
18	F3Y–68198–00	.SCREW	10					
19	F7K–68197–00	.CONTROL UNIT	1					
20	90387–06119	.COLLAR	3					
21	6A0–82317–01	.DAMPER, IGNITION COIL	3					
22	F3J–613B4–20	.BOLT	3					
23	F4P–61256–00	.PLATE	1					
24	F3Y–613B3–00	.BOLT, HEXAGON	3					
25	F3J–68198–20	.SCREW	2					
26	F3J–613C3–10	.WASHER, PLAIN	2					
27	F3J–60428–00	.MAGNET, SENSOR	1					

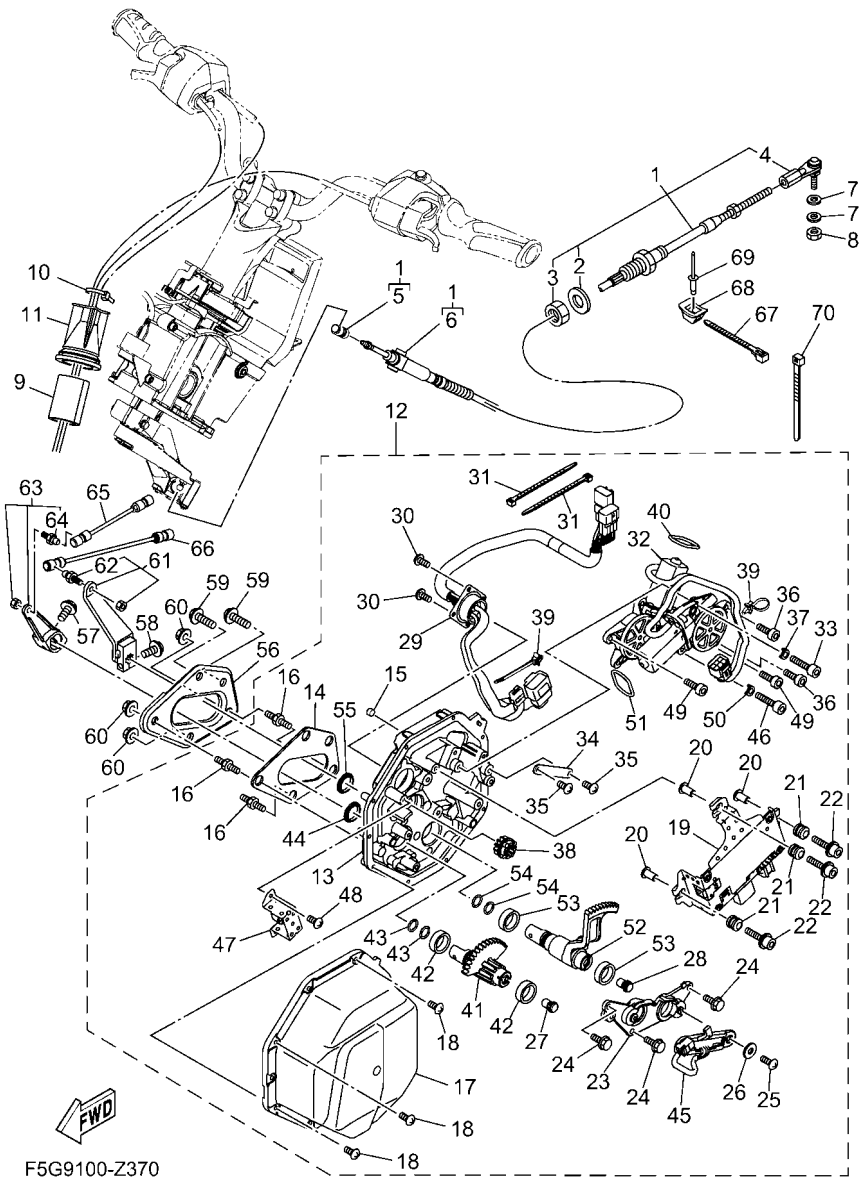

FIG. 37 CONTROL CABLE

REF. NO.	PART NO.	DESCRIPTION	F5G9					REMARKS
28	F3J–60428–00	.MAGNET, SENSOR	1					
29	F4P–68270–00	.WIRE HARNESS ASSY.	1					
30	F3J–68198–00	.SCREW	4					
31	F3J–68273–00	.CLAMP	2					
32	F4P–68352–00	.MOTOR	1					
33	F3J–613B4–00	.BOLT	1					
34	F3Y–61348–00	.PLATE	1					
35	F3J–68198–20	.SCREW	2					
36	F3J–613B4–10	.BOLT	2					
37	F3J–61492–00	.SPACER	1					
38	F4P–60211–00	.GEAR 1	1					
39	F4P–68273–00	.CLAMP	2					
40	F4P–613A5–10	.O-RING	1					
41	F3Y–60221–10	.SHAFT, 1	1					
42	F3Y–61344–00	.BUSH	2					
43	F4P–613A5–00	.O-RING	2					
44	F4P–61344–00	.BUSH	1					
45	F4P–85887–00	.SENSOR ANGLE	1					
46	F3J–613B4–00	.BOLT	1					
47	F4P–61348–00	.PLATE	1					
48	F3J–68198–20	.SCREW	2					
49	F3J–613B4–10	.BOLT	2					
50	F3J–61492–00	.SPACER	1					
51	F4P–613A5–10	.O-RING	1					
52	F5G–60222–00	.SHAFT, 2	1					
53	F3Y–61344–00	.BUSH	2					
54	F4P–613A5–00	.O-RING	2					

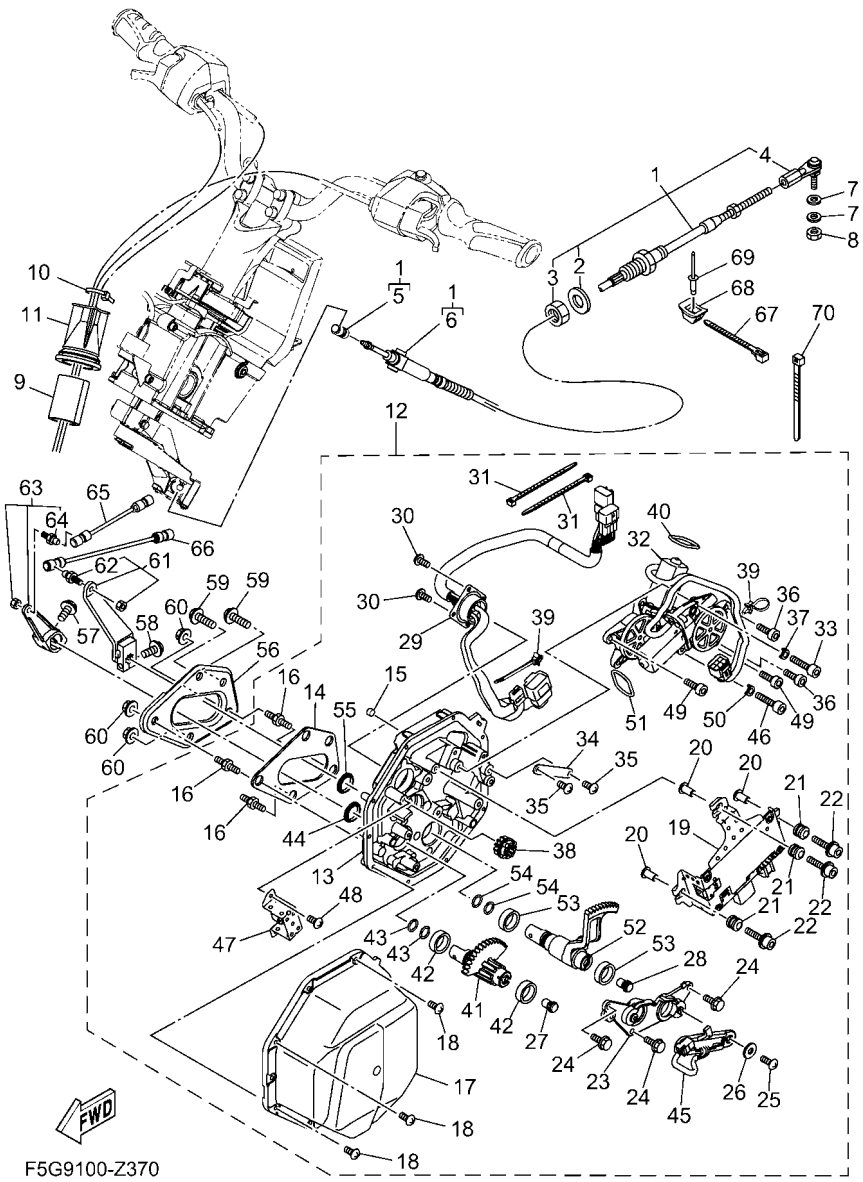

FIG. 37 CONTROL CABLE

REF. NO.	PART NO.	DESCRIPTION	F5G9					REMARKS
55	F4P–61344–00	.BUSH	1					
56	F4P–U8285–00	PLATE	1					
57	90119–06893	BOLT, WITH WASHER	1					
58	90110–06897	BOLT, HEXAGON SOCKET HEAD	1					
59	90119–08851	BOLT, WITH WASHER	2					
60	F3Y–U142L–00	NUT, LOCK	3					
61	F5G–6150E–01	TRIM ARM ASSY	1					
62	6R7–42316–00	.BOLT, JOINT	1					
63	F3Y–6150F–00	SHIFT ARM ASSY	1					
64	6R7–42316–00	.BOLT, JOINT	1					
65	F3J–6150A–00	ROD ASSY	1					
66	F3J–6150D–00	ROD ASSY 2	1					
67	90464–32801	CLAMP	3					
68	F1W–U828M–00	BASE, CLAMP	3					
69	90267–48802	RIVET, BLIND	3					
70	90464–32801	CLAMP	1					

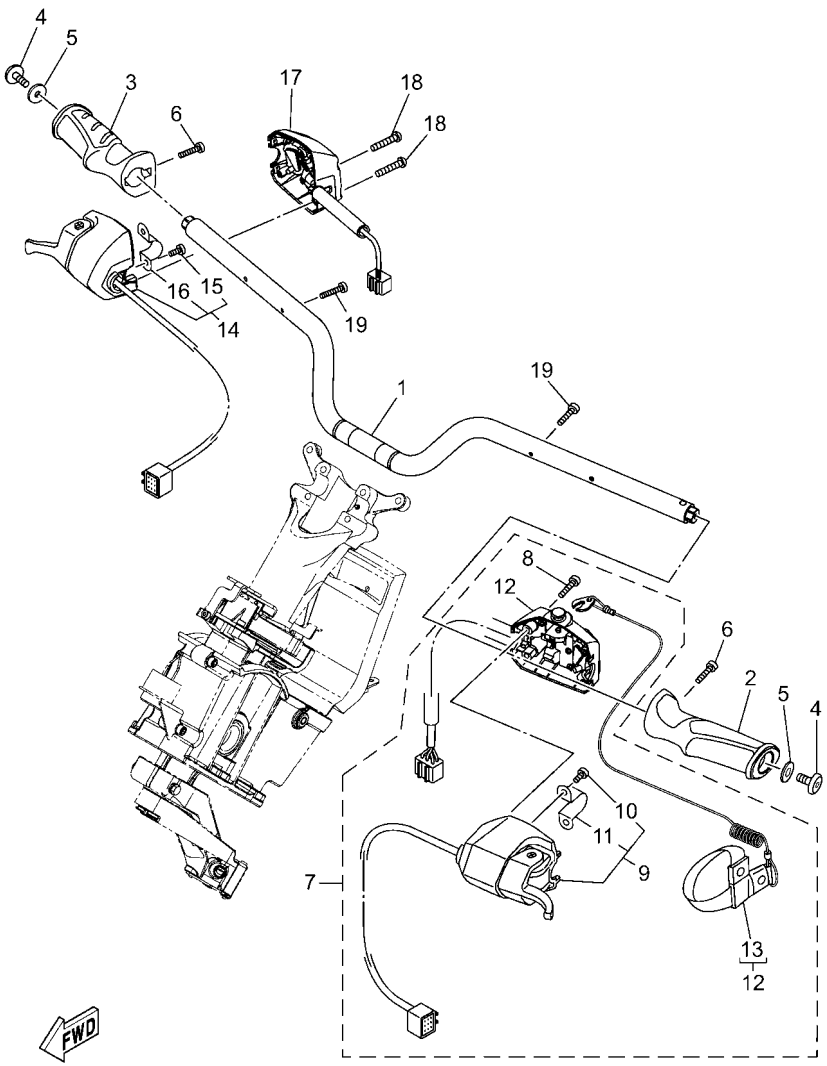

F5G9100-Z380

FIG. 38 STEERING 1

REF. NO.	PART NO.	DESCRIPTION	F5G9					REMARKS
1	F5G–U1552–00	HANDLE	1					
2	F4P–U155C–00	GRIP,HANDLE	1					
3	F4P–U155D–00	GRIP, HANDLE	1					
4	90110–06382	BOLT, HEXAGON SOCKET HEAD	2					
5	90201–068G0	WASHER, PLATE	2					
6	F2S–U1516–00	BOLT	2					
7	F7K–68310–21	SWITCH BOX ASSY	1					
8	6CS–6725F–00	.BOLT, THROTTLE	2					
9	F4P–26411–12	.SHIFT LEVER ASSY	1					
10	F4P–6725F–00	..BOLT, THROTTLE	2					
11	F4P–61368–00	..SUPPORT	1					
12	F7K–8259E–00	.SWITCH ASSY	1					
13	EW2–68348–00	..LANYARD, STOP SWITCH	1					
14	F4P–14305–12	THROTTLE LEVER COMP	1					
15	F4P–6725F–00	.BOLT, THROTTLE	2					
16	F4P–61368–00	.SUPPORT	1					
17	F7K–81860–00	SWITCH ASSY	1					
18	6CS–6725F–00	BOLT, THROTTLE	2					
19	91380–04030	BOLT	2					

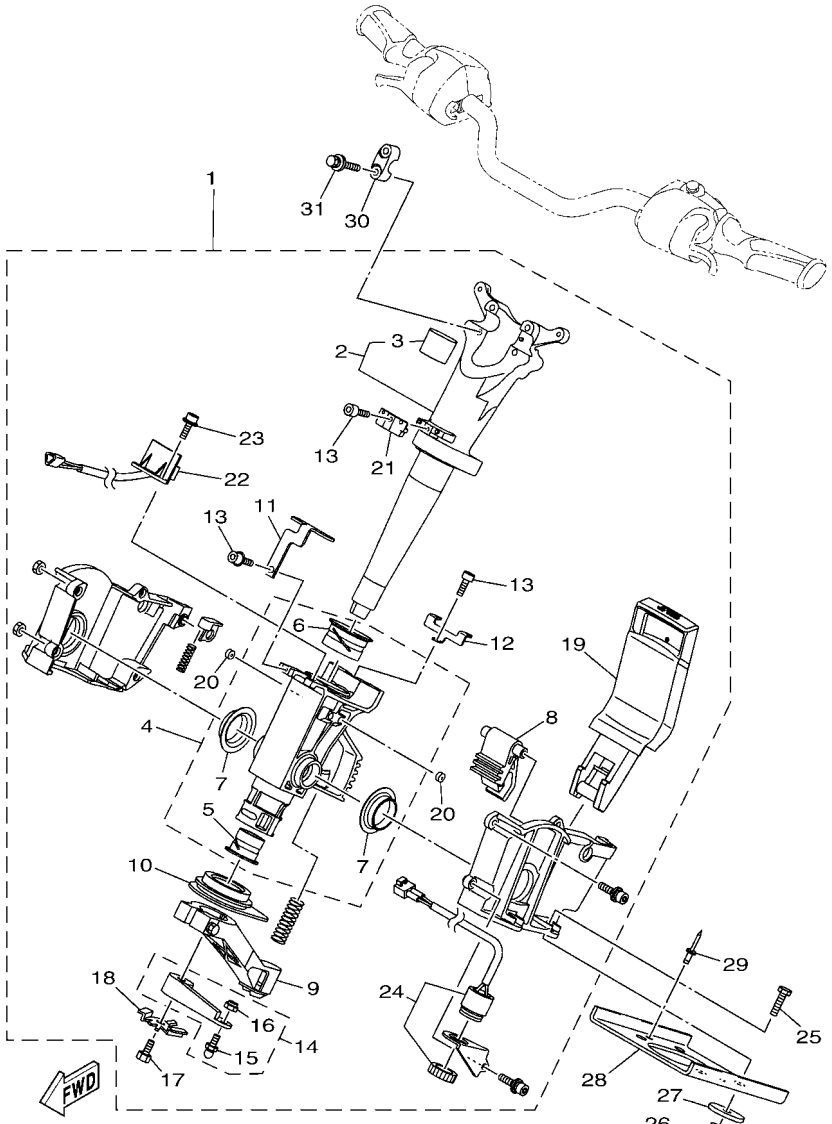

F5G1100-X390

FIG. 39 STEERING 2

REF. NO.	PART NO.	DESCRIPTION	F5G9					REMARKS
1	F5G–61400–01	STEERING MASTER ASSY	1					
2	F5G–67410–00	.SHAFT ASSY	1					
3	F4P–61435–00	..PIPE, SEAL	1					
4	F4P–6773D–00	.TUBE	1					
5	F1S–6134M–00	..BUSH	1					
6	F2C–6134M–00	..BUSH	1					
7	F1S–6134M–10	..BUSH	2					
8	F1S–61782–00	.LOCK 1	1					
9	F1S–6146A–00	.CABLE STOPPER ASSY.	1					
10	F1S–6143C–00	.SEAL, RUBBER	1					
11	F5G–65938–00	.STAY 1	1					
12	F5G–65939–00	.STAY 2	1					
13	F4P–613C1–00	.SCREW	4					
14	F1S–6153R–02	.ARM ASSY.	1					
15	EU0–61461–02	..STUD, JOINT BALL	1					
16	95720–06300	..NUT, SELF-LOCKING	1					
17	F1W–61355–00	.BOLT	1					
18	F1W–6142B–00	.PLATE, RETAINING	1					
19	F2S–6151M–00	.LEVER ASSY	1					
20	F1W–6358B–00	.PLUG	4					
21	F2X–6838C–01	.MAGNET	1					
22	F2X–6838B–02	.SENSOR, MAGNET	1					
23	F1W–61516–00	.BOLT	5					
24	F1S–68341–00	.BUZZER	1					
25	90101–08069	BOLT	4					
26	F3Y–U142L–00	NUT, LOCK	4					
27	F1W–U725E–00	WASHER	4					

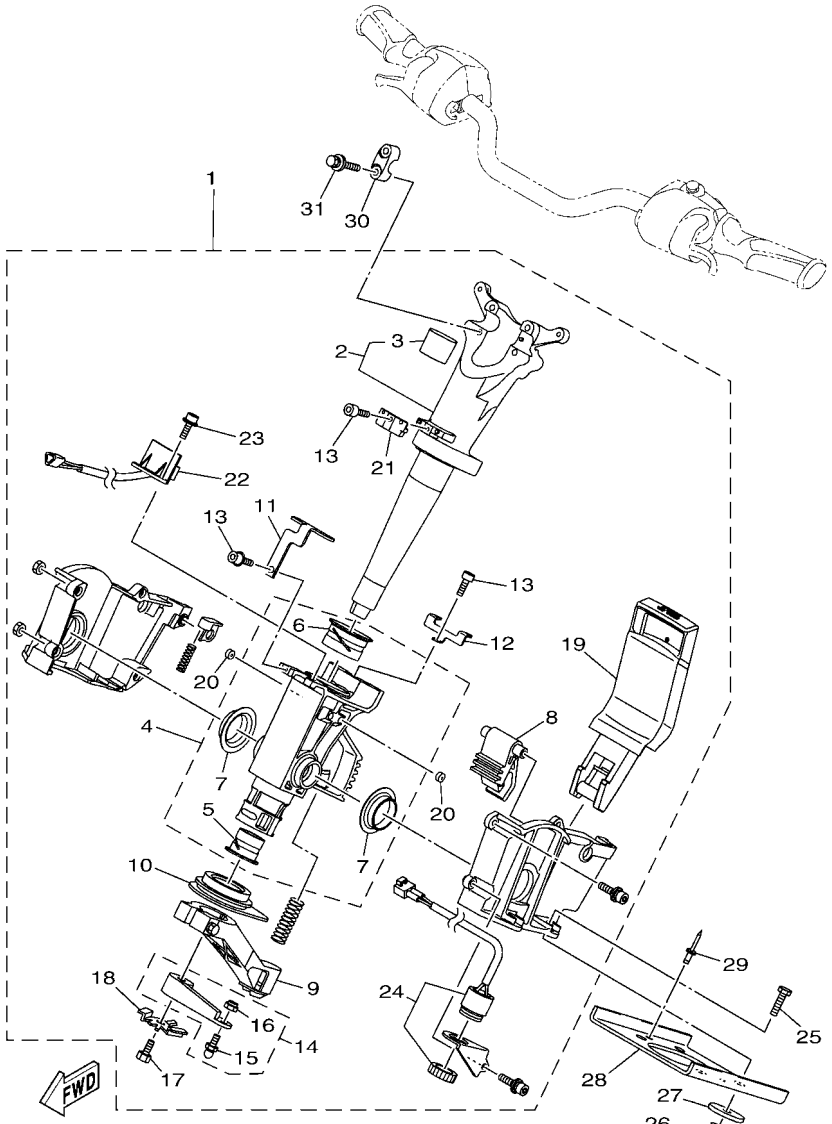

F5G1100-X390

FIG. 39 STEERING 2

REF. NO.	PART NO.	DESCRIPTION	F5G9					REMARKS
28	F1X–U1554–00	PLATE, RETAINING	1					
29	90267–489U6	RIVET, BLIND	2					
30	EU0–23814–31	HOLDER, HANDLE UPPER	2					
31	90119–089UU	BOLT, WITH WASHER	4					

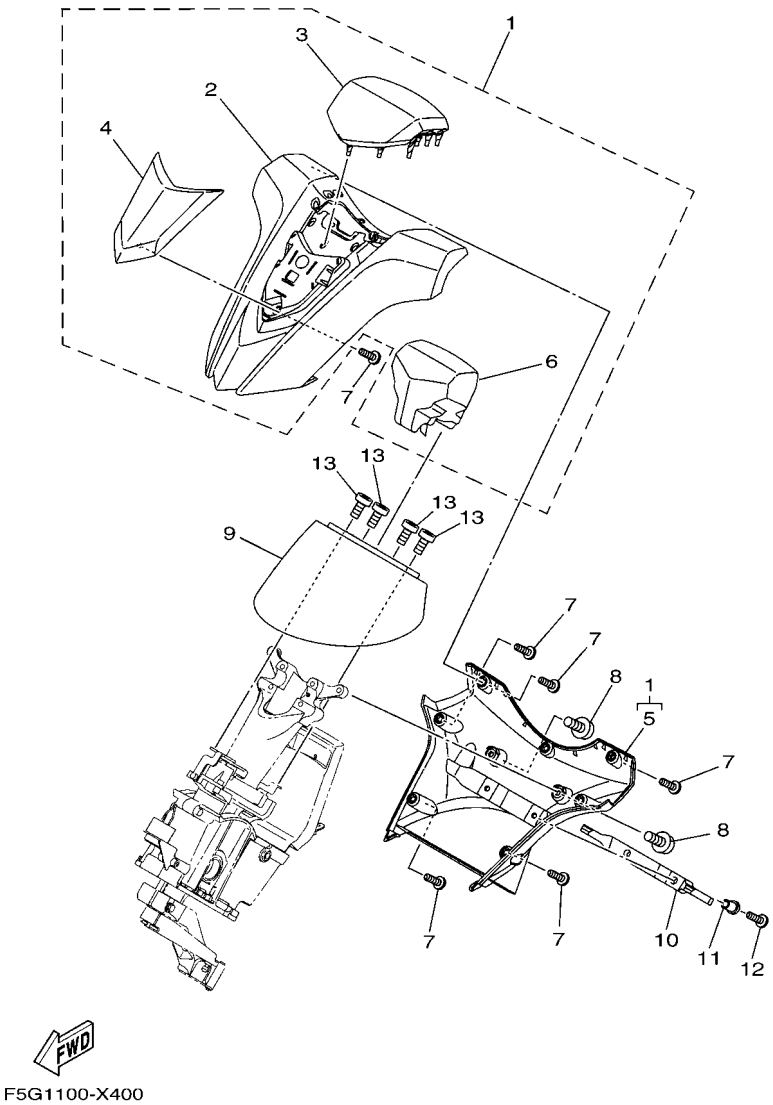

FIG. 40 STEERING 3

REF. NO.	PART NO.	DESCRIPTION	F5G9					REMARKS
1	F5G–U142A–00	STEERING PAD COMP	1					
2	F5G–U143D–00	.PAD, STEERING 1	1					
3	F3X–U142D–00	.COVER, PAD	1					
4	F3X–U142M–20	.BASE, PAD	1					
5	F5G–U143E–00	.PAD, STEERING 2	1					
6	F3X–U142E–00	.CUSHION, PAD 1	1					
7	F2S–U13C1–00	SCREW	7					
8	F3Y–U2624–00	BOLT	2					
9	F2S–U143L–01	PAD, STEERING 3	1					
10	F5G–UFTAA–00	HOOK,MOORING 1	1					
11	F5G–U151R–00	COLLAR	2					
12	F5G–U7823–00	SCREW	2					
13	90154–06030	SCREW, BINDING	4					

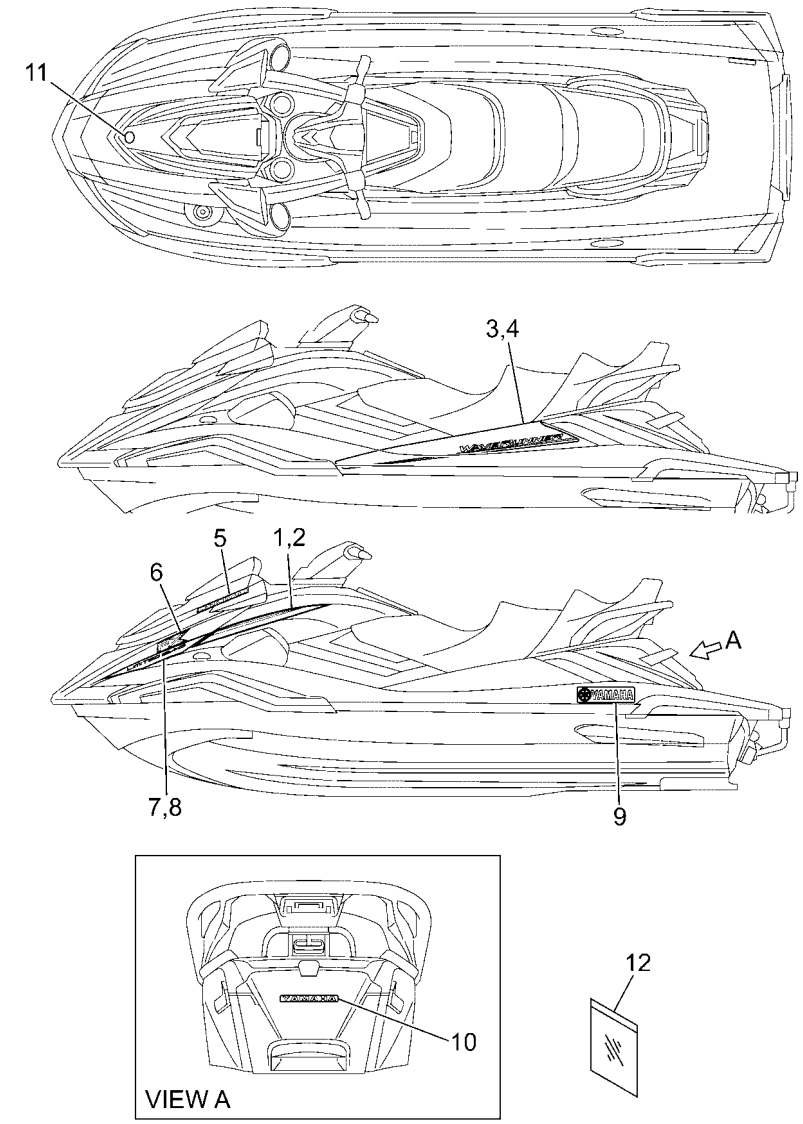

F5G9100-Z410

FIG. 41 GRAPHICS

REF. NO.	PART NO.	DESCRIPTION	F5G9					REMARKS
1	F5G–U417F–80	GRAPHIC 5 (LH)	1					
2	F5G–U417G–80	GRAPHIC 6 (RH)	1					
3	F5G–U417H–80	GRAPHIC 7 (LH)	1					
4	F5G–U417J–80	GRAPHIC 8 (RH)	1					
5	F5G–U417M–80	GRAPHIC C	2					
6	F5G–U417N–80	GRAPHIC D	2					
7	F5G–U417P–80	GRAPHIC E (LH)	1					
8	F5G–U417R–80	GRAPHIC F (RH)	1					
9	F3J–U4116–01	MARK, YAMAHA 3	2					
10	F5G–U4114–80	MARK, YAMAHA A	1					
11	F3Y–U411H–02	EMBLEM, TUNING FORK	1					
12	F3Y–U5901–00	BAG, VINYL	1					

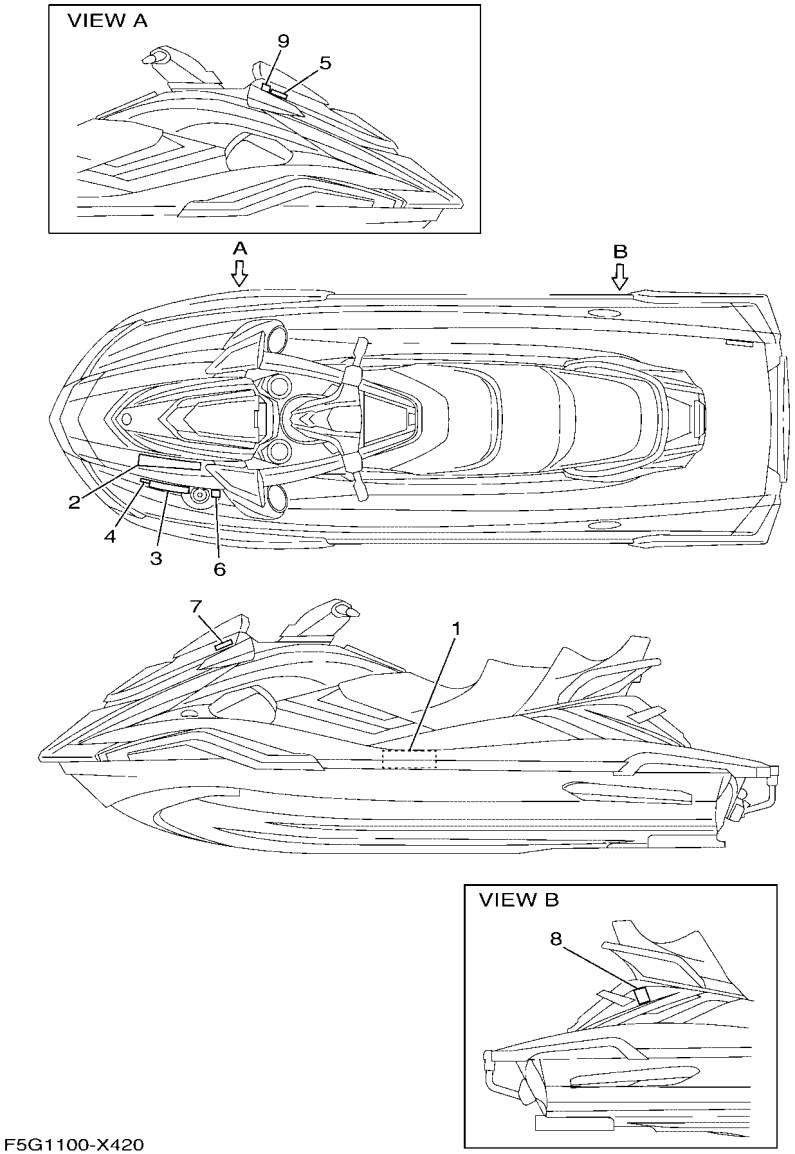

F5G1100-X420

FIG. 42 IMPORTANT LABELS

REF. NO.	PART NO.	DESCRIPTION	F5G9					REMARKS
1	F3V–U41B1–00	LABEL, WARNING UNIFORM 1	1					
2	F3V–U41B1–20	LABEL, WARNING UNIFORM 1	1					
3	F3J–U415B–10	LABEL, WARNING(FUEL)	1					
4	F3J–U419B–10	LABEL 1	1					
5	F1B–U41F5–21	LABEL, FIRE EXTINGUISHER 1	1					
6	B4F–F817K–00	LABEL, FUEL	1					FOR EUR
7	F1S–U419E–01	LABEL 4	1					FOR CAN
8	F3V–U416A–10	WARNING LABEL ASSY.	1					
9	F4G–U413P–30	LABEL, BUILDERS PLATE	1					FOR EUR

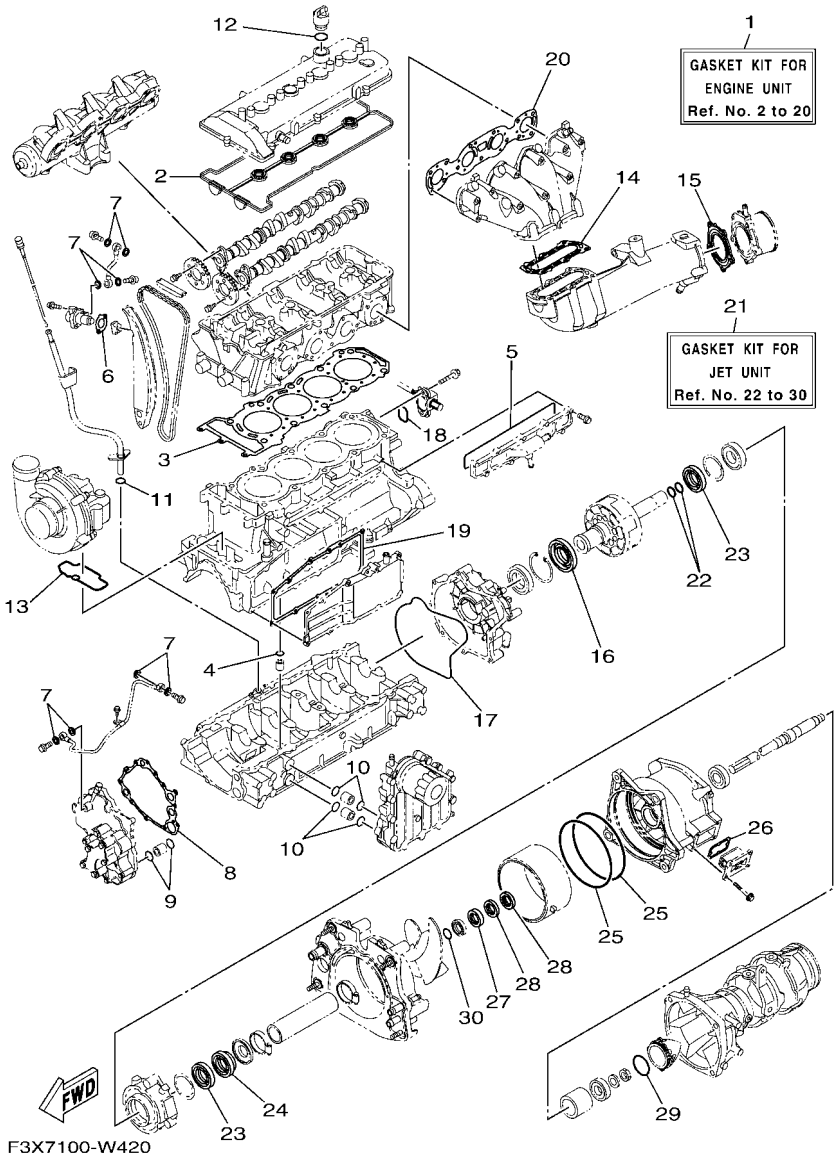

FIG. 43 REPAIR KIT 1

REF. NO.	PART NO.	DESCRIPTION	F5G9					REMARKS
1	6HL–W0001–01	GASKET KIT FOR ENGINE UNIT	1					
2	6BH–11193–00	.GASKET, HEAD COVER 1	1					
3	6JC–11181–00	.GASKET, CYLINDER HEAD 1	1					
4	93210–11453	.O-RING	1					
5	6CS–12517–00	.GASKET, WATER INLET	1					
6	6S5–121E2–00	.GASKET	1					
7	90430–10007	.GASKET	8					
8	6S5–13563–00	.GASKET	1					
9	93210–21631	.O-RING	2					
10	93210–18322	.O-RING	4					
11	93210–12016	.O-RING	1					
12	93210–24M79	.O-RING	1					
13	6S5–1416A–00	.O-RING	1					
14	6S5–14739–00	.GASKET, MUFFLER DAMPER 1	1					
15	6BH–14749–00	.GASKET, MUFFLER DAMPER 2	1					
16	6LE–81167–00	.OIL SEAL	1					
17	6S5–81168–00	.O-RING	1					
18	93210–32172	.O-RING	1					
19	6BH–13557–00	.GASKET	1					
20	6ET–14613–00	.GASKET, EXHAUST PIPE	1					
21	6GN–W0001–20	GASKET KIT FOR JET UNIT	1					
22	93210–22MF1	.O-RING	2					
23	93102–29008	.OIL SEAL	2					
24	93102–29009	.OIL SEAL	1					
25	93211–70800	.O-RING	2					
26	66V–42414–00	.O-RING	1					
27	93102–31009	.OIL SEAL	1					

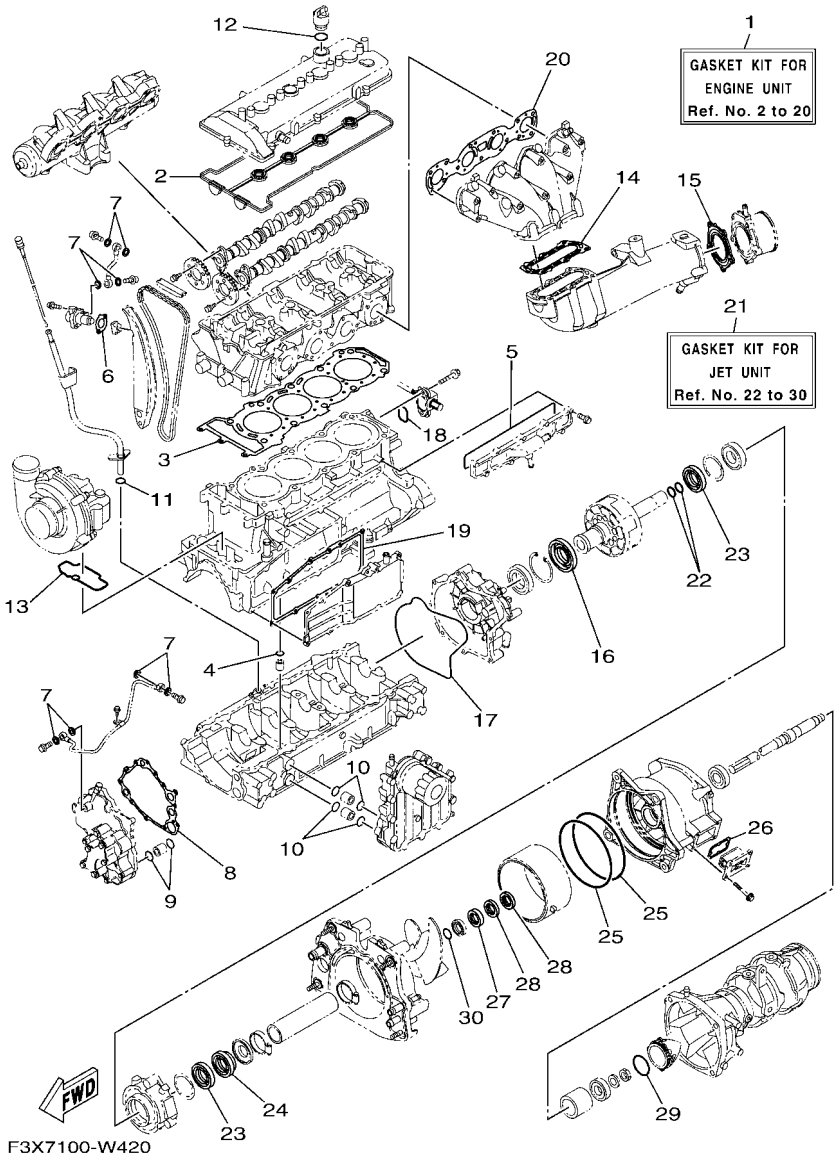

FIG. 43 REPAIR KIT 1

REF. NO.	PART NO.	DESCRIPTION	F5G9					REMARKS
28	93101–31001	.OIL SEAL	2					
29	93210–54010	.O-RING	1					
30	93210–30611	.O-RING	1					

PART NO.	REF. NO.
6S5–11102–20	2 – 2
6BH–1111E–00	2 – 11
6S5–11133–10	2 – 3
6S5–11166–10	12 – 1
6S5–11167–10	12 – 4
6JC–11181–00	2 – 10
	43 – 3
6BH–11191–20	1 – 1
6BH–11193–00	1 – 3
	43 – 2
69J–11301–11	3 – 9
6S5–1131M–10–8P	3 – 16
68V–11325–02	3 – 10
67F–11328–01	3 – 11
6S5–11377–00	3 – 15
6LE–11411–00	4 – 1
6LE–11416–00	4 – 2
6LE–11416–10	4 – 2
6LE–11416–20	4 – 2
6LE–11416–30	4 – 2
6LE–11416–40	4 – 2
6S5–11459–01	4 – 15
6S5–11603–01	4 – 4
6ET–11631–01–B0	4 – 3
6ET–11633–00	4 – 6
6S5–11650–10	4 – 8
6S5–11654–10	4 – 9
6LE–11656–00	4 – 10
6LE–11656–10	4 – 10
6LE–11656–20	4 – 10
6LE–11656–30	4 – 10
6S5–12111–00	5 – 5
6S5–12113–00	5 – 8
6S5–12116–00	5 – 7
6S5–12117–00	5 – 9
3LD–12118–00	5 – 10
51Y–12119–00	5 – 11
6S5–12121–00	5 – 6
6S5–12153–00	5 – 13
3LD–12168–00	5 – 12
3LD–12168–20	5 – 12
3LD–12168–40	5 – 12
3LD–12168–60	5 – 12
3LD–12168–80	5 – 12
3LD–12168–A0	5 – 12
3LD–12168–F0	5 – 12
3LD–12168–H1	5 – 12
3LD–12168–K1	5 – 12

PART NO.	REF. NO.
3LD–12168–M1	5 – 12
3LD–12168–R1	5 – 12
3LD–12168–U1	5 – 12
3LD–12168–W1	5 – 12
3LD–12168–Y1	5 – 12
3LD–12169–11	5 – 12
3LD–12169–31	5 – 12
3LD–12169–50	5 – 12
3LD–12169–70	5 – 12
3LD–12169–90	5 – 12
3LD–12169–E0	5 – 12
3LD–12169–G0	5 – 12
3LD–12169–J0	5 – 12
3LD–12169–L0	5 – 12
6S5–12171–10	5 – 1
6ET–12176–00	5 – 3
6ET–12181–00	5 – 2
6S5–121E2–00	5 – 19
	43 – 6
6S5–12210–02	5 – 18
6S5–12228–01	2 – 7
6BH–12241–00	5 – 25
6ET–12251–00	5 – 24
6ET–12252–00	5 – 15
6BH–12279–00	5 – 16
6S5–12289–00	4 – 12
6D3–12411–00	2 – 13
6BH–12413–00	2 – 14
6S5–1243E–01	14 – 6
6BH–1244H–00	14 – 16
6HL–12456–00	2 – 8
6CS–12469–A0	3 – 20
6CS–12517–00	3 – 21
	43 – 5
6CS–12552–00	14 – 21
6ET–12576–01	14 – 29
6S5–12576–01	14 – 33
6ET–12577–00	14 – 24
6S5–12578–00	2 – 16
6ET–12579–00	14 – 26
64T–12580–00	14 – 40
6ET–12581–10	14 – 39
6BH–12584–00	14 – 9
6CS–12588–00	14 – 18
6S5–12589–01	14 – 14
6S5–12594–00	14 – 32
6S5–12858–00	11 – 2
6CS–12880–00	6 – 6

PART NO.	REF. NO.
6S5–1310A–25	10 – 1
6BH–1319K–00	3 – 29
6S5–13300–22	9 – 1
6S5–13317–10	10 – 4
6S5–13337–10	3 – 23
6S5–13405–11	10 – 2
6HL–13416–00	9 – 7
6S5–13418–00	5 – 21
69J–13440–04	11 – 1
60E–13446–00	11 – 12
6S5–13446–10	9 – 5
6BH–13470–30	11 – 3
6S5–13477–00	10 – 3
69J–13532–00	6 – 16
6BH–13556–00	11 – 4
8FP–13556–10	6 – 12
6BH–13557–00	3 – 17
	43 – 19
6S5–13563–00	9 – 2
	43 – 8
6ET–13641–11	6 – 3
6HL–13651–01	7 – 24
6HL–13670–00	7 – 11
6S5–13691–12	7 – 12
6ET–13750–00	6 – 1
6ET–13761–00	6 – 10
6S5–13907–05	23 – 1
6ET–14156–00	6 – 5
6EY–14156–00	6 – 4
6S5–14159–01	6 – 17
68V–1416A–00	6 – 11
6S5–1416A–00	7 – 4
	43 – 13
6S5–14199–00	7 – 3
6HL–141A0–04	7 – 1
6S5–14243–01	7 – 18
6S5–14285–00	6 – 14
F4P–14305–12	38 – 14
6HL–14349–00	7 – 9
6S5–14435–01	7 – 17
6BH–14445–00	6 – 15
6CS–14445–01	6 – 26
6ET–14445–01	6 – 23
6CS–14446–00	6 – 7
6CS–14572–00	6 – 25
6ET–14572–00	6 – 22
6ET–14613–00	13 – 1
	43 – 20

PART NO.	REF. NO.
6BH–14711–11	13 – 2
6BH–14721–11	13 – 6
6S5–14739–00	13 – 7
	43 – 14
6BH–14749–00	13 – 14
	43 – 15
6CS–1475A–00	13 – 20
6S5–14771–00	13 – 11
6BH–14784–01	13 – 15
6CS–15100–20	3 – 1
6ET–15362–00	3 – 26
6S5–15363–00	1 – 7
6S5–15486–10	10 – 5
5EL–15511–00	20 – 6
6LE–15515–00	19 – 3
6S5–15517–00	19 – 5
6S5–15521–00	19 – 4
6S5–15590–00	19 – 1
6S5–17031–00	4 – 17
6S5–17525–01	4 – 14
6S5–17529–00	4 – 19
6S5–17553–00	4 – 23
6S5–17572–01	4 – 11
6S5–17585–10	4 – 22
6ET–17800–10	4 – 16
EU0–23814–31	39 – 30
70R–24489–00	34 – 4
6AN–2450B–10	6 – 18
70R–24543–00	34 – 3
F4P–26411–12	38 – 9
6EX–2812A–00	21 – 16
6BH–41661–00–94	25 – 4
6BH–41662–00–94	25 – 5
6R7–42316–00	37 – 62
	37 – 64
66V–42414–00	15 – 9
	43 – 26
67X–44517–10	25 – 1
663–45119–00	16 – 10
6ET–45613–00	16 – 8
6S5–45813–01–94	4 – 13
6BH–4581J–01	16 – 16
68N–5112T–00	28 – 10
F4P–60211–00	37 – 38
F3Y–60221–10	37 – 41
F5G–60222–00	37 – 52
F3J–60428–00	37 – 27
	37 – 28

PART NO.	REF. NO.
F4P–61256–00	37 – 23
F3Y–61344–00	37 – 42
	37 – 53
F4P–61344–00	37 – 44
	37 – 55
F3Y–61348–00	37 – 34
F4P–61348–00	37 – 47
F1S–6134M–00	39 – 5
F2C–6134M–00	39 – 6
F1S–6134M–10	39 – 7
F1W–61355–00	39 – 17
F4P–61368–00	38 – 11
	38 – 16
F4P–613A5–00	37 – 43
	37 – 54
F4P–613A5–10	37 – 40
	37 – 51
F3Y–613B3–00	37 – 24
F3J–613B4–00	37 – 33
	37 – 46
F3J–613B4–10	37 – 36
	37 – 49
F3J–613B4–20	37 – 22
F4P–613C1–00	39 – 13
F3J–613C3–10	37 – 26
F3J–613D0–00	37 – 15
F5G–61400–01	39 – 1
F7K–6140B–00	37 – 12
F1B–61425–00	37 – 6
F1W–6142B–00	39 – 18
F4P–61435–00	39 – 3
F1B–61438–00	37 – 2
F1S–6143C–00	39 – 10
F3Y–6143J–00	37 – 17
F2N–61460–00	37 – 5
EU0–61461–02	39 – 15
F1B–61461–02	37 – 4
F1S–6146A–00	39 – 9
F1S–61481–12	37 – 1
F3J–61492–00	37 – 37
	37 – 50
F3J–6150A–00	37 – 65
F3J–6150D–00	37 – 66
F5G–6150E–01	37 – 61
F3Y–6150F–00	37 – 63
F1W–61516–00	39 – 23
F2S–6151M–00	39 – 19
F1B–6151S–01	37 – 3

PART NO.	REF. NO.
F4P–6152K–00	37 – 13
F1S–6153R–02	39 – 14
F1K–61624–00	29 – 5
F0X–61637–00	29 – 8
EU0–61652–00	14 – 35
	28 – 2
F0X–61652–01	29 – 9
F1S–61782–00	39 – 8
EW2–62142–00	34 – 2
F1G–62149–00	34 – 8
F2F–6214A–00	34 – 1
GP7–62159–02	34 – 6
F3J–63262–00	37 – 14
F1W–6358B–00	39 – 20
F2S–6514S–00	27 – 35
F1W–6514T–00	27 – 36
GA7–65772–00	36 – 4
F5G–65938–00	39 – 11
F5G–65939–00	39 – 12
6CS–6725F–00	38 – 8
	38 – 18
F4P–6725F–00	38 – 10
	38 – 15
F3J–67369–00	37 – 16
F5G–67410–00	39 – 2
F4P–6773D–00	39 – 4
F2S–67743–01	34 – 42
	34 – 43
F1B–67747–00	34 – 20
EW2–67821–00	36 – 3
F7K–68197–00	37 – 19
F3J–68198–00	37 – 30
F3Y–68198–00	37 – 18
F3J–68198–20	37 – 25
	37 – 35
	37 – 48
F4P–68270–00	37 – 29
F3J–68273–00	37 – 31
F4P–68273–00	37 – 39
6S5–682E0–10	23 – 2
F7K–68310–21	38 – 7
F1S–68341–00	39 – 24
EW2–68348–00	38 – 13
F4P–68352–00	37 – 32
F2X–6838B–02	39 – 22
F2X–6838C–01	39 – 21
6LE–81167–00	19 – 13
	43 – 16

PART NO.	REF. NO.
6S5–81168–00	19 – 17
	43 – 17
6S5–81315–01	22 – 19
6S5–81328–00	19 – 18
6S5–81337–31	19 – 11
6S5–81364–11	19 – 24
6ET–81410–00	19 – 7
6S5–81450–01	19 – 6
6S5–81800–00	20 – 1
6S5–81810–00	20 – 13
6S5–81820–00	20 – 12
6S5–81826–00	20 – 10
6S5–81830–00	20 – 3
6S5–81840–00	20 – 8
11H–81844–00	20 – 2
4G0–81844–00	20 – 4
5EL–81845–00	20 – 11
6CS–81845–11	21 – 2
3TB–81847–00	20 – 9
1J7–81847–60	20 – 5
5A8–81850–10	20 – 14
F7K–81860–00	38 – 17
1B7–81940–00	21 – 25
6S5–81942–21	21 – 3
6ET–81948–00	21 – 8
6CS–81953–00	21 – 27
6EX–8195A–00	21 – 15
6EK–81960–10	22 – 1
6ET–81972–00	22 – 3
6ET–81975–01	22 – 2
6JP–82115–00	21 – 23
6JP–82116–00	23 – 32
6CS–82117–00	21 – 24
67F–82151–00	21 – 12
6EX–82151–00	21 – 14
67F–82151–10	21 – 13
67F–82151–30	21 – 10
67F–82151–40	21 – 11
6EX–82170–02	21 – 9
6S5–82310–10	22 – 8
61N–82317–01	1 – 4
6A0–82317–01	21 – 18
	37 – 21
6BH–82380–00	6 – 8
68V–82504–00	22 – 18
6S5–82509–00	6 – 2
60E–82556–10	23 – 3
6CR–82560–00	22 – 14
6ET–82576–00	21 – 20
1UA–82591–00	27 – 37
6EM–82599–00	21 – 30
F7K–8259E–00	38 – 12
6HL–8259L–20	21 – 29
6CS–8273J–11	22 – 22
60E–83627–00	21 – 4
6EY–84385–00	14 – 42
6CS–85516–00	3 – 30
6JC–8572F–00	3 – 28
6AN–85780–01	22 – 20
6AA–85790–00	22 – 26
61A–85790–01	22 – 12
6S5–85886–00	6 – 13
F4P–85887–00	37 – 45
60E–85896–02	22 – 16
6HL–8591A–10	21 – 5
6EY–8591S–00	21 – 7
6JN–E110M–00	1 – 9
6S5–E118E–02	1 – 11
6S5–E1328–00	1 – 10
6ET–E2289–00	16 – 12
67X–E2590–00	14 – 34
67X–E2590–10	14 – 34
6S5–E4410–02	8 – 6
6S5–E4419–00	8 – 12
6S5–E4436–00	8 – 8
6S5–E4451–01	8 – 7
6S5–E4752–01	13 – 17
B4F–F817K–00	42 – 6
6S5–G2717–00	8 – 9
6HL–G4532–00	25 – 2
6BH–G4574–00	25 – 3
6S5–G5332–00	16 – 3
6ET–G5511–00	15 – 16
6CS–G5538–00	15 – 12
6S5–G5593–00	16 – 11
6ET–G5831–20	15 – 1
6GN–G6882–00	15 – 8
5FU–H2100–20	23 – 4
F5G–H21E1–00	26 – 12
F5G–H254B–00	26 – 11
F5G–HA260–00	23 – 16
6S5–R1142–10	8 – 13
6AN–R1190–00	15 – 36
6HL–R1312–00	15 – 4
6S5–R1313–01	15 – 33
6ET–R1314–10	17 – 4
6ET–R1318–00	15 – 25
6ET–R1321–10	15 – 22
6S5–R1323–00	16 – 1
6ET–R1326–00	15 – 19
6ET–R1333–00	18 – 10
6GN–R1337–00	15 – 6
6ET–R1341–10	17 – 1
6ET–R1342–10	17 – 2
6BH–R1348–00	15 – 23
6S5–R1381–01	16 – 15
6EY–R1959–00	18 – 1
6S5–R2358–00	17 – 11
F5G–U0210–00	26 – 14
F5G–U0229–00	24 – 6
	24 – 12
F5G–U0392–00	24 – 17
F5G–U0392–10	24 – 21
F5G–U0891–00	23 – 21
F3X–U1273–00	14 – 1
F3X–U1338–00	26 – 33
F4F–U1338–00	28 – 16
F3X–U1355–00	26 – 35
F5G–U1369–00	24 – 4
	24 – 10
	24 – 16
	24 – 20
F5G–U1395–01	26 – 15
F3X–U13B4–00	33 – 12
	33 – 21
	33 – 24
F2S–U13C1–00	26 – 38
	27 – 18
	27 – 22
	27 – 24
	29 – 24
	33 – 26
	33 – 27
	40 – 7
F5G–U142A–00	40 – 1
F3X–U142D–00	40 – 3
F3X–U142E–00	40 – 6
F2N–U142L–00	23 – 10
	23 – 19
	26 – 44
	26 – 49
	26 – 54
	26 – 59
	27 – 8
F2N–U142L–00	30 – 3
	30 – 15
	30 – 23
	30 – 28
	30 – 33
	30 – 36
	36 – 22
F3Y–U142L–00	27 – 42
	28 – 30
	32 – 19
	33 – 7
	33 – 19
	37 – 60
	39 – 26
F3X–U142M–20	40 – 4
F5G–U143D–00	40 – 2
F5G–U143E–00	40 – 5
F5G–U143K–00	24 – 5
	24 – 11
F2S–U143L–01	40 – 9
F3Y–U1454–00	29 – 27
F4P–U1454–00	27 – 45
	27 – 47
6ET–U1461–10	15 – 37
6GA–U1461–10	17 – 14
F2S–U1516–00	38 – 6
F3X–U151R–00	26 – 34
F5G–U151R–00	40 – 11
F3Y–U153K–00	27 – 11
F5G–U1552–00	38 – 1
F1X–U1554–00	39 – 28
F4P–U155C–00	38 – 2
F4P–U155D–00	38 – 3
F2N–U1628–10	29 – 1
F3J–U1629–00	33 – 10
F4G–U163A–02	29 – 25
F1B–U1653–03	29 – 4
F5G–U1708–01	26 – 7
F2C–U1743–00	26 – 39
F7K–U1743–00	23 – 13
F5G–U2119–00	26 – 30
F2N–U2127–00	31 – 3
F2N–U213G–02	31 – 5
6ET–U215E–00	15 – 28
F3X–U2187–00	31 – 1
F3X–U2188–00	31 – 2
F3X–U2249–10	35 – 8
	35 – 20
F3X–U224B–00	35 – 1
F3X–U224C–00	35 – 2
F4P–U2255–00	35 – 17
F1S–U2280–02	28 – 22
F2S–U2284–01	33 – 18
F4G–U2284–10	29 – 26
F1S–U2285–01	28 – 23
F3X–U2511–01	30 – 1
F3X–U2512–00	30 – 4
F3X–U2514–R0	30 – 9
F3X–U2514–S0	30 – 17
F3X–U2519–C0	30 – 5
F3X–U251D–00	30 – 24
F3X–U251E–00	30 – 29
F3X–U252C–01	30 – 34
F3X–U252E–00	30 – 8
F3X–U252F–00	30 – 16
F3X–U255C–R0	30 – 25
F3X–U255C–S0	30 – 30
F3Y–U2624–00	40 – 8
F2S–U2624–01	33 – 17
F3X–U264L–01	33 – 28
F3X–U264L–11	33 – 29
F3X–U2663–10	27 – 10
F3X–U2664–01	32 – 3
F1K–U266C–10	26 – 1
F3X–U266D–01	32 – 8
F2C–U266E–00	32 – 23
F1W–U269B–00	28 – 1
F3X–U271B–00	33 – 1
F2S–U271F–01	33 – 16
F3X–U2723–00	26 – 8
F2C–U2733–00	36 – 15
F5G–U273B–00	18 – 6
F3X–U278A–00	29 – 16
F2S–U278F–01	29 – 17
F2S–U278H–01	29 – 18
F5G–U2811–01	26 – 13
F4N–U2875–00	26 – 22
F3X–U3222–00	27 – 6
	27 – 7
F3V–U351H–00	30 – 38
F3V–U351J–00	30 – 39
F3X–U351K–00	30 – 40
F3X–U351M–00	30 – 41
F3X–U351N–00	30 – 42
F3X–U351P–00	30 – 43
F3X–U3581–01	30 – 37
F3X–U370J–H0	26 – 50
F3X–U370K–H0	26 – 55
F3X–U371A–Y0	32 – 1
F3X–U371B–Y0	32 – 2
F3X–U372A–Y0	32 – 6
F3X–U372B–Y0	32 – 7
F2S–U375E–00	32 – 16
F1W–U3768–01	26 – 41
	26 – 46
	33 – 14
GH1–U3774–00	32 – 12
	33 – 2
F5G–U377B–01–P7	26 – 40
F5G–U377C–01–P7	26 – 45
F5G–U3844–00	26 – 31
F2C–U3850–00	32 – 4
	32 – 9
F5G–U4114–80	41 – 10
F3J–U4116–01	41 – 9
F3Y–U411H–02	41 – 11
F4G–U413P–30	42 – 9
F3J–U415B–10	42 – 3
F3V–U416A–10	42 – 8
F5G–U417F–80	41 – 1
F5G–U417G–80	41 – 2
F5G–U417H–80	41 – 3
F5G–U417J–80	41 – 4
F5G–U417M–80	41 – 5
F5G–U417N–80	41 – 6
F5G–U417P–80	41 – 7
F5G–U417R–80	41 – 8
F3J–U419B–10	42 – 4
F1S–U419E–01	42 – 7
F3V–U41B1–00	42 – 1
F5G–U41B1–00	26 – 21
F3V–U41B1–20	42 – 2
F1B–U41F5–21	42 – 5
F5G–U4256–00	23 – 30
F3X–U4261–00	36 – 9
F5G–U4705–01	26 – 20
F3X–U475B–00	27 – 44
F3X–U475F–00	27 – 46
F3X–U491K–00	27 – 41
F1W–U491K–01	30 – 2
	30 – 10
	30 – 18
	30 – 26
	30 – 31

PART NO.	REF. NO.
F1W–U491K–01	30 – 35
F3X–U4949–00	30 – 13
	30 – 21
GP7–U4953–10	29 – 3
	33 – 9
F3X–U4994–00	29 – 22
F3X–U513M–02–PC	27 – 1
F3X–U5148–00	27 – 12
F5G–U515C–00	26 – 17
F0X–U515E–02	27 – 20
F5G–U515N–02–P7	27 – 19
F5G–U515P–01	27 – 23
F4P–U516R–01	26 – 6
	26 – 66
	26 – 68
F2X–U5175–00	26 – 26
	26 – 52
	26 – 57
F5G–U517B–01–P6	27 – 16
F3X–U517C–00	27 – 13
F3X–U517D–01	27 – 5
F3X–U517E–00	26 – 3
	26 – 9
	26 – 23
	26 – 42
	26 – 47
	27 – 17
	33 – 13
	33 – 22
	33 – 25
F5G–U517F–02	26 – 2
F5G–U517R–00	26 – 16
F5G–U517V–01	27 – 21
F3X–U518E–00	27 – 3
F3X–U518M–01–PB	33 – 15
F5G–U5193–00	27 – 26
	27 – 31
F5G–U519D–01	26 – 18
F5G–U519F–00	27 – 15
F5G–U519G–02	27 – 9
F5G–U5554–02	26 – 25
F1K–U5772–04	26 – 63
	34 – 40
F3Y–U5901–00	41 – 12
F3X–U590D–D0	27 – 25
F3X–U590E–D0	27 – 30
F2C–U591A–03	32 – 20
F2C–U591C–00	32 – 21

PART NO.	REF. NO.
F2C–U591D–01	32 – 22
F5G–U591L–00	26 – 10
F1K–U5983–01	26 – 61
F5G–U6829–00	26 – 51
	26 – 56
F5G–U6829–09	26 – 32
	26 – 43
	26 – 48
	26 – 53
	26 – 58
	27 – 27
	27 – 32
F1W–U725E–00	39 – 27
F1S–U725E–01	18 – 3
F2S–U72C0–01	18 – 2
6CS–U72M2–00	15 – 42
F2M–U732B–00	25 – 16
F2S–U732B–00	25 – 12
F2S–U732B–10	25 – 14
EU0–U7354–00–01	25 – 9
EU0–U7354–00–03	25 – 9
EU0–U7354–00–05	25 – 9
EU0–U7354–00–10	25 – 9
EU0–U7354–00–20	25 – 9
F1B–U751G–10	36 – 21
F2S–U7525–01	14 – 36
F2C–U753B–01	36 – 13
F4P–U7550–00	36 – 1
F3X–U7555–00	36 – 6
F2C–U7557–01	18 – 14
F3X–U7564–00	35 – 3
F2C–U7564–01	36 – 14
GJ1–U7578–12	24 – 2
	24 – 8
GJ1–U7578–22	23 – 22
	23 – 29
	37 – 9
F1S–U757B–01	36 – 20
F3X–U758D–00	36 – 11
F2S–U759B–00	34 – 44
F1K–U759C–00	26 – 60
	34 – 46
	34 – 47
F1W–U759C–01	34 – 45
F3X–U7617–00	35 – 6
F1B–U761D–02	28 – 7
F3X–U7626–10	35 – 10
F3X–U7628–10	35 – 9

PART NO.	REF. NO.
F3X–U7629–10	35 – 7
F4P–U7711–00	34 – 15
6EX–U773D–00	35 – 14
F2T–U773D–00	14 – 7
F3J–U773D–00	14 – 22
F4L–U773D–00	34 – 38
6CN–U773D–01	15 – 26
F3X–U7767–00	35 – 5
F3Y–U7767–00	34 – 32
F1B–U7773–00	34 – 19
F5G–U7823–00	40 – 12
F3X–U7823–12	30 – 11
	30 – 19
	30 – 27
	30 – 32
F2N–U7831–10	34 – 22
GP7–U7832–01	34 – 23
GP7–U7833–11	34 – 24
GP7–U7834–00	34 – 27
GP7–U7835–00	34 – 25
GP7–U783F–00	34 – 29
F3X–U7844–01	34 – 30
F0D–U7856–10	34 – 39
F3X–U7857–00	35 – 4
F4P–U785G–00	34 – 16
F0D–U785G–10	34 – 36
GP7–U785H–00	34 – 33
F5G–U8090–01	23 – 20
F5G–U8102–00	24 – 1
F5G–U8103–00	24 – 7
F4P–U8167–10	34 – 17
F2N–U8169–10	29 – 15
F7K–U8198–00	30 – 12
	30 – 20
F5G–U81AJ–01	24 – 13
F7K–U820A–00	23 – 15
F2S–U8211–00	23 – 8
F4P–U821D–00	23 – 14
F1S–U8221–00	23 – 11
	36 – 2
	36 – 10
EU0–U8221–31	23 – 12
F3J–U822E–01	37 – 11
F2S–U8244–00	32 – 17
F5G–U8262–01	26 – 36
F2C–U826C–00	26 – 5
F5G–U826C–00	23 – 17
F1K–U826C–03	28 – 28

PART NO.	REF. NO.
F1X–U826D–01	29 – 28
F5G–U826F–01	26 – 37
F5G–U8275–01	24 – 14
F5G–U827A–00	23 – 24
F4P–U8285–00	37 – 56
F5G–U828E–00	26 – 29
F2P–U828K–00	26 – 62
F1W–U828M–00	23 – 26
	28 – 17
	31 – 7
	34 – 9
	34 – 12
	35 – 13
	36 – 17
	37 – 68
F3X–U8377–00	35 – 19
F1G–U8571–02	18 – 12
F1B–U8572–01	18 – 8
F1W–U8572–01	28 – 27
F2S–U8577–00	18 – 9
F2S–U8592–00	23 – 5
F2S–U8593–00	23 – 6
F3X–U882F–02	29 – 20
F2S–U883B–00	16 – 19
F2S–U883E–00	16 – 20
F1S–U883N–01	29 – 11
F1S–U883P–01	29 – 12
F1X–U883T–02	29 – 13
F3X–U884R–01	29 – 21
F2S–U890L–05	32 – 11
F3X–U890M–E0	33 – 20
F3X–U890N–E0	33 – 23
F3X–U892D–00	16 – 23
F3X–U89A1–00–P7	33 – 11
F5G–U974A–00	26 – 65
F5G–U974B–00	26 – 67
F5G–UE6GA–01	24 – 15
F5G–UE6GA–11	24 – 19
F5G–UFTAA–00	40 – 10
6HL–W0001–01	43 – 1
6GN–W0001–20	43 – 21
6ET–W009A–20–94	2 – 1
6CS–W009B–21–94	3 – 4
6S5–W1783–20	4 – 18
90101–08069	39 – 25
90105–05020	7 – 2
90105–06028	1 – 2
90105–06035	2 – 15

PART NO.	REF. NO.
90105–06184	11 – 6
90105–06185	11 – 7
90105–06903	22 – 9
90105–06M07	3 – 12
90105–07006	5 – 4
90105–07009	2 – 6
90105–08021	3 – 34
90105–08054	11 – 9
90105–08169	11 – 10
90105–08170	11 – 11
90105–08243	6 – 9
90105–08249	19 – 15
90105–08860	29 – 14
90105–10071	3 – 5
90109–06218	27 – 38
90109–06268	3 – 33
90109–06832	16 – 21
90109–06874	25 – 10
90109–06875	25 – 11
90109–08041	18 – 18
90110–06040	29 – 10
90110–06182	3 – 24
90110–06382	38 – 4
90110–06404	9 – 4
90110–06822	15 – 21
90110–06897	37 – 58
90110–08212	19 – 2
90111–06873	26 – 24
90116–08032	6 – 20
90116–10044	7 – 19
90119–059U4	27 – 14
90119–06078	2 – 12
90119–06311	21 – 17
90119–06820	27 – 28
	27 – 33
90119–06832	23 – 9
	26 – 28
90119–06880	26 – 4
90119–06882	24 – 18
	24 – 22
90119–06889	15 – 10
90119–06891	16 – 14
	17 – 3
90119–06893	15 – 5
	37 – 57
90119–06896	27 – 43
90119–069UH	27 – 40
	29 – 23

PART NO.	REF. NO.
90119–069UP	32 – 5
	32 – 10
90119–069UX	17 – 7
90119–06MA3	22 – 24
90119–06MA4	22 – 4
90119–08034	13 – 4
	13 – 10
90119–08096	13 – 12
90119–08097	13 – 5
	13 – 9
90119–08187	8 – 3
	22 – 6
90119–08822	26 – 19
90119–08823	18 – 7
	18 – 11
	18 – 13
	25 – 8
90119–08828	32 – 18
90119–08829	33 – 6
90119–08840	17 – 5
90119–08851	15 – 34
	15 – 40
	37 – 59
90119–08859	25 – 7
90119–08861	29 – 19
90119–089U7	18 – 15
90119–089UT	21 – 1
90119–089UU	16 – 13
	39 – 31
90119–10011	7 – 23
90119–10046	7 – 15
90119–10047	7 – 14
90119–10076	13 – 13
90119–10810	15 – 3
	15 – 32
90149–06229	19 – 8
90149–10068	25 – 6
90154–06030	40 – 13
90169–049U1	34 – 26
90176–08080	6 – 21
90176–10001	7 – 20
90201–052E8	19 – 21
90201–06028	7 – 8
	10 – 8
90201–06801	17 – 9
	17 – 12
90201–068G0	27 – 29
	27 – 34

PART NO.	REF. NO.
90201–068G0	38 – 5
90201–068M4	15 – 38
90201–06906	37 – 7
90201–10801	18 – 4
90201–109U6	32 – 13
	33 – 3
90201–132G5	4 – 20
90267–329UR	34 – 28
90267–48802	28 – 20
	35 – 15
	37 – 69
90267–48806	23 – 28
	23 – 31
	27 – 4
	28 – 19
	31 – 4
	31 – 8
	34 – 11
	34 – 14
	36 – 18
90267–489U1	23 – 7
	23 – 18
	26 – 27
	26 – 64
	28 – 29
	34 – 41
	36 – 5
90267–489U2	25 – 13
	25 – 15
	25 – 17
	34 – 5
90267–489U6	27 – 2
	30 – 14
	30 – 22
	34 – 7
	39 – 29
90267–489U8	28 – 8
	30 – 6
90280–03047	19 – 10
90387–06119	1 – 5
	21 – 19
	37 – 20
90387–06289	16 – 18
90387–06319	17 – 8
90387–06M05	19 – 22
	21 – 22
90387–08M06	15 – 35
	15 – 41
90387–08M30	17 – 6
90387–08M37	8 – 2
	22 – 5
90387–11007	7 – 16
90387–11008	7 – 21
90401–10040	5 – 23
	9 – 8
90430–06232	11 – 8
90430–06M03	3 – 13
90430–08209	10 – 10
90430–10007	5 – 22
	9 – 9
	43 – 7
90430–12002	18 – 16
90445–18012	14 – 10
90445–20800	28 – 12
90445–20804	28 – 11
90445–21807	14 – 4
90446–27M55	28 – 14
90446–27M73	28 – 13
90447–15001	15 – 30
90447–19005	14 – 11
90447–19018	14 – 19
90447–19801	14 – 3
90447–22015	12 – 2
90447–22016	12 – 5
90447–22801	14 – 2
90447–22802	14 – 5
90447–28008	2 – 17
90450–75003	7 – 10
	7 – 25
90450–90002	7 – 26
	8 – 4
	8 – 5
90450–99801	36 – 7
	36 – 12
90450–99804	36 – 8
90450–99808	13 – 18
90450–99809	13 – 19
90464–20008	22 – 25
90464–24003	14 – 43
90464–31001	22 – 21
	22 – 27
90464–31002	22 – 28
90464–32801	23 – 23
	23 – 25
	23 – 27
	24 – 3
90464–32801	24 – 9
	28 – 21
	28 – 31
	34 – 10
	34 – 13
	35 – 11
	36 – 19
	37 – 10
	37 – 67
	37 – 70
90464–35132	14 – 13
	22 – 11
90464–99804	31 – 6
90465–11829	15 – 29
	34 – 34
	34 – 35
	34 – 37
90465–14M66	21 – 31
90467–141A3	14 – 17
90467–150A1	3 – 31
90467–150A5	14 – 41
	36 – 16
90467–160A0	14 – 12
	14 – 20
	14 – 25
	14 – 27
	14 – 30
90467–170A4	14 – 23
90467–170A5	14 – 28
90467–17802	35 – 16
90467–180A5	28 – 6
	28 – 15
90467–190A0	12 – 3
	12 – 8
90467–190A2	34 – 18
90467–200A3	12 – 7
	14 – 8
	14 – 15
	14 – 31
	14 – 37
	14 – 38
	28 – 4
90467–240A0	2 – 18
	12 – 6
90467–240A3	28 – 5
90480–21M63	7 – 22
90480–22801	8 – 11
90480–22M15	8 – 1
90480–22M15	22 – 7
90601–118UF	15 – 27
	28 – 3
90601–152U3	16 – 22
90601–155U4	34 – 31
90601–200U1	28 – 9
	35 – 12
	35 – 18
	35 – 21
91314–06060	10 – 7
91317–05010	19 – 20
91317–06014	19 – 19
91380–04030	38 – 19
91380–06016	22 – 17
91380–06020	19 – 23
91380–06025	5 – 20
91809–16002	2 – 4
	2 – 5
92014–06030	5 – 17
92903–08600	20 – 16
92990–06100	20 – 17
92990–10600	22 – 13
92990–12200	18 – 17
	29 – 7
92990–20600	15 – 17
9299R–05200	28 – 18
	28 – 25
	30 – 7
9299R–10200	32 – 14
	33 – 4
93101–31001	15 – 15
	43 – 28
93102–29008	16 – 4
	43 – 23
93102–29009	16 – 7
	43 – 24
93102–31009	15 – 14
	43 – 27
93210–06632	3 – 27
93210–11453	3 – 3
	43 – 4
93210–12016	3 – 32
	43 – 11
93210–18322	11 – 13
	43 – 10
93210–21631	9 – 6
	43 – 9
93210–22MF1	16 – 2
93210–22MF1	43 – 22
93210–24M79	1 – 8
	43 – 12
93210–30611	15 – 24
	43 – 30
93210–32172	22 – 23
	43 – 18
93210–54010	15 – 20
	43 – 29
93211–70800	15 – 7
	43 – 25
93306–00809	19 – 12
93306–206Y7	15 – 11
93306–206Y8	16 – 6
93306–355Y0	15 – 13
93410–12003	20 – 7
93450–22174	4 – 5
	4 – 7
93604–10M03	3 – 8
	7 – 5
	11 – 5
93606–12019	3 – 7
	9 – 3
	13 – 8
	15 – 31
	16 – 17
93608–16M16	13 – 3
93700–06M03	16 – 9
94591–74152	5 – 14
94702–00435	22 – 10
95312–20700	15 – 18
95380–06600	17 – 10
	17 – 13
95380–06700	15 – 39
	20 – 18
9538R–06700	37 – 8
95720–06300	27 – 39
	39 – 16
9572R–05300	28 – 26
9572R–06300	34 – 21
9572R–08300	29 – 2
	33 – 8
9572R–10300	18 – 5
	32 – 15
	33 – 5
95814–06012	21 – 6
	21 – 28
95814–06035	3 – 22
95814–06070	3 – 6
95814–08020	10 – 9
95814–08055	7 – 6
95817–06014	10 – 6
95824–06025	1 – 6
95E33–06012	6 – 24
	6 – 27
	9 – 10
95E34–06014	3 – 18
95E34–06020	3 – 19
	10 – 12
95E34–06035	10 – 11
95E34–06065	7 – 7
95E34–08035	13 – 16
97013–08030	20 – 15
97513–05514	19 – 9
97513–06555	2 – 9
97513–08535	6 – 19
97780–60025	21 – 21
97780–60516	8 – 10
9788R–05025	28 – 24
97E95–06516	22 – 15
97E95–06612	21 – 26
97E95–08540	3 – 14
99009–24700	4 – 21
99009–62500	16 – 5
99009–72500	19 – 14
99530–10114	3 – 2
	3 – 25
	19 – 16
99590–14016	7 – 13
	15 – 2
99780–12600	29 – 6