YAMAHA

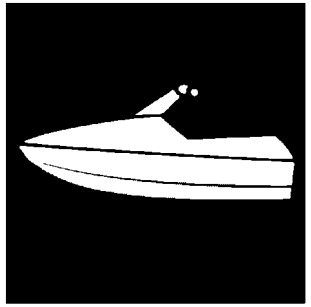

PARTS CATALOGUE

WaveRunner JETBLASTER DLX
JB1050D-C (F5S2 /6GAV/6MP1)

YAMAHA
GENUINE
Parts & Accessories

31F5S-100E1

( )

JB1050D-C
PARTS CATALOGUE
©2026 by Yamaha Motor Co., Ltd.
1st edition, January 2026
All rights reserved.
Any reprinting or unauthorized use
without the written permission of
Yamaha Motor Co., Ltd.
is expressly prohibited.
Printed in Japan.

FOREWORD

This Parts Catalogue is related to the parts for the model(s) on the cover page. When you are ordering replacement parts, please refer to this Parts Catalogue and quote both part numbers and part names correctly.

1. Modifications or additions which have been made after the issue of the Parts Catalogue will be announced in the Parts News.
   It is advisable that you make the necessary corrections to the Parts Catalogue according to the Parts News.

2. Abbreviations
   The following abbreviations are used in this Parts Catalogue.

   “UR” Use specified parts number.

   “UN” Use as many as needed.

   “AP” Alternate Parts

   “LM” Locally Made (Parts need to be ordered locally)

   “F#” Frame No. (Applicable machine No.)

   “O/S” Over Size

3. The number of components for assembly
   - Parts, which are to be supplied in an assembly, are listed with a dot (.) in front of the part name as shown below.
   - The numeral appearing to the right of each component part indicates the quantity of parts for each assembly unit.

PART NO.	DESCRIPTION	Q’TY	REMARKS
2F5–83310–60	FRONT FLASHER LIGHT ASSY	2	
115–83311–60	.BULB (6V–18W)	1	

4. Applicable colours of graphics are represented in the “REMARKS” as shown below.

PART NO.	DESCRIPTION	Q’TY	REMARKS
2N4–24110–00–X5	FUEL TANK COMP.	2	MXR
3J1–24240–10	.GRAPHIC, FUEL TANK	1	FOR MXR

5. Note that the illustrations for reference in finding parts numbers are not to be used for assembling. When assembling, please use the applicable service manual.

6. The asterisk (*) before a reference number indicates modified items after the first edition.

7. Applicable Serial No.

Engine Serial No.

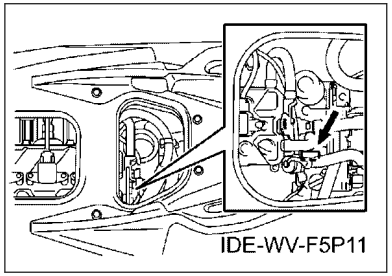

Primary Identification No.

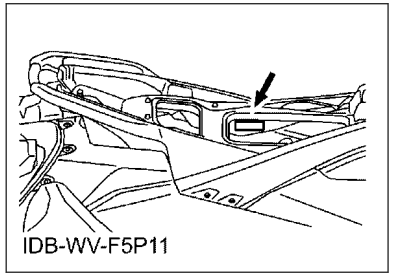

8. Applicable Colour Code (The (*) mark shows Model colour.)

Abbreviation	Colour Name	Colour Code
LB3(*)	LIGHT BLUE 3	1977

9. Quantity Column Information

Column No.	Name Of Q'ty Column	Destination
1	F5S2	CANADA, EUROPE

10. Applicable Starting Serial No.

Engine Serial No.

Serial No.	Name Of Q'ty Column	Model Code

Primary Identification No.

Serial No.	Name Of Q'ty Column	Model Code
F5S-801221	F5S2	F5S2

CONTENTS

CYLINDER....1
CRANKCASE.... 2
CRANKSHAFT & PISTON....4
VALVE.... 6
INTAKE....8
INTAKE 2....9
OIL PUMP....10
OIL COOLER....11
EXHAUST 1....13
EXHAUST 2....14
JET UNIT 1....16
JET UNIT 2....18
JET UNIT 3....19
GENERATOR....20
STARTING MOTOR.... 21
ELECTRICAL 1....22
ELECTRICAL 2....24
ELECTRICAL 3....25
ENGINE MOUNT....27
ENGINE HATCH 1....28
ENGINE HATCH 2....29
ENGINE HATCH 3....31
HULL & DECK.... 33
DECK 1....35
GUNWALE & MAT....36
VENTILATION.... 38
SEAT & UNDER LOCKER.... 39
FUEL TANK....41
EXHAUST 3....43
CONTROL CABLE.... 44
STEERING 1.... 46
STEERING 2.... 47
STEERING 3.... 48
GRAPHICS....49
IMPORTANT LABELS....50
REPAIR KIT 1....51

INDEX

NUMERICAL INDEX....52

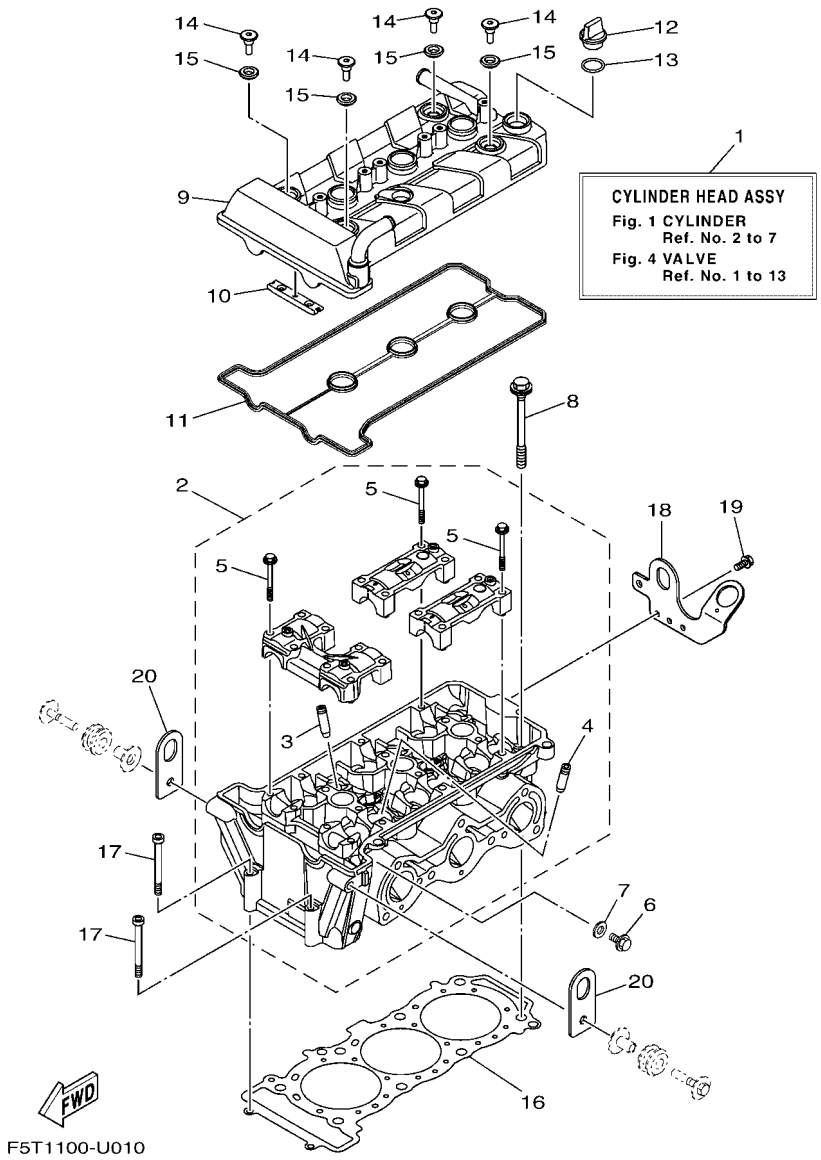

FIG. 1 CYLINDER

REF. NO.	PART NO.	DESCRIPTION	F5S2					REMARKS
1	6EY–11110–00	CYLINDER HEAD COMPLETE	1					
2	6EY–11102–00	CYLINDER HEAD ASSY	1					
3	2C0–11133–11	.GUIDE, VALVE 1	6					
4	8HF–11134–10	.GUIDE, VALVE 2	6					
5	90105–06027	.BOLT, FLANGE	16					
6	95E34–08012	BOLT, FLANGE DEEP RECESS	1					
7	90430–08119	GASKET	1					
8	90119–10004	BOLT, WITH WASHER	8					
9	6EY–11191–10	COVER, CYLINDER HEAD 1	1					
10	5BE–12241–01	GUIDE, STOPPER 2	1					
11	6EY–11193–00	GASKET, HEAD COVER 1	1					
12	3Y1–15363–10	PLUG, OIL	1					
13	93210–19123	O-RING	1					
14	90109–066F0	BOLT	4					
15	5VY–1111G–00	RUBBER, MOUNT 1	4					
16	6EY–11181–01	GASKET, CYLINDER HEAD 1	1					
17	91314–06065	BOLT, HEXAGON SOCKET HEAD	2					
18	6EY–1111E–10	HANGER, ENGINE 2	1					
19	90119–06078	BOLT, WITH WASHER	2					
20	6EY–11119–00	HANGER, ENGINE	2					

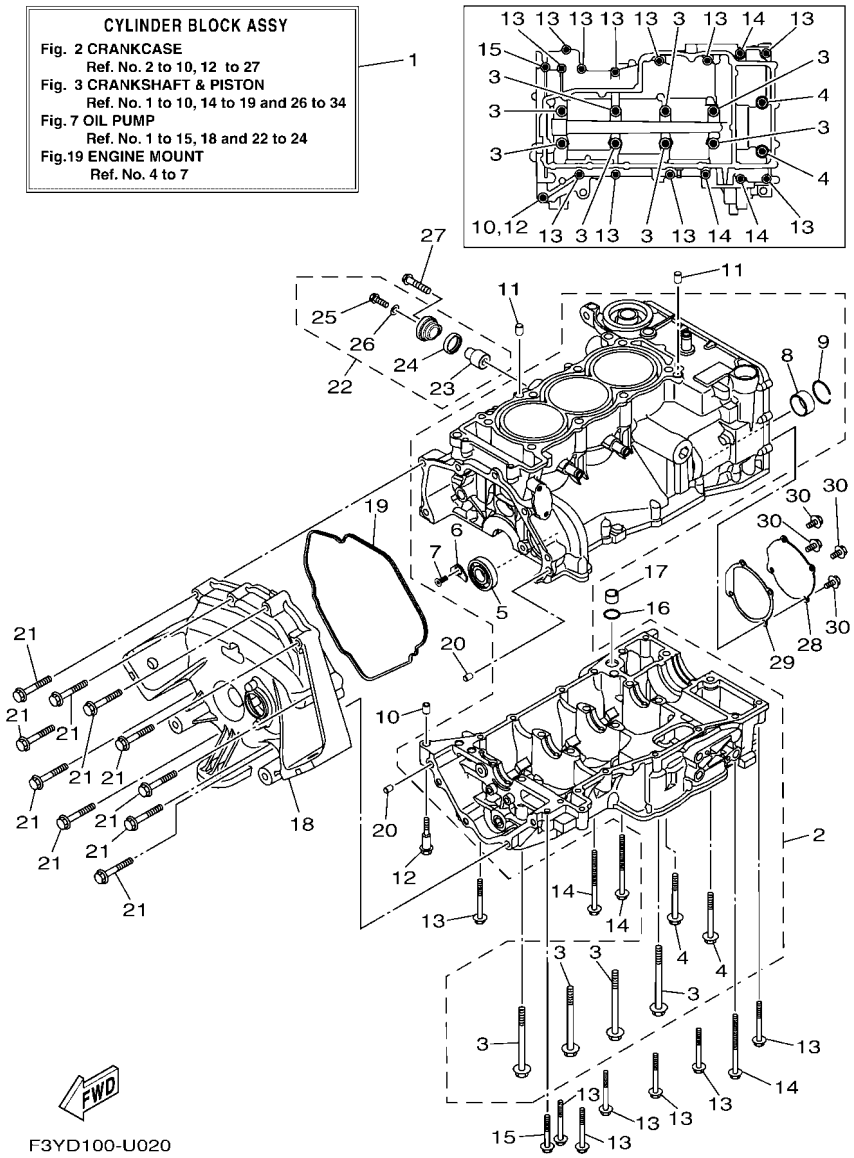

FIG. 2 CRANKCASE

REF. NO.	PART NO.	DESCRIPTION	F5S2					REMARKS
1	6GA–W009B–01	CYLINDER BLOCK ASSY	1					
2	6EY–15109–08	CRANKCASE ASSY	1					
3	90119–09004	.BOLT, WITH WASHER	8					
4	95812–08070	.BOLT, FLANGE	2					
5	93306–30323	.BEARING	1					
6	4JT–15381–01	.PLATE, BEARING COVER	1					
7	90151–06024	.SCREW, COUNTERSUNK	1					
8	8ES–11428–01	.BEARING 1	1					
9	93450–32152	.CIRCLIP	1					
10	99530–10014	PIN, DOWEL	1					
11	99530–10114	PIN, DOWEL	2					
12	90109–06308	BOLT	1					
13	95814–06055	BOLT, FLANGE	11					
14	95814–06085	BOLT, FLANGE	3					
15	95814–06045	BOLT, FLANGE	1					
16	93210–17010	O-RING	1					
17	8ES–13284–00	PIPE	1					
18	6EY–15421–00	COVER, CRANKCASE 2	1					
19	6EY–15461–00	GASKET, CRANKCASE COVER 2	1					
20	99590–08012	PIN, DOWEL	2					
21	97513–08555	BOLT, WITH WASHER	10					
22	69J–11301–11	ANODE COVER ASSY	1					
23	68V–11325–02	.ANODE	1					
24	67F–11328–01	.GROMMET, ANODE	1					
25	90105–06M07	.BOLT, FLANGE	1					
26	90430–06M03	.GASKET	1					
27	97E95–08540	BOLT, HEXAGON W/W DEEP RECESS	1					

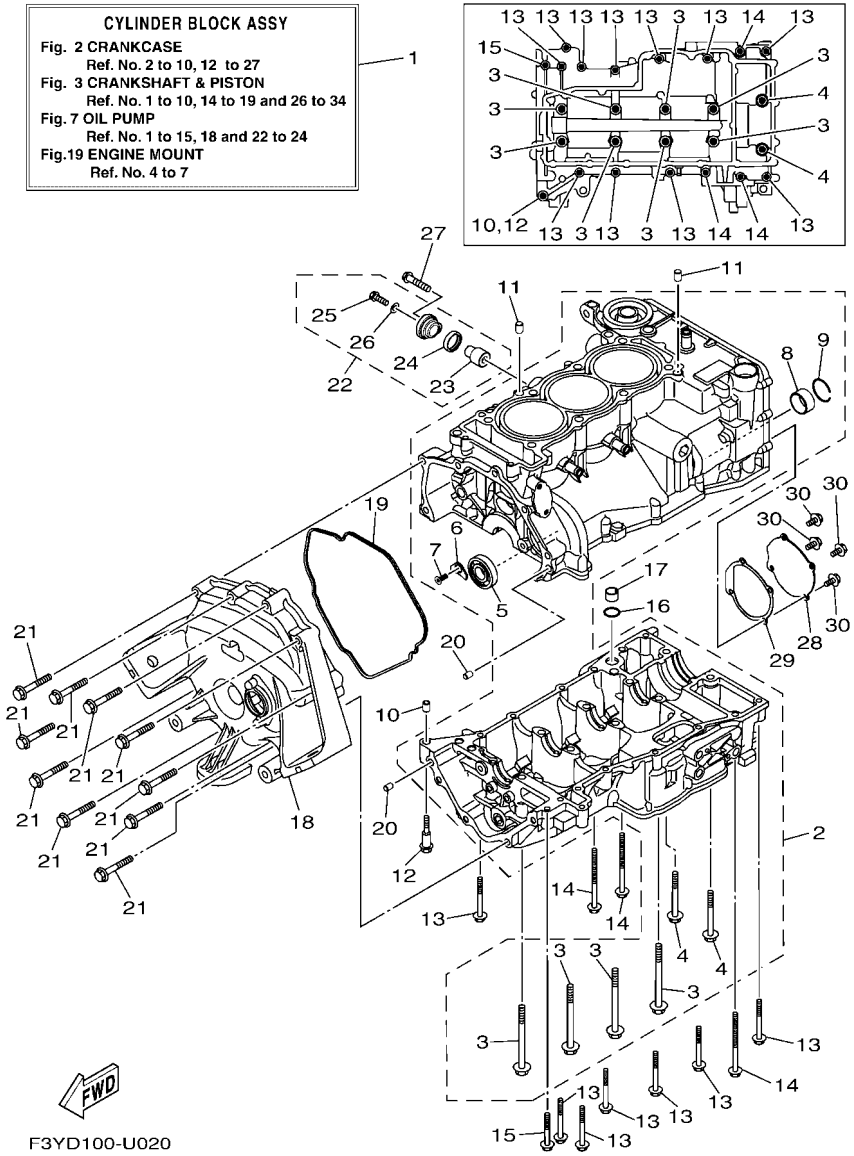

FIG. 2 CRANKCASE

REF. NO.	PART NO.	DESCRIPTION	F5S2					REMARKS
28	6EY–15589–01	PLATE	1					
29	6EY–15463–01	GASKET, 2	1					
30	95E34–06012	BOLT, FLANGE DEEP RECESS	4					

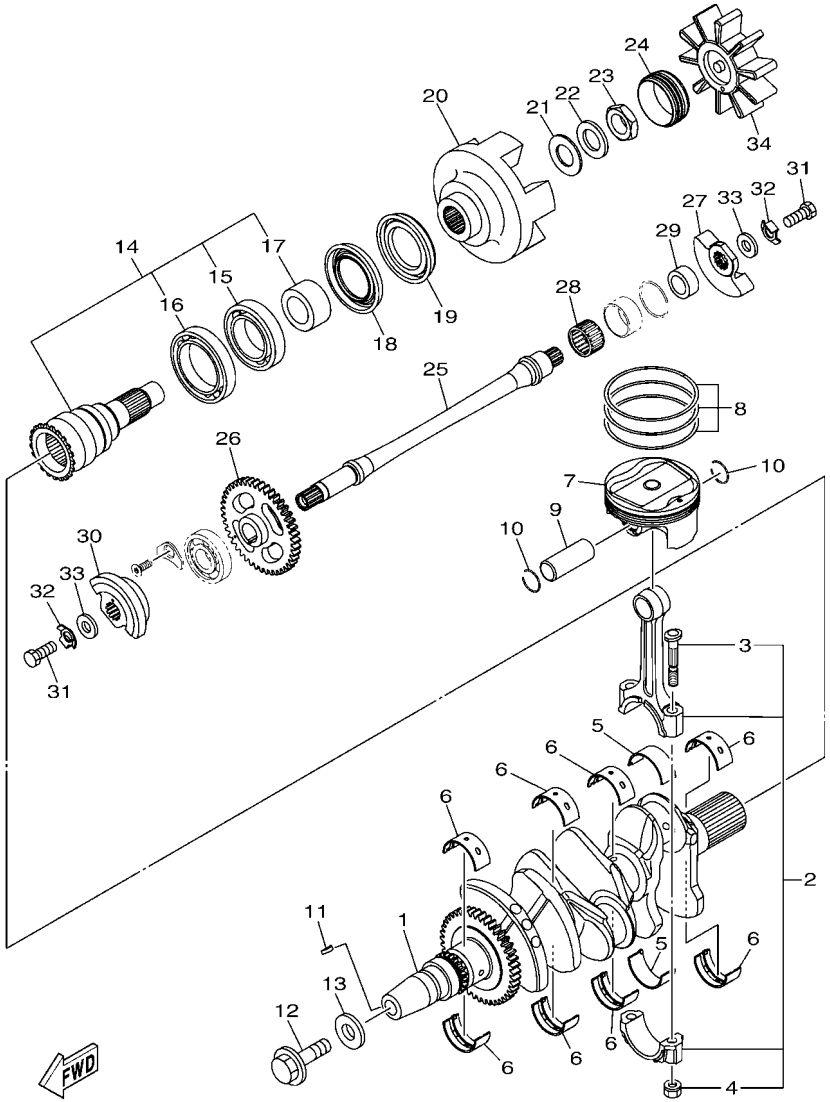

F3YU100-Y030

FIG. 3 CRANKSHAFT & PISTON

REF. NO.	PART NO.	DESCRIPTION	F5S2					REMARKS
1	6EY–11400–00	CRANKSHAFT ASSY	1					
2	B0F–11650–00	CONNECTING ROD ASSY	3					
3	5JW–11654–00	.BOLT, CONNECTING ROD	2					
4	90179–08327	.NUT	2					
5	5JW–11656–00	PLANE BEARING, CONNECTING ROD	6					UR BLUE
	5JW–11656–10	PLANE BEARING, CONNECTING ROD	6					UR BLACK
	5JW–11656–20	PLANE BEARING, CONNECTING ROD	6					UR BROWN
	5JW–11656–30	PLANE BEARING, CONNECTING ROD	6					UR GREEN
	5JW–11656–40	PLANE BEARING, CONNECTING ROD	6					UR YELLOW
	5JW–11656–50	PLANE BEARING, CONNECTING ROD	6					UR PINK
6	3LD–11416–10	PLANE BEARING, CRANKSHAFT 1	8					UR BLACK
	3LD–11416–20	PLANE BEARING, CRANKSHAFT 1	8					UR BROWN
	3LD–11416–30	PLANE BEARING, CRANKSHAFT 1	8					UR GREEN
	3LD–11416–40	PLANE BEARING, CRANKSHAFT 1	8					UR YELLOW
	3LD–11416–50	PLANE BEARING, CRANKSHAFT 1	8					UR PINK
	3LD–11416–60	PLANE BEARING, CRANKSHAFT 1	8					UR RED
	3LD–11416–70	PLANE BEARING, CRANKSHAFT 1	8					UR WHITE
7	8KH–11631–00	PISTON (STD)	3					
8	8KH–11603–02	PISTON RING SET (STD)	3					
9	6EY–11633–00	PIN, PISTON	3					
10	93450–19095	CIRCLIP	6					
11	90280–03045	KEY, WOODRUFF	1					
12	90105–12101	BOLT, FLANGE	1					
13	90201–121H0	WASHER, PLATE	1					
14	6EY–11406–10	SHAFT ASSY	1					
15	93306–00702	.BEARING	1					
16	93306–90901	.BEARING	1					

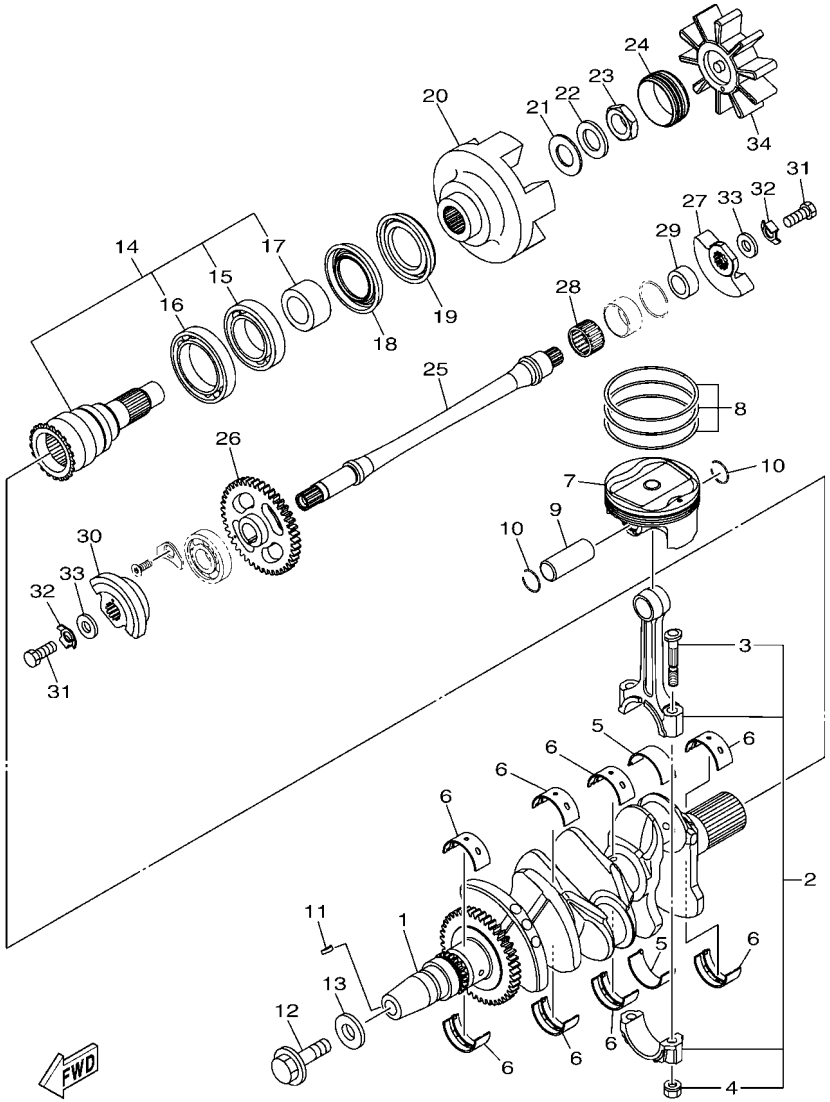

F3YU100-Y030

FIG. 3 CRANKSHAFT & PISTON

REF. NO.	PART NO.	DESCRIPTION	F5S2					REMARKS
17	6EY–11917–10	.COLLAR	1					
18	93101–40001	OIL SEAL	1					
19	93101–40002	OIL SEAL	1					
20	6JF–11571–00	FLYWHEEL	1					
21	90201–20030	WASHER, PLATE	1					
22	90208–20001	WASHER, CONICAL SPRING	1					
23	90179–20019	NUT	1					
24	6EY–45155–00	CAP	1					
25	2HC–11407–00	SHAFT ASSY., 2	1					
26	6EY–11531–00	GEAR, BALANCE WEIGHT	1					
27	8ES–11454–00	WEIGHT 1	1					
28	93310–42239	BEARING	1					
29	6EY–11478–00	COLLAR	1					
30	2HC–11464–00	WEIGHT 2	1					
31	97012–10025	BOLT	2					
32	90215–10003	WASHER, LOCK	2					
33	90201–10591	WASHER, PLATE	2					
34	6EY–4581J–00	RUBBER SHAFT COUPLING	1					

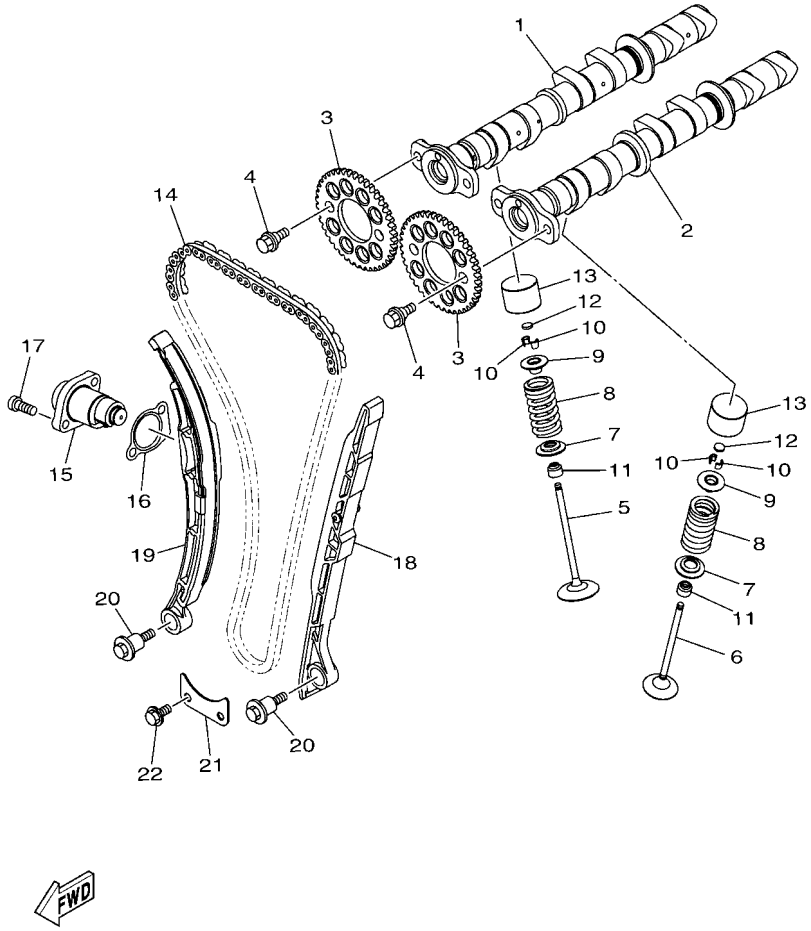

F4G1100-R040

FIG. 4 VALVE

REF. NO.	PART NO.	DESCRIPTION	F5S2					REMARKS
1	6EY–12170–00	CAMSHAFT ASSY 1	1					
2	6EY–12180–00	CAMSHAFT ASSY 2	1					
3	2HC–12176–00	SPROCKET, CAM CHAIN	2					
4	90105–07004	BOLT, FLANGE	4					
5	8GL–12111–10	VALVE, INTAKE	6					
6	8GL–12121–10	VALVE, EXHAUST	6					
7	1RC–12116–00	SEAT, VALVE SPRING	12					
8	8GL–12113–00	SPRING, VALVE INNER	12					
9	3D7–12117–00	RETAINER, VALVE SPRING	12					
10	1WG–12118–00	LOCK, VALVE SPRING RETAINER	24					
11	2HC–12119–00	SEAL, VALVE STEM	12					
12	1HX–12168–00	PAD, ADJUSTING 2 (1.20)	12					UR
	1HX–12168–20	PAD, ADJUSTING 2 (1.25)	12					UR
	1HX–12168–40	PAD, ADJUSTING 2 (1.30)	12					UR
	1HX–12168–60	PAD, ADJUSTING 2 (1.35)	12					UR
	1HX–12168–80	PAD, ADJUSTING 2 (1.40)	12					UR
	1HX–12168–A0	PAD, ADJUSTING 2 (1.45)	12					UR
	1HX–12168–F0	PAD, ADJUSTING 2 (1.50)	12					UR
	1HX–12168–H1	PAD, ADJUSTING 2 (1.55)	12					UR
	1HX–12168–K1	PAD, ADJUSTING 2 (1.60)	12					UR
	1HX–12168–M1	PAD, ADJUSTING 2 (1.65)	12					UR
	1HX–12168–R1	PAD, ADJUSTING 2 (1.70)	12					UR
	1HX–12168–U1	PAD, ADJUSTING 2 (1.75)	12					UR
	1HX–12168–W1	PAD, ADJUSTING 2 (1.80)	12					UR
	1HX–12168–Y1	PAD, ADJUSTING 2 (1.85)	12					UR
	1HX–12169–11	PAD, ADJUSTING 2 (1.90)	12					UR
	1HX–12169–31	PAD, ADJUSTING 2 (1.95)	12					UR

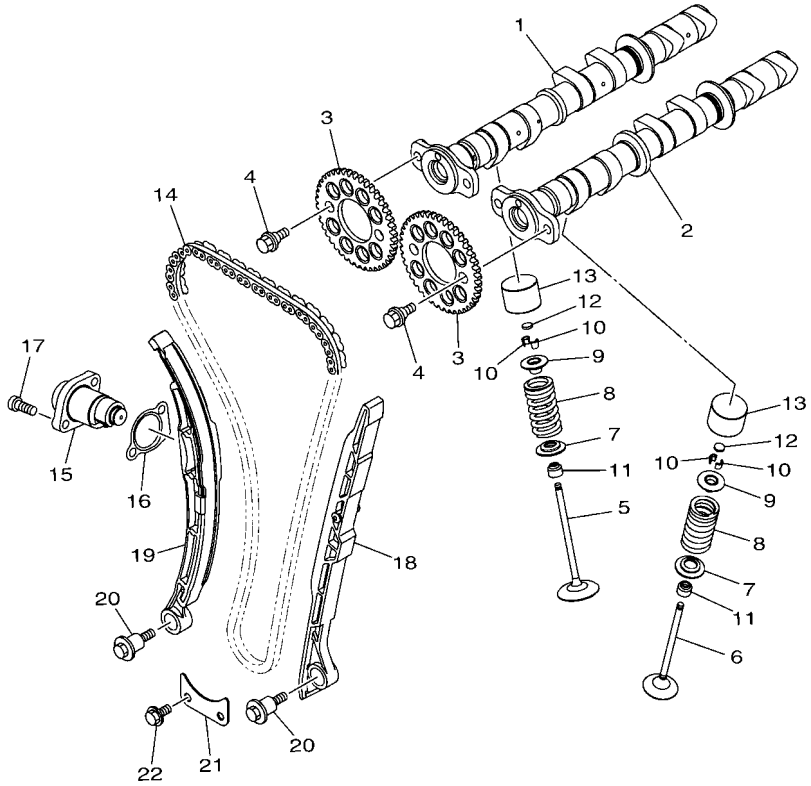

F4G1100-R040

FIG. 4 VALVE

REF. NO.	PART NO.	DESCRIPTION	F5S2					REMARKS
12	1HX–12169–50	PAD, ADJUSTING 2 (2.00)	12					UR
	1HX–12169–70	PAD, ADJUSTING 2 (2.05)	12					UR
	1HX–12169–90	PAD, ADJUSTING 2 (2.10)	12					UR
	1HX–12169–E0	PAD, ADJUSTING 2 (2.15)	12					UR
	1HX–12169–G0	PAD, ADJUSTING 2 (2.20)	12					UR
	1HX–12169–J0	PAD, ADJUSTING 2 (2.25)	12					UR
	1HX–12169–L0	PAD, ADJUSTING 2 (2.30)	12					UR
	1HX–12169–N0	PAD, ADJUSTING 2 (2.35)	12					UR
	1HX–12169–T0	PAD, ADJUSTING 2 (2.40)	12					UR
13	6EY–12153–01	LIFTER, VALVE	12					
14	94591–57140	CHAIN (98RH2010-140M)	1					
15	8KH–12210–00	TENSIONER ASSY, CAM CHAIN	1					
16	2C0–12213–00	GASKET, TENSIONER CASE	1					
17	90110–06274	BOLT, HEXAGON SOCKET HEAD	2					
18	6EY–12251–00	DAMPER, CHAIN 1	1					
19	2HC–12252–00	DAMPER, CHAIN 2	1					
20	90109–06295	BOLT	2					
21	6EY–12279–00	PLATE	1					
22	95812–06012	BOLT, FLANGE	2					

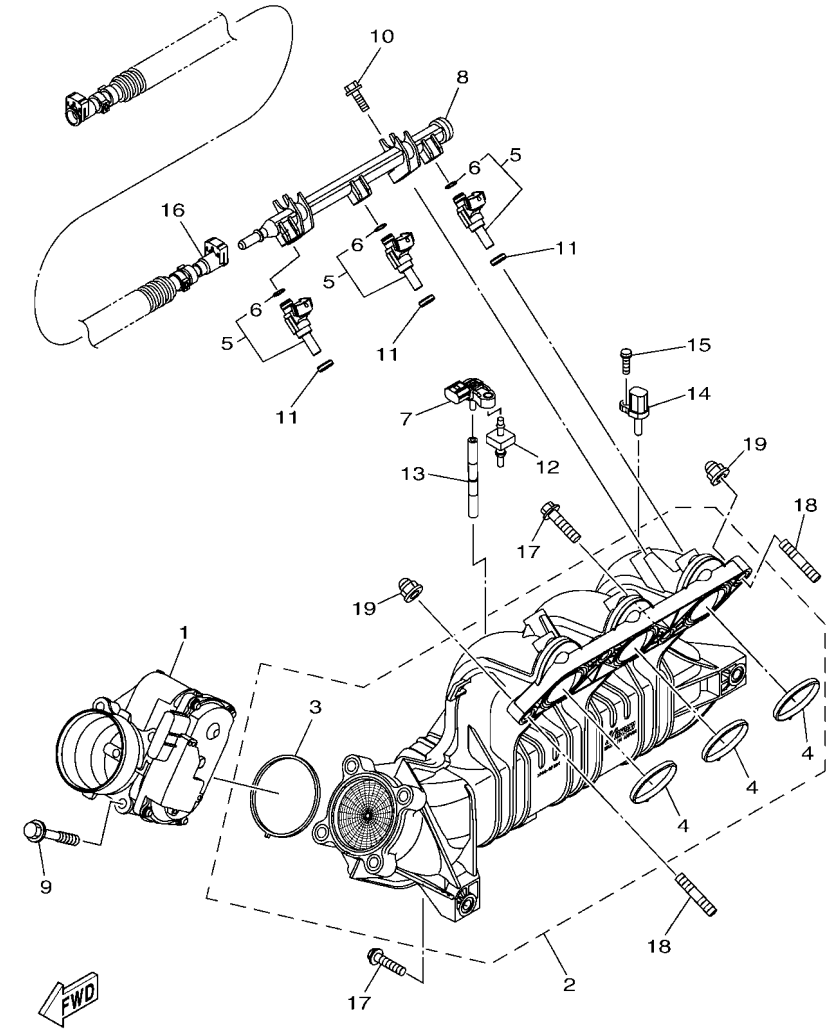

F3Y7100-T050

FIG. 5 INTAKE

REF. NO.	PART NO.	DESCRIPTION	F5S2					REMARKS
1	6EY–13750–01	THROTTLE BODY ASSY	1					
2	6EY–13641–03	MANIFOLD, INTAKE 1	1					
3	6EY–14156–00	.GASKET, INSULATING	1					
4	6EY–14126–00	.GASKET	3					
5	2HC–13761–00	INJECTOR	3					
6	68V–1416A–00	.O-RING	1					
7	5S7–82380–00	SENSOR, PRESSURE	1					
8	6EY–12880–01	DELIVERY PIPE	1					
9	90105–08243	BOLT, FLANGE	4					
10	95814–06020	BOLT, FLANGE	2					
11	8FP–13556–10	GASKET, MANIFOLD	3					
12	6BH–14445–00	GROMMET	1					
13	6EY–13532–00	HOSE, VACUUM SENSING 3	1					
14	8FP–85886–00	SENSOR, AIR TEMPERATURE	1					
15	97702–50520	SCREW, TAPPING	1					
16	6GY–2450B–00	FUEL HOSE ASSY	1					
17	97513–08535	BOLT, WITH WASHER	4					
18	95612–08625	BOLT, STUD	2					
19	90176–08080	NUT, CAP	2					

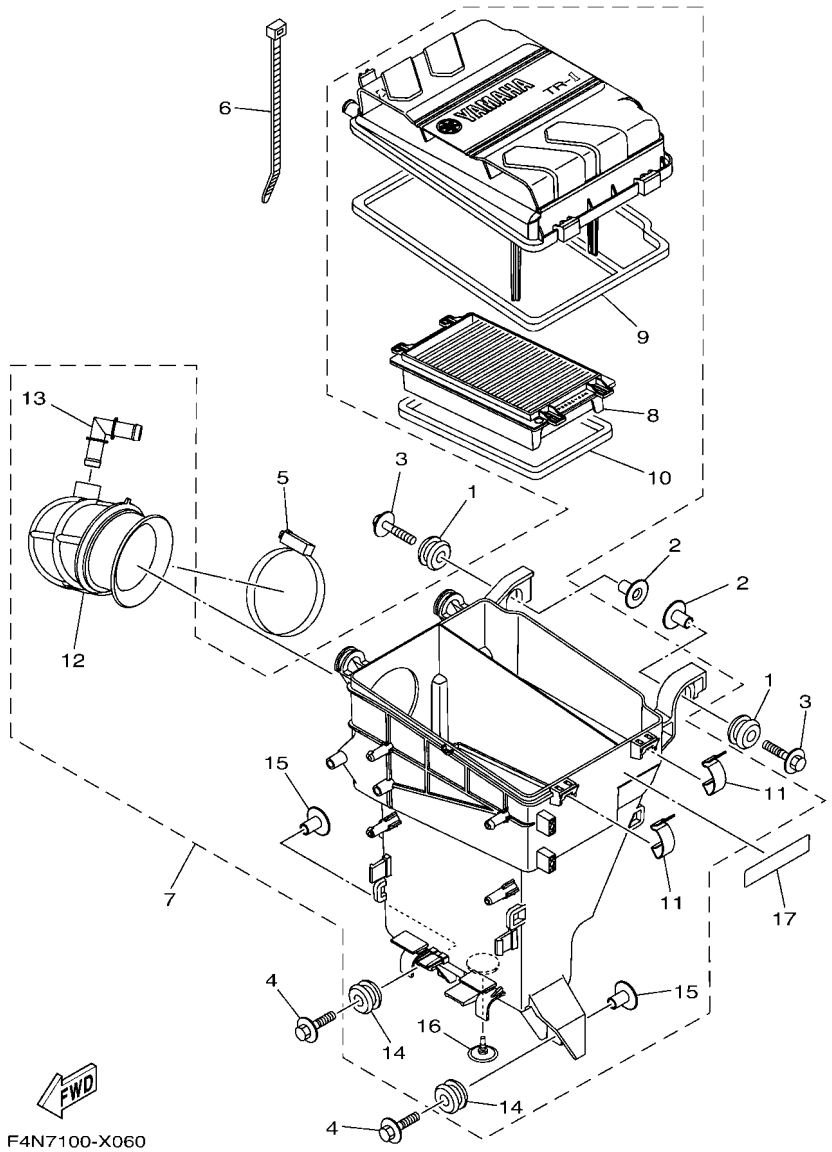

FIG. 6 INTAKE 2

REF. NO.	PART NO.	DESCRIPTION	F5S2					REMARKS
1	90480–22M15	GROMMET	2					
2	90387–08M37	COLLAR	2					
3	90119–08169	BOLT, WITH WASHER	2					
4	90119–08187	BOLT, WITH WASHER	2					
5	90450–90002	HOSE CLAMP ASSY	1					
6	90465–13M18	CLAMP	1					
7	6EY–14410–10	AIR CLEANER ASSY.	1					
8	6EY–14451–00	.ELEMENT, AIR CLEANER	1					
9	6EY–14462–00	.SEAL	1					
10	6EY–14452–00	.SEAL	1					
11	6EY–14436–00	.HOOK	2					
12	6EY–14419–00	.PIPE	1					
13	6EY–14485–00	.PIPE, JOINT	1					
14	90480–22M15	.GROMMET	2					
15	90387–08M37	.COLLAR	2					
16	6EY–14470–01	.VALVE	1					
17	60E–83627–00	LABEL, CAUTION 7	1					

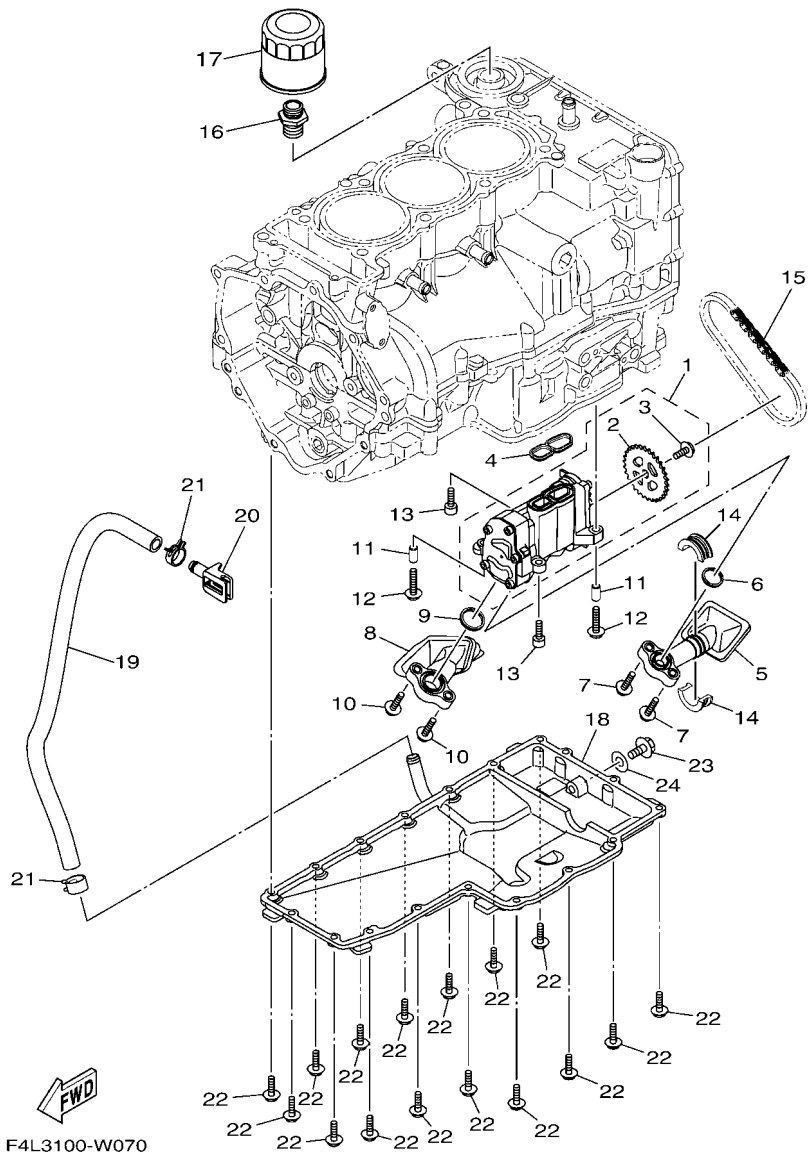

FIG. 7 OIL PUMP

REF. NO.	PART NO.	DESCRIPTION	F5S2					REMARKS
1	6EY–13300–00	OIL PUMP ASSY	1					
2	6EY–13355–00	.SPROCKET, DRIVEN	1					
3	90149–06190	.SCREW	1					
4	6EY–13563–00	GASKET	1					
5	6EY–13405–00	OIL PIPE COMP. 1	1					
6	6EY–13477–00	GASKET	1					
7	90110–06172	BOLT, HEXAGON SOCKET HEAD	2					
8	6EY–13406–00	OIL PIPE COMP. 2	1					
9	6EY–13476–00	GASKET	1					
10	90110–06172	BOLT, HEXAGON SOCKET HEAD	2					
11	99530–08016	PIN, DOWEL	2					
12	90110–06287	BOLT, HEXAGON SOCKET HEAD	2					
13	90110–06335	BOLT, HEXAGON SOCKET HEAD	2					
14	6EY–15486–00	GROMMET	2					
15	94580–25060	CHAIN (DID25 60LE)	1					
16	90401–20008	BOLT, UNION	1					
17	5GH–13440–90	ELEMENT ASSY, OIL CLEANER	1					
18	6EY–13417–11	COVER, STRAINER	1					
19	90445–18M06	HOSE (L500)	1					
20	6EY–13455–00	PLUG	1					
21	90467–170A5	CLIP	2					
22	95E34–06020	BOLT, FLANGE DEEP RECESS	18					
23	95814–08020	BOLT, FLANGE	1					
24	90430–08209	GASKET	1					

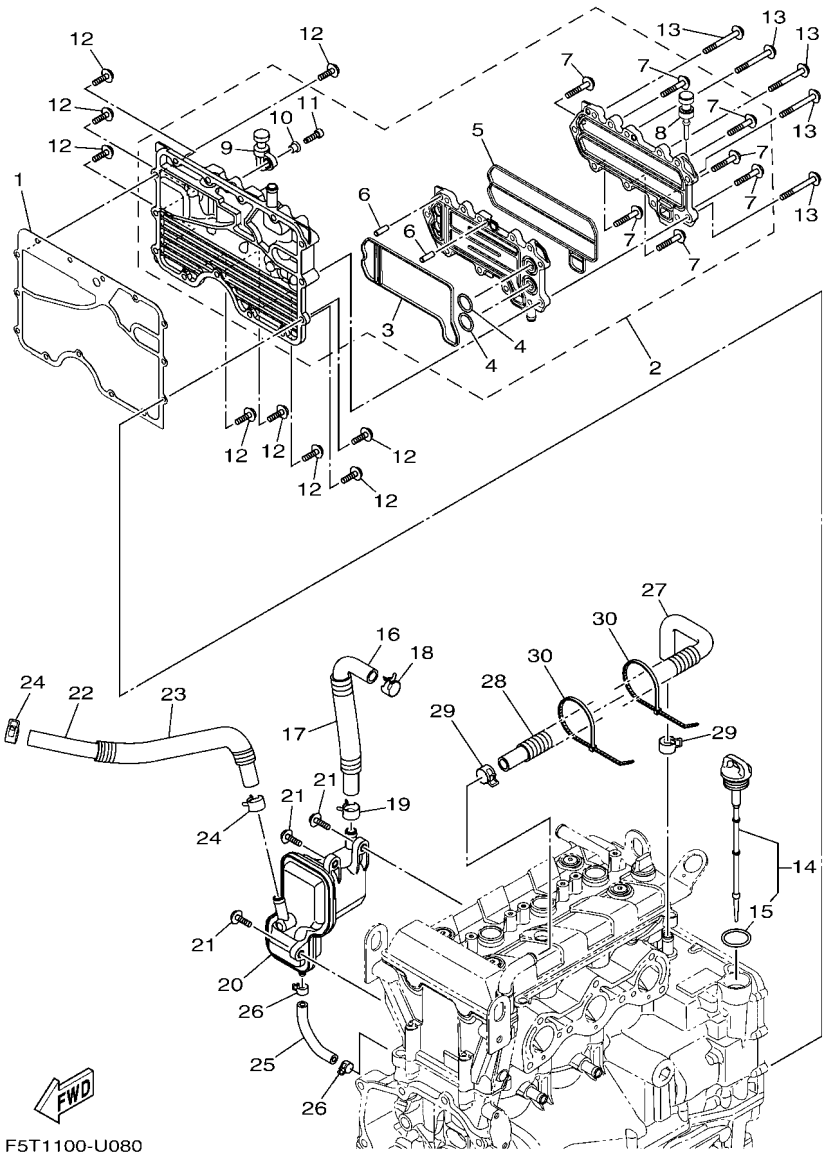

FIG. 8 OIL COOLER

REF. NO.	PART NO.	DESCRIPTION	F5S2					REMARKS
1	6EY–15453–01	GASKET	1					
2	6EY–13470–03	OIL COOLER ASSY	1					
3	6EY–13556–10	.GASKET, MANIFOLD	1					
4	93210–19522	.O-RING	2					
5	6EY–13557–10	.GASKET	1					
6	93606–19M23	.PIN, DOWEL	2					
7	95814–06035	.BOLT, FLANGE	7					
8	90480–06M46	.GROMMET	1					
9	6S5–81364–11	.GROMMET	1					
10	90387–06M05	.COLLAR	1					
11	91380–06020	.BOLT	1					
12	95814–06020	BOLT, FLANGE	9					
13	95814–06055	BOLT, FLANGE	5					
14	6EY–15362–10	PLUG, OIL LEVEL	1					
15	93210–24M79	.O-RING	1					
16	6EY–11166–10	PIPE, BREATHER 1	1					
17	90447–19004	HOSE, WITH SPRING (L130)	1					
18	90467–200A3	CLIP	1					
19	90467–170A4	CLIP	1					
20	6EY–11164–00	SEPERATOR, OIL	1					
21	90105–06M15	BOLT, FLANGE	3					
22	90445–18020	HOSE (L420)	1					
23	90446–24MF4	HOSE (L350)	1					
24	90467–170A4	CLIP	2					
25	6EY–11125–00	PIPE, BREATHER 4	1					
26	90467–110A1	CLIP	2					
27	6EY–11126–10	PIPE, BREATHER 3	1					

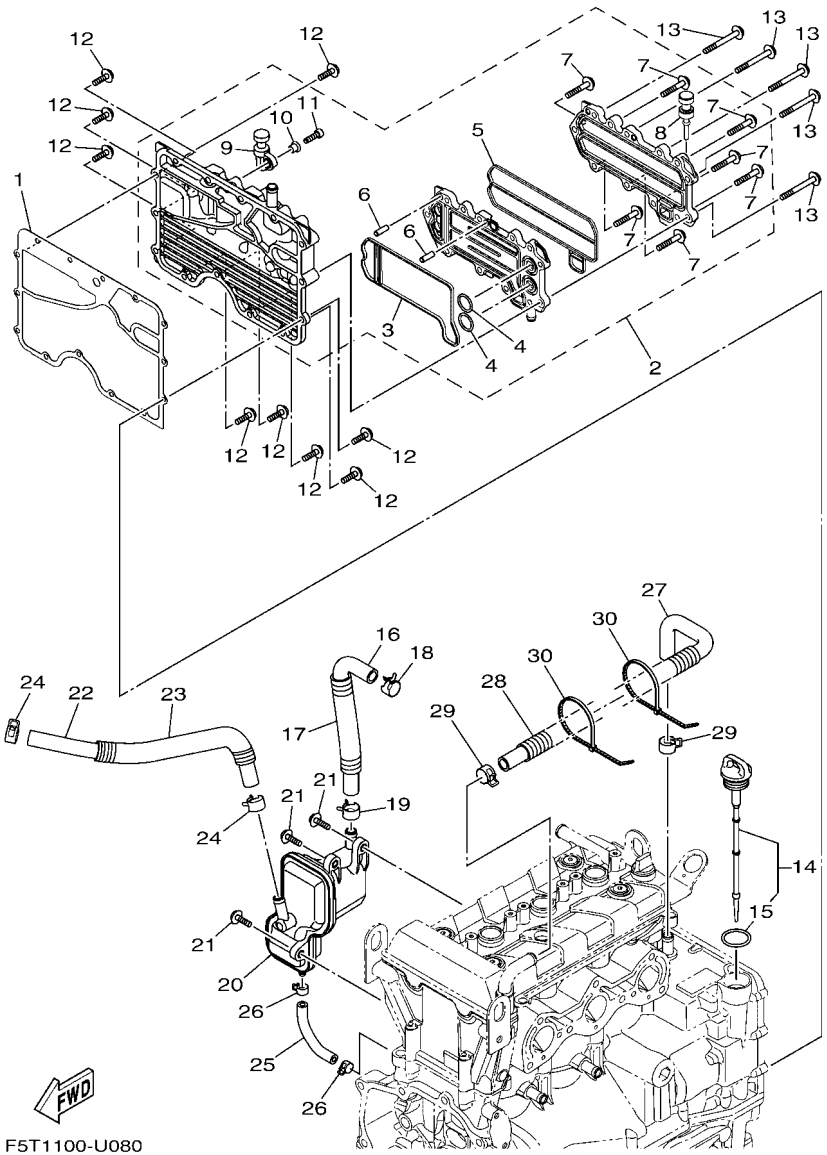

FIG. 8 OIL COOLER

REF. NO.	PART NO.	DESCRIPTION	F5S2					REMARKS
28	90447–19014	TUBE (L300)	1					
29	90467–170A4	CLIP	2					
30	90464–35132	CLAMP	2					

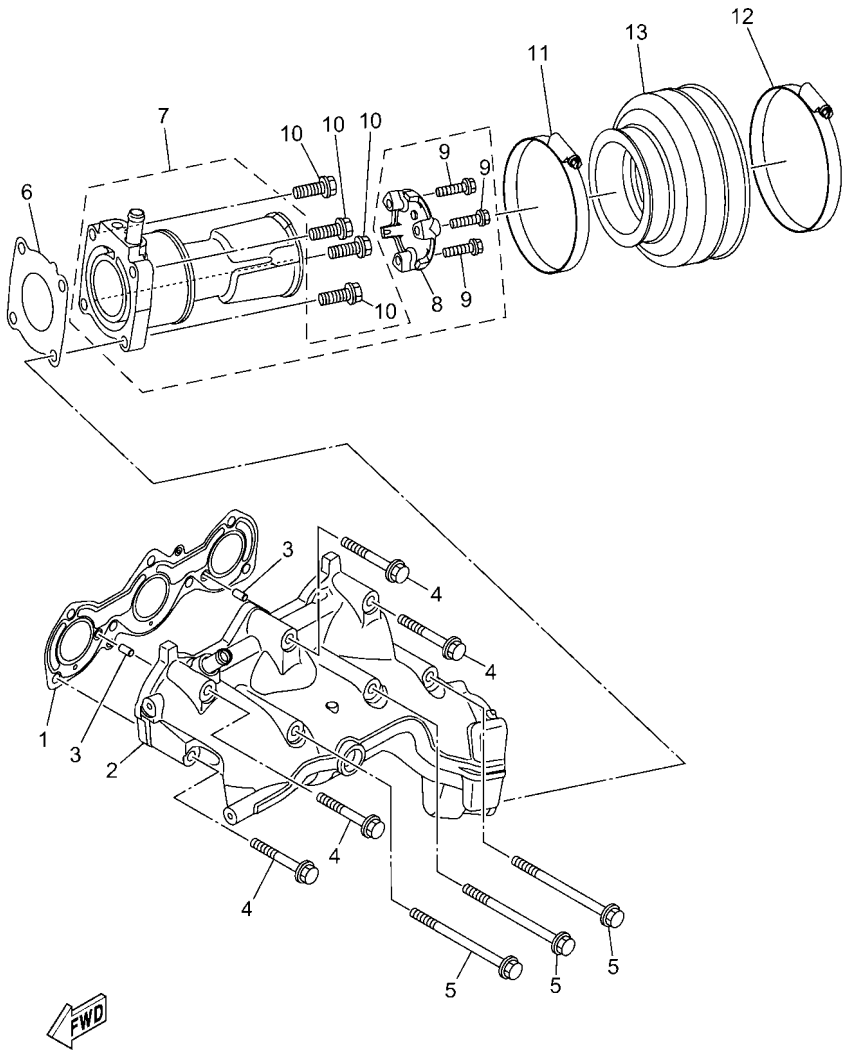

F5P1100-0090

FIG. 9 EXHAUST 1

REF. NO.	PART NO.	DESCRIPTION	F5S2					REMARKS
1	6GA–14613–00	GASKET, EXHAUST PIPE	1					
2	6GA–14711–00	MUFFLER 1	1					
3	93606–12019	PIN, DOWEL	2					
4	90119–08034	BOLT, WITH WASHER	4					
5	90119–08097	BOLT, WITH WASHER	3					
6	6GA–14739–00	GASKET, MUFFLER DAMPER 1	1					
7	6JF–14784–00	PIPE, TAIL	1					
8	6JF–1469W–00	.PLATE, SILENCER 6	1					
9	95E34–06030	.BOLT, FLANGE DEEP RECESS	3					
10	95024–08030	BOLT,FLG,(SMALL HEAD)	4					
11	90450–99808	HOSE CLAMP ASSY	1					
12	90450–99810	HOSE CLAMP ASSY	1					
13	6GA–14752–00	PIPE, OUTLET	1					

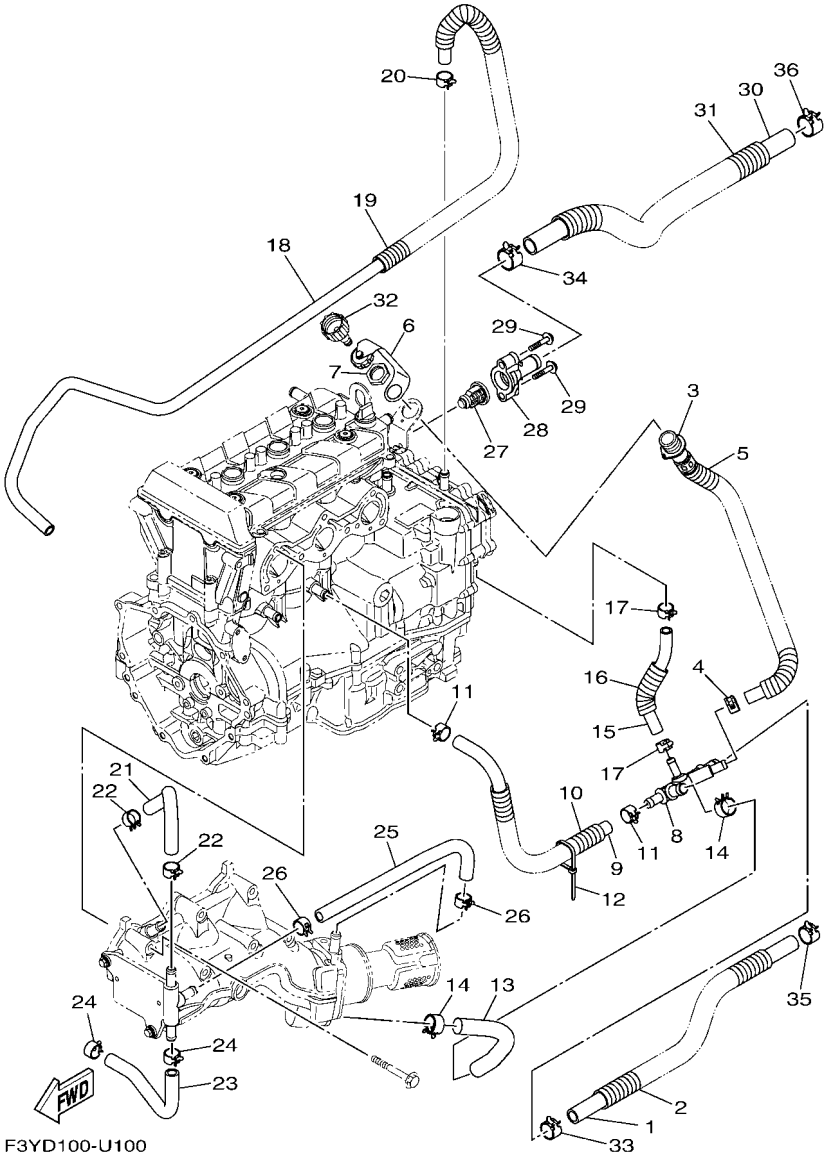

F3YD100-U100

FIG. 10 EXHAUST 2

REF. NO.	PART NO.	DESCRIPTION	F5S2					REMARKS
1	F5P–E243E–00	HOSE 2	1					
2	F3Y–U773D–11	TUBE	1					
3	6EY–12580–00	JOINT ASSY	1					
4	90467–150A5	CLIP	1					
5	90446–24M89	HOSE (L420)	1					
6	6EY–84385–00	CAP,1	1					
7	EU0–61652–00	NUT	1					
8	6EY–12584–00	JOINT, HOSE 3	1					
9	90445–18012	HOSE (L400)	1					
10	90447–19014	TUBE (L300)	1					
11	90467–160A0	CLIP	2					
12	90464–35132	CLAMP	1					
13	90445–21015	HOSE (L170)	1					
14	90467–200A4	CLIP	2					
15	90445–16019	HOSE (L160)	1					
16	90446–24M44	HOSE (L70)	1					
17	90467–141A3	CLIP	2					
18	90445–16020	HOSE (L1600)	1					
19	6EY–24864–00	TUBE	1					
20	90467–160A0	CLIP	1					
21	6EY–12577–00	HOSE 2	1					
22	90467–160A0	CLIP	2					
23	6S5–12579–00	HOSE 4	1					
24	90467–160A0	CLIP	2					
25	90445–18018	HOSE (L370)	1					
26	90467–160A0	CLIP	2					
27	6D3–12411–00	THERMOSTAT	1					

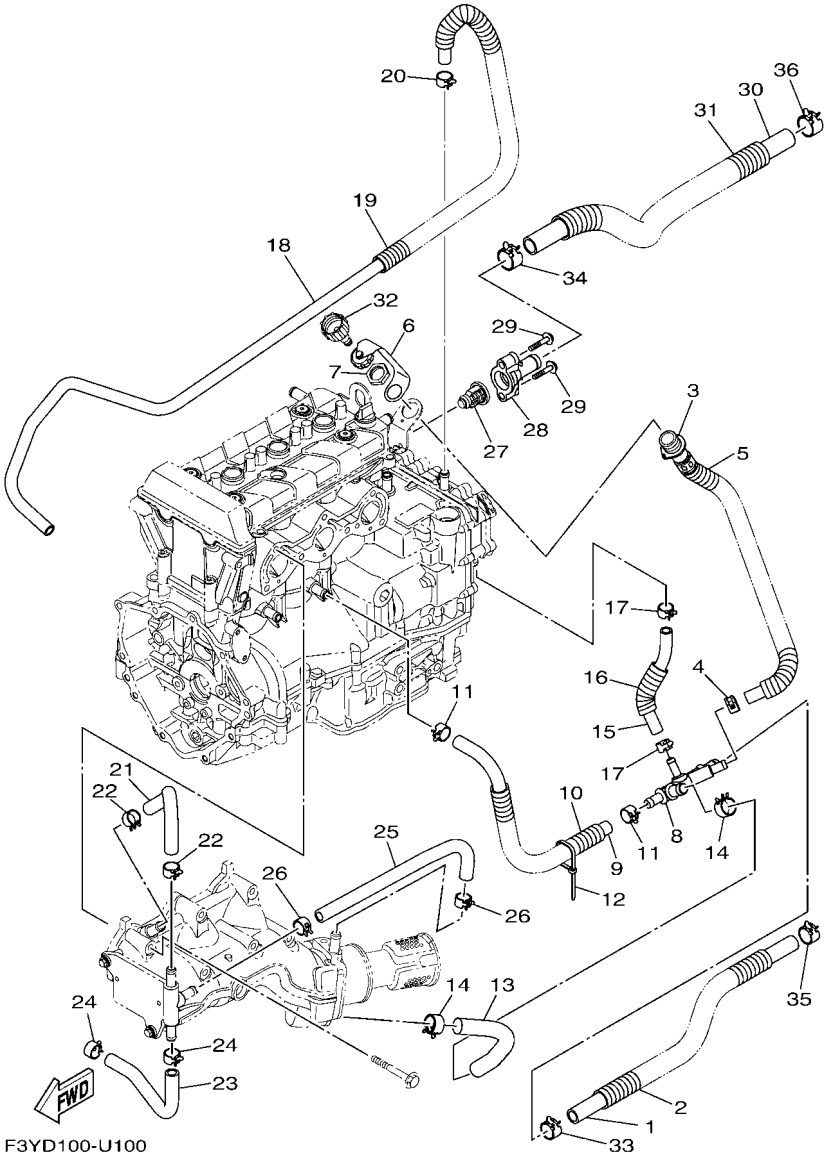

FIG. 10 EXHAUST 2

REF. NO.	PART NO.	DESCRIPTION	F5S2					REMARKS
28	6EY–12413–00	COVER, THERMOSTAT	1					
29	90105–06035	BOLT, FLANGE	2					
30	F5P–E243A–00	HOSE 1	1					
31	F3Y–U773D–20	TUBE	1					
32	67X–E2590–00	CONDUCTION ASSY	1					FOR CAN
	67X–E2590–10	CONDUCTION ASSY	1					FOR EUR
33	90467–200A3	CLIP	1					
34	90467–240A0	CLIP	1					
35	90467–200A3	CLIP	1					
36	90467–240A3	CLIP	1					

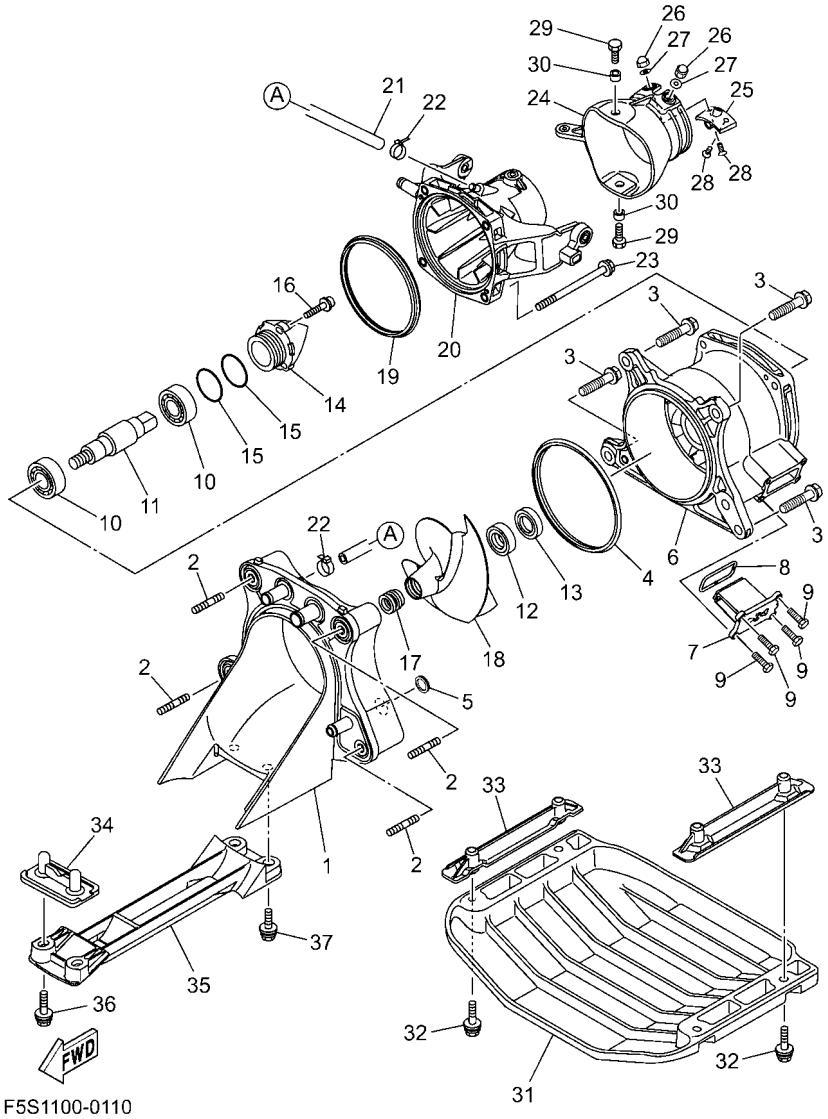

F5S1100-0110

FIG. 11 JET UNIT 1

REF. NO.	PART NO.	DESCRIPTION	F5S2					REMARKS
1	6MP–G5833–00	PLATE, TRANSOM 2	1					
2	90116–10803	BOLT, STUD	4					
3	90119–10810	BOLT, WITH WASHER	4					
4	6MP–G6883–00	PACKING	1					
5	6MP–G5874–00	RING, SEAL	1					
6	6MP–R1312–00	HOUSING, IMPELLER	1					
7	6MP–G6882–00	FILTER	1					
8	6MP–G2414–00	O-RING	1					
9	90119–06889	BOLT, WITH WASHER	4					
10	93306–255X7	BEARING	2					
11	6GA–G5514–00	SHAFT, DRIVE 4	1					
12	93102–25M34	OIL SEAL	1					
13	93101–25M50	OIL SEAL	1					
14	6EX–R1326–10	CAP	1					
15	93210–44003	O-RING	2					
16	90110–06822	BOLT, HEXAGON SOCKET HEAD	3					
17	6DU–51319–00	CAP, IMPELLER	1					
18	6GA–R1321–00	IMPELLER	1					
19	93211–49800	O-RING	1					
20	6MP–R1318–00	NOZZLE	1					
21	90445–14M24	HOSE (L260)	1					
22	90465–11829	CLAMP	2					
23	90119–10810	BOLT, WITH WASHER	4					
24	6MP–R1313–00	NOZZLE, DEFLECTOR	1					
25	6MP–U269B–00	SPOUT	1					
26	95380–06800	NUT	2					
27	90201–06801	WASHER, PLATE	2					

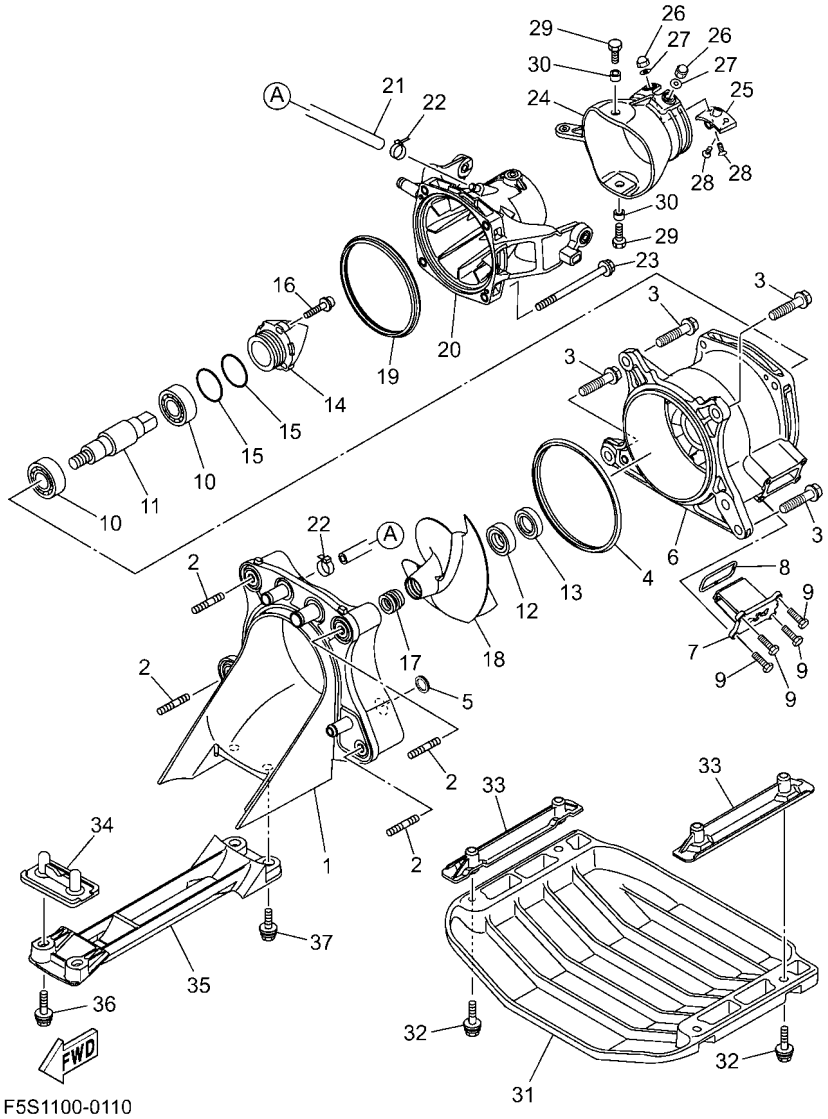

F5S1100-0110

FIG. 11 JET UNIT 1

REF. NO.	PART NO.	DESCRIPTION	F5S2					REMARKS
28	98780–06016	SCREW, FLAT HEAD	2					
29	90119–08840	BOLT, WITH WASHER	2					
30	90387–08M30	COLLAR	2					
31	F5P–U273B–00	PLATE 2	1					
32	F4P–U3222–00	BOLT	4					
33	F5P–U8572–00	BRACKET 2	2					
34	F2S–U8577–00	BRACKET, 3	1					
35	F5P–U72B7–00	SCREEN, INTAKE	1					
36	F3Y–U1426–01	BOLT	2					
37	F3Y–U1426–01	BOLT	2					

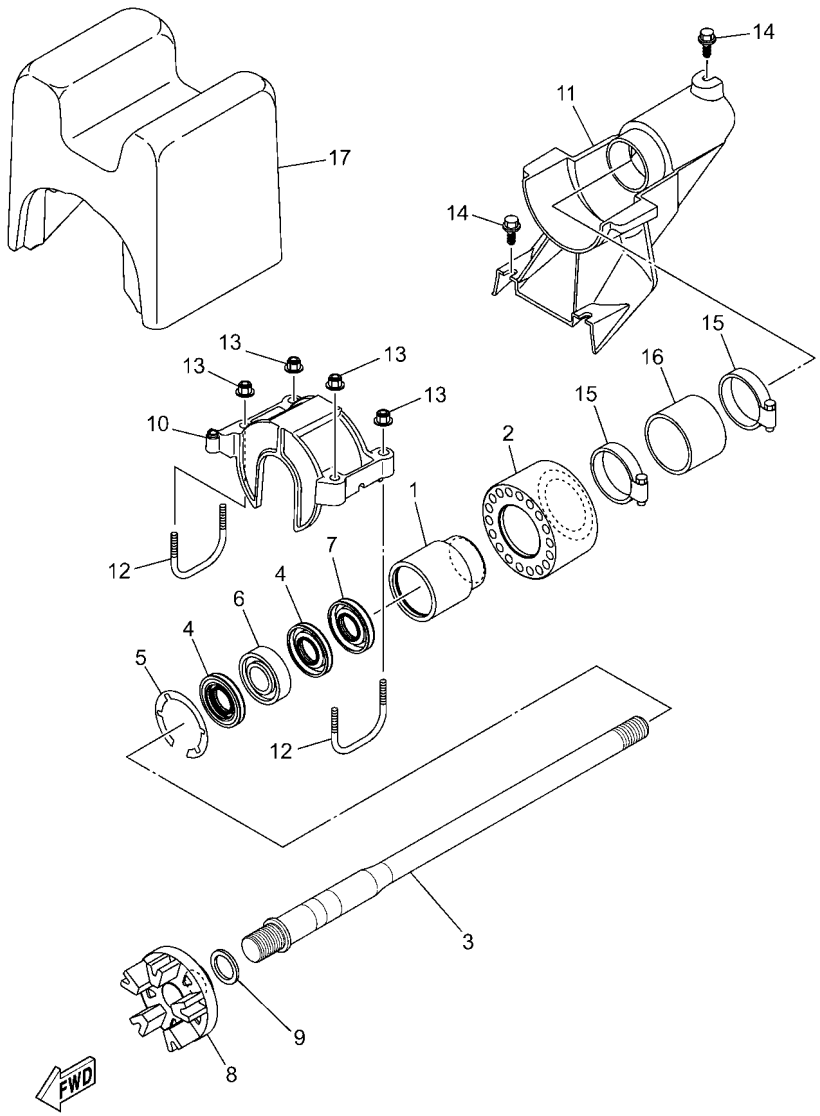

F5P1100-0120

FIG. 12 JET UNIT 2

REF. NO.	PART NO.	DESCRIPTION	F5S2					REMARKS
1	6GA–G5332–00	HOUSING, BEARING	1					
2	6GA–G5235–00	DAMPER	1					
3	6MP–G5511–00	SHAFT, DRIVE	1					
4	93101–25M55	OIL SEAL	2					
5	99009–52500	CIRCLIP	1					
6	93306–205XG	BEARING	1					
7	93101–24001	OIL SEAL	1					
8	6GA–G5593–00	FLANGE, COUPLING 1	1					
9	90201–24800	WASHER, PLATE	1					
10	F3Y–U2155–01	CAP	1					
11	F5P–U883E–00	JOINT, PIPE	1					
12	F3Y–U3746–01	NUT,INSERT	2					
13	F2N–U142L–00	NUT, LOCK	4					
14	90109–06832	BOLT	3					
15	90601–155U4	BAND, HOSE 55	2					
16	F3Y–U883B–00	PIPE 1	1					
17	F3Y–U892D–01	FLOTATION, STERN RH	1					

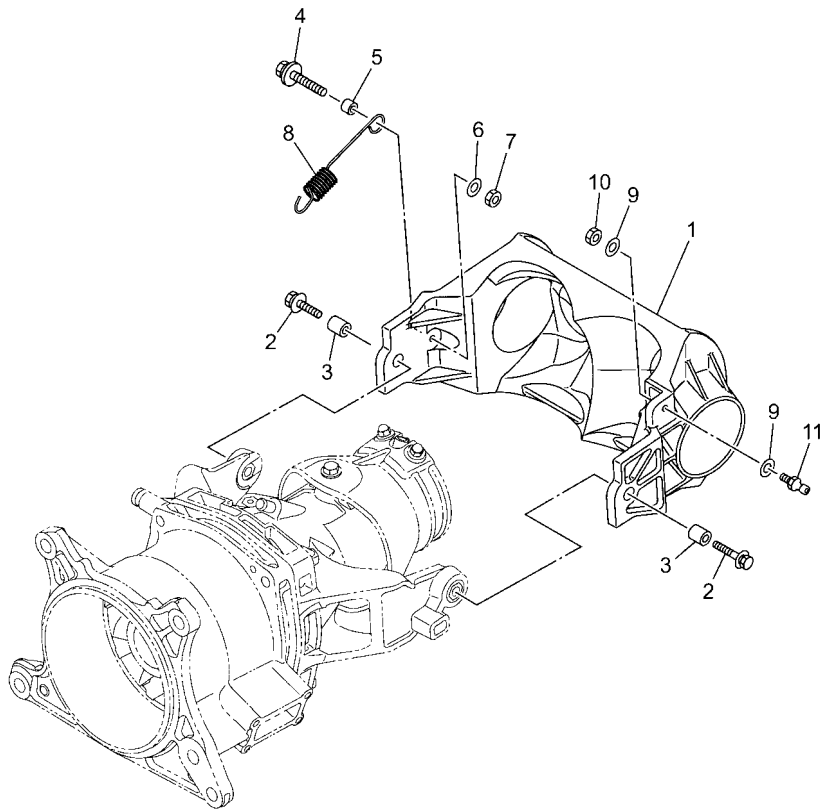

F5S1100-0130

FIG. 13 JET UNIT 3

REF. NO.	PART NO.	DESCRIPTION	F5S2					REMARKS
1	6GY–R1314–00	GATE, REVERSE	1					
2	90119–08840	BOLT, WITH WASHER	2					
3	90387–08M30	COLLAR	2					
4	90119–068E3	BOLT, WITH WASHER	1					
5	90387–06319	COLLAR	1					
6	90201–06801	WASHER, PLATE	1					
7	95380–06600	NUT, HEXAGON	1					
8	6MP–R2358–00	SPRING, RETAINER	1					
9	90201–06801	WASHER, PLATE	2					
10	95380–06600	NUT, HEXAGON	1					
11	6GA–U1461–10	STUD, JOINT BALL	1					

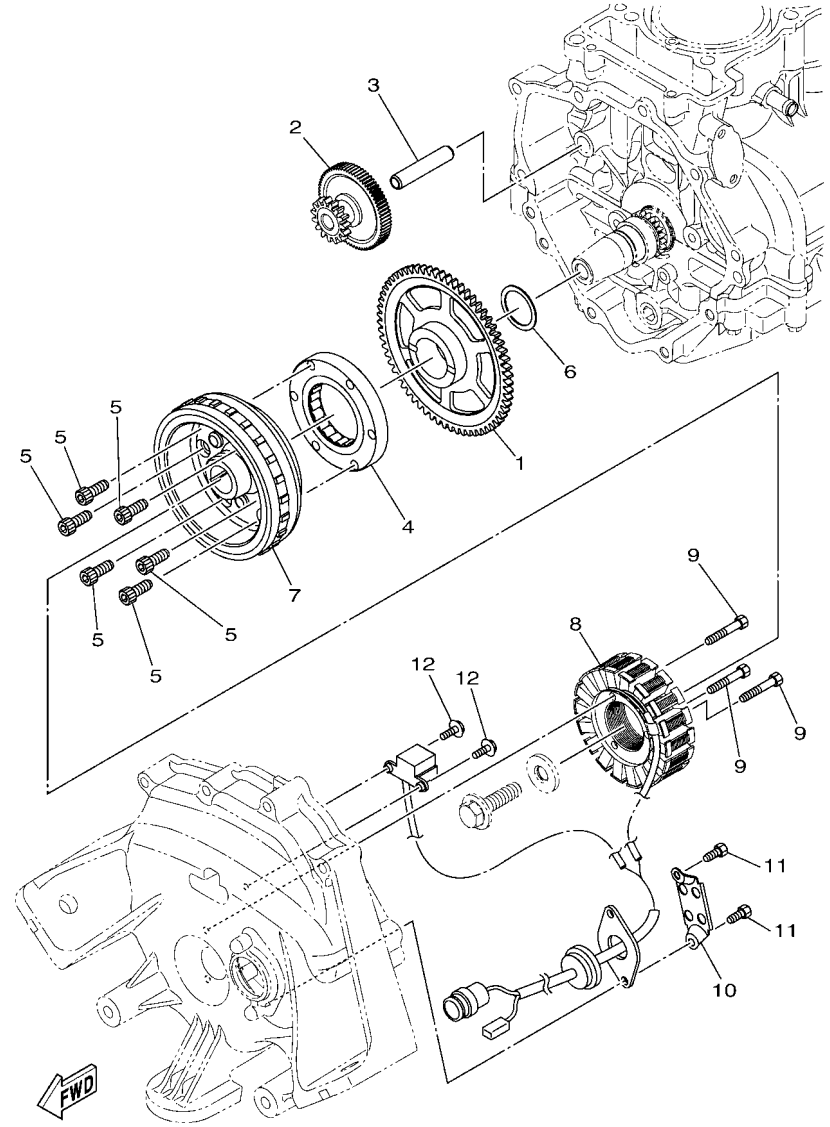

F4G1100-R140

FIG. 14 GENERATOR

REF. NO.	PART NO.	DESCRIPTION	F5S2					REMARKS
1	8FA–15515–00	GEAR 3	1					
2	2HC–15512–00	GEAR, IDLER 1	1					
3	8ES–15521–00	SHAFT 1	1					
4	6EY–15590–00	STARTER ONE-WAY ASSY	1					
5	90110–08212	BOLT, HEXAGON SOCKET HEAD	6					
6	90201–30013	WASHER, PLATE	1					
7	6EY–81450–01	ROTOR ASSY	1					
8	6EY–81410–02	STATOR ASSY	1					
9	91317–06035	BOLT, HEXAGON SOCKET HEAD	3					
10	60E–81328–00	CLAMP	1					
11	91317–06014	BOLT, HEXAGON SOCKET HEAD	2					
12	97513–05514	BOLT, WITH WASHER	2					

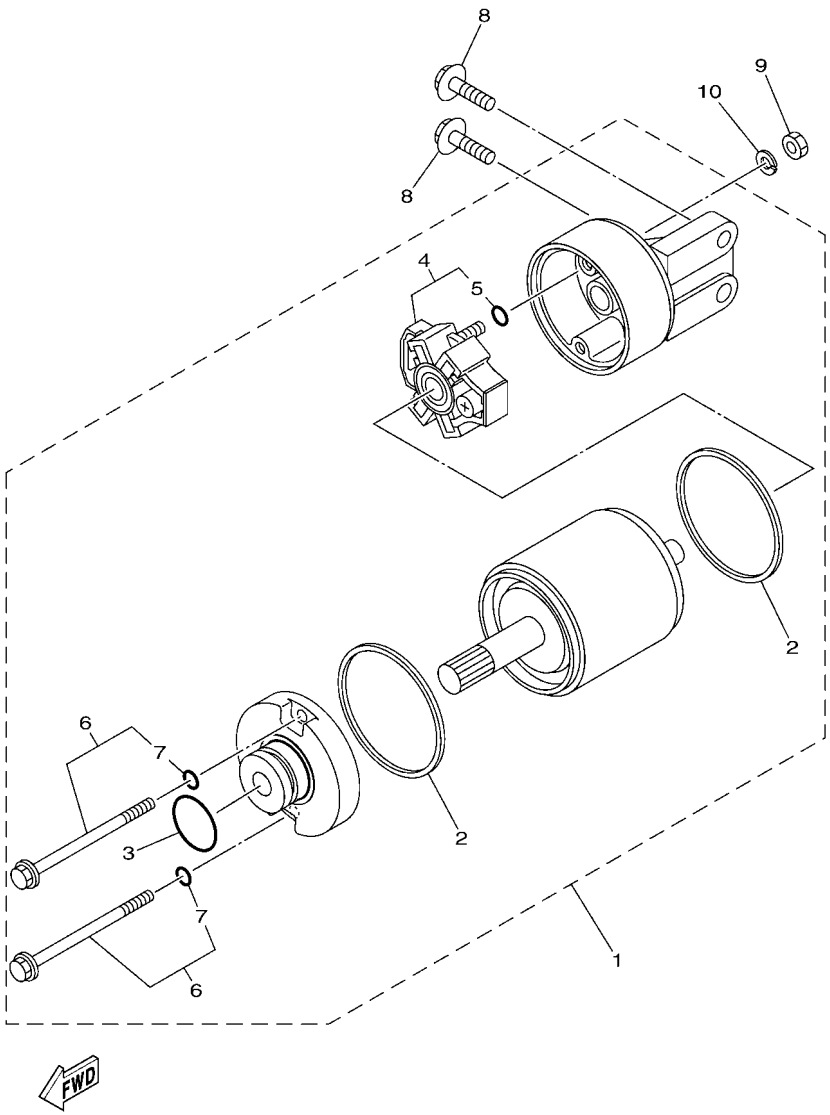

FIG. 15 STARTING MOTOR

REF. NO.	PART NO.	DESCRIPTION	F5S2					REMARKS
1	6EY–81800–00	STARTING MOTOR ASSY	1					
2	11H–81844–00	.GASKET	2					
3	1FK–81847–00	.O-RING	1					
4	6EY–81840–00	.BRUSH HOLDER ASSY	1					
5	3TB–81847–00	..O-RING	1					
6	6EY–81826–00	.BOLT	2					
7	3TB–81847–00	..O-RING	1					
8	97513–08530	BOLT, WITH WASHER	2					
9	95380–06700	NUT	1					
10	92990–06100	WASHER, SPRING	1					

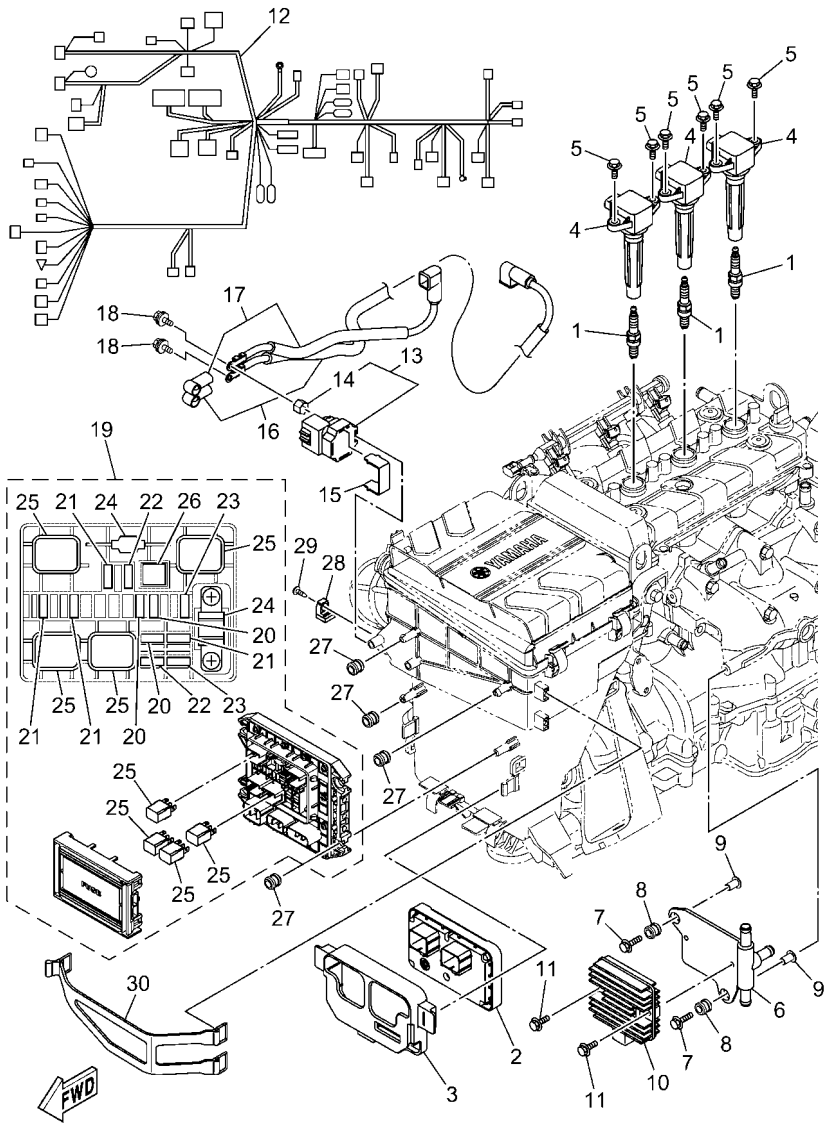

F5S1100-0160

FIG. 16 ELECTRICAL 1

REF. NO.	PART NO.	DESCRIPTION	F5S2					REMARKS
1	94702–00409	PLUG, SPARK (NGK CR9EB)	3					
2	6GA–8591A–40	ENGINE CONTROL UNIT ASSY	1					
3	6EY–8591S–00	GROMMET, ECU	1					
4	6EX–82310–02	IGNITION COIL ASSY	3					
5	95880–06016	BOLT, FLANGE	6					
6	6EY–81975–00	PLATE, RECTIFIER FITTING	1					
7	90119–06311	BOLT, WITH WASHER	2					
8	6A0–82317–01	DAMPER, IGNITION COIL	2					
9	90387–06119	COLLAR	2					
10	6D3–81960–01	RECTIFIER & REGULATOR ASSY	1					
11	95814–06020	BOLT, FLANGE	2					
12	6GA–8259L–60	WIRE HARNESS ASSY 1	1					
13	6EY–81940–09	STARTER RELAY ASSY	1					
14	6EY–82355–00	.GROMMET	1					
15	6EY–81953–00	STAY, RELAY	1					
16	6GA–82115–01	WIRE, PLUS LEAD	1					
17	6EY–82117–00	WIRE, LEAD	1					
18	97E95–06612	BOLT, HEXAGON W/W DEEP RECESS	2					
19	6EX–82170–02	FUSE BOX ASSY	1					
20	67F–82151–30	.FUSE (3A)	3					
21	67F–82151–40	.FUSE (10A)	4					
22	67F–82151–00	.FUSE (20A)	2					
23	67F–82151–10	.FUSE (30A)	2					
24	6EX–82151–00	.FUSE (50A)	2					
25	6EX–8195A–00	.RELAY ASSY	4					
26	6EX–2812A–00	.PULLER, FUSE	1					
27	6A0–82317–01	DAMPER, IGNITION COIL	4					

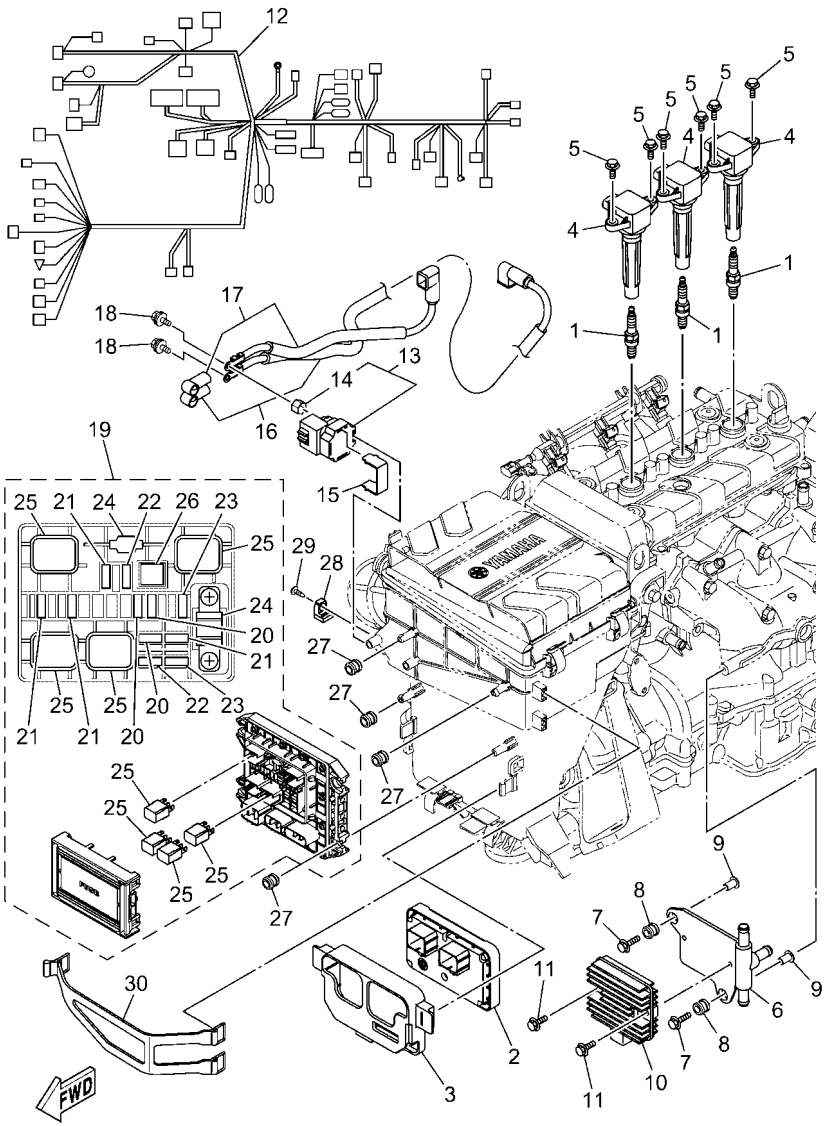

F5S1100-0160

FIG. 16 ELECTRICAL 1

REF. NO.	PART NO.	DESCRIPTION	F5S2					REMARKS
28	6AA–85542–00	BRACKET	1					
29	90160–05003	SCREW, ROUND TAPPING	1					
30	6EY–82593–01	BAND	1					

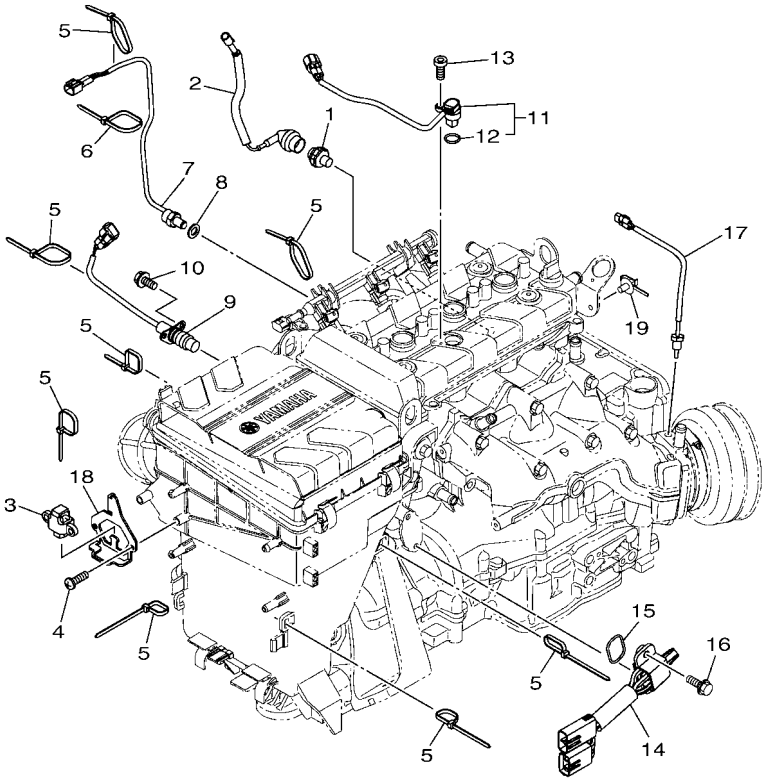

F3YD100-U170

FIG. 17 ELECTRICAL 2

REF. NO.	PART NO.	DESCRIPTION	F5S2					REMARKS
1	68V–82504–00	OIL PRESSURE SWITCH ASSY	1					
2	60E–81315–01	LEAD WIRE ASSY	1					
3	6ET–82576–00	SENSOR, LEAN ANGLE	1					
4	97780–60520	SCREW, TAPPING	2					
5	90464–35132	CLAMP	8					
6	90465–13M39	CLAMP	1					
7	61A–85790–01	THERMOSENSOR ASSY	1					
8	92990–10600	WASHER, PLATE	1					
9	6CR–82560–00	THERMO SWITCH ASSY	1					
10	97E95–06520	BOLT, HEXAGON W/W DEEP RECESS	2					
11	2S3–85896–02	SENSOR, CAM POSITION	1					
12	4D9–81168–00	.O-RING	1					
13	91380–06016	BOLT	1					
14	6CS–8273J–11	EARTH PLATE COMP.	1					
15	93210–32172	O-RING	1					
16	90119–06MA3	BOLT, WITH WASHER	2					
17	6DE–85790–00	THERMOSENSOR ASSY	1					
18	6EY–83618–10	PLATE	1					
19	90464–20005	CLAMP	1					

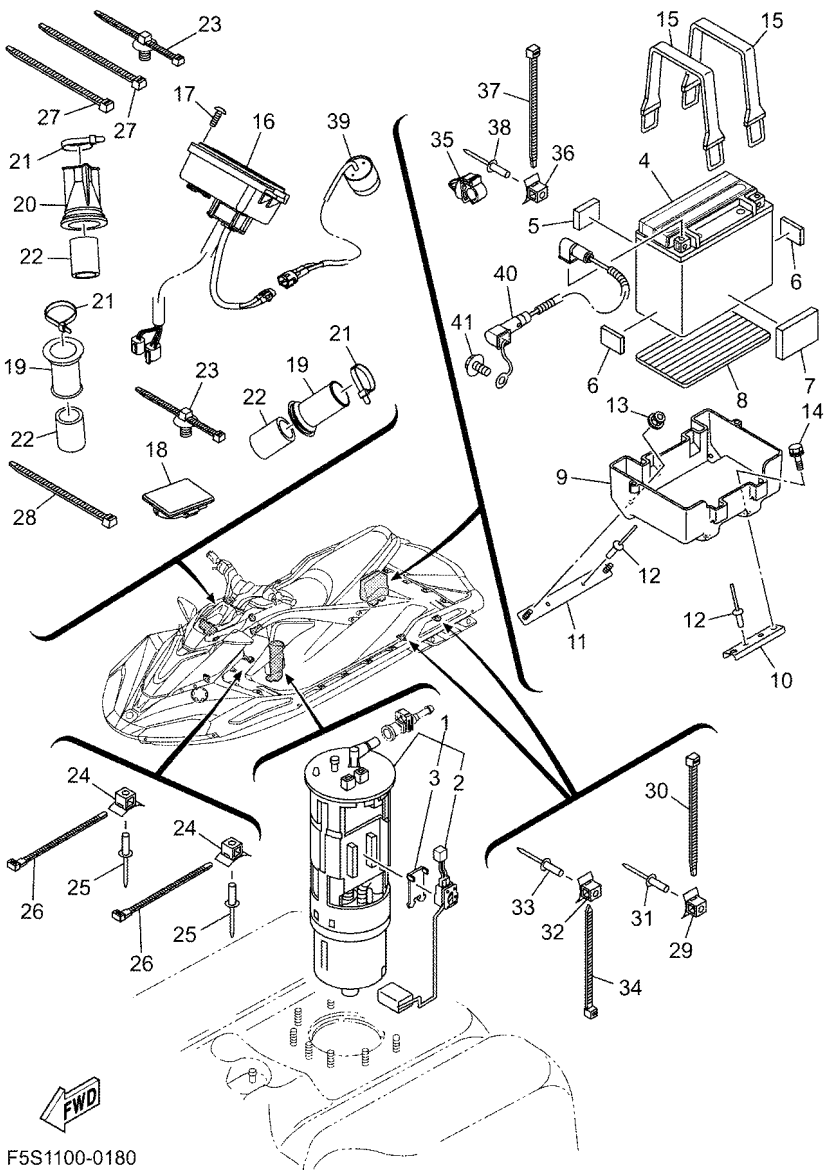

FIG. 18 ELECTRICAL 3

REF. NO.	PART NO.	DESCRIPTION	F5S2					REMARKS
1	6S5–13907–05	FUEL PUMP COMP.	1					
2	6S5–682E0–10	.FUEL SENDER ASSY	1					
3	60E–82556–10	.DAMPER, STOPPER	1					
4	5FU–H2100–21	BATTERY ASSY (YUASA YTX20L-BS)	1					
5	F2C–U1743–00	PACKING	1					
6	EU0–U8221–31	PAD, BATTERY	2					
7	F1W–U759C–01	MAT 2	1					
8	F1S–U8221–00	PAD, BATTERY	1					
9	F2S–U8211–00	CASE, BATTERY	1					
10	F2S–U8592–00	PLATE, BASE 2	1					
11	F2S–U8593–00	PLATE, BASE 3	1					
12	90267–489U1	RIVET,BLIND	4					
13	F2N–U142L–00	NUT, LOCK	2					
14	90119–06832	BOLT, WITH WASHER	2					
15	F4P–U821D–00	BAND, BATTERY 1	2					
16	F5S–U820A–00	METER ASSY	1					
17	F2S–U7823–01	SCREW	2					
18	F4P–U5568–00	CAP	1					
19	GU2–6822E–01	GROMMET	2					
20	F3J–U822E–01	GROMMET	1					
21	90464–32801	CLAMP	3					
22	GJ1–U7578–22	PACKING, HOSE 2	3					
23	1NS–F1338–00	CLAMP	2					
24	F1W–U828M–00	BASE, CLAMP	2					
25	90267–48806	RIVET, BLIND	2					
26	90464–32801	CLAMP	2					
27	F2C–U4256–00	CLAMP	2					

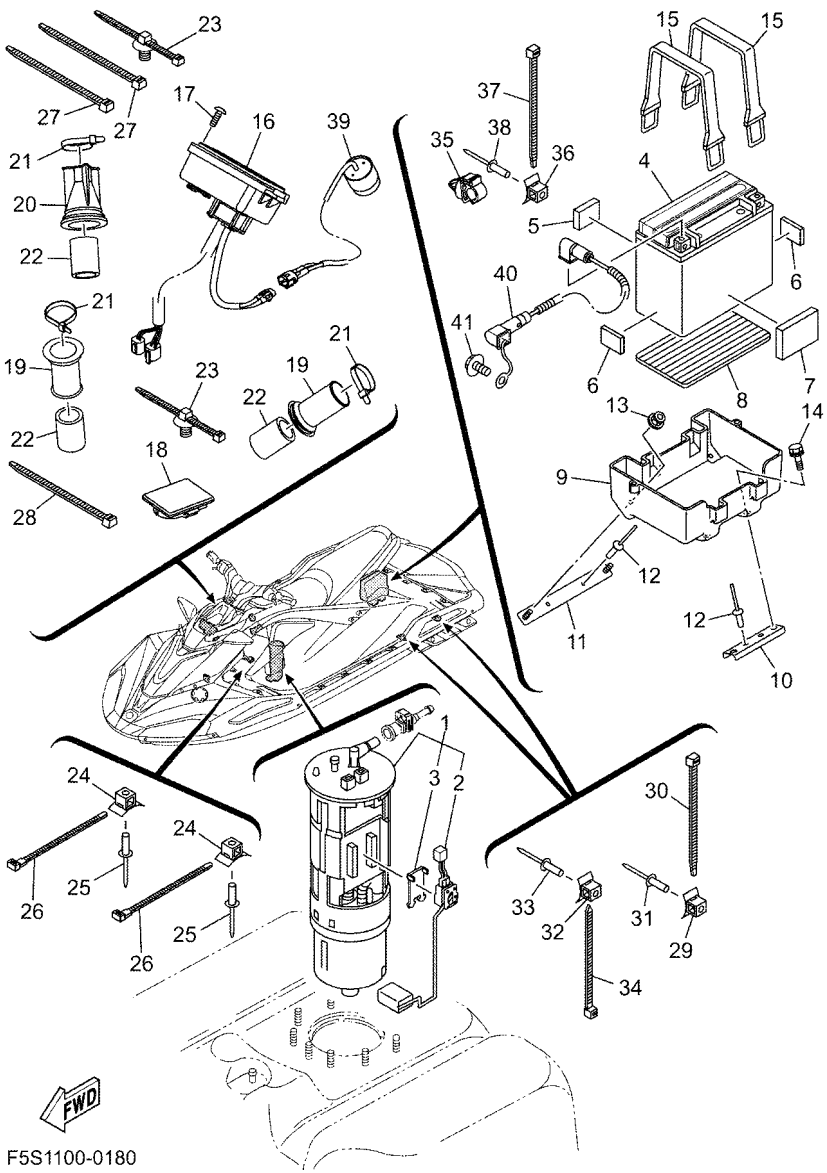

FIG. 18 ELECTRICAL 3

REF. NO.	PART NO.	DESCRIPTION	F5S2					REMARKS
28	F2C–U4256–00	CLAMP	1					
29	F1W–U828M–00	BASE, CLAMP	2					
30	90464–32801	CLAMP	2					
31	90267–48806	RIVET, BLIND	2					
32	F1W–U828M–00	BASE, CLAMP	2					
33	90267–48806	RIVET, BLIND	2					
34	90464–32801	CLAMP	2					
35	90464–10008	CLAMP	1					
36	F1W–U828M–00	BASE, CLAMP	1					
37	90464–32801	CLAMP	1					
38	90267–48806	RIVET, BLIND	1					
39	F1S–68341–00	BUZZER	1					
40	6GA–82116–00	WIRE, MINUS LEAD	1					
41	97513–08514	BOLT, WITH WASHER	1					

FIG. 19 ENGINE MOUNT

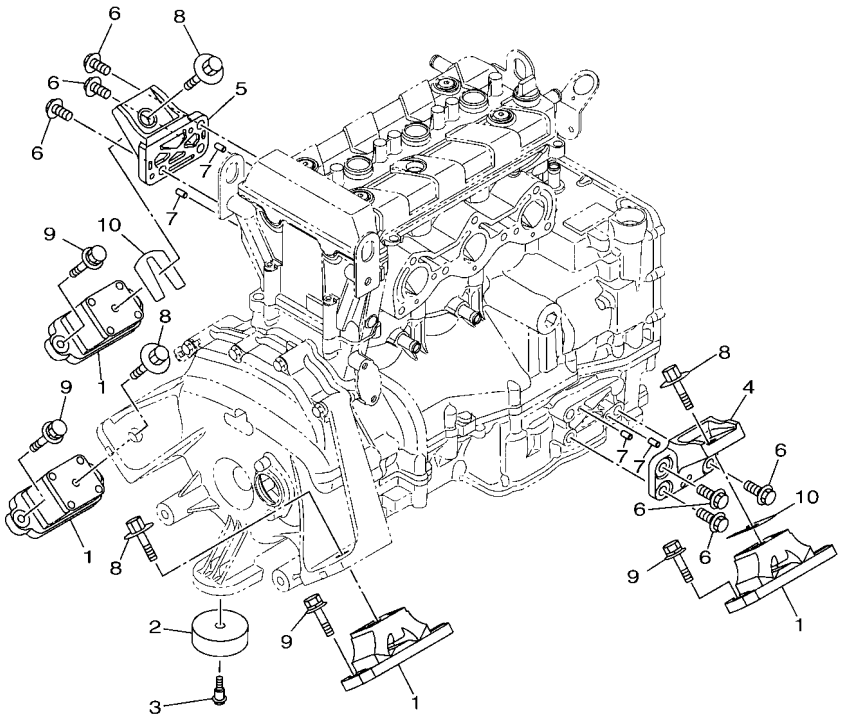

F3YK100-W190

REF. NO.	PART NO.	DESCRIPTION	F5S2					REMARKS
1	6GA–44517–00	MOUNT RUBBER	4					
2	6EY–44574–00	STOPPER, LOWER MOUNT RUBBER	1					
3	90109–06M92	BOLT	1					
4	6EY–41661–10	BRACKET 1	1					
5	6EY–41662–00	BRACKET 2	1					
6	90105–10M49	BOLT, FLANGE	6					
7	93606–12019	PIN, DOWEL	4					
8	90119–08859	BOLT, WITH WASHER	4					
9	90119–08823	BOLT, WITH WASHER	8					
10	EU0–U7354–00–01	SHIM (T=0.1)	4					UN
	EU0–U7354–00–03	SHIM (T=0.3)	4					UN
	EU0–U7354–00–05	SHIM (T=0.5)	4					UN
	EU0–U7354–00–10	SHIM (T=1.0)	4					UN
	EU0–U7354–00–20	SHIM (T=2.0)	4					UN

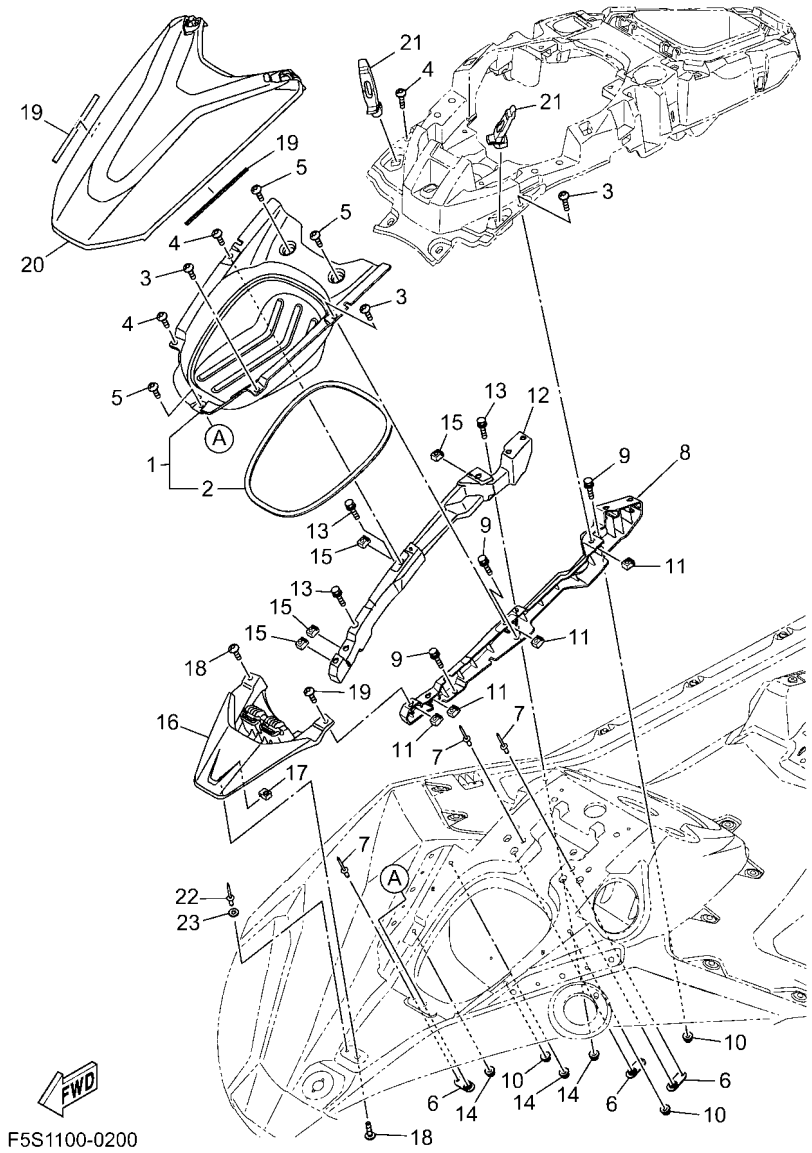

F5S1100-0200

FIG. 20 ENGINE HATCH 1

REF. NO.	PART NO.	DESCRIPTION	F5S2					REMARKS
1	F5P–U475A–00	BOWLOCKER ASSY	1					
2	F3Y–U2663–00	.PACKING 1	1					
3	F5G–U7823–09	SCREW	3					
4	F5G–U7823–09	SCREW	3					
5	F5G–U7823–00	SCREW	3					
6	F2X–U5175–00	PLATE, FIX	3					
7	F4P–U516R–01	RIVET 1	3					
8	F5P–U377M–00	BRKT., COVER SIDE 1	1					
9	90119–06892	BOLT, WITH WASHER	3					
10	F2N–U142L–00	NUT, LOCK	3					
11	F3X–U517E–00	NUT	4					
12	F5P–U377N–00	BRKT, COVER SIDE 2	1					
13	90119–06892	BOLT, WITH WASHER	3					
14	F2N–U142L–00	NUT, LOCK	3					
15	F3X–U517E–00	NUT	4					
16	F5P–U513M–00	COVER, FRONT	1					
17	F3X–U517E–00	NUT	1					
18	F5G–U7823–09	SCREW	3					
19	F4L–U266B–01	PACKING 3	2					
20	F5P–U519F–00	OUTER, ENGINE HATCH	1					
21	F5P–U264L–00	LOCK 1	2					
22	F4P–U516R–01	RIVET 1	1					
23	9299R–05200	WASHER	1					

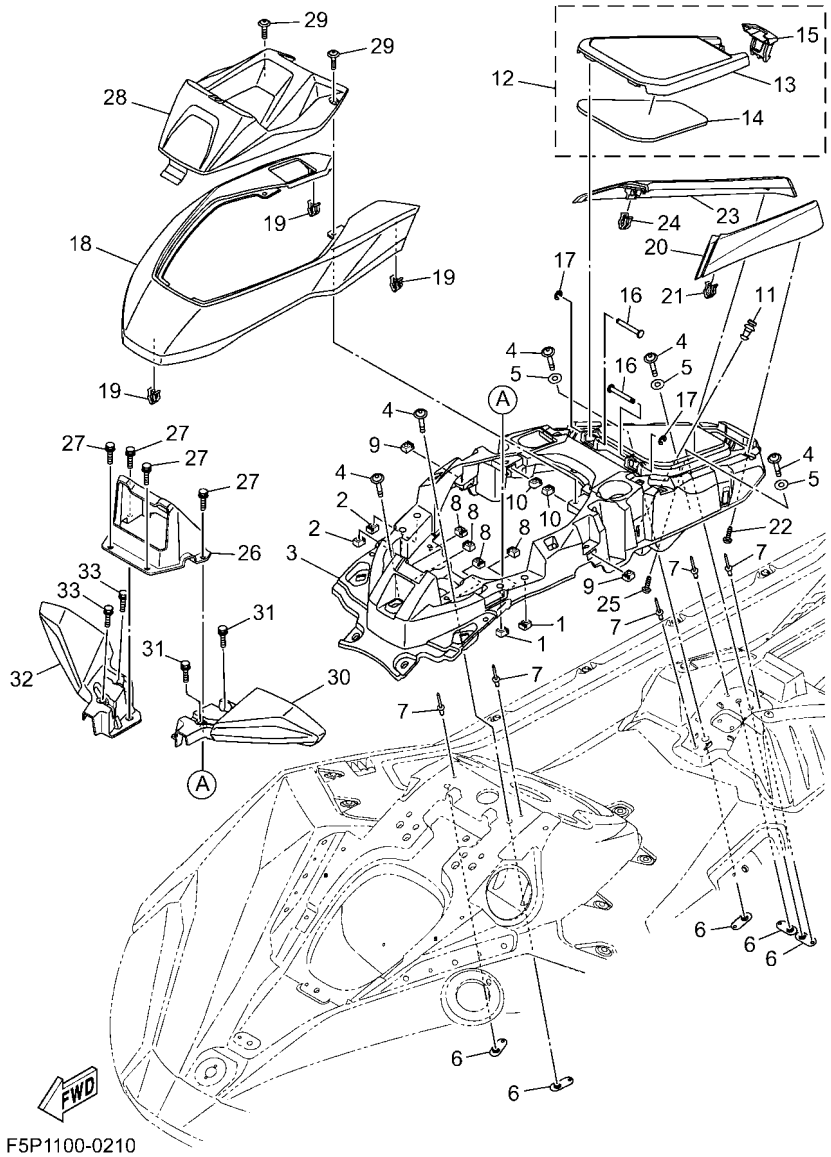

FIG. 21 ENGINE HATCH 2

REF. NO.	PART NO.	DESCRIPTION	F5S2					REMARKS
1	F3X–U517E–00	NUT	2					
2	F3X–U517E–00	NUT	2					
3	F5P–U5554–00	COVER, CENTER	1					
4	F5G–U6829–00	SCREW	5					
5	F5P–U1439–00	PACKING	3					
6	F2X–U5175–00	PLATE, FIX	5					
7	F4P–U516R–01	RIVET 1	5					
8	F3X–U517E–00	NUT	4					
9	F3X–U517E–00	NUT	2					
10	F3X–U517E–00	NUT	2					
11	F3X–U2723–00	SEAL	1					
12	F5P–U4705–00	GLOVE BOX COVER ASSY	1					
13	F5P–U517H–00	.LID HATCH	1					
14	F5P–U519D–00	.PACKING CASE	1					
15	F4N–U2875–00	.LOCK	1					
16	F5P–U517R–00	PIN, HINGE	2					
17	F5G–U515C–00	E-RING	2					
18	F5P–U516N–20	COVER, ENGINE HATCH	1					
19	F3Y–U153K–00	CLIP	3					
20	F5P–U517W–20	ORNAMENT LH	1					
21	F3Y–U153K–00	CLIP	1					
22	F2S–U13C1–00	SCREW	1					
23	F5P–U517X–20	ORNAMENT RH	1					
24	F3Y–U153K–00	CLIP	1					
25	F2S–U13C1–00	SCREW	1					
26	F5P–U8238–00	BRACKET, METER	1					
27	90119–06892	BOLT, WITH WASHER	4					

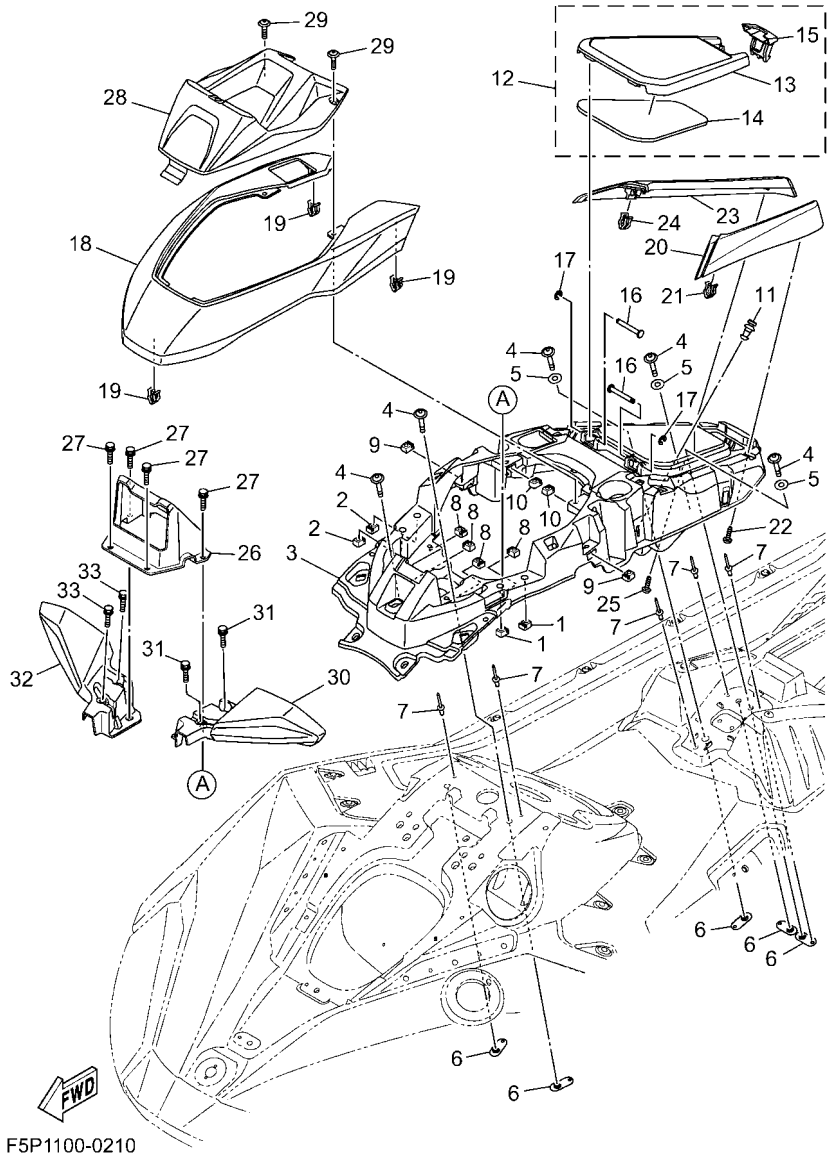

FIG. 21 ENGINE HATCH 2

REF. NO.	PART NO.	DESCRIPTION	F5S2					REMARKS
28	F5P–U8262–01	COVER METER	1					
29	F3X–U7823–12	SCREW	2					
30	F5P–U596B–00	MIRROR LH	1					
31	90119–06892	BOLT, WITH WASHER	2					
32	F5P–U596C–00	MIRROR RH	1					
33	90119–06892	BOLT, WITH WASHER	2					

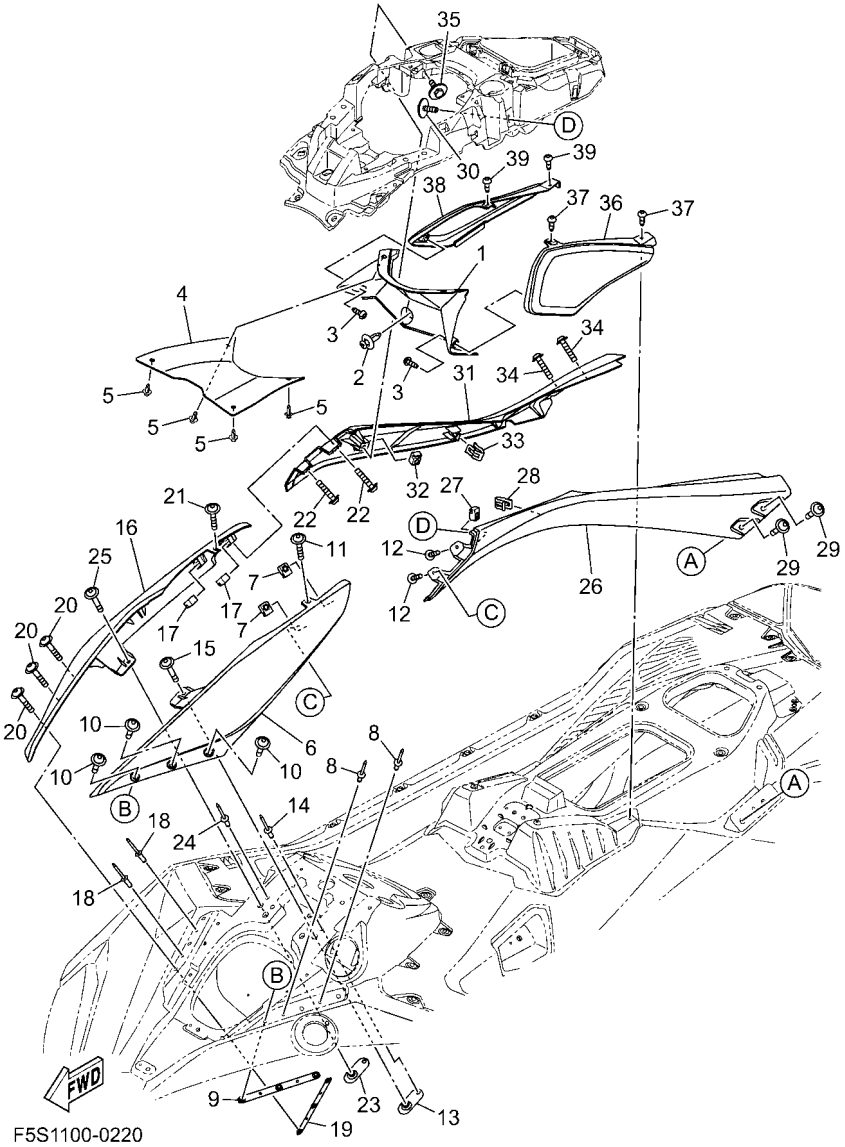

FIG. 22 ENGINE HATCH 3

REF. NO.	PART NO.	DESCRIPTION	F5S2					REMARKS
1	F5P–U4785–00	COVER, GLOVE BOX	1					
2	F4P–U1454–00	RIVET	1					
3	F2S–U13C1–00	SCREW	2					
4	F5P–U4755–00	PLATE, GLOVE BOX	1					
5	F4P–U1454–00	RIVET	4					
6	F5P–U377B–01	COVER, SIDE 1	1					
7	F3X–U517E–00	NUT	2					
8	F4P–U516R–01	RIVET 1	2					
9	F5M–U0511–00	BRACKET 1	1					
10	F5G–U6829–00	SCREW	3					
11	F5G–U6829–09	SCREW	1					
12	F5G–U6829–09	SCREW	2					
13	F2X–U5175–00	PLATE, FIX	1					
14	F4P–U516R–01	RIVET 1	1					
15	F5G–U6829–00	SCREW	1					
16	F5P–U377C–01	COVER, SIDE 2	1					
17	F3X–U517E–00	NUT	2					
18	F4P–U516R–01	RIVET 1	2					
19	F5M–U0511–00	BRACKET 1	1					
20	F5G–U6829–00	SCREW	3					
21	F5G–U6829–09	SCREW	1					
22	F5G–U6829–09	SCREW	2					
23	F2X–U5175–00	PLATE, FIX	1					
24	F4P–U516R–01	RIVET 1	1					
25	F5G–U6829–00	SCREW	1					
26	F5P–U3663–10	FRAME	1					
27	F3X–U517E–00	NUT	1					

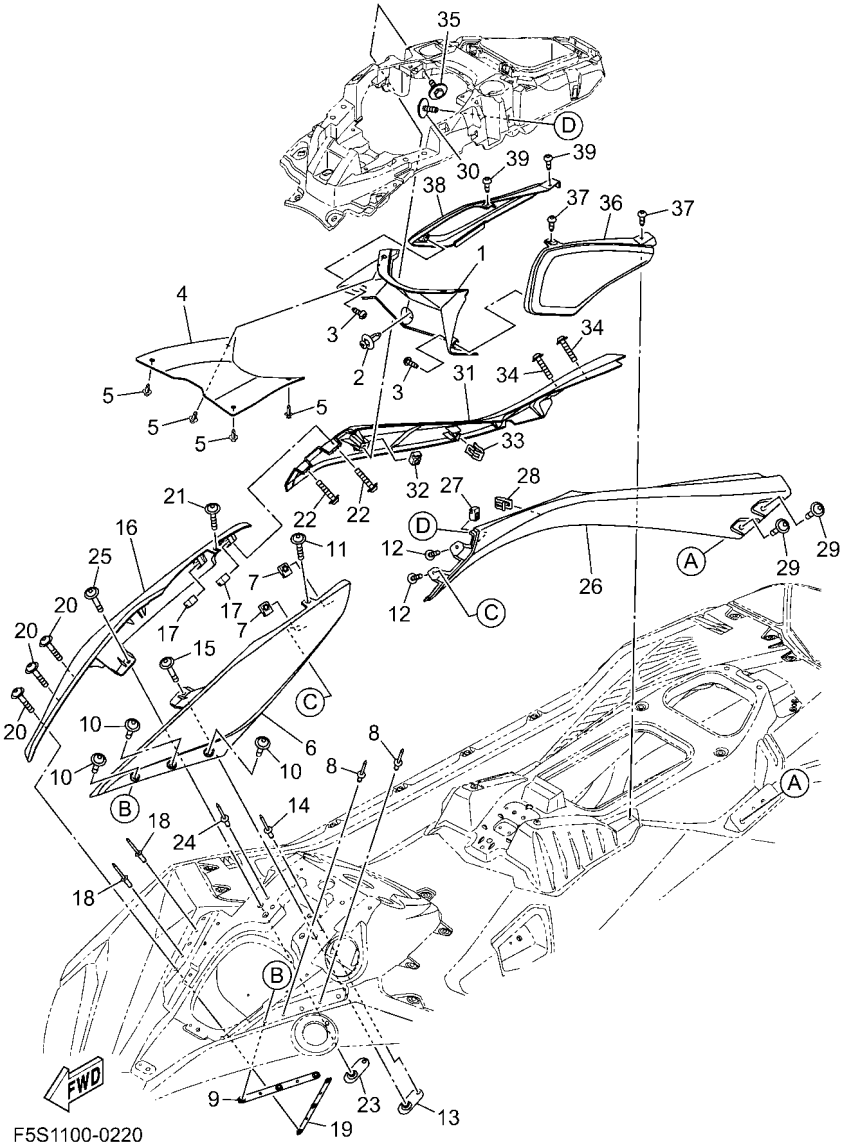

FIG. 22 ENGINE HATCH 3

REF. NO.	PART NO.	DESCRIPTION	F5S2					REMARKS
28	F3Y–U153K–00	CLIP	1					
29	F5G–U6829–00	SCREW	2					
30	F3X–U13B4–00	BOLT	1					
31	F5P–U3664–10	FRAME	1					
32	F3X–U517E–00	NUT	1					
33	F3Y–U153K–00	CLIP	1					
34	F5G–U6829–00	SCREW	2					
35	F3X–U13B4–00	BOLT	1					
36	F5P–U353C–00	PAD, KNEE 1	1					
37	F2S–U13C1–00	SCREW	2					
38	F5P–U353D–00	PAD, KNEE 2	1					
39	F2S–U13C1–00	SCREW	2					

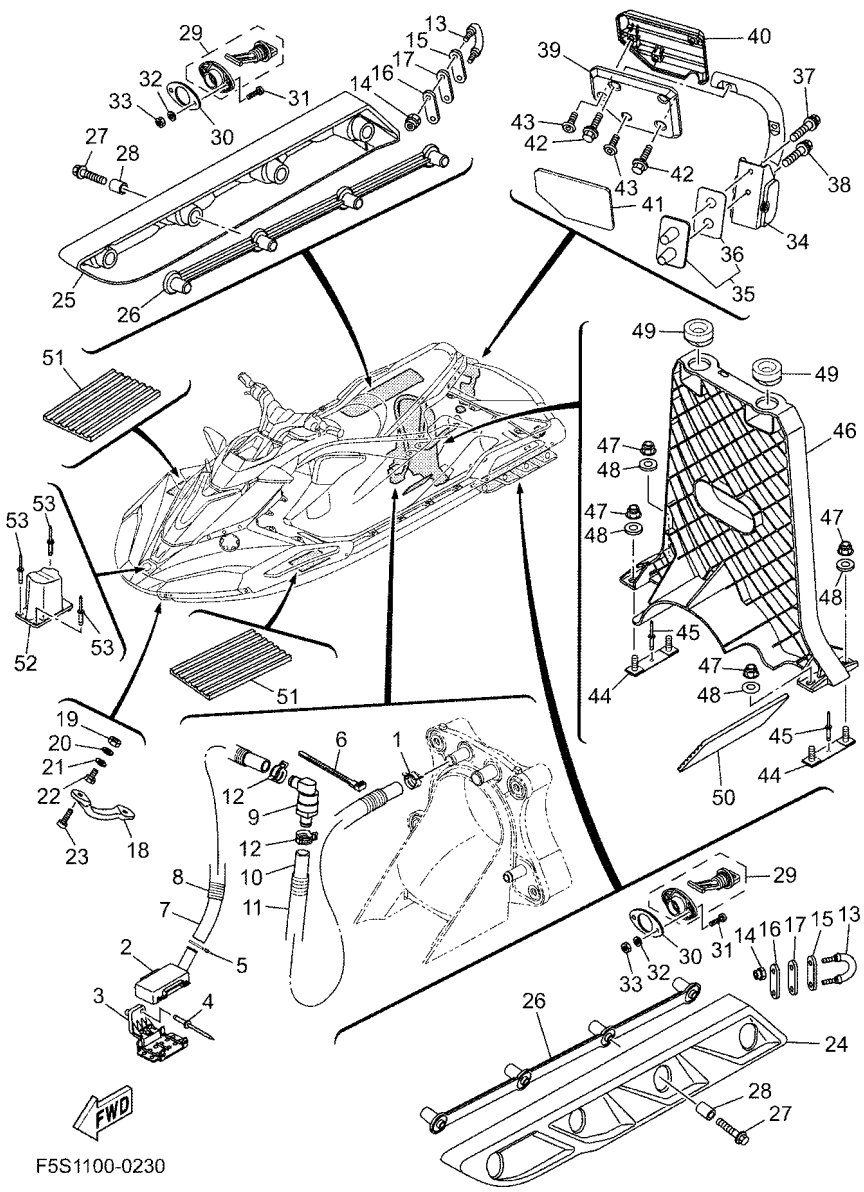

FIG. 23 HULL & DECK

REF. NO.	PART NO.	DESCRIPTION	F5S2					REMARKS
1	90467–180A5	CLIP	1					
2	F5P–U761D–00	STRAINER, BILGE	1					
3	F5P–U7698–00	BRACKET	1					
4	90267–489U8	RIVET, BLIND	1					
5	90465–11829	CLAMP	1					
6	90601–200U2	BAND	1					
7	F5P–U784C–00	HOSE	1					
8	F3Y–U773D–11	TUBE	1					
9	68N–5112T–00	JOINT, HOSE	1					
10	F5P–U784C–00	HOSE	1					
11	F3Y–U773D–11	TUBE	1					
12	90467–180A5	CLIP	2					
13	F2N–U1628–10	STERN EYE	2					
14	9572R–08300	NUT, FLANGE	4					
15	GP7–U4953–10	PLATE A	2					
16	GP7–U4953–10	PLATE A	2					
17	F1B–U1653–03	PACKING	2					
18	F1K–61624–00	BOW EYE 1	1					
19	99780–12600	NUT.HEX.(COARS)	2					
20	92990–12200	WASHER, PLAIN	2					
21	F0X–61637–00	WASHER	2					
22	F0X–61652–01	NUT	2					
23	90110–06040	BOLT, HEXAGON SOCKET HEAD	2					
24	F5P–U885N–00	BODY, STABILIZER LH	1					
25	F5P–U885P–00	BODY, STABILIZER RH	1					
26	F2S–U883T–00	BRACKET,STABILIZER	2					
27	90105–08860	BOLT, FLANGE	8					

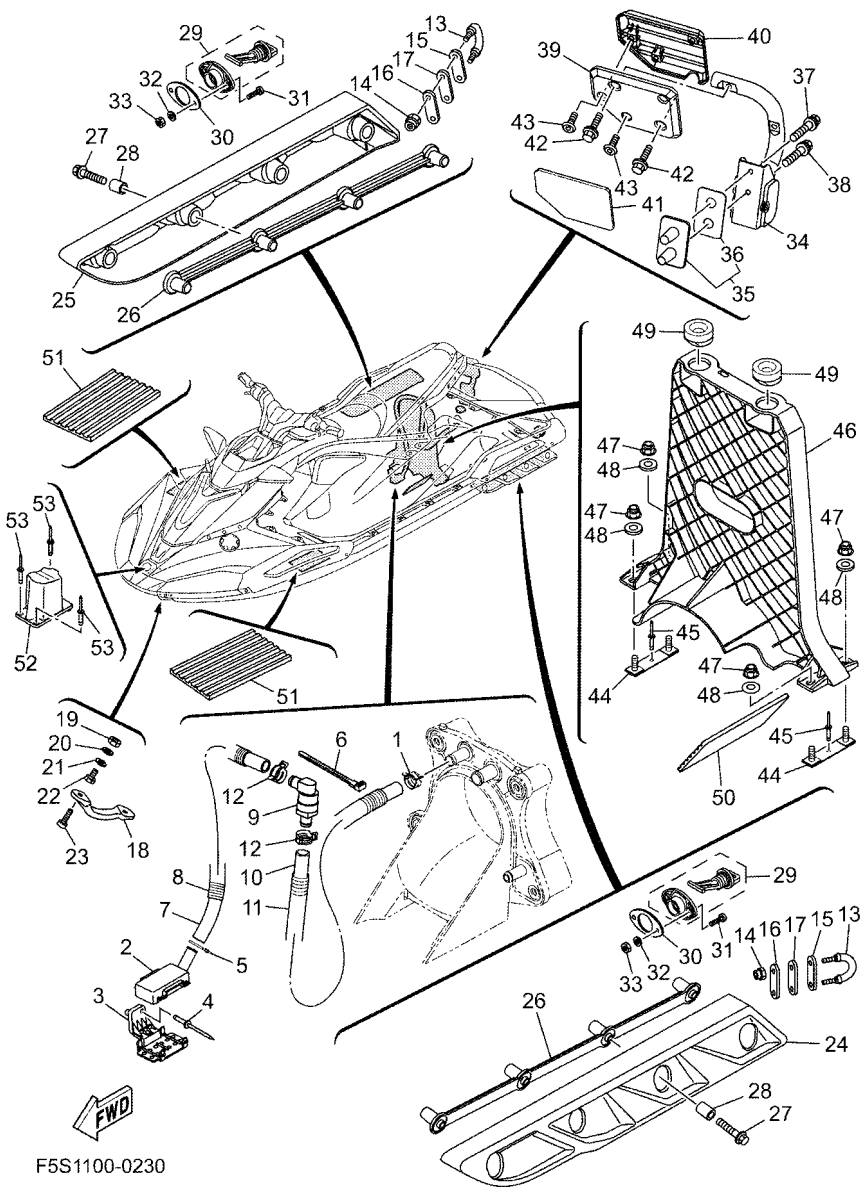

FIG. 23 HULL & DECK

REF. NO.	PART NO.	DESCRIPTION	F5S2					REMARKS
28	F2N–U8169–10	SPACER	8					
29	F1S–U2280–02	DRAIN PLUG ASSY.	2					
30	F1S–U2285–01	PACKING, DRAIN	2					
31	9788R–05025	SCREW, PAN HEAD	4					
32	9299R–05200	WASHER	4					
33	9572R–05300	NUT, FLANGE	4					
34	F5P–U278A–00	LADDER, STEP ASSY	1					
35	F2S–U278F–01	BRACKET, LADDER LH	1					
36	F2S–U278H–01	.PACKING, BRKT. 1	1					
37	90119–08861	BOLT, WITH WASHER	1					
38	90119–08861	BOLT, WITH WASHER	1					
39	F5P–U882F–00	STEP	1					
40	F5P–U884R–00	PLATE, STEP 1	1					
41	F5P–U4994–10	COVER STEP 1	1					
42	90119–06891	BOLT, WITH WASHER	2					
43	F2S–U13C1–00	SCREW	3					
44	F1K–U826C–03	BRACKET	2					
45	90267–489U1	RIVET,BLIND	2					
46	F5P–U8702–00	FRAME COMP. 2	1					
47	F3Y–U142L–00	NUT, LOCK	4					
48	9299R–08200	WASHER	4					
49	J0P–F4742–00	GROMMET	2					
50	F1S–U8221–00	PAD, BATTERY	1					
51	F1S–U8221–00	PAD, BATTERY	2					
52	F5P–U5545–00	PAD, LOCK	1					
53	90267–489U2	RIVET, BLIND	3					

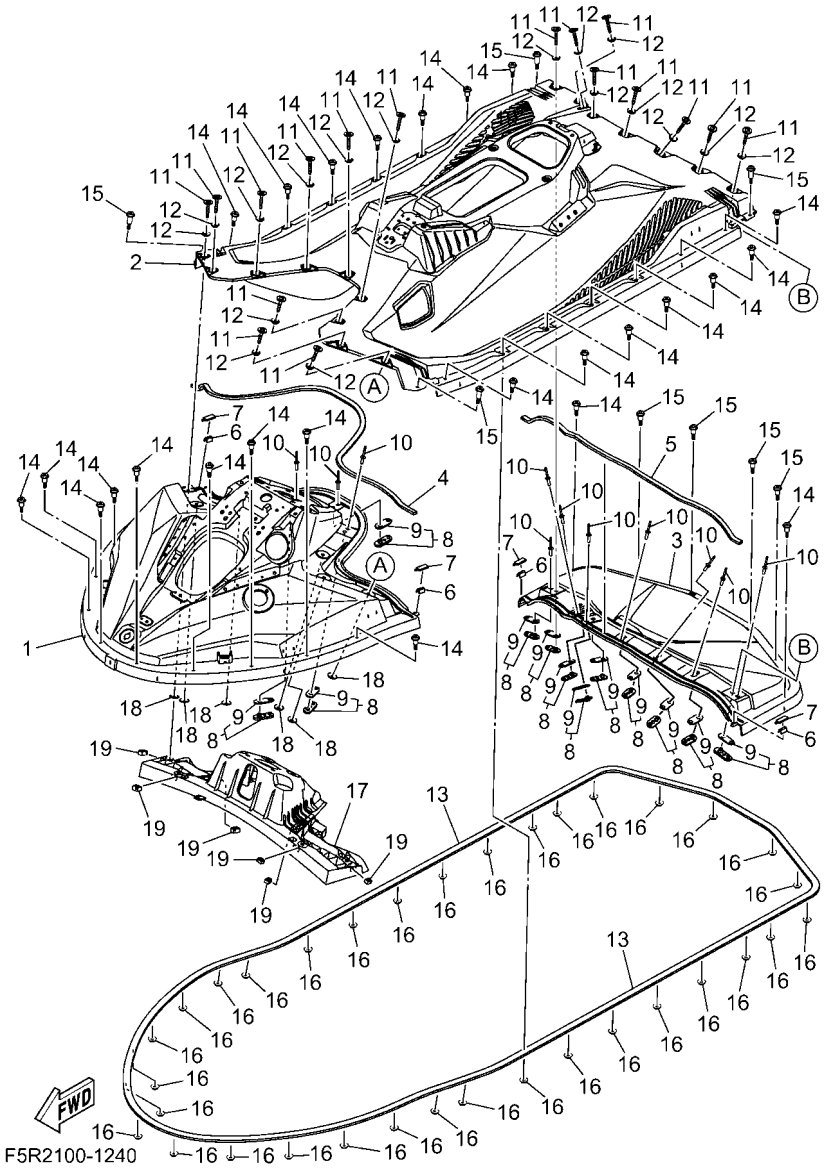

FIG. 24 DECK 1

REF. NO.	PART NO.	DESCRIPTION	F5S2					REMARKS
1	F5P–U5207–70	BOW DECK COMP.	1					
2	F5P–U89K1–60	MIDDLE DECK	1					
3	F5P–U89C1–60	REAR DECK	1					
4	F5P–U884B–00	SEAL 1	1					
5	F5P–U884C–00	SEAL 2	1					
6	F5P–U7747–01	PACKING, SEAL	4					
7	F5R–U7747–00	PACKING, SEAL	4					
8	F5P–U411B–00	PLATE ASSY	11					
9	F5P–U266H–01	.PACKING 9	1					
10	F4P–U516R–01	RIVET 1	11					
11	F5R–U491K–00	BOLT, SPECIAL	17					
12	F5P–U2318–00	WASHER, SPECIAL	17					
13	F5P–U0132–00	PACKING	2					
14	F5P–U723D–00	BOLT, SPECIAL 1	30					
15	F5P–U723E–00	BOLT, SPECIAL 2	4					
16	F2N–U142L–00	NUT, LOCK	34					
17	F5P–U8701–00	FRAME COMP. 1	1					
18	F5P–U266C–00	PACKING 4	6					
19	F3X–U517E–00	NUT	7					

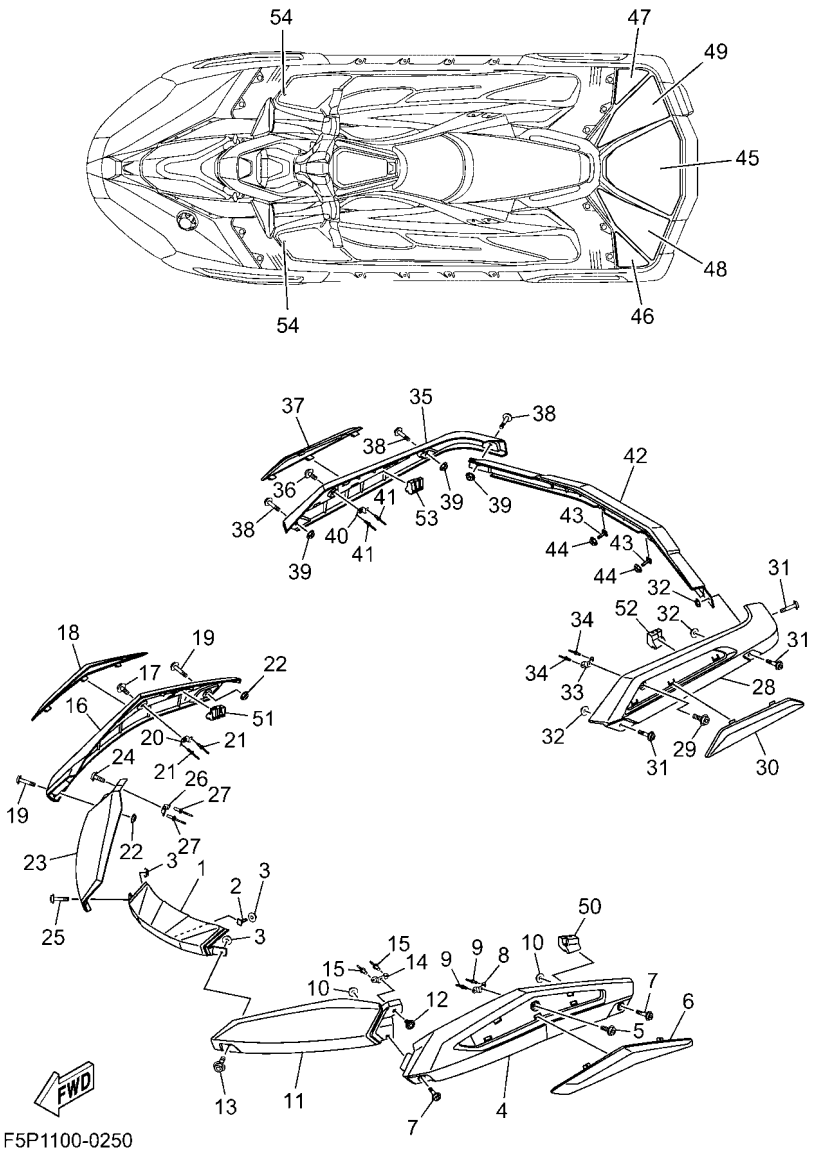

F5P1100-0250

FIG. 25 GUNWALE & MAT

REF. NO.	PART NO.	DESCRIPTION	F5S2					REMARKS
1	F5P–U2511–01	GUNWALE, BOW	1					BLACK
2	F5M–U491K–00	BOLT, SPECIAL	1					
3	F2N–U142L–00	NUT, LOCK	3					
4	F5P–U256C–00	GUARD, GUNWALE 1	1					BLACK
5	F7K–U8198–00	SCREW	1					
6	F5P–U2535–40	CORE, GUNWALE 1	1					WHITE
7	F5G–U6829–09	SCREW	2					
8	F3X–U4949–00	BRACKET	1					
9	90267–489U6	RIVET, BLIND	2					
10	F2N–U142L–00	NUT, LOCK	2					
11	F5P–U252E–01	JOINT, GUNWALE LH	1					BLACK
12	F7K–U8198–00	SCREW	1					
13	F5G–U6829–09	SCREW	1					
14	F3X–U4949–00	BRACKET	1					
15	90267–489U6	RIVET, BLIND	2					
16	F5P–U256D–00	GUARD, GUNWALE 2	1					BLACK
17	F7K–U8198–00	SCREW	1					
18	F5P–U2536–40	CORE, GUNWALE 2	1					WHITE
19	F5G–U6829–09	SCREW	2					
20	F3X–U4949–00	BRACKET	1					
21	90267–489U6	RIVET, BLIND	2					
22	F2N–U142L–00	NUT, LOCK	2					
23	F5P–U252F–01	JOINT, GUNWALE RH	1					BLACK
24	F7K–U8198–00	SCREW	1					
25	F5G–U6829–09	SCREW	1					
26	F3X–U4949–00	BRACKET	1					
27	90267–489U6	RIVET, BLIND	2					

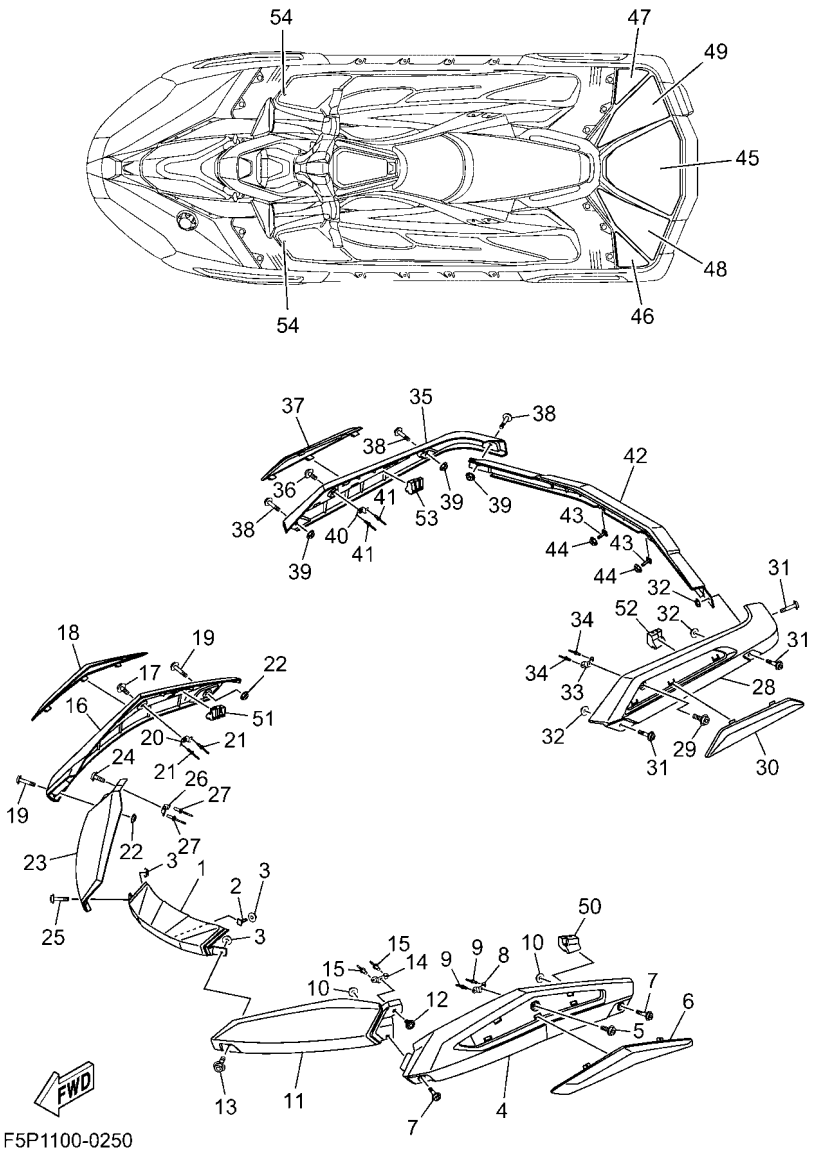

F5P1100-0250

FIG. 25 GUNWALE & MAT

REF. NO.	PART NO.	DESCRIPTION	F5S2					REMARKS
28	F5P–U251D–00	GUNWALE, STERN 1	1					BLACK
29	F7K–U8198–00	SCREW	1					
30	F5P–U2537–40	CORE, GUNWALE	1					WHITE
31	F5G–U6829–09	SCREW	3					
32	F2N–U142L–00	NUT, LOCK	3					
33	F3X–U4949–00	BRACKET	1					
34	90267–489U6	RIVET, BLIND	2					
35	F5P–U251E–00	GUNWALE, STERN 2	1					BLACK
36	F7K–U8198–00	SCREW	1					
37	F5P–U2538–40	CORE, GUNWALE	1					WHITE
38	F5G–U6829–09	SCREW	3					
39	F2N–U142L–00	NUT, LOCK	3					
40	F3X–U4949–00	BRACKET	1					
41	90267–489U6	RIVET, BLIND	2					
42	F5P–U252C–01	COVER, GUNWALE 1	1					BLACK
43	F5M–U491K–00	BOLT, SPECIAL	2					
44	F2N–U142L–00	NUT, LOCK	2					
45	F5P–U3581–00	MAT, UPPER	1					BLACK/CYAN
46	F5P–U351N–00	MAT, STEP 5	1					BLACK/CYAN
47	F5P–U351P–00	MAT, STEP 6	1					BLACK/CYAN
48	F5P–U351R–00	MAT, STEP 7	1					BLACK/CYAN
49	F5P–U351S–00	MAT, STEP 8	1					BLACK/CYAN
50	F5P–UM8U0–00	PLUG 1	1					
51	F5P–UM8U1–00	PLUG 2	1					
52	F5P–UM8U2–00	PLUG 3	1					
53	F5P–UM8U3–00	PLUG 4	1					
54	F5P–U358B–00	PLUG	2					

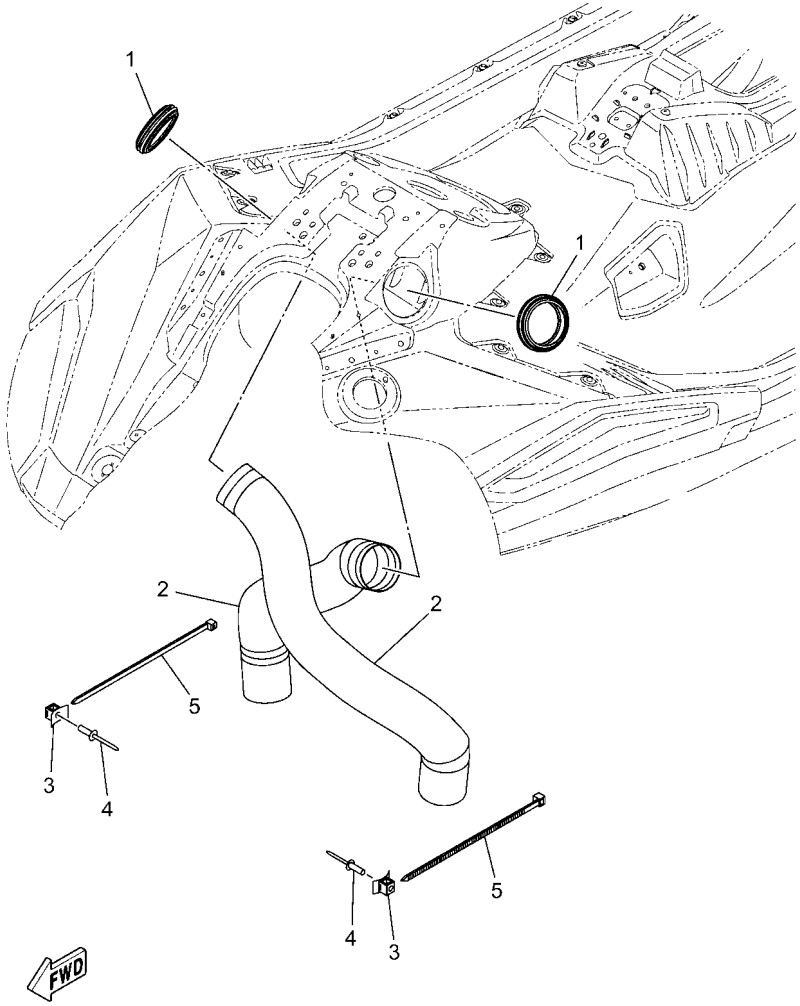

F5P1100-0260

FIG. 26 VENTILATION

REF. NO.	PART NO.	DESCRIPTION	F5S2					REMARKS
1	F3Y–U2127–00	BASE, AIR INTAKE	2					
2	F3Y–U213G–01	HOSE, VENTILATOR 2	2					
3	F1W–U828M–00	BASE, CLAMP	2					
4	90267–48806	RIVET, BLIND	2					
5	90464–99804	CLAMP	2					

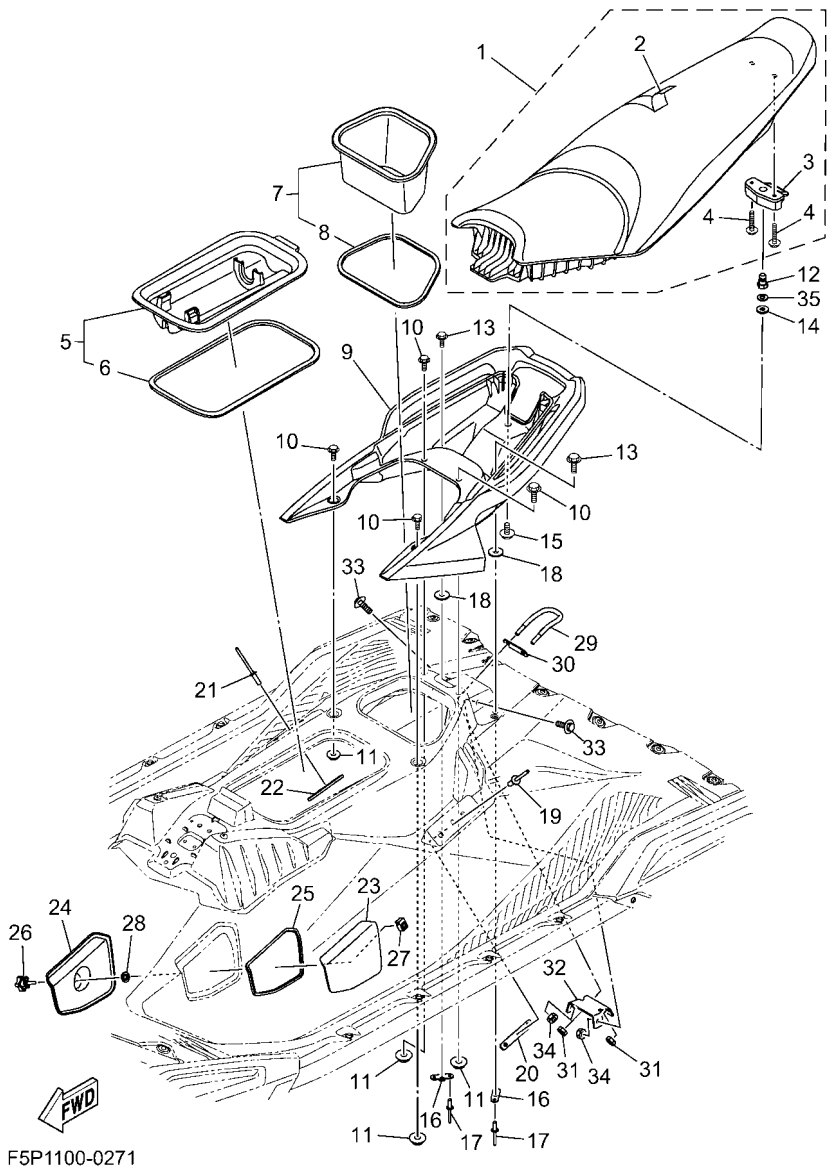

FIG. 27 SEAT & UNDER LOCKER

REF. NO.	PART NO.	DESCRIPTION	F5S2					REMARKS
1	F5P–U370H–60	TRIPLE SEAT ASSY	1					
2	F5P–UFJ53–60	.COVER, SEAT 3	1					
3	F2C–U3850–00	.SEAT LOCK ASSY	1					
4	90119–069UP	.BOLT, WITH WASHER	2					
5	F3Y–U592A–10	CASE ASSY 2	1					
6	F3Y–U266D–10	.PACKING 5	1					
7	F5P–U591A–00	CASE ASSY 1	1					
8	F5P–U266E–00	.PACKING 6	1					
9	F5P–U271B–00	GRIP, HAND	1					
10	90119–08828	BOLT, WITH WASHER	4					
11	F3Y–U142L–00	NUT, LOCK	4					
12	F1K–U3774–00	PIN	1					
13	90119–08822	BOLT, WITH WASHER	2					
14	90201–109U6	WASHER, PLATE	1					
15	90119–10804	BOLT, WITH WASHER	1					
16	F2C–U826C–00	BRACKET	2					
17	F5M–U1454–00	RIVET	4					
18	F5P–U266C–00	PACKING 4	2					
19	F4P–U516R–01	RIVET 1	1					
20	F5P–U0512–00	BRACKET, 2 (FX31)	1					
21	F4P–U516R–01	RIVET 1	1					
22	F5P–U0512–00	BRACKET, 2 (FX31)	1					
23	F5P–U8187–60	COVER 1	1					
24	F5P–U8188–00	COVER	1					
25	F5P–U7824–00	PACKING, SEAL	1					
26	F5P–U6862–00	KNOB	1					
27	F3X–U517E–00	NUT	1					

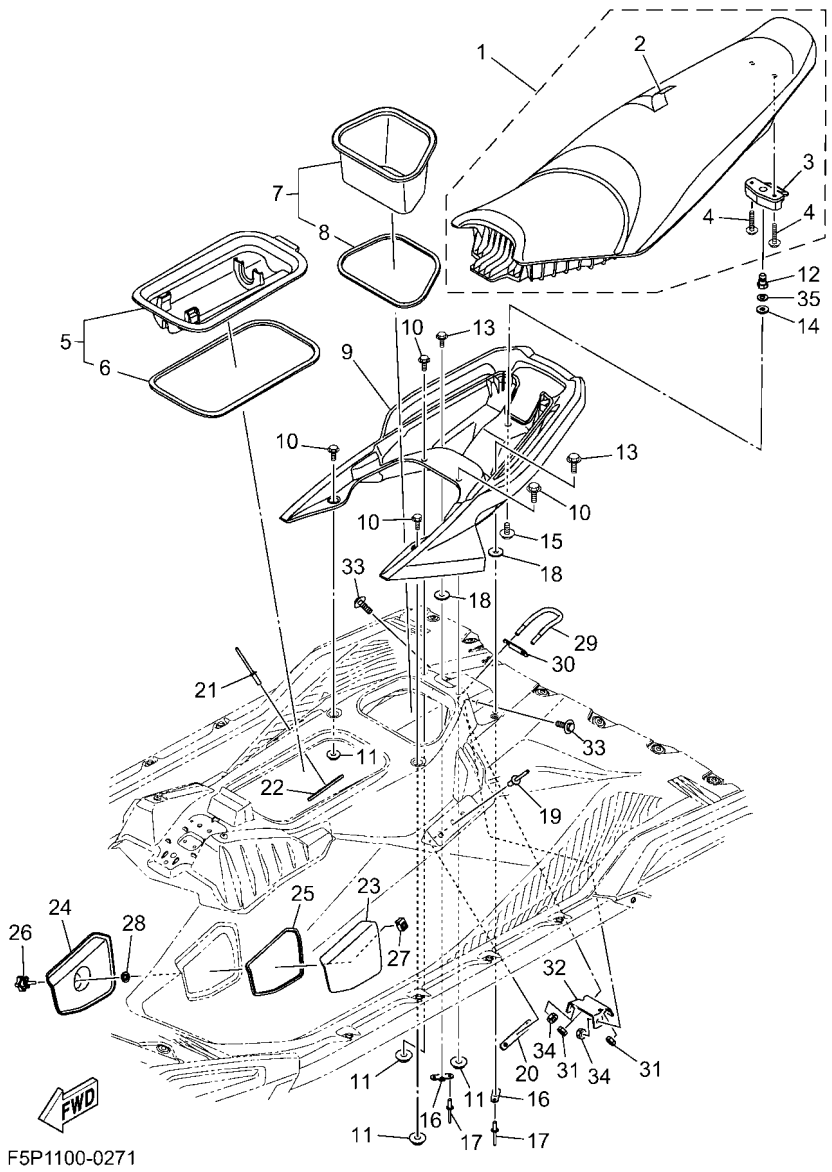

FIG. 27 SEAT & UNDER LOCKER

REF. NO.	PART NO.	DESCRIPTION	F5S2					REMARKS
28	F5P–U1174–00	WASHER	1					
29	F1B–U1629–00	SKI TOWS	1					
30	GP7–U4953–10	PLATE A	1					
31	9572R–08300	NUT, FLANGE	2					
32	F5P–U9310–00	RFM. DECK ASSY 1	1					
33	90119–08870	BOLT, WITH WASHER	2					
34	9572R–08300	NUT, FLANGE	2					
35	9299R–10200	WASHER	1					

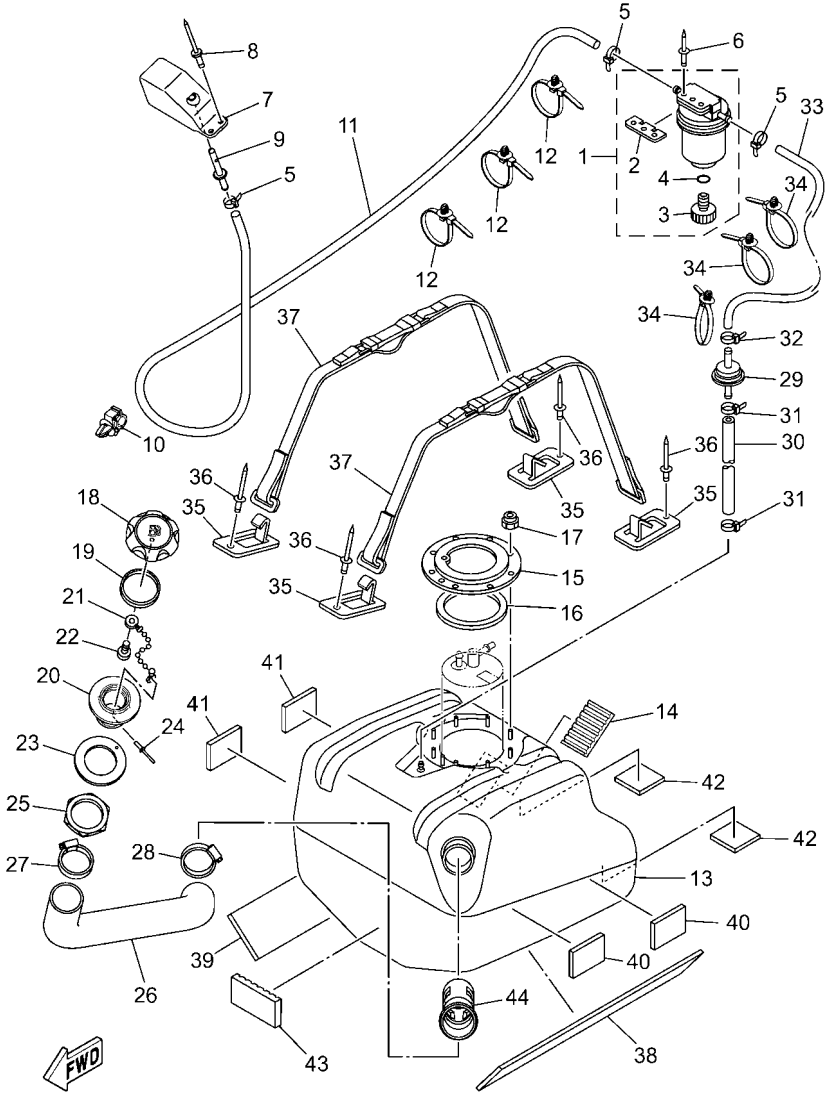

F5P1100-0280

FIG. 28 FUEL TANK

REF. NO.	PART NO.	DESCRIPTION	F5S2					REMARKS
1	F2F–6214A–00	FILTER, VENT ASSY	1					
2	EW2–62142–00	.PLATE, FILTER	1					
3	70R–24543–00	.PLUG, DRAIN	1					
4	70R–24489–00	.O-RING	1					
5	90465–11829	CLAMP	3					
6	90267–489U2	RIVET, BLIND	2					
7	GP7–62159–02	SOCKET, VENTILATION	1					
8	90267–489U6	RIVET, BLIND	2					
9	F1G–62149–00	PIPE, VENTILATION	1					
10	90464–12830	CLAMP	1					d: 12mm
11	F5P–U7856–01	HOSE, AIR VENT 3	1					
12	1NS–F1338–00	CLAMP	3					
13	F3Y–U7711–02	TANK, FUEL	1					
14	F1S–U8221–00	PAD, BATTERY	1					
15	F1B–U7773–00	RING	1					
16	F1B–67747–00	PACKING, SEAL	1					
17	9572R–06300	NUT, NYLON	9					
18	F2N–U7831–10	CAP, FUEL FILLER	1					BLACK
19	GP7–U7832–01	PACKING	1					
20	GP7–U7833–11	SOCKET	1					BLACK
21	GP7–U7835–00	CHAIN BALL	1					
22	90169–049U1	SCREW, TRUSS HEAD TAPPING	1					
23	GP7–U7834–00	PACKING FUEL FILLER	1					
24	90267–329UR	RIVET, BLIND	1					
25	GP7–U783F–00	NUT, FUEL FILLER	1					
26	F5P–U7844–00	HOSE	1					
27	90601–155U4	BAND, HOSE 55	1					

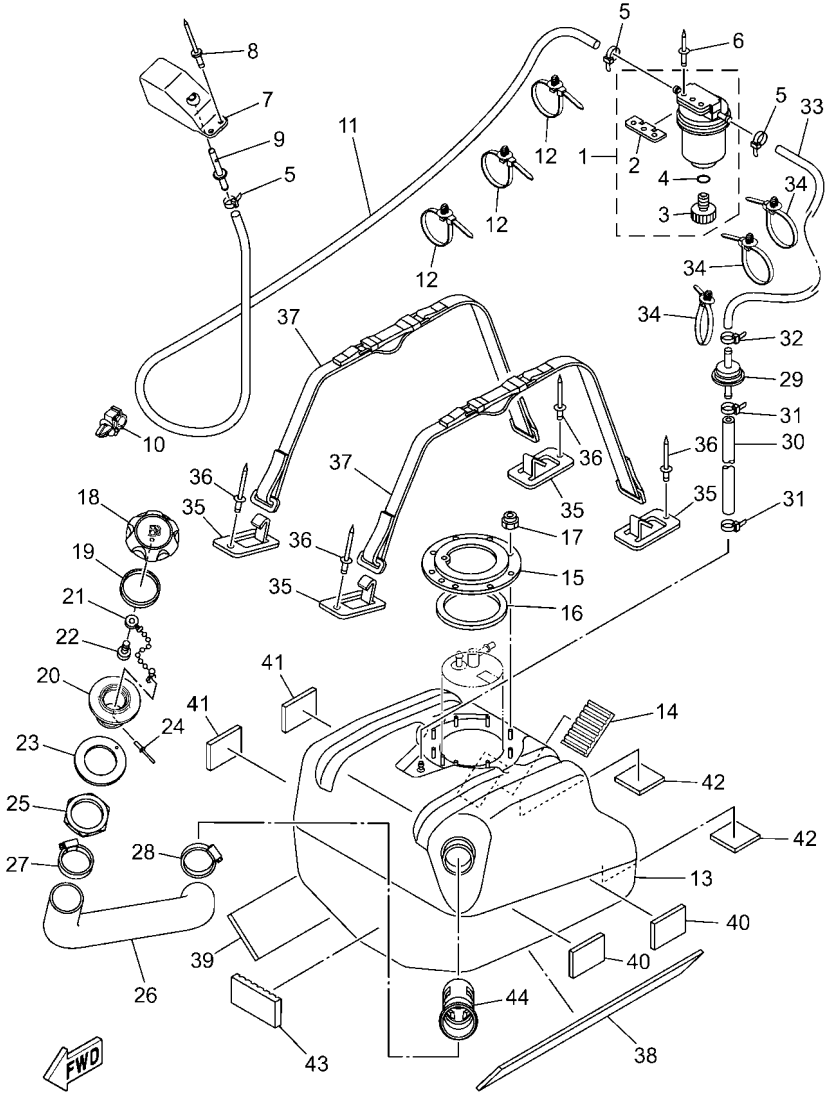

F5P1100-0280

FIG. 28 FUEL TANK

REF. NO.	PART NO.	DESCRIPTION	F5S2					REMARKS
28	90601–155U4	BAND, HOSE 55	1					
29	F3Y–U7767–00	CHECK VALVE	1					
30	GP7–U785H–01	HOSE, AIR VENT 3	1					
31	90465–11829	CLAMP	2					
32	90465–11829	CLAMP	1					
33	F0D–U785G–11	HOSE, AIR VENT	1					
34	1NS–F1338–00	CLAMP	3					
35	F1K–U5772–04	HOOK A	4					
36	90267–489U1	RIVET,BLIND	4					
37	F3Y–67743–01	BELT, TANK 1	2					
38	F2S–U759B–00	MAT 1	1					
39	F2S–U759B–00	MAT 1	1					
40	F1W–U759C–01	MAT 2	2					
41	F1W–U759C–01	MAT 2	2					
42	F1K–U759C–00	MAT 2	2					
43	F1S–U8221–00	PAD, BATTERY	1					
44	F4L–U773D–00	TUBE	1					

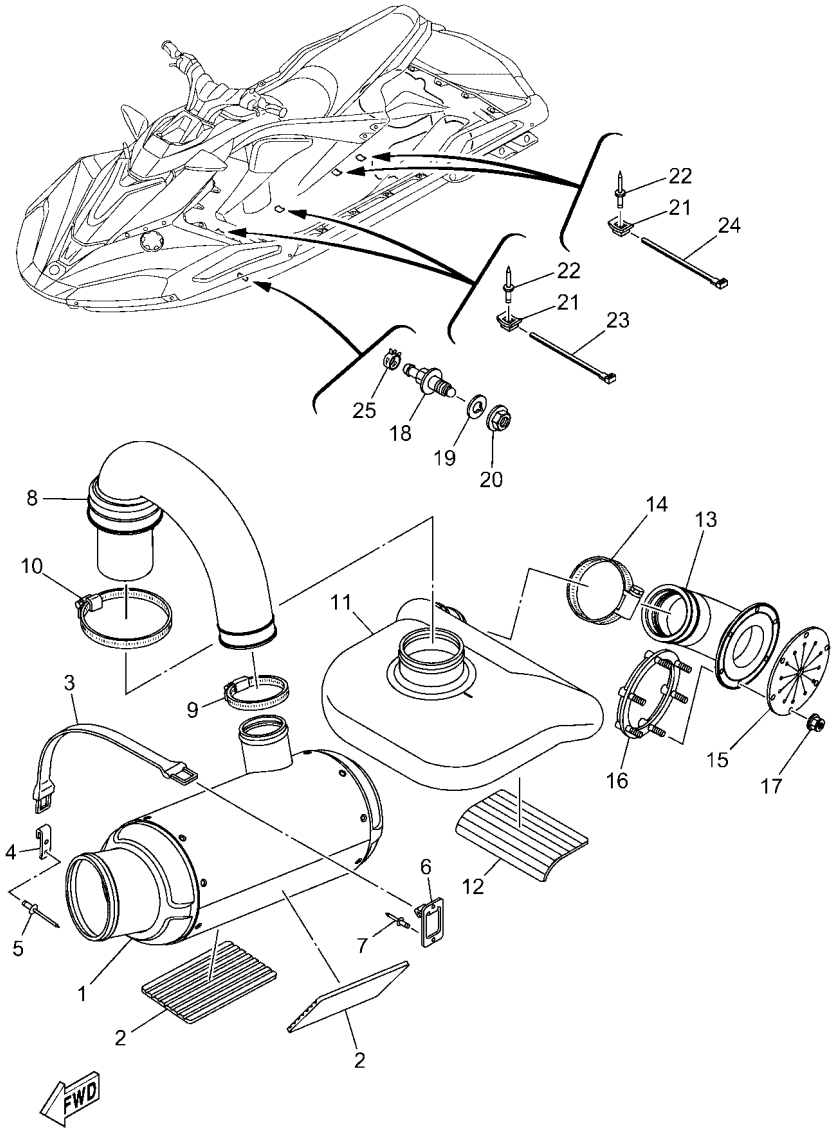

F5S1100-0291

FIG. 29 EXHAUST 3

REF. NO.	PART NO.	DESCRIPTION	F5S2					REMARKS
1	F3Y–U7550–01	WATER LOCK COMP.	1					
2	F1S–U8221–00	PAD, BATTERY	2					
3	EU0–U821D–00	BAND,BATTERY 1	1					
4	GA7–65772–00	HOOK A	1					
5	90267–489U1	RIVET,BLIND	2					
6	F1K–U5772–04	HOOK A	1					
7	90267–489U1	RIVET,BLIND	1					
8	F5P–U7555–00	HOSE, EXHAUST	1					
9	90601–179U8	BAND, HOSE 79	1					
10	90450–99804	HOSE CLAMP ASSY	1					
11	F3Y–U4261–00	TANK, WATER	1					
12	F1S–U8221–00	PAD, BATTERY	1					
13	F3Y–U758D–00	HOSE,EXHAUST 3	1					
14	90601–179U8	BAND, HOSE 79	1					
15	F1B–U751G–10	VALVE, EXHAUST	1					
16	F1S–U757B–01	PLATE	1					
17	F2N–U142L–00	NUT, LOCK	6					
18	F2C–U753B–01	PILOT, WATER	1					
19	F2C–U7564–02	GASKET	1					
20	F2C–U2733–00	NUT	1					
21	F1W–U828M–00	BASE, CLAMP	4					
22	90267–48806	RIVET, BLIND	4					
23	90464–32801	CLAMP	2					
24	90601–200U2	BAND	2					
25	90467–150A5	CLIP	1					

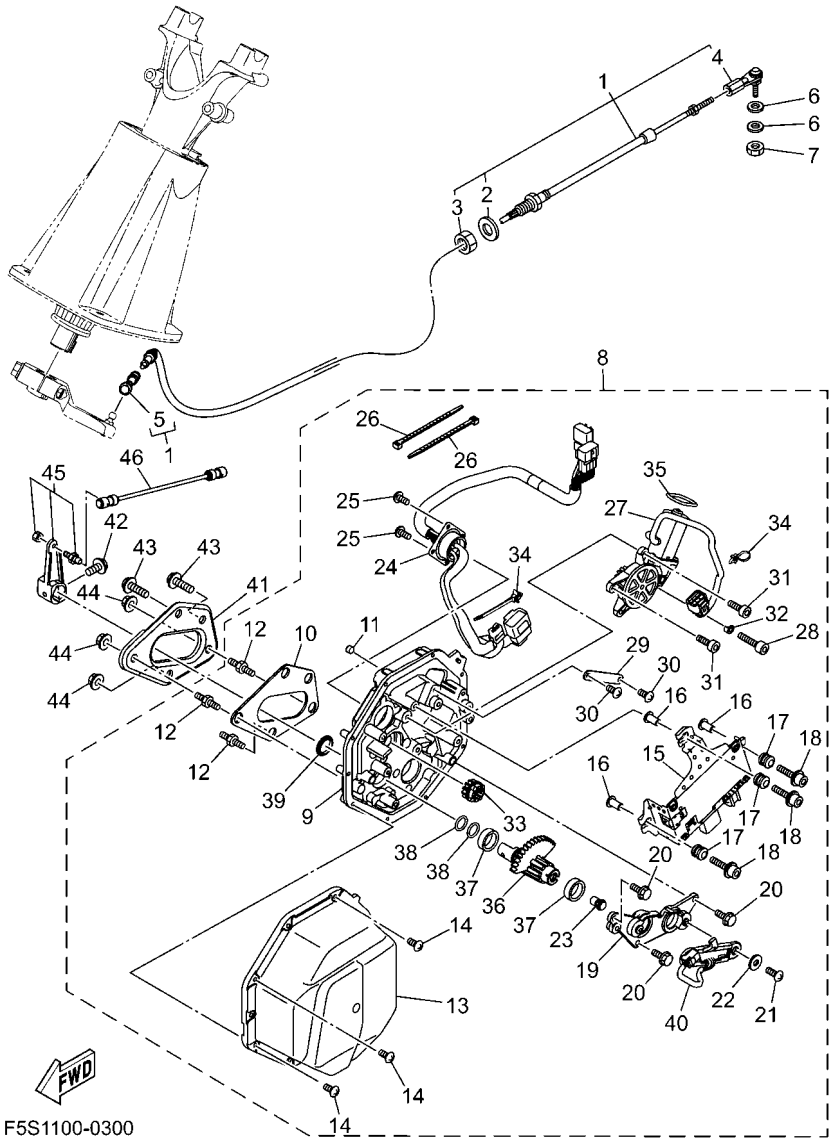

F5S1100-0300

FIG. 30 CONTROL CABLE

REF. NO.	PART NO.	DESCRIPTION	F5S2					REMARKS
1	F4L–61481–02	CABLE, STEERING	1					
2	F1B–61438–00	.PACKING C	1					
3	F1B–6151S–01	.NUT	1					
4	F1B–61461–02	.STUD, JOINT BALL	1					
5	F2N–61460–00	.BALL JOINT ASSY	1					
6	90201–06906	WASHER, PLATE	2					
7	9538R–06700	NUT	1					
8	F5S–6140B–00	MOTOR ASSY	1					
9	F4S–6152K–00	.HOUSING	1					
10	F4P–63262–00	.SEAL	1					
11	F3J–613D0–00	.PLUG	1					
12	F3J–67369–00	.BOLT, STUD	3					
13	F3Y–6143J–00	.COVER	1					
14	F3Y–68198–00	.SCREW	10					
15	F5S–68197–00	.CONTROL UNIT	1					
16	90387–06119	.COLLAR	3					
17	6A0–82317–01	.DAMPER, IGNITION COIL	3					
18	F3J–613B4–20	.BOLT	3					
19	F3Y–61256–00	.PLATE	1					
20	F3Y–613B3–00	.BOLT, HEXAGON	3					
21	F3J–68198–20	.SCREW	2					
22	F3J–613C3–10	.WASHER, PLAIN	1					
23	F3J–60428–00	.MAGNET, SENSOR	1					
24	F5S–68270–00	.WIRE HARNESS ASSY.	1					
25	F3J–68198–00	.SCREW	4					
26	F3J–68273–00	.CLAMP	2					
27	F4S–68352–00	.MOTOR	1					

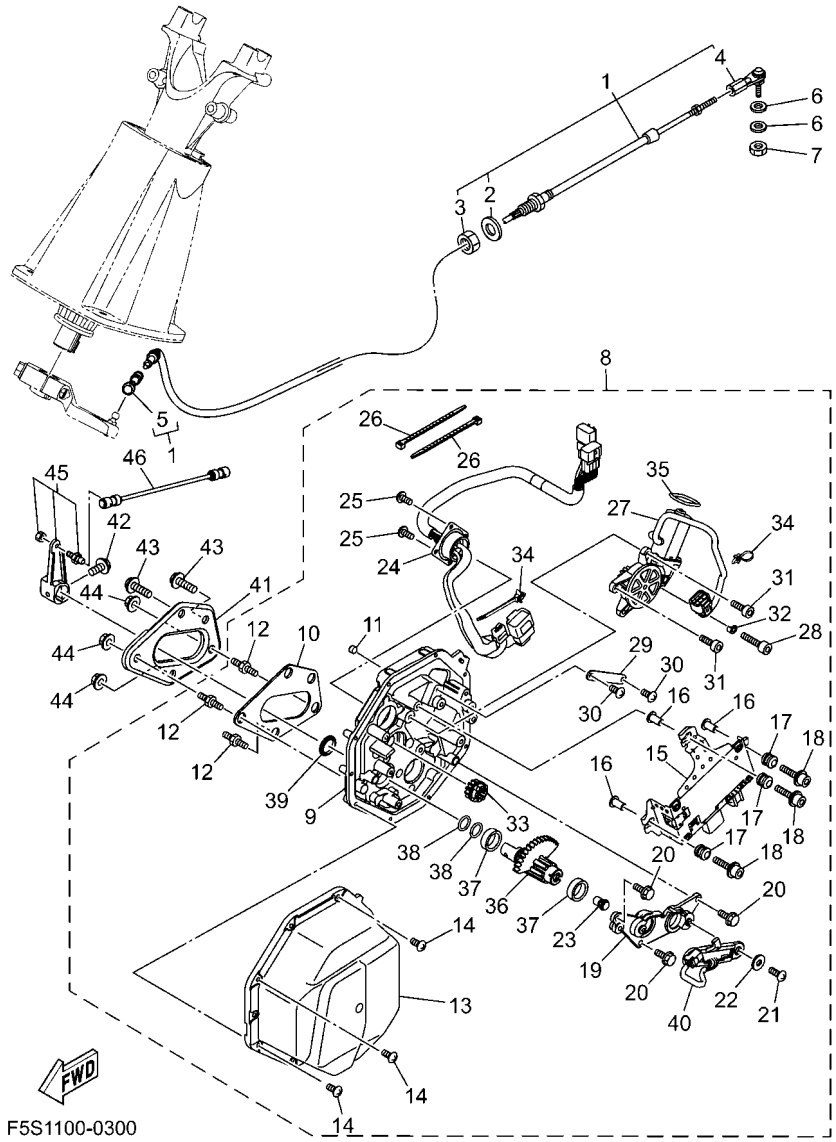

F5S1100-0300

FIG. 30 CONTROL CABLE

REF. NO.	PART NO.	DESCRIPTION	F5S2					REMARKS
28	F3J–613B4–00	.BOLT	1					
29	F3Y–61348–00	.PLATE	1					
30	F3J–68198–20	.SCREW	2					
31	F3J–613B4–10	.BOLT	2					
32	F3J–61492–00	.SPACER	1					
33	F4P–60211–00	.GEAR 1	1					
34	F4P–68273–00	.CLAMP	2					
35	F4P–613A5–10	.O-RING	1					
36	F3Y–60221–10	.SHAFT, 1	1					
37	F3Y–61344–00	.BUSH	2					
38	F4P–613A5–00	.O-RING	2					
39	F4P–61344–00	.BUSH	1					
40	F4S–85887–00	.SENSOR, ANGLE	1					
41	F4P–U8285–00	PLATE	1					
42	90119–06893	BOLT, WITH WASHER	1					
43	90119–08851	BOLT, WITH WASHER	2					
44	F3Y–U142L–00	NUT, LOCK	3					
45	F3Y–6150F–00	SHIFT ARM ASSY	1					
46	F3J–6150D–00	ROD ASSY 2	1					

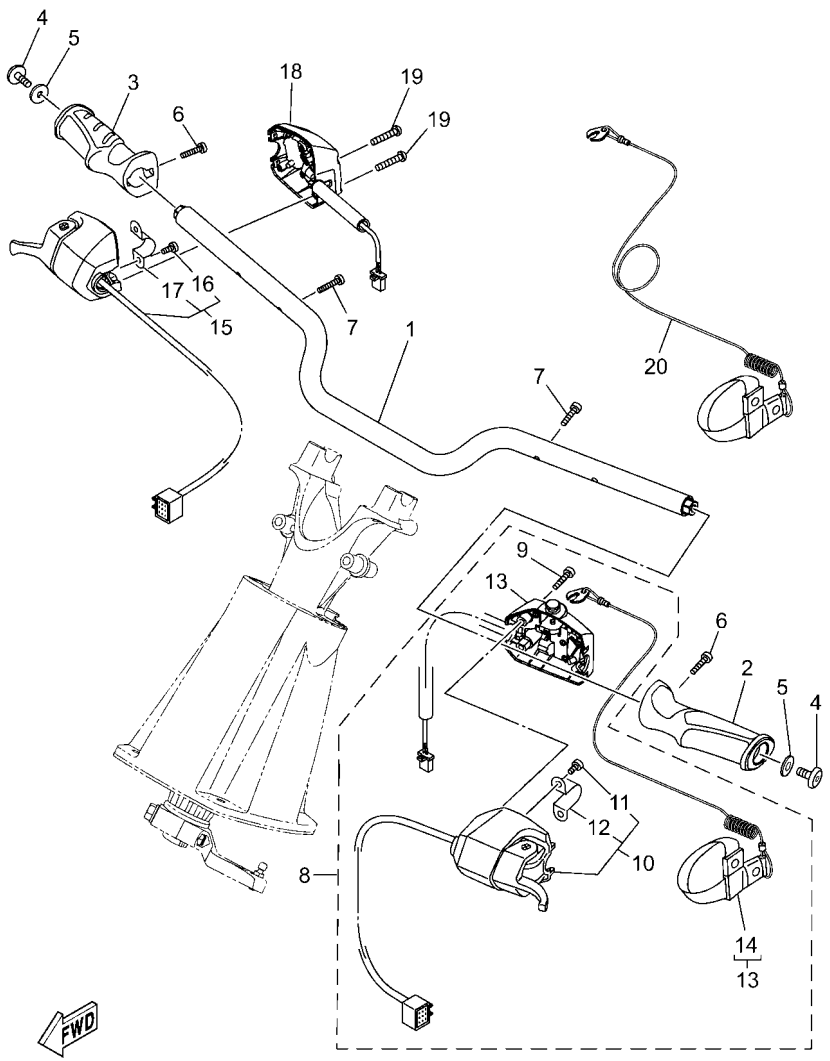

F5S1100-0310

FIG. 31 STEERING 1

REF. NO.	PART NO.	DESCRIPTION	F5S2					REMARKS
1	F5P–U1552–00	HANDLE	1					
2	F4P–U155C–00	GRIP,HANDLE	1					
3	F4P–U155D–00	GRIP, HANDLE	1					
4	90110–06382	BOLT, HEXAGON SOCKET HEAD	2					
5	90201–068G0	WASHER, PLATE	2					
6	F2S–U1516–00	BOLT	2					
7	91380–04030	BOLT	2					
8	F4P–68310–24	SWITCH BOX ASSY	1					
9	6CS–6725F–00	.BOLT, THROTTLE	2					
10	F4P–26411–12	.SHIFT LEVER ASSY	1					
11	F4P–6725F–00	..BOLT, THROTTLE	2					
12	F4P–61368–00	..SUPPORT	1					
13	F4P–8259E–32	.SWITCH ASSY	1					
14	EW2–68348–00	..LANYARD, STOP SWITCH	1					
15	F4P–14305–12	THROTTLE LEVER COMP	1					
16	F4P–6725F–00	.BOLT, THROTTLE	2					
17	F4P–61368–00	.SUPPORT	1					
18	F4P–81860–12	SWITCH ASSY	1					
19	6CS–6725F–00	BOLT, THROTTLE	2					
20	EW2–68348–00	LANYARD, STOP SWITCH	1					

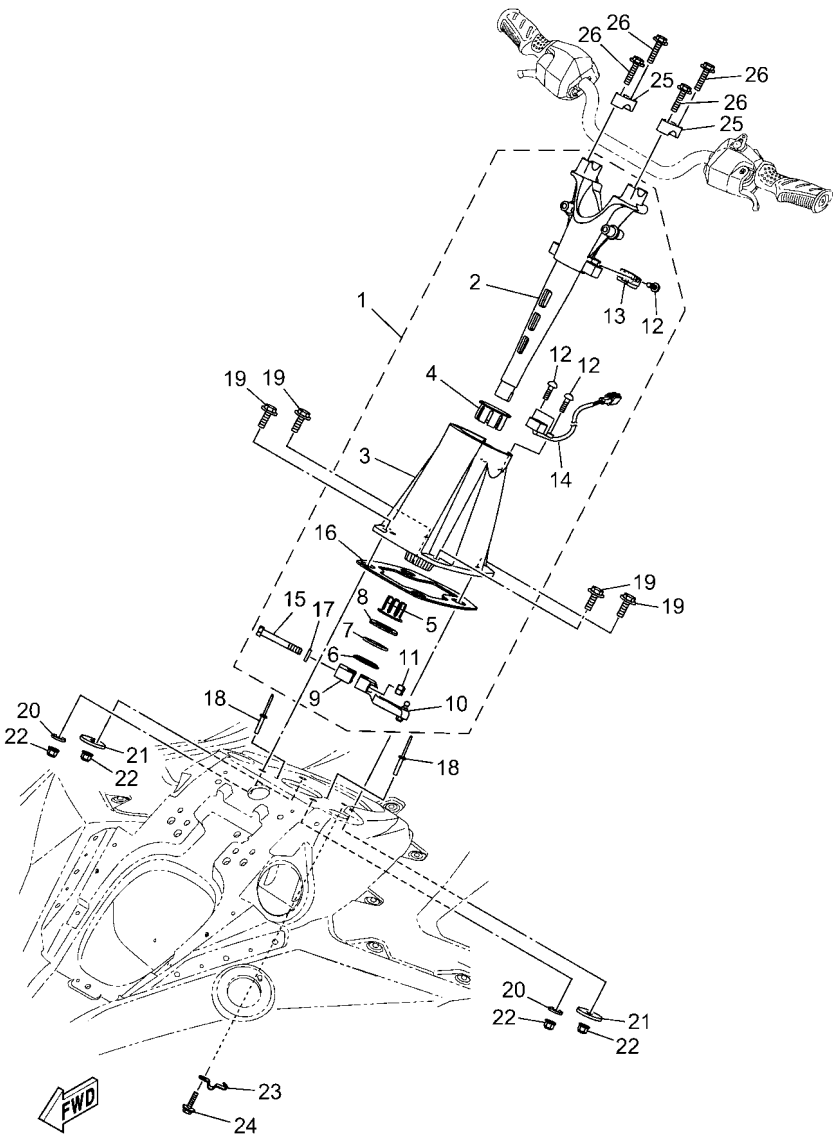

F5P1100-0320

FIG. 32 STEERING 2

REF. NO.	PART NO.	DESCRIPTION	F5S2					REMARKS
1	F5P–61400–00	STEERING MASTER ASSY	1					
2	F5P–6152D–00	.SHAFT	1					
3	F5M–6152M–00	.HOUSING ASSY	1					
4	F5M–6134M–00	.BUSH	1					
5	F5M–6134M–10	.BUSH	1					
6	F5M–61554–00	.PLATE, RETAINING	1					
7	F5M–613C5–00	.O-RING	1					
8	F5M–6155G–00	.PLATE, COVER	1					
9	F5M–61339–00	.HOLDER, STOPPER	1					
10	F5P–6153R–00	.ARM ASSY.	1					
11	95720–08300	.NUT, SELF-LOCKING	2					
12	F2X–613C1–00	.SCREW	3					
13	F2X–6838C–01	.MAGNET	1					
14	F2X–6838B–02	.SENSOR, MAGNET	1					
15	F1K–61355–00	.BOLT	2					
16	F5M–6143C–00	.SEAL, RUBBER	1					
17	F5M–6153P–00	.WASHER	2					
18	90267–489U8	RIVET, BLIND	2					
19	F3P–U1369–09	BOLT	4					
20	90201–109U6	WASHER, PLATE	2					
21	F1W–U725E–00	WASHER	2					
22	F3Y–U142L–00	NUT, LOCK	4					
23	F1K–U1468–03	STOPPER, CABLE	1					
24	90119–06880	BOLT, WITH WASHER	1					
25	EU0–23814–32	HOLDER, HANDLE UPPER	2					
26	90119–08827	BOLT, WITH WASHER	4					

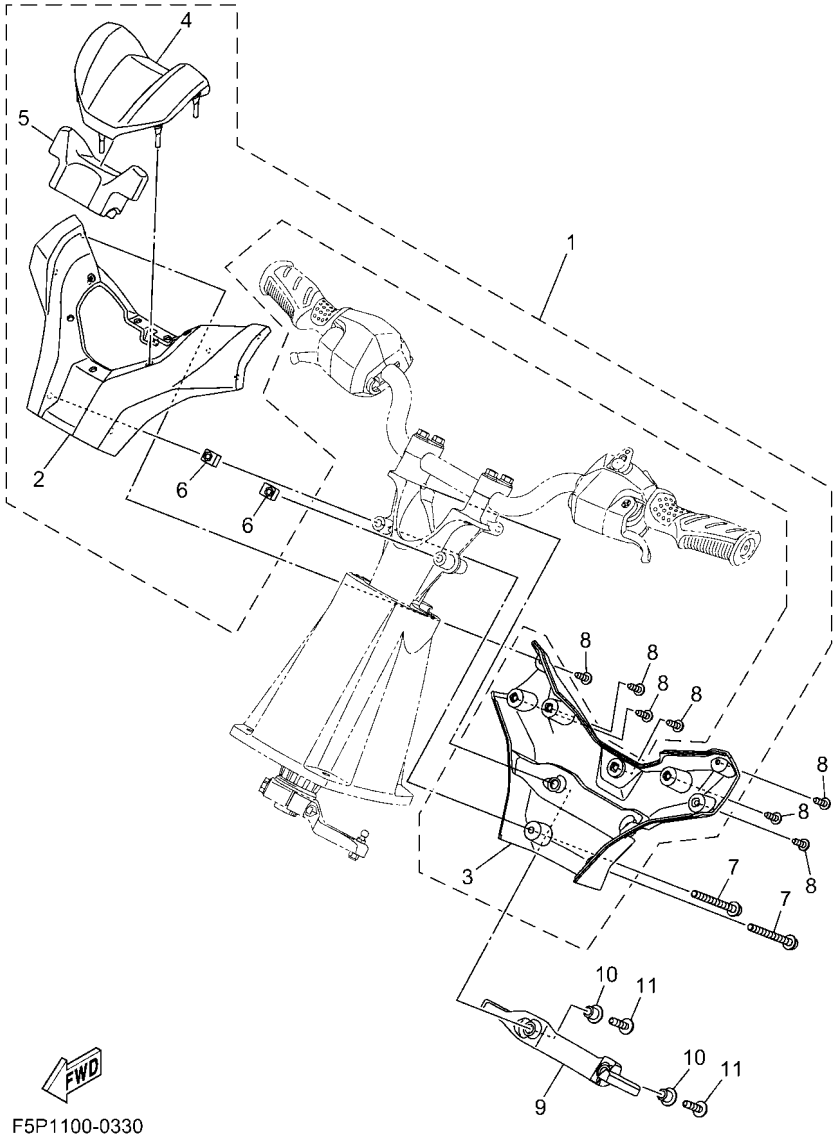

FIG. 33 STEERING 3

REF. NO.	PART NO.	DESCRIPTION	F5S2					REMARKS
1	F5P–U142A–00	STEERING PAD COMP	1					
2	F5P–U143D–00	.PAD, STEERING 1	1					
3	F5P–U143E–00	.PAD, STEERING 2	1					
4	F5P–U142D–00	.COVER, PAD	1					
5	F5P–U156E–00	.PAD 1	1					
6	F3X–U517E–00	.NUT	2					
7	F3Y–U1355–19	BOLT	2					
8	F2S–U13C1–00	SCREW	7					
9	F5P–UFTAA–00	HOOK,MOORING 1	1					
10	F5G–U151R–00	COLLAR	2					
11	F5G–U7823–00	SCREW	2					

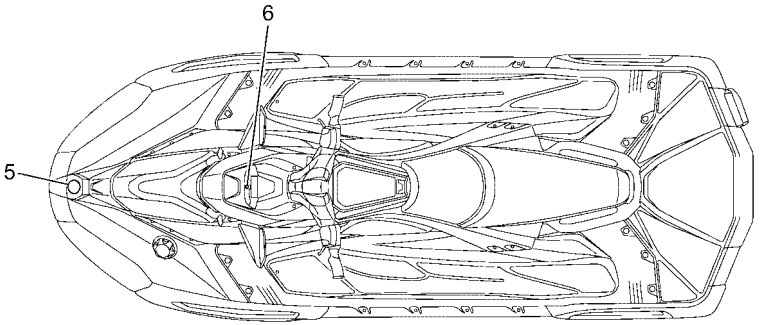

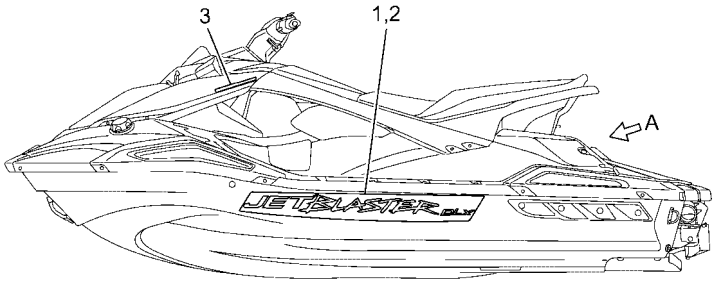

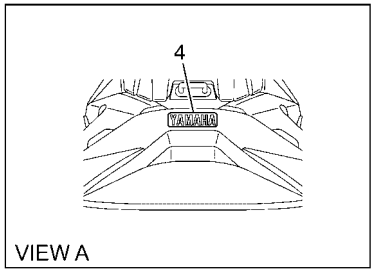

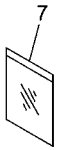

F5S1100-0340

FIG. 34 GRAPHICS

REF. NO.	PART NO.	DESCRIPTION	F5S2					REMARKS
1	F5S–U417B–10	GRAPHIC 1 (LH)	1					
2	F5S–U417C–10	GRAPHIC 2 (RH)	1					
3	F5S–U417M–10	GRAPHIC C	2					
4	F5P–U4114–00	MARK, YAMAHA A	1					
5	F3Y–U411H–02	EMBLEM, TUNING FORK	1					
6	F5P–U411H–00	EMBLEM, TUNING FORK	1					
7	F3Y–U5901–00	BAG, VINYL	1					

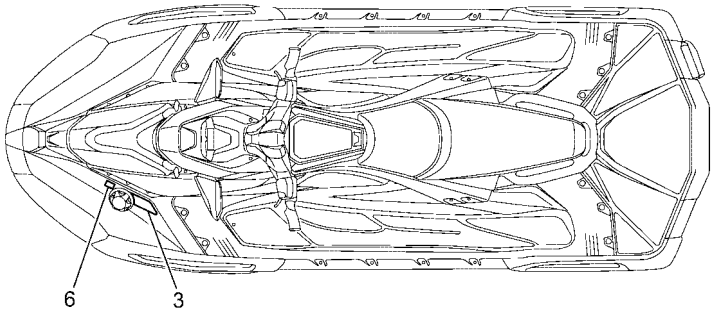

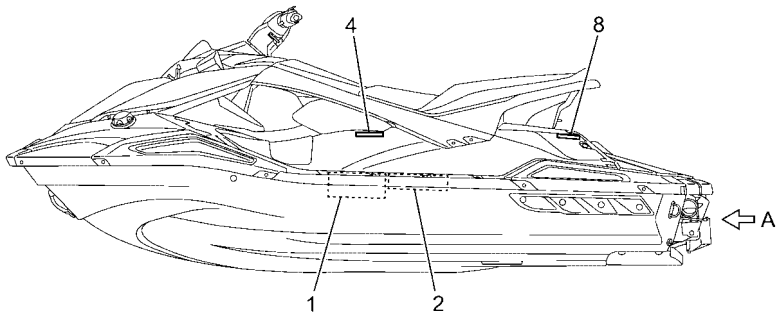

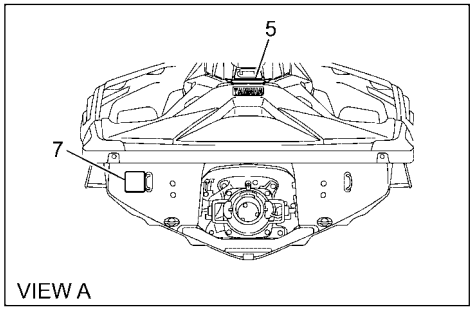

F5S1100-0350

FIG. 35 IMPORTANT LABELS

REF. NO.	PART NO.	DESCRIPTION	F5S2					REMARKS
1	F5M–U41B1–00	LABEL, WARNING UNIFORM 1	1					
2	F5M–U41B1–20	LABEL, WARNING UNIFORM 1	1					
3	F5P–U415B–20	LABEL, WARNING(FUEL)	1					
4	F5P–U41F5–20	LABEL, FIRE EXTINGUISHER 1	1					
5	F5P–U416A–20	WARNING LABEL ASSY	1					
6	B4F–F817K–00	LABEL, FUEL	1					FOR EUR
7	F7M–U418F–10	LABEL, RIGHTING	1					
8	F5P–U419E–00	LABEL 4	1					FOR CAN

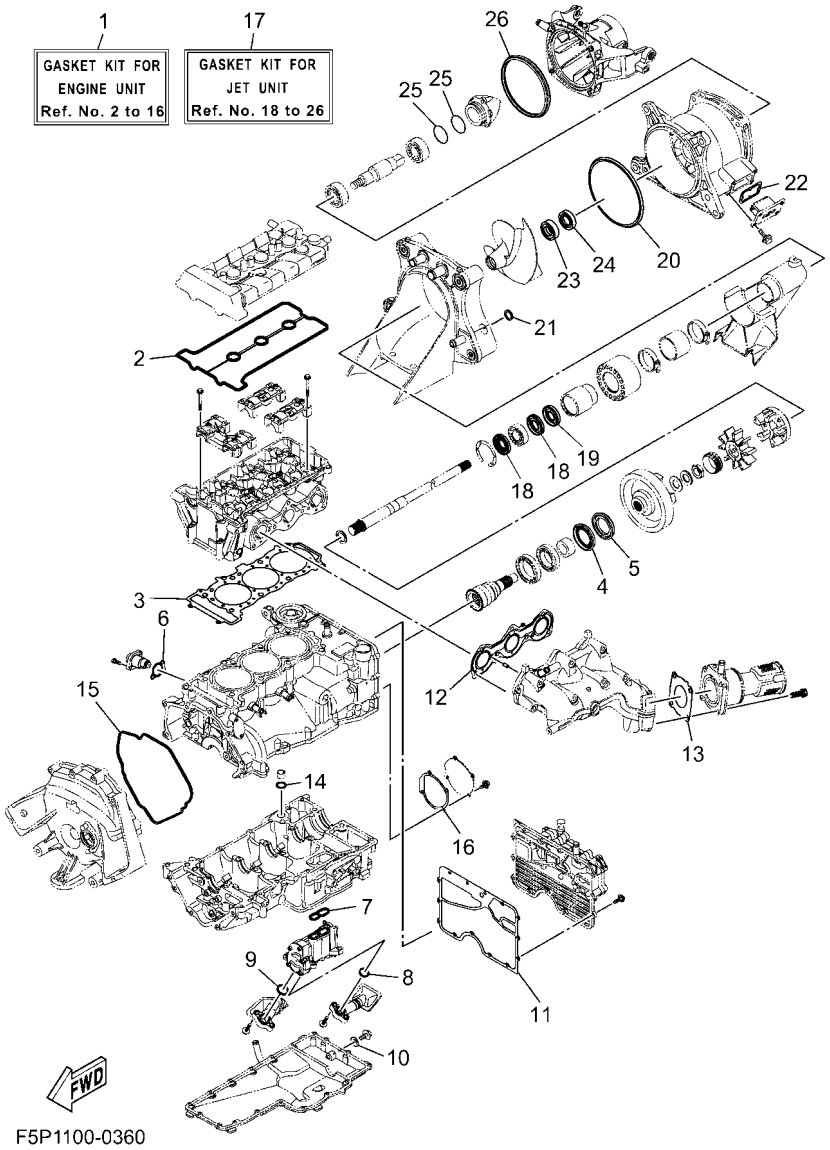

FIG. 36 REPAIR KIT 1

REF. NO.	PART NO.	DESCRIPTION	F5S2					REMARKS
1	6GA–W0001–02	GASKET KIT FOR ENGINE UNIT	1					
2	6EY–11193–00	.GASKET, HEAD COVER 1	1					
3	6EY–11181–01	.GASKET, CYLINDER HEAD 1	1					
4	93101–40001	.OIL SEAL	1					
5	93101–40002	.OIL SEAL	1					
6	2C0–12213–00	.GASKET, TENSIONER CASE	1					
7	6EY–13563–00	.GASKET	1					
8	6EY–13477–00	.GASKET	1					
9	6EY–13476–00	.GASKET	1					
10	90430–08209	.GASKET	1					
11	6EY–15453–01	.GASKET	1					
12	6GA–14613–00	.GASKET, EXHAUST PIPE	1					
13	6GA–14739–00	.GASKET, MUFFLER DAMPER 1	1					
14	93210–17010	.O-RING	1					
15	6EY–15461–00	.GASKET, CRANKCASE COVER 2	1					
16	6EY–15463–01	.GASKET, 2	1					
17	6MP–W0001–20	GASKET KIT FOR JET UNIT	1					
18	93101–25M55	.OIL SEAL	2					
19	93101–24001	.OIL SEAL	1					
20	6MP–G6883–00	.PACKING	1					
21	6MP–G5874–00	.RING, SEAL	1					
22	6GA–G2414–00	.O-RING	1					
23	93102–25M34	.OIL SEAL	1					
24	93101–25M50	.OIL SEAL	1					
25	93210–44003	.O-RING	2					
26	93211–49800	.O-RING	1					

PART NO.	REF. NO.
6EY–11102–00	1 – 2
6EY–11110–00	1 – 1
6EY–11119–00	1 – 20
6EY–1111E–10	1 – 18
5VY–1111G–00	1 – 15
6EY–11125–00	8 – 25
6EY–11126–10	8 – 27
2C0–11133–11	1 – 3
8HF–11134–10	1 – 4
6EY–11164–00	8 – 20
6EY–11166–10	8 – 16
6EY–11181–01	1 – 16
	36 – 3
6EY–11191–10	1 – 9
6EY–11193–00	1 – 11
	36 – 2
69J–11301–11	2 – 22
68V–11325–02	2 – 23
67F–11328–01	2 – 24
6EY–11400–00	3 – 1
6EY–11406–10	3 – 14
2HC–11407–00	3 – 25
3LD–11416–10	3 – 6
3LD–11416–20	3 – 6
3LD–11416–30	3 – 6
3LD–11416–40	3 – 6
3LD–11416–50	3 – 6
3LD–11416–60	3 – 6
3LD–11416–70	3 – 6
8ES–11428–01	2 – 8
8ES–11454–00	3 – 27
2HC–11464–00	3 – 30
6EY–11478–00	3 – 29
6EY–11531–00	3 – 26
6JF–11571–00	3 – 20
8KH–11603–02	3 – 8
8KH–11631–00	3 – 7
6EY–11633–00	3 – 9
B0F–11650–00	3 – 2
5JW–11654–00	3 – 3
5JW–11656–00	3 – 5
5JW–11656–10	3 – 5
5JW–11656–20	3 – 5
5JW–11656–30	3 – 5
5JW–11656–40	3 – 5
5JW–11656–50	3 – 5
6EY–11917–10	3 – 17
8GL–12111–10	4 – 5

PART NO.	REF. NO.
8GL–12113–00	4 – 8
1RC–12116–00	4 – 7
3D7–12117–00	4 – 9
1WG–12118–00	4 – 10
2HC–12119–00	4 – 11
8GL–12121–10	4 – 6
6EY–12153–01	4 – 13
1HX–12168–00	4 – 12
1HX–12168–20	4 – 12
1HX–12168–40	4 – 12
1HX–12168–60	4 – 12
1HX–12168–80	4 – 12
1HX–12168–A0	4 – 12
1HX–12168–F0	4 – 12
1HX–12168–H1	4 – 12
1HX–12168–K1	4 – 12
1HX–12168–M1	4 – 12
1HX–12168–R1	4 – 12
1HX–12168–U1	4 – 12
1HX–12168–W1	4 – 12
1HX–12168–Y1	4 – 12
1HX–12169–11	4 – 12
1HX–12169–31	4 – 12
1HX–12169–50	4 – 12
1HX–12169–70	4 – 12
1HX–12169–90	4 – 12
1HX–12169–E0	4 – 12
1HX–12169–G0	4 – 12
1HX–12169–J0	4 – 12
1HX–12169–L0	4 – 12
1HX–12169–N0	4 – 12
1HX–12169–T0	4 – 12
6EY–12170–00	4 – 1
2HC–12176–00	4 – 3
6EY–12180–00	4 – 2
8KH–12210–00	4 – 15
2C0–12213–00	4 – 16
	36 – 6
5BE–12241–01	1 – 10
6EY–12251–00	4 – 18
2HC–12252–00	4 – 19
6EY–12279–00	4 – 21
6D3–12411–00	10 – 27
6EY–12413–00	10 – 28
6EY–12577–00	10 – 21
6S5–12579–00	10 – 23
6EY–12580–00	10 – 3
6EY–12584–00	10 – 8

PART NO.	REF. NO.
6EY–12880–01	5 – 8
8ES–13284–00	2 – 17
6EY–13300–00	7 – 1
6EY–13355–00	7 – 2
6EY–13405–00	7 – 5
6EY–13406–00	7 – 8
6EY–13417–11	7 – 18
5GH–13440–90	7 – 17
6EY–13455–00	7 – 20
6EY–13470–03	8 – 2
6EY–13476–00	7 – 9
	36 – 9
6EY–13477–00	7 – 6
	36 – 8
6EY–13532–00	5 – 13
6EY–13556–10	8 – 3
8FP–13556–10	5 – 11
6EY–13557–10	8 – 5
6EY–13563–00	7 – 4
	36 – 7
6EY–13641–03	5 – 2
6EY–13750–01	5 – 1
2HC–13761–00	5 – 5
6S5–13907–05	18 – 1
6EY–14126–00	5 – 4
6EY–14156–00	5 – 3
68V–1416A–00	5 – 6
F4P–14305–12	31 – 15
6EY–14410–10	6 – 7
6EY–14419–00	6 – 12
6EY–14436–00	6 – 11
6BH–14445–00	5 – 12
6EY–14451–00	6 – 8
6EY–14452–00	6 – 10
6EY–14462–00	6 – 9
6EY–14470–01	6 – 16
6EY–14485–00	6 – 13
6GA–14613–00	9 – 1
	36 – 12
6JF–1469W–00	9 – 8
6GA–14711–00	9 – 2
6GA–14739–00	9 – 6
	36 – 13
6GA–14752–00	9 – 13
6JF–14784–00	9 – 7
6EY–15109–08	2 – 2
6EY–15362–10	8 – 14
3Y1–15363–10	1 – 12

PART NO.	REF. NO.
4JT–15381–01	2 – 6
6EY–15421–00	2 – 18
6EY–15453–01	8 – 1
	36 – 11
6EY–15461–00	2 – 19
	36 – 15
6EY–15463–01	2 – 29
	36 – 16
6EY–15486–00	7 – 14
2HC–15512–00	14 – 2
8FA–15515–00	14 – 1
8ES–15521–00	14 – 3
6EY–15589–01	2 – 28
6EY–15590–00	14 – 4
EU0–23814–32	32 – 25
70R–24489–00	28 – 4
6GY–2450B–00	5 – 16
70R–24543–00	28 – 3
6EY–24864–00	10 – 19
F4P–26411–12	31 – 10
6EX–2812A–00	16 – 26
6EY–41661–10	19 – 4
6EY–41662–00	19 – 5
6GA–44517–00	19 – 1
6EY–44574–00	19 – 2
6EY–45155–00	3 – 24
6EY–4581J–00	3 – 34
68N–5112T–00	23 – 9
6DU–51319–00	11 – 17
F4P–60211–00	30 – 33
F3Y–60221–10	30 – 36
F3J–60428–00	30 – 23
F3Y–61256–00	30 – 19
F5M–61339–00	32 – 9
F3Y–61344–00	30 – 37
F4P–61344–00	30 – 39
F3Y–61348–00	30 – 29
F5M–6134M–00	32 – 4
F5M–6134M–10	32 – 5
F1K–61355–00	32 – 15
F4P–61368–00	31 – 12
	31 – 17
F4P–613A5–00	30 – 38
F4P–613A5–10	30 – 35
F3Y–613B3–00	30 – 20
F3J–613B4–00	30 – 28
F3J–613B4–10	30 – 31
F3J–613B4–20	30 – 18

PART NO.	REF. NO.
F2X–613C1–00	32 – 12
F3J–613C3–10	30 – 22
F5M–613C5–00	32 – 7
F3J–613D0–00	30 – 11
F5P–61400–00	32 – 1
F5S–6140B–00	30 – 8
F1B–61438–00	30 – 2
F5M–6143C–00	32 – 16
F3Y–6143J–00	30 – 13
F2N–61460–00	30 – 5
F1B–61461–02	30 – 4
F4L–61481–02	30 – 1
F3J–61492–00	30 – 32
F3J–6150D–00	30 – 46
F3Y–6150F–00	30 – 45
F1B–6151S–01	30 – 3
F5P–6152D–00	32 – 2
F4S–6152K–00	30 – 9
F5M–6152M–00	32 – 3
F5M–6153P–00	32 – 17
F5P–6153R–00	32 – 10
F5M–61554–00	32 – 6
F5M–6155G–00	32 – 8
F1K–61624–00	23 – 18
F0X–61637–00	23 – 21
EU0–61652–00	10 – 7
F0X–61652–01	23 – 22
EW2–62142–00	28 – 2
F1G–62149–00	28 – 9
F2F–6214A–00	28 – 1
GP7–62159–02	28 – 7
F4P–63262–00	30 – 10
GA7–65772–00	29 – 4
6CS–6725F–00	31 – 9
	31 – 19
F4P–6725F–00	31 – 11
	31 – 16
F3J–67369–00	30 – 12
F3Y–67743–01	28 – 37
F1B–67747–00	28 – 16
F5S–68197–00	30 – 15
F3J–68198–00	30 – 25
F3Y–68198–00	30 – 14
F3J–68198–20	30 – 21
	30 – 30
GU2–6822E–01	18 – 19
F5S–68270–00	30 – 24
F3J–68273–00	30 – 26

PART NO.	REF. NO.
F4P–68273–00	30 – 34
6S5–682E0–10	18 – 2
F4P–68310–24	31 – 8
F1S–68341–00	18 – 39
EW2–68348–00	31 – 14
	31 – 20
F4S–68352–00	30 – 27
F2X–6838B–02	32 – 14
F2X–6838C–01	32 – 13
4D9–81168–00	17 – 12
60E–81315–01	17 – 2
60E–81328–00	14 – 10
6S5–81364–11	8 – 9
6EY–81410–02	14 – 8
6EY–81450–01	14 – 7
6EY–81800–00	15 – 1
6EY–81826–00	15 – 6
6EY–81840–00	15 – 4
11H–81844–00	15 – 2
1FK–81847–00	15 – 3
3TB–81847–00	15 – 5
	15 – 7
F4P–81860–12	31 – 18
6EY–81940–09	16 – 13
6EY–81953–00	16 – 15
6EX–8195A–00	16 – 25
6D3–81960–01	16 – 10
6EY–81975–00	16 – 6
6GA–82115–01	16 – 16
6GA–82116–00	18 – 40
6EY–82117–00	16 – 17
67F–82151–00	16 – 22
6EX–82151–00	16 – 24
67F–82151–10	16 – 23
67F–82151–30	16 – 20
67F–82151–40	16 – 21
6EX–82170–02	16 – 19
6EX–82310–02	16 – 4
6A0–82317–01	16 – 8
	16 – 27
	30 – 17
6EY–82355–00	16 – 14
5S7–82380–00	5 – 7
68V–82504–00	17 – 1
60E–82556–10	18 – 3
6CR–82560–00	17 – 9
6ET–82576–00	17 – 3
6EY–82593–01	16 – 30

PART NO.	REF. NO.
F4P–8259E–32	31 – 13
6GA–8259L–60	16 – 12
6CS–8273J–11	17 – 14
6EY–83618–10	17 – 18
60E–83627–00	6 – 17
6EY–84385–00	10 – 6
6AA–85542–00	16 – 28
6DE–85790–00	17 – 17
61A–85790–01	17 – 7
8FP–85886–00	5 – 14
F4S–85887–00	30 – 40
2S3–85896–02	17 – 11
6GA–8591A–40	16 – 2
6EY–8591S–00	16 – 3
F5P–E243A–00	10 – 30
F5P–E243E–00	10 – 1
67X–E2590–00	10 – 32
67X–E2590–10	10 – 32
1NS–F1338–00	18 – 23
	28 – 12
	28 – 34
J0P–F4742–00	23 – 49
B4F–F817K–00	35 – 6
6GA–G2414–00	36 – 22
6MP–G2414–00	11 – 8
6GA–G5235–00	12 – 2
6GA–G5332–00	12 – 1
6MP–G5511–00	12 – 3
6GA–G5514–00	11 – 11
6GA–G5593–00	12 – 8
6MP–G5833–00	11 – 1
6MP–G5874–00	11 – 5
	36 – 21
6MP–G6882–00	11 – 7
6MP–G6883–00	11 – 4
	36 – 20
5FU–H2100–21	18 – 4
6MP–R1312–00	11 – 6
6MP–R1313–00	11 – 24
6GY–R1314–00	13 – 1
6MP–R1318–00	11 – 20
6GA–R1321–00	11 – 18
6EX–R1326–10	11 – 14
6MP–R2358–00	13 – 8
F5P–U0132–00	24 – 13
F5M–U0511–00	22 – 9
	22 – 19
F5P–U0512–00	27 – 20

PART NO.	REF. NO.
F5P–U0512–00	27 – 22
F5P–U1174–00	27 – 28
F3Y–U1355–19	33 – 7
F3P–U1369–09	32 – 19
F3X–U13B4–00	22 – 30
	22 – 35
F2S–U13C1–00	21 – 22
	21 – 25
	22 – 3
	22 – 37
	22 – 39
	23 – 43
	33 – 8
F3Y–U1426–01	11 – 36
	11 – 37
F5P–U142A–00	33 – 1
F5P–U142D–00	33 – 4
F2N–U142L–00	12 – 13
	18 – 13
	20 – 10
	20 – 14
	24 – 16
	25 – 3
	25 – 10
	25 – 22
	25 – 32
	25 – 39
	25 – 44
	29 – 17
F3Y–U142L–00	23 – 47
	27 – 11
	30 – 44
	32 – 22
F5P–U1439–00	21 – 5
F5P–U143D–00	33 – 2
F5P–U143E–00	33 – 3
F4P–U1454–00	22 – 2
	22 – 5
F5M–U1454–00	27 – 17
6GA–U1461–10	13 – 11
F1K–U1468–03	32 – 23
F2S–U1516–00	31 – 6
F5G–U151R–00	33 – 10
F3Y–U153K–00	21 – 19
	21 – 21
	21 – 24
	22 – 28
	22 – 33

PART NO.	REF. NO.
F5P–U1552–00	31 – 1
F4P–U155C–00	31 – 2
F4P–U155D–00	31 – 3
F5P–U156E–00	33 – 5
F2N–U1628–10	23 – 13
F1B–U1629–00	27 – 29
F1B–U1653–03	23 – 17
F2C–U1743–00	18 – 5
F3Y–U2127–00	26 – 1
F3Y–U213G–01	26 – 2
F3Y–U2155–01	12 – 10
F1S–U2280–02	23 – 29
F1S–U2285–01	23 – 30
F5P–U2318–00	24 – 12
F5P–U2511–01	25 – 1
F5P–U251D–00	25 – 28
F5P–U251E–00	25 – 35
F5P–U252C–01	25 – 42
F5P–U252E–01	25 – 11
F5P–U252F–01	25 – 23
F5P–U2535–40	25 – 6
F5P–U2536–40	25 – 18
F5P–U2537–40	25 – 30
F5P–U2538–40	25 – 37
F5P–U256C–00	25 – 4
F5P–U256D–00	25 – 16
F5P–U264L–00	20 – 21
F3Y–U2663–00	20 – 2
F4L–U266B–01	20 – 19
F5P–U266C–00	24 – 18
	27 – 18
F3Y–U266D–10	27 – 6
F5P–U266E–00	27 – 8
F5P–U266H–01	24 – 9
6MP–U269B–00	11 – 25
F5P–U271B–00	27 – 9
F3X–U2723–00	21 – 11
F2C–U2733–00	29 – 20
F5P–U273B–00	11 – 31
F5P–U278A–00	23 – 34
F2S–U278F–01	23 – 35
F2S–U278H–01	23 – 36
F4N–U2875–00	21 – 15
F4P–U3222–00	11 – 32
F5P–U351N–00	25 – 46
F5P–U351P–00	25 – 47
F5P–U351R–00	25 – 48
F5P–U351S–00	25 – 49

PART NO.	REF. NO.
F5P–U353C–00	22 – 36
F5P–U353D–00	22 – 38
F5P–U3581–00	25 – 45
F5P–U358B–00	25 – 54
F5P–U3663–10	22 – 26
F5P–U3664–10	22 – 31
F5P–U370H–60	27 – 1
F3Y–U3746–01	12 – 12
F1K–U3774–00	27 – 12
F5P–U377B–01	22 – 6
F5P–U377C–01	22 – 16
F5P–U377M–00	20 – 8
F5P–U377N–00	20 – 12
F2C–U3850–00	27 – 3
F5P–U4114–00	34 – 4
F5P–U411B–00	24 – 8
F5P–U411H–00	34 – 6
F3Y–U411H–02	34 – 5
F5P–U415B–20	35 – 3
F5P–U416A–20	35 – 5
F5S–U417B–10	34 – 1
F5S–U417C–10	34 – 2
F5S–U417M–10	34 – 3
F7M–U418F–10	35 – 7
F5P–U419E–00	35 – 8
F5M–U41B1–00	35 – 1
F5M–U41B1–20	35 – 2
F5P–U41F5–20	35 – 4
F2C–U4256–00	18 – 27
	18 – 28
F3Y–U4261–00	29 – 11
F5P–U4705–00	21 – 12
F5P–U4755–00	22 – 4
F5P–U475A–00	20 – 1
F5P–U4785–00	22 – 1
F5M–U491K–00	25 – 2
	25 – 43
F5R–U491K–00	24 – 11
F3X–U4949–00	25 – 8
	25 – 14
	25 – 20
	25 – 26
	25 – 33
	25 – 40
GP7–U4953–10	23 – 15
	23 – 16
	27 – 30
F5P–U4994–10	23 – 41

PART NO.	REF. NO.
F5P–U513M–00	20 – 16
F5G–U515C–00	21 – 17
F5P–U516N–20	21 – 18
F4P–U516R–01	20 – 7
	20 – 22
	21 – 7
	22 – 8
	22 – 14
	22 – 18
	22 – 24
	24 – 10
	27 – 19
	27 – 21
F2X–U5175–00	20 – 6
	21 – 6
	22 – 13
	22 – 23
F3X–U517E–00	20 – 11
	20 – 15
	20 – 17
	21 – 1
	21 – 2
	21 – 8
	21 – 9
	21 – 10
	22 – 7
	22 – 17
	22 – 27
	22 – 32
	24 – 19
	27 – 27
	33 – 6
F5P–U517H–00	21 – 13
F5P–U517R–00	21 – 16
F5P–U517W–20	21 – 20
F5P–U517X–20	21 – 23
F5P–U519D–00	21 – 14
F5P–U519F–00	20 – 20
F5P–U5207–70	24 – 1
F5P–U5545–00	23 – 52
F5P–U5554–00	21 – 3
F4P–U5568–00	18 – 18
F1K–U5772–04	28 – 35
	29 – 6
F3Y–U5901–00	34 – 7
F5P–U591A–00	27 – 7
F3Y–U592A–10	27 – 5
F5P–U596B–00	21 – 30

PART NO.	REF. NO.
F5P–U596C–00	21 – 32
F5G–U6829–00	21 – 4
	22 – 10
	22 – 15
	22 – 20
	22 – 25
	22 – 29
	22 – 34
F5G–U6829–09	22 – 11
	22 – 12
	22 – 21
	22 – 22
	25 – 7
	25 – 13
	25 – 19
	25 – 25
	25 – 31
	25 – 38
F5P–U6862–00	27 – 26
F5P–U723D–00	24 – 14
F5P–U723E–00	24 – 15
F1W–U725E–00	32 – 21
F5P–U72B7–00	11 – 35
EU0–U7354–00–01	19 – 10
EU0–U7354–00–03	19 – 10
EU0–U7354–00–05	19 – 10
EU0–U7354–00–10	19 – 10
EU0–U7354–00–20	19 – 10
F1B–U751G–10	29 – 15
F2C–U753B–01	29 – 18
F3Y–U7550–01	29 – 1
F5P–U7555–00	29 – 8
F2C–U7564–02	29 – 19
GJ1–U7578–22	18 – 22
F1S–U757B–01	29 – 16
F3Y–U758D–00	29 – 13
F2S–U759B–00	28 – 38
	28 – 39
F1K–U759C–00	28 – 42
F1W–U759C–01	18 – 7
	28 – 40
	28 – 41
F5P–U761D–00	23 – 2
F5P–U7698–00	23 – 3
F3Y–U7711–02	28 – 13
F4L–U773D–00	28 – 44
F3Y–U773D–11	10 – 2
	23 – 8

PART NO.	REF. NO.
F3Y–U773D–11	23 – 11
F3Y–U773D–20	10 – 31
F5R–U7747–00	24 – 7
F5P–U7747–01	24 – 6
F3Y–U7767–00	28 – 29
F1B–U7773–00	28 – 15
F5G–U7823–00	20 – 5
	33 – 11
F2S–U7823–01	18 – 17
F5G–U7823–09	20 – 3
	20 – 4
	20 – 18
F3X–U7823–12	21 – 29
F5P–U7824–00	27 – 25
F2N–U7831–10	28 – 18
GP7–U7832–01	28 – 19
GP7–U7833–11	28 – 20
GP7–U7834–00	28 – 23
GP7–U7835–00	28 – 21
GP7–U783F–00	28 – 25
F5P–U7844–00	28 – 26
F5P–U784C–00	23 – 7
	23 – 10
F5P–U7856–01	28 – 11
F0D–U785G–11	28 – 33
GP7–U785H–01	28 – 30
F2N–U8169–10	23 – 28
F5P–U8187–60	27 – 23
F5P–U8188–00	27 – 24
F7K–U8198–00	25 – 5
	25 – 12
	25 – 17
	25 – 24
	25 – 29
	25 – 36
F5S–U820A–00	18 – 16
F2S–U8211–00	18 – 9
EU0–U821D–00	29 – 3
F4P–U821D–00	18 – 15
F1S–U8221–00	18 – 8
	23 – 50
	23 – 51
	28 – 14
	28 – 43
	29 – 2
	29 – 12
EU0–U8221–31	18 – 6
F3J–U822E–01	18 – 20

PART NO.	REF. NO.
F5P–U8238–00	21 – 26
F5P–U8262–01	21 – 28
F2C–U826C–00	27 – 16
F1K–U826C–03	23 – 44
F4P–U8285–00	30 – 41
F1W–U828M–00	18 – 24
	18 – 29
	18 – 32
	18 – 36
	26 – 3
	29 – 21
F5P–U8572–00	11 – 33
F2S–U8577–00	11 – 34
F2S–U8592–00	18 – 10
F2S–U8593–00	18 – 11
F5P–U8701–00	24 – 17
F5P–U8702–00	23 – 46
F5P–U882F–00	23 – 39
F3Y–U883B–00	12 – 16
F5P–U883E–00	12 – 11
F2S–U883T–00	23 – 26
F5P–U884B–00	24 – 4
F5P–U884C–00	24 – 5
F5P–U884R–00	23 – 40
F5P–U885N–00	23 – 24
F5P–U885P–00	23 – 25
F3Y–U892D–01	12 – 17
F5P–U89C1–60	24 – 3
F5P–U89K1–60	24 – 2
F5P–U9310–00	27 – 32
F5P–UFJ53–60	27 – 2
F5P–UFTAA–00	33 – 9
F5P–UM8U0–00	25 – 50
F5P–UM8U1–00	25 – 51
F5P–UM8U2–00	25 – 52
F5P–UM8U3–00	25 – 53
6GA–W0001–02	36 – 1
6MP–W0001–20	36 – 17
6GA–W009B–01	2 – 1
90105–06027	1 – 5
90105–06035	10 – 29
90105–06M07	2 – 25
90105–06M15	8 – 21
90105–07004	4 – 4
90105–08243	5 – 9
90105–08860	23 – 27
90105–10M49	19 – 6
90105–12101	3 – 12

PART NO.	REF. NO.
90109–06295	4 – 20
90109–06308	2 – 12
90109–066F0	1 – 14
90109–06832	12 – 14
90109–06M92	19 – 3
90110–06040	23 – 23
90110–06172	7 – 7
	7 – 10
90110–06274	4 – 17
90110–06287	7 – 12
90110–06335	7 – 13
90110–06382	31 – 4
90110–06822	11 – 16
90110–08212	14 – 5
90116–10803	11 – 2
90119–06078	1 – 19
90119–06311	16 – 7
90119–06832	18 – 14
90119–06880	32 – 24
90119–06889	11 – 9
90119–06891	23 – 42
90119–06892	20 – 9
	20 – 13
	21 – 27
	21 – 31
	21 – 33
90119–06893	30 – 42
90119–068E3	13 – 4
90119–069UP	27 – 4
90119–06MA3	17 – 16
90119–08034	9 – 4
90119–08097	9 – 5
90119–08169	6 – 3
90119–08187	6 – 4
90119–08822	27 – 13
90119–08823	19 – 9
90119–08827	32 – 26
90119–08828	27 – 10
90119–08840	11 – 29
	13 – 2
90119–08851	30 – 43
90119–08859	19 – 8
90119–08861	23 – 37
	23 – 38
90119–08870	27 – 33
90119–09004	2 – 3
90119–10004	1 – 8
90119–10804	27 – 15

PART NO.	REF. NO.
90119–10810	11 – 3
	11 – 23
90149–06190	7 – 3
90151–06024	2 – 7
90160–05003	16 – 29
90169–049U1	28 – 22
90176–08080	5 – 19
90179–08327	3 – 4
90179–20019	3 – 23
90201–06801	11 – 27
	13 – 6
	13 – 9
90201–068G0	31 – 5
90201–06906	30 – 6
90201–10591	3 – 33
90201–109U6	27 – 14
	32 – 20
90201–121H0	3 – 13
90201–20030	3 – 21
90201–24800	12 – 9
90201–30013	14 – 6
90208–20001	3 – 22
90215–10003	3 – 32
90267–329UR	28 – 24
90267–48806	18 – 25
	18 – 31
	18 – 33
	18 – 38
	26 – 4
	29 – 22
90267–489U1	18 – 12
	23 – 45
	28 – 36
	29 – 5
	29 – 7
90267–489U2	23 – 53
	28 – 6
90267–489U6	25 – 9
	25 – 15
	25 – 21
	25 – 27
	25 – 34
	25 – 41
	28 – 8
90267–489U8	23 – 4
	32 – 18
90280–03045	3 – 11
90387–06119	16 – 9

PART NO.	REF. NO.
90387–06119	30 – 16
90387–06319	13 – 5
90387–06M05	8 – 10
90387–08M30	11 – 30
	13 – 3
90387–08M37	6 – 2
	6 – 15
90401–20008	7 – 16
90430–06M03	2 – 26
90430–08119	1 – 7
90430–08209	7 – 24
	36 – 10
90445–14M24	11 – 21
90445–16019	10 – 15
90445–16020	10 – 18
90445–18012	10 – 9
90445–18018	10 – 25
90445–18020	8 – 22
90445–18M06	7 – 19
90445–21015	10 – 13
90446–24M44	10 – 16
90446–24M89	10 – 5
90446–24MF4	8 – 23
90447–19004	8 – 17
90447–19014	8 – 28
	10 – 10
90450–90002	6 – 5
90450–99804	29 – 10
90450–99808	9 – 11
90450–99810	9 – 12
90464–10008	18 – 35
90464–12830	28 – 10
90464–20005	17 – 19
90464–32801	18 – 21
	18 – 26
	18 – 30
	18 – 34
	18 – 37
	29 – 23
90464–35132	8 – 30
	10 – 12
	17 – 5
90464–99804	26 – 5
90465–11829	11 – 22
	23 – 5
	28 – 5
	28 – 31
	28 – 32

PART NO.	REF. NO.
90465–13M18	6 – 6
90465–13M39	17 – 6
90467–110A1	8 – 26
90467–141A3	10 – 17
90467–150A5	10 – 4
	29 – 25
90467–160A0	10 – 11
	10 – 20
	10 – 22
	10 – 24
	10 – 26
90467–170A4	8 – 19
	8 – 24
	8 – 29
90467–170A5	7 – 21
90467–180A5	23 – 1
	23 – 12
90467–200A3	8 – 18
	10 – 33
	10 – 35
90467–200A4	10 – 14
90467–240A0	10 – 34
90467–240A3	10 – 36
90480–06M46	8 – 8
90480–22M15	6 – 1
	6 – 14
90601–155U4	12 – 15
	28 – 27
	28 – 28
90601–179U8	29 – 9
	29 – 14
90601–200U2	23 – 6
	29 – 24
91314–06065	1 – 17
91317–06014	14 – 11
91317–06035	14 – 9
91380–04030	31 – 7
91380–06016	17 – 13
91380–06020	8 – 11
92990–06100	15 – 10
92990–10600	17 – 8
92990–12200	23 – 20
9299R–05200	20 – 23
	23 – 32
9299R–08200	23 – 48
9299R–10200	27 – 35
93101–24001	12 – 7
	36 – 19

PART NO.	REF. NO.
93101–25M50	11 – 13
	36 – 24
93101–25M55	12 – 4
	36 – 18
93101–40001	3 – 18
	36 – 4
93101–40002	3 – 19
	36 – 5
93102–25M34	11 – 12
	36 – 23
93210–17010	2 – 16
	36 – 14
93210–19123	1 – 13
93210–19522	8 – 4
93210–24M79	8 – 15
93210–32172	17 – 15
93210–44003	11 – 15
	36 – 25
93211–49800	11 – 19
	36 – 26
93306–00702	3 – 15
93306–205XG	12 – 6
93306–255X7	11 – 10
93306–30323	2 – 5
93306–90901	3 – 16
93310–42239	3 – 28
93450–19095	3 – 10
93450–32152	2 – 9
93606–12019	9 – 3
	19 – 7
93606–19M23	8 – 6
94580–25060	7 – 15
94591–57140	4 – 14
94702–00409	16 – 1
95024–08030	9 – 10
95380–06600	13 – 7
	13 – 10
95380–06700	15 – 9
95380–06800	11 – 26
9538R–06700	30 – 7
95612–08625	5 – 18
95720–08300	32 – 11
9572R–05300	23 – 33
9572R–06300	28 – 17
9572R–08300	23 – 14
	27 – 31
	27 – 34
95812–06012	4 – 22
95812–08070	2 – 4
95814–06020	5 – 10
	8 – 12
	16 – 11
95814–06035	8 – 7
95814–06045	2 – 15
95814–06055	2 – 13
	8 – 13
95814–06085	2 – 14
95814–08020	7 – 23
95880–06016	16 – 5
95E34–06012	2 – 30
95E34–06020	7 – 22
95E34–06030	9 – 9
95E34–08012	1 – 6
97012–10025	3 – 31
97513–05514	14 – 12
97513–08514	18 – 41
97513–08530	15 – 8
97513–08535	5 – 17
97513–08555	2 – 21
97702–50520	5 – 15
97780–60520	17 – 4
9788R–05025	23 – 31
97E95–06520	17 – 10
97E95–06612	16 – 18
97E95–08540	2 – 27
98780–06016	11 – 28
99009–52500	12 – 5
99530–08016	7 – 11
99530–10014	2 – 10
99530–10114	2 – 11
99590–08012	2 – 20
99780–12600	23 – 19