YAMAHA

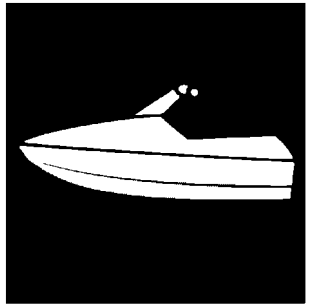

PARTS CATALOGUE

WaveRunner SuperJet
SJ1050-C (F4R6 /6JFF/6JF1)

YAMAHA
GENUINE
Parts & Accessories

31F4R-100E1

( )

SJ1050-C
PARTS CATALOGUE
©2025 by Yamaha Motor Co., Ltd.
1st edition, May 2025
All rights reserved.
Any reprinting or unauthorized use
without the written permission of
Yamaha Motor Co., Ltd.
is expressly prohibited.
Printed in Japan.

FOREWORD

This Parts Catalogue is related to the parts for the model(s) on the cover page. When you are ordering replacement parts, please refer to this Parts Catalogue and quote both part numbers and part names correctly.

1. Modifications or additions which have been made after the issue of the Parts Catalogue will be announced in the Parts News.
   It is advisable that you make the necessary corrections to the Parts Catalogue according to the Parts News.

2. Abbreviations
   The following abbreviations are used in this Parts Catalogue.

   “UR” Use specified parts number.

   “UN” Use as many as needed.

   “AP” Alternate Parts

   “LM” Locally Made (Parts need to be ordered locally)

   “F#” Frame No. (Applicable machine No.)

   “O/S” Over Size

3. The number of components for assembly
   - Parts, which are to be supplied in an assembly, are listed with a dot (.) in front of the part name as shown below.
   - The numeral appearing to the right of each component part indicates the quantity of parts for each assembly unit.

PART NO.	DESCRIPTION	Q’TY	REMARKS
2F5–83310–60	FRONT FLASHER LIGHT ASSY	2	
115–83311–60	.BULB (6V–18W)	1	

4. Applicable colours of graphics are represented in the “REMARKS” as shown below.

PART NO.	DESCRIPTION	Q’TY	REMARKS
2N4–24110–00–X5	FUEL TANK COMP.	2	MXR
3J1–24240–10	.GRAPHIC, FUEL TANK	1	FOR MXR

5. Note that the illustrations for reference in finding parts numbers are not to be used for assembling. When assembling, please use the applicable service manual.

6. The asterisk (*) before a reference number indicates modified items after the first edition.

7. Applicable Serial No.

Engine Serial No.

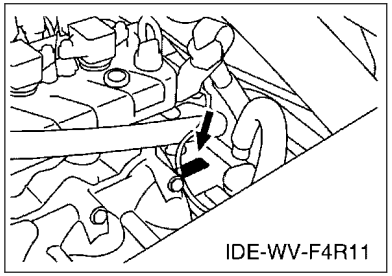

Primary Identification No.

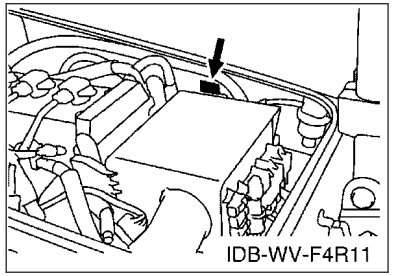

8. Applicable Colour Code (The (*) mark shows Model colour.)

Abbreviation	Colour Name	Colour Code
SC1(*)	BLACK COAT 1	GA5W

9. Quantity Column Information

Column No.	Name Of Q'ty Column	Destination
1	F4R6	CANADA, EUROPE

10. Applicable Starting Serial No.

Engine Serial No.

Serial No.	Name Of Q'ty Column	Model Code

Primary Identification No.

Serial No.	Name Of Q'ty Column	Model Code
F4R-	F4R6	F4R6

CONTENTS

CYLINDER....1
CRANKCASE.... 2
CRANKSHAFT & PISTON....4
VALVE.... 6
INTAKE....8
INTAKE 2....9
OIL PUMP....10
OIL COOLER....11
EXHAUST 1....13
EXHAUST 2....14
JET UNIT 1....16
JET UNIT 2....18
GENERATOR....19
STARTING MOTOR....20
ELECTRICAL 1....21
ELECTRICAL 2....22
ELECTRICAL 3....23
ENGINE MOUNT....24
ENGINE HATCH....25
HULL & DECK....27
GUNWALE & MAT....28
VENTILATION....29
FUEL TANK....30
EXHAUST 3....32
CONTROL CABLE....33
STEERING 1....34
STEERING 2....36
GRAPHICS....38
IMPORTANT LABELS....39
REPAIR KIT 1....40

INDEX

NUMERICAL INDEX....41

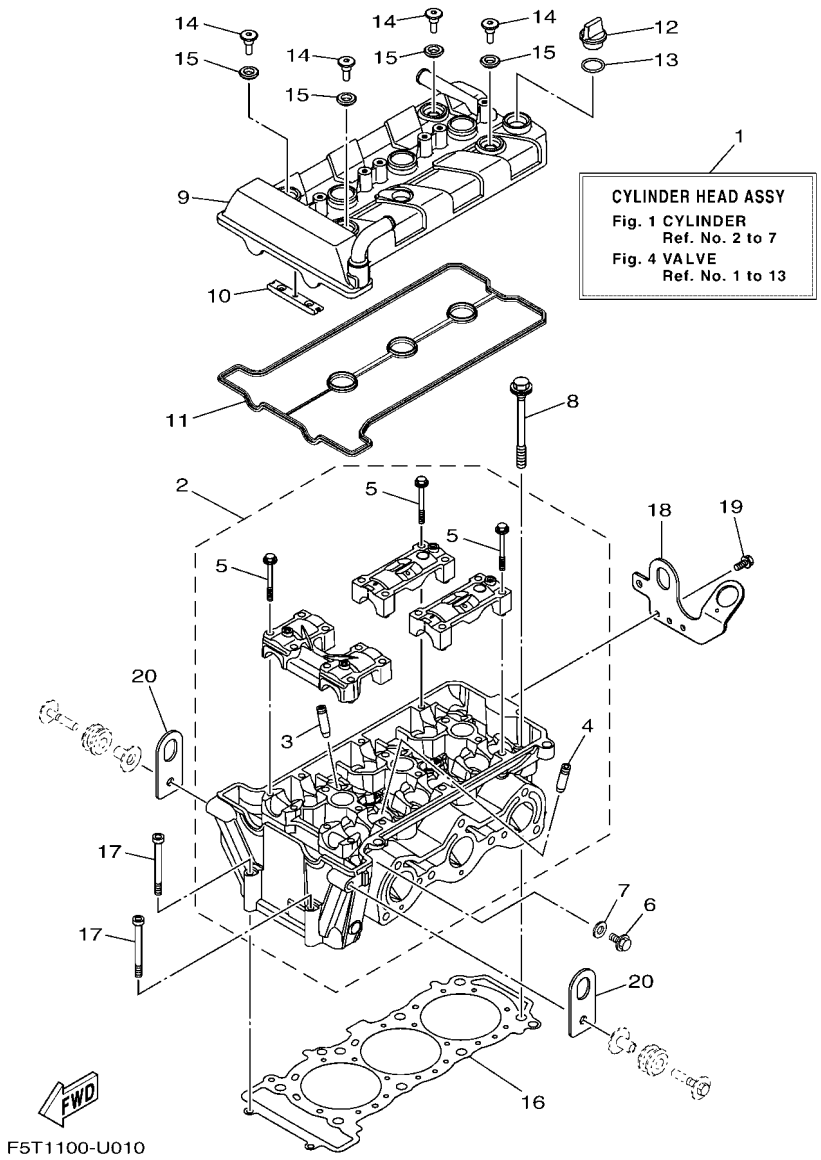

FIG. 1 CYLINDER

REF. NO.	PART NO.	DESCRIPTION	F4R6					REMARKS
1	6EY–11110–00	CYLINDER HEAD COMPLETE	1					
2	6EY–11102–00	CYLINDER HEAD ASSY	1					
3	2C0–11133–11	.GUIDE, VALVE 1	6					
4	8HF–11134–10	.GUIDE, VALVE 2	6					
5	90105–06027	.BOLT, FLANGE	16					
6	95E34–08012	BOLT, FLANGE DEEP RECESS	1					
7	90430–08119	GASKET	1					
8	90119–10004	BOLT, WITH WASHER	8					
9	6EY–11191–10	COVER, CYLINDER HEAD 1	1					
10	5BE–12241–01	GUIDE, STOPPER 2	1					
11	6EY–11193–00	GASKET, HEAD COVER 1	1					
12	3Y1–15363–10	PLUG, OIL	1					
13	93210–19123	O-RING	1					
14	90109–066F0	BOLT	4					
15	5VY–1111G–00	RUBBER, MOUNT 1	4					
16	6EY–11181–01	GASKET, CYLINDER HEAD 1	1					
17	91314–06065	BOLT, HEXAGON SOCKET HEAD	2					
18	6EY–1111E–10	HANGER, ENGINE 2	1					
19	90119–06078	BOLT, WITH WASHER	2					
20	6EY–11119–00	HANGER, ENGINE	2					

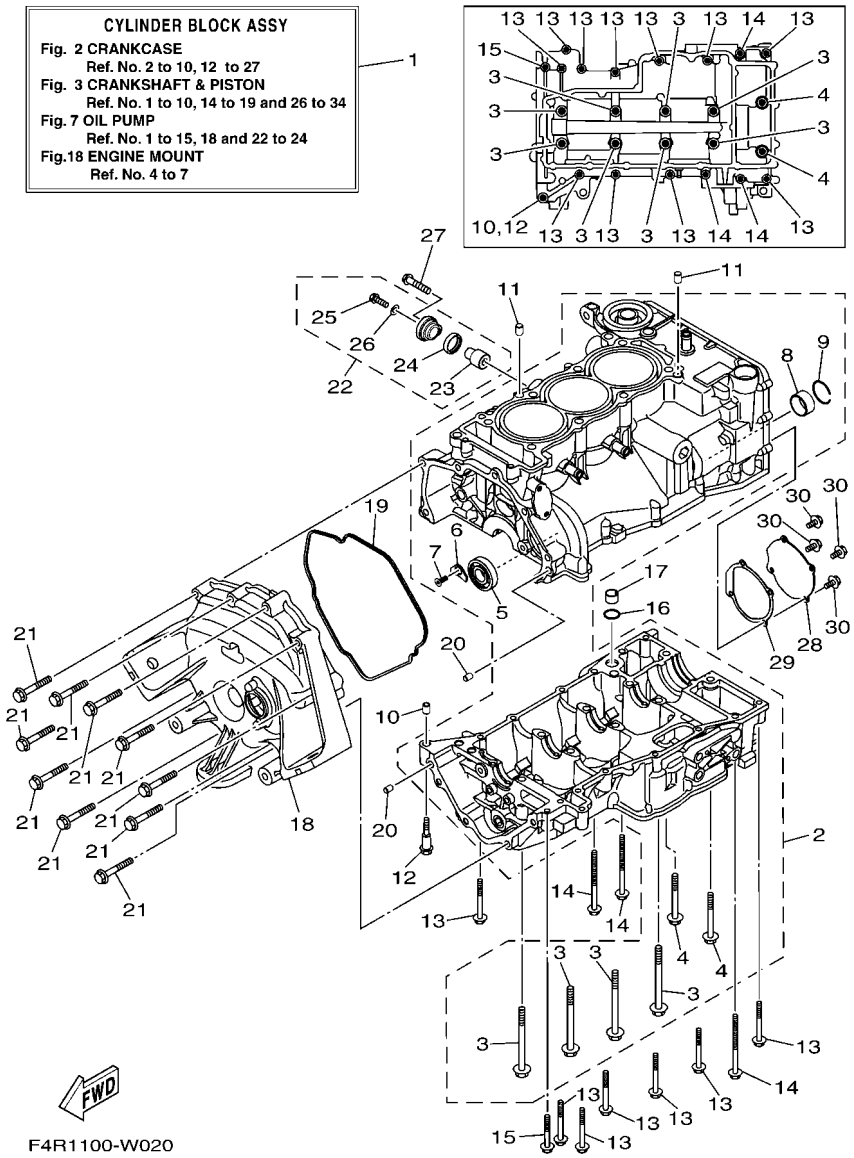

FIG. 2 CRANKCASE

REF. NO.	PART NO.	DESCRIPTION	F4R6					REMARKS
1	6GA–W009B–01	CYLINDER BLOCK ASSY	1					
2	6EY–15109–08	CRANKCASE ASSY	1					
3	90119–09004	.BOLT, WITH WASHER	8					
4	95812–08070	.BOLT, FLANGE	2					
5	93306–30323	.BEARING	1					
6	4JT–15381–01	.PLATE, BEARING COVER	1					
7	90151–06024	.SCREW, COUNTERSUNK	1					
8	8ES–11428–01	.BEARING 1	1					
9	93450–32152	.CIRCLIP	1					
10	99530–10014	PIN, DOWEL	1					
11	99530–10114	PIN, DOWEL	2					
12	90109–06308	BOLT	1					
13	95817–06055	BOLT, FLANGE	11					
14	95814–06085	BOLT, FLANGE	3					
15	95814–06045	BOLT, FLANGE	1					
16	93210–17010	O-RING	1					
17	8ES–13284–00	PIPE	1					
18	6EY–15421–00	COVER, CRANKCASE 2	1					
19	6EY–15461–00	GASKET, CRANKCASE COVER 2	1					
20	99590–08012	PIN, DOWEL	2					
21	97513–08555	BOLT, WITH WASHER	10					
22	69J–11301–11	ANODE COVER ASSY	1					
23	68V–11325–02	.ANODE	1					
24	67F–11328–01	.GROMMET, ANODE	1					
25	90105–06M07	.BOLT, FLANGE	1					
26	90430–06M03	.GASKET	1					
27	97E95–08540	BOLT, HEXAGON W/W DEEP RECESS	1					

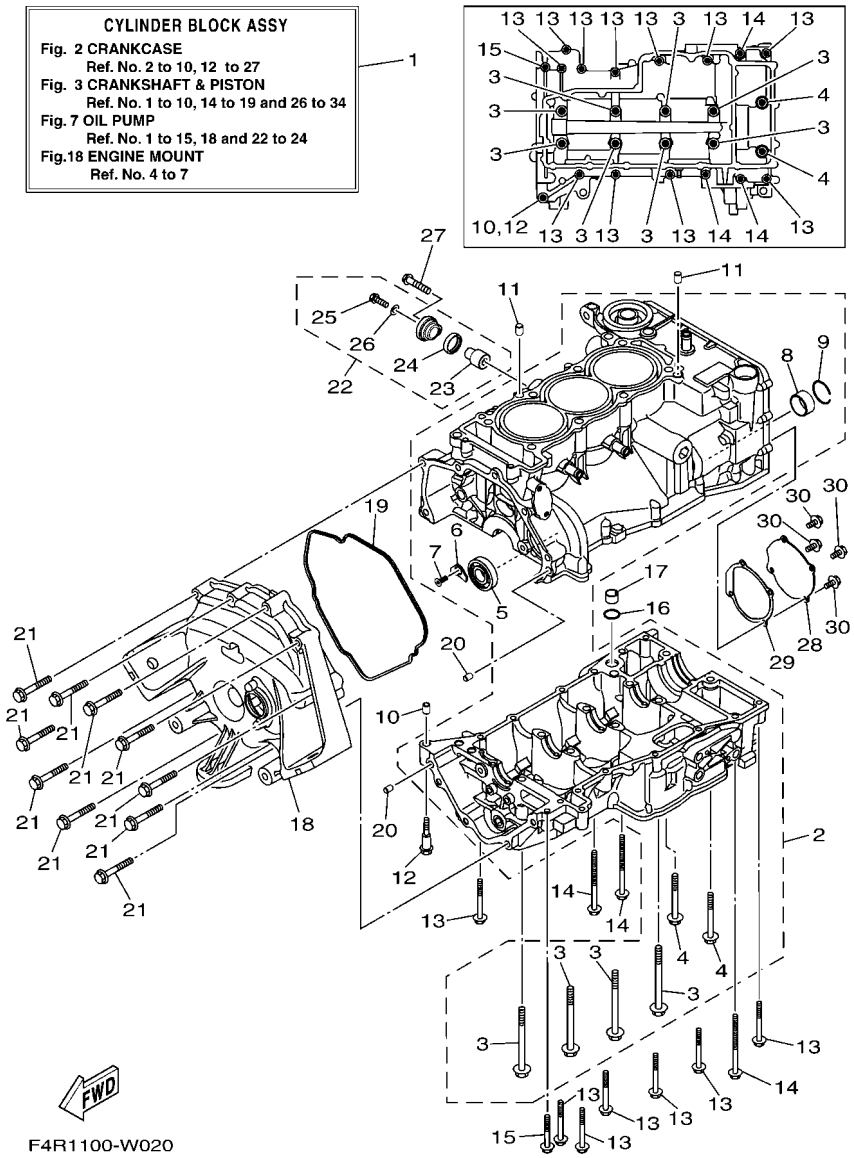

FIG. 2 CRANKCASE

REF. NO.	PART NO.	DESCRIPTION	F4R6					REMARKS
28	6EY–15589–01	PLATE	1					
29	6EY–15463–01	GASKET, 2	1					
30	95E34–06012	BOLT, FLANGE DEEP RECESS	4					

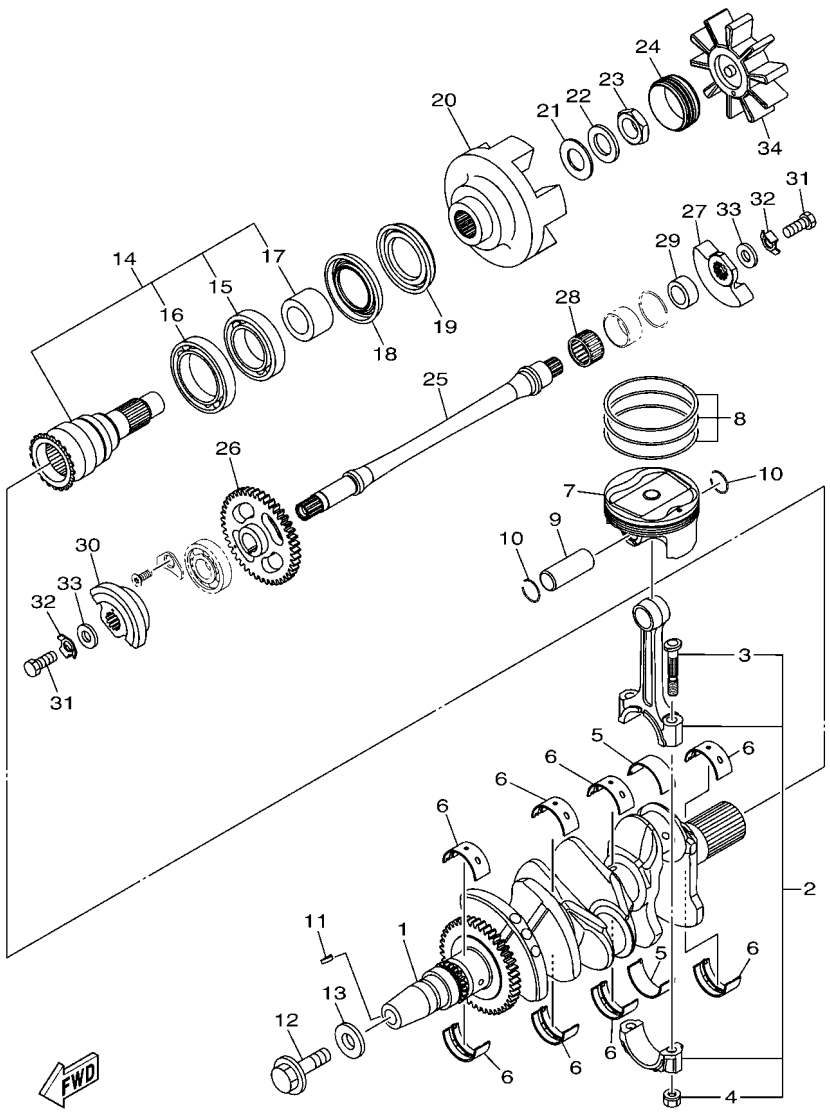

F4R3100-Y030

FIG. 3 CRANKSHAFT & PISTON

REF. NO.	PART NO.	DESCRIPTION	F4R6					REMARKS
1	6EY–11400–00	CRANKSHAFT ASSY	1					
2	B0F–11650–00	CONNECTING ROD ASSY	3					
3	5JW–11654–00	.BOLT, CONNECTING ROD	2					
4	90179–08327	.NUT	2					
5	5JW–11656–00	PLANE BEARING, CONNECTING ROD	6					UR BLUE
	5JW–11656–10	PLANE BEARING, CONNECTING ROD	6					UR BLACK
	5JW–11656–20	PLANE BEARING, CONNECTING ROD	6					UR BROWN
	5JW–11656–30	PLANE BEARING, CONNECTING ROD	6					UR GREEN
	5JW–11656–40	PLANE BEARING, CONNECTING ROD	6					UR YELLOW
	5JW–11656–50	PLANE BEARING, CONNECTING ROD	6					UR PINK
6	3LD–11416–10	PLANE BEARING, CRANKSHAFT 1	8					UR BLACK
	3LD–11416–20	PLANE BEARING, CRANKSHAFT 1	8					UR BROWN
	3LD–11416–30	PLANE BEARING, CRANKSHAFT 1	8					UR GREEN
	3LD–11416–40	PLANE BEARING, CRANKSHAFT 1	8					UR YELLOW
	3LD–11416–50	PLANE BEARING, CRANKSHAFT 1	8					UR PINK
	3LD–11416–60	PLANE BEARING, CRANKSHAFT 1	8					UR RED
	3LD–11416–70	PLANE BEARING, CRANKSHAFT 1	8					UR WHITE
7	8KH–11631–00	PISTON (STD)	3					
8	8KH–11603–02	PISTON RING SET (STD)	3					
9	6EY–11633–00	PIN, PISTON	3					
10	93450–19095	CIRCLIP	6					
11	90280–03045	KEY, WOODRUFF	1					
12	90105–12101	BOLT, FLANGE	1					
13	90201–121H0	WASHER, PLATE	1					
14	6EY–11406–10	SHAFT ASSY	1					
15	93306–00702	.BEARING	1					
16	93306–90901	.BEARING	1					

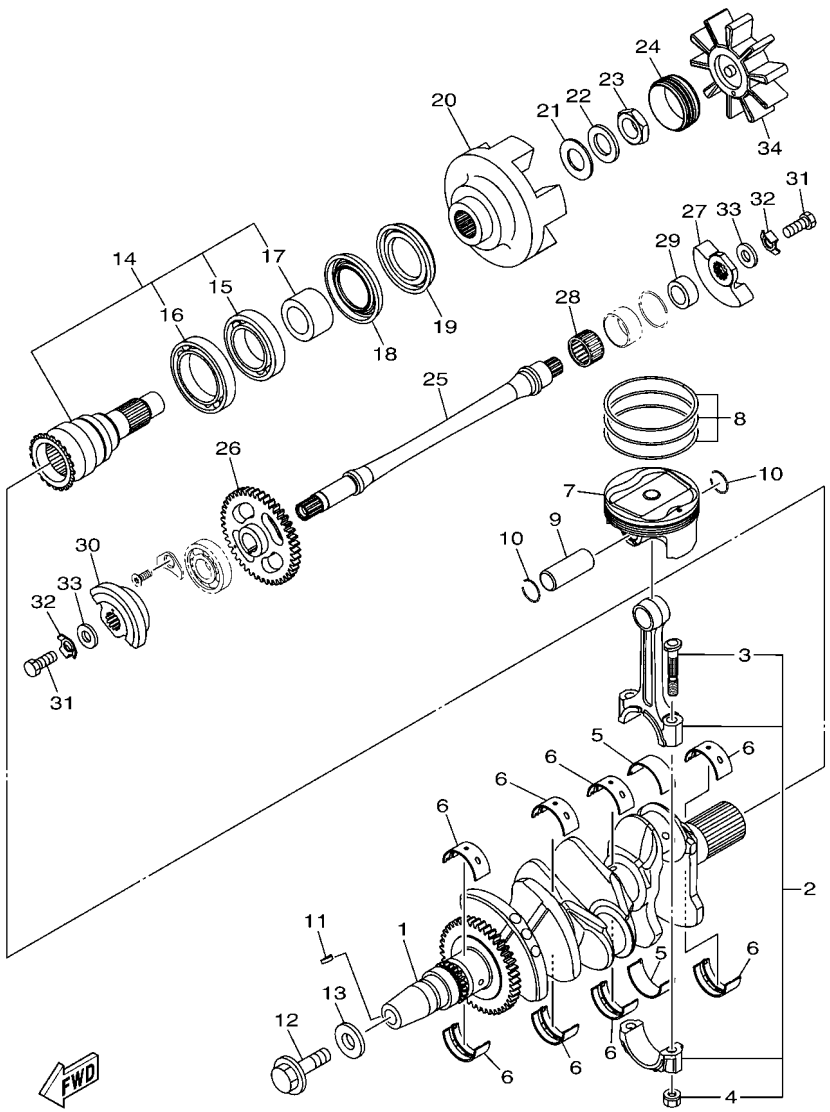

F4R3100-Y030

FIG. 3 CRANKSHAFT & PISTON

REF. NO.	PART NO.	DESCRIPTION	F4R6					REMARKS
17	6EY–11917–10	.COLLAR	1					
18	93101–40001	OIL SEAL	1					
19	93101–40002	OIL SEAL	1					
20	6JF–11571–00	FLYWHEEL	1					
21	90201–20030	WASHER, PLATE	1					
22	90208–20001	WASHER, CONICAL SPRING	1					
23	90179–20019	NUT	1					
24	6EY–45155–00	CAP	1					
25	2HC–11407–00	SHAFT ASSY., 2	1					
26	6EY–11531–00	GEAR, BALANCE WEIGHT	1					
27	8ES–11454–00	WEIGHT 1	1					
28	93310–42239	BEARING	1					
29	6EY–11478–00	COLLAR	1					
30	2HC–11464–00	WEIGHT 2	1					
31	97012–10025	BOLT	2					
32	90215–10003	WASHER, LOCK	2					
33	90201–10591	WASHER, PLATE	2					
34	6EY–4581J–00	RUBBER SHAFT COUPLING	1					

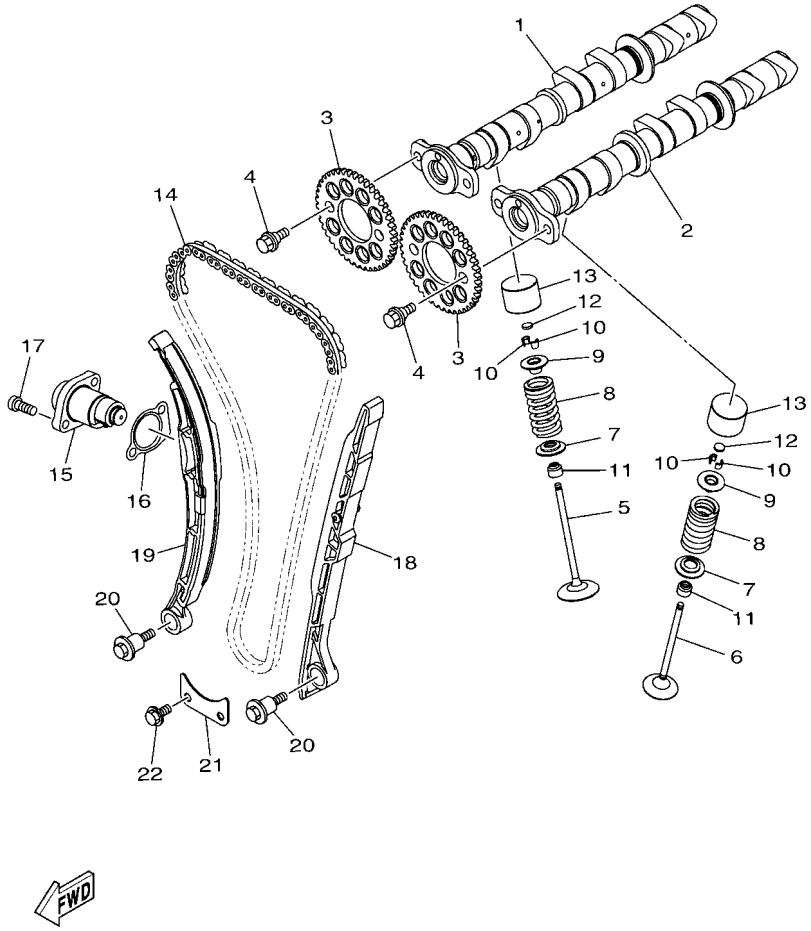

F4G1100-R040

FIG. 4 VALVE

REF. NO.	PART NO.	DESCRIPTION	F4R6					REMARKS
1	6EY–12170–00	CAMSHAFT ASSY 1	1					
2	6EY–12180–00	CAMSHAFT ASSY 2	1					
3	2HC–12176–00	SPROCKET, CAM CHAIN	2					
4	90105–07004	BOLT, FLANGE	4					
5	8GL–12111–10	VALVE, INTAKE	6					
6	8GL–12121–10	VALVE, EXHAUST	6					
7	1RC–12116–00	SEAT, VALVE SPRING	12					
8	8GL–12113–00	SPRING, VALVE INNER	12					
9	3D7–12117–00	RETAINER, VALVE SPRING	12					
10	1WG–12118–00	LOCK, VALVE SPRING RETAINER	24					
11	2HC–12119–00	SEAL, VALVE STEM	12					
12	1HX–12168–00	PAD, ADJUSTING 2 (1.20)	12					UR
	1HX–12168–20	PAD, ADJUSTING 2 (1.25)	12					UR
	1HX–12168–40	PAD, ADJUSTING 2 (1.30)	12					UR
	1HX–12168–60	PAD, ADJUSTING 2 (1.35)	12					UR
	1HX–12168–80	PAD, ADJUSTING 2 (1.40)	12					UR
	1HX–12168–A0	PAD, ADJUSTING 2 (1.45)	12					UR
	1HX–12168–F0	PAD, ADJUSTING 2 (1.50)	12					UR
	1HX–12168–H1	PAD, ADJUSTING 2 (1.55)	12					UR
	1HX–12168–K1	PAD, ADJUSTING 2 (1.60)	12					UR
	1HX–12168–M1	PAD, ADJUSTING 2 (1.65)	12					UR
	1HX–12168–R1	PAD, ADJUSTING 2 (1.70)	12					UR
	1HX–12168–U1	PAD, ADJUSTING 2 (1.75)	12					UR
	1HX–12168–W1	PAD, ADJUSTING 2 (1.80)	12					UR
	1HX–12168–Y1	PAD, ADJUSTING 2 (1.85)	12					UR
	1HX–12169–11	PAD, ADJUSTING 2 (1.90)	12					UR
	1HX–12169–31	PAD, ADJUSTING 2 (1.95)	12					UR

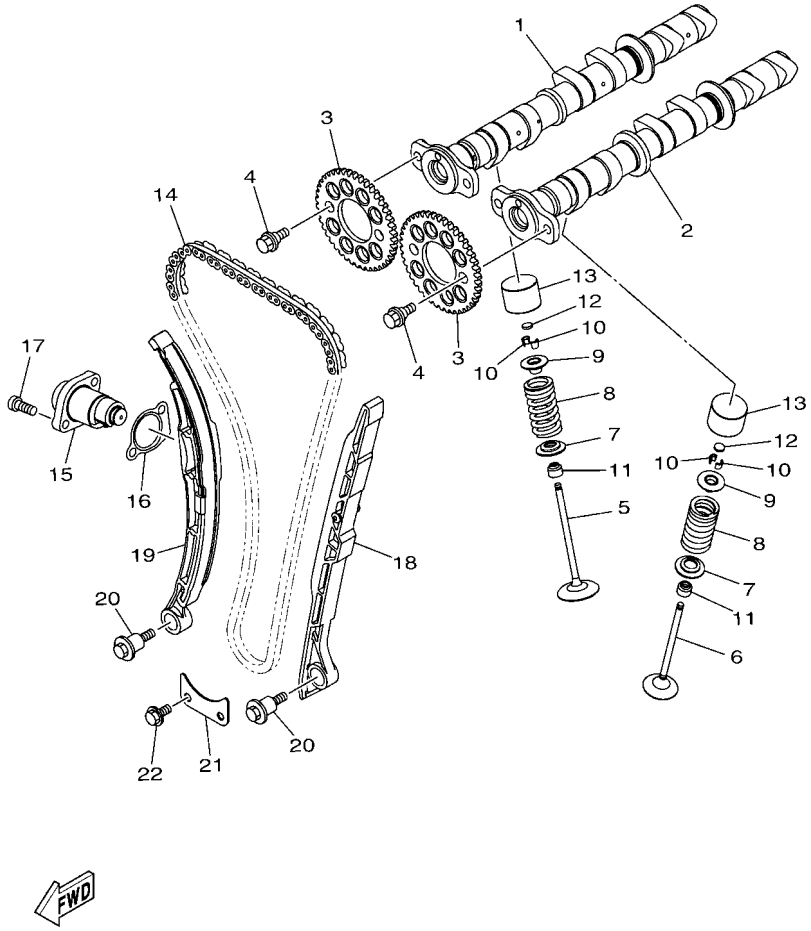

F4G1100-R040

FIG. 4 VALVE

REF. NO.	PART NO.	DESCRIPTION	F4R6					REMARKS
12	1HX–12169–50	PAD, ADJUSTING 2 (2.00)	12					UR
	1HX–12169–70	PAD, ADJUSTING 2 (2.05)	12					UR
	1HX–12169–90	PAD, ADJUSTING 2 (2.10)	12					UR
	1HX–12169–E0	PAD, ADJUSTING 2 (2.15)	12					UR
	1HX–12169–G0	PAD, ADJUSTING 2 (2.20)	12					UR
	1HX–12169–J0	PAD, ADJUSTING 2 (2.25)	12					UR
	1HX–12169–L0	PAD, ADJUSTING 2 (2.30)	12					UR
	1HX–12169–N0	PAD, ADJUSTING 2 (2.35)	12					UR
	1HX–12169–T0	PAD, ADJUSTING 2 (2.40)	12					UR
13	6EY–12153–01	LIFTER, VALVE	12					
14	94591–57140	CHAIN (98RH2010-140M)	1					
15	8KH–12210–00	TENSIONER ASSY, CAM CHAIN	1					
16	2C0–12213–00	GASKET, TENSIONER CASE	1					
17	90110–06274	BOLT, HEXAGON SOCKET HEAD	2					
18	6EY–12251–00	DAMPER, CHAIN 1	1					
19	2HC–12252–00	DAMPER, CHAIN 2	1					
20	90109–06295	BOLT	2					
21	6EY–12279–00	PLATE	1					
22	95812–06012	BOLT, FLANGE	2					

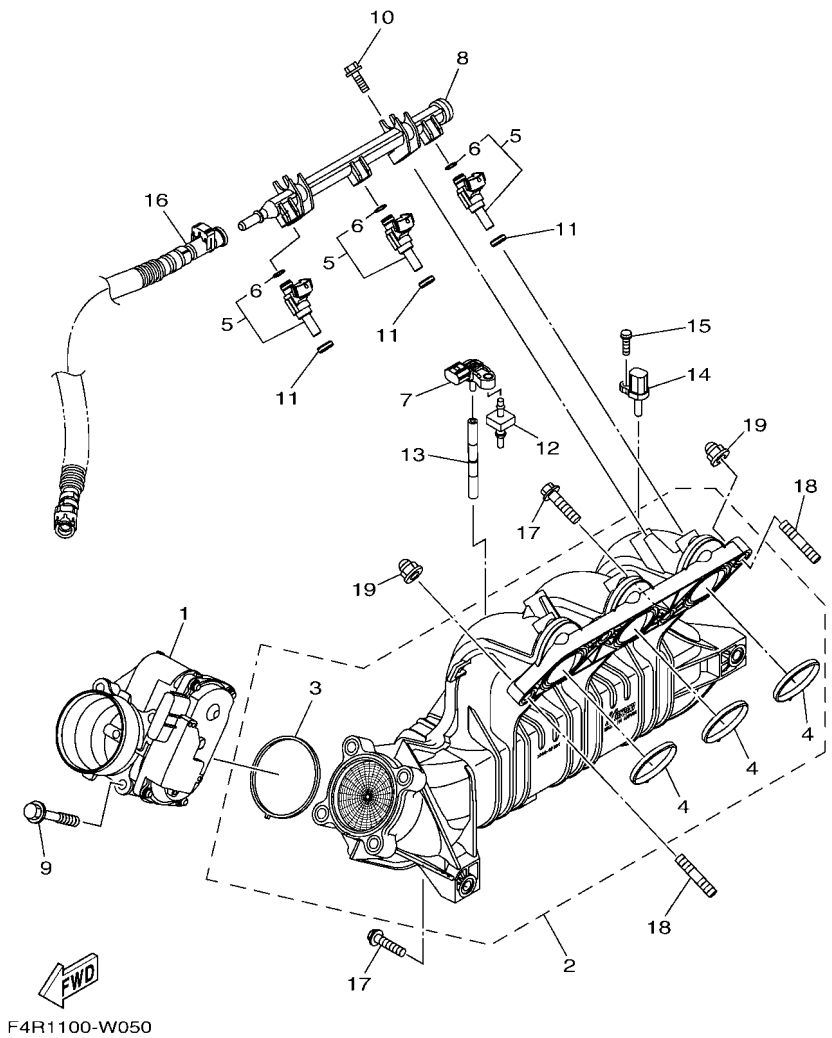

F4R1100-W050

FIG. 5 INTAKE

REF. NO.	PART NO.	DESCRIPTION	F4R6					REMARKS
1	6EY–13750–01	THROTTLE BODY ASSY	1					
2	6EY–13641–03	MANIFOLD, INTAKE 1	1					
3	6EY–14156–00	.GASKET, INSULATING	1					
4	6EY–14126–00	.GASKET	3					
5	2HC–13761–00	INJECTOR	3					
6	68V–1416A–00	.O-RING	1					
7	5S7–82380–00	SENSOR, PRESSURE	1					
8	6EY–12880–01	DELIVERY PIPE	1					
9	90105–08243	BOLT, FLANGE	4					
10	95814–06020	BOLT, FLANGE	2					
11	8FP–13556–10	GASKET, MANIFOLD	3					
12	6BH–14445–00	GROMMET	1					
13	6EY–13532–00	HOSE, VACUUM SENSING 3	1					
14	8FP–85886–00	SENSOR, AIR TEMPERATURE	1					
15	97702–50520	SCREW, TAPPING	1					
16	6AN–2450B–10	FUEL HOSE ASSY	1					
17	97513–08535	BOLT, WITH WASHER	4					
18	95612–08625	BOLT, STUD	2					
19	90176–08080	NUT, CAP	2					

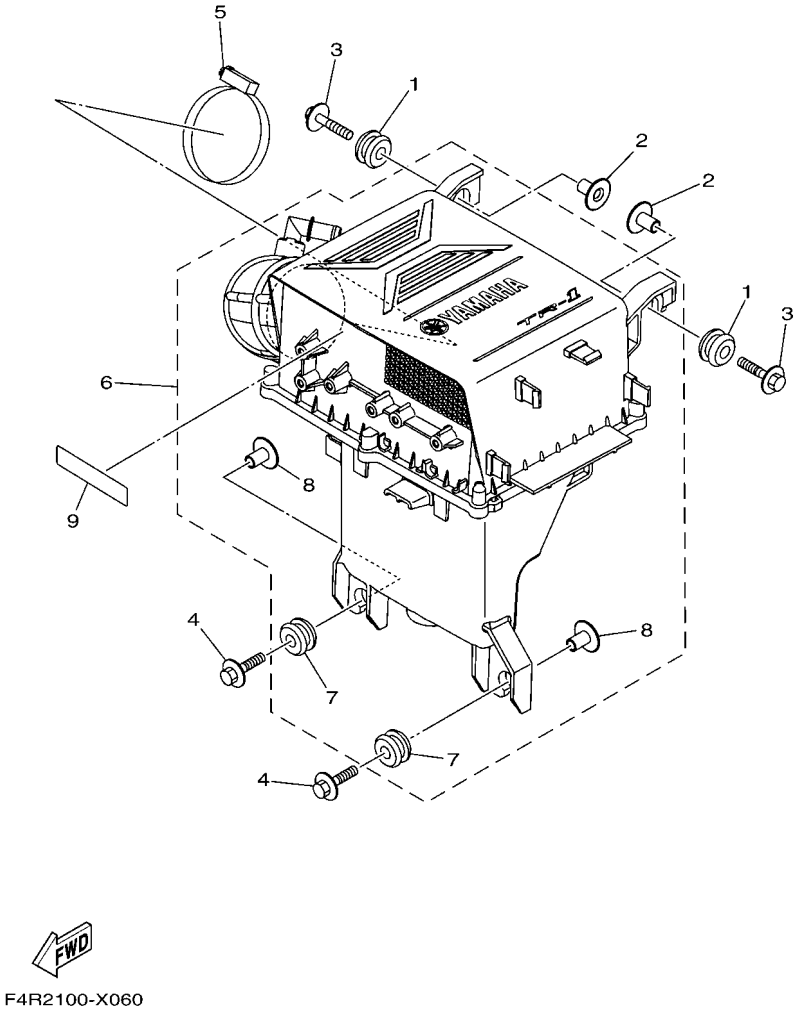

F4R2100-X060

FIG. 6 INTAKE 2

REF. NO.	PART NO.	DESCRIPTION	F4R6					REMARKS
1	90480–22M15	GROMMET	2					
2	90387–08M37	COLLAR	2					
3	90119–08169	BOLT, WITH WASHER	2					
4	90119–08187	BOLT, WITH WASHER	2					
5	90450–90002	HOSE CLAMP ASSY	1					
6	6JF–14410–10	AIR CLEANER ASSY.	1					
7	90480–22M15	.GROMMET	2					
8	90387–08M37	.COLLAR	2					
9	60E–83627–00	LABEL, CAUTION 7	1					

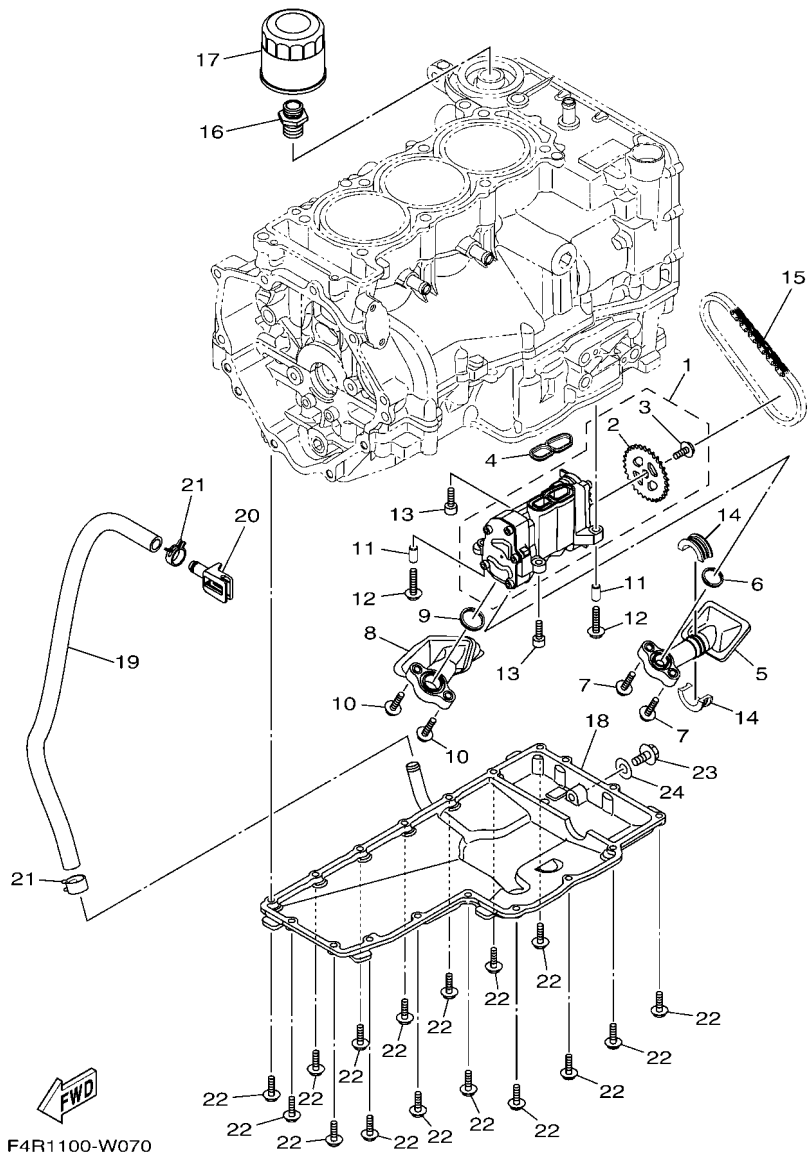

FIG. 7 OIL PUMP

REF. NO.	PART NO.	DESCRIPTION	F4R6					REMARKS
1	6EY–13300–00	OIL PUMP ASSY	1					
2	6EY–13355–00	.SPROCKET, DRIVEN	1					
3	90149–06190	.SCREW	1					
4	6EY–13563–00	GASKET	1					
5	6EY–13405–00	OIL PIPE COMP. 1	1					
6	6EY–13477–00	GASKET	1					
7	90110–06172	BOLT, HEXAGON SOCKET HEAD	2					
8	6EY–13406–00	OIL PIPE COMP. 2	1					
9	6EY–13476–00	GASKET	1					
10	90110–06172	BOLT, HEXAGON SOCKET HEAD	2					
11	99530–08016	PIN, DOWEL	2					
12	90110–06287	BOLT, HEXAGON SOCKET HEAD	2					
13	90110–06335	BOLT, HEXAGON SOCKET HEAD	2					
14	6EY–15486–00	GROMMET	2					
15	94580–25060	CHAIN (DID25 60LE)	1					
16	90401–20008	BOLT, UNION	1					
17	5GH–13440–90	ELEMENT ASSY, OIL CLEANER	1					
18	6EY–13417–10	COVER, STRAINER	1					
19	90445–18M06	HOSE (L500)	1					
20	6EY–13455–00	PLUG	1					
21	90467–170A5	CLIP	2					
22	95E34–06020	BOLT, FLANGE DEEP RECESS	18					
23	95814–08020	BOLT, FLANGE	1					
24	90430–08209	GASKET	1					

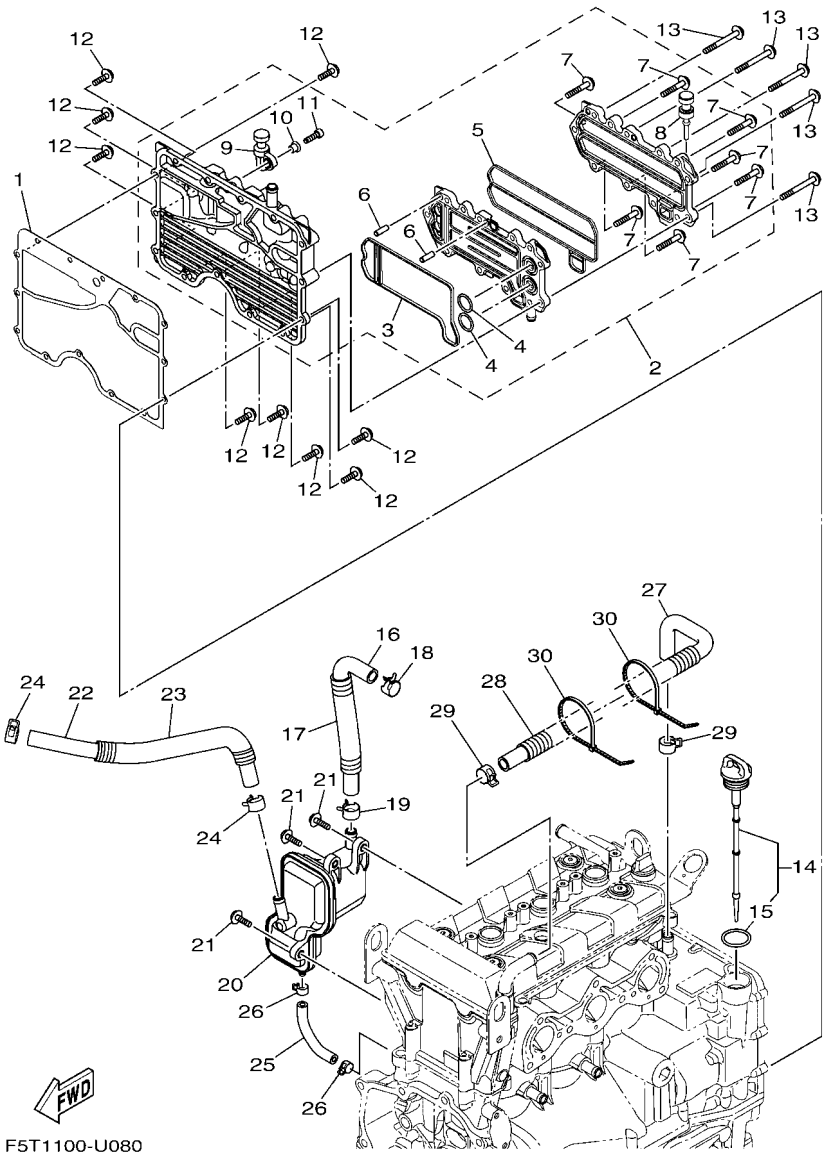

F5T1100-U080

FIG. 8 OIL COOLER

REF. NO.	PART NO.	DESCRIPTION	F4R6					REMARKS
1	6EY–15453–01	GASKET	1					
2	6EY–13470–03	OIL COOLER ASSY	1					
3	6EY–13556–10	.GASKET, MANIFOLD	1					
4	93210–19522	.O-RING	2					
5	6EY–13557–10	.GASKET	1					
6	93606–19M23	.PIN, DOWEL	2					
7	95814–06035	.BOLT, FLANGE	7					
8	90480–06M46	.GROMMET	1					
9	6S5–81364–11	.GROMMET	1					
10	90387–06M05	.COLLAR	1					
11	91380–06020	.BOLT	1					
12	95814–06020	BOLT, FLANGE	9					
13	95814–06055	BOLT, FLANGE	5					
14	6EY–15362–10	PLUG, OIL LEVEL	1					
15	93210–24M79	.O-RING	1					
16	6EY–11166–10	PIPE, BREATHER 1	1					
17	90447–19004	HOSE, WITH SPRING (L130)	1					
18	90467–200A3	CLIP	1					
19	90467–170A4	CLIP	1					
20	6EY–11164–00	SEPERATOR, OIL	1					
21	90105–06M15	BOLT, FLANGE	3					
22	90445–18020	HOSE (L420)	1					
23	90446–24MF4	HOSE (L350)	1					
24	90467–170A4	CLIP	2					
25	6EY–11125–00	PIPE, BREATHER 4	1					
26	90467–110A1	CLIP	2					
27	6EY–11126–10	PIPE, BREATHER 3	1					

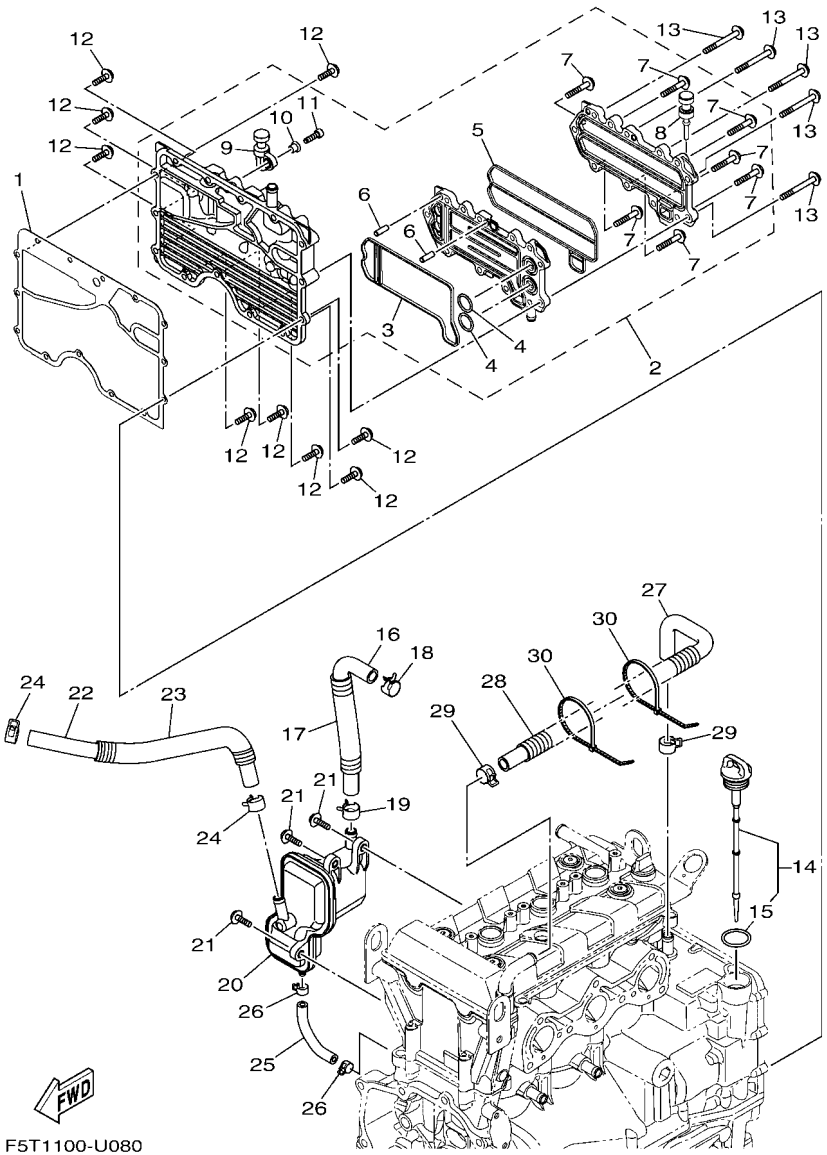

FIG. 8 OIL COOLER

REF. NO.	PART NO.	DESCRIPTION	F4R6					REMARKS
28	90447–19014	TUBE (L300)	1					
29	90467–170A4	CLIP	2					
30	90464–35132	CLAMP	2					

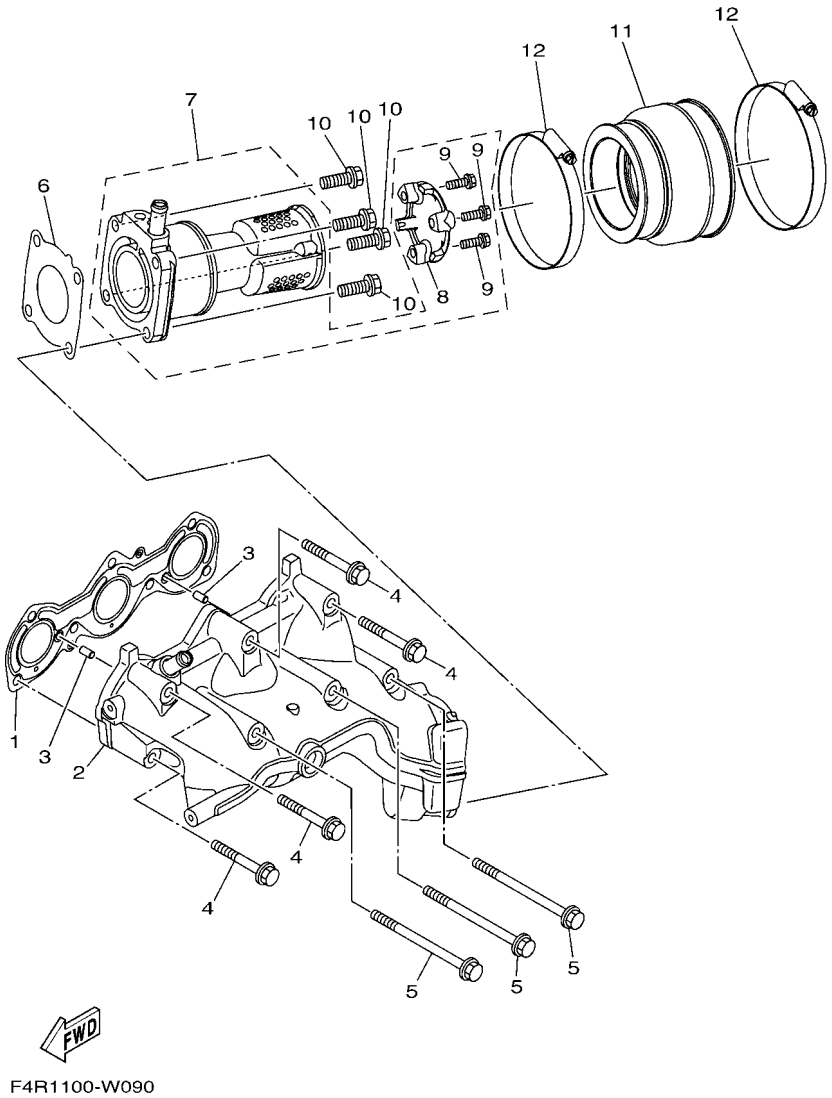

F4R1100-W090

FIG. 9 EXHAUST 1

REF. NO.	PART NO.	DESCRIPTION	F4R6					REMARKS
1	6GA–14613–00	GASKET, EXHAUST PIPE	1					
2	6GA–14711–00	MUFFLER 1	1					
3	93606–12019	PIN, DOWEL	2					
4	90119–08034	BOLT, WITH WASHER	4					
5	90119–08097	BOLT, WITH WASHER	3					
6	6GA–14739–00	GASKET, MUFFLER DAMPER 1	1					
7	6JF–14784–00	PIPE, TAIL	1					
8	6JF–1469W–00	.PLATE, SILENCER 6	1					
9	95E34–06030	.BOLT, FLANGE DEEP RECESS	3					
10	95024–08030	BOLT,FLG,(SMALL HEAD)	4					
11	6JF–14752–00	PIPE, OUTLET	1					
12	90450–99015	HOSE CLAMP ASSY	2					

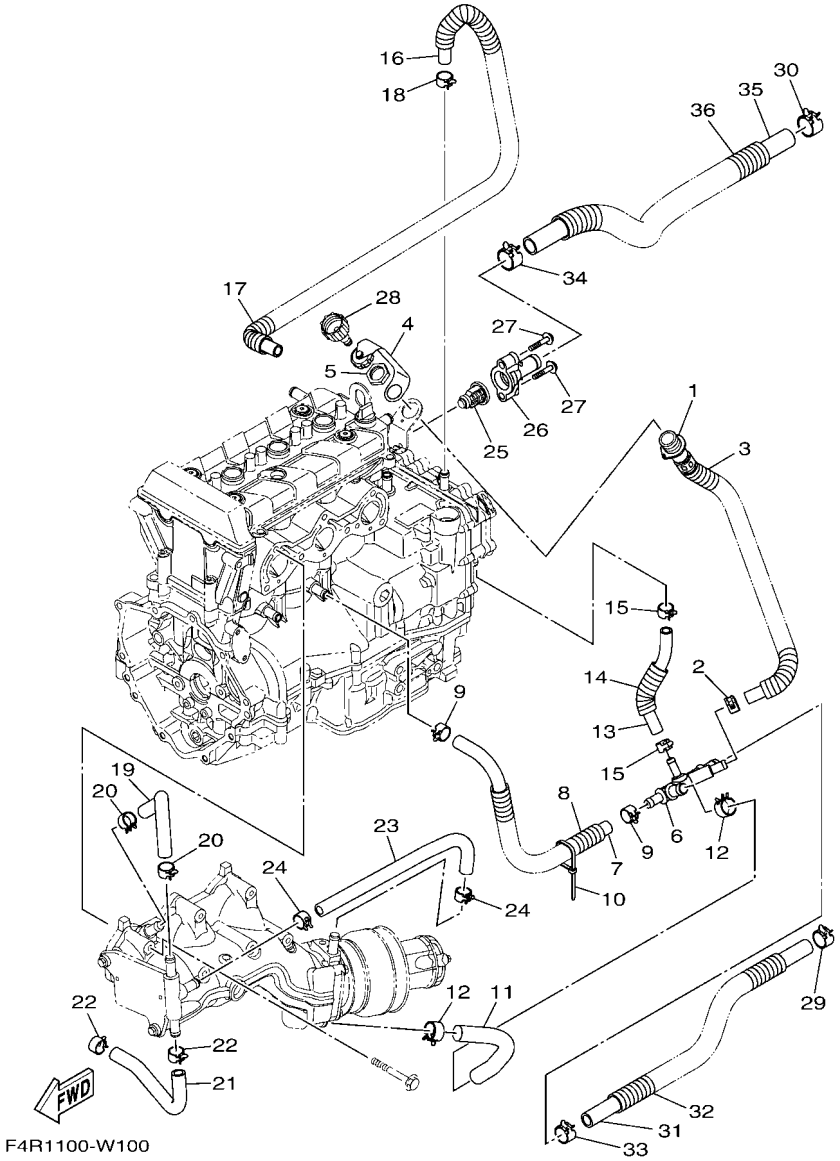

FIG. 10 EXHAUST 2

REF. NO.	PART NO.	DESCRIPTION	F4R6					REMARKS
1	6EY–12580–00	JOINT ASSY	1					
2	90467–150A5	CLIP	1					
3	90446–24M89	HOSE (L420)	1					
4	6EY–84385–00	CAP,1	1					
5	EU0–61652–00	NUT	1					
6	6EY–12584–00	JOINT, HOSE 3	1					
7	90445–18012	HOSE (L400)	1					
8	90447–19014	TUBE (L300)	1					
9	90467–160A0	CLIP	2					
10	90464–35132	CLAMP	1					
11	90445–21015	HOSE (L170)	1					
12	90467–200A4	CLIP	2					
13	90445–16019	HOSE (L160)	1					
14	90446–24M44	HOSE (L70)	1					
15	90467–141A3	CLIP	2					
16	90445–16026	HOSE (L910)	1					
17	90447–19018	TUBE (L760)	1					
18	90467–160A0	CLIP	1					
19	6EY–12577–00	HOSE 2	1					
20	90467–160A0	CLIP	2					
21	6S5–12579–00	HOSE 4	1					
22	90467–160A0	CLIP	2					
23	90445–18018	HOSE (L370)	1					
24	90467–160A0	CLIP	2					
25	6D3–12411–00	THERMOSTAT	1					
26	6EY–12413–00	COVER, THERMOSTAT	1					
27	90105–06035	BOLT, FLANGE	2					

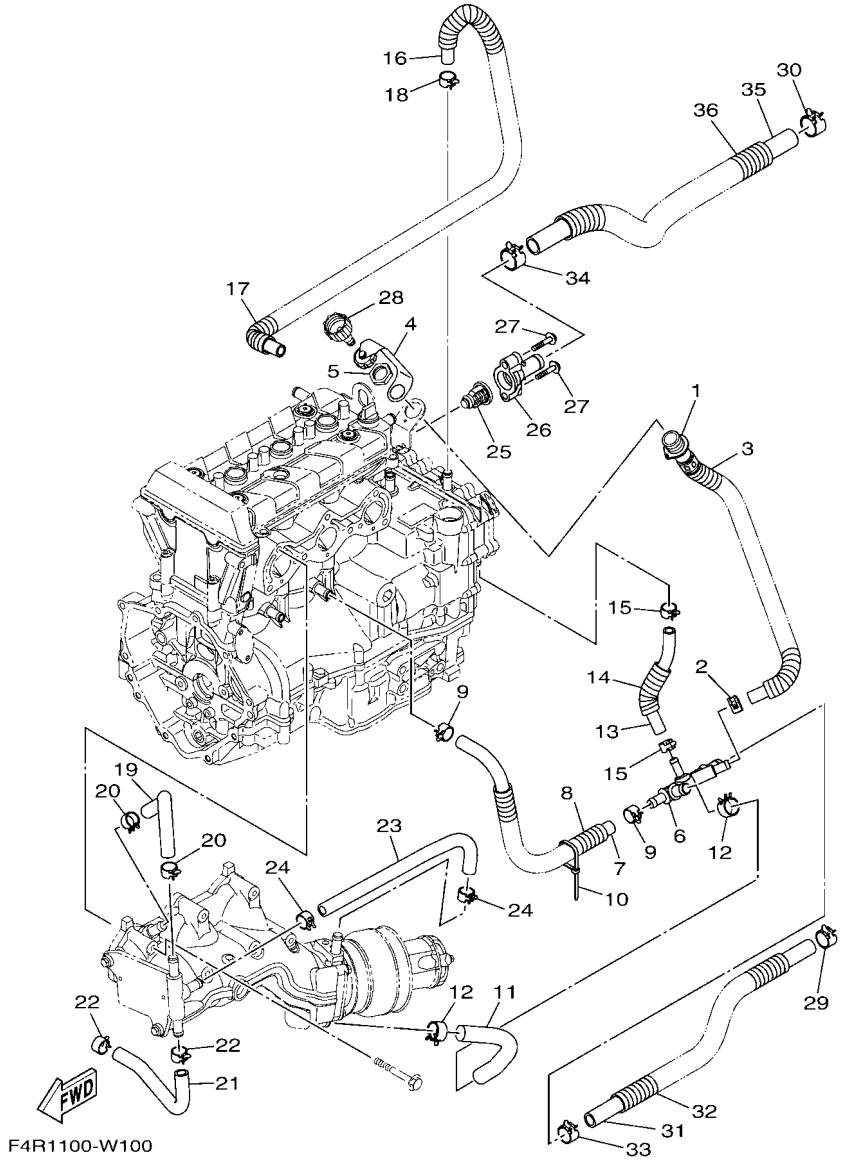

F4R1100-W100

FIG. 10 EXHAUST 2

REF. NO.	PART NO.	DESCRIPTION	F4R6					REMARKS
28	67X–12590–A0	CONDUCTION ASSY	1					FOR CAN
	67X–12590–30	CONDUCTION ASSY	1					FOR EUR
29	90465–06029	CLAMP	1					
30	90465–06030	CLAMP	1					
31	90445–21016	HOSE (L605)	1					
32	90447–22018	TUBE (L530)	1					
33	90467–200A3	CLIP	1					
34	90467–240A0	CLIP	1					
35	90445–25005	HOSE (L800)	1					
36	90447–28009	TUBE (L700)	1					

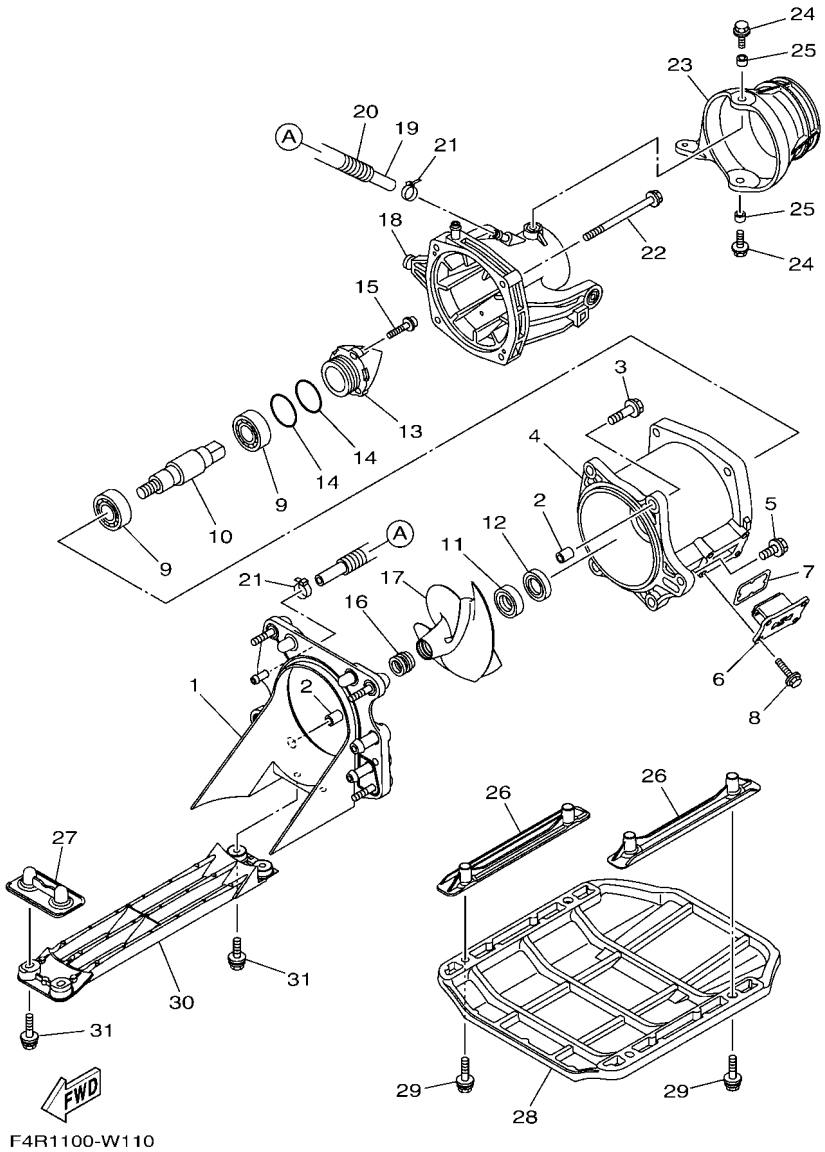

FIG. 11 JET UNIT 1

REF. NO.	PART NO.	DESCRIPTION	F4R6					REMARKS
1	6JF–G5831–00	PLATE, TRANSOM	1					
2	99590–14016	PIN, DOWEL	2					
3	90119–10819	BOLT, WITH WASHER	4					
4	6GA–R1312–02	HOUSING, IMPELLER	1					
5	90119–10066	BOLT, WITH WASHER	1					
6	6GA–G6882–00	FILTER	1					
7	6GA–G2414–00	O-RING	1					
8	90119–06889	BOLT, WITH WASHER	4					
9	93306–255X7	BEARING	2					
10	6GA–G5514–00	SHAFT, DRIVE 4	1					
11	93102–25M34	OIL SEAL	1					
12	93101–25M50	OIL SEAL	1					
13	6EX–R1326–10	CAP	1					
14	93210–44003	O-RING	2					
15	90110–06822	BOLT, HEXAGON SOCKET HEAD	3					
16	6DU–51319–00	CAP, IMPELLER	1					
17	6JF–R1321–00	IMPELLER	1					
18	6GA–R1318–00	NOZZLE	1					
19	90445–14812	HOSE (L290)	1					
20	90446–20M13	HOSE (L260)	1					
21	90465–11829	CLAMP	2					
22	90119–08881	BOLT, WITH WASHER	4					
23	6BU–R1313–00	NOZZLE, DEFLECTOR	1					
24	90119–08840	BOLT, WITH WASHER	2					
25	90387–08M06	COLLAR	2					
26	F2X–68572–A0	BRACKET 2	2					
27	F2S–68577–A0	BRACKET, 3	1					

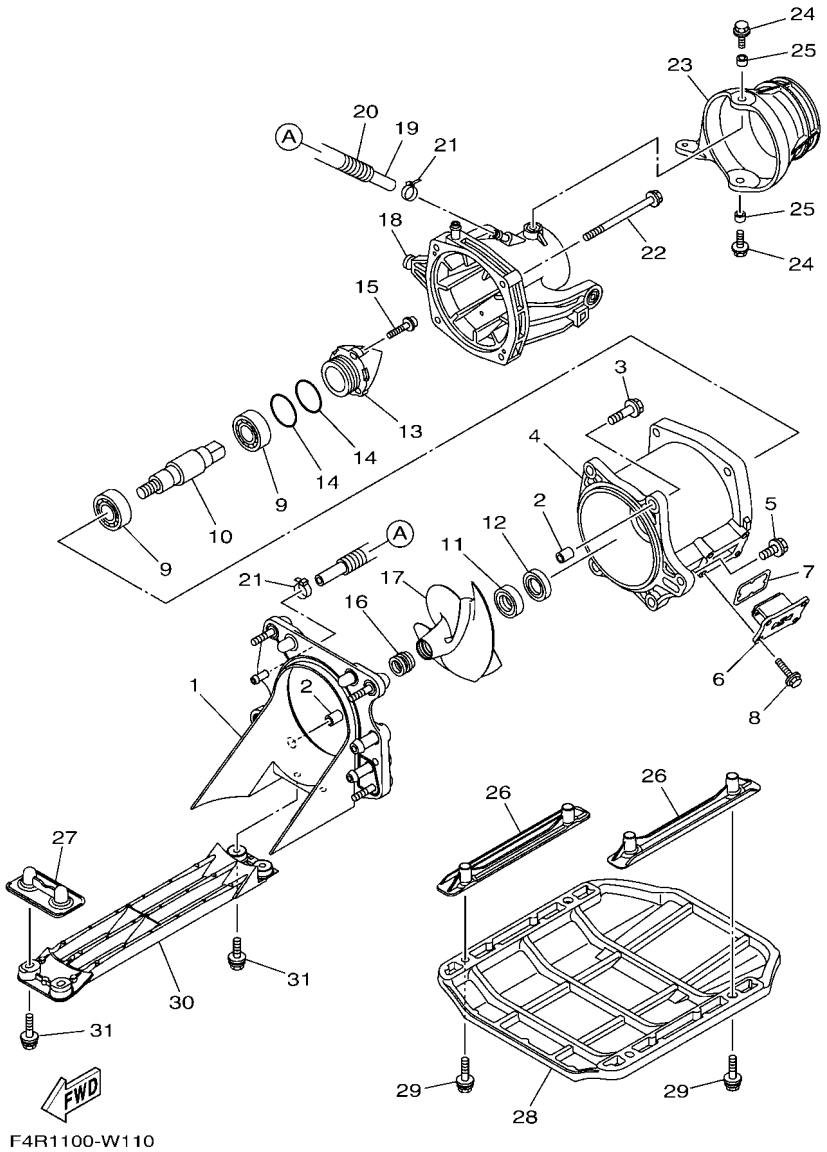

FIG. 11 JET UNIT 1

REF. NO.	PART NO.	DESCRIPTION	F4R6					REMARKS
28	F4R–6273B–00	PLATE 2	1					
29	90119–08829	BOLT, WITH WASHER	4					
30	F4R–51333–00	SCREEN, INTAKE	1					
31	90119–08038	BOLT, WITH WASHER	4					

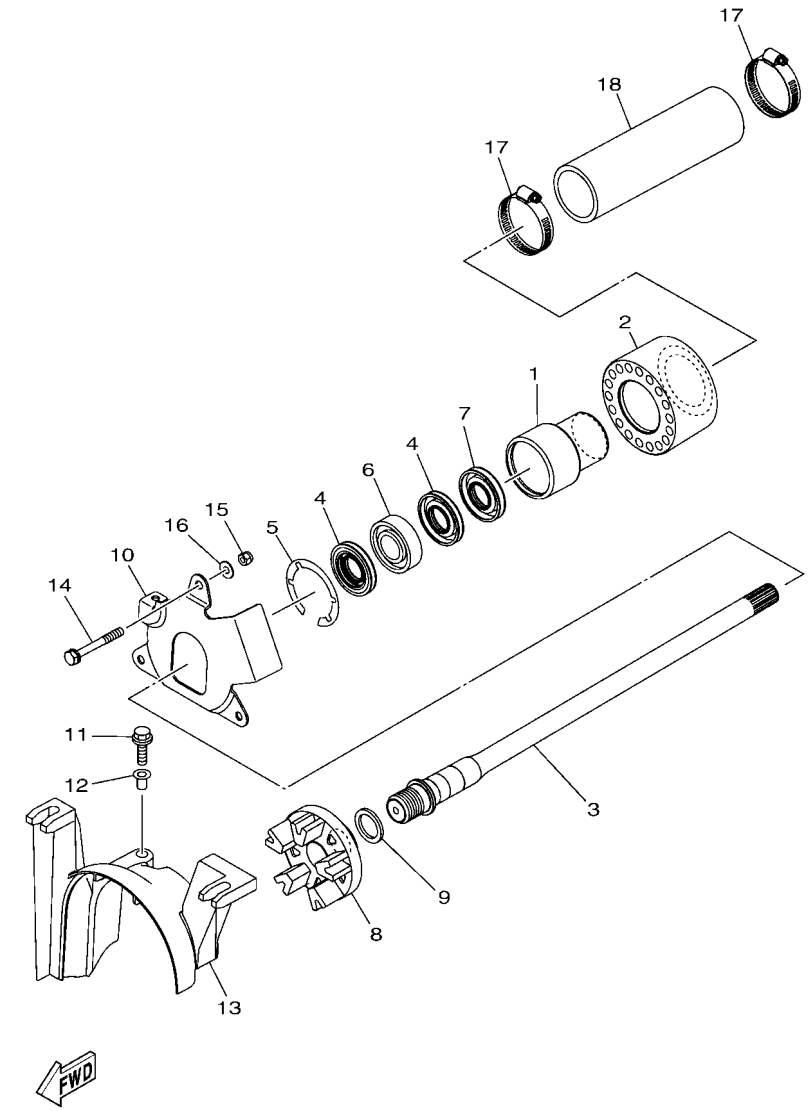

F4R1100-W120

FIG. 12 JET UNIT 2

REF. NO.	PART NO.	DESCRIPTION	F4R6					REMARKS
1	6JF–G5332–00	HOUSING, BEARING	1					
2	6GA–G5235–00	DAMPER	1					
3	6JF–G5511–00	SHAFT, DRIVE	1					
4	93101–25M55	OIL SEAL	2					
5	99009–52500	CIRCLIP	1					
6	93306–205XG	BEARING	1					
7	93101–24001	OIL SEAL	1					
8	6GA–G5593–00	FLANGE, COUPLING 1	1					
9	90201–24800	WASHER, PLATE	1					
10	6JF–G5321–00	PLATE	1					
11	97E95–06525	BOLT, HEXAGON W/W DEEP RECESS	1					
12	90387–06289	COLLAR	1					
13	6EY–51381–A0	COVER	1					
14	97E95–06550	BOLT, HEXAGON W/W DEEP RECESS	3					
15	95720–06300	NUT, SELF-LOCKING	3					
16	90201–06M62	WASHER, PLATE	3					
17	90601–15041	BAND, HOSE 50	2					
18	F4R–6883B–00	PIPE 1	1					

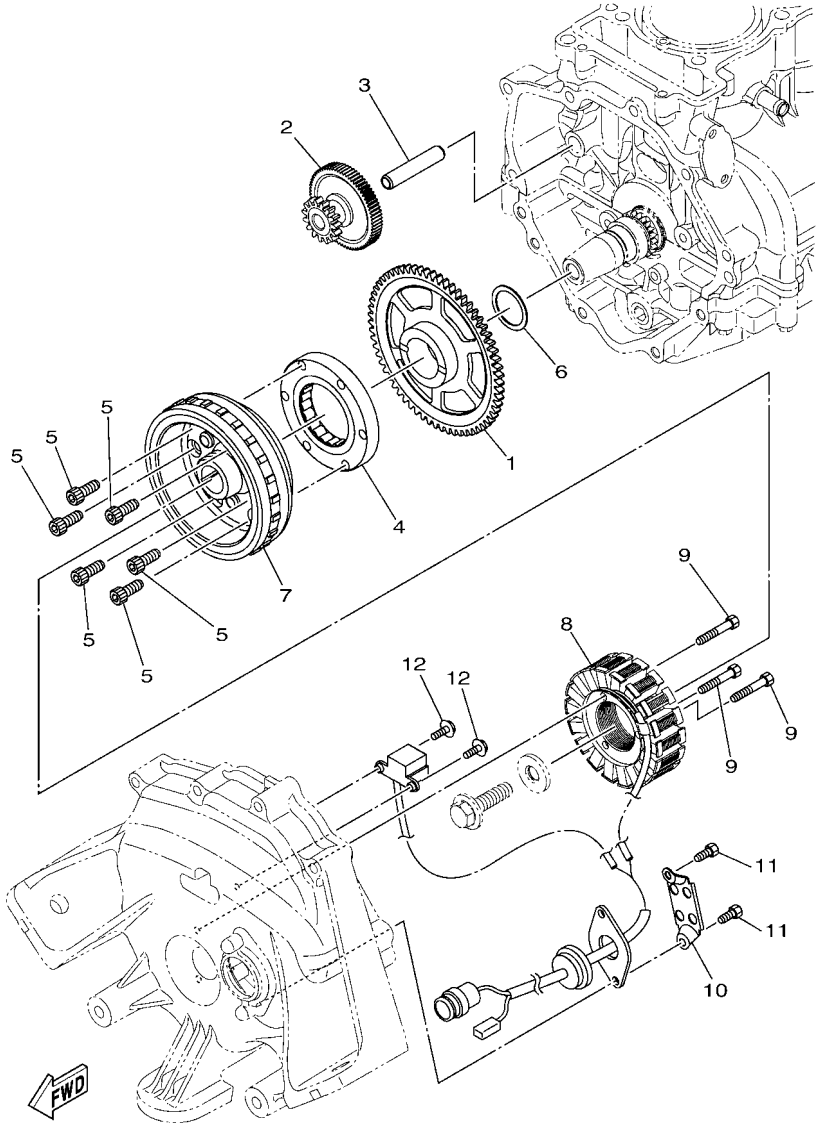

F4G1100-R140

FIG. 13 GENERATOR

REF. NO.	PART NO.	DESCRIPTION	F4R6					REMARKS
1	8FA–15515–00	GEAR 3	1					
2	2HC–15512–00	GEAR, IDLER 1	1					
3	8ES–15521–00	SHAFT 1	1					
4	6EY–15590–00	STARTER ONE-WAY ASSY	1					
5	90110–08212	BOLT, HEXAGON SOCKET HEAD	6					
6	90201–30013	WASHER, PLATE	1					
7	6EY–81450–01	ROTOR ASSY	1					
8	6EY–81410–02	STATOR ASSY	1					
9	91317–06035	BOLT, HEXAGON SOCKET HEAD	3					
10	60E–81328–00	CLAMP	1					
11	91317–06014	BOLT, HEXAGON SOCKET HEAD	2					
12	97513–05514	BOLT, WITH WASHER	2					

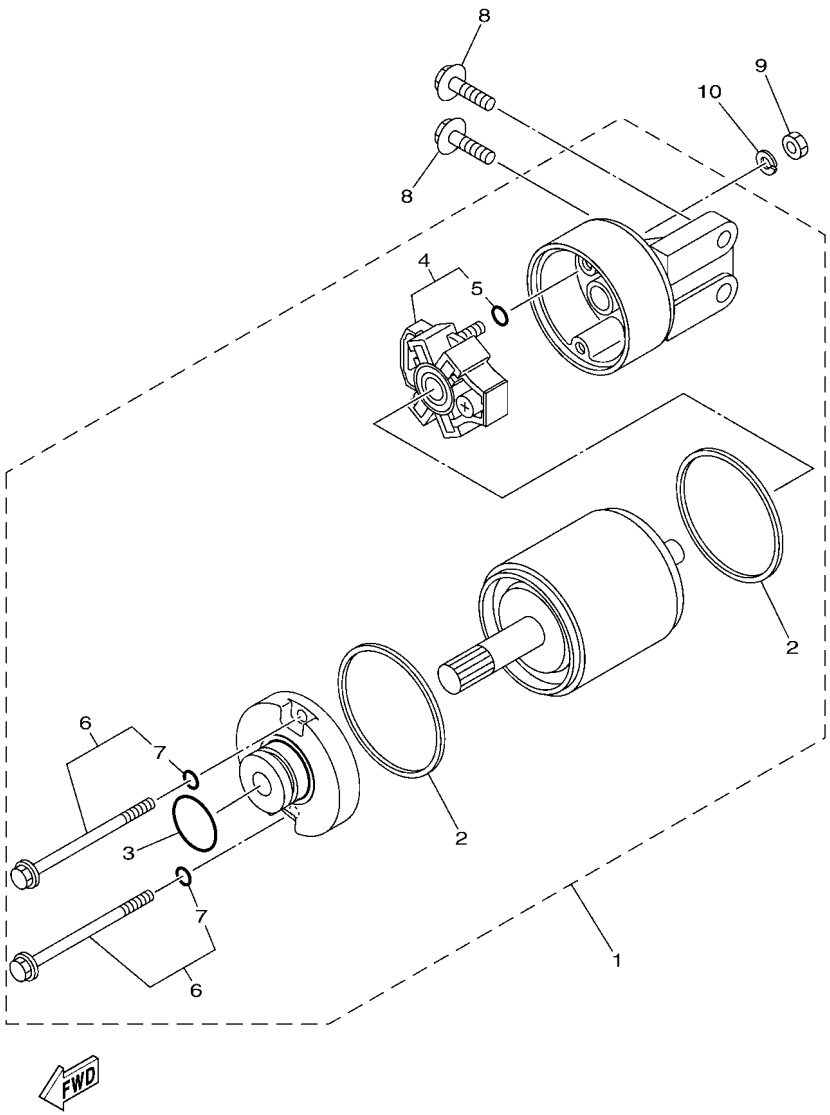

FIG. 14 STARTING MOTOR

REF. NO.	PART NO.	DESCRIPTION	F4R6					REMARKS
1	6EY–81800–00	STARTING MOTOR ASSY	1					
2	11H–81844–00	.GASKET	2					
3	1FK–81847–00	.O-RING	1					
4	6EY–81840–00	.BRUSH HOLDER ASSY	1					
5	3TB–81847–00	..O-RING	1					
6	6EY–81826–00	.BOLT	2					
7	3TB–81847–00	..O-RING	1					
8	97513–08530	BOLT, WITH WASHER	2					
9	95380–06700	NUT	1					
10	92990–06100	WASHER, SPRING	1					

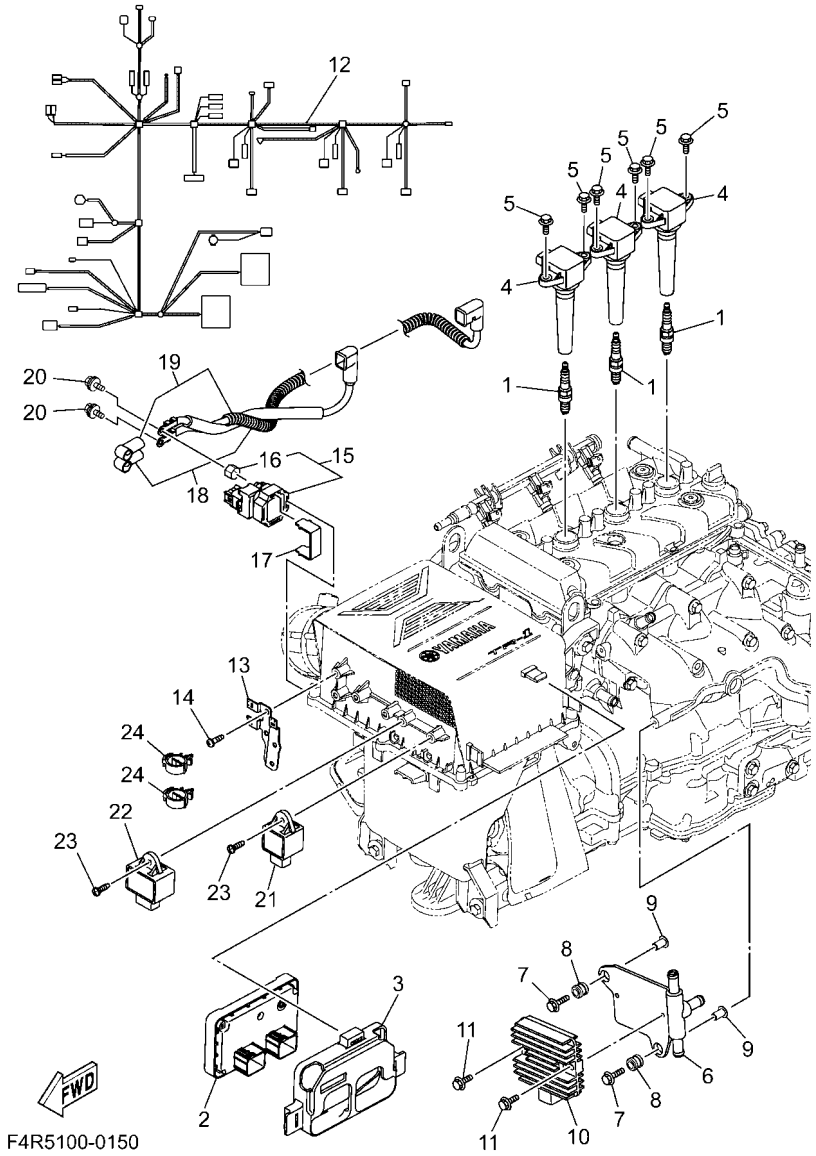

FIG. 15 ELECTRICAL 1

REF. NO.	PART NO.	DESCRIPTION	F4R6					REMARKS
1	94702–00409	PLUG, SPARK (NGK CR9EB)	3					
2	6JF–8591A–00	ENGINE CONTROL UNIT ASSY	1					
3	6EY–8591S–00	GROMMET, ECU	1					
4	6EX–82310–02	IGNITION COIL ASSY	3					
5	95880–06016	BOLT, FLANGE	6					
6	6EY–81975–00	PLATE, RECTIFIER FITTING	1					
7	90119–06311	BOLT, WITH WASHER	2					
8	6A0–82317–01	DAMPER, IGNITION COIL	2					
9	90387–06119	COLLAR	2					
10	6D3–81960–01	RECTIFIER & REGULATOR ASSY	1					
11	95814–06020	BOLT, FLANGE	2					
12	6JF–8259L–01	WIRE HARNESS ASSY 1	1					
13	6JF–82153–01	STAY, FUSE HOLDER	1					
14	97780–60516	SCREW, TAPPING	2					
15	6EY–81940–09	STARTER RELAY ASSY	1					
16	6EY–82355–00	.GROMMET	1					
17	6EY–81953–00	STAY, RELAY	1					
18	6GA–82115–01	WIRE, PLUS LEAD	1					
19	6EY–82117–00	WIRE, LEAD	1					
20	97E95–06612	BOLT, HEXAGON W/W DEEP RECESS	2					
21	60E–81950–00	RELAY ASSY	1					
22	68V–81950–00	RELAY ASSY	1					
23	97780–60520	SCREW, TAPPING	2					
24	90464–18246	CLAMP	2					

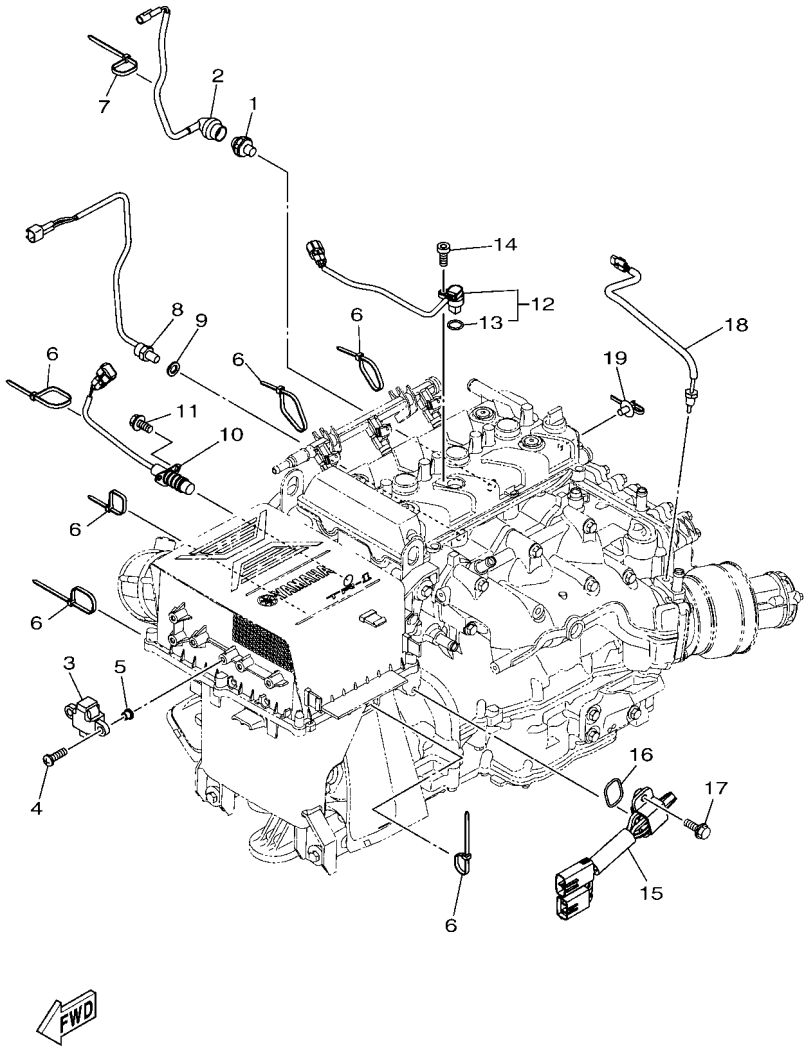

F4R1100-W160

FIG. 16 ELECTRICAL 2

REF. NO.	PART NO.	DESCRIPTION	F4R6					REMARKS
1	68V–82504–00	OIL PRESSURE SWITCH ASSY	1					
2	60E–81315–01	LEAD WIRE ASSY	1					
3	6ET–82576–00	SENSOR, LEAN ANGLE	1					
4	97780–60025	SCREW, TAPPING	2					
5	90387–06M05	COLLAR	2					
6	90464–35132	CLAMP	6					
7	90465–13M39	CLAMP	1					
8	61A–85790–01	THERMOSENSOR ASSY	1					
9	92990–10600	WASHER, PLATE	1					
10	6CR–82560–00	THERMO SWITCH ASSY	1					
11	97E95–06520	BOLT, HEXAGON W/W DEEP RECESS	2					
12	2S3–85896–02	SENSOR, CAM POSITION	1					
13	4D9–81168–00	.O-RING	1					
14	91380–06016	BOLT	1					
15	6CS–8273J–11	EARTH PLATE COMP.	1					
16	93210–32172	O-RING	1					
17	90119–06MA3	BOLT, WITH WASHER	2					
18	6DE–85790–00	THERMOSENSOR ASSY	1					
19	90464–20005	CLAMP	1					

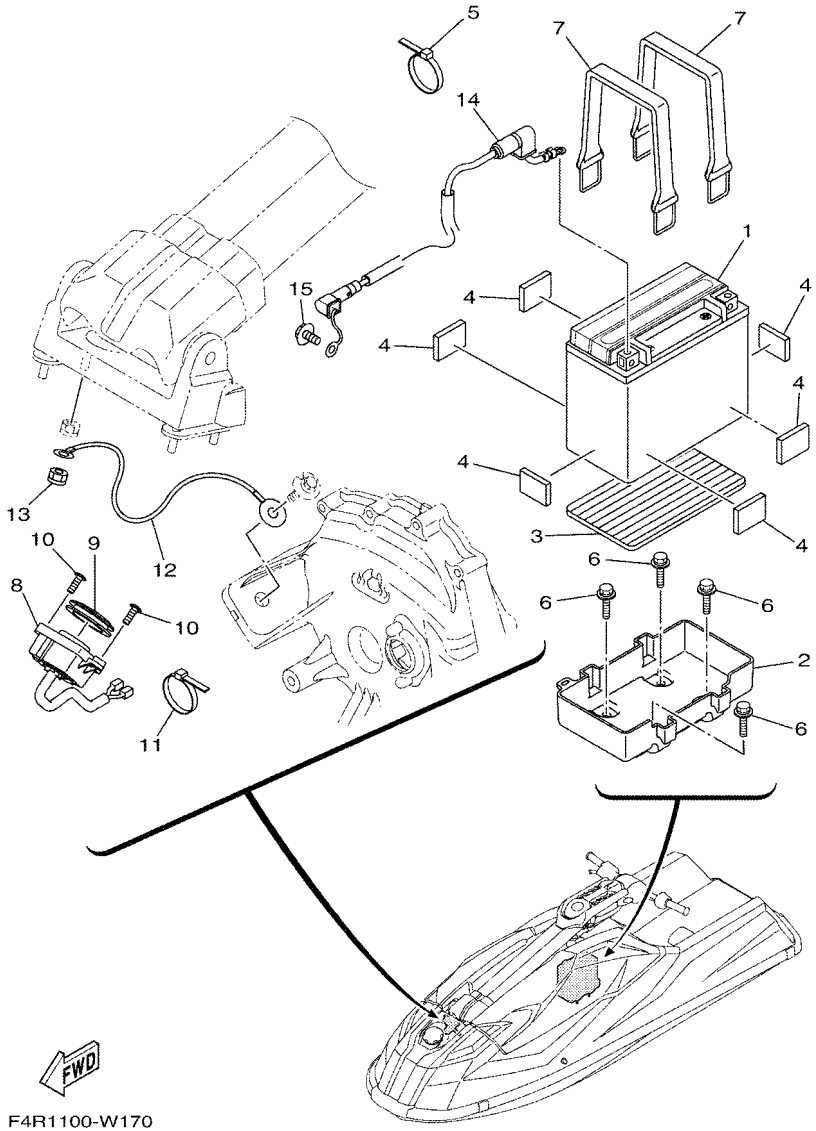

FIG. 17 ELECTRICAL 3

REF. NO.	PART NO.	DESCRIPTION	F4R6					REMARKS
1	F4R–68217–01	BATTERY (YTX20L-BS)	1					
2	F4R–68211–00	CASE, BATTERY	1					
3	F4R–68221–00	PAD, BATTERY	1					
4	EU0–68221–30	PAD, BATTERY 2	6					
5	90601–20006	BAND	1					
6	90119–06309	BOLT, WITH WASHER	4					
7	EU0–68218–04	BAND, BATTERY	2					
8	F4R–6820A–00	METER ASSY	1					
9	F4R–68244–00	PACKING	1					
10	90111–06049	BOLT, HEXAGON SOCKET BUTTON	2					
11	90601–20006	BAND	1					
12	F4R–82149–00	WIRE, LEAD 3	1					
13	95720–08300	NUT, SELF-LOCKING	1					
14	6GA–82116–00	WIRE, MINUS LEAD	1					
15	97513–08514	BOLT, WITH WASHER	1					

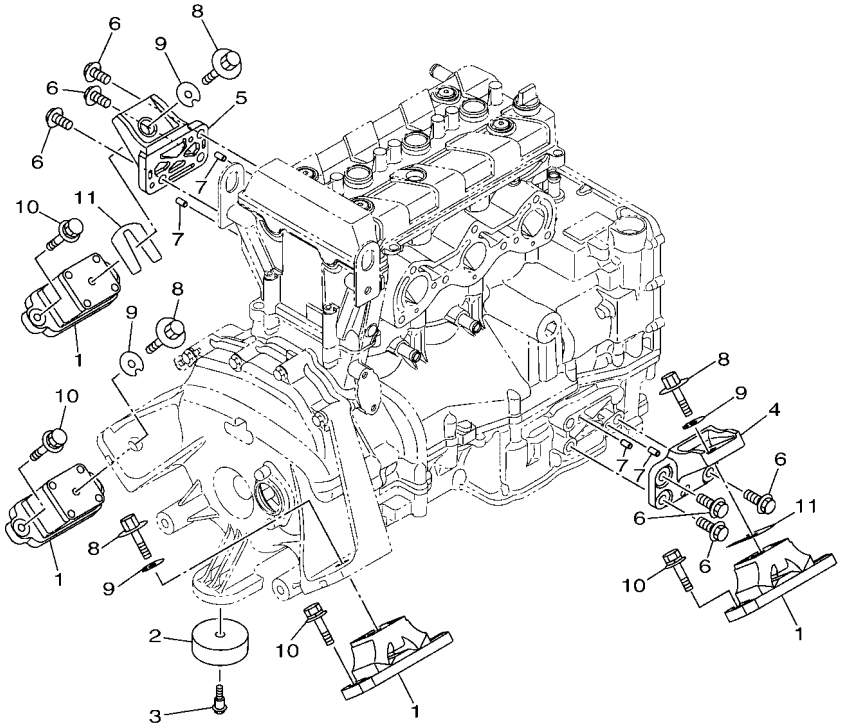

F4R1100-W180

FIG. 18 ENGINE MOUNT

REF. NO.	PART NO.	DESCRIPTION	F4R6					REMARKS
1	6GA–44517–00	MOUNT RUBBER	4					
2	6EY–44574–00	STOPPER, LOWER MOUNT RUBBER	1					
3	90109–06M92	BOLT	1					
4	6EY–41661–10	BRACKET 1	1					
5	6EY–41662–00	BRACKET 2	1					
6	90105–10M49	BOLT, FLANGE	6					
7	93606–12019	PIN, DOWEL	4					
8	90119–08904	BOLT, WITH WASHER	4					
9	EU0–67324–00	PLATE	4					
10	90119–08904	BOLT, WITH WASHER	8					
11	EU0–67354–C0	SHIM (T=0.5)	4					UN
	EU0–67354–D0	SHIM (T=1.0)	4					UN

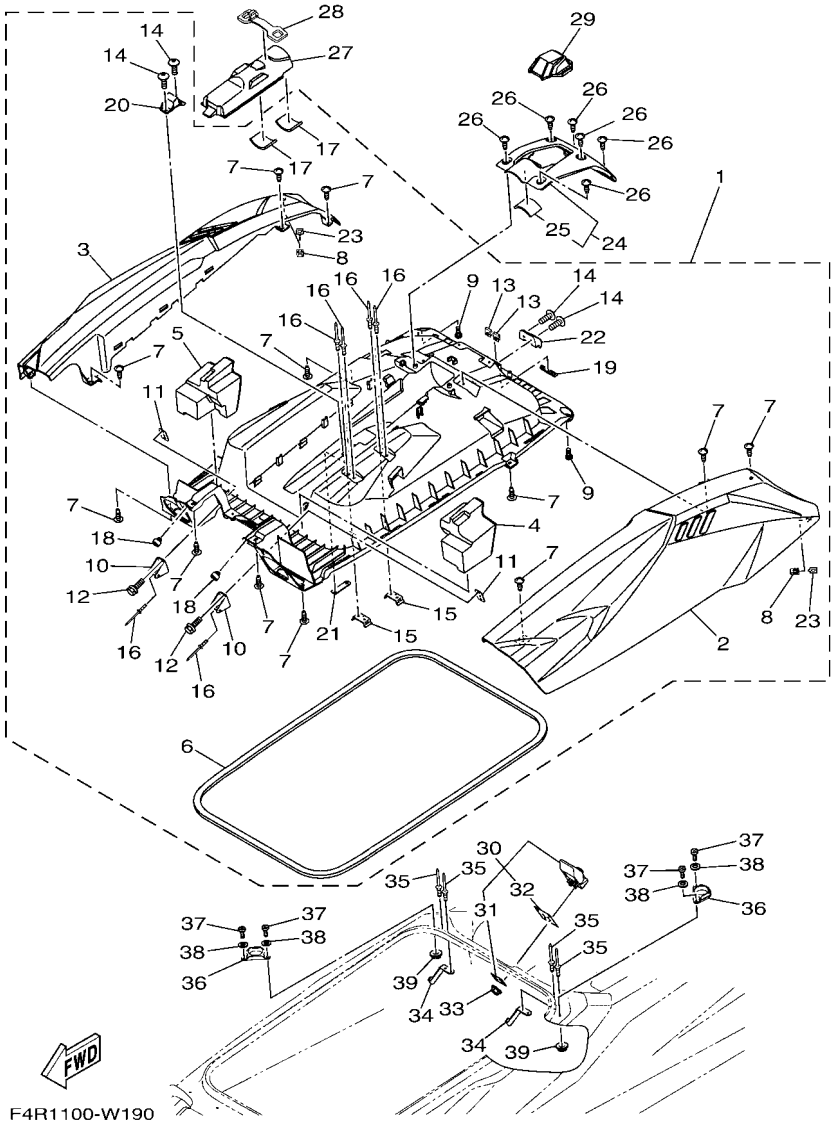

FIG. 19 ENGINE HATCH

REF. NO.	PART NO.	DESCRIPTION	F4R6					REMARKS
1	F4R–6517A–00–P0	ENGINE ROOM HATCH ASSY	1					
2	F4R–65161–00–P0	.HATCH,ENGINE ROOM 1	1					
3	F4R–65171–00–P0	.LID, ENGINE HATCH	1					
4	F4R–6514G–00	.FLOTATION, HATCH 1	1					
5	F4R–6514H–00	.FLOTATION, HATCH 2	1					
6	F4R–62664–01	.PACKING	1					
7	97780–50016	.SCREW, TAPPING	12					
8	90183–051A5	.NUT, SPRING	2					
9	90109–05M89	.BOLT	2					
10	F4R–65136–00	.STOPPER, HATCH 2	2					
11	F4R–65137–00	.PLATE, HATCH STOPPER	2					
12	90119–06281	.BOLT, WITH WASHER	4					
13	90183–06902	.NUT, SPRING	2					
14	90111–06049	.BOLT, HEXAGON SOCKET BUTTON	4					
15	GM6–64256–00	.CLAMP	2					
16	90267–48941	.RIVET, BLIND	6					
17	F4R–6517M–00	.PAD,HATCH 1	2					
18	4N0–27114–00	.STOPPER, MAIN STAND	2					
19	GM6–6516C–00	.TRIM 1	1					
20	F4R–65157–00	.STOPPER	1					
21	F4R–65193–00	.PLATE	1					
22	F4R–65372–00	.BRACKET	1					
23	F4R–65175–00	.PLATE, FIX	2					
24	F4R–6516M–00	ENGINE HATCH COVER COMP.	1					
25	F4R–6517M–00	.PAD,HATCH 1	1					
26	90149–05937	SCREW	6					
27	F4R–6516W–00	COVER	1					

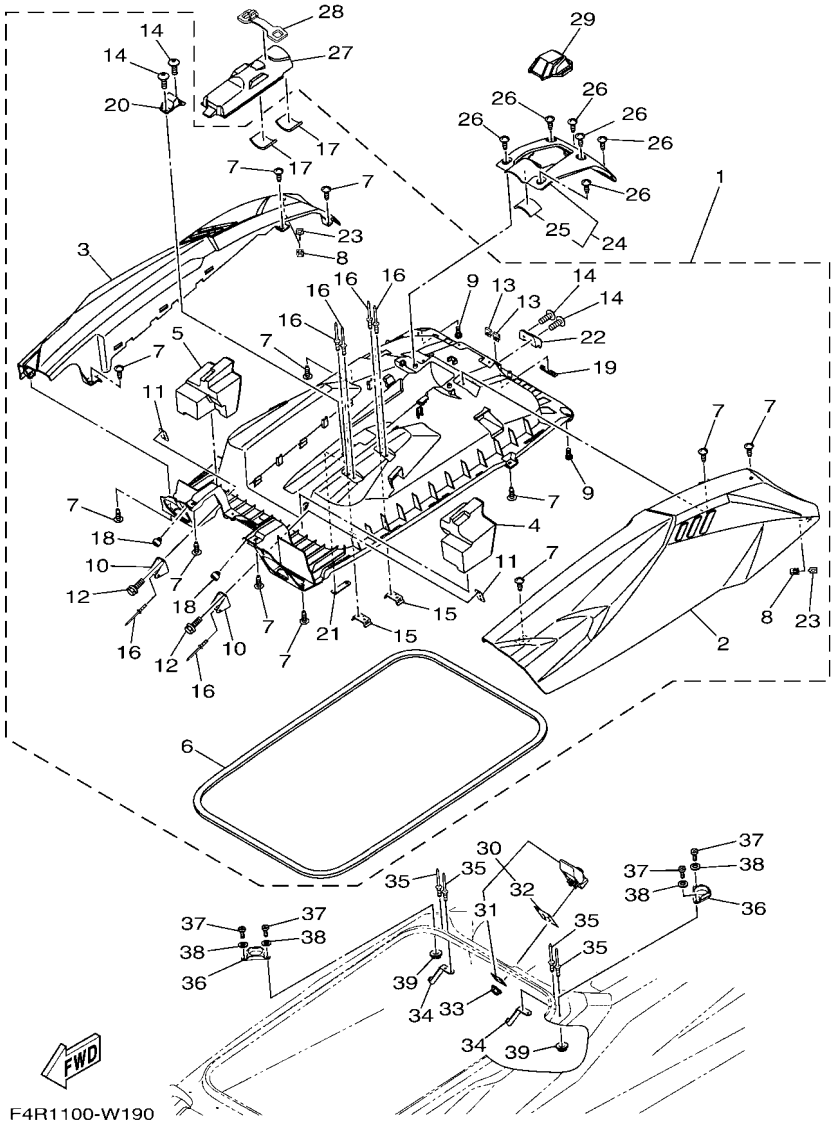

FIG. 19 ENGINE HATCH

REF. NO.	PART NO.	DESCRIPTION	F4R6					REMARKS
28	F4R–65191–00	BAND, BOARDING LADDER	1					
29	F4R–6514B–00	DAMPER, POLE	1					
30	F4R–62840–01	HATCH LOCK ASSY. 2	1					
31	EW2–62846–00	.PLATE, HATCH LOCK	1					
32	F4R–6284E–00	.PACKING, HATCH LOCK	1					
33	95720–05300	NUT, FLANGE	4					
34	F4R–6756C–00	HOOK C	2					
35	90267–48930	RIVET, SEALD	4					
36	F4R–6514M–00	PROTECTOR 1	2					
37	90149–05960	SCREW	4					
38	92990–05200	WASHER, PLAIN	4					
39	95720–05300	NUT, FLANGE	4					

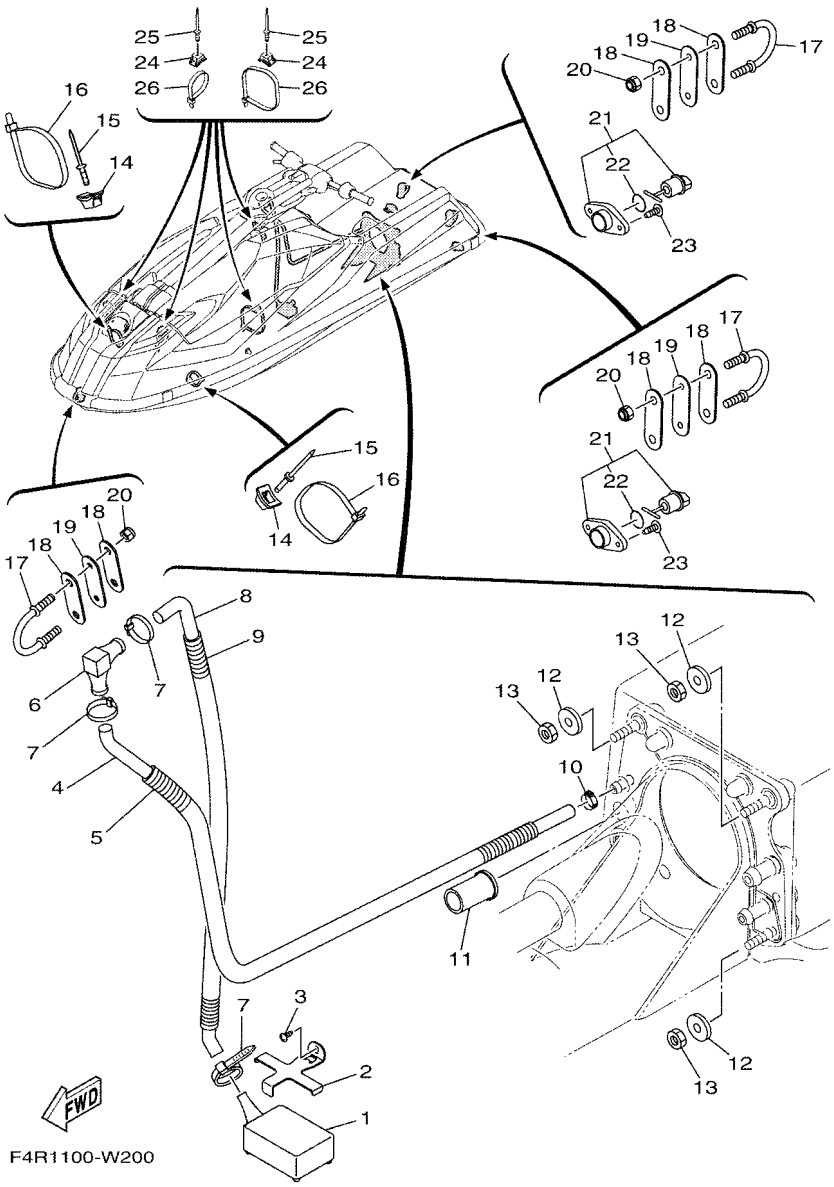

FIG. 20 HULL & DECK

REF. NO.	PART NO.	DESCRIPTION	F4R6					REMARKS
1	F4R–6761D–00	STRAINER, BILGE	1					
2	F4R–67618–00	BASE	1					
3	97780–50114	SCREW, PAN HEAD TAPPING	1					
4	90445–14M18	HOSE (L560)	1					
5	90446–20M65	HOSE (L445)	1					
6	6K8–51162–00	JOINT, HOSE	1					
7	90465–13M11	CLAMP	3					
8	90445–14M26	HOSE (L880)	1					
9	90446–20M70	HOSE (L800)	1					
10	90465–06028	CLAMP	1					
11	F4R–67772–00	NUT, JOINT	1					
12	90201–10060	WASHER, PLATE	4					
13	95720–10300	NUT	4					
14	90600–91736	CLAMP COMP.	2					
15	90267–48930	RIVET, SEALD	2					
16	90601–20016	BAND	2					
17	F2N–61628–A1	STERN EYE	3					
18	F3D–64953–00	PLATE A	6					
19	F4R–61653–00	PACKING	3					
20	95720–08300	NUT, SELF-LOCKING	6					
21	F4R–62280–00	DRAIN PLUG ASSY.	2					
22	EU0–62283–00	.O-RING	1					
23	97780–50514	SCREW, TAPPING	4					
24	90600–91736	CLAMP COMP.	5					
25	90267–48930	RIVET, SEALD	5					
26	90601–20006	BAND	5					

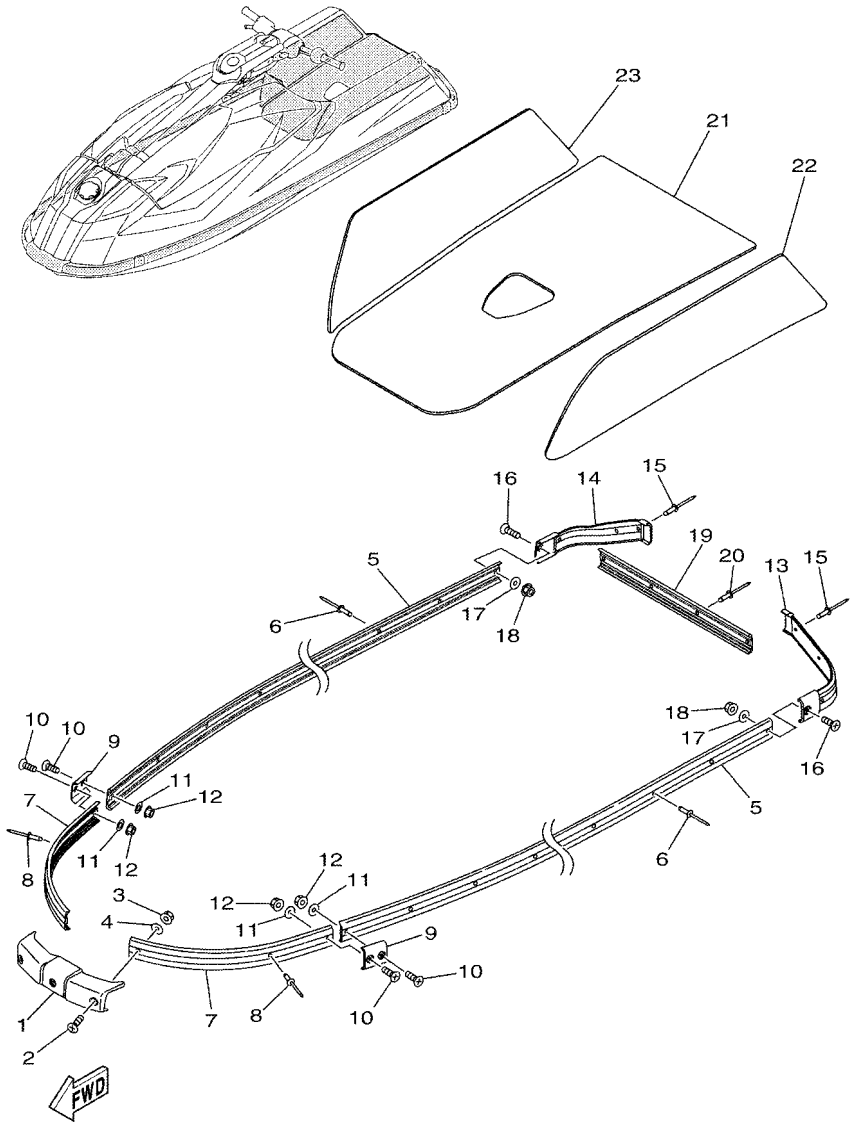

F4R1100-W210

FIG. 21 GUNWALE & MAT

REF. NO.	PART NO.	DESCRIPTION	F4R6					REMARKS
1	F4R–62511–00	GUNWALE, BOW	1					BLACK
2	90149–05960	SCREW	3					
3	92990–05200	WASHER, PLAIN	3					
4	95720–05300	NUT, FLANGE	3					
5	F2F–62552–00	GUNWALE, SIDE 1	2					BLACK
6	90267–48949	RIVET, BLIND	22					
7	F4R–6252C–00	COVER, GUNWALE 1	2					BLACK
8	90267–48949	RIVET, BLIND	4					
9	F4R–6252A–00	JOINT,GUNWALE	2					BLACK
10	90149–05960	SCREW	4					
11	92990–05200	WASHER, PLAIN	4					
12	95720–05300	NUT, FLANGE	4					
13	F4R–6251D–00	GUNWALE, STERN 1	1					BLACK
14	F4R–6251E–00	GUNWALE, STERN 2	1					BLACK
15	90267–48949	RIVET, BLIND	6					
16	90149–05960	SCREW	2					
17	92990–05200	WASHER, PLAIN	2					
18	95720–05300	NUT, FLANGE	2					
19	F4R–6252C–00	COVER, GUNWALE 1	1					BLACK
20	90267–48949	RIVET, BLIND	4					
21	F4R–6351B–00	MAT,LOWER	1					
22	F4R–6351C–10	MAT, SIDE 1	1					BLACK
23	F4R–6351D–10	MAT,SIDE 2	1					BLACK

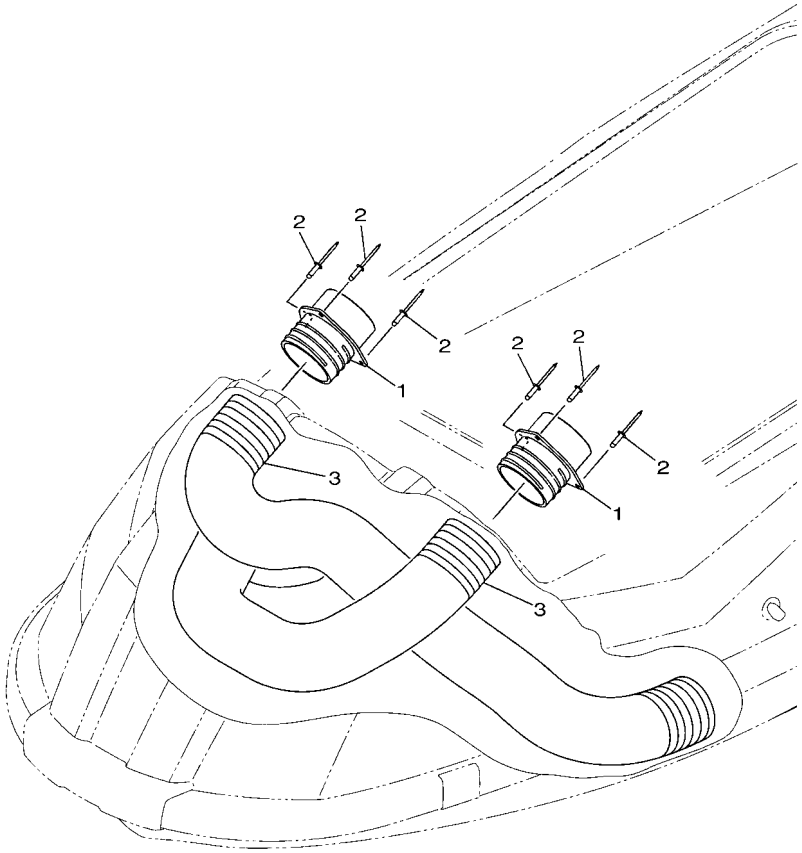

F4R1100-W220

FIG. 22 VENTILATION

REF. NO.	PART NO.	DESCRIPTION	F4R6					REMARKS
1	F4R–62127–01	BASE, AIR INTAKE	2					
2	90267–48930	RIVET, SEALD	6					
3	F4R–6213G–00	HOSE, VENTILATOR 2	2					

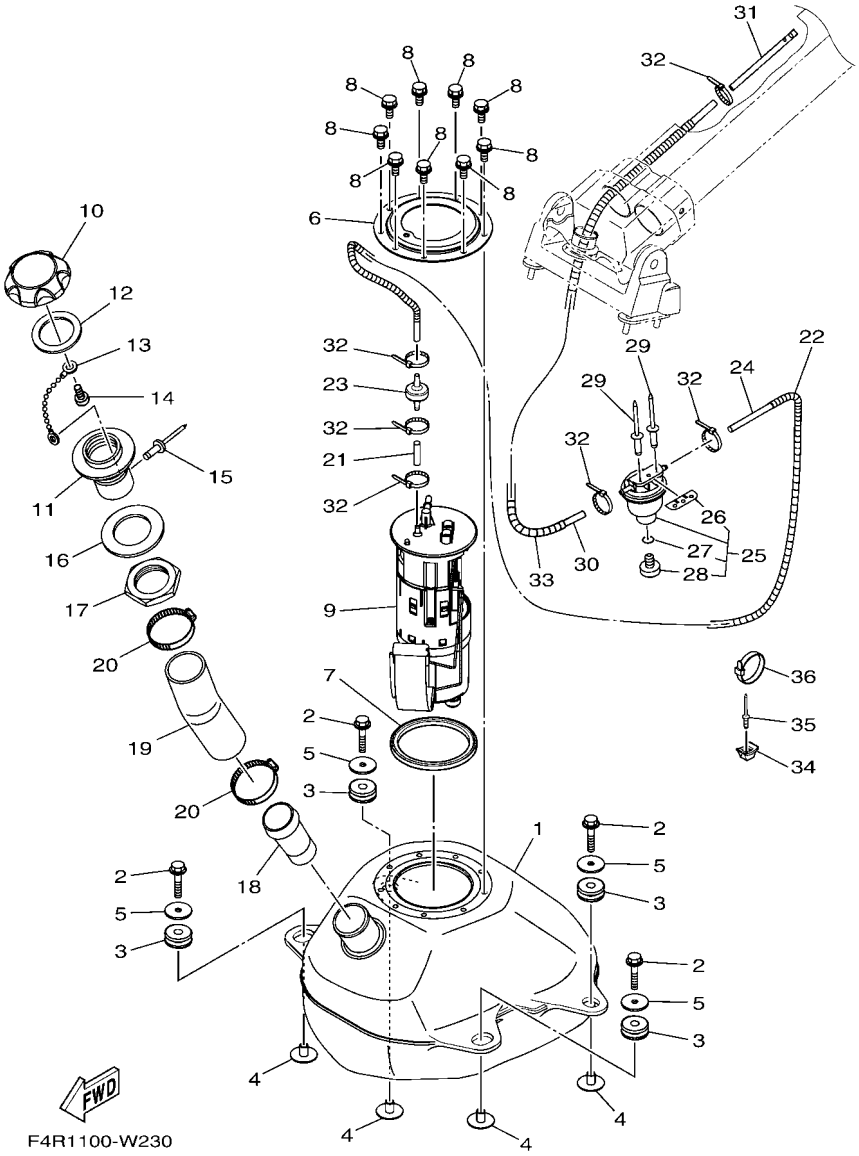

FIG. 23 FUEL TANK

REF. NO.	PART NO.	DESCRIPTION	F4R6					REMARKS
1	F4R–67711–00	TANK, FUEL	1					
2	90119–08904	BOLT, WITH WASHER	4					
3	F4R–61338–00	GROMMET	4					
4	F4R–67278–00	COLLER	4					
5	90201–08MA4	WASHER, PLATE	4					
6	F4R–67773–00	RING	1					
7	F1B–67747–00	PACKING, SEAL	1					
8	95880–06010	BOLT, FLANGE	9					
9	F4R–13907–01	FUEL PUMP COMP.	1					
10	F2N–U7831–10	CAP, FUEL FILLER	1					BLACK
11	GP7–U7833–11	SOCKET	1					BLACK
12	GP7–U7832–01	PACKING	1					
13	GP7–U7835–00	CHAIN BALL	1					
14	90169–049U1	SCREW, TRUSS HEAD TAPPING	1					
15	90267–329UR	RIVET, BLIND	1					
16	GP7–U7834–00	PACKING FUEL FILLER	1					
17	GP7–6783F–A0	NUT, FUEL FILLER	1					
18	F4R–6773D–00	TUBE	1					
19	F4R–67844–00	HOSE	1					
20	90601–15573	BAND, HOSE 55	2					
21	F4R–6785H–00	HOSE, AIR VENT 3	1					
22	90446–14M64	HOSE (L560)	1					
23	F3Y–67767–A0	CHECK VALVE	1					
24	F4R–67856–00	HOSE, AIR VENT 3	1					
25	F2F–6214A–00	FILTER, VENT ASSY	1					
26	EW2–62142–00	.PLATE, FILTER	1					
27	70R–24543–00	.PLUG, DRAIN	1					

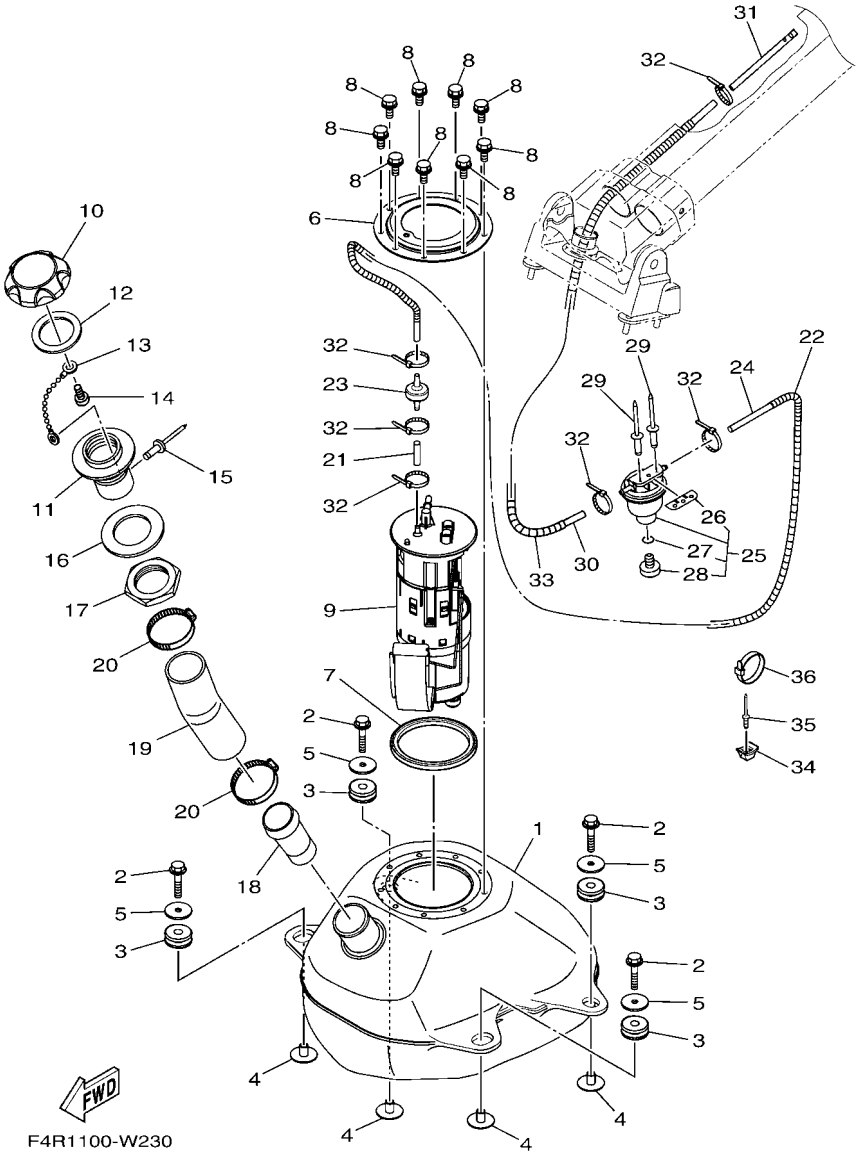

FIG. 23 FUEL TANK

REF. NO.	PART NO.	DESCRIPTION	F4R6					REMARKS
28	70R–24489–00	.O-RING	1					
29	90267–48949	RIVET, BLIND	2					
30	F4R–6785G–00	HOSE, AIR VENT	1					
31	EW2–62149–31	PIPE VENTILATION 2	1					
32	90465–11M10	CLAMP	6					
33	90446–14M23	HOSE (L180)	1					
34	90600–91736	CLAMP COMP.	1					
35	90267–48930	RIVET, SEALD	1					
36	90601–20006	BAND	1					

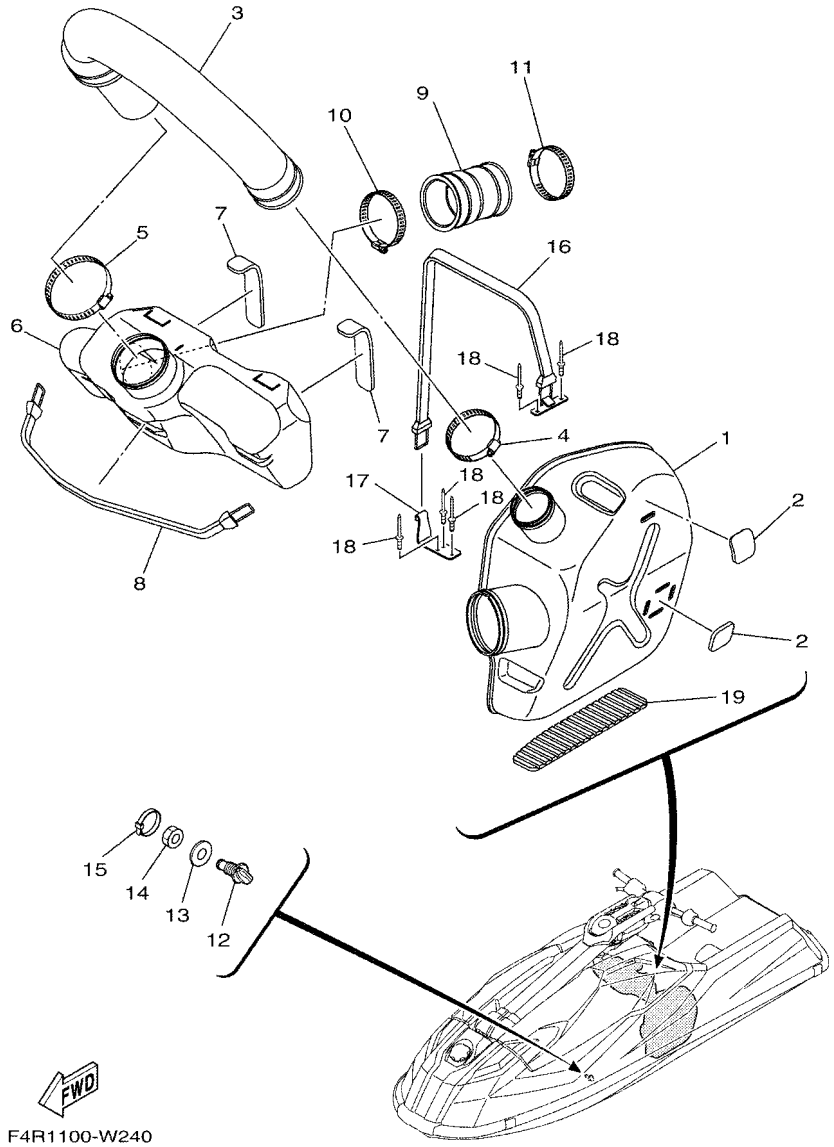

FIG. 24 EXHAUST 3

REF. NO.	PART NO.	DESCRIPTION	F4R6					REMARKS
1	F4R–67550–00	WATER LOCK COMP.	1					
2	F4R–6755J–00	MAT,WATER LOCK	2					
3	F4R–67555–00	HOSE, EXHAUST	1					
4	90601–17586	BAND, HOSE 75	1					
5	90601–19584	BAND, HOSE 95	1					
6	F4R–64261–01	TANK, WATER	1					
7	F4R–6759E–00	MAT 4	2					
8	EW2–67821–00	BAND, FUEL TANK	1					
9	F4R–6758D–00	HOSE,EXHAUST 3	1					
10	90601–17586	BAND, HOSE 75	1					
11	90601–17586	BAND, HOSE 75	1					
12	F4V–6753B–A0	PILOT, WATER	1					
13	F1B–67564–00	GASKET	1					
14	F0X–62733–00	NUT	1					
15	90467–150A5	CLIP	1					
16	F4R–6577C–00	HOOK A	1					
17	F4R–6576B–00	HOOK B	1					
18	90267–48930	RIVET, SEALD	5					
19	F4R–63844–00	MAT	1					

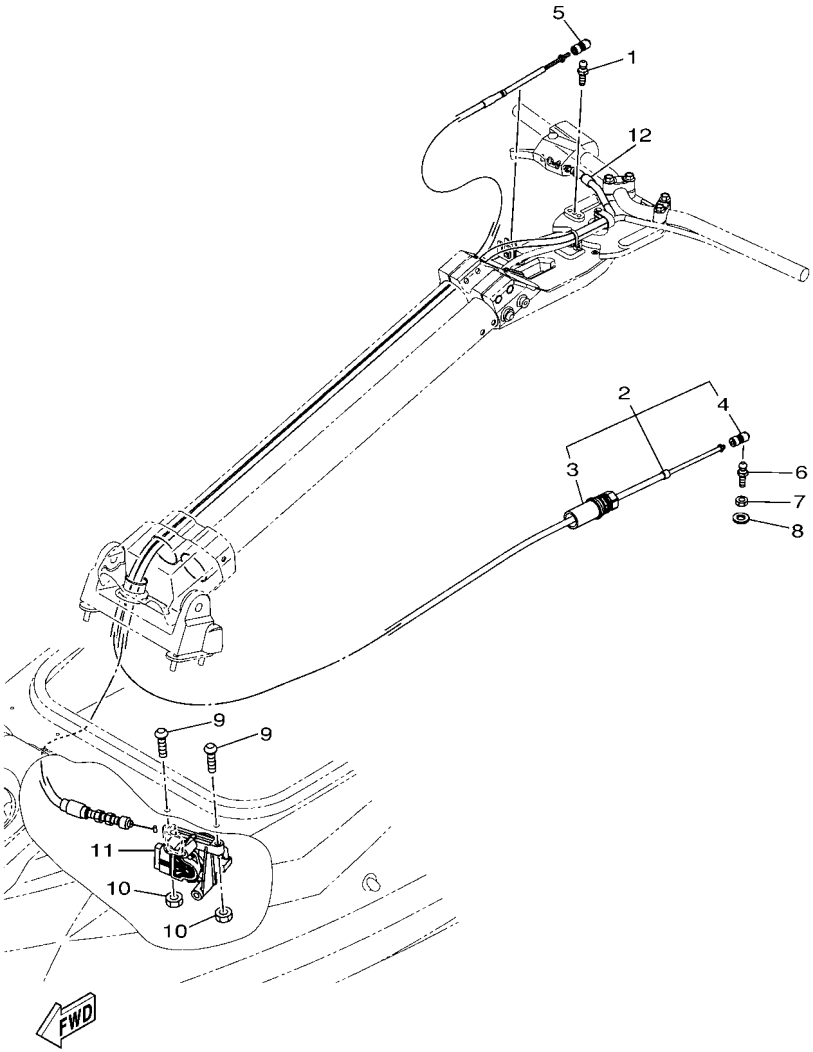

F4R1100-W250

FIG. 25 CONTROL CABLE

REF. NO.	PART NO.	DESCRIPTION	F4R6					REMARKS
1	EU0–61461–02	STUD, JOINT BALL	1					
2	F4R–61481–01	CABLE, STEERING	1					
3	GK5–67267–10	.CONNECTOR, CABLE	1					
4	F2N–61460–00	.BALL JOINT ASSY	1					
5	EU0–61461–30	SHAFT, JOINT BALL	1					
6	EU0–61461–02	STUD, JOINT BALL	1					
7	90201–06906	WASHER, PLATE	2					
8	95380–06700	NUT	1					
9	90111–08023	BOLT, HEXAGON SOCKET BUTTON	2					
10	95720–08300	NUT, SELF-LOCKING	2					
11	6JF–14305–00	THROTTLE LEVER COMP	1					
12	6JF–26311–00	WIRE, THROTTLE 1	1					

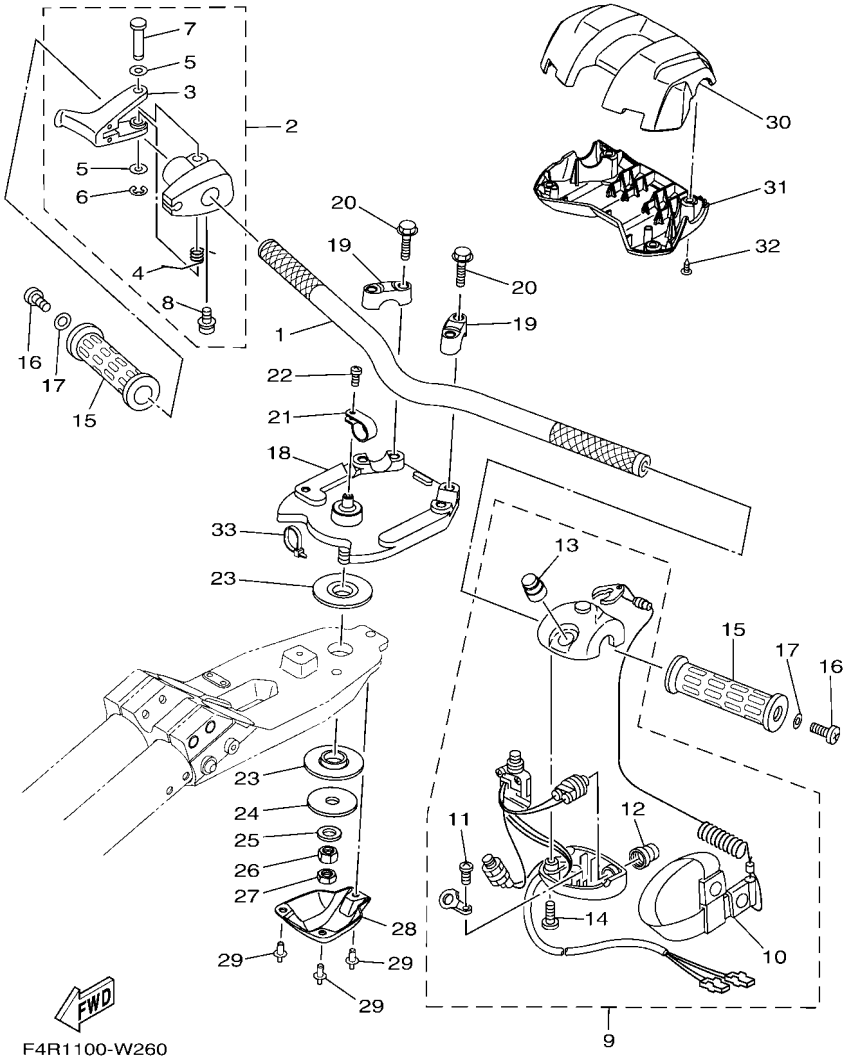

F4R1100-W260

FIG. 26 STEERING 1

REF. NO.	PART NO.	DESCRIPTION	F4R6					REMARKS
1	F4R–61552–10	HANDLE	1					
2	F0D–67250–10	THROTTLE LEVER ASSY	1					
3	F0D–67255–02	.LEVER, THROTTLE	1					
4	EW2–67256–00	.SPRING	1					
5	EW2–67258–01	.WASHER	2					
6	EW2–67259–01	.E-RING	1					
7	F0D–67257–00	.SHAFT	1					
8	F1X–6725F–01	.BOLT, THROTTLE	2					
9	F4R–68310–00	SWITCH BOX ASSY	1					
10	EW2–68348–00	.LANYARD, STOP SWITCH	1					
11	97880–03008	.SCREW, PAN HEAD	2					
12	FK7–68312–02	.STOP BUTTON COMP	1					
13	FK7–68313–02	.START BUTTON COMP.	1					
14	97880–05025	.SCREW, PAN HEAD	2					
15	EW2–61553–00	GRIP, HANDLE 1	2					
16	90149–05959	SCREW	2					
17	90201–05928	WASHER, PLATE	2					
18	F4R–61541–00	COLUMN, STEERING	1					
19	EU0–23814–32	HOLDER, HANDLE UPPER	2					
20	90105–08902	BOLT, FLANGE	4					
21	90600–91728	CLIP, NYLON 17	1					
22	98980–04010	SCREW, BIND	1					
23	EW2–61417–00	BEARING, COLUMN	2					
24	EW2–61419–00	WASHER, STEERING	1					
25	92990–12200	WASHER, PLAIN	1					
26	95380–12600	NUT	1					
27	95380–12700	NUT	1					

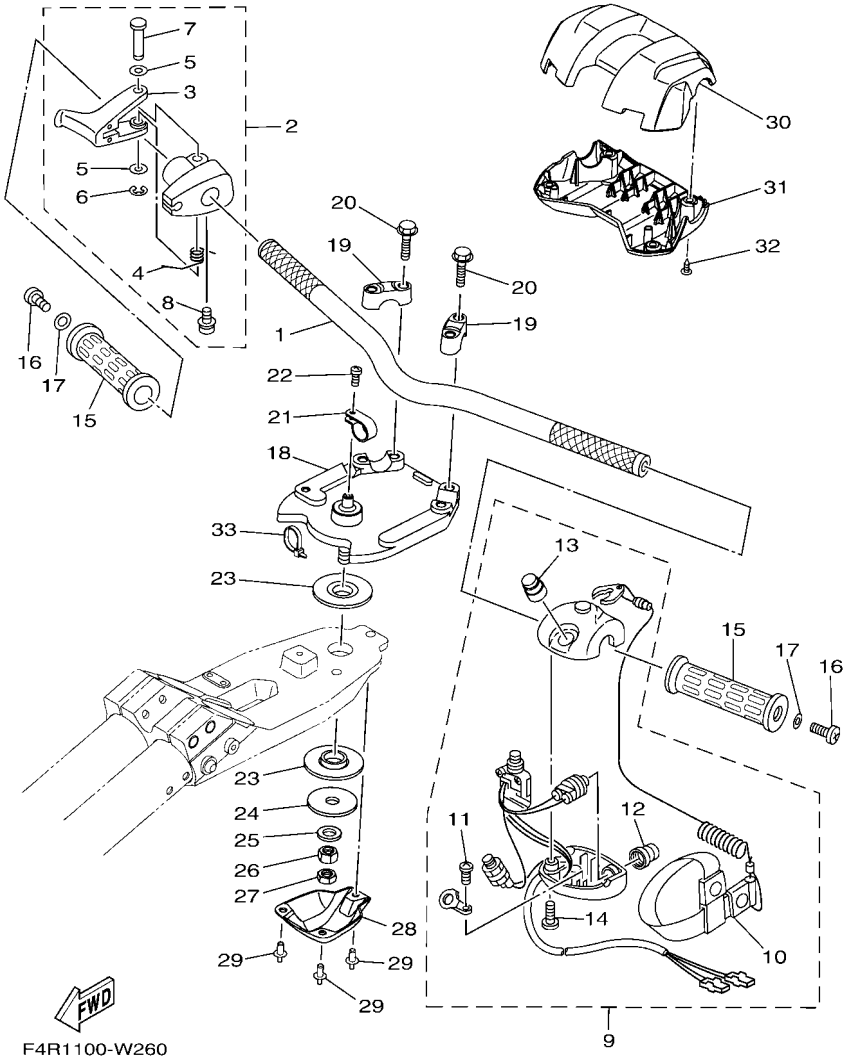

FIG. 26 STEERING 1

REF. NO.	PART NO.	DESCRIPTION	F4R6					REMARKS
28	F4R–61595–00	COVER	1					
29	90269–06019	RIVET	3					
30	F4R–6143D–01	PAD, STEERING 1	1					
31	F4R–6143E–01	PAD, STEERING 2	1					
32	90149–05937	SCREW	4					
33	90465–13M11	CLAMP	1					

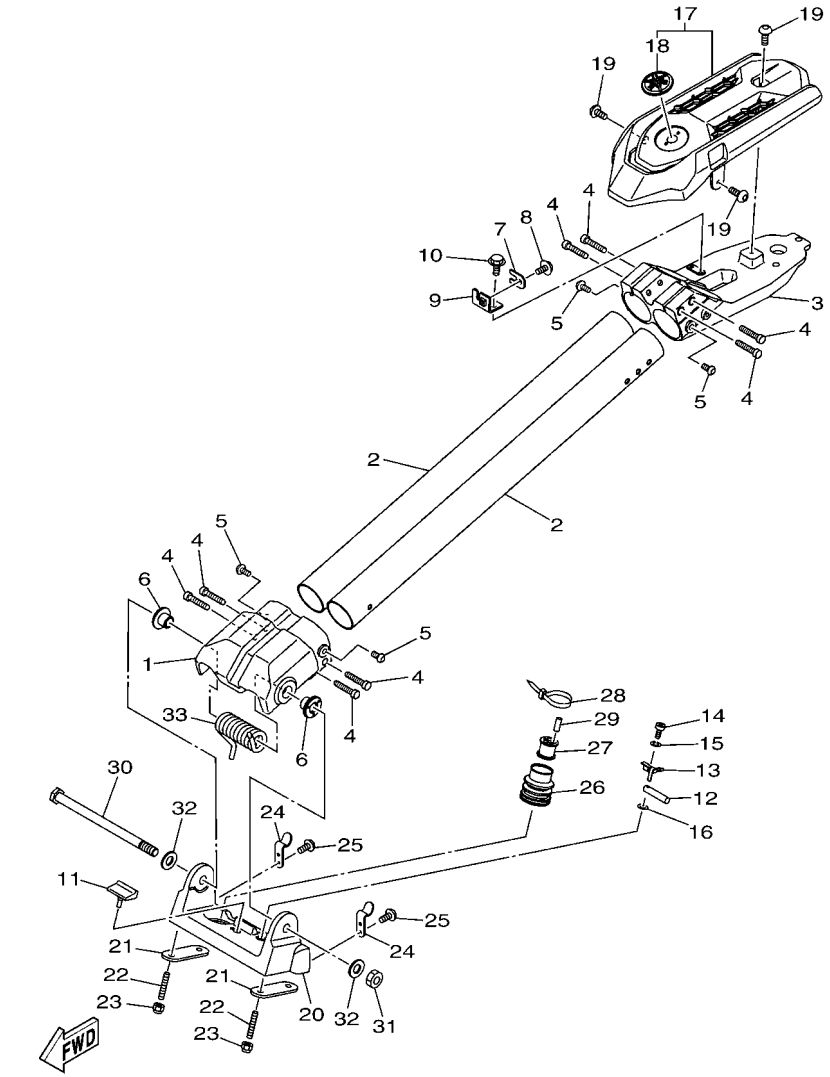

FIG. 27 STEERING 2

REF. NO.	PART NO.	DESCRIPTION	F4R6					REMARKS
1	F4R–6492B–00	POLE,1	1					
2	F4R–6492C–10	POLE 2	2					
3	F4R–6492D–00	POLE,3	1					
4	91380–08040	BOLT	8					
5	90149–08291	SCREW	4					
6	EW2–61344–01	BUSH	2					
7	FX1–61468–00	STOPPER, CABLE	1					
8	90119–06913	BOLT, WITH WASHER	1					
9	F4R–61467–00	BRACKET,STOPPER CABLE	1					
10	95880–06016	BOLT, FLANGE	2					
11	F4R–61337–00	STOPPER, POLE	1					
12	F4R–61142–00	PIN STOPPER	1					
13	F4R–61339–00	HOLDER, STOPPER	1					
14	97880–05012	SCREW, PAN HEAD	1					
15	92990–05100	WASHER, SPRING	1					
16	90202–06004	WASHER, PLATE	1					
17	F4R–6142A–01	STEERING PAD COMP	1					
18	1RC–2413B–02	.EMBLEM	1					
19	90111–06041	BOLT, HEXAGON SOCKET BUTTON	3					
20	F4R–6133C–00	BRACKET,PIVOT	1					
21	F4R–6133B–00	PLATE, BRACKET	2					
22	F4R–67535–00	BOLT, STUD	4					
23	95720–08300	NUT, SELF-LOCKING	4					
24	F4R–65135–00	STOPPER, HATCH 1	2					
25	90111–05037	BOLT, HEXAGON SOCKET BUTTON	4					
26	FX1–61338–00	GROMMET	1					
27	EW2–61465–00	PACKING, CABLE	1					

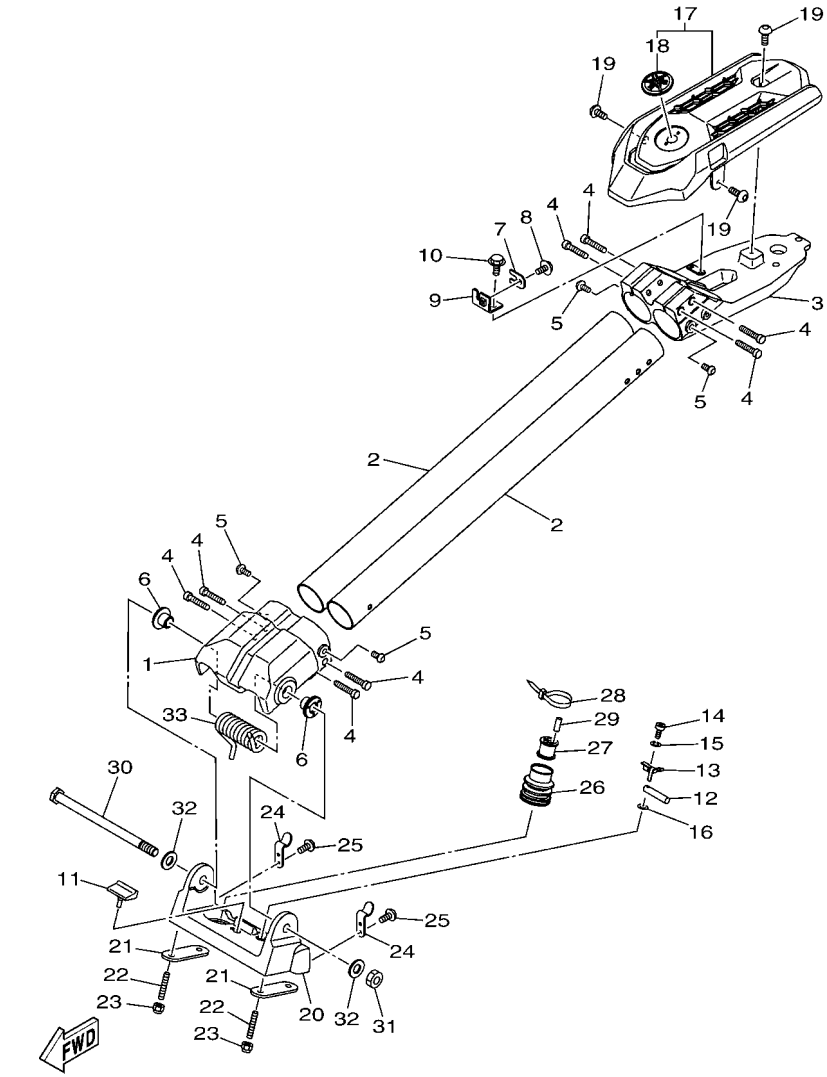

F4R2100-X270

FIG. 27 STEERING 2

REF. NO.	PART NO.	DESCRIPTION	F4R6					REMARKS
28	90601–20006	BAND	1					
29	F4R–62723–00	SEAL	1					
30	FX1–6134L–00	SHAFT,PIVOT	1					
31	90170–14913	NUT	1					
32	92990–14200	WASHER, PLAIN	2					
33	F4R–61391–00	SPRING, PIVOT	1					

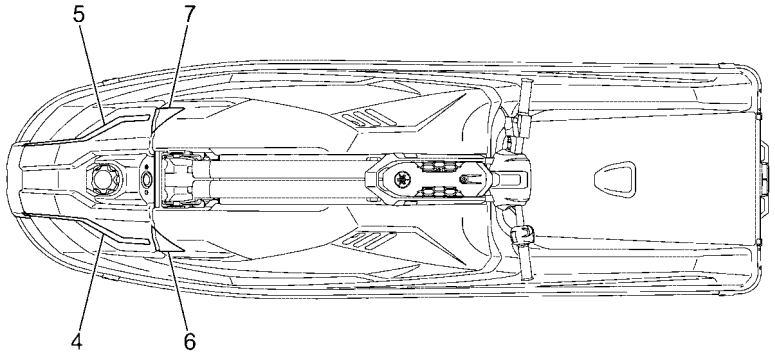

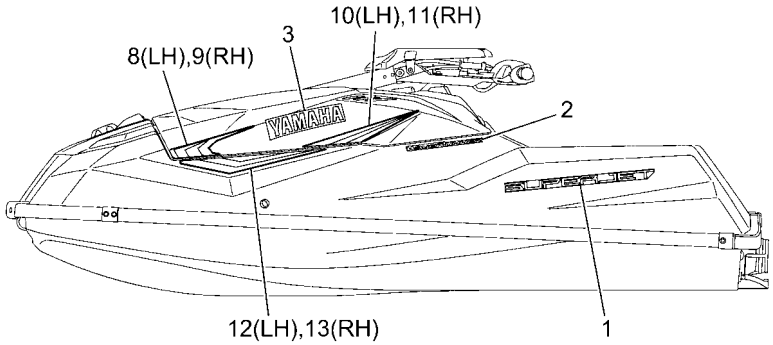

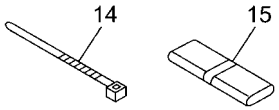

F4R6100-1280

FIG. 28 GRAPHICS

REF. NO.	PART NO.	DESCRIPTION	F4R6					REMARKS
1	F4R–6417B–00	GRAPHIC 1	2					
2	F4R–6417C–00	GRAPHIC 2	2					
3	F4R–6411C–10	EMBLEM, YAMAHA	2					
4	F4R–6417E–00	GRAPHIC 4 (LH)	1					
5	F4R–6417E–10	GRAPHIC 4 (RH)	1					
6	F4R–6417F–00	GRAPHIC 5 (LH)	1					
7	F4R–6417F–10	GRAPHIC 5 (RH)	1					
8	F4R–6417G–00	GRAPHIC 6 (LH)	1					
9	F4R–6417G–10	GRAPHIC 6 (RH)	1					
10	F4R–6417H–00	GRAPHIC 7 (LH)	1					
11	F4R–6417H–10	GRAPHIC 7 (RH)	1					
12	F4R–6417J–00	GRAPHIC 8 (LH)	1					
13	F4R–6417J–10	GRAPHIC 8 (RH)	1					
14	90464–20258	CLAMP	2					
15	GM6–65987–02	BAG	1					

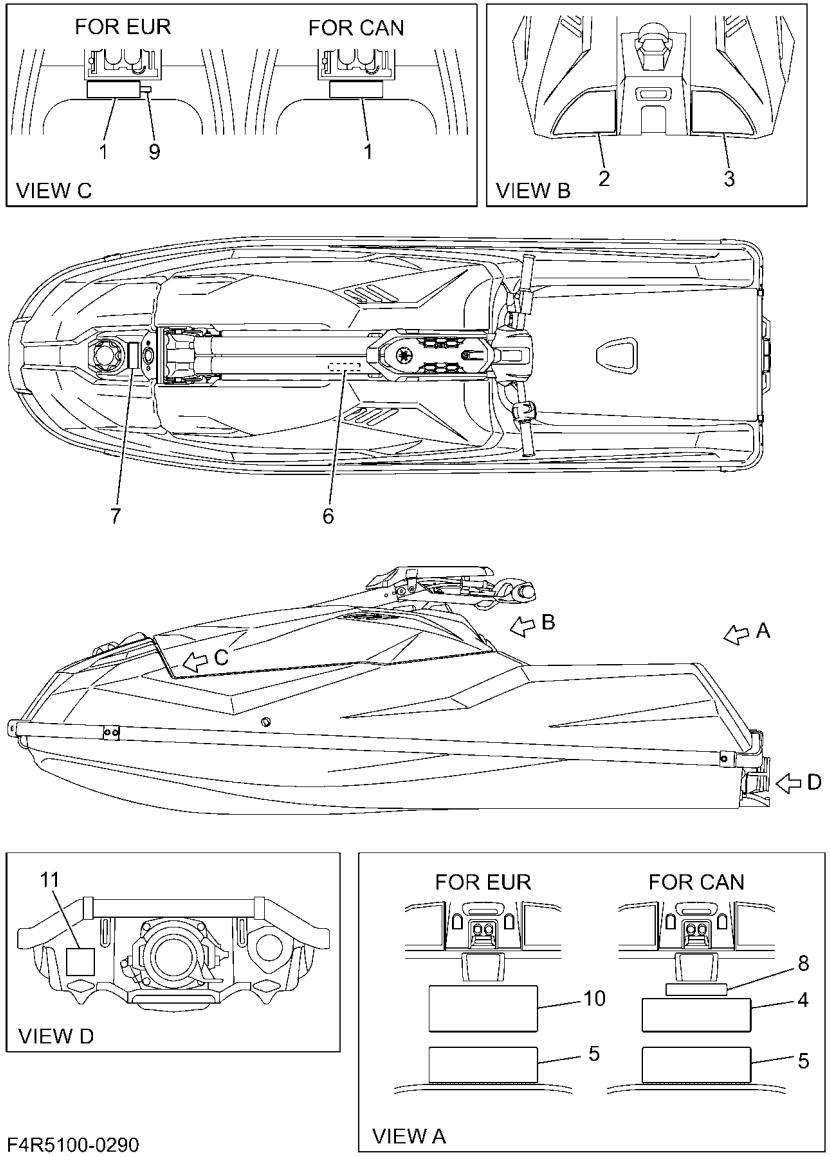

F4R5100-0290

FIG. 29 IMPORTANT LABELS

REF. NO.	PART NO.	DESCRIPTION	F4R6					REMARKS
1	F4R–6415B–10	LABEL, WARNING(FUEL)	1					
2	F4R–641B2–00	LABEL, WARNING UNIFORM 2	1					
3	F4R–641B2–10	LABEL, WARNING UNIFORM 2	1					
4	F4R–641B2–40	LABEL, WARNING UNIFORM 2	1					FOR CAN
5	F4R–641B2–50	LABEL, WARNING UNIFORM 2	1					
6	F4R–641F5–10	LABEL, FIRE EXTINGUISHER 1	1					
7	F4R–6419B–10	LABEL 1	1					
8	F4R–6419K–00	LABEL, CANADA	1					FOR CAN
9	B88–2817K–10	LABEL, FUEL	1					FOR EUR
10	F4R–641E2–20	LABEL, SET 2	1					FOR EUR
11	F2F–6418F–00	LABEL, RIGHTING	1					

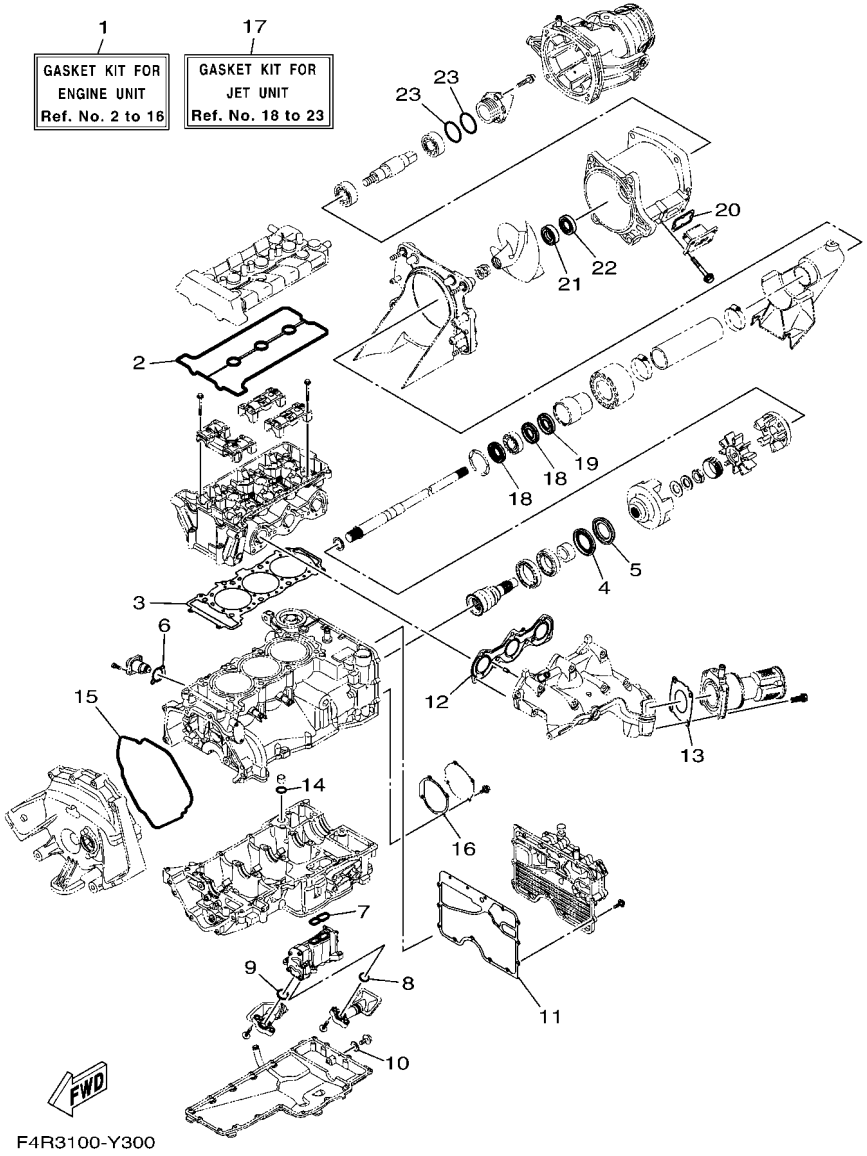

FIG. 30 REPAIR KIT 1

REF. NO.	PART NO.	DESCRIPTION	F4R6					REMARKS
1	6GA–W0001–02	GASKET KIT FOR ENGINE UNIT	1					
2	6EY–11193–00	.GASKET, HEAD COVER 1	1					
3	6EY–11181–01	.GASKET, CYLINDER HEAD 1	1					
4	93101–40001	.OIL SEAL	1					
5	93101–40002	.OIL SEAL	1					
6	2C0–12213–00	.GASKET, TENSIONER CASE	1					
7	6EY–13563–00	.GASKET	1					
8	6EY–13477–00	.GASKET	1					
9	6EY–13476–00	.GASKET	1					
10	90430–08209	.GASKET	1					
11	6EY–15453–01	.GASKET	1					
12	6GA–14613–00	.GASKET, EXHAUST PIPE	1					
13	6GA–14739–00	.GASKET, MUFFLER DAMPER 1	1					
14	93210–17010	.O-RING	1					
15	6EY–15461–00	.GASKET, CRANKCASE COVER 2	1					
16	6EY–15463–01	.GASKET, 2	1					
17	6GA–W0001–21	GASKET KIT FOR JET UNIT	1					
18	93101–25M55	.OIL SEAL	2					
19	93101–24001	.OIL SEAL	1					
20	6GA–G2414–00	.O-RING	1					
21	93102–25M34	.OIL SEAL	1					
22	93101–25M50	.OIL SEAL	1					
23	93210–44003	.O-RING	2					

PART NO.	REF. NO.
6EY–11102–00	1 – 2
6EY–11110–00	1 – 1
6EY–11119–00	1 – 20
6EY–1111E–10	1 – 18
5VY–1111G–00	1 – 15
6EY–11125–00	8 – 25
6EY–11126–10	8 – 27
2C0–11133–11	1 – 3
8HF–11134–10	1 – 4
6EY–11164–00	8 – 20
6EY–11166–10	8 – 16
6EY–11181–01	1 – 16
	30 – 3
6EY–11191–10	1 – 9
6EY–11193–00	1 – 11
	30 – 2
69J–11301–11	2 – 22
68V–11325–02	2 – 23
67F–11328–01	2 – 24
6EY–11400–00	3 – 1
6EY–11406–10	3 – 14
2HC–11407–00	3 – 25
3LD–11416–10	3 – 6
3LD–11416–20	3 – 6
3LD–11416–30	3 – 6
3LD–11416–40	3 – 6
3LD–11416–50	3 – 6
3LD–11416–60	3 – 6
3LD–11416–70	3 – 6
8ES–11428–01	2 – 8
8ES–11454–00	3 – 27
2HC–11464–00	3 – 30
6EY–11478–00	3 – 29
6EY–11531–00	3 – 26
6JF–11571–00	3 – 20
8KH–11603–02	3 – 8
8KH–11631–00	3 – 7
6EY–11633–00	3 – 9
B0F–11650–00	3 – 2
5JW–11654–00	3 – 3
5JW–11656–00	3 – 5
5JW–11656–10	3 – 5
5JW–11656–20	3 – 5
5JW–11656–30	3 – 5
5JW–11656–40	3 – 5
5JW–11656–50	3 – 5
6EY–11917–10	3 – 17
8GL–12111–10	4 – 5

PART NO.	REF. NO.
8GL–12113–00	4 – 8
1RC–12116–00	4 – 7
3D7–12117–00	4 – 9
1WG–12118–00	4 – 10
2HC–12119–00	4 – 11
8GL–12121–10	4 – 6
6EY–12153–01	4 – 13
1HX–12168–00	4 – 12
1HX–12168–20	4 – 12
1HX–12168–40	4 – 12
1HX–12168–60	4 – 12
1HX–12168–80	4 – 12
1HX–12168–A0	4 – 12
1HX–12168–F0	4 – 12
1HX–12168–H1	4 – 12
1HX–12168–K1	4 – 12
1HX–12168–M1	4 – 12
1HX–12168–R1	4 – 12
1HX–12168–U1	4 – 12
1HX–12168–W1	4 – 12
1HX–12168–Y1	4 – 12
1HX–12169–11	4 – 12
1HX–12169–31	4 – 12
1HX–12169–50	4 – 12
1HX–12169–70	4 – 12
1HX–12169–90	4 – 12
1HX–12169–E0	4 – 12
1HX–12169–G0	4 – 12
1HX–12169–J0	4 – 12
1HX–12169–L0	4 – 12
1HX–12169–N0	4 – 12
1HX–12169–T0	4 – 12
6EY–12170–00	4 – 1
2HC–12176–00	4 – 3
6EY–12180–00	4 – 2
8KH–12210–00	4 – 15
2C0–12213–00	4 – 16
	30 – 6
5BE–12241–01	1 – 10
6EY–12251–00	4 – 18
2HC–12252–00	4 – 19
6EY–12279–00	4 – 21
6D3–12411–00	10 – 25
6EY–12413–00	10 – 26
6EY–12577–00	10 – 19
6S5–12579–00	10 – 21
6EY–12580–00	10 – 1
6EY–12584–00	10 – 6

PART NO.	REF. NO.
67X–12590–30	10 – 28
67X–12590–A0	10 – 28
6EY–12880–01	5 – 8
8ES–13284–00	2 – 17
6EY–13300–00	7 – 1
6EY–13355–00	7 – 2
6EY–13405–00	7 – 5
6EY–13406–00	7 – 8
6EY–13417–10	7 – 18
5GH–13440–90	7 – 17
6EY–13455–00	7 – 20
6EY–13470–03	8 – 2
6EY–13476–00	7 – 9
	30 – 9
6EY–13477–00	7 – 6
	30 – 8
6EY–13532–00	5 – 13
6EY–13556–10	8 – 3
8FP–13556–10	5 – 11
6EY–13557–10	8 – 5
6EY–13563–00	7 – 4
	30 – 7
6EY–13641–03	5 – 2
6EY–13750–01	5 – 1
2HC–13761–00	5 – 5
F4R–13907–01	23 – 9
6EY–14126–00	5 – 4
6EY–14156–00	5 – 3
68V–1416A–00	5 – 6
6JF–14305–00	25 – 11
6JF–14410–10	6 – 6
6BH–14445–00	5 – 12
6GA–14613–00	9 – 1
	30 – 12
6JF–1469W–00	9 – 8
6GA–14711–00	9 – 2
6GA–14739–00	9 – 6
	30 – 13
6JF–14752–00	9 – 11
6JF–14784–00	9 – 7
6EY–15109–08	2 – 2
6EY–15362–10	8 – 14
3Y1–15363–10	1 – 12
4JT–15381–01	2 – 6
6EY–15421–00	2 – 18
6EY–15453–01	8 – 1
	30 – 11
6EY–15461–00	2 – 19

PART NO.	REF. NO.
6EY–15461–00	30 – 15
6EY–15463–01	2 – 29
	30 – 16
6EY–15486–00	7 – 14
2HC–15512–00	13 – 2
8FA–15515–00	13 – 1
8ES–15521–00	13 – 3
6EY–15589–01	2 – 28
6EY–15590–00	13 – 4
EU0–23814–32	26 – 19
1RC–2413B–02	27 – 18
70R–24489–00	23 – 28
6AN–2450B–10	5 – 16
70R–24543–00	23 – 27
6JF–26311–00	25 – 12
4N0–27114–00	19 – 18
B88–2817K–10	29 – 9
6EY–41661–10	18 – 4
6EY–41662–00	18 – 5
6GA–44517–00	18 – 1
6EY–44574–00	18 – 2
6EY–45155–00	3 – 24
6EY–4581J–00	3 – 34
6K8–51162–00	20 – 6
6DU–51319–00	11 – 16
F4R–51333–00	11 – 30
6EY–51381–A0	12 – 13
F4R–61142–00	27 – 12
F4R–61337–00	27 – 11
F4R–61338–00	23 – 3
FX1–61338–00	27 – 26
F4R–61339–00	27 – 13
F4R–6133B–00	27 – 21
F4R–6133C–00	27 – 20
EW2–61344–01	27 – 6
FX1–6134L–00	27 – 30
F4R–61391–00	27 – 33
EW2–61417–00	26 – 23
EW2–61419–00	26 – 24
F4R–6142A–01	27 – 17
F4R–6143D–01	26 – 30
F4R–6143E–01	26 – 31
F2N–61460–00	25 – 4
EU0–61461–02	25 – 1
	25 – 6
EU0–61461–30	25 – 5
EW2–61465–00	27 – 27
F4R–61467–00	27 – 9

PART NO.	REF. NO.
FX1–61468–00	27 – 7
F4R–61481–01	25 – 2
F4R–61541–00	26 – 18
F4R–61552–10	26 – 1
EW2–61553–00	26 – 15
F4R–61595–00	26 – 28
F2N–61628–A1	20 – 17
EU0–61652–00	10 – 5
F4R–61653–00	20 – 19
F4R–62127–01	22 – 1
F4R–6213G–00	22 – 3
EW2–62142–00	23 – 26
EW2–62149–31	23 – 31
F2F–6214A–00	23 – 25
F4R–62280–00	20 – 21
EU0–62283–00	20 – 22
F4R–62511–00	21 – 1
F4R–6251D–00	21 – 13
F4R–6251E–00	21 – 14
F4R–6252A–00	21 – 9
F4R–6252C–00	21 – 7
	21 – 19
F2F–62552–00	21 – 5
F4R–62664–01	19 – 6
F4R–62723–00	27 – 29
F0X–62733–00	24 – 14
F4R–6273B–00	11 – 28
F4R–62840–01	19 – 30
EW2–62846–00	19 – 31
F4R–6284E–00	19 – 32
F4R–6351B–00	21 – 21
F4R–6351C–10	21 – 22
F4R–6351D–10	21 – 23
F4R–63844–00	24 – 19
F4R–6411C–10	28 – 3
F4R–6415B–10	29 – 1
F4R–6417B–00	28 – 1
F4R–6417C–00	28 – 2
F4R–6417E–00	28 – 4
F4R–6417E–10	28 – 5
F4R–6417F–00	28 – 6
F4R–6417F–10	28 – 7
F4R–6417G–00	28 – 8
F4R–6417G–10	28 – 9
F4R–6417H–00	28 – 10
F4R–6417H–10	28 – 11
F4R–6417J–00	28 – 12
F4R–6417J–10	28 – 13

PART NO.	REF. NO.
F2F–6418F–00	29 – 11
F4R–6419B–10	29 – 7
F4R–6419K–00	29 – 8
F4R–641B2–00	29 – 2
F4R–641B2–10	29 – 3
F4R–641B2–40	29 – 4
F4R–641B2–50	29 – 5
F4R–641E2–20	29 – 10
F4R–641F5–10	29 – 6
GM6–64256–00	19 – 15
F4R–64261–01	24 – 6
F4R–6492B–00	27 – 1
F4R–6492C–10	27 – 2
F4R–6492D–00	27 – 3
F3D–64953–00	20 – 18
F4R–65135–00	27 – 24
F4R–65136–00	19 – 10
F4R–65137–00	19 – 11
F4R–6514B–00	19 – 29
F4R–6514G–00	19 – 4
F4R–6514H–00	19 – 5
F4R–6514M–00	19 – 36
F4R–65157–00	19 – 20
F4R–65161–00–P0	19 – 2
GM6–6516C–00	19 – 19
F4R–6516M–00	19 – 24
F4R–6516W–00	19 – 27
F4R–65171–00–P0	19 – 3
F4R–65175–00	19 – 23
F4R–6517A–00–P0	19 – 1
F4R–6517M–00	19 – 17
	19 – 25
F4R–65191–00	19 – 28
F4R–65193–00	19 – 21
F4R–65372–00	19 – 22
F4R–6576B–00	24 – 17
F4R–6577C–00	24 – 16
GM6–65987–02	28 – 15
F0D–67250–10	26 – 2
F0D–67255–02	26 – 3
EW2–67256–00	26 – 4
F0D–67257–00	26 – 7
EW2–67258–01	26 – 5
EW2–67259–01	26 – 6
F1X–6725F–01	26 – 8
GK5–67267–10	25 – 3
F4R–67278–00	23 – 4
EU0–67324–00	18 – 9

PART NO.	REF. NO.
EU0–67354–C0	18 – 11
EU0–67354–D0	18 – 11
F4R–67535–00	27 – 22
F4V–6753B–A0	24 – 12
F4R–67550–00	24 – 1
F4R–67555–00	24 – 3
F4R–6755J–00	24 – 2
F1B–67564–00	24 – 13
F4R–6756C–00	19 – 34
F4R–6758D–00	24 – 9
F4R–6759E–00	24 – 7
F4R–67618–00	20 – 2
F4R–6761D–00	20 – 1
F4R–67711–00	23 – 1
F4R–6773D–00	23 – 18
F1B–67747–00	23 – 7
F3Y–67767–A0	23 – 23
F4R–67772–00	20 – 11
F4R–67773–00	23 – 6
EW2–67821–00	24 – 8
GP7–6783F–A0	23 – 17
F4R–67844–00	23 – 19
F4R–67856–00	23 – 24
F4R–6785G–00	23 – 30
F4R–6785H–00	23 – 21
F4R–6820A–00	17 – 8
F4R–68211–00	17 – 2
F4R–68217–01	17 – 1
EU0–68218–04	17 – 7
F4R–68221–00	17 – 3
EU0–68221–30	17 – 4
F4R–68244–00	17 – 9
F4R–68310–00	26 – 9
FK7–68312–02	26 – 12
FK7–68313–02	26 – 13
EW2–68348–00	26 – 10
F2X–68572–A0	11 – 26
F2S–68577–A0	11 – 27
F4R–6883B–00	12 – 18
4D9–81168–00	16 – 13
60E–81315–01	16 – 2
60E–81328–00	13 – 10
6S5–81364–11	8 – 9
6EY–81410–02	13 – 8
6EY–81450–01	13 – 7
6EY–81800–00	14 – 1
6EY–81826–00	14 – 6
6EY–81840–00	14 – 4
11H–81844–00	14 – 2
1FK–81847–00	14 – 3
3TB–81847–00	14 – 5
	14 – 7
6EY–81940–09	15 – 15
60E–81950–00	15 – 21
68V–81950–00	15 – 22
6EY–81953–00	15 – 17
6D3–81960–01	15 – 10
6EY–81975–00	15 – 6
6GA–82115–01	15 – 18
6GA–82116–00	17 – 14
6EY–82117–00	15 – 19
F4R–82149–00	17 – 12
6JF–82153–01	15 – 13
6EX–82310–02	15 – 4
6A0–82317–01	15 – 8
6EY–82355–00	15 – 16
5S7–82380–00	5 – 7
68V–82504–00	16 – 1
6CR–82560–00	16 – 10
6ET–82576–00	16 – 3
6JF–8259L–01	15 – 12
6CS–8273J–11	16 – 15
60E–83627–00	6 – 9
6EY–84385–00	10 – 4
6DE–85790–00	16 – 18
61A–85790–01	16 – 8
8FP–85886–00	5 – 14
2S3–85896–02	16 – 12
6JF–8591A–00	15 – 2
6EY–8591S–00	15 – 3
6GA–G2414–00	11 – 7
	30 – 20
6GA–G5235–00	12 – 2
6JF–G5321–00	12 – 10
6JF–G5332–00	12 – 1
6JF–G5511–00	12 – 3
6GA–G5514–00	11 – 10
6GA–G5593–00	12 – 8
6JF–G5831–00	11 – 1
6GA–G6882–00	11 – 6
6GA–R1312–02	11 – 4
6BU–R1313–00	11 – 23
6GA–R1318–00	11 – 18
6JF–R1321–00	11 – 17
6EX–R1326–10	11 – 13
F2N–U7831–10	23 – 10
GP7–U7832–01	23 – 12
GP7–U7833–11	23 – 11
GP7–U7834–00	23 – 16
GP7–U7835–00	23 – 13
6GA–W0001–02	30 – 1
6GA–W0001–21	30 – 17
6GA–W009B–01	2 – 1
90105–06027	1 – 5
90105–06035	10 – 27
90105–06M07	2 – 25
90105–06M15	8 – 21
90105–07004	4 – 4
90105–08243	5 – 9
90105–08902	26 – 20
90105–10M49	18 – 6
90105–12101	3 – 12
90109–05M89	19 – 9
90109–06295	4 – 20
90109–06308	2 – 12
90109–066F0	1 – 14
90109–06M92	18 – 3
90110–06172	7 – 7
	7 – 10
90110–06274	4 – 17
90110–06287	7 – 12
90110–06335	7 – 13
90110–06822	11 – 15
90110–08212	13 – 5
90111–05037	27 – 25
90111–06041	27 – 19
90111–06049	17 – 10
	19 – 14
90111–08023	25 – 9
90119–06078	1 – 19
90119–06281	19 – 12
90119–06309	17 – 6
90119–06311	15 – 7
90119–06889	11 – 8
90119–06913	27 – 8
90119–06MA3	16 – 17
90119–08034	9 – 4
90119–08038	11 – 31
90119–08097	9 – 5
90119–08169	6 – 3
90119–08187	6 – 4
90119–08829	11 – 29
90119–08840	11 – 24
90119–08881	11 – 22
90119–08904	18 – 8
	18 – 10
	23 – 2
90119–09004	2 – 3
90119–10004	1 – 8
90119–10066	11 – 5
90119–10819	11 – 3
90149–05937	19 – 26
	26 – 32
90149–05959	26 – 16
90149–05960	19 – 37
	21 – 2
	21 – 10
	21 – 16
90149–06190	7 – 3
90149–08291	27 – 5
90151–06024	2 – 7
90169–049U1	23 – 14
90170–14913	27 – 31
90176–08080	5 – 19
90179–08327	3 – 4
90179–20019	3 – 23
90183–051A5	19 – 8
90183–06902	19 – 13
90201–05928	26 – 17
90201–06906	25 – 7
90201–06M62	12 – 16
90201–08MA4	23 – 5
90201–10060	20 – 12
90201–10591	3 – 33
90201–121H0	3 – 13
90201–20030	3 – 21
90201–24800	12 – 9
90201–30013	13 – 6
90202–06004	27 – 16
90208–20001	3 – 22
90215–10003	3 – 32
90267–329UR	23 – 15
90267–48930	19 – 35
	20 – 15
	20 – 25
	22 – 2
	23 – 35
	24 – 18
90267–48941	19 – 16
90267–48949	21 – 6
	21 – 8
	21 – 15
90267–48949	21 – 20
	23 – 29
90269–06019	26 – 29
90280–03045	3 – 11
90387–06119	15 – 9
90387–06289	12 – 12
90387–06M05	8 – 10
	16 – 5
90387–08M06	11 – 25
90387–08M37	6 – 2
	6 – 8
90401–20008	7 – 16
90430–06M03	2 – 26
90430–08119	1 – 7
90430–08209	7 – 24
	30 – 10
90445–14812	11 – 19
90445–14M18	20 – 4
90445–14M26	20 – 8
90445–16019	10 – 13
90445–16026	10 – 16
90445–18012	10 – 7
90445–18018	10 – 23
90445–18020	8 – 22
90445–18M06	7 – 19
90445–21015	10 – 11
90445–21016	10 – 31
90445–25005	10 – 35
90446–14M23	23 – 33
90446–14M64	23 – 22
90446–20M13	11 – 20
90446–20M65	20 – 5
90446–20M70	20 – 9
90446–24M44	10 – 14
90446–24M89	10 – 3
90446–24MF4	8 – 23
90447–19004	8 – 17
90447–19014	8 – 28
	10 – 8
90447–19018	10 – 17
90447–22018	10 – 32
90447–28009	10 – 36
90450–90002	6 – 5
90450–99015	9 – 12
90464–18246	15 – 24
90464–20005	16 – 19
90464–20258	28 – 14
90464–35132	8 – 30
90464–35132	10 – 10
	16 – 6
90465–06028	20 – 10
90465–06029	10 – 29
90465–06030	10 – 30
90465–11829	11 – 21
90465–11M10	23 – 32
90465–13M11	20 – 7
	26 – 33
90465–13M39	16 – 7
90467–110A1	8 – 26
90467–141A3	10 – 15
90467–150A5	10 – 2
	24 – 15
90467–160A0	10 – 9
	10 – 18
	10 – 20
	10 – 22
	10 – 24
90467–170A4	8 – 19
	8 – 24
	8 – 29
90467–170A5	7 – 21
90467–200A3	8 – 18
	10 – 33
90467–200A4	10 – 12
90467–240A0	10 – 34
90480–06M46	8 – 8
90480–22M15	6 – 1
	6 – 7
90600–91728	26 – 21
90600–91736	20 – 14
	20 – 24
	23 – 34
90601–15041	12 – 17
90601–15573	23 – 20
90601–17586	24 – 4
	24 – 10
	24 – 11
90601–19584	24 – 5
90601–20006	17 – 5
	17 – 11
	20 – 26
	23 – 36
	27 – 28
90601–20016	20 – 16
91314–06065	1 – 17
91317–06014	13 – 11

PART NO.	REF. NO.
91317–06035	13 – 9
91380–06016	16 – 14
91380–06020	8 – 11
91380–08040	27 – 4
92990–05100	27 – 15
92990–05200	19 – 38
	21 – 3
	21 – 11
	21 – 17
92990–06100	14 – 10
92990–10600	16 – 9
92990–12200	26 – 25
92990–14200	27 – 32
93101–24001	12 – 7
	30 – 19
93101–25M50	11 – 12
	30 – 22
93101–25M55	12 – 4
	30 – 18
93101–40001	3 – 18
	30 – 4
93101–40002	3 – 19
	30 – 5
93102–25M34	11 – 11
	30 – 21
93210–17010	2 – 16
	30 – 14
93210–19123	1 – 13
93210–19522	8 – 4
93210–24M79	8 – 15
93210–32172	16 – 16
93210–44003	11 – 14
	30 – 23
93306–00702	3 – 15
93306–205XG	12 – 6
93306–255X7	11 – 9
93306–30323	2 – 5
93306–90901	3 – 16
93310–42239	3 – 28
93450–19095	3 – 10
93450–32152	2 – 9
93606–12019	9 – 3
	18 – 7
93606–19M23	8 – 6
94580–25060	7 – 15
94591–57140	4 – 14
94702–00409	15 – 1
95024–08030	9 – 10

PART NO.	REF. NO.
95380–06700	14 – 9
	25 – 8
95380–12600	26 – 26
95380–12700	26 – 27
95612–08625	5 – 18
95720–05300	19 – 33
	19 – 39
	21 – 4
	21 – 12
	21 – 18
95720–06300	12 – 15
95720–08300	17 – 13
	20 – 20
	25 – 10
	27 – 23
95720–10300	20 – 13
95812–06012	4 – 22
95812–08070	2 – 4
95814–06020	5 – 10
	8 – 12
	15 – 11
95814–06035	8 – 7
95814–06045	2 – 15
95814–06055	8 – 13
95814–06085	2 – 14
95814–08020	7 – 23
95817–06055	2 – 13
95880–06010	23 – 8
95880–06016	15 – 5
	27 – 10
95E34–06012	2 – 30
95E34–06020	7 – 22
95E34–06030	9 – 9
95E34–08012	1 – 6
97012–10025	3 – 31
97513–05514	13 – 12
97513–08514	17 – 15
97513–08530	14 – 8
97513–08535	5 – 17
97513–08555	2 – 21
97702–50520	5 – 15
97780–50016	19 – 7
97780–50114	20 – 3
97780–50514	20 – 23
97780–60025	16 – 4
97780–60516	15 – 14
97780–60520	15 – 23
97880–03008	26 – 11

PART NO.	REF. NO.
97880–05012	27 – 14
97880–05025	26 – 14
97E95–06520	16 – 11
97E95–06525	12 – 11
97E95–06550	12 – 14
97E95–06612	15 – 20
97E95–08540	2 – 27
98980–04010	26 – 22
99009–52500	12 – 5
99530–08016	7 – 11
99530–10014	2 – 10
99530–10114	2 – 11
99590–08012	2 – 20
99590–14016	11 – 2