YAMAHA

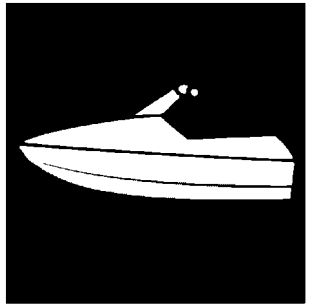

PARTS CATALOGUE

WaveRunner VX Cruiser
VX1050B-C (F9L2 /6JSL/6JS1)

YAMAHA
GENUINE
Parts & Accessories

31F9L-100E5

( )

VX1050B-C
PARTS CATALOGUE
©2026 by Yamaha Motor Co., Ltd.
1st edition, January 2026
All rights reserved.
Any reprinting or unauthorized use
without the written permission of
Yamaha Motor Co., Ltd.
is expressly prohibited.
Printed in Japan.

FOREWORD

This Parts Catalogue is related to the parts for the model(s) on the cover page. When you are ordering replacement parts, please refer to this Parts Catalogue and quote both part numbers and part names correctly.

1. Modifications or additions which have been made after the issue of the Parts Catalogue will be announced in the Parts News.
   It is advisable that you make the necessary corrections to the Parts Catalogue according to the Parts News.

2. Abbreviations
   The following abbreviations are used in this Parts Catalogue.

   “UR” Use specified parts number.

   “UN” Use as many as needed.

   “AP” Alternate Parts

   “LM” Locally Made (Parts need to be ordered locally)

   “F#” Frame No. (Applicable machine No.)

   “O/S” Over Size

3. The number of components for assembly
   - Parts, which are to be supplied in an assembly, are listed with a dot (.) in front of the part name as shown below.
   - The numeral appearing to the right of each component part indicates the quantity of parts for each assembly unit.

PART NO.	DESCRIPTION	Q’TY	REMARKS
2F5–83310–60	FRONT FLASHER LIGHT ASSY	2	
115–83311–60	.BULB (6V–18W)	1	

4. Applicable colours of graphics are represented in the “REMARKS” as shown below.

PART NO.	DESCRIPTION	Q’TY	REMARKS
2N4–24110–00–X5	FUEL TANK COMP.	2	MXR
3J1–24240–10	.GRAPHIC, FUEL TANK	1	FOR MXR

5. Note that the illustrations for reference in finding parts numbers are not to be used for assembling. When assembling, please use the applicable service manual.

6. The asterisk (*) before a reference number indicates modified items after the first edition.

7. Applicable Serial No.

Engine Serial No.

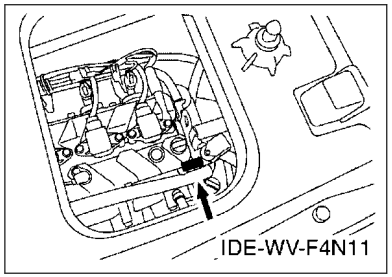

Primary Identification No.

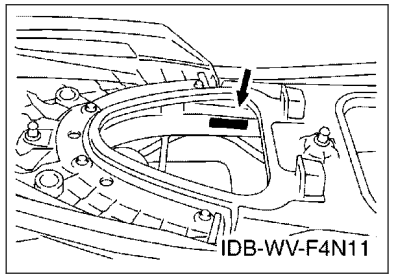

8. Applicable Colour Code (The (*) mark shows Model colour.)

Abbreviation	Colour Name	Colour Code
DBSC(*)	DULL BLUE SOLID C	1914
RM9(*)	RED METALLIC 9	1485

9. Quantity Column Information

Column No.	Name Of Q'ty Column	Destination
1	F9L2	CANADA,EUROPE

10. Applicable Starting Serial No.

Engine Serial No.

Serial No.	Name Of Q'ty Column	Model Code

Primary Identification No.

Serial No.	Name Of Q'ty Column	Model Code
F9L-800101	F9L2	F9L2

CONTENTS

CYLINDER....1
CRANKCASE.... 2
CRANKSHAFT & PISTON....4
VALVE.... 6
INTAKE....8
INTAKE 2....9
OIL PUMP....10
OIL COOLER....11
EXHAUST 1....13
EXHAUST 2....14
JET UNIT 1....16
JET UNIT 2....18
JET UNIT 3....19
GENERATOR....20
STARTING MOTOR.... 21
ELECTRICAL 1....22
ELECTRICAL 2....24
ELECTRICAL 3....25
ELECTRICAL 4....27
ENGINE MOUNT....28
ENGINE HATCH 1....29
ENGINE HATCH 2....31
ENGINE HATCH 3....33
HULL & DECK.... 35
GUNWALE & MAT....38
VENTILATION.... 41
SEAT & UNDER LOCKER.... 42
FUEL TANK....44
BILGE PUMP....46
EXHAUST 3....47
CONTROL CABLE.... 48
STEERING 1.... 50
STEERING 2.... 51
STEERING 3.... 53
GRAPHICS....54
IMPORTANT LABELS....55
REPAIR KIT 1....56

INDEX

NUMERICAL INDEX....57

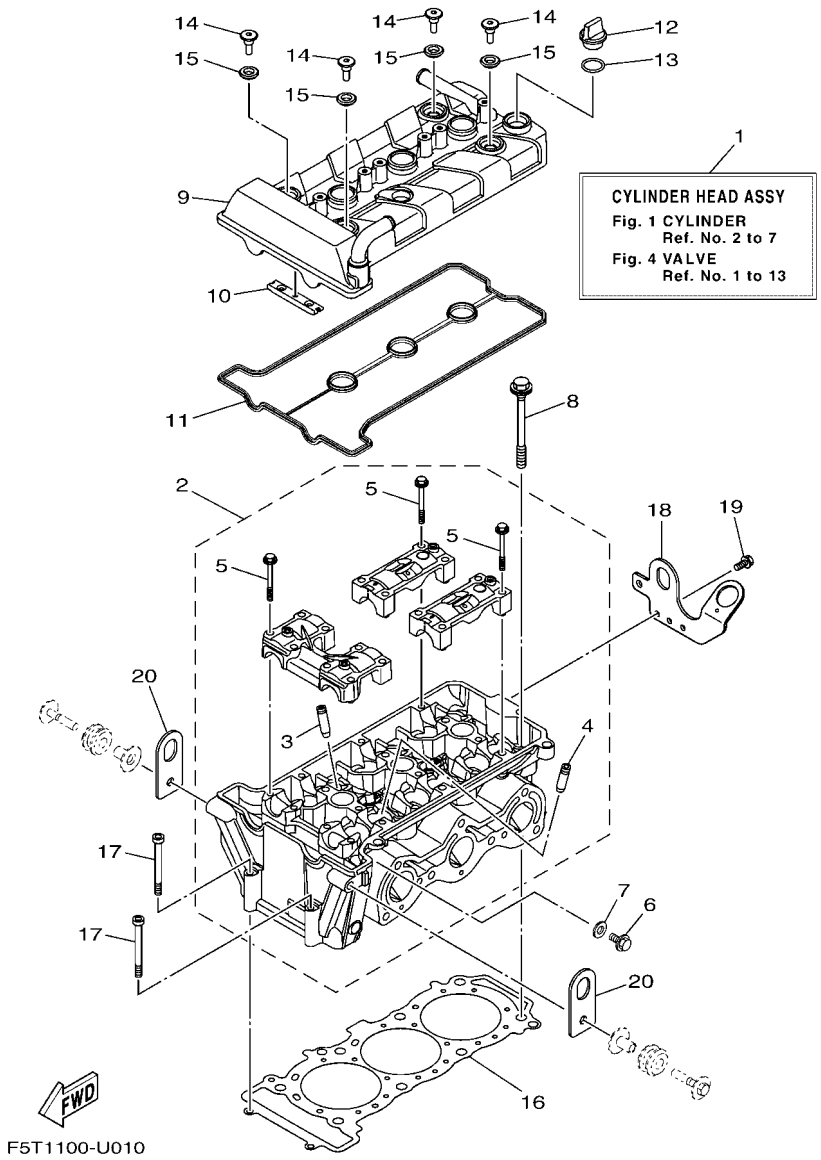

FIG. 1 CYLINDER

REF. NO.	PART NO.	DESCRIPTION	F9L2					REMARKS
1	6EY–11110–00	CYLINDER HEAD COMPLETE	1					
2	6EY–11102–00	CYLINDER HEAD ASSY	1					
3	2C0–11133–11	.GUIDE, VALVE 1	6					
4	8HF–11134–10	.GUIDE, VALVE 2	6					
5	90105–06027	.BOLT, FLANGE	16					
6	95E34–08012	BOLT, FLANGE DEEP RECESS	1					
7	90430–08119	GASKET	1					
8	90119–10004	BOLT, WITH WASHER	8					
9	6EY–11191–10	COVER, CYLINDER HEAD 1	1					
10	5BE–12241–01	GUIDE, STOPPER 2	1					
11	6EY–11193–00	GASKET, HEAD COVER 1	1					
12	3Y1–15363–10	PLUG, OIL	1					
13	93210–19123	O-RING	1					
14	90109–066F0	BOLT	4					
15	5VY–1111G–00	RUBBER, MOUNT 1	4					
16	6EY–11181–01	GASKET, CYLINDER HEAD 1	1					
17	91314–06065	BOLT, HEXAGON SOCKET HEAD	2					
18	6EY–1111E–10	HANGER, ENGINE 2	1					
19	90119–06078	BOLT, WITH WASHER	2					
20	6EY–11119–00	HANGER, ENGINE	2					

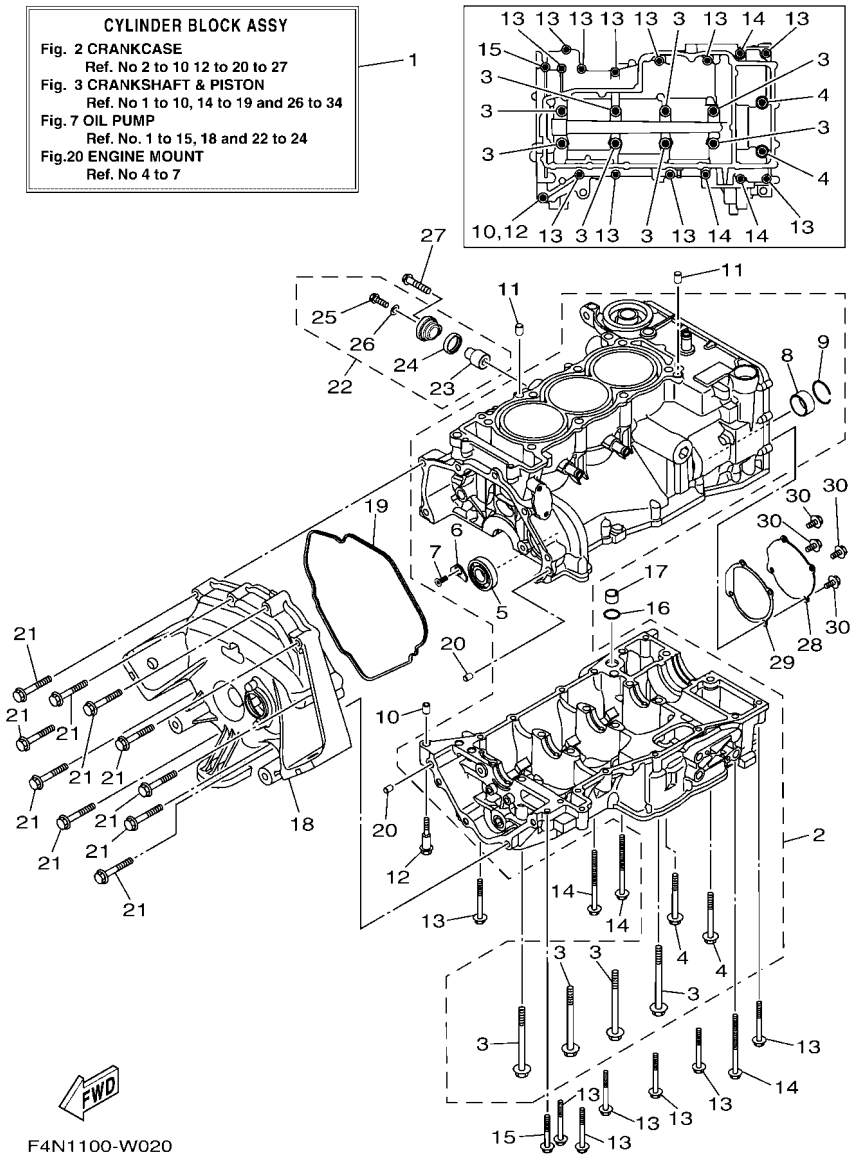

FIG. 2 CRANKCASE

REF. NO.	PART NO.	DESCRIPTION	F9L2					REMARKS
1	6GA–W009B–01	CYLINDER BLOCK ASSY	1					
2	6EY–15109–08	CRANKCASE ASSY	1					
3	90119–09004	.BOLT, WITH WASHER	8					
4	95812–08070	.BOLT, FLANGE	2					
5	93306–30323	.BEARING	1					
6	4JT–15381–01	.PLATE, BEARING COVER	1					
7	90151–06024	.SCREW, COUNTERSUNK	1					
8	8ES–11428–01	.BEARING 1	1					
9	93450–32152	.CIRCLIP	1					
10	99530–10014	PIN, DOWEL	1					
11	99530–10114	PIN, DOWEL	2					
12	90109–06308	BOLT	1					
13	95817–06055	BOLT, FLANGE	11					
14	95814–06085	BOLT, FLANGE	3					
15	95814–06045	BOLT, FLANGE	1					
16	93210–17010	O-RING	1					
17	8ES–13284–00	PIPE	1					
18	6EY–15421–00	COVER, CRANKCASE 2	1					
19	6EY–15461–00	GASKET, CRANKCASE COVER 2	1					
20	99590–08012	PIN, DOWEL	2					
21	97513–08555	BOLT, WITH WASHER	10					
22	69J–11301–11	ANODE COVER ASSY	1					
23	68V–11325–02	.ANODE	1					
24	67F–11328–01	.GROMMET, ANODE	1					
25	90105–06M07	.BOLT, FLANGE	1					
26	90430–06M03	.GASKET	1					
27	97E95–08540	BOLT, HEXAGON W/W DEEP RECESS	1					

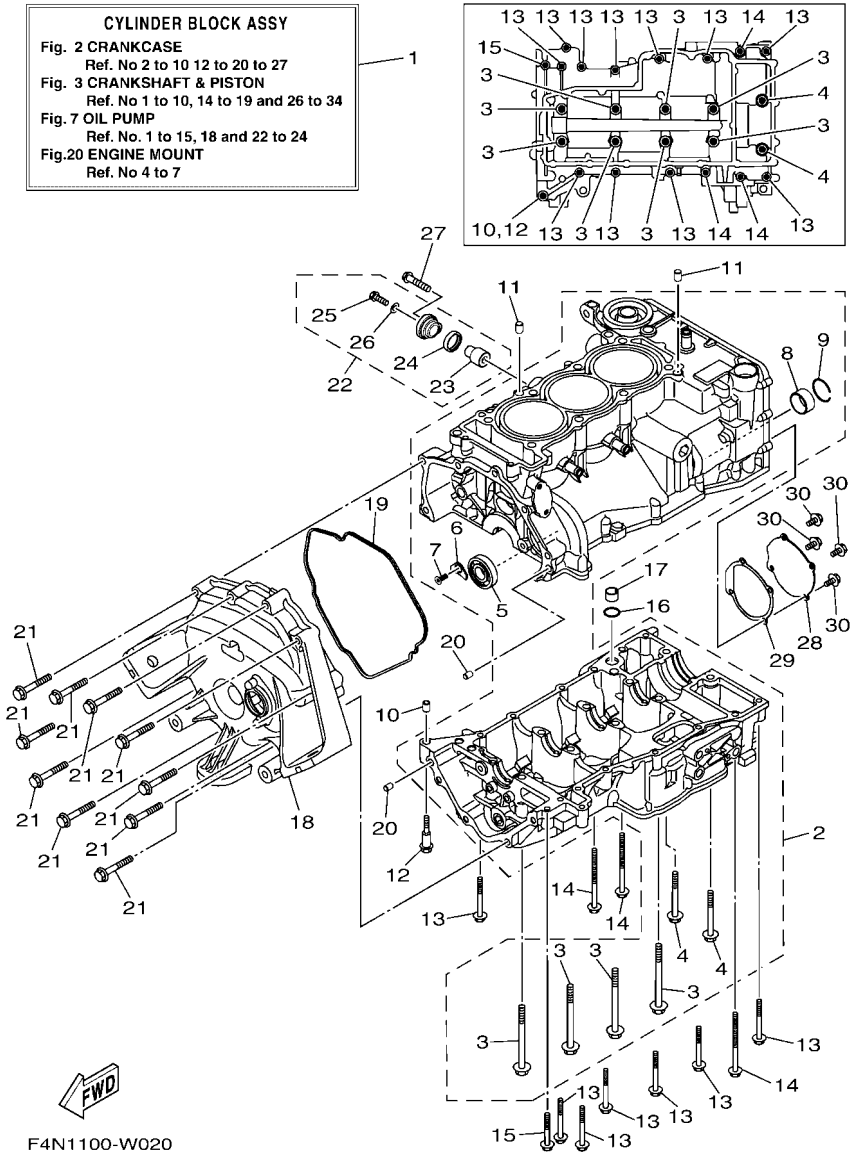

FIG. 2 CRANKCASE

REF. NO.	PART NO.	DESCRIPTION	F9L2					REMARKS
28	6EY–15589–01	PLATE	1					
29	6EY–15463–01	GASKET, 2	1					
30	95E34–06012	BOLT, FLANGE DEEP RECESS	4					

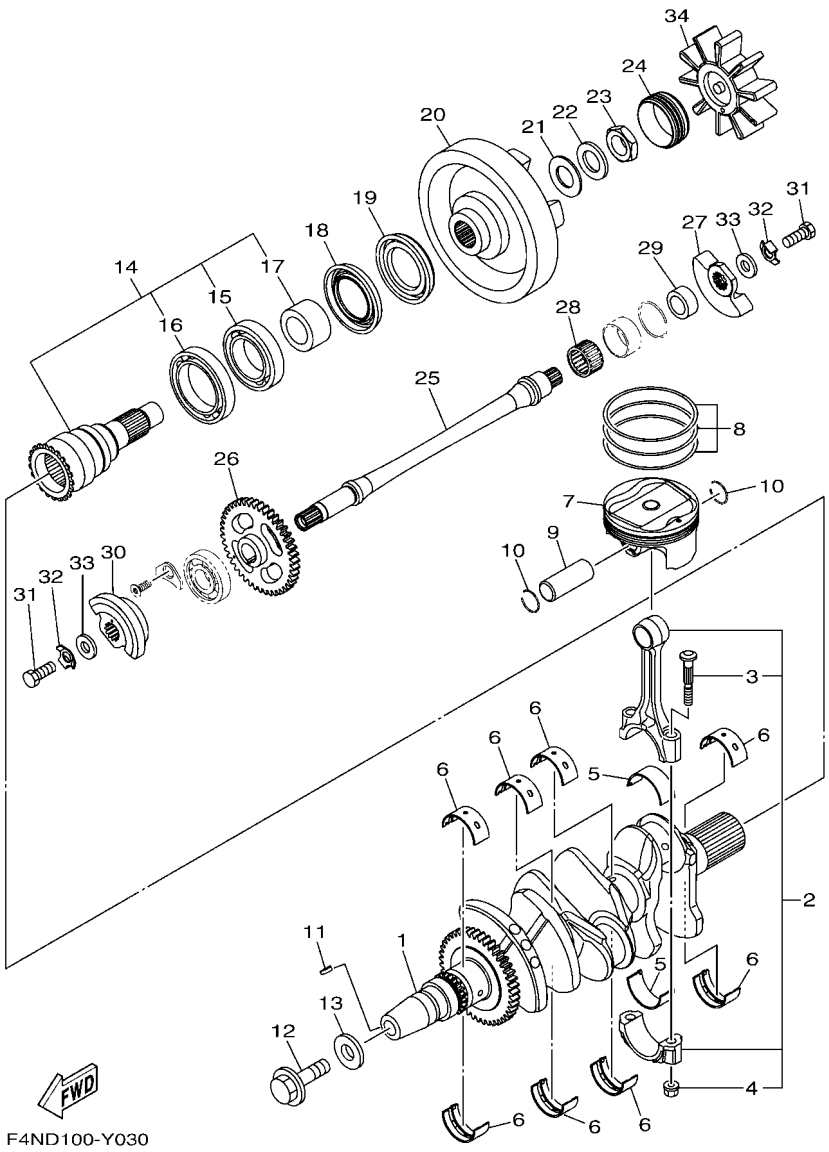

FIG. 3 CRANKSHAFT & PISTON

REF. NO.	PART NO.	DESCRIPTION	F9L2					REMARKS
1	6EY–11400–00	CRANKSHAFT ASSY	1					
2	B0F–11650–00	CONNECTING ROD ASSY	3					
3	5JW–11654–00	.BOLT, CONNECTING ROD	2					
4	90179–08327	.NUT	2					
5	5JW–11656–00	PLANE BEARING, CONNECTING ROD	6					UR BLUE
	5JW–11656–10	PLANE BEARING, CONNECTING ROD	6					UR BLACK
	5JW–11656–20	PLANE BEARING, CONNECTING ROD	6					UR BROWN
	5JW–11656–30	PLANE BEARING, CONNECTING ROD	6					UR GREEN
	5JW–11656–40	PLANE BEARING, CONNECTING ROD	6					UR YELLOW
	5JW–11656–50	PLANE BEARING, CONNECTING ROD	6					UR PINK
6	3LD–11416–10	PLANE BEARING, CRANKSHAFT 1	8					UR BLACK
	3LD–11416–20	PLANE BEARING, CRANKSHAFT 1	8					UR BROWN
	3LD–11416–30	PLANE BEARING, CRANKSHAFT 1	8					UR GREEN
	3LD–11416–40	PLANE BEARING, CRANKSHAFT 1	8					UR YELLOW
	3LD–11416–50	PLANE BEARING, CRANKSHAFT 1	8					UR PINK
	3LD–11416–60	PLANE BEARING, CRANKSHAFT 1	8					UR RED
	3LD–11416–70	PLANE BEARING, CRANKSHAFT 1	8					UR WHITE
7	8KH–11631–00	PISTON (STD)	3					
8	8KH–11603–02	PISTON RING SET (STD)	3					
9	6EY–11633–00	PIN, PISTON	3					
10	93450–19095	CIRCLIP	6					
11	90280–03045	KEY, WOODRUFF	1					
12	90105–12101	BOLT, FLANGE	1					
13	90201–121H0	WASHER, PLATE	1					
14	6EY–11406–10	SHAFT ASSY	1					
15	93306–00702	.BEARING	1					
16	93306–90901	.BEARING	1					

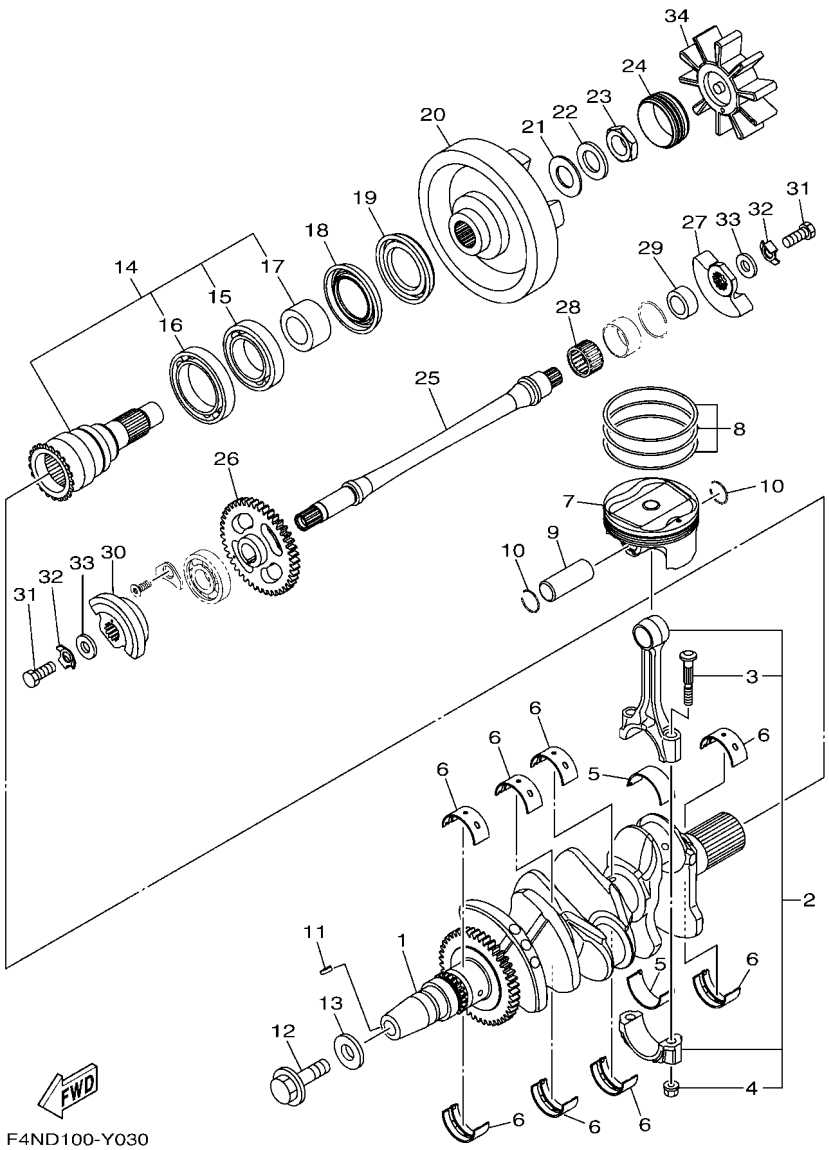

FIG. 3 CRANKSHAFT & PISTON

REF. NO.	PART NO.	DESCRIPTION	F9L2					REMARKS
17	6EY–11917–10	.COLLAR	1					
18	93101–40001	OIL SEAL	1					
19	93101–40002	OIL SEAL	1					
20	6JS–11571–00	FLYWHEEL	1					
21	90201–20030	WASHER, PLATE	1					
22	90208–20001	WASHER, CONICAL SPRING	1					
23	90179–20019	NUT	1					
24	6EY–45155–00	CAP	1					
25	2HC–11407–00	SHAFT ASSY., 2	1					
26	6EY–11531–00	GEAR, BALANCE WEIGHT	1					
27	8ES–11454–00	WEIGHT 1	1					
28	93310–42239	BEARING	1					
29	6EY–11478–00	COLLAR	1					
30	2HC–11464–00	WEIGHT 2	1					
31	97012–10025	BOLT	2					
32	90215–10003	WASHER, LOCK	2					
33	90201–10591	WASHER, PLATE	2					
34	6EY–4581J–00	RUBBER SHAFT COUPLING	1					

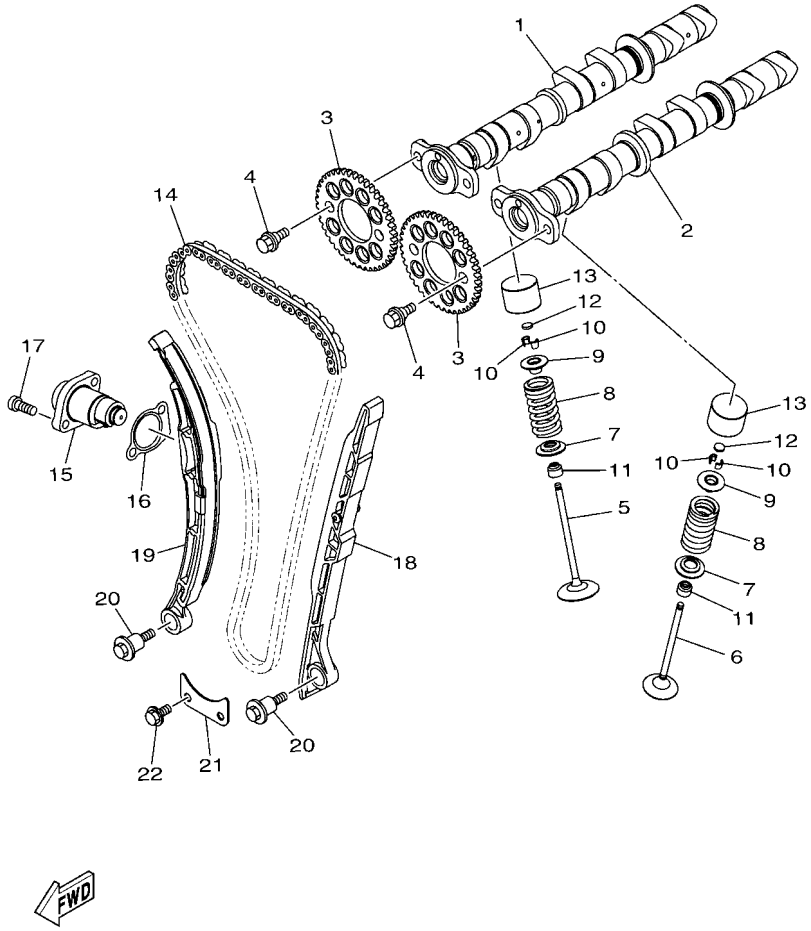

F4G1100-R040

FIG. 4 VALVE

REF. NO.	PART NO.	DESCRIPTION	F9L2					REMARKS
1	6EY–12170–00	CAMSHAFT ASSY 1	1					
2	6EY–12180–00	CAMSHAFT ASSY 2	1					
3	2HC–12176–00	SPROCKET, CAM CHAIN	2					
4	90105–07004	BOLT, FLANGE	4					
5	8GL–12111–10	VALVE, INTAKE	6					
6	8GL–12121–10	VALVE, EXHAUST	6					
7	1RC–12116–00	SEAT, VALVE SPRING	12					
8	8GL–12113–00	SPRING, VALVE INNER	12					
9	3D7–12117–00	RETAINER, VALVE SPRING	12					
10	1WG–12118–00	LOCK, VALVE SPRING RETAINER	24					
11	2HC–12119–00	SEAL, VALVE STEM	12					
12	1HX–12168–00	PAD, ADJUSTING 2 (1.20)	12					UR
	1HX–12168–20	PAD, ADJUSTING 2 (1.25)	12					UR
	1HX–12168–40	PAD, ADJUSTING 2 (1.30)	12					UR
	1HX–12168–60	PAD, ADJUSTING 2 (1.35)	12					UR
	1HX–12168–80	PAD, ADJUSTING 2 (1.40)	12					UR
	1HX–12168–A0	PAD, ADJUSTING 2 (1.45)	12					UR
	1HX–12168–F0	PAD, ADJUSTING 2 (1.50)	12					UR
	1HX–12168–H1	PAD, ADJUSTING 2 (1.55)	12					UR
	1HX–12168–K1	PAD, ADJUSTING 2 (1.60)	12					UR
	1HX–12168–M1	PAD, ADJUSTING 2 (1.65)	12					UR
	1HX–12168–R1	PAD, ADJUSTING 2 (1.70)	12					UR
	1HX–12168–U1	PAD, ADJUSTING 2 (1.75)	12					UR
	1HX–12168–W1	PAD, ADJUSTING 2 (1.80)	12					UR
	1HX–12168–Y1	PAD, ADJUSTING 2 (1.85)	12					UR
	1HX–12169–11	PAD, ADJUSTING 2 (1.90)	12					UR
	1HX–12169–31	PAD, ADJUSTING 2 (1.95)	12					UR

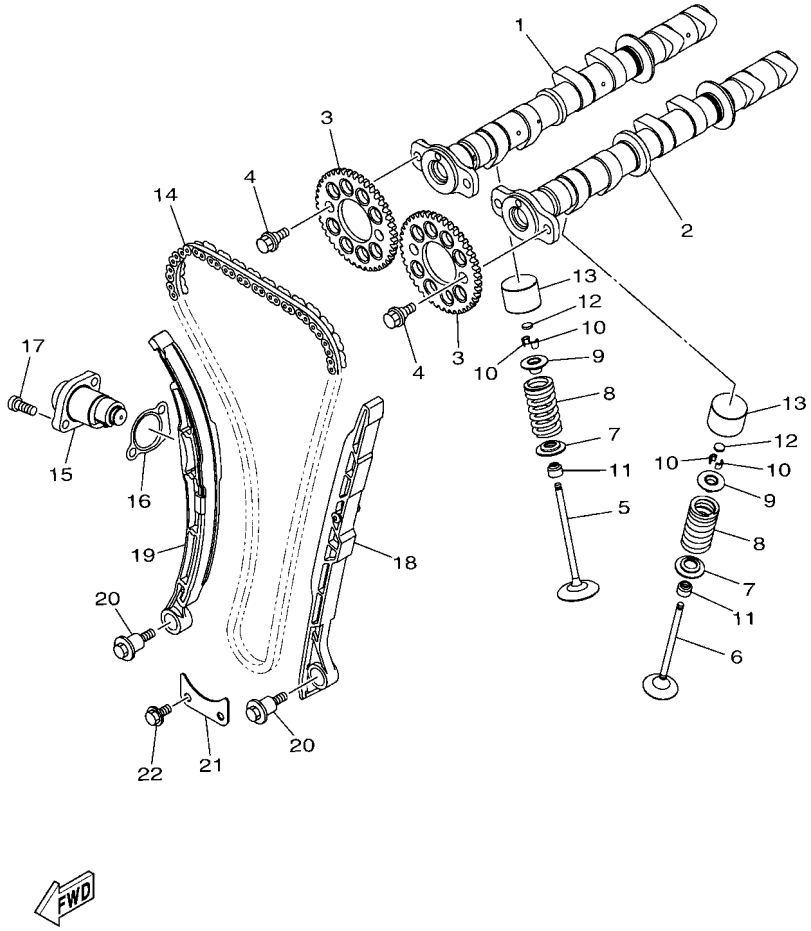

F4G1100-R040

FIG. 4 VALVE

REF. NO.	PART NO.	DESCRIPTION	F9L2					REMARKS
12	1HX–12169–50	PAD, ADJUSTING 2 (2.00)	12					UR
	1HX–12169–70	PAD, ADJUSTING 2 (2.05)	12					UR
	1HX–12169–90	PAD, ADJUSTING 2 (2.10)	12					UR
	1HX–12169–E0	PAD, ADJUSTING 2 (2.15)	12					UR
	1HX–12169–G0	PAD, ADJUSTING 2 (2.20)	12					UR
	1HX–12169–J0	PAD, ADJUSTING 2 (2.25)	12					UR
	1HX–12169–L0	PAD, ADJUSTING 2 (2.30)	12					UR
	1HX–12169–N0	PAD, ADJUSTING 2 (2.35)	12					UR
	1HX–12169–T0	PAD, ADJUSTING 2 (2.40)	12					UR
13	6EY–12153–01	LIFTER, VALVE	12					
14	94591–57140	CHAIN (98RH2010-140M)	1					
15	8KH–12210–00	TENSIONER ASSY, CAM CHAIN	1					
16	2C0–12213–00	GASKET, TENSIONER CASE	1					
17	90110–06274	BOLT, HEXAGON SOCKET HEAD	2					
18	6EY–12251–00	DAMPER, CHAIN 1	1					
19	2HC–12252–00	DAMPER, CHAIN 2	1					
20	90109–06295	BOLT	2					
21	6EY–12279–00	PLATE	1					
22	95812–06012	BOLT, FLANGE	2					

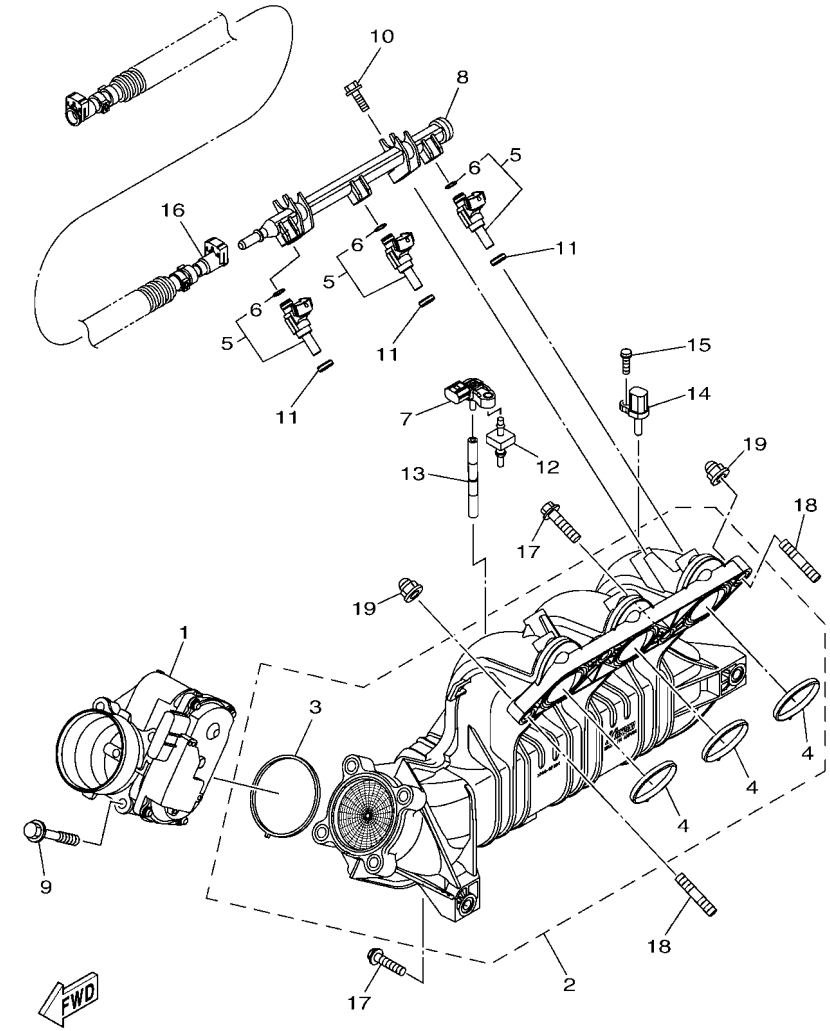

F3Y7100-T050

FIG. 5 INTAKE

REF. NO.	PART NO.	DESCRIPTION	F9L2					REMARKS
1	6EY–13750–01	THROTTLE BODY ASSY	1					
2	6EY–13641–03	MANIFOLD, INTAKE 1	1					
3	6EY–14156–00	.GASKET, INSULATING	1					
4	6EY–14126–00	.GASKET	3					
5	2HC–13761–00	INJECTOR	3					
6	68V–1416A–00	.O-RING	1					
7	5S7–82380–00	SENSOR, PRESSURE	1					
8	6EY–12880–01	DELIVERY PIPE	1					
9	90105–08243	BOLT, FLANGE	4					
10	95814–06020	BOLT, FLANGE	2					
11	8FP–13556–10	GASKET, MANIFOLD	3					
12	6BH–14445–00	GROMMET	1					
13	6EY–13532–00	HOSE, VACUUM SENSING 3	1					
14	8FP–85886–00	SENSOR, AIR TEMPERATURE	1					
15	97702–50520	SCREW, TAPPING	1					
16	6JS–2450B–00	FUEL HOSE ASSY	1					
17	97513–08535	BOLT, WITH WASHER	4					
18	95612–08625	BOLT, STUD	2					
19	90176–08080	NUT, CAP	2					

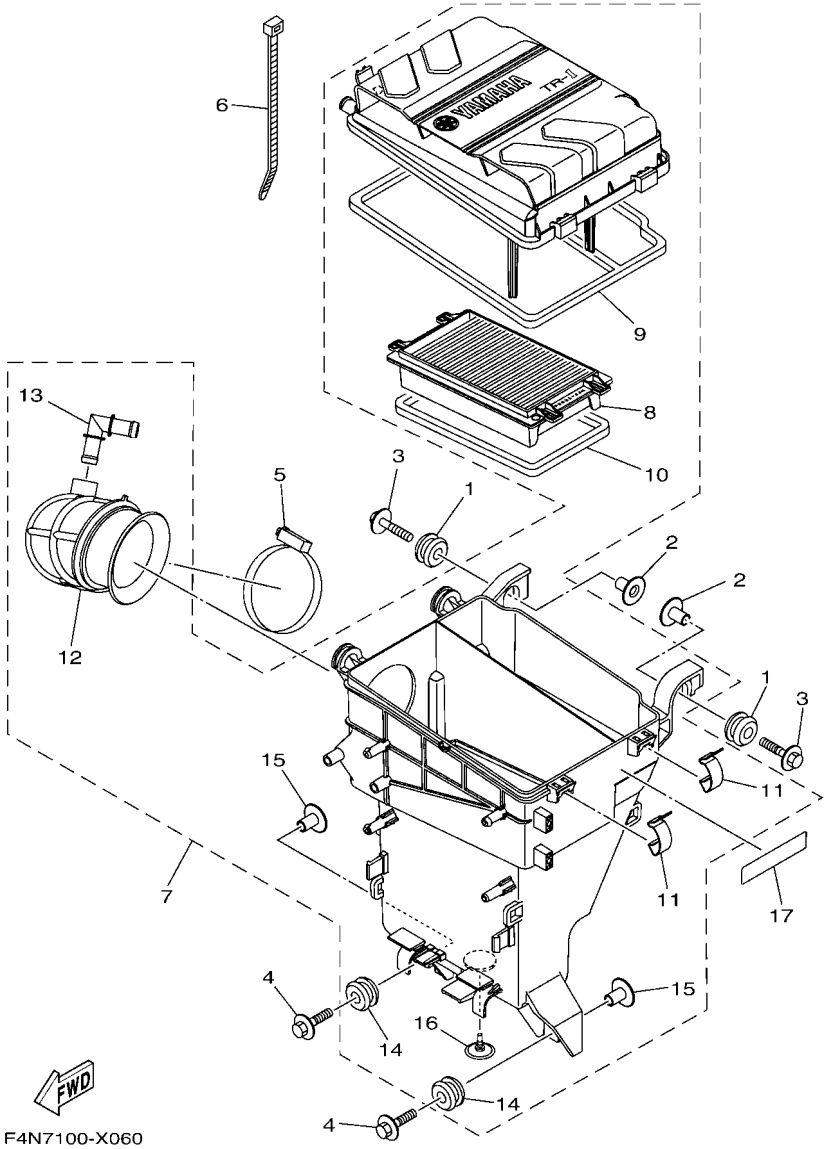

FIG. 6 INTAKE 2

REF. NO.	PART NO.	DESCRIPTION	F9L2					REMARKS
1	90480–22M15	GROMMET	2					
2	90387–08M37	COLLAR	2					
3	90119–08169	BOLT, WITH WASHER	2					
4	90119–08187	BOLT, WITH WASHER	2					
5	90450–90002	HOSE CLAMP ASSY	1					
6	90465–13M18	CLAMP	1					
7	6EY–14410–10	AIR CLEANER ASSY.	1					
8	6EY–14451–00	.ELEMENT, AIR CLEANER	1					
9	6EY–14462–00	.SEAL	1					
10	6EY–14452–00	.SEAL	1					
11	6EY–14436–00	.HOOK	2					
12	6EY–14419–00	.PIPE	1					
13	6EY–14485–00	.PIPE, JOINT	1					
14	90480–22M15	.GROMMET	2					
15	90387–08M37	.COLLAR	2					
16	6EY–14470–01	.VALVE	1					
17	60E–83627–00	LABEL, CAUTION 7	1					

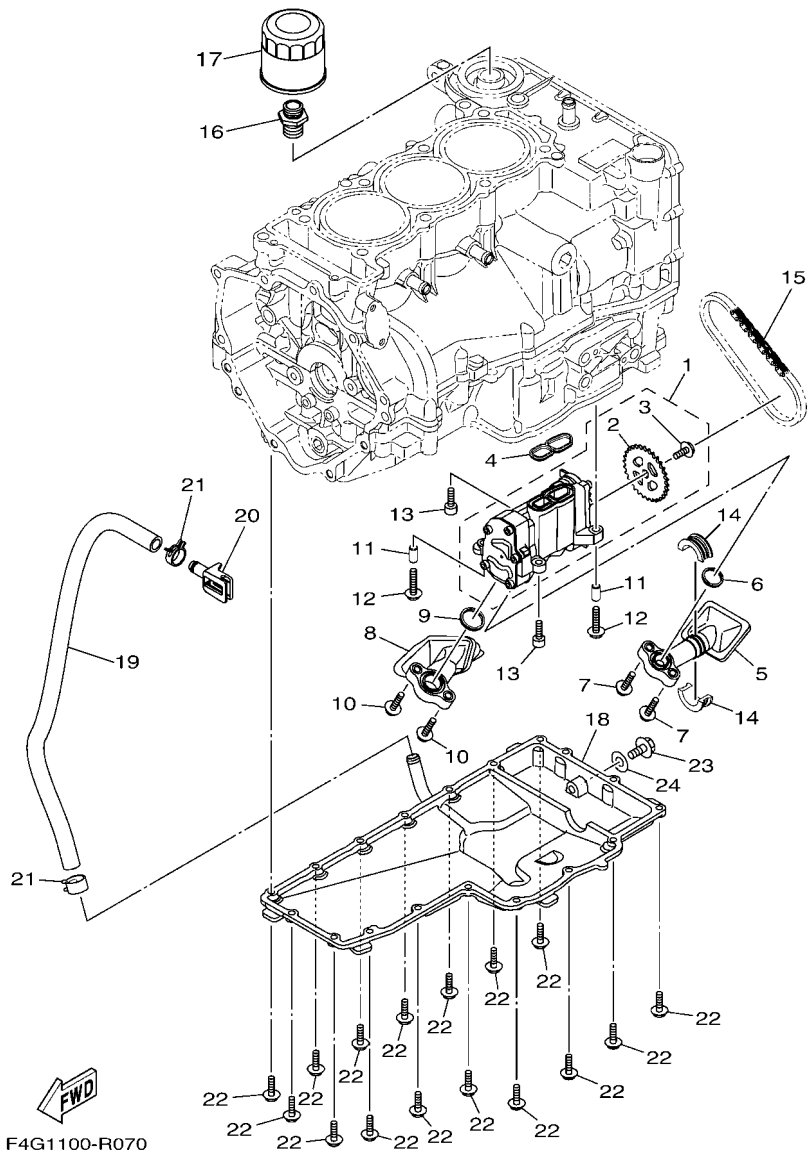

FIG. 7 OIL PUMP

REF. NO.	PART NO.	DESCRIPTION	F9L2					REMARKS
1	6EY–13300–00	OIL PUMP ASSY	1					
2	6EY–13355–00	.SPROCKET, DRIVEN	1					
3	90149–06190	.SCREW	1					
4	6EY–13563–00	GASKET	1					
5	6EY–13405–00	OIL PIPE COMP. 1	1					
6	6EY–13477–00	GASKET	1					
7	90110–06172	BOLT, HEXAGON SOCKET HEAD	2					
8	6EY–13406–00	OIL PIPE COMP. 2	1					
9	6EY–13476–00	GASKET	1					
10	90110–06172	BOLT, HEXAGON SOCKET HEAD	2					
11	99530–08016	PIN, DOWEL	2					
12	90110–06287	BOLT, HEXAGON SOCKET HEAD	2					
13	90110–06335	BOLT, HEXAGON SOCKET HEAD	2					
14	6EY–15486–00	GROMMET	2					
15	94580–25060	CHAIN (DID25 60LE)	1					
16	90401–20008	BOLT, UNION	1					
17	5GH–13440–90	ELEMENT ASSY, OIL CLEANER	1					
18	6EY–13417–11	COVER, STRAINER	1					
19	90445–18M06	HOSE (L500)	1					
20	6EY–13455–00	PLUG	1					
21	90467–170A5	CLIP	2					
22	95E34–06020	BOLT, FLANGE DEEP RECESS	18					
23	95814–08020	BOLT, FLANGE	1					
24	90430–08209	GASKET	1					

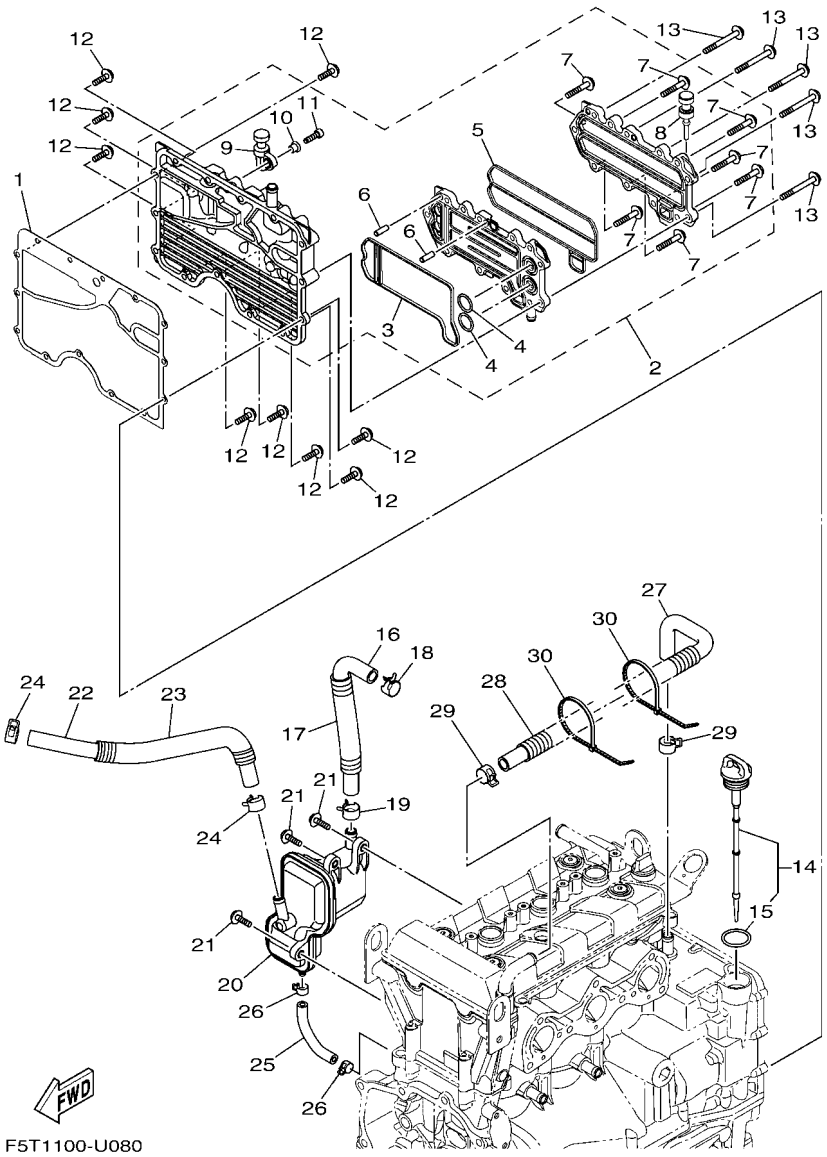

F5T1100-U080

FIG. 8 OIL COOLER

REF. NO.	PART NO.	DESCRIPTION	F9L2					REMARKS
1	6EY–15453–01	GASKET	1					
2	6EY–13470–03	OIL COOLER ASSY	1					
3	6EY–13556–10	.GASKET, MANIFOLD	1					
4	93210–19522	.O-RING	2					
5	6EY–13557–10	.GASKET	1					
6	93606–19M23	.PIN, DOWEL	2					
7	95814–06035	.BOLT, FLANGE	7					
8	90480–06M46	.GROMMET	1					
9	6S5–81364–11	.GROMMET	1					
10	90387–06M05	.COLLAR	1					
11	91380–06020	.BOLT	1					
12	95814–06020	BOLT, FLANGE	9					
13	95814–06055	BOLT, FLANGE	5					
14	6EY–15362–10	PLUG, OIL LEVEL	1					
15	93210–24M79	.O-RING	1					
16	6EY–11166–10	PIPE, BREATHER 1	1					
17	90447–19004	HOSE, WITH SPRING (L130)	1					
18	90467–200A3	CLIP	1					
19	90467–170A4	CLIP	1					
20	6EY–11164–00	SEPERATOR, OIL	1					
21	90105–06M15	BOLT, FLANGE	3					
22	90445–18020	HOSE (L420)	1					
23	90446–24MF4	HOSE (L350)	1					
24	90467–170A4	CLIP	2					
25	6EY–11125–00	PIPE, BREATHER 4	1					
26	90467–110A1	CLIP	2					
27	6EY–11126–10	PIPE, BREATHER 3	1					

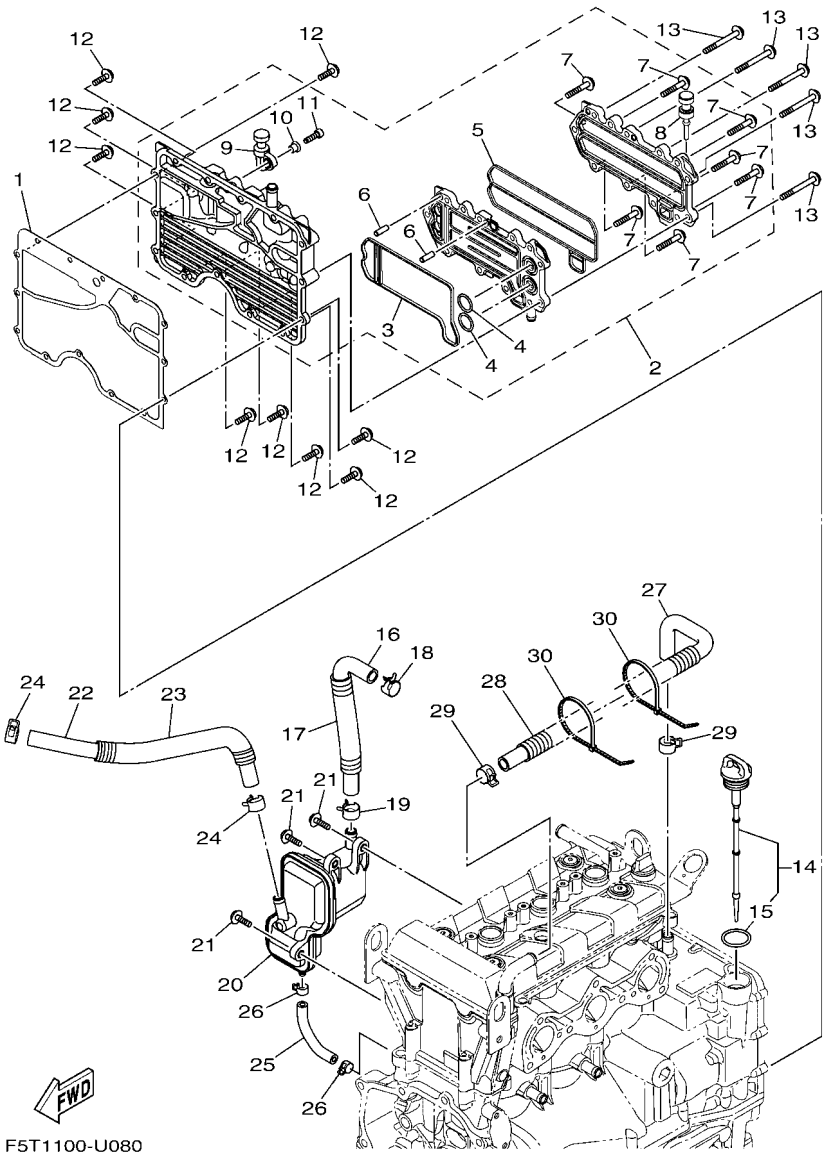

FIG. 8 OIL COOLER

REF. NO.	PART NO.	DESCRIPTION	F9L2					REMARKS
28	90447–19014	TUBE (L300)	1					
29	90467–170A4	CLIP	2					
30	90464–35132	CLAMP	2					

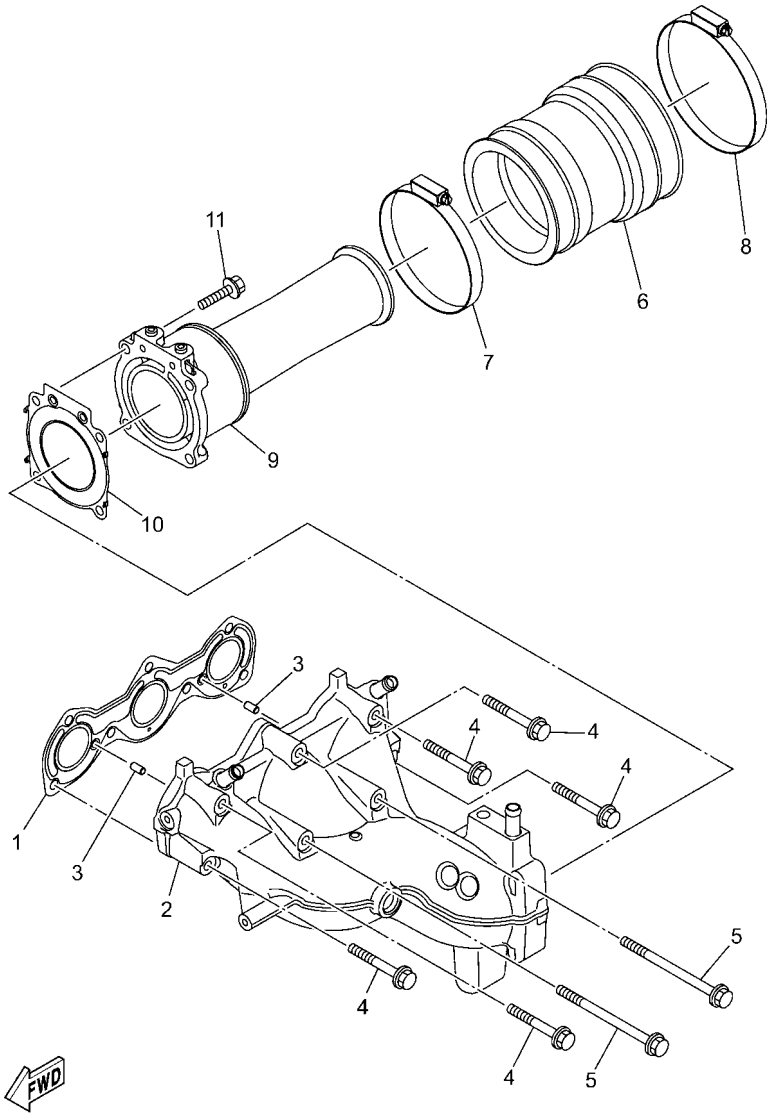

F9L3100-1090

FIG. 9 EXHAUST 1

REF. NO.	PART NO.	DESCRIPTION	F9L2					REMARKS
1	6GA–14613–00	GASKET, EXHAUST PIPE	1					
2	6JS–14711–00	MUFFLER 1	1					
3	93606–12019	PIN, DOWEL	2					
4	90119–08034	BOLT, WITH WASHER	5					
5	90119–08097	BOLT, WITH WASHER	2					
6	6S5–E4752–01	PIPE, OUTLET	1					
7	90450–99808	HOSE CLAMP ASSY	1					
8	90450–99809	HOSE CLAMP ASSY	1					
9	6EY–14784–00	PIPE, TAIL	1					
10	6JS–14749–00	GASKET, MUFFLER DAMPER 2	1					
11	6EY–14719–00	BOLT, MUFFLER	4					

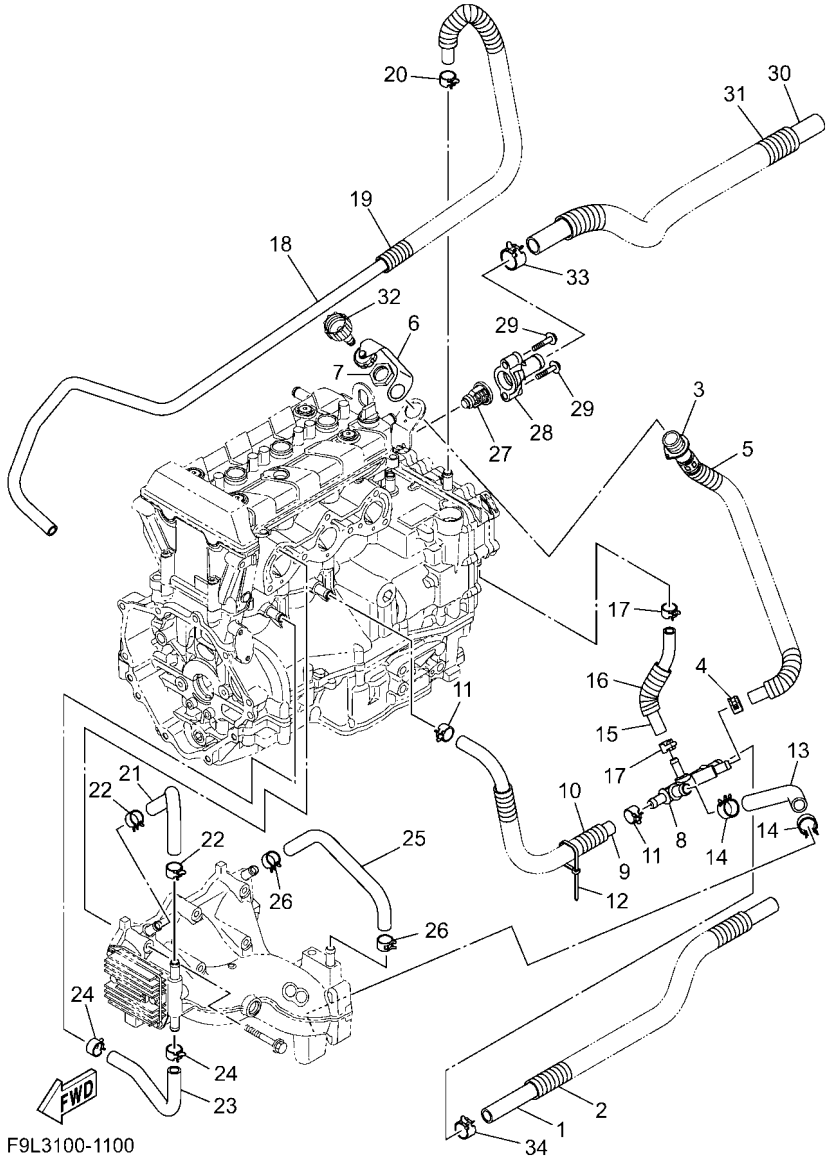

F9L3100-1100

FIG. 10 EXHAUST 2

REF. NO.	PART NO.	DESCRIPTION	F9L2					REMARKS
1	6EY–E243E–00	HOSE 2	1					
2	J0B–F125J–00	PIPE, DRAIN	1					
3	6EY–12580–00	JOINT ASSY	1					
4	90467–150A5	CLIP	1					
5	90446–24M89	HOSE (L420)	1					
6	6EY–84385–00	CAP,1	1					
7	EU0–61652–00	NUT	1					
8	6EY–12584–00	JOINT, HOSE 3	1					
9	90445–18012	HOSE (L400)	1					
10	90447–19014	TUBE (L300)	1					
11	90467–160A0	CLIP	2					
12	90464–35132	CLAMP	1					
13	6JS–12589–00	HOSE 6	1					
14	90467–200A4	CLIP	2					
15	90445–16019	HOSE (L160)	1					
16	90446–24M44	HOSE (L70)	1					
17	90467–141A3	CLIP	2					
18	90445–16020	HOSE (L1600)	1					
19	6EY–24864–00	TUBE	1					
20	90467–160A0	CLIP	1					
21	6EY–12577–00	HOSE 2	1					
22	90467–160A0	CLIP	2					
23	6S5–12579–00	HOSE 4	1					
24	90467–160A0	CLIP	2					
25	90445–18022	HOSE (L260)	1					
26	90467–160A0	CLIP	2					
27	6D3–12411–00	THERMOSTAT	1					

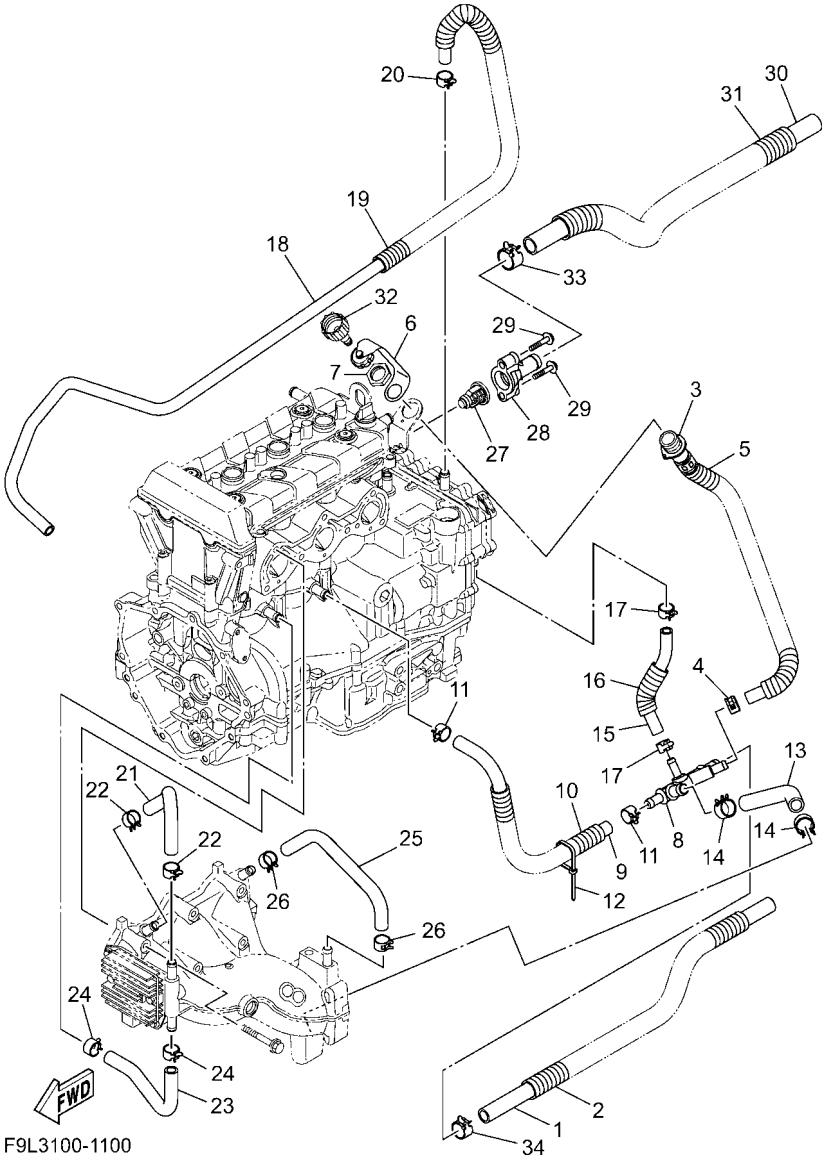

F9L3100-1100

FIG. 10 EXHAUST 2

REF. NO.	PART NO.	DESCRIPTION	F9L2					REMARKS
28	6EY–12413–00	COVER, THERMOSTAT	1					
29	90105–06035	BOLT, FLANGE	2					
30	6EY–E243A–00	HOSE 1	1					
31	F4G–U773D–10	TUBE	1					
32	67X–E2590–00	CONDUCTION ASSY	1					FOR CAN
	67X–E2590–10	CONDUCTION ASSY	1					FOR EUR
33	90467–240A0	CLIP	1					
34	90467–200A3	CLIP	1					

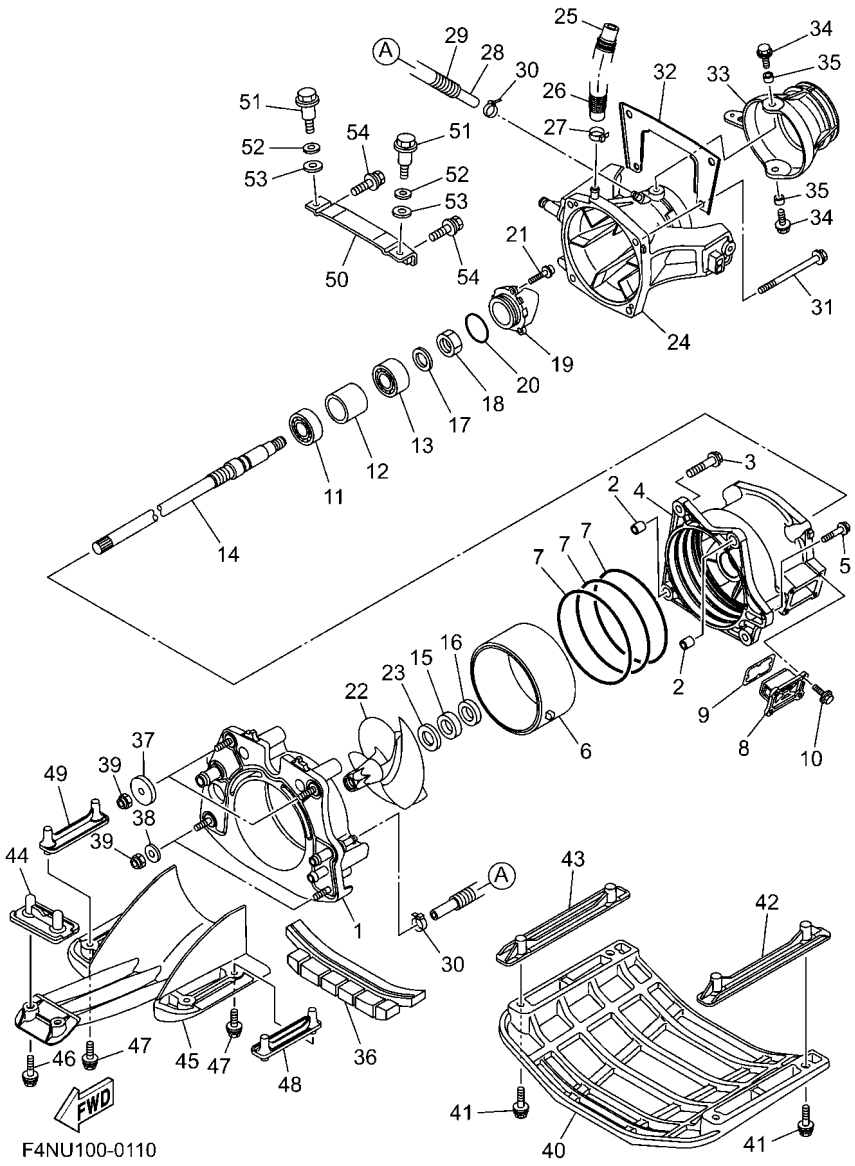

FIG. 11 JET UNIT 1

REF. NO.	PART NO.	DESCRIPTION	F9L2					REMARKS
1	6CS–G5831–21	PLATE, TRANSOM	1					
2	99590–14016	PIN, DOWEL	2					
3	90119–10810	BOLT, WITH WASHER	4					
4	6EY–R1312–11	HOUSING, IMPELLER	1					
5	90119–06893	BOLT, WITH WASHER	1					
6	6HH–R1337–00	SLEEVE, IMPELLER	1					
7	93211–65801	O-RING	3					
8	6GN–G6882–00	FILTER	1					
9	66V–42414–00	O-RING	1					
10	90119–06889	BOLT, WITH WASHER	4					
11	93306–206Y7	BEARING	1					
12	6CS–G5538–00	SPACER 1	1					
13	93306–355Y0	BEARING	1					
14	6JS–G5511–00	SHAFT, DRIVE	1					
15	93101–28M66	OIL SEAL	1					
16	93101–28002	OIL SEAL	1					
17	92990–20600	WASHER	1					
18	95312–20700	NUT	1					
19	6AN–R1326–00	CAP	1					
20	93210–54010	O-RING	1					
21	90110–06822	BOLT, HEXAGON SOCKET HEAD	3					
22	6JS–R1321–00	IMPELLER	1					
23	6EY–R1348–00	SPACER	1					
24	6JS–R1318–00	NOZZLE	1					
25	6CN–U72M2–00	HOSE 1	1					
26	90446–24M46	HOSE (L175)	1					
27	90601–118UF	BAND, HOSE 18	1					

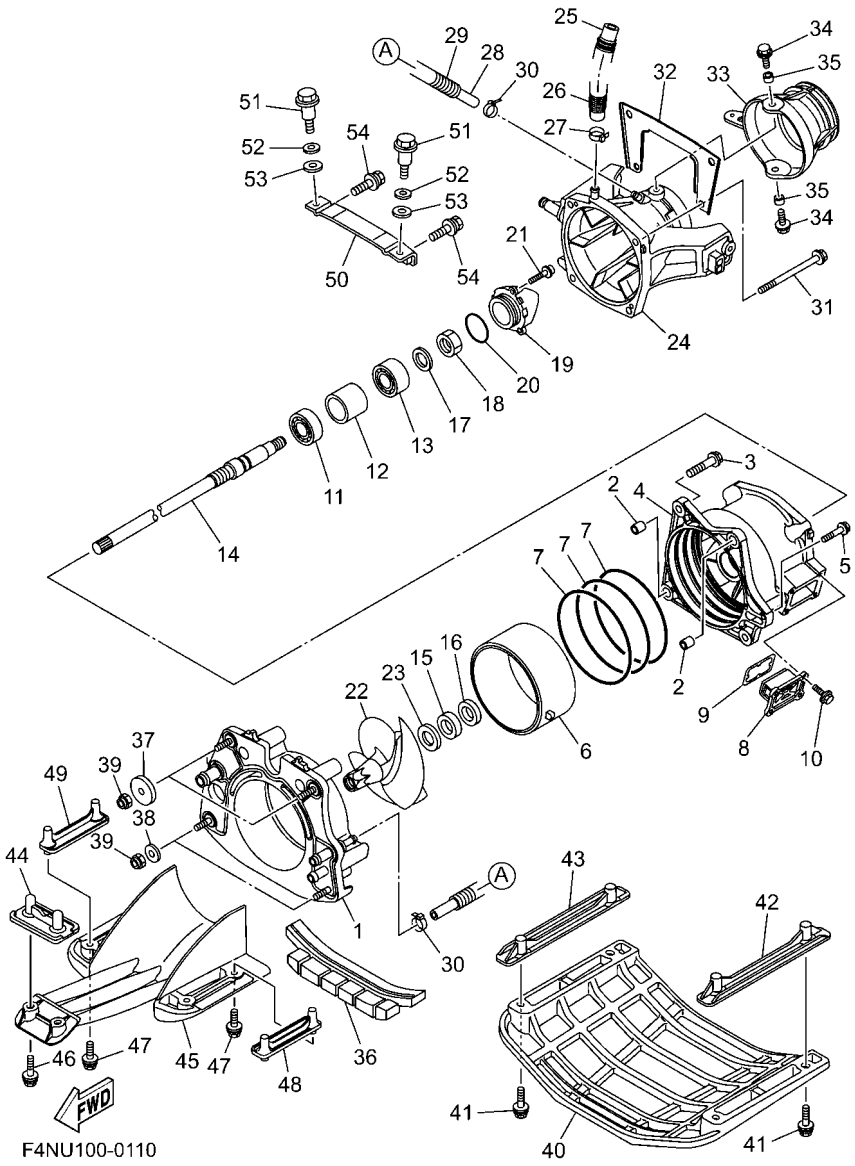

FIG. 11 JET UNIT 1

REF. NO.	PART NO.	DESCRIPTION	F9L2					REMARKS
28	90445–14807	HOSE (L355)	1					
29	90446–20MF5	HOSE (L320)	1					
30	90465–11829	CLAMP	2					
31	90119–10810	BOLT, WITH WASHER	4					
32	6EY–R1959–00	BRACKET	1					
33	6EX–R1313–00	NOZZLE, DEFLECTOR	1					
34	90119–08840	BOLT, WITH WASHER	2					
35	90387–08M06	COLLAR	2					
36	F2X–U72C0–00	SPACER	1					
37	F1S–U725E–01	WASHER	2					
38	90201–10801	WASHER, PLATE	2					
39	9572R–10300	NUT, NYLON	4					
40	F4N–U273B–00	PLATE 2	1					
41	F4P–U3222–00	BOLT	4					
42	F2X–U8572–00	BRACKET 2	1					
43	F2X–U8572–00	BRACKET 2	1					
44	F2S–U8577–00	BRACKET, 3	1					
45	6EX–R1333–00	SCREEN, INTAKE	1					
46	90119–08823	BOLT, WITH WASHER	2					
47	90119–08827	BOLT, WITH WASHER	4					
48	F3P–U8571–00	BRACKET 1	1					
49	F3P–U8571–00	BRACKET 1	1					
50	F2C–U7557–01	BRACKET	1					
51	90109–08041	BOLT	2					
52	92990–12200	WASHER, PLAIN	2					
53	90430–12002	GASKET	2					
54	90119–089U7	BOLT, WITH WASHER	2					

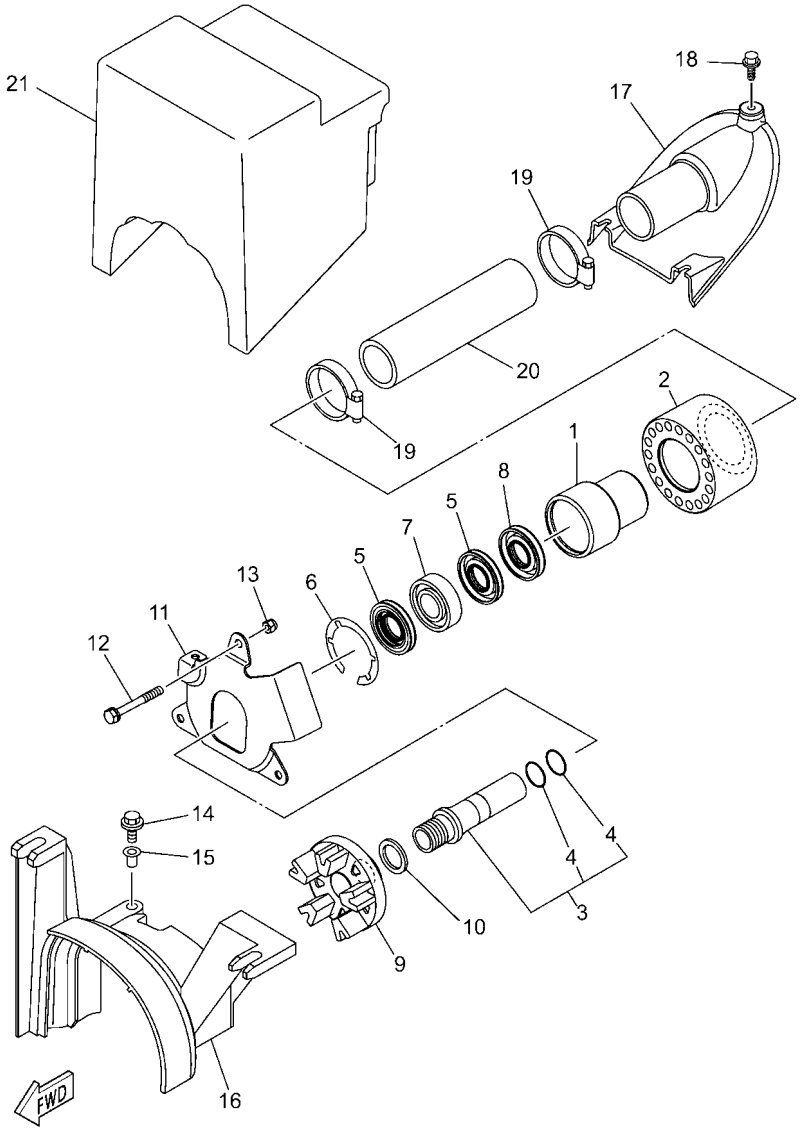

F9L5100-1120

FIG. 12 JET UNIT 2

REF. NO.	PART NO.	DESCRIPTION	F9L2					REMARKS
1	6JF–G5332–00	HOUSING, BEARING	1					
2	6GA–G5235–00	DAMPER	1					
3	60E–XR132–01	SLEEVE SET	1					
4	93210–19812	.O-RING	2					
5	93101–25M55	OIL SEAL	2					
6	99009–52500	CIRCLIP	1					
7	93306–205XG	BEARING	1					
8	93101–24001	OIL SEAL	1					
9	6EY–G5593–00	FLANGE, COUPLING 1	1					
10	90201–27800	WASHER, PLATE	1					
11	6JF–G5321–00	PLATE	1					
12	90119–069UX	BOLT, WITH WASHER	3					
13	9572R–06300	NUT, NYLON	3					
14	90119–06891	BOLT, WITH WASHER	1					
15	90387–06289	COLLAR	1					
16	6EY–R1381–00	COVER	1					
17	F2N–U883E–00	JOINT, PIPE	1					
18	90109–06832	BOLT	3					
19	90601–155U4	BAND, HOSE 55	2					
20	F2M–U883B–00	PIPE 1	1					
21	F1K–U892D–00	FLOTATION, STERN	1					

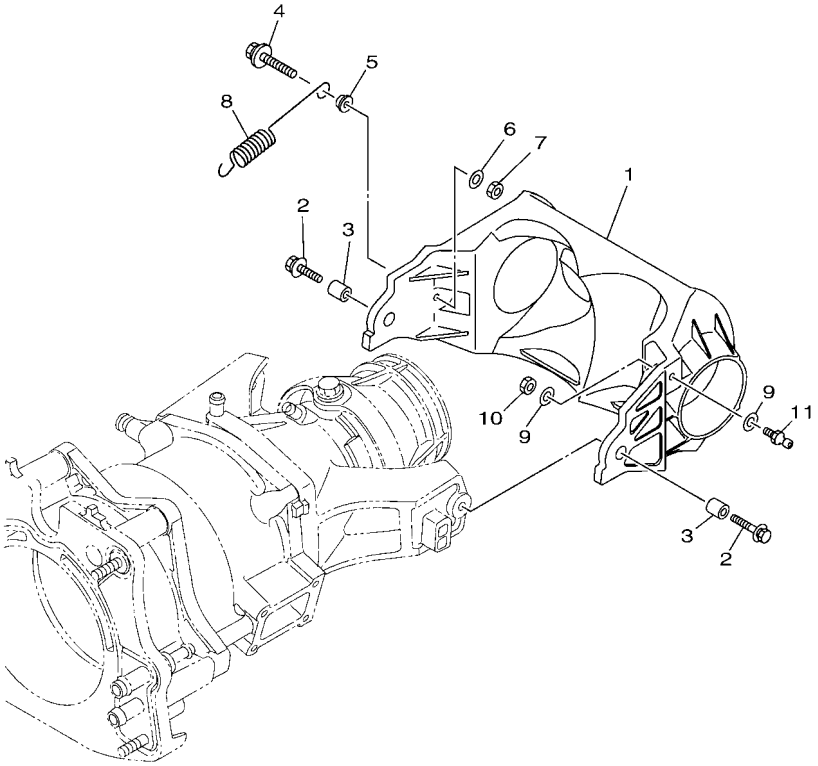

F4N1100-W130

FIG. 13 JET UNIT 3

REF. NO.	PART NO.	DESCRIPTION	F9L2					REMARKS
1	6ET–R1314–10	GATE, REVERSE	1					
2	90119–08840	BOLT, WITH WASHER	2					
3	90387–08M30	COLLAR	2					
4	90119–069UX	BOLT, WITH WASHER	1					
5	90387–06319	COLLAR	1					
6	90201–06801	WASHER, PLATE	1					
7	95380–06600	NUT, HEXAGON	1					
8	6S5–R2358–00	SPRING, RETAINER	1					
9	90201–06801	WASHER, PLATE	2					
10	95380–06600	NUT, HEXAGON	1					
11	6GA–U1461–10	STUD, JOINT BALL	1					

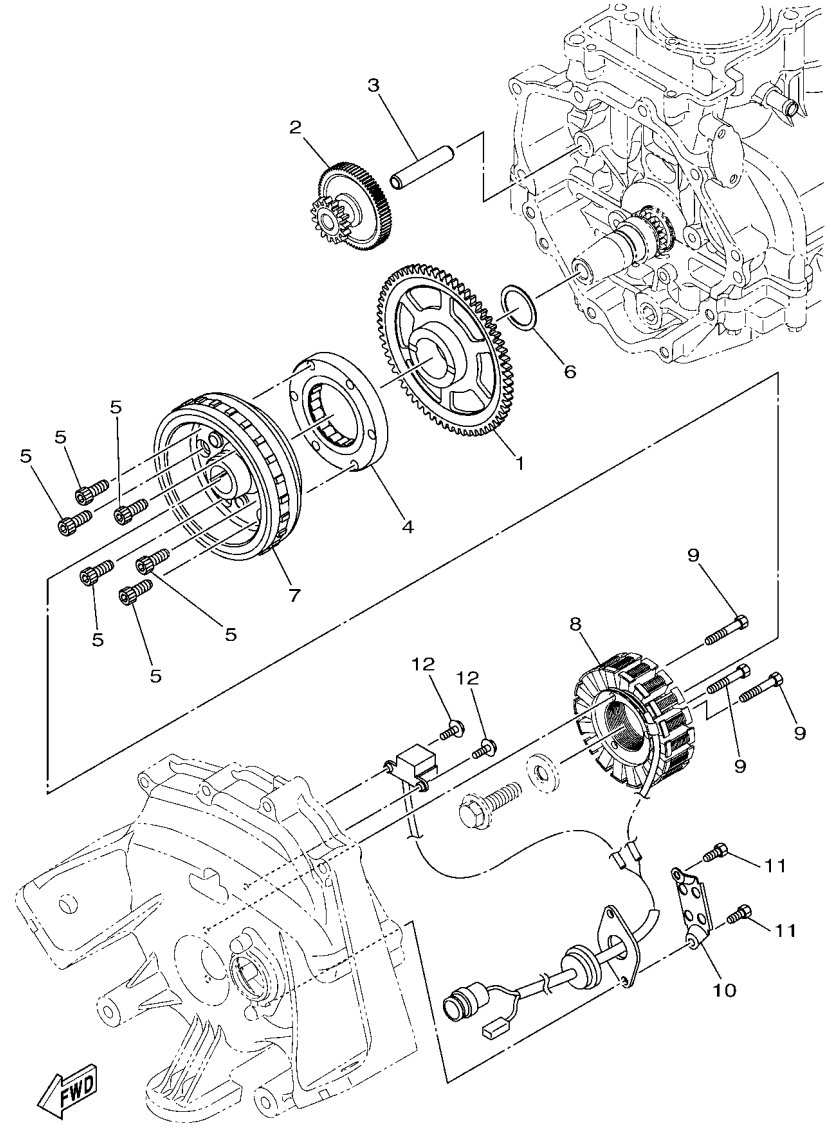

F4G1100-R140

FIG. 14 GENERATOR

REF. NO.	PART NO.	DESCRIPTION	F9L2					REMARKS
1	8FA–15515–00	GEAR 3	1					
2	2HC–15512–00	GEAR, IDLER 1	1					
3	8ES–15521–00	SHAFT 1	1					
4	6EY–15590–00	STARTER ONE-WAY ASSY	1					
5	90110–08212	BOLT, HEXAGON SOCKET HEAD	6					
6	90201–30013	WASHER, PLATE	1					
7	6EY–81450–01	ROTOR ASSY	1					
8	6EY–81410–02	STATOR ASSY	1					
9	91317–06035	BOLT, HEXAGON SOCKET HEAD	3					
10	60E–81328–00	CLAMP	1					
11	91317–06014	BOLT, HEXAGON SOCKET HEAD	2					
12	97513–05514	BOLT, WITH WASHER	2					

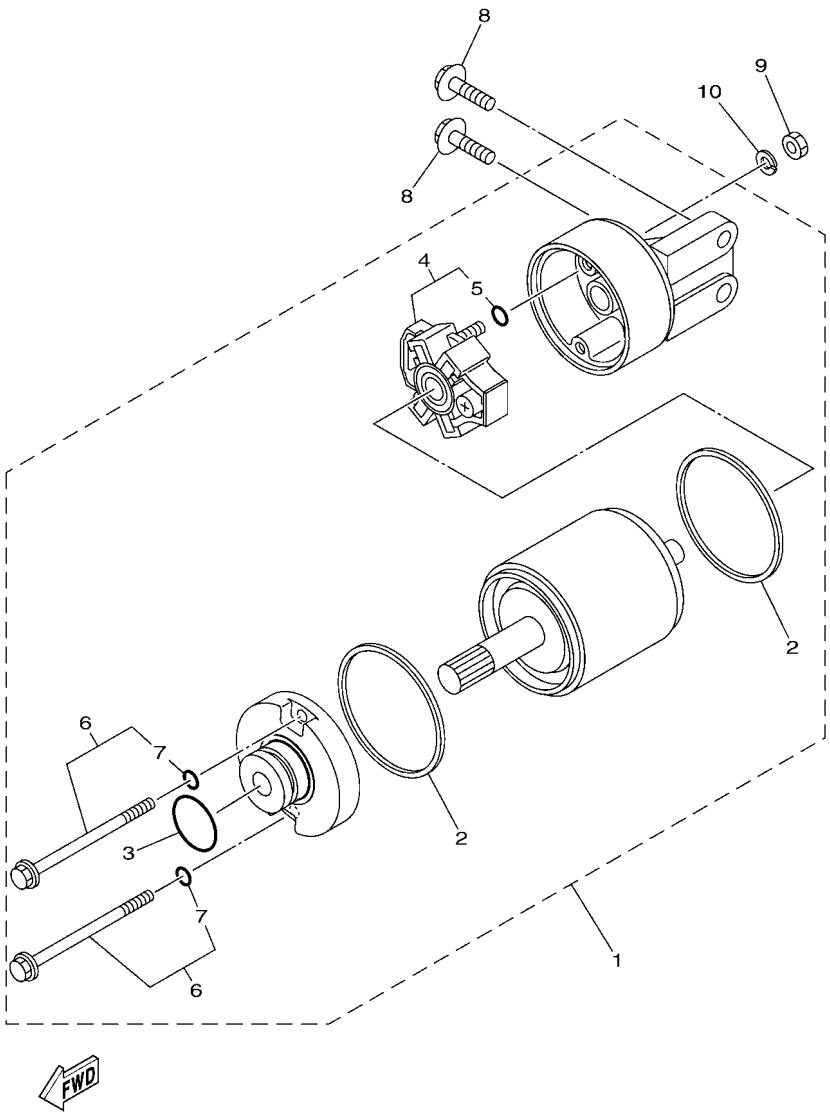

FIG. 15 STARTING MOTOR

REF. NO.	PART NO.	DESCRIPTION	F9L2					REMARKS
1	6EY–81800–00	STARTING MOTOR ASSY	1					
2	11H–81844–00	.GASKET	2					
3	1FK–81847–00	.O-RING	1					
4	6EY–81840–00	.BRUSH HOLDER ASSY	1					
5	3TB–81847–00	..O-RING	1					
6	6EY–81826–00	.BOLT	2					
7	3TB–81847–00	..O-RING	1					
8	97513–08530	BOLT, WITH WASHER	2					
9	95380–06700	NUT	1					
10	92990–06100	WASHER, SPRING	1					

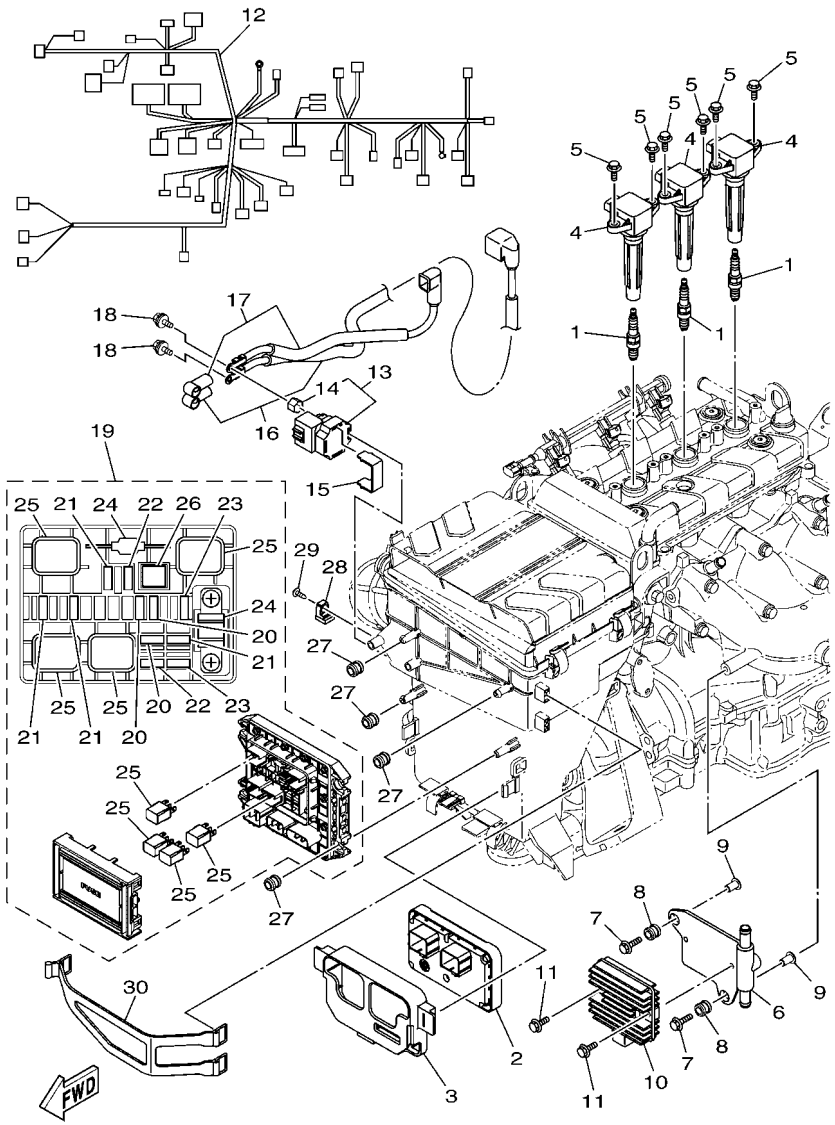

F4N7100-X160

FIG. 16 ELECTRICAL 1

REF. NO.	PART NO.	DESCRIPTION	F9L2					REMARKS
1	94702–00409	PLUG, SPARK (NGK CR9EB)	3					
2	6JS–8591A–00	ENGINE CONTROL UNIT ASSY	1					
3	6EY–8591S–00	GROMMET, ECU	1					
4	6EX–82310–02	IGNITION COIL ASSY	3					
5	95880–06016	BOLT, FLANGE	6					
6	6JS–81975–00	PLATE, RECTIFIER FITTING	1					
7	90119–06311	BOLT, WITH WASHER	2					
8	6A0–82317–01	DAMPER, IGNITION COIL	2					
9	90387–06119	COLLAR	2					
10	6D3–81960–01	RECTIFIER & REGULATOR ASSY	1					
11	95814–06020	BOLT, FLANGE	2					
12	6JS–8259L–20	WIRE HARNESS ASSY 1	1					
13	6EY–81940–09	STARTER RELAY ASSY	1					
14	6EY–82355–00	.GROMMET	1					
15	6EY–81953–00	STAY, RELAY	1					
16	6JS–82115–00	WIRE, PLUS LEAD	1					
17	6EY–82117–00	WIRE, LEAD	1					
18	97E95–06612	BOLT, HEXAGON W/W DEEP RECESS	2					
19	6EX–82170–02	FUSE BOX ASSY	1					
20	67F–82151–30	.FUSE (3A)	3					
21	67F–82151–40	.FUSE (10A)	4					
22	67F–82151–00	.FUSE (20A)	2					
23	67F–82151–10	.FUSE (30A)	2					
24	6EX–82151–00	.FUSE (50A)	2					
25	6EX–8195A–00	.RELAY ASSY	4					
26	6EX–2812A–00	.PULLER, FUSE	1					
27	6A0–82317–01	DAMPER, IGNITION COIL	4					

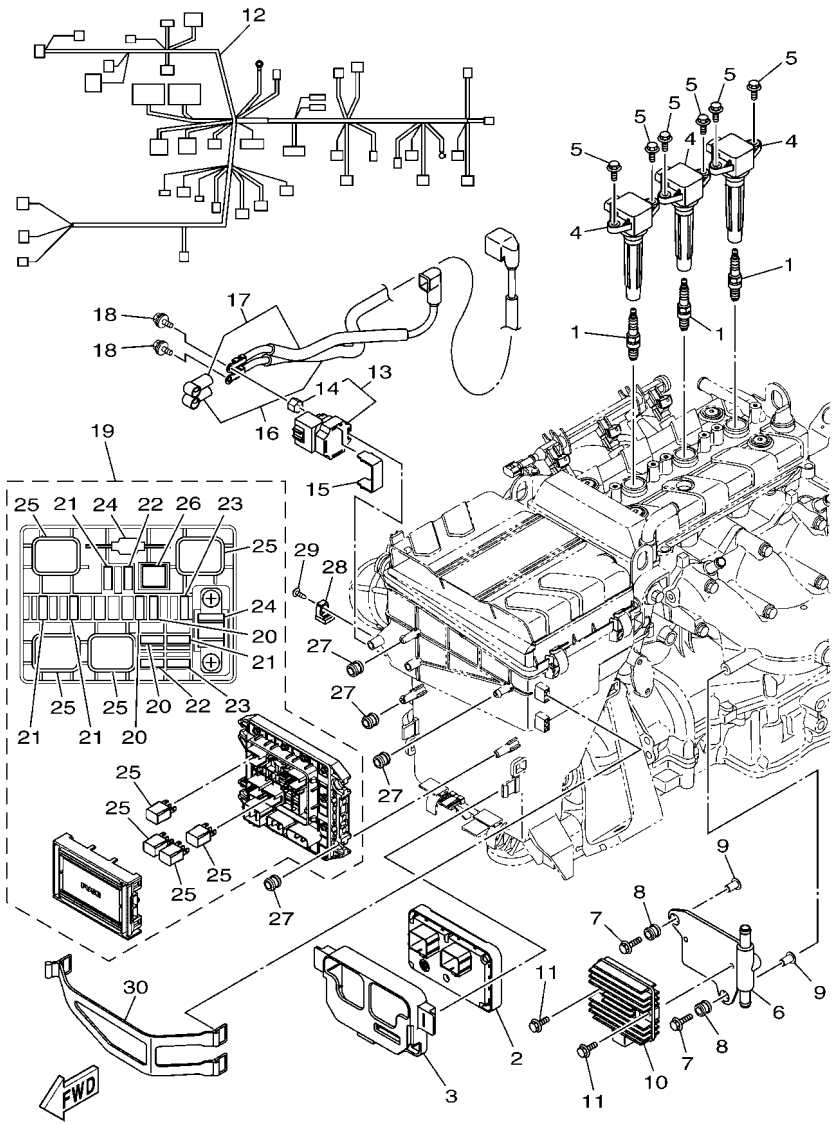

F4N7100-X160

FIG. 16 ELECTRICAL 1

REF. NO.	PART NO.	DESCRIPTION	F9L2					REMARKS
28	6AA–85542–00	BRACKET	1					
29	90160–05003	SCREW, ROUND TAPPING	1					
30	6EY–82593–01	BAND	1					

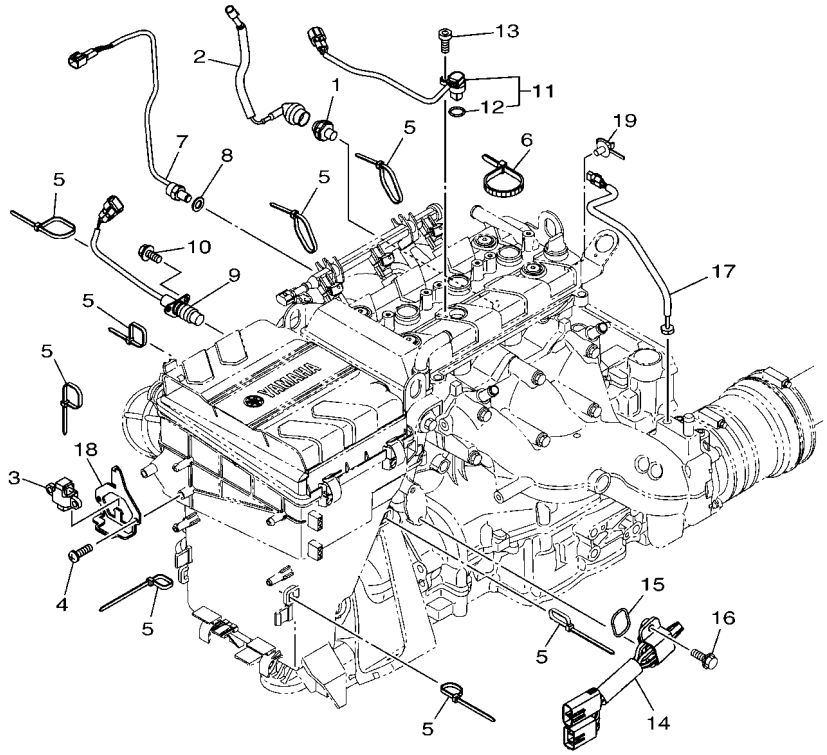

F4N1100-W170

FIG. 17 ELECTRICAL 2

REF. NO.	PART NO.	DESCRIPTION	F9L2					REMARKS
1	68V–82504–00	OIL PRESSURE SWITCH ASSY	1					
2	60E–81315–01	LEAD WIRE ASSY	1					
3	6ET–82576–00	SENSOR, LEAN ANGLE	1					
4	97780–60520	SCREW, TAPPING	2					
5	90464–35132	CLAMP	8					
6	90465–13M39	CLAMP	1					
7	61A–85790–01	THERMOSENSOR ASSY	1					
8	92990–10600	WASHER, PLATE	1					
9	6CR–82560–00	THERMO SWITCH ASSY	1					
10	97E95–06520	BOLT, HEXAGON W/W DEEP RECESS	2					
11	2S3–85896–02	SENSOR, CAM POSITION	1					
12	4D9–81168–00	.O-RING	1					
13	91380–06016	BOLT	1					
14	6CS–8273J–11	EARTH PLATE COMP.	1					
15	93210–32172	O-RING	1					
16	90119–06MA3	BOLT, WITH WASHER	2					
17	6DE–85790–00	THERMOSENSOR ASSY	1					
18	6EY–83618–10	PLATE	1					
19	90464–20005	CLAMP	1					

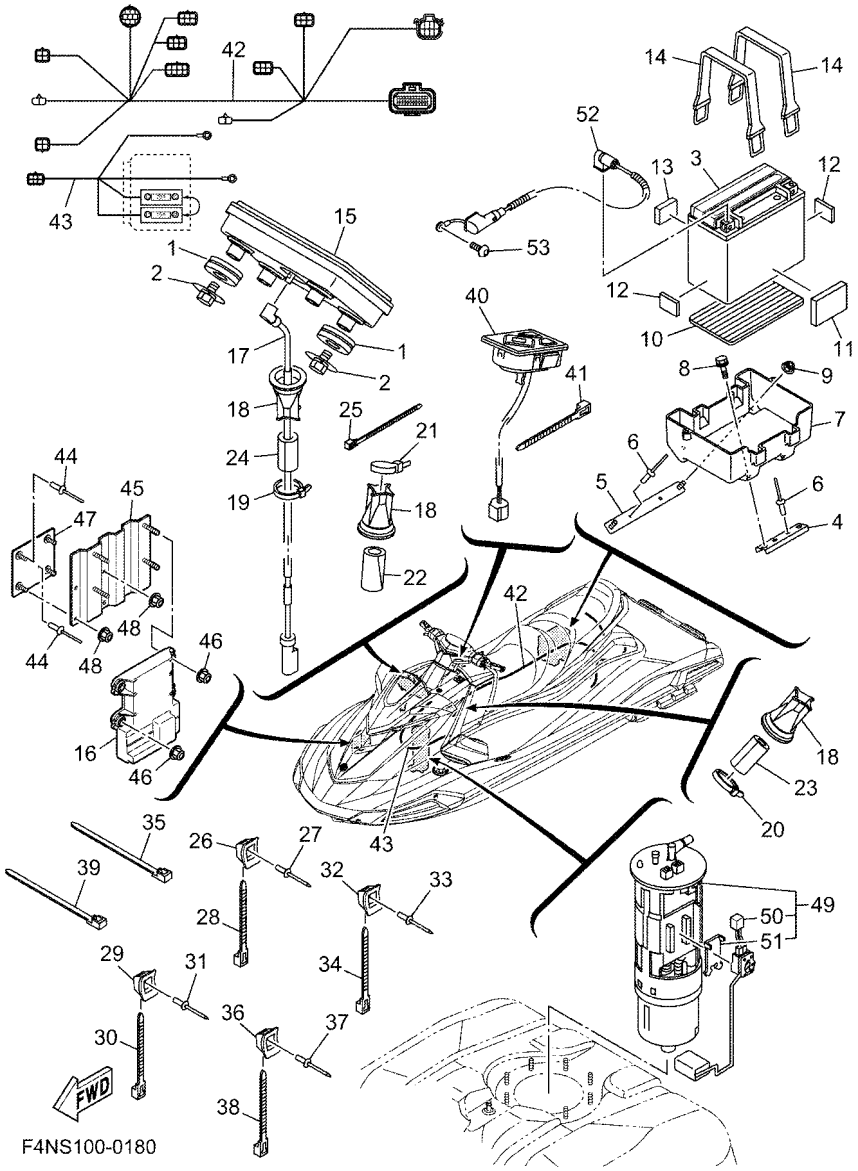

FIG. 18 ELECTRICAL 3

REF. NO.	PART NO.	DESCRIPTION	F9L2					REMARKS
1	90480–19800	GROMMET	4					
2	90119–05803	BOLT, WITH WASHER	4					
3	5FU–H2100–21	BATTERY ASSY (YUASA YTX20L-BS)	1					
4	F2S–U8592–00	PLATE, BASE 2	1					
5	F2S–U8593–00	PLATE, BASE 3	1					
6	90267–489U1	RIVET,BLIND	4					
7	F2S–U8211–00	CASE, BATTERY	1					
8	90119–06832	BOLT, WITH WASHER	2					
9	F2N–U142L–00	NUT, LOCK	2					
10	F1S–U8221–00	PAD, BATTERY	1					
11	F1W–U759C–01	MAT 2	1					
12	EU0–U8221–31	PAD, BATTERY	2					
13	F2C–U1743–00	PACKING	1					
14	F4P–U821D–00	BAND, BATTERY 1	2					
15	F7M–U820J–00	DISPLAY METER ASSY.	1					
16	F7M–U820H–10	METER CONTROL UNIT ASSY.	1					FOR CAN
	F7M–U820H–20	METER CONTROL UNIT ASSY.	1					FOR EUR
17	F7M–U823K–00	CABLE,METER	1					
18	F3J–U822E–01	GROMMET	3					
19	90464–32801	CLAMP	1					
20	90464–32801	CLAMP	1					
21	90464–32801	CLAMP	1					
22	GJ1–U7578–22	PACKING, HOSE 2	1					
23	GJ1–U7578–22	PACKING, HOSE 2	1					
24	GJ1–U7578–22	PACKING, HOSE 2	1					
25	90464–31827	CLAMP	1					122X4.80
26	F1W–U828M–00	BASE, CLAMP	7					

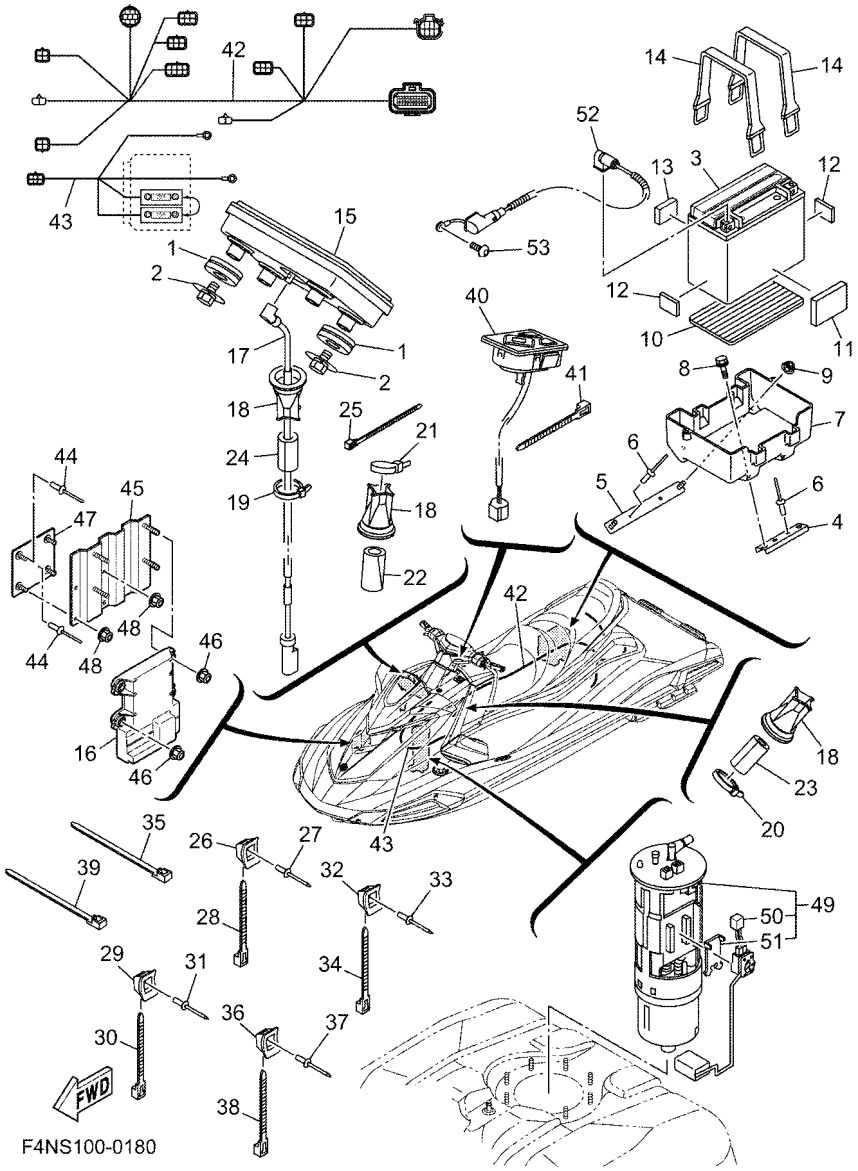

FIG. 18 ELECTRICAL 3

REF. NO.	PART NO.	DESCRIPTION	F9L2					REMARKS
27	90267–48806	RIVET, BLIND	7					
28	90464–32801	CLAMP	5					
29	F1W–U828M–00	BASE, CLAMP	2					
30	90464–32801	CLAMP	2					
31	90267–48806	RIVET, BLIND	2					
32	F1W–U828M–00	BASE, CLAMP	3					
33	90267–48806	RIVET, BLIND	3					
34	90464–32801	CLAMP	1					
35	F2C–U4256–00	CLAMP	1					
36	F1W–U828M–00	BASE, CLAMP	1					
37	90267–48806	RIVET, BLIND	1					
38	F2C–U4256–00	CLAMP	2					
39	90601–200U2	BAND	3					
40	F5G–U8090–01	SWITCH ASSY.	1					
41	90464–32801	CLAMP	1					
42	F7M–60891–00	WIRE HARNESS,1	1					
43	F7M–68275–00	WIRE, HARNESS	1					
44	90267–48806	RIVET, BLIND	2					
45	F7M–UFG21–00	BRACKET 1	1					
46	F2N–U142L–00	NUT, LOCK	4					
47	F7M–UFG22–00	BRACKET 2	1					
48	F2N–U142L–00	NUT, LOCK	4					
49	6S5–13907–05	FUEL PUMP COMP.	1					
50	6S5–682E0–10	.FUEL SENDER ASSY	1					
51	60E–82556–10	.DAMPER, STOPPER	1					
52	6JS–82116–00	WIRE, MINUS LEAD	1					
53	97513–08514	BOLT, WITH WASHER	1					

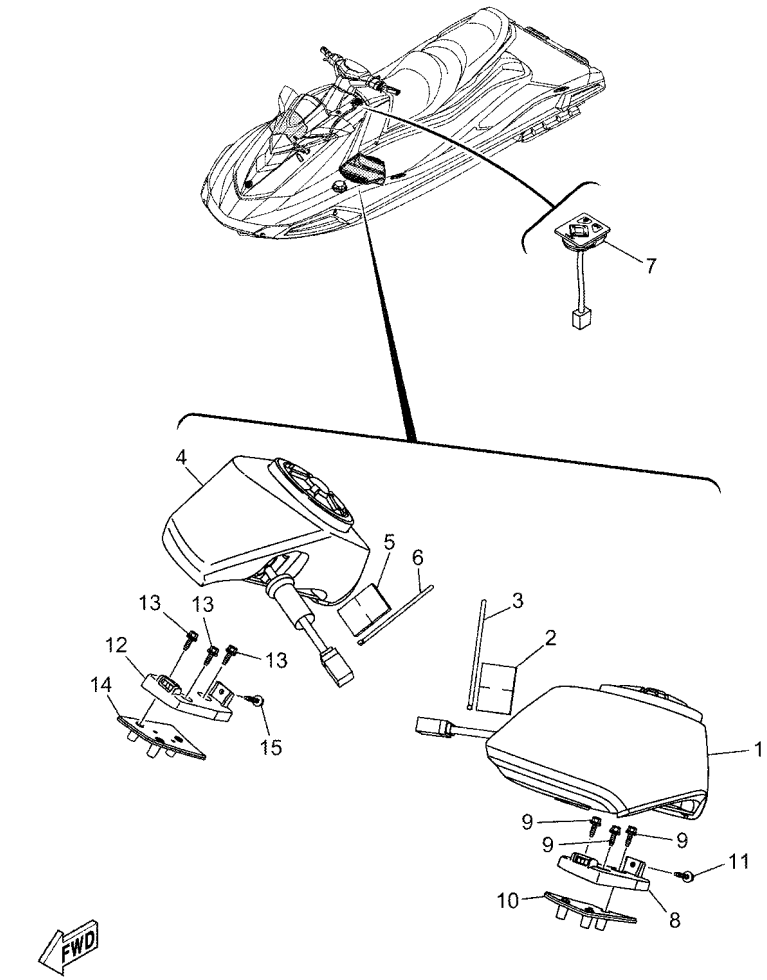

F7M4100-0230

FIG. 19 ELECTRICAL 4

REF. NO.	PART NO.	DESCRIPTION	F9L2					REMARKS
1	F7M–U8102–00	SPEAKER ASSY 1	1					
2	GJ1–U7578–12	PACKING, HOSE 2	1					
3	90464–32801	CLAMP	1					
4	F7M–U8103–00	SPEAKER ASSY 2	1					
5	GJ1–U7578–12	PACKING, HOSE 2	1					
6	90464–32801	CLAMP	1					
7	F7M–U81AJ–00	CONTROLLER, AUDIO	1					
8	F7M–UE6GA–00	BRACKET, SPEAKER 1	1					
9	90119–06878	BOLT, WITH WASHER	3					
10	F7M–U0392–00	BRACKET	1					
11	90119–06880	BOLT, WITH WASHER	1					
12	F7M–UE6GA–10	BRACKET, SPEAKER 1	1					
13	90119–06878	BOLT, WITH WASHER	3					
14	F7M–U0392–10	BRACKET	1					
15	90119–06880	BOLT, WITH WASHER	1					

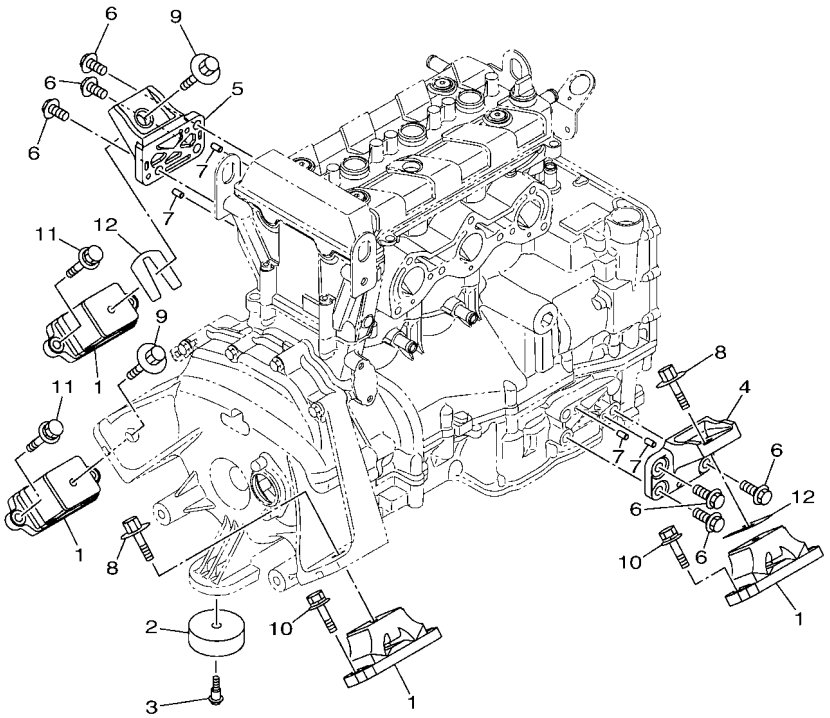

F4N1100-W200

FIG. 20 ENGINE MOUNT

REF. NO.	PART NO.	DESCRIPTION	F9L2					REMARKS
1	6GA–44517–00	MOUNT RUBBER	4					
2	6EY–44574–00	STOPPER, LOWER MOUNT RUBBER	1					
3	90109–06M92	BOLT	1					
4	6EY–41661–10	BRACKET 1	1					
5	6EY–41662–00	BRACKET 2	1					
6	90105–10M49	BOLT, FLANGE	6					
7	93606–12019	PIN, DOWEL	4					
8	90119–08859	BOLT, WITH WASHER	2					
9	90119–08859	BOLT, WITH WASHER	2					
10	90119–08823	BOLT, WITH WASHER	4					
11	90119–08823	BOLT, WITH WASHER	4					
12	EU0–U7354–00–01	SHIM (T=0.1)	4					UN
	EU0–U7354–00–03	SHIM (T=0.3)	4					UN
	EU0–U7354–00–05	SHIM (T=0.5)	4					UN
	EU0–U7354–00–10	SHIM (T=1.0)	4					UN
	EU0–U7354–00–20	SHIM (T=2.0)	4					UN

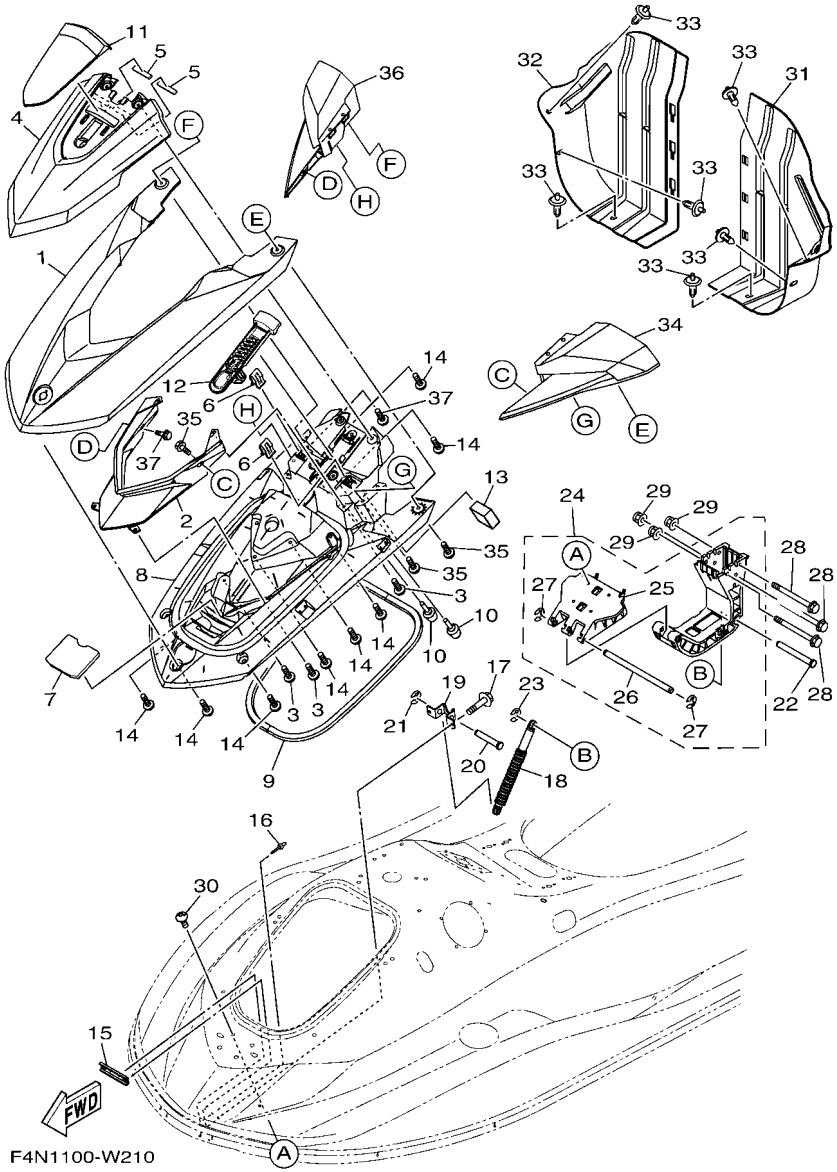

FIG. 21 ENGINE HATCH 1

REF. NO.	PART NO.	DESCRIPTION	F9L2					REMARKS
1	F4N–U517B–00–PB	LID, ENGINE ROOM (PCS1)	1					FOR BLUE
	F4N–U517B–00–CL	LID, ENGINE ROOM (LGNMB)	1					FOR RED
2	F4N–U517V–00	ORNAMENT, CENTER	1					
3	F2S–U13C1–00	SCREW	4					
4	F4N–U515N–02–PD	VISOR (DBSC)	1					FOR BLUE
	F4N–U515N–02–CL	VISOR (LGNMB)	1					FOR RED
5	F1K–U266B–00	PACKING 3	2					
6	F3Y–U153K–00	CLIP	2					
7	F4P–U7462–01	STOPPER, PACKING	1					
8	F4N–U519G–01	INNER, ENGINE HATCH	1					
9	F4P–U2663–01	PACKING 1	1					
10	F1W–U3768–01	CUSHION, RUBBER	4					
11	F4N–U515P–40	VISOR 2	1					FOR BLUE
	F4N–U515P–00	VISOR 2	1					FOR RED
12	F4N–U517C–00	LOCK, LID	1					
13	F2C–U1743–00	PACKING	1					
14	F2S–U13C1–00	SCREW	12					
15	F2S–U8592–00	PLATE, BASE 2	1					
16	90267–489U1	RIVET,BLIND	2					
17	90119–06832	BOLT, WITH WASHER	2					
18	F4P–U515D–01	DAMPER 1	1					
19	F4P–UFRV1–00	BRACKET, DAMPER 1	1					
20	F4P–U7243–00	CLEVIS	1					
21	F4P–U515C–00	E-RING	1					
22	F4P–UF8DM–00	CLEVIS 1	1					
23	F4P–U515C–00	E-RING	1					
24	F4P–U515A–00	HINGE ASSY.	1					

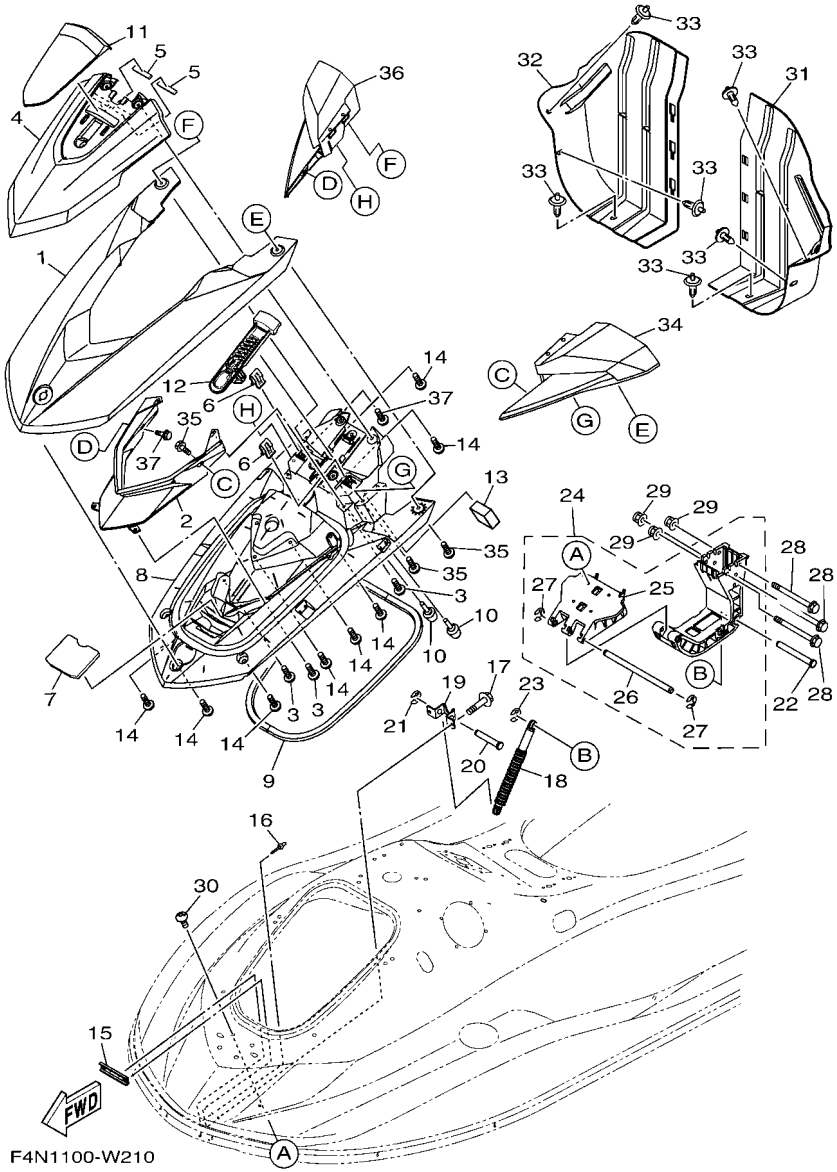

FIG. 21 ENGINE HATCH 1

REF. NO.	PART NO.	DESCRIPTION	F9L2					REMARKS
25	F4P–U518E–00	.PLATE, HINGE LID	1					
26	F4P–U7256–00	.ROD	1					
27	F4P–U515C–00	.E-RING	2					
28	F4P–U4445–00	BOLT, STUD 1	3					
29	F3Y–U142L–00	NUT, LOCK	3					
30	90111–06873	BOLT, HEXAGON SOCKET BUTTON	4					
31	F4P–U475B–00	LOCKER,BOW	1					
32	F4P–U475F–00	PLATE, LOKER BOW	1					
33	F4P–U1454–00	RIVET	6					
34	F4N–U590D–C0	MIRROR ASSY 1	1					
35	90119–06880	BOLT, WITH WASHER	4					
36	F4N–U590E–C0	MIRROR ASSY 2	1					
37	90119–06880	BOLT, WITH WASHER	4					

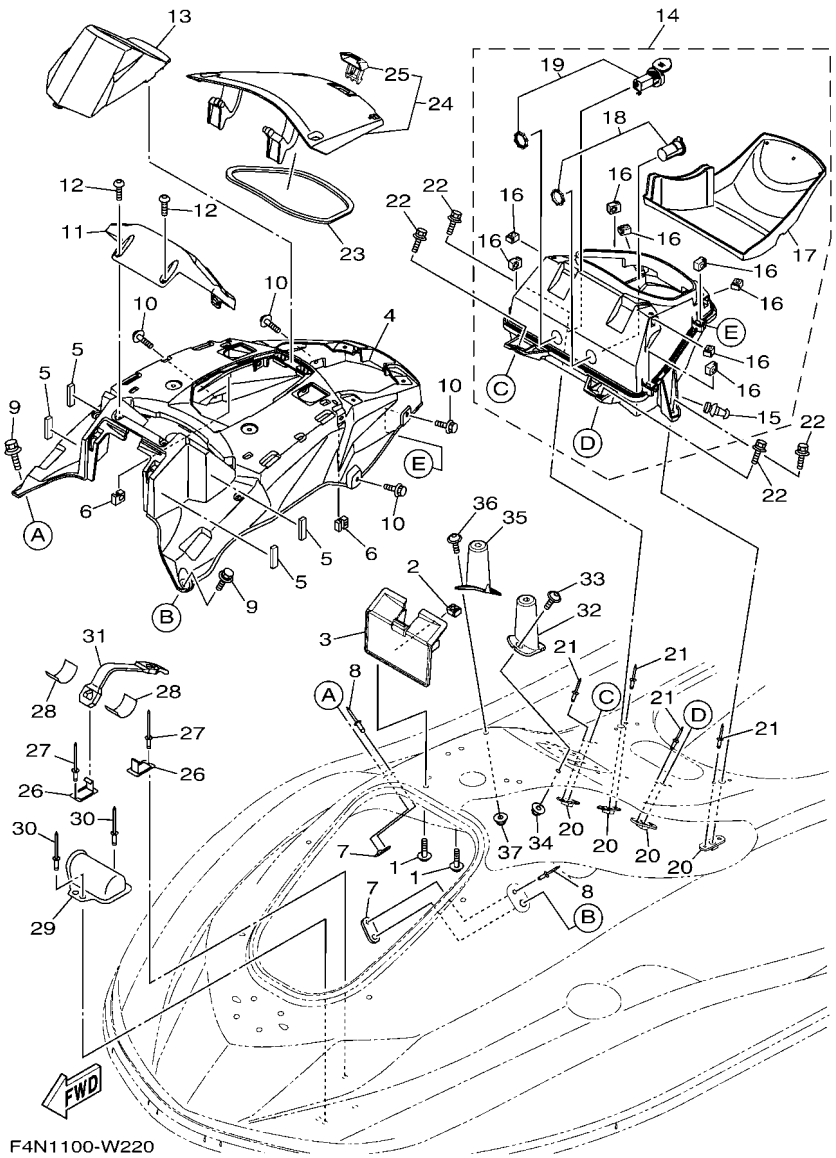

FIG. 22 ENGINE HATCH 2

REF. NO.	PART NO.	DESCRIPTION	F9L2					REMARKS
1	90119–06880	BOLT, WITH WASHER	2					
2	F3X–U517E–00	NUT	2					
3	F4P–U517F–00	HOOK,LID LOCK	1					
4	F4N–U5554–00	COVER, CENTER	1					
5	F1K–U266B–00	PACKING 3	4					
6	F3X–U517E–00	NUT	2					
7	F2X–U5175–00	PLATE, FIX	2					
8	90267–489U1	RIVET,BLIND	2					
9	90119–06882	BOLT, WITH WASHER	2					
10	F4P–U1355–00	BOLT	4					
11	F4N–U8262–00	COVER METER	1					
12	F2S–U13C1–00	SCREW	2					
13	F4N–U513M–00	COVER, FRONT	1					
14	F7M–U1708–10	GLOVE BOX HATCH ASSY	1					
15	F3X–U2723–00	.SEAL	1					
16	F3X–U517E–00	.NUT	8					
17	F4N–U591L–00	.INNER, CASE	1					
18	F7M–H254B–01	.TERMINAL COMP.	1					
19	F7M–H21E1–10	.PLUG, USB	1					
20	F2C–U826C–00	BRACKET	4					
21	F4P–U516R–01	RIVET 1	8					
22	90119–08822	BOLT, WITH WASHER	4					
23	F4N–U519D–02	PACKING CASE	1					
24	F4N–U4705–01	GLOVE BOX COVER ASSY	1					
25	F4N–U2875–00	.LOCK	1					
26	F1K–U5772–04	HOOK A	2					
27	90267–489U1	RIVET,BLIND	2					

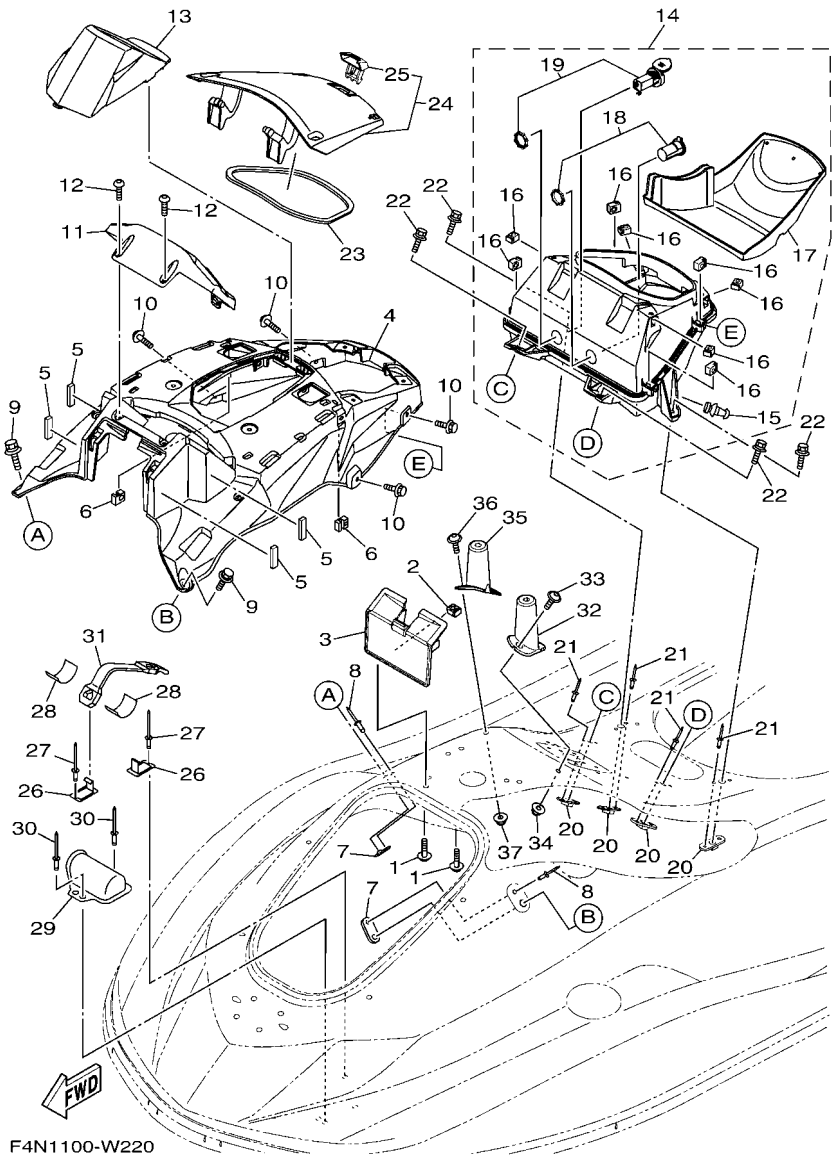

FIG. 22 ENGINE HATCH 2

REF. NO.	PART NO.	DESCRIPTION	F9L2					REMARKS
28	F1K–U759C–00	MAT 2	2					
29	F2X–U5983–00	BOX, FIRE EXTINGUISHER	1					
30	90267–48802	RIVET, BLIND	2					
31	F2P–U828K–00	BAND 1	1					
32	F4N–U974A–00	RFM.,DASH BOARD 1	1					
33	F3X–U7823–12	SCREW	2					
34	F2N–U142L–00	NUT, LOCK	2					
35	F4N–U974B–00	RFM.,DASH BOARD 2	1					
36	F3X–U7823–12	SCREW	2					
37	F2N–U142L–00	NUT, LOCK	2					

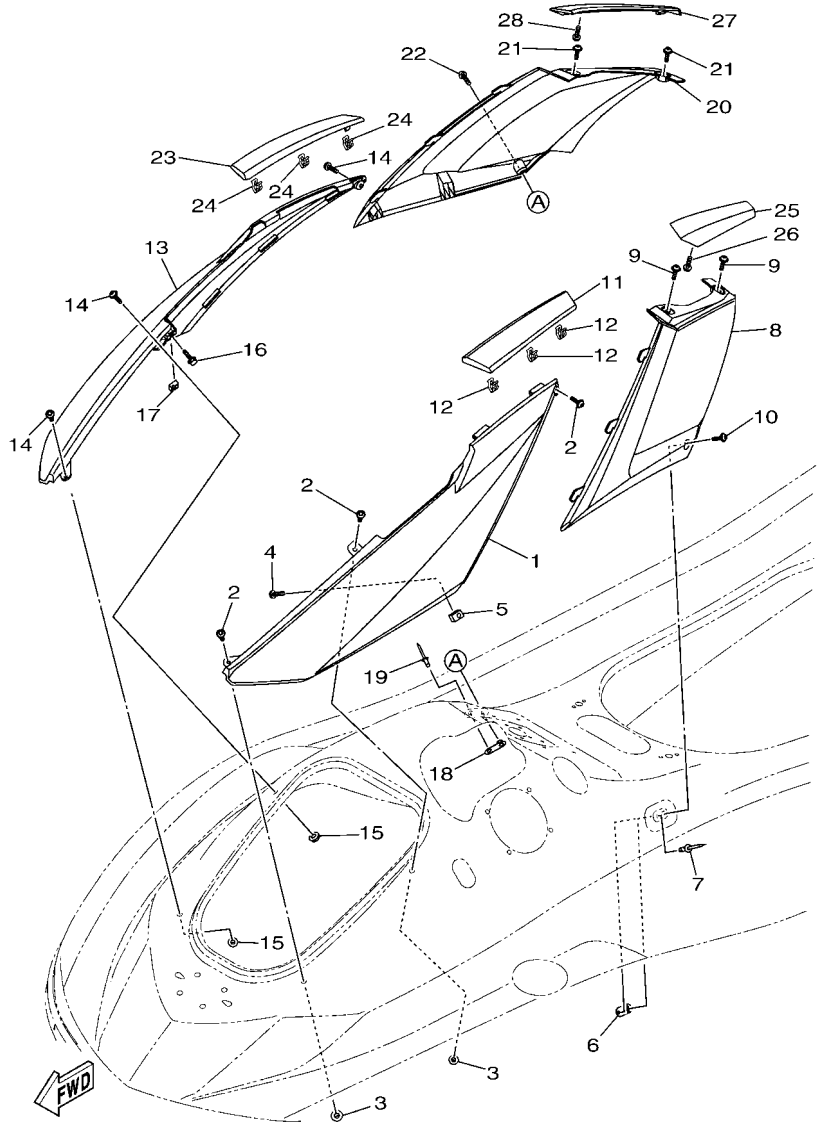

F4N1100-W230

FIG. 23 ENGINE HATCH 3

REF. NO.	PART NO.	DESCRIPTION	F9L2					REMARKS
1	F4N–U377B–00–PE	COVER,SIDE 1 (DBSC)	1					FOR BLUE
	F4N–U377B–00–P9	COVER,SIDE 1 (RM9)	1					FOR RED
2	F3X–U7823–12	SCREW	3					
3	F2N–U142L–00	NUT, LOCK	2					
4	90119–06880	BOLT, WITH WASHER	1					
5	F3X–U517E–00	NUT	1					
6	F2X–U5175–00	PLATE, FIX	1					
7	90267–489U1	RIVET,BLIND	1					
8	F4N–U353B–00–PB	PAD, KNEE (DBSC)	1					FOR BLUE
	F4N–U353B–00–98	PAD, KNEE (LGB)	1					FOR RED
9	F3X–U7823–12	SCREW	2					
10	F3X–U7823–02	SCREW	1					
11	F4N–U517W–01–PD	ORNAMENT LH (DBSC)	1					FOR BLUE
	F4N–U517W–01–98	ORNAMENT LH (LGB)	1					FOR RED
12	F3Y–U153K–00	CLIP	3					
13	F4N–U377C–00–PE	COVER,SIDE 2 (DBSC)	1					FOR BLUE
	F4N–U377C–00–P9	COVER,SIDE 2 (RM9)	1					FOR RED
14	F3X–U7823–12	SCREW	3					
15	F2N–U142L–00	NUT, LOCK	2					
16	90119–06880	BOLT, WITH WASHER	1					
17	F3X–U517E–00	NUT	1					
18	F2X–U5175–00	PLATE, FIX	1					
19	90267–489U1	RIVET,BLIND	1					
20	F4N–U353C–00–PB	PAD, KNEE 1 (DBSC)	1					FOR BLUE
	F4N–U353C–00–98	PAD, KNEE 1 (LGB)	1					FOR RED
21	F3X–U7823–12	SCREW	2					
22	F3X–U7823–02	SCREW	1					

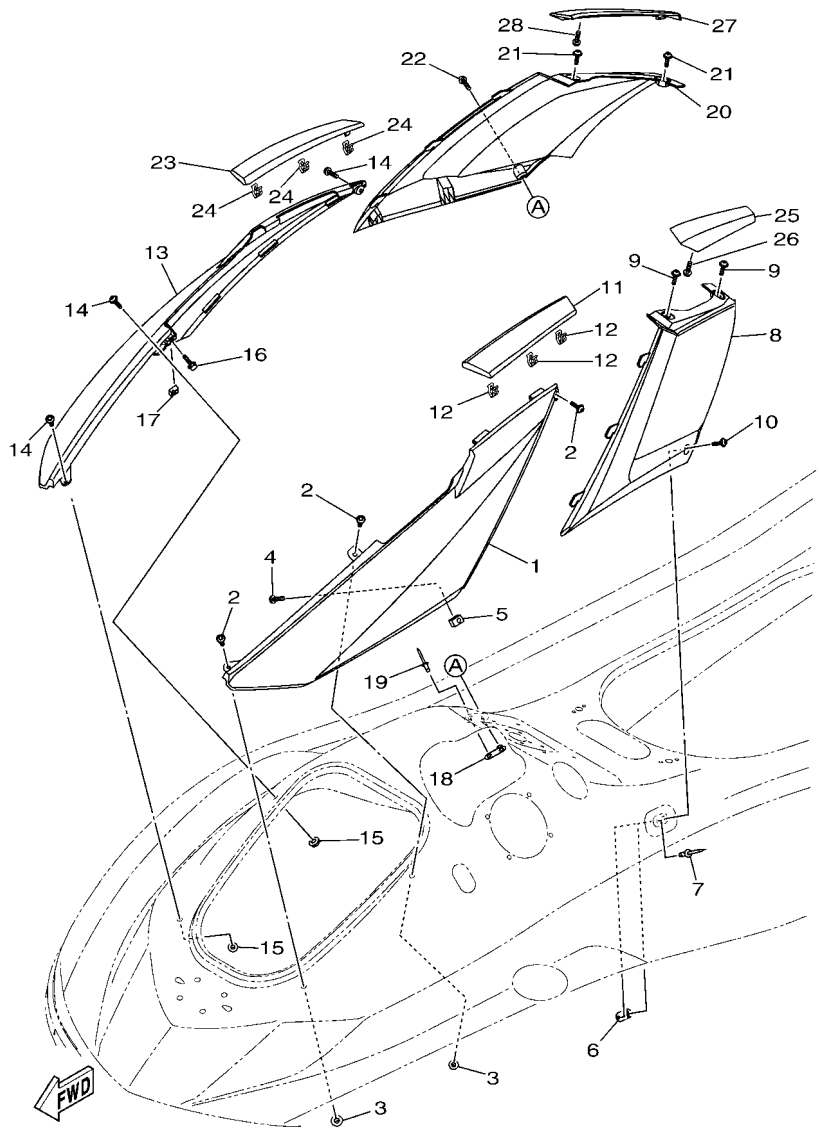

F4N1100-W230

FIG. 23 ENGINE HATCH 3

REF. NO.	PART NO.	DESCRIPTION	F9L2					REMARKS
23	F4N–U517X–01–PD	ORNAMENT RH (DBSC)	1					FOR BLUE
	F4N–U517X–01–98	ORNAMENT RH (LGB)	1					FOR RED
24	F3Y–U153K–00	CLIP	3					
25	F4N–U89AA–00–PB	ORNAMENT, MIDDLE LH (DBSC)	1					FOR BLUE
	F4N–U89AA–00–98	ORNAMENT, MIDDLE LH (LGB)	1					FOR RED
26	F2S–U13C1–00	SCREW	1					
27	F4N–U89AB–00–PB	ORNAMENT, MIDDLE RH (DBSC)	1					FOR BLUE
	F4N–U89AB–00–98	ORNAMENT, MIDDLE RH (LGB)	1					FOR RED
28	F2S–U13C1–00	SCREW	1					

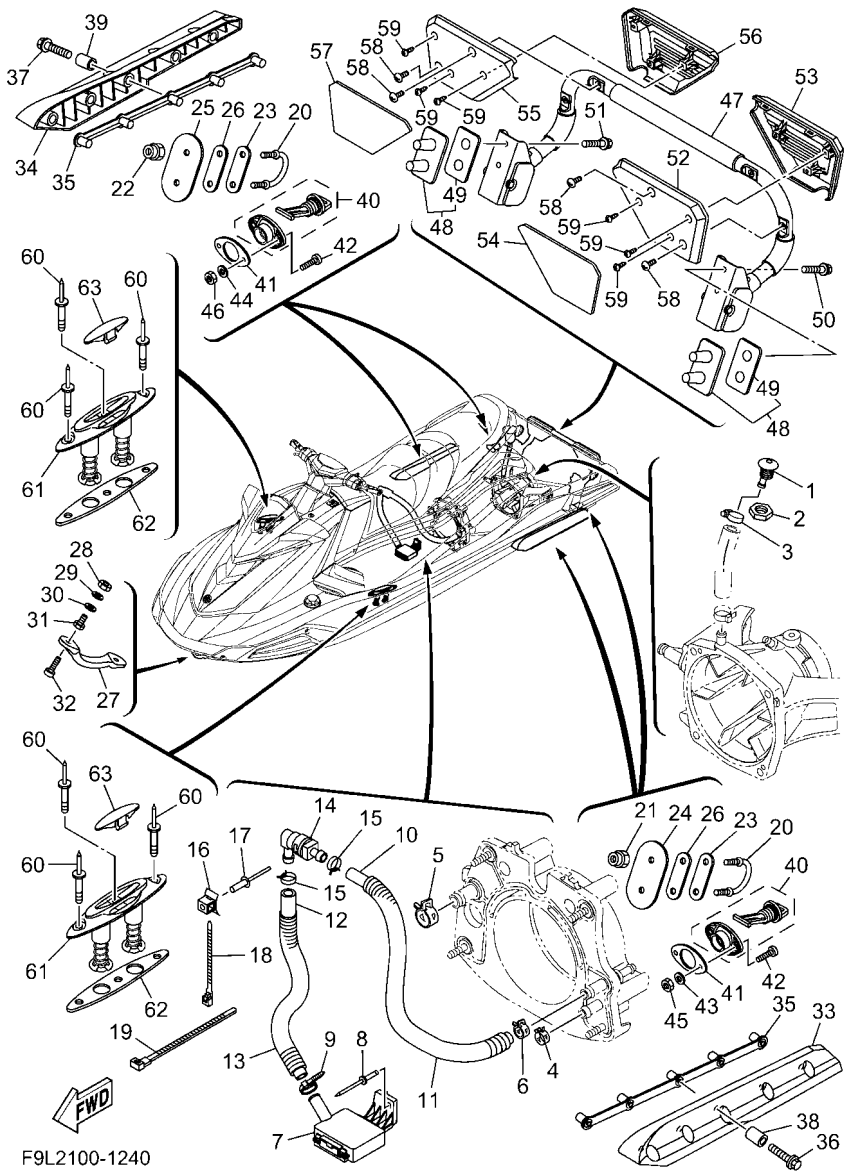

FIG. 24 HULL & DECK

REF. NO.	PART NO.	DESCRIPTION	F9L2					REMARKS
1	F1W–U269B–00	SPOUT	1					
2	EU0–61652–00	NUT	1					
3	90601–118UF	BAND, HOSE 18	1					
4	90467–200A3	CLIP	1					
5	90467–240A3	CLIP	1					
6	90467–180A5	CLIP	1					
7	F1B–U761D–02	STRAINER, BILGE	1					
8	90267–489U8	RIVET, BLIND	1					
9	90465–11829	CLAMP	1					
10	6EY–U771G–00	HOSE 2	1					
11	6EY–U773E–00	TUBE,2	1					
12	90445–20804	HOSE (L860)	1					
13	6EX–U773E–00	TUBE,2	1					
14	68N–5112T–00	JOINT, HOSE	1					
15	90467–180A5	CLIP	2					
16	F1W–U828M–00	BASE, CLAMP	1					
17	90267–48802	RIVET, BLIND	1					
18	F2C–U4256–00	CLAMP	1					
19	90464–32801	CLAMP	1					
20	F2N–U1628–10	STERN EYE	2					
21	9572R–08300	NUT, FLANGE	2					
22	9572R–08300	NUT, FLANGE	2					
23	GP7–U4953–10	PLATE A	2					
24	F7M–U4953–20	PLATE A	1					
25	F7M–U4953–20	PLATE A	1					
26	F1B–U1653–03	PACKING	2					
27	F1K–61624–00	BOW EYE 1	1					

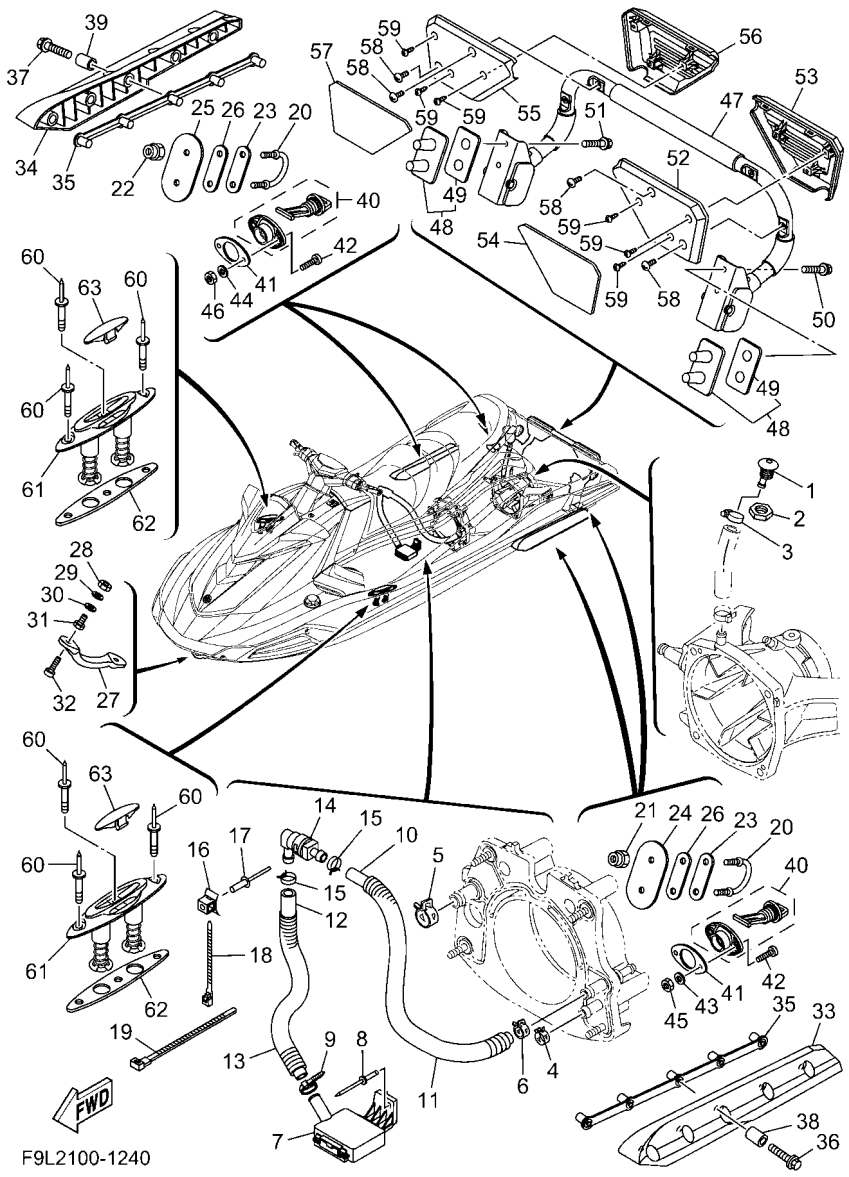

FIG. 24 HULL & DECK

REF. NO.	PART NO.	DESCRIPTION	F9L2					REMARKS
28	99780–12600	NUT.HEX.(COARS)	2					
29	92990–12200	WASHER, PLAIN	2					
30	F0X–61637–00	WASHER	2					
31	F0X–61652–01	NUT	2					
32	90110–06040	BOLT, HEXAGON SOCKET HEAD	2					
33	F1S–U883N–01	STABILIZER LH	1					BLACK
34	F1S–U883P–01	STABILIZER RH	1					BLACK
35	F1X–U883T–02	BRACKET,STABILIZER	2					
36	90105–08860	BOLT, FLANGE	5					
37	90105–08860	BOLT, FLANGE	5					
38	F2N–U8169–10	SPACER	5					
39	F2N–U8169–10	SPACER	5					
40	F1S–U2280–02	DRAIN PLUG ASSY.	2					
41	F1S–U2285–01	PACKING, DRAIN	2					
42	9788R–05025	SCREW, PAN HEAD	4					
43	9299R–05200	WASHER	2					
44	9299R–05200	WASHER	2					
45	9572R–05300	NUT, FLANGE	2					
46	9572R–05300	NUT, FLANGE	2					
47	F4N–U278A–00	LADDER, STEP ASSY	1					
48	F2S–U278F–01	BRACKET, LADDER LH	2					
49	F2S–U278H–01	.PACKING, BRKT. 1	1					
50	90119–08861	BOLT, WITH WASHER	2					
51	90119–08861	BOLT, WITH WASHER	2					
52	F4N–U882F–00	STEP	1					
53	F4N–U884R–00	PLATE, STEP 1	1					
54	F4N–U351R–30	MAT, STEP 7	1					FOR BLUE

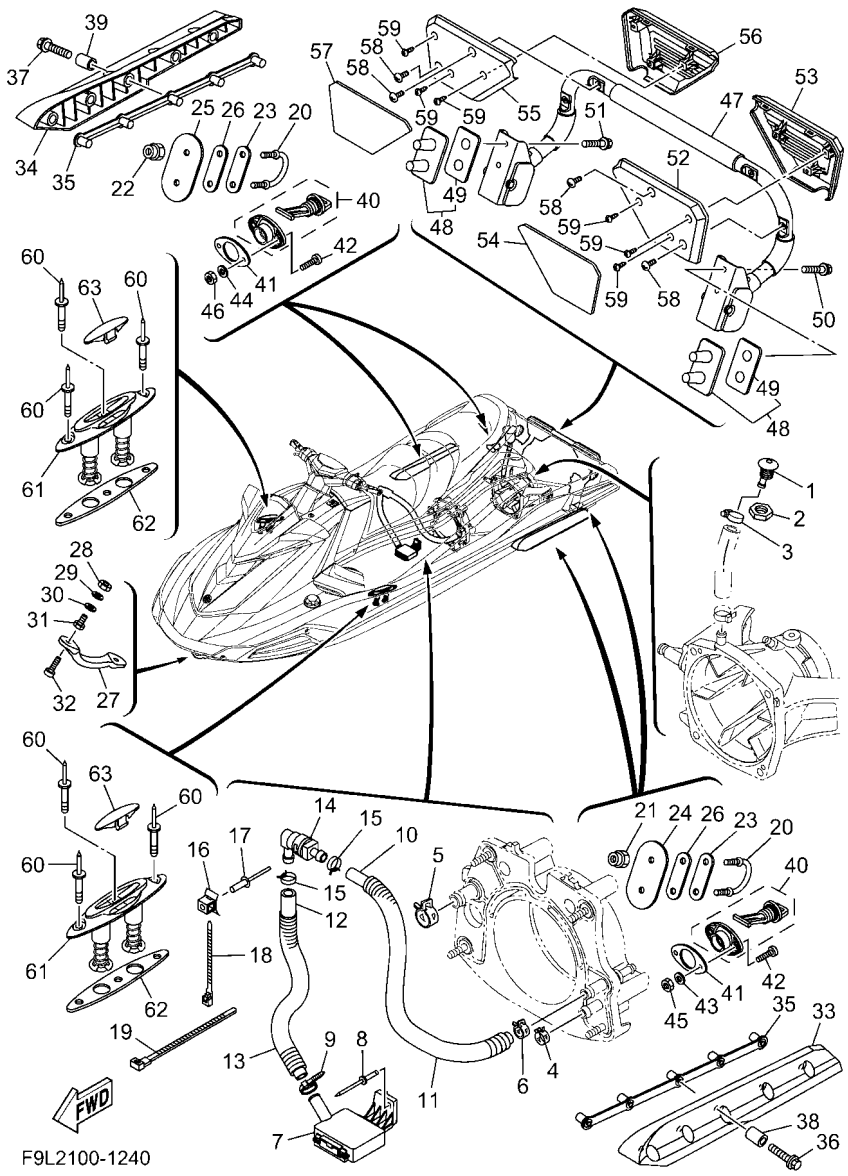

FIG. 24 HULL & DECK

REF. NO.	PART NO.	DESCRIPTION	F9L2					REMARKS
54	F4N–U351R–00	MAT, STEP 7	1					FOR RED
55	F4N–U882F–10	STEP	1					
56	F4N–U884R–10	PLATE, STEP 1	1					
57	F4N–U351S–30	MAT, STEP 8	1					FOR BLUE
	F4N–U351S–00	MAT, STEP 8	1					FOR RED
58	90119–069UH	BOLT, WITH WASHER	4					
59	90109–06832	BOLT	6					
60	90267–489U2	RIVET, BLIND	6					
61	F4G–U163A–02	CLEAT ASSY.	2					
62	F4G–U2284–10	PACKING	2					
63	F1X–U826D–01	COVER	2					

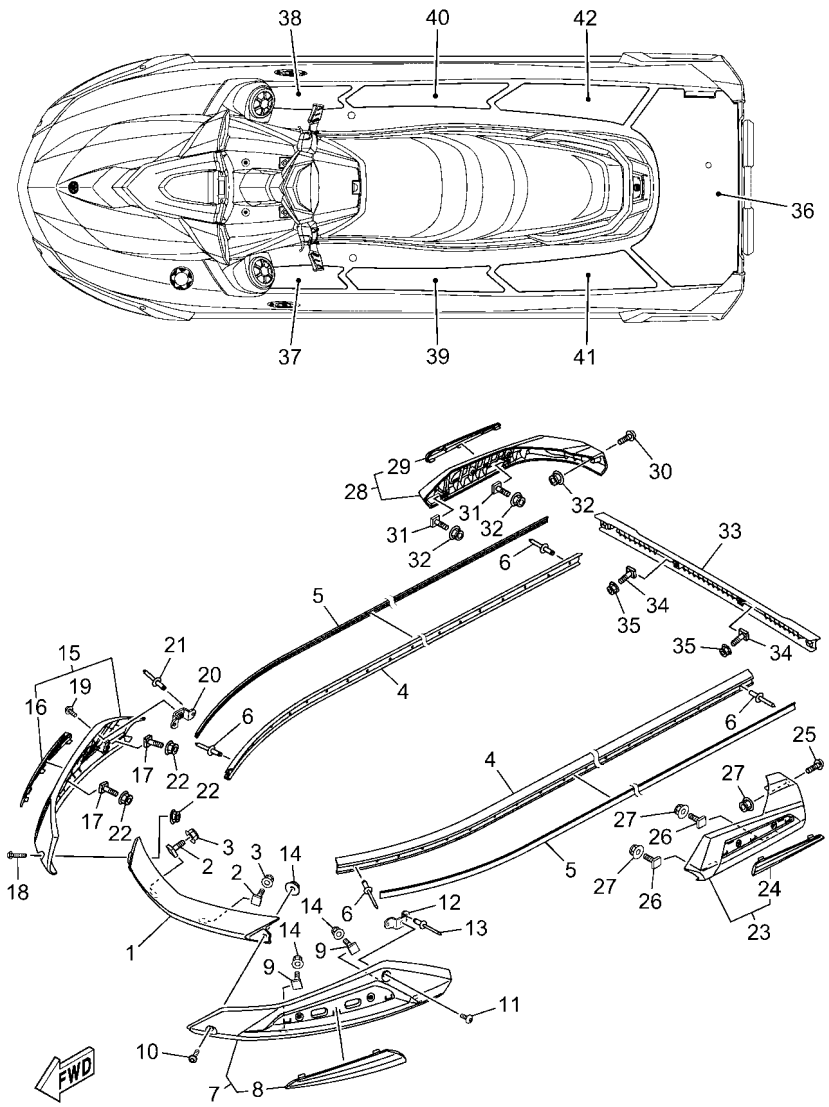

F4NT100-0250

FIG. 25 GUNWALE & MAT

REF. NO.	PART NO.	DESCRIPTION	F9L2					REMARKS
1	F4N–U2511–00	GUNWALE, BOW	1					BLACK
2	F7K–U491K–00	BOLT, SPECIAL	2					
3	F2N–U142L–00	NUT, LOCK	2					
4	F4N–U2512–00	GUNWALE, SIDE	2					BLACK
5	F4N–U2519–10	INNER,GUNWALE	2					BLACK
6	F7K–U1454–00	RIVET	16					
7	F6G–U2510–61	GUNWALE ASSY.	1					BLACK FOR BLUE
	F6G–U2510–J0	GUNWALE ASSY.	1					BLACK FOR RED
8	F4N–U2514–R1	.GUNWALE INSIDE	1					MINT FOR BLUE
	F6G–U2514–00	.GUNWALE INSIDE	1					GRAY FOR RED
9	F7K–U491K–00	BOLT, SPECIAL	2					
10	F3X–U7823–12	SCREW	1					
11	90111–06874	BOLT, HEXAGON SOCKET BUTTON	1					
12	F3X–U4949–00	BRACKET	1					
13	90267–489U6	RIVET, BLIND	2					
14	F2N–U142L–00	NUT, LOCK	3					
15	F6G–U2510–71	GUNWALE ASSY.	1					BLACK FOR BLUE
	F6G–U2510–K0	GUNWALE ASSY.	1					BLACK FOR RED
16	F4N–U2514–S1	.GUNWALE INSIDE	1					MINT FOR BLUE
	F6G–U2514–10	.GUNWALE INSIDE	1					GRAY FOR RED
17	F7K–U491K–00	BOLT, SPECIAL	2					
18	F3X–U7823–12	SCREW	1					
19	90111–06874	BOLT, HEXAGON SOCKET BUTTON	1					
20	F3X–U4949–00	BRACKET	1					
21	90267–489U6	RIVET, BLIND	2					
22	F2N–U142L–00	NUT, LOCK	3					
23	F6G–U2504–61	STERN GUNWALE COMP.	1					BLACK FOR BLUE

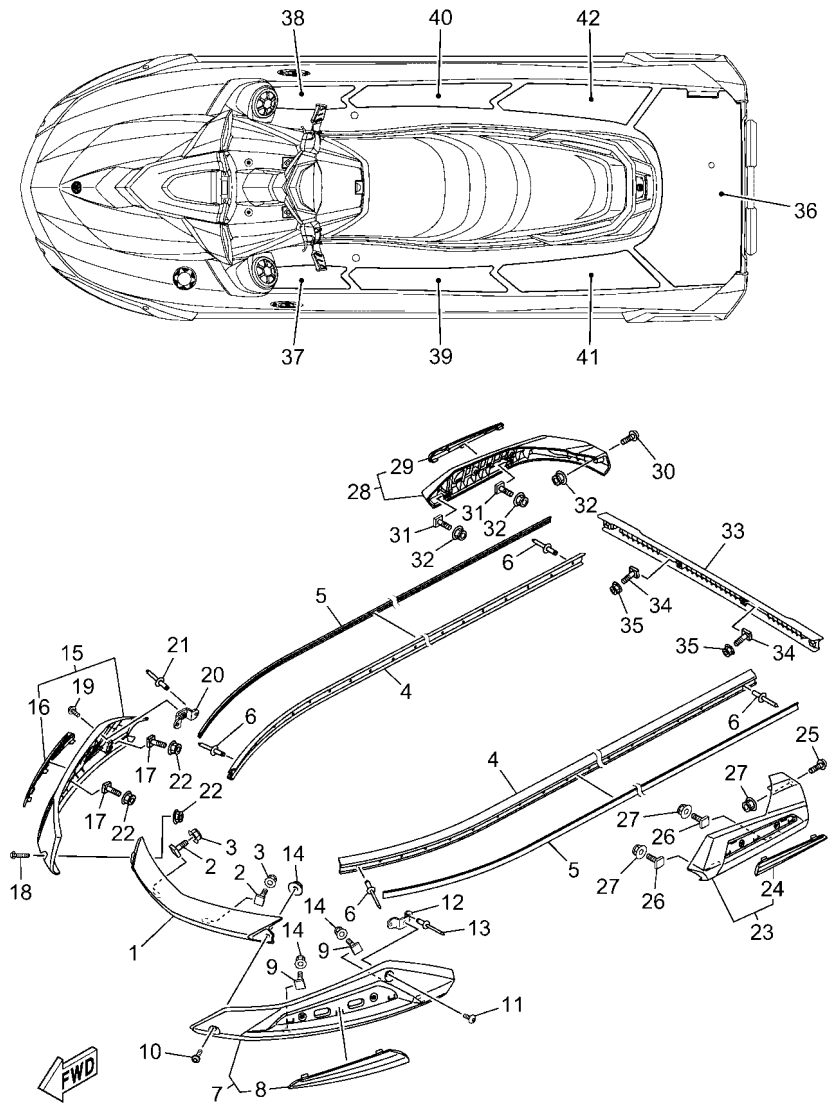

F4NT100-0250

FIG. 25 GUNWALE & MAT

REF. NO.	PART NO.	DESCRIPTION	F9L2					REMARKS
23	F6G–U2504–L0	STERN GUNWALE COMP.	1					BLACK FOR RED
24	F4N–U255C–R1	.INNER GUNWALE, AFT	1					MINT FOR BLUE
	F6G–U255C–00	.INNER GUNWALE, AFT	1					GRAY FOR RED
25	F4P–U7823–00	SCREW	1					
26	F7K–U491K–00	BOLT, SPECIAL	2					
27	F2N–U142L–00	NUT, LOCK	3					
28	F6G–U2504–71	STERN GUNWALE COMP.	1					BLACK FOR BLUE
	F6G–U2504–M0	STERN GUNWALE COMP.	1					BLACK FOR RED
29	F4N–U255C–S1	.INNER GUNWALE, AFT	1					MINT FOR BLUE
	F6G–U255C–10	.INNER GUNWALE, AFT	1					GRAY FOR RED
30	F7K–U491K–00	BOLT, SPECIAL	2					
31	F4P–U7823–00	SCREW	1					
32	F2N–U142L–00	NUT, LOCK	3					
33	F4P–U252C–02	COVER, GUNWALE 1	1					BLACK
34	F7K–U491K–00	BOLT, SPECIAL	2					
35	F2N–U142L–00	NUT, LOCK	2					
36	F4N–U3581–30	MAT, UPPER	1					BLACK/MINT FOR BLUE
	F4N–U3581–00	MAT, UPPER	1					BLACK/GRAY FOR RED
37	F6G–U351H–30	MAT, STEP 1	1					BLACK/MINT FOR BLUE
	F6G–U351H–00	MAT, STEP 1	1					BLACK/GRAY FOR RED
38	F6G–U351J–30	MAT, STEP 2	1					BLACK/MINT FOR BLUE
	F6G–U351J–00	MAT, STEP 2	1					BLACK/GRAY FOR RED
39	F4N–U351K–30	MAT, STEP 3	1					BLACK/MINT FOR BLUE
	F4N–U351K–00	MAT, STEP 3	1					BLACK/GRAY FOR RED
40	F4N–U351M–30	MAT, STEP 4	1					BLACK/MINT FOR BLUE
	F4N–U351M–00	MAT, STEP 4	1					BLACK/GRAY FOR RED
41	F4N–U351N–30	MAT, STEP 5	1					BLACK/MINT FOR BLUE

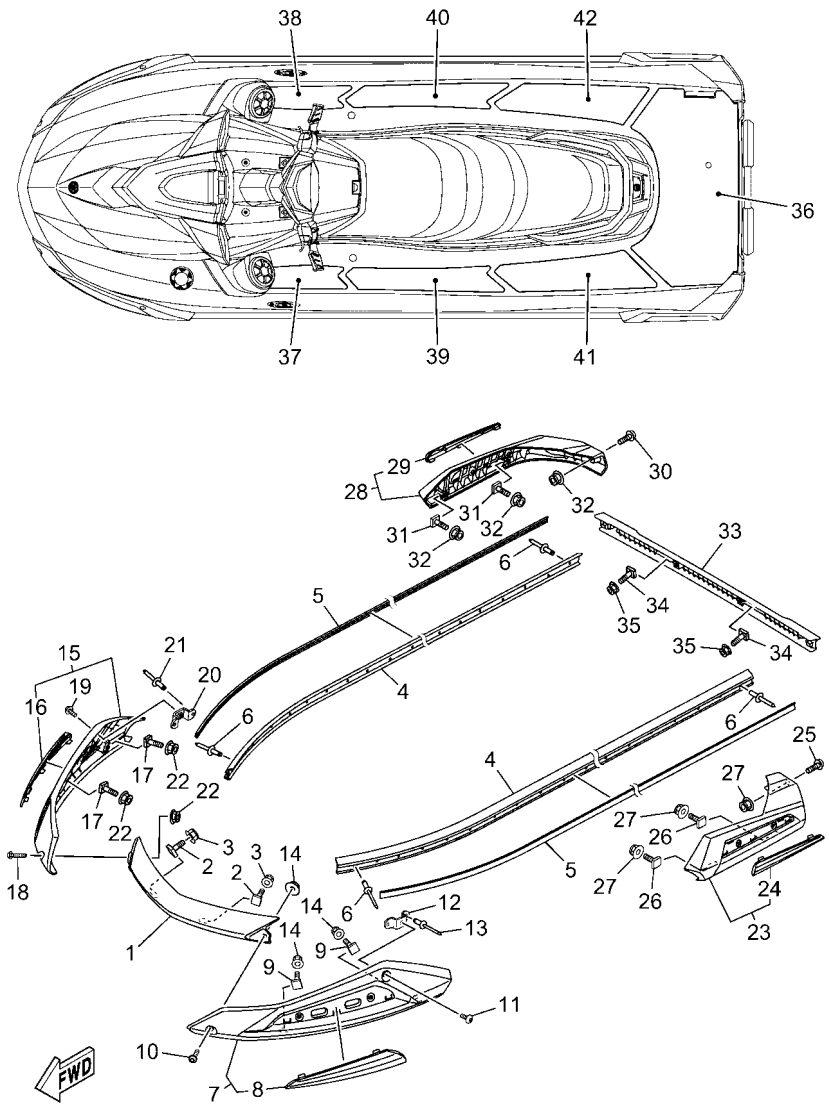

F4NT100-0250

FIG. 25 GUNWALE & MAT

REF. NO.	PART NO.	DESCRIPTION	F9L2					REMARKS
41	F4N–U351N–00	MAT, STEP 5	1					BLACK/GRAY FOR RED
42	F4N–U351P–30	MAT, STEP 6	1					BLACK/MINT FOR BLUE
	F4N–U351P–00	MAT, STEP 6	1					BLACK/GRAY FOR RED

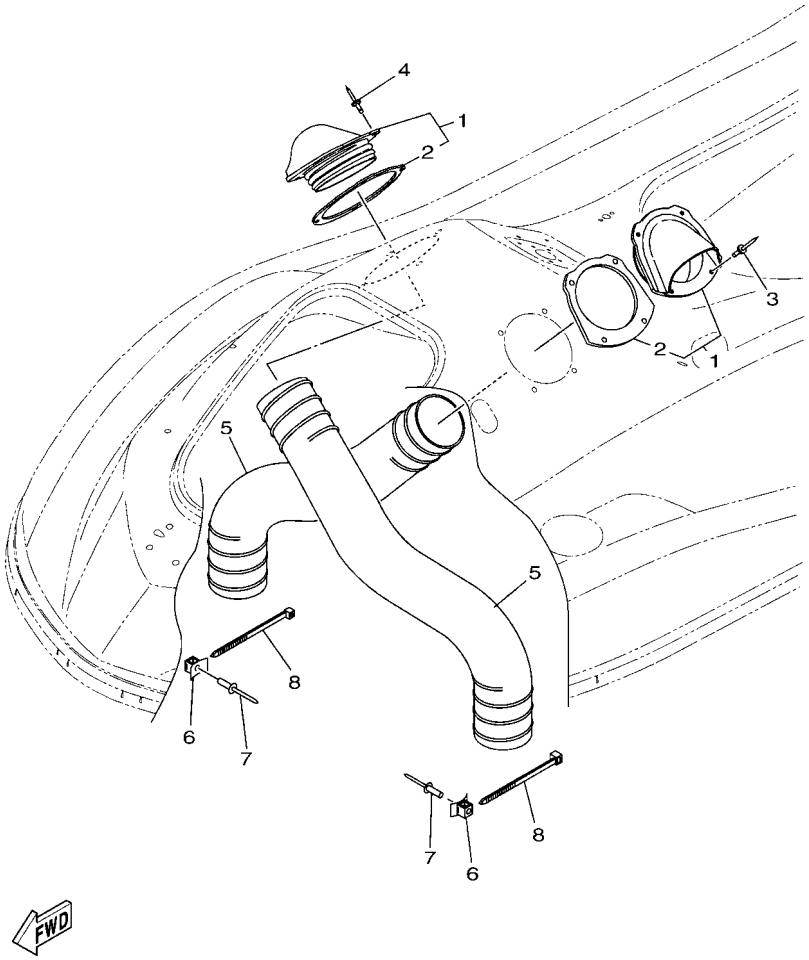

F4N1100-W260

FIG. 26 VENTILATION

REF. NO.	PART NO.	DESCRIPTION	F9L2					REMARKS
1	F2X–U2127–00	BASE, AIR INTAKE	2					
2	F2X–U2157–00	.PACKING	1					
3	90267–48806	RIVET, BLIND	4					
4	90267–48806	RIVET, BLIND	4					
5	F2N–U213G–02	HOSE, VENTILATOR 2	2					
6	F1W–U828M–00	BASE, CLAMP	2					
7	90267–48806	RIVET, BLIND	2					
8	90464–99804	CLAMP	2					

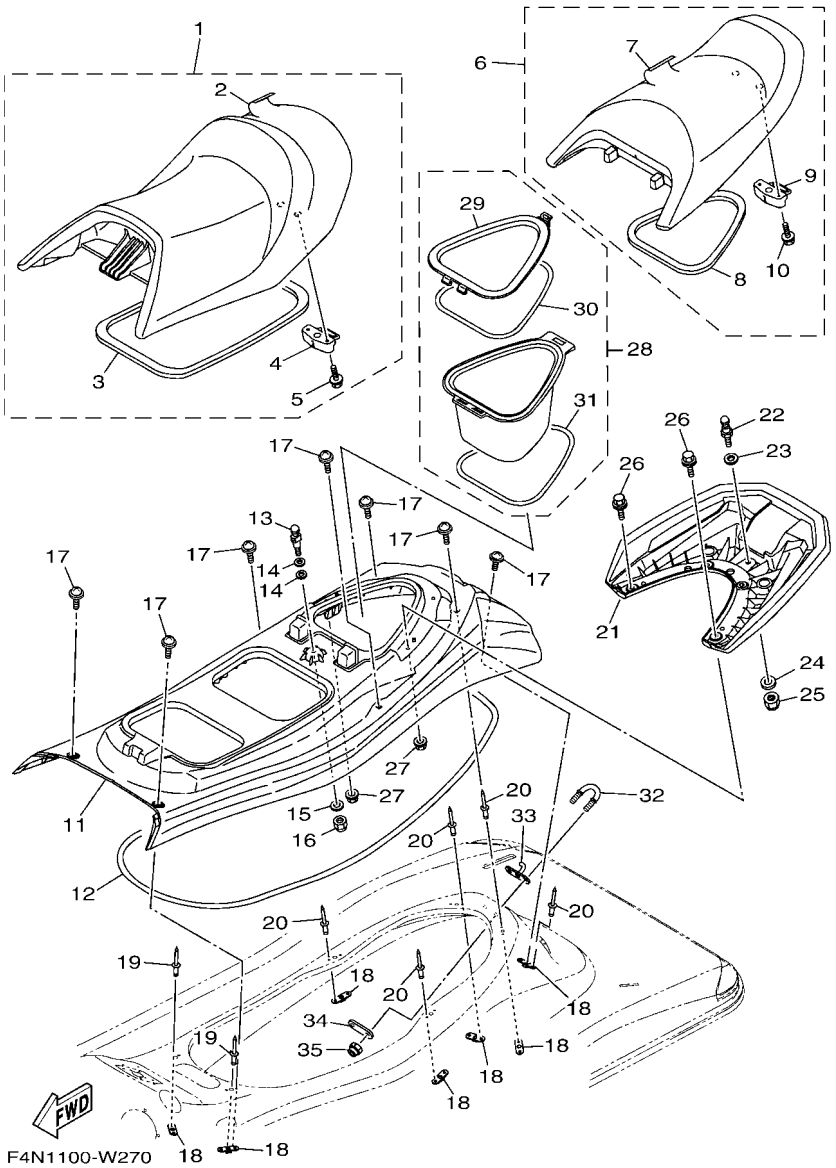

FIG. 27 SEAT & UNDER LOCKER

REF. NO.	PART NO.	DESCRIPTION	F9L2					REMARKS
1	F6G–U371A–90	DOUBLE SEAT ASSY	1					FOR BLUE
	F6G–U371A–A0	DOUBLE SEAT ASSY	1					FOR RED
2	F6G–U371B–90	.COVER, SEAT 1	1					FOR BLUE
	F6G–U371B–A0	.COVER, SEAT 1	1					FOR RED
3	F4P–U2664–00	.PACKING	1					
4	F2C–U3850–00	.SEAT LOCK ASSY	1					
5	90119–069UP	.BOLT, WITH WASHER	2					
6	F6G–U372A–90	SINGLE SEAT ASSY	1					FOR BLUE
	F6G–U372A–A0	SINGLE SEAT ASSY	1					FOR RED
7	F6G–U372B–90	.COVER, SEAT	1					FOR BLUE
	F6G–U372B–A0	.COVER, SEAT	1					FOR RED
8	F4P–U266D–00	.PACKING 5	1					
9	F1B–U3850–02	.SEAT LOCK ASSY	1					
10	90119–069UP	.BOLT, WITH WASHER	2					
11	F4P–U3743–00	BASE, SEAT 2	1					
12	F4P–U266B–00	PACKING 3	1					
13	GH1–U3774–00	PIN	1					
14	90201–109U6	WASHER, PLATE	2					
15	9299R–10200	WASHER	1					
16	9572R–10300	NUT, NYLON	1					
17	F3Y–U491K–02	BOLT, SPECIAL	7					
18	F2C–U826C–00	BRACKET	7					
19	F4P–U516R–01	RIVET 1	4					
20	90267–489U1	RIVET,BLIND	10					
21	F4N–U271B–00	GRIP, HAND	1					
22	GH1–U3774–00	PIN	1					
23	90201–109U6	WASHER, PLATE	1					

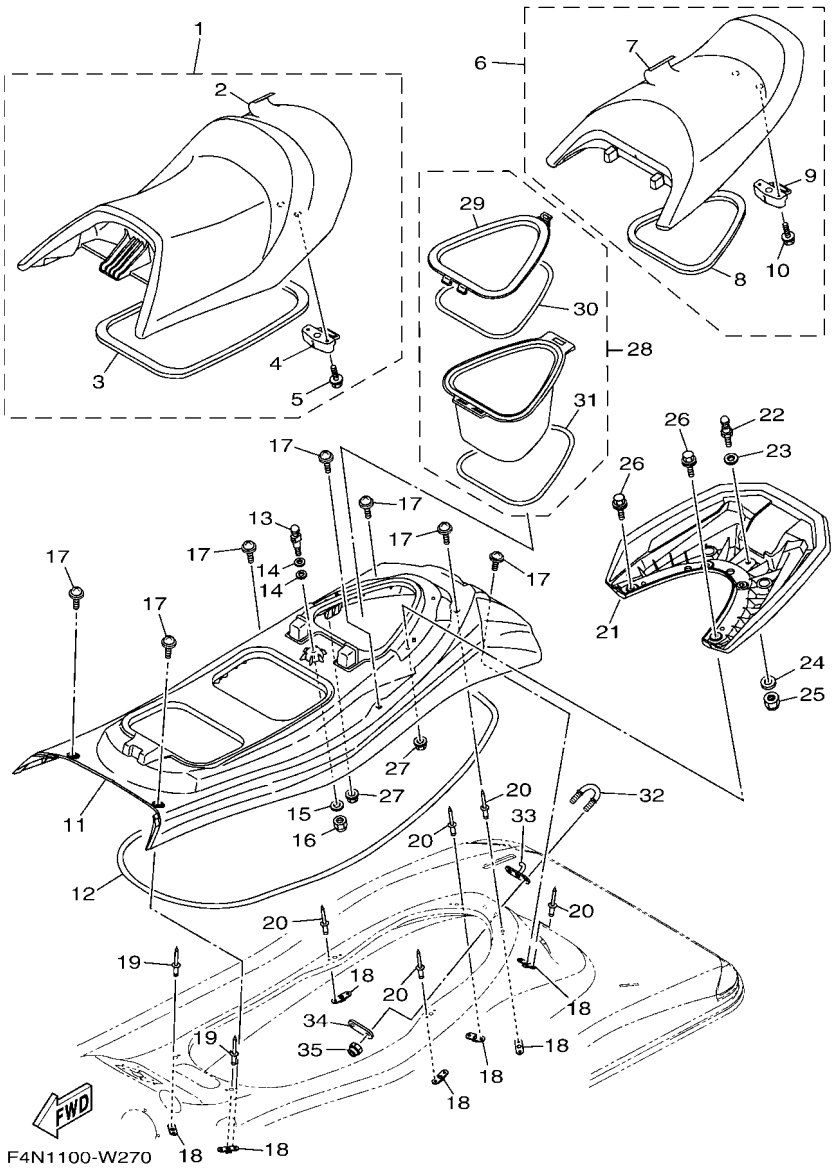

FIG. 27 SEAT & UNDER LOCKER

REF. NO.	PART NO.	DESCRIPTION	F9L2					REMARKS
24	9299R–10200	WASHER	1					
25	9572R–10300	NUT, NYLON	1					
26	90119–08829	BOLT, WITH WASHER	4					
27	F3Y–U142L–00	NUT, LOCK	4					
28	F4P–U591A–00	CASE ASSY 1	1					
29	F4P–U591C–00	.CAP,CASE	1					
30	F4P–U591D–00	.PACKING,CASE	1					
31	F4P–U266E–00	.PACKING 6	1					
32	F2N–U1628–10	STERN EYE	1					
33	F4G–U372G–00	EYELET	1					
34	GP7–U4953–10	PLATE A	1					
35	9572R–08300	NUT, FLANGE	2					

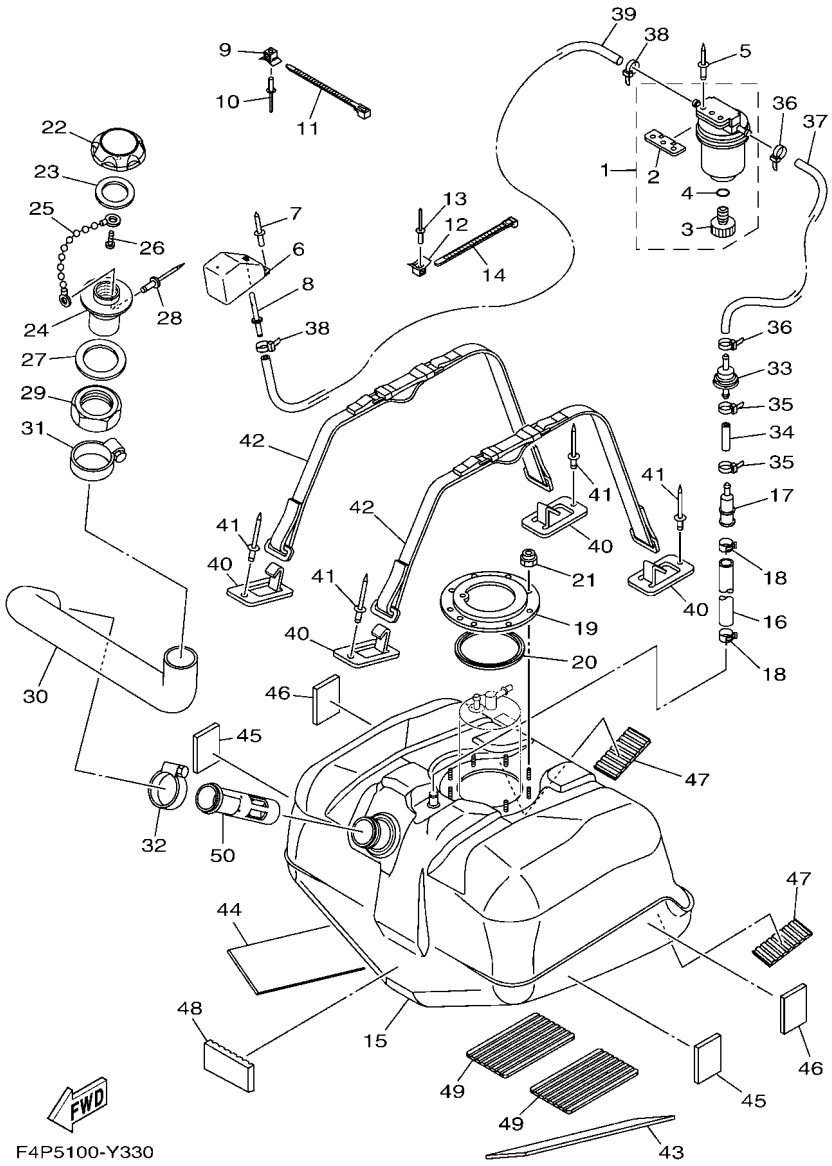

FIG. 28 FUEL TANK

REF. NO.	PART NO.	DESCRIPTION	F9L2					REMARKS
1	F2F–6214A–00	FILTER, VENT ASSY	1					
2	EW2–62142–00	.PLATE, FILTER	1					
3	70R–24543–00	.PLUG, DRAIN	1					
4	70R–24489–00	.O-RING	1					
5	90267–489U2	RIVET, BLIND	2					
6	GP7–62159–02	SOCKET, VENTILATION	1					
7	90267–489U6	RIVET, BLIND	2					
8	F1G–62149–00	PIPE, VENTILATION	1					
9	F1W–U828M–00	BASE, CLAMP	1					
10	90267–48806	RIVET, BLIND	1					
11	90464–32801	CLAMP	1					
12	F1W–U828M–00	BASE, CLAMP	1					
13	90267–48806	RIVET, BLIND	1					
14	90464–32801	CLAMP	1					
15	F4P–U7711–00	TANK, FUEL	1					
16	F4P–U785G–00	HOSE, AIR VENT	1					
17	F4P–U8167–10	CONNECTOR	1					
18	90467–190A2	CLIP	2					
19	F1B–U7773–00	RING	1					
20	F1B–67747–00	PACKING, SEAL	1					
21	9572R–06300	NUT, NYLON	9					
22	F2N–U7831–10	CAP, FUEL FILLER	1					BLACK
23	GP7–U7832–01	PACKING	1					
24	GP7–U7833–11	SOCKET	1					BLACK
25	GP7–U7835–00	CHAIN BALL	1					
26	90169–049U1	SCREW, TRUSS HEAD TAPPING	1					
27	GP7–U7834–00	PACKING FUEL FILLER	1					

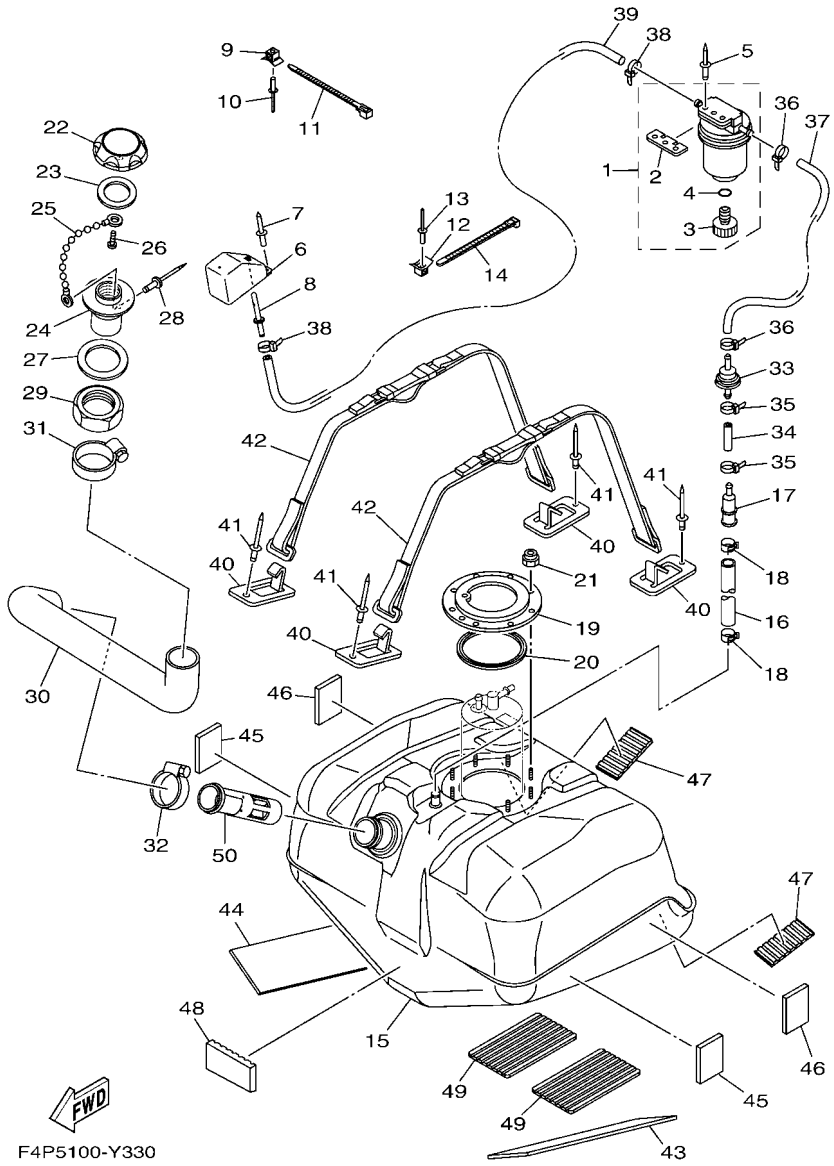

FIG. 28 FUEL TANK

REF. NO.	PART NO.	DESCRIPTION	F9L2					REMARKS
28	90267–329UR	RIVET, BLIND	1					
29	GP7–U783F–00	NUT, FUEL FILLER	1					
30	F4P–U7844–02	HOSE	1					
31	90601–155U4	BAND, HOSE 55	1					
32	90601–155U4	BAND, HOSE 55	1					
33	F3Y–U7767–00	CHECK VALVE	1					
34	GP7–U785H–01	HOSE, AIR VENT 3	1					
35	90465–11829	CLAMP	2					
36	90465–11829	CLAMP	2					
37	F1K–U785G–01	HOSE, AIR VENT	1					
38	90465–11829	CLAMP	2					
39	F0D–U7856–11	HOSE, AIR VENT 3	1					
40	F1K–U5772–04	HOOK A	4					
41	90267–489U1	RIVET,BLIND	4					
42	F2S–67743–01	BELT, TANK 1	2					
43	F2S–U759B–00	MAT 1	1					
44	F2S–U759B–00	MAT 1	1					
45	F1W–U759C–01	MAT 2	2					
46	F1W–U759C–01	MAT 2	2					
47	F1K–U759C–00	MAT 2	2					
48	F1K–U759C–00	MAT 2	1					
49	F1S–U8221–00	PAD, BATTERY	2					
50	F4L–U773D–00	TUBE	1					

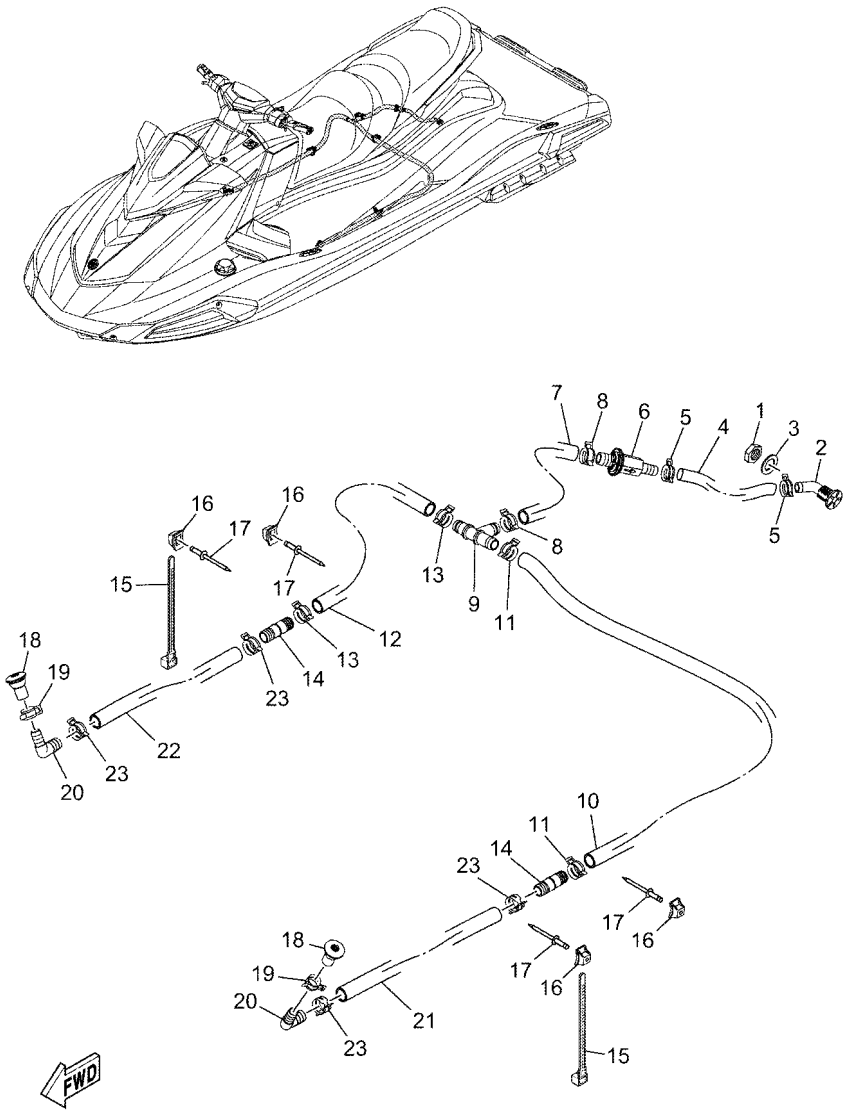

FIG. 29 BILGE PUMP

REF. NO.	PART NO.	DESCRIPTION	F9L2					REMARKS
1	F3X–U224B–00	NUT, DRAIN 1	1					
2	F3X–U224C–00	BODY, DRAIN 1	1					
3	F3X–U7564–00	GASKET	1					
4	F4P–U7628–00	HOSE, DRAIN 3	1					
5	90467–17802	CLIP	2					
6	F3X–U7767–00	CHECK VALVE	1					
7	F4P–U7626–00	HOSE 1	1					
8	90601–200U1	BAND	2					
9	F3X–U7857–00	JOINT,HOSE	1					
10	F4P–U7629–01	HOSE, DRAIN 2	1					
11	90601–200U1	BAND	2					
12	F7L–U2249–00	HOSE, DRAIN	1					
13	90601–200U1	BAND	2					
14	F3X–U7617–00	JOINT, DRAIN	2					
15	90601–200U2	BAND	2					
16	F1W–U828M–00	BASE, CLAMP	4					
17	90267–48806	RIVET, BLIND	4					
18	F4P–U2255–00	PLUG,DRAIN	2					
19	90601–200U1	BAND	2					
20	F3X–U8377–00	CONNECTOR	2					
21	F4P–U7626–00	HOSE 1	1					
22	F7L–U7626–00	HOSE 1	1					
23	90601–200U1	BAND	4					

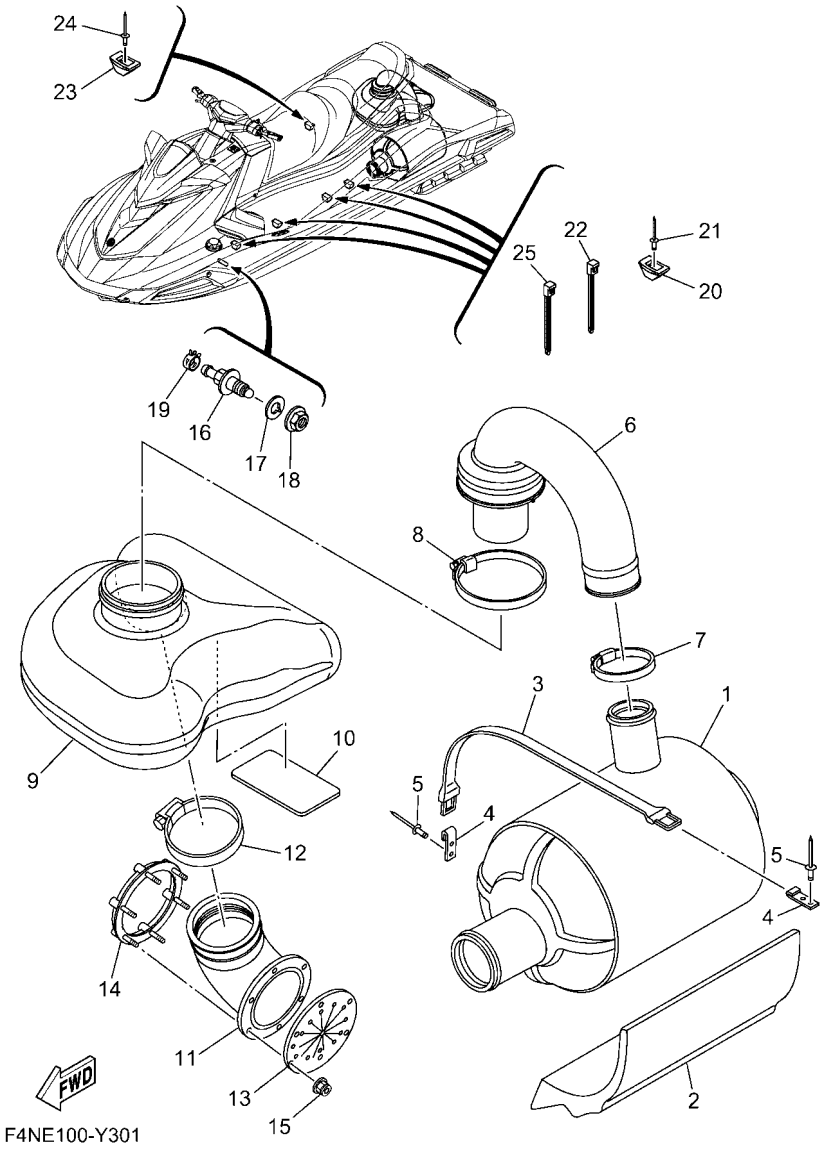

FIG. 30 EXHAUST 3

REF. NO.	PART NO.	DESCRIPTION	F9L2					REMARKS
1	F4N–U7550–00	WATER LOCK COMP.	1					
2	F4G–U892F–10	FLOATATION, BASE 1	1					
3	EW2–67821–00	BAND, FUEL TANK	1					
4	GA7–65772–00	HOOK A	2					
5	90267–489U1	RIVET,BLIND	4					
6	F4G–U7555–00	HOSE, EXHAUST	1					
7	90601–179U8	BAND, HOSE 79	1					
8	90450–99804	HOSE CLAMP ASSY	1					
9	F3X–U4261–00	TANK, WATER	1					
10	F1S–U8221–00	PAD, BATTERY	1					
11	F3X–U758D–00	HOSE,EXHAUST 3	1					
12	90450–99801	HOSE CLAMP ASSY	1					
13	F1B–U751G–10	VALVE, EXHAUST	1					
14	F1S–U757B–01	PLATE	1					
15	F2N–U142L–00	NUT, LOCK	6					
16	F2C–U753B–01	PILOT, WATER	1					
17	F2C–U7564–02	GASKET	1					
18	F2C–U2733–00	NUT	1					
19	90467–150A5	CLIP	1					
20	F1W–U828M–00	BASE, CLAMP	1					
21	90267–48806	RIVET, BLIND	1					
22	90464–32801	CLAMP	2					
23	F1W–U828M–00	BASE, CLAMP	1					
24	90267–48806	RIVET, BLIND	1					
25	90601–200U2	BAND	3					

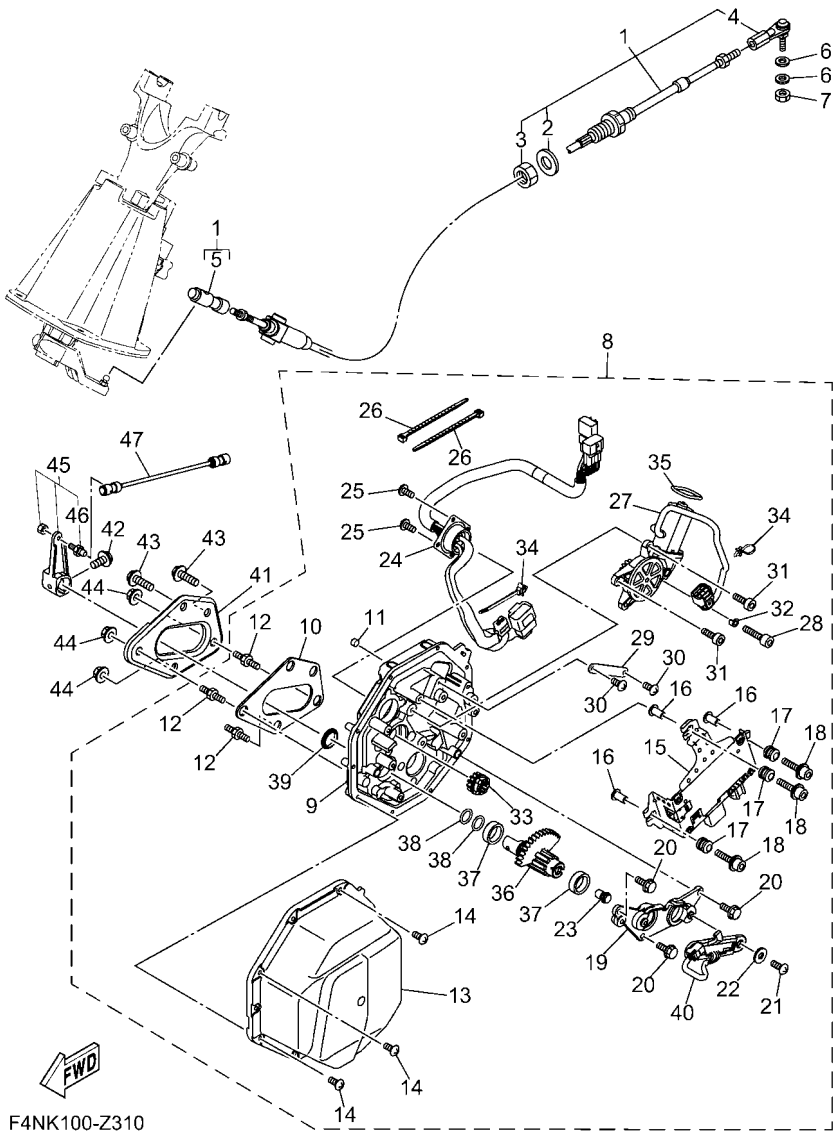

FIG. 31 CONTROL CABLE

REF. NO.	PART NO.	DESCRIPTION	F9L2					REMARKS
1	F4N–61481–01	CABLE, STEERING	1					
2	F1B–61438–00	.PACKING C	1					
3	F1B–6151S–01	.NUT	1					
4	F1B–61461–02	.STUD, JOINT BALL	1					
5	F2N–61460–00	.BALL JOINT ASSY	1					
6	90201–06906	WASHER, PLATE	2					
7	9538R–06700	NUT	1					
8	F4N–6140B–03	MOTOR ASSY	1					
9	F4S–6152K–00	.HOUSING	1					
10	F4P–63262–00	.SEAL	1					
11	F3J–613D0–00	.PLUG	1					
12	F3J–67369–00	.BOLT, STUD	3					
13	F3Y–6143J–00	.COVER	1					
14	F3Y–68198–00	.SCREW	10					
15	F4S–68197–01	.CONTROL UNIT	1					
16	90387–06119	.COLLAR	3					
17	6A0–82317–01	.DAMPER, IGNITION COIL	3					
18	F3J–613B4–20	.BOLT	3					
19	F4P–61256–00	.PLATE	1					
20	F3Y–613B3–00	.BOLT, HEXAGON	3					
21	F3J–68198–20	.SCREW	2					
22	F3J–613C3–10	.WASHER, PLAIN	2					
23	F3J–60428–00	.MAGNET, SENSOR	1					
24	F4N–68270–00	.WIRE HARNESS ASSY.	1					
25	F3J–68198–00	.SCREW	4					
26	F3J–68273–00	.CLAMP	2					
27	F4S–68352–00	.MOTOR	1					

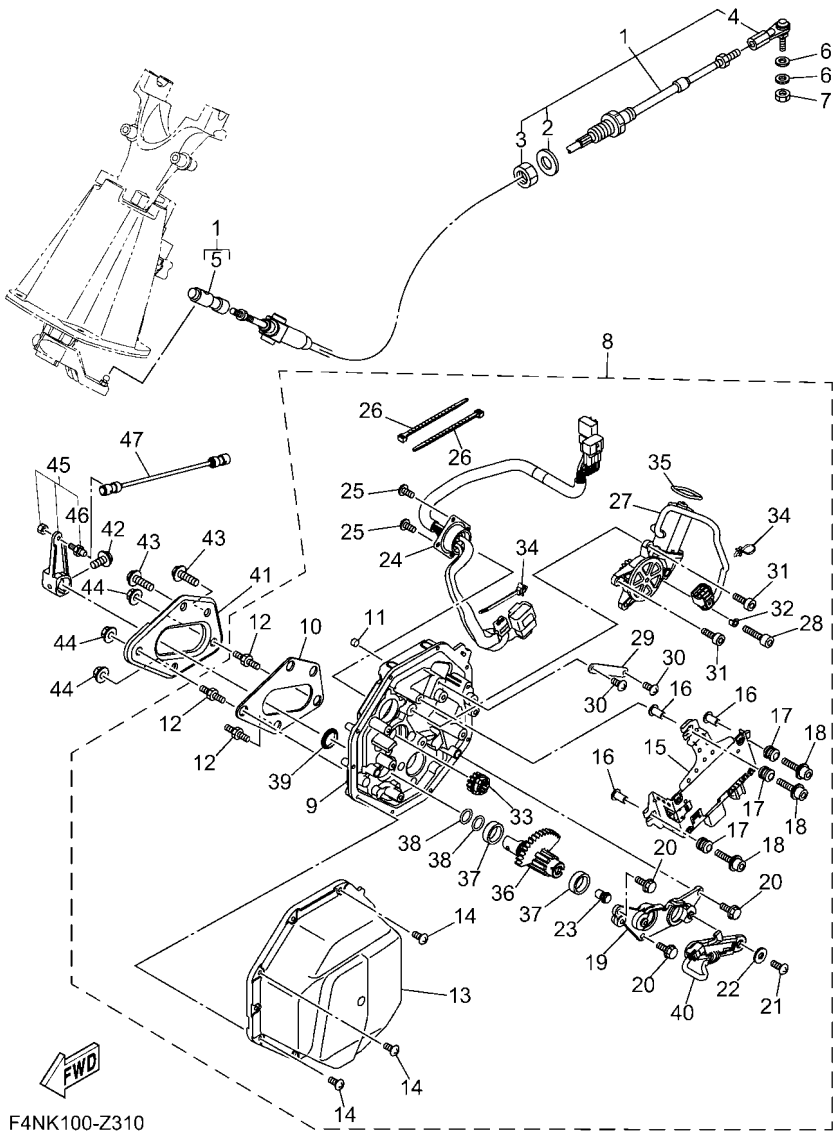

FIG. 31 CONTROL CABLE

REF. NO.	PART NO.	DESCRIPTION	F9L2					REMARKS
28	F3J–613B4–00	.BOLT	1					
29	F3Y–61348–00	.PLATE	1					
30	F3J–68198–20	.SCREW	2					
31	F3J–613B4–10	.BOLT	2					
32	F3J–61492–00	.SPACER	1					
33	F4P–60211–00	.GEAR 1	1					
34	F4P–68273–00	.CLAMP	2					
35	F4P–613A5–10	.O-RING	1					
36	F3Y–60221–10	.SHAFT, 1	1					
37	F3Y–61344–00	.BUSH	2					
38	F4P–613A5–00	.O-RING	2					
39	F4P–61344–00	.BUSH	1					
40	F4S–85887–00	.SENSOR, ANGLE	1					
41	F4P–U8285–00	PLATE	1					
42	90119–06893	BOLT, WITH WASHER	1					
43	90119–08851	BOLT, WITH WASHER	2					
44	F3Y–U142L–00	NUT, LOCK	3					
45	F3Y–6150F–00	SHIFT ARM ASSY	1					
46	6R7–42316–00	.BOLT, JOINT	1					
47	F3J–6150D–00	ROD ASSY 2	1					

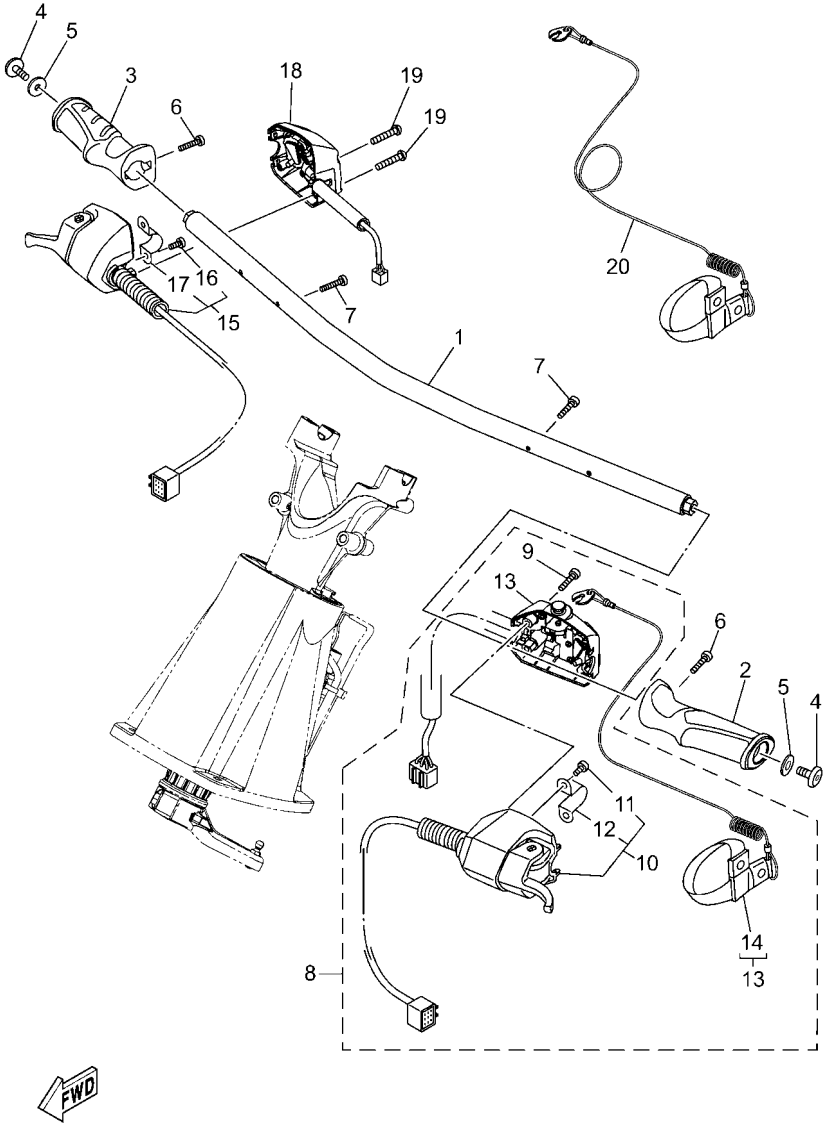

F7M6100-0350

FIG. 32 STEERING 1

REF. NO.	PART NO.	DESCRIPTION	F9L2					REMARKS
1	F4N–U1552–00	HANDLE	1					
2	F4P–U155C–00	GRIP,HANDLE	1					
3	F4P–U155D–00	GRIP, HANDLE	1					
4	90110–06382	BOLT, HEXAGON SOCKET HEAD	2					
5	90201–068G0	WASHER, PLATE	2					
6	F2S–U1516–00	BOLT	2					
7	91380–04030	BOLT	2					
8	F7K–68310–11	SWITCH BOX ASSY	1					
9	6CS–6725F–00	.BOLT, THROTTLE	2					
10	F4P–26411–12	.SHIFT LEVER ASSY	1					
11	F4P–6725F–00	..BOLT, THROTTLE	2					
12	F4P–61368–00	..SUPPORT	1					
13	F7K–8259E–10	.SWITCH ASSY	1					
14	EW2–68348–00	..LANYARD, STOP SWITCH	1					
15	F4P–14305–12	THROTTLE LEVER COMP	1					
16	F4P–6725F–00	.BOLT, THROTTLE	2					
17	F4P–61368–00	.SUPPORT	1					
18	F7K–81860–00	SWITCH ASSY	1					
19	6CS–6725F–00	BOLT, THROTTLE	2					
20	EW2–68348–00	LANYARD, STOP SWITCH	1					

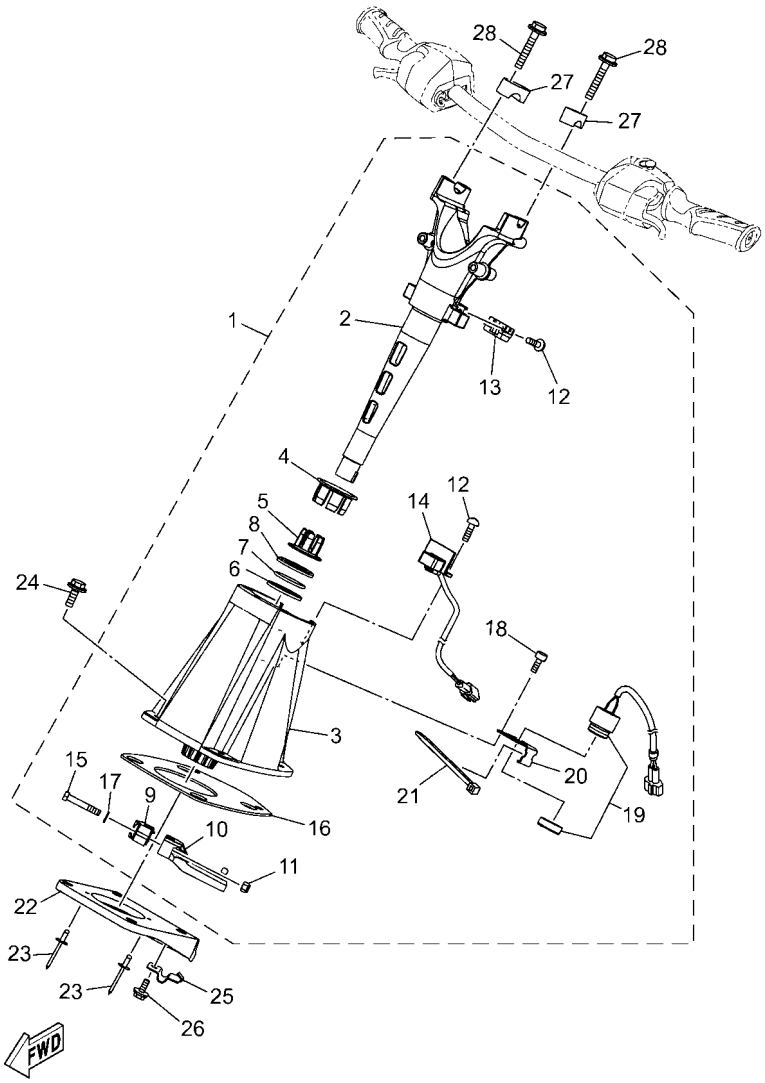

F7M6100-0360

FIG. 33 STEERING 2

REF. NO.	PART NO.	DESCRIPTION	F9L2					REMARKS
1	F4N–61400–10	STEERING MASTER ASSY	1					
2	F4N–6152D–00	.SHAFT	1					
3	F5M–6152M–00	.HOUSING ASSY	1					
4	F5M–6134M–00	.BUSH	1					
5	F5M–6134M–10	.BUSH	1					
6	F5M–61554–00	.PLATE, RETAINING	1					
7	F5M–613C5–00	.O-RING	1					
8	F5M–6155G–00	.PLATE, COVER	1					
9	F5M–61339–00	.HOLDER, STOPPER	1					
10	F5M–6153R–00	.ARM ASSY.	1					
11	95720–08300	.NUT, SELF-LOCKING	2					
12	F2X–613C1–00	.SCREW	3					
13	F2X–6838C–01	.MAGNET	1					
14	F2X–6838B–02	.SENSOR, MAGNET	1					
15	F1K–61355–00	.BOLT	2					
16	F5M–6143C–00	.SEAL, RUBBER	1					
17	F5M–6153P–00	.WASHER	2					
18	F4N–613C1–00	.SCREW	2					
19	F1S–68341–00	.BUZZER	1					
20	F2P–6146H–00	.SPACER, BRKT.	1					
21	703–82591–00	.BAND	1					
22	F3Y–U1467–00	BRACKET,STOPPER CABLE	1					
23	90267–489U2	RIVET, BLIND	2					
24	90119–08836	BOLT, WITH WASHER	4					
25	F1K–U1468–03	STOPPER, CABLE	1					
26	90119–069UH	BOLT, WITH WASHER	1					
27	EU0–23814–32	HOLDER, HANDLE UPPER	2					

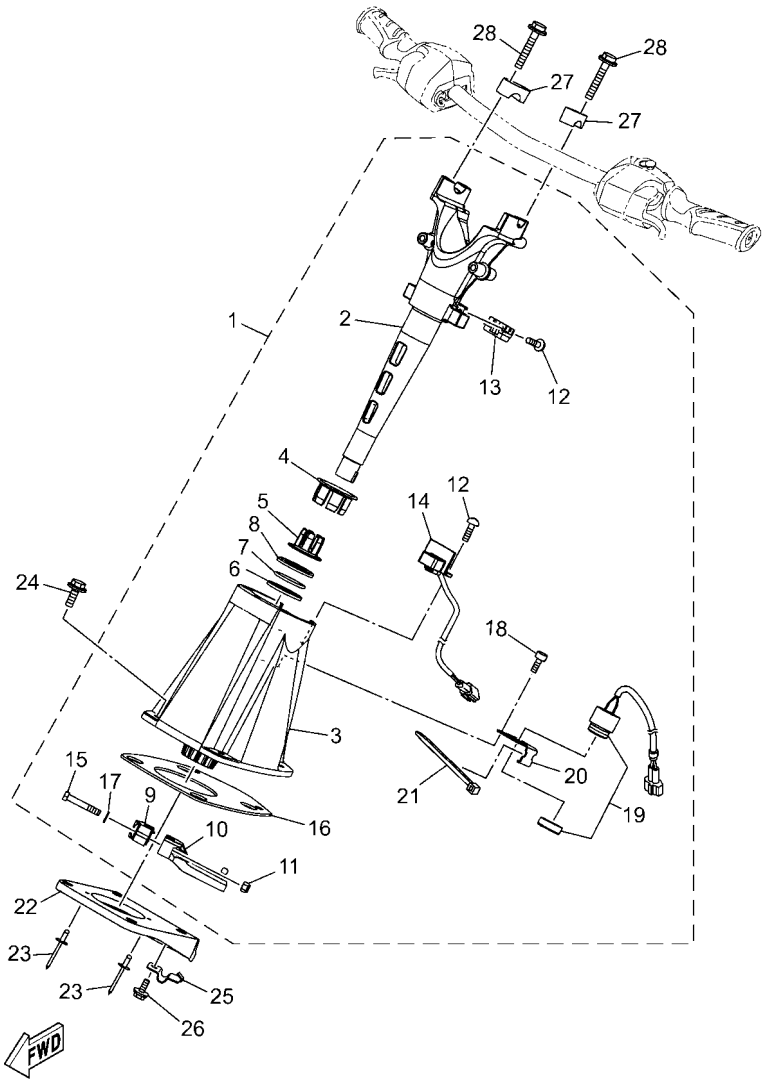

F7M6100-0360

FIG. 33 STEERING 2

REF. NO.	PART NO.	DESCRIPTION	F9L2					REMARKS
28	90119–08827	BOLT, WITH WASHER	4					

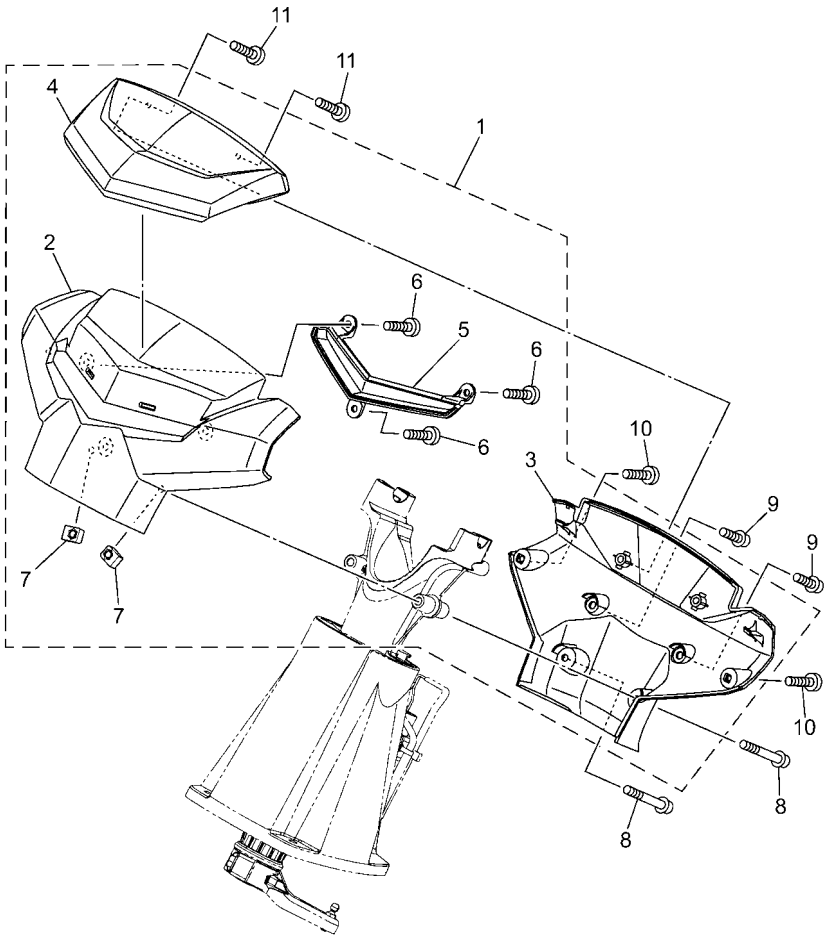

F7M6100-0370

FIG. 34 STEERING 3

REF. NO.	PART NO.	DESCRIPTION	F9L2					REMARKS
1	F4N–U142A–90	STEERING PAD COMP	1					
2	F4N–U143D–00	.PAD, STEERING 1	1					
3	F4N–U143E–00	.PAD, STEERING 2	1					
4	F4N–U142D–00	.COVER, PAD	1					
5	F4N–U142M–60	.BASE, PAD	1					
6	F2S–U13C1–00	.SCREW	3					
7	F3X–U517E–00	.NUT	2					
8	F3Y–U1355–01	BOLT	2					
9	F3Y–U2624–00	BOLT	2					
10	F4N–U13C1–00	SCREW	2					
11	F2S–U13C1–00	SCREW	2					

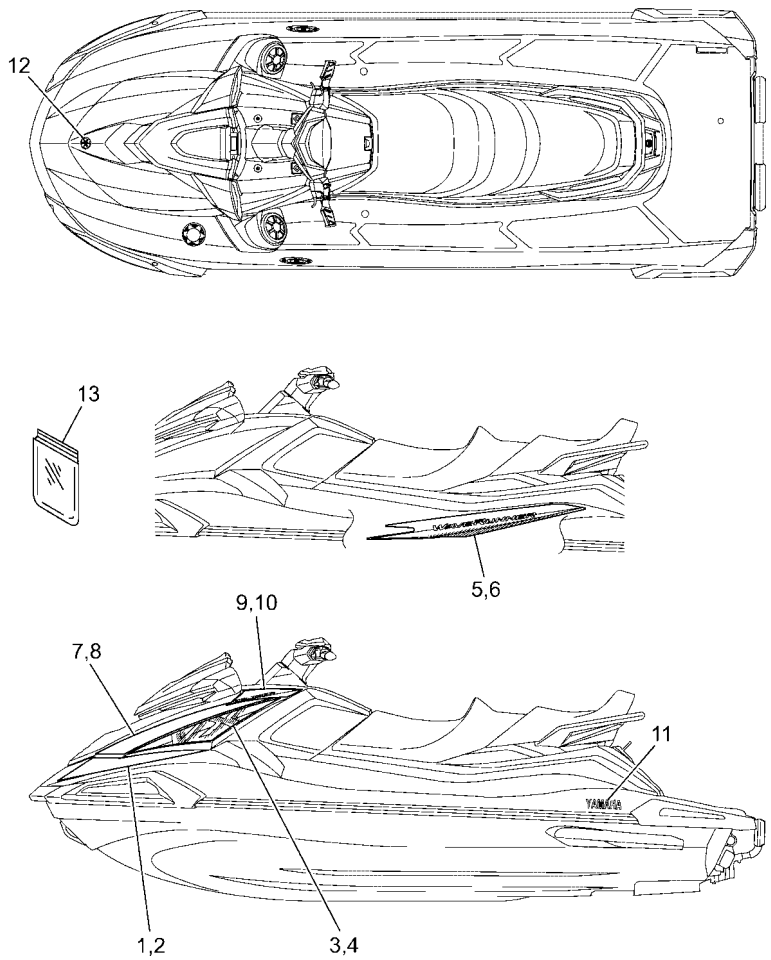

F9L2100-1350

FIG. 35 GRAPHICS

REF. NO.	PART NO.	DESCRIPTION	F9L2					REMARKS
1	F9L–U417D–10	GRAPHIC 3 (LH)	1					FOR BLUE
	F9L–U417D–20	GRAPHIC 3 (LH)	1					FOR RED
2	F9L–U417E–10	GRAPHIC 4 (RH)	1					FOR BLUE
	F9L–U417E–20	GRAPHIC 4 (RH)	1					FOR RED
3	F9L–U417F–10	GRAPHIC 5 (LH)	1					FOR BLUE
	F9L–U417F–20	GRAPHIC 5 (LH)	1					FOR RED
4	F9L–U417G–10	GRAPHIC 6 (RH)	1					FOR BLUE
	F9L–U417G–20	GRAPHIC 6 (RH)	1					FOR RED
5	F9L–U417H–10	GRAPHIC 7 (LH)	1					FOR BLUE
	F9L–U417H–20	GRAPHIC 7 (LH)	1					FOR RED
6	F9L–U417J–10	GRAPHIC 8 (RH)	1					FOR BLUE
	F9L–U417J–20	GRAPHIC 8 (RH)	1					FOR RED
7	F9L–U417K–10	GRAPHIC 9 (LH)	1					FOR BLUE
	F9L–U417K–20	GRAPHIC 9 (LH)	1					FOR RED
8	F9L–U417L–10	GRAPHIC B (RH)	1					FOR BLUE
	F9L–U417L–20	GRAPHIC B (RH)	1					FOR RED
9	F9L–U417P–10	GRAPHIC E (LH)	1					FOR BLUE
	F9L–U417P–20	GRAPHIC E (LH)	1					FOR RED
10	F9L–U417R–10	GRAPHIC F (RH)	1					FOR BLUE
	F9L–U417R–20	GRAPHIC F (RH)	1					FOR RED
11	F7M–U411C–40	EMBLEM, YAMAHA	2					FOR BLUE
	F9L–U411C–20	EMBLEM, YAMAHA	2					FOR RED
12	F3Y–U411H–02	EMBLEM, TUNING FORK	1					
13	F3Y–U5901–00	BAG, VINYL	1					

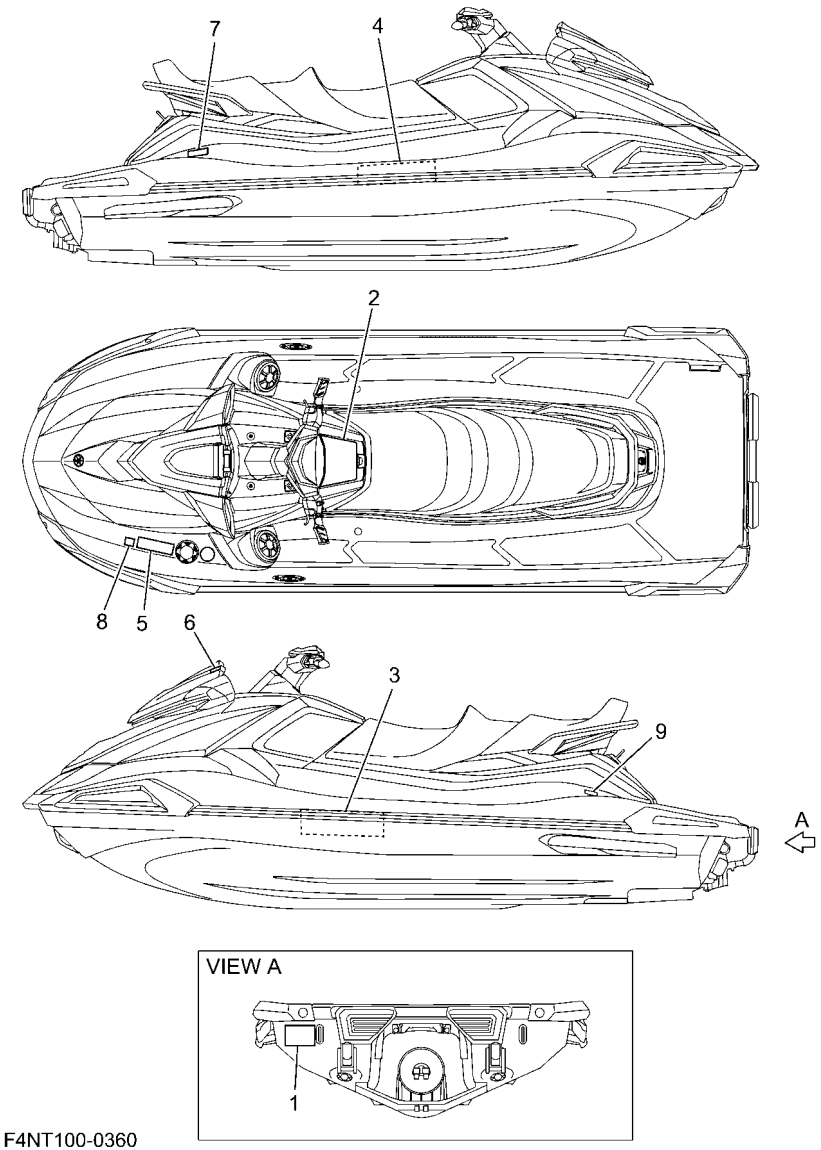

F4NT100-0360

FIG. 36 IMPORTANT LABELS

REF. NO.	PART NO.	DESCRIPTION	F9L2					REMARKS
1	F7M–U418F–00	LABEL, RIGHTING	1					FOR BLUE
	F7M–U418F–10	LABEL, RIGHTING	1					FOR RED
2	F4N–U41B1–10	LABEL, WARNING UNIFORM 1	1					
3	F7M–U41B1–00	LABEL, WARNING UNIFORM 1	1					
4	F7M–U41B1–20	LABEL, WARNING UNIFORM 1	1					
5	F1S–U415B–11	LABEL, WARNING(FUEL)	1					
6	F7M–U41F5–20	LABEL, FIRE EXTINGUISHER 1	1					FOR BLUE
	F7M–U41F5–30	LABEL, FIRE EXTINGUISHER 1	1					FOR RED
7	F3V–U416A–10	WARNING LABEL ASSY	1					
8	B4F–F817K–00	LABEL, FUEL	1					FOR EUR
9	F7M–U419E–00	LABEL 4	1					FOR CAN

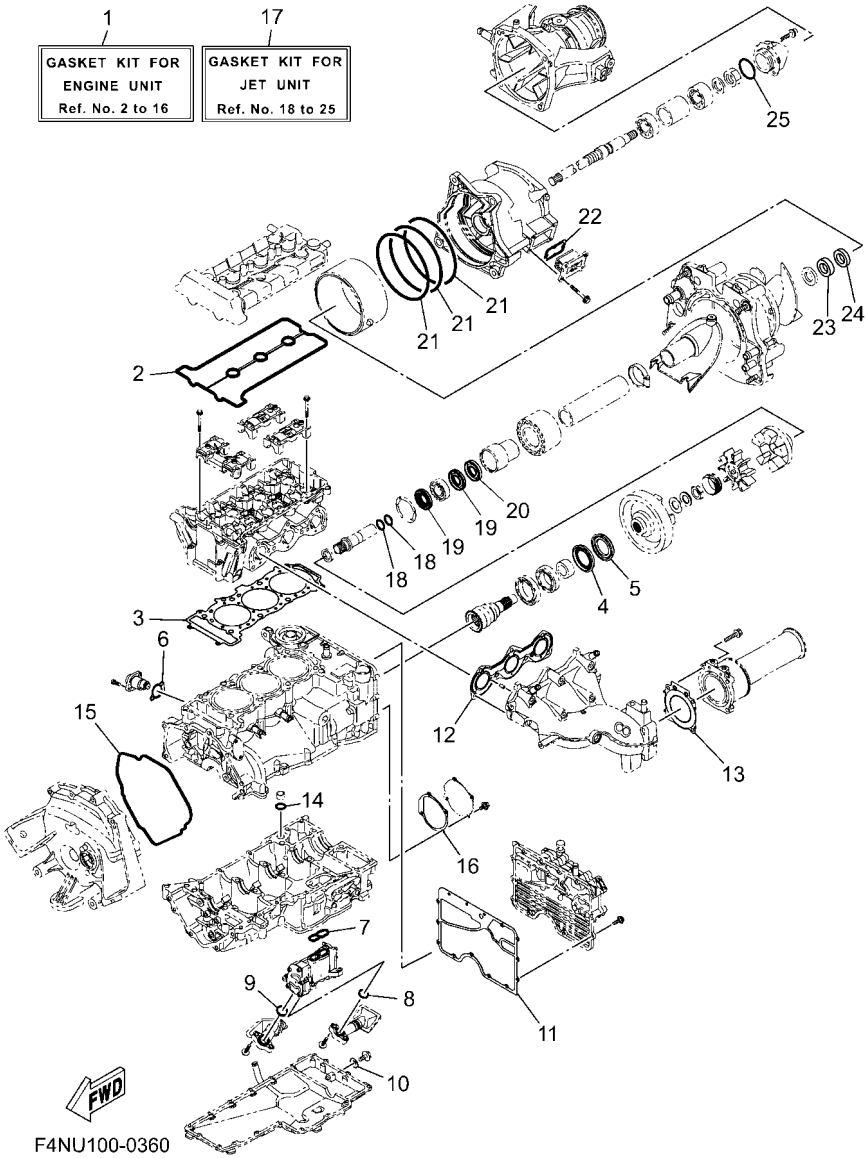

FIG. 37 REPAIR KIT 1

REF. NO.	PART NO.	DESCRIPTION	F9L2					REMARKS
1	6KU–W0001–01	GASKET KIT FOR ENGINE UNIT	1					
2	6EY–11193–00	.GASKET, HEAD COVER 1	1					
3	6EY–11181–01	.GASKET, CYLINDER HEAD 1	1					
4	93101–40001	.OIL SEAL	1					
5	93101–40002	.OIL SEAL	1					
6	2C0–12213–00	.GASKET, TENSIONER CASE	1					
7	6EY–13563–00	.GASKET	1					
8	6EY–13477–00	.GASKET	1					
9	6EY–13476–00	.GASKET	1					
10	90430–08209	.GASKET	1					
11	6EY–15453–01	.GASKET	1					
12	6GA–14613–00	.GASKET, EXHAUST PIPE	1					
13	6JS–14749–00	.GASKET, MUFFLER DAMPER 2	1					
14	93210–17010	.O-RING	1					
15	6EY–15461–00	.GASKET, CRANKCASE COVER 2	1					
16	6EY–15463–01	.GASKET, 2	1					
17	6JS–W0001–2A	GASKET KIT FOR JET UNIT	1					
18	93210–19812	.O-RING	2					
19	93101–25M55	.OIL SEAL	2					
20	93101–25M56	.OIL SEAL	1					
21	93211–65801	.O-RING	3					
22	66V–42414–00	.O-RING	1					
23	93101–28M66	.OIL SEAL	1					
24	93101–28002	.OIL SEAL	1					
25	93210–54010	.O-RING	1					

PART NO.	REF. NO.
6EY–11102–00	1 – 2
6EY–11110–00	1 – 1
6EY–11119–00	1 – 20
6EY–1111E–10	1 – 18
5VY–1111G–00	1 – 15
6EY–11125–00	8 – 25
6EY–11126–10	8 – 27
2C0–11133–11	1 – 3
8HF–11134–10	1 – 4
6EY–11164–00	8 – 20
6EY–11166–10	8 – 16
6EY–11181–01	1 – 16
	37 – 3
6EY–11191–10	1 – 9
6EY–11193–00	1 – 11
	37 – 2
69J–11301–11	2 – 22
68V–11325–02	2 – 23
67F–11328–01	2 – 24
6EY–11400–00	3 – 1
6EY–11406–10	3 – 14
2HC–11407–00	3 – 25
3LD–11416–10	3 – 6
3LD–11416–20	3 – 6
3LD–11416–30	3 – 6
3LD–11416–40	3 – 6
3LD–11416–50	3 – 6
3LD–11416–60	3 – 6
3LD–11416–70	3 – 6
8ES–11428–01	2 – 8
8ES–11454–00	3 – 27
2HC–11464–00	3 – 30
6EY–11478–00	3 – 29
6EY–11531–00	3 – 26
6JS–11571–00	3 – 20
8KH–11603–02	3 – 8
8KH–11631–00	3 – 7
6EY–11633–00	3 – 9
B0F–11650–00	3 – 2
5JW–11654–00	3 – 3
5JW–11656–00	3 – 5
5JW–11656–10	3 – 5
5JW–11656–20	3 – 5
5JW–11656–30	3 – 5
5JW–11656–40	3 – 5
5JW–11656–50	3 – 5
6EY–11917–10	3 – 17
8GL–12111–10	4 – 5

PART NO.	REF. NO.
8GL–12113–00	4 – 8
1RC–12116–00	4 – 7
3D7–12117–00	4 – 9
1WG–12118–00	4 – 10
2HC–12119–00	4 – 11
8GL–12121–10	4 – 6
6EY–12153–01	4 – 13
1HX–12168–00	4 – 12
1HX–12168–20	4 – 12
1HX–12168–40	4 – 12
1HX–12168–60	4 – 12
1HX–12168–80	4 – 12
1HX–12168–A0	4 – 12
1HX–12168–F0	4 – 12
1HX–12168–H1	4 – 12
1HX–12168–K1	4 – 12
1HX–12168–M1	4 – 12
1HX–12168–R1	4 – 12
1HX–12168–U1	4 – 12
1HX–12168–W1	4 – 12
1HX–12168–Y1	4 – 12
1HX–12169–11	4 – 12
1HX–12169–31	4 – 12
1HX–12169–50	4 – 12
1HX–12169–70	4 – 12
1HX–12169–90	4 – 12
1HX–12169–E0	4 – 12
1HX–12169–G0	4 – 12
1HX–12169–J0	4 – 12
1HX–12169–L0	4 – 12
1HX–12169–N0	4 – 12
1HX–12169–T0	4 – 12
6EY–12170–00	4 – 1
2HC–12176–00	4 – 3
6EY–12180–00	4 – 2
8KH–12210–00	4 – 15
2C0–12213–00	4 – 16
	37 – 6
5BE–12241–01	1 – 10
6EY–12251–00	4 – 18
2HC–12252–00	4 – 19
6EY–12279–00	4 – 21
6D3–12411–00	10 – 27
6EY–12413–00	10 – 28
6EY–12577–00	10 – 21
6S5–12579–00	10 – 23
6EY–12580–00	10 – 3
6EY–12584–00	10 – 8

PART NO.	REF. NO.
6JS–12589–00	10 – 13
6EY–12880–01	5 – 8
8ES–13284–00	2 – 17
6EY–13300–00	7 – 1
6EY–13355–00	7 – 2
6EY–13405–00	7 – 5
6EY–13406–00	7 – 8
6EY–13417–11	7 – 18
5GH–13440–90	7 – 17
6EY–13455–00	7 – 20
6EY–13470–03	8 – 2
6EY–13476–00	7 – 9
	37 – 9
6EY–13477–00	7 – 6
	37 – 8
6EY–13532–00	5 – 13
6EY–13556–10	8 – 3
8FP–13556–10	5 – 11
6EY–13557–10	8 – 5
6EY–13563–00	7 – 4
	37 – 7
6EY–13641–03	5 – 2
6EY–13750–01	5 – 1
2HC–13761–00	5 – 5
6S5–13907–05	18 – 49
6EY–14126–00	5 – 4
6EY–14156–00	5 – 3
68V–1416A–00	5 – 6
F4P–14305–12	32 – 15
6EY–14410–10	6 – 7
6EY–14419–00	6 – 12
6EY–14436–00	6 – 11
6BH–14445–00	5 – 12
6EY–14451–00	6 – 8
6EY–14452–00	6 – 10
6EY–14462–00	6 – 9
6EY–14470–01	6 – 16
6EY–14485–00	6 – 13
6GA–14613–00	9 – 1
	37 – 12
6JS–14711–00	9 – 2
6EY–14719–00	9 – 11
6JS–14749–00	9 – 10
	37 – 13
6EY–14784–00	9 – 9
6EY–15109–08	2 – 2
6EY–15362–10	8 – 14
3Y1–15363–10	1 – 12

PART NO.	REF. NO.
4JT–15381–01	2 – 6
6EY–15421–00	2 – 18
6EY–15453–01	8 – 1
	37 – 11
6EY–15461–00	2 – 19
	37 – 15
6EY–15463–01	2 – 29
	37 – 16
6EY–15486–00	7 – 14
2HC–15512–00	14 – 2
8FA–15515–00	14 – 1
8ES–15521–00	14 – 3
6EY–15589–01	2 – 28
6EY–15590–00	14 – 4
EU0–23814–32	33 – 27
70R–24489–00	28 – 4
6JS–2450B–00	5 – 16
70R–24543–00	28 – 3
6EY–24864–00	10 – 19
F4P–26411–12	32 – 10
6EX–2812A–00	16 – 26
6EY–41661–10	20 – 4
6EY–41662–00	20 – 5
6R7–42316–00	31 – 46
66V–42414–00	11 – 9
	37 – 22
6GA–44517–00	20 – 1
6EY–44574–00	20 – 2
6EY–45155–00	3 – 24
6EY–4581J–00	3 – 34
68N–5112T–00	24 – 14
F4P–60211–00	31 – 33
F3Y–60221–10	31 – 36
F3J–60428–00	31 – 23
F7M–60891–00	18 – 42
F4P–61256–00	31 – 19
F5M–61339–00	33 – 9
F3Y–61344–00	31 – 37
F4P–61344–00	31 – 39
F3Y–61348–00	31 – 29
F5M–6134M–00	33 – 4
F5M–6134M–10	33 – 5
F1K–61355–00	33 – 15
F4P–61368–00	32 – 12
	32 – 17
F4P–613A5–00	31 – 38
F4P–613A5–10	31 – 35
F3Y–613B3–00	31 – 20

PART NO.	REF. NO.
F3J–613B4–00	31 – 28
F3J–613B4–10	31 – 31
F3J–613B4–20	31 – 18
F2X–613C1–00	33 – 12
F4N–613C1–00	33 – 18
F3J–613C3–10	31 – 22
F5M–613C5–00	33 – 7
F3J–613D0–00	31 – 11
F4N–61400–10	33 – 1
F4N–6140B–03	31 – 8
F1B–61438–00	31 – 2
F5M–6143C–00	33 – 16
F3Y–6143J–00	31 – 13
F2N–61460–00	31 – 5
F1B–61461–02	31 – 4
F2P–6146H–00	33 – 20
F4N–61481–01	31 – 1
F3J–61492–00	31 – 32
F3J–6150D–00	31 – 47
F3Y–6150F–00	31 – 45
F1B–6151S–01	31 – 3
F4N–6152D–00	33 – 2
F4S–6152K–00	31 – 9
F5M–6152M–00	33 – 3
F5M–6153P–00	33 – 17
F5M–6153R–00	33 – 10
F5M–61554–00	33 – 6
F5M–6155G–00	33 – 8
F1K–61624–00	24 – 27
F0X–61637–00	24 – 30
EU0–61652–00	10 – 7
	24 – 2
F0X–61652–01	24 – 31
EW2–62142–00	28 – 2
F1G–62149–00	28 – 8
F2F–6214A–00	28 – 1
GP7–62159–02	28 – 6
F4P–63262–00	31 – 10
GA7–65772–00	30 – 4
6CS–6725F–00	32 – 9
	32 – 19
F4P–6725F–00	32 – 11
	32 – 16
F3J–67369–00	31 – 12
F2S–67743–01	28 – 42
F1B–67747–00	28 – 20
EW2–67821–00	30 – 3
F4S–68197–01	31 – 15

PART NO.	REF. NO.
F3J–68198–00	31 – 25
F3Y–68198–00	31 – 14
F3J–68198–20	31 – 21
	31 – 30
F4N–68270–00	31 – 24
F3J–68273–00	31 – 26
F4P–68273–00	31 – 34
F7M–68275–00	18 – 43
6S5–682E0–10	18 – 50
F7K–68310–11	32 – 8
F1S–68341–00	33 – 19
EW2–68348–00	32 – 14
	32 – 20
F4S–68352–00	31 – 27
F2X–6838B–02	33 – 14
F2X–6838C–01	33 – 13
4D9–81168–00	17 – 12
60E–81315–01	17 – 2
60E–81328–00	14 – 10
6S5–81364–11	8 – 9
6EY–81410–02	14 – 8
6EY–81450–01	14 – 7
6EY–81800–00	15 – 1
6EY–81826–00	15 – 6
6EY–81840–00	15 – 4
11H–81844–00	15 – 2
1FK–81847–00	15 – 3
3TB–81847–00	15 – 5
	15 – 7
F7K–81860–00	32 – 18
6EY–81940–09	16 – 13
6EY–81953–00	16 – 15
6EX–8195A–00	16 – 25
6D3–81960–01	16 – 10
6JS–81975–00	16 – 6
6JS–82115–00	16 – 16
6JS–82116–00	18 – 52
6EY–82117–00	16 – 17
67F–82151–00	16 – 22
6EX–82151–00	16 – 24
67F–82151–10	16 – 23
67F–82151–30	16 – 20
67F–82151–40	16 – 21
6EX–82170–02	16 – 19
6EX–82310–02	16 – 4
6A0–82317–01	16 – 8
	16 – 27
	31 – 17

PART NO.	REF. NO.
6EY–82355–00	16 – 14
5S7–82380–00	5 – 7
68V–82504–00	17 – 1
60E–82556–10	18 – 51
6CR–82560–00	17 – 9
6ET–82576–00	17 – 3
703–82591–00	33 – 21
6EY–82593–01	16 – 30
F7K–8259E–10	32 – 13
6JS–8259L–20	16 – 12
6CS–8273J–11	17 – 14
6EY–83618–10	17 – 18
60E–83627–00	6 – 17
6EY–84385–00	10 – 6
6AA–85542–00	16 – 28
6DE–85790–00	17 – 17
61A–85790–01	17 – 7
8FP–85886–00	5 – 14
F4S–85887–00	31 – 40
2S3–85896–02	17 – 11
6JS–8591A–00	16 – 2
6EY–8591S–00	16 – 3
6EY–E243A–00	10 – 30
6EY–E243E–00	10 – 1
67X–E2590–00	10 – 32
67X–E2590–10	10 – 32
6S5–E4752–01	9 – 6
J0B–F125J–00	10 – 2
B4F–F817K–00	36 – 8
6GA–G5235–00	12 – 2
6JF–G5321–00	12 – 11
6JF–G5332–00	12 – 1
6JS–G5511–00	11 – 14
6CS–G5538–00	11 – 12
6EY–G5593–00	12 – 9
6CS–G5831–21	11 – 1
6GN–G6882–00	11 – 8
5FU–H2100–21	18 – 3
F7M–H21E1–10	22 – 19
F7M–H254B–01	22 – 18
6EY–R1312–11	11 – 4
6EX–R1313–00	11 – 33
6ET–R1314–10	13 – 1
6JS–R1318–00	11 – 24
6JS–R1321–00	11 – 22
6AN–R1326–00	11 – 19
6EX–R1333–00	11 – 45
6HH–R1337–00	11 – 6

PART NO.	REF. NO.
6EY–R1348–00	11 – 23
6EY–R1381–00	12 – 16
6EY–R1959–00	11 – 32
6S5–R2358–00	13 – 8
F7M–U0392–00	19 – 10
F7M–U0392–10	19 – 14
F4P–U1355–00	22 – 10
F3Y–U1355–01	34 – 8
F2S–U13C1–00	21 – 3
	21 – 14
	22 – 12
	23 – 26
	23 – 28
	34 – 6
	34 – 11
F4N–U13C1–00	34 – 10
F4N–U142A–90	34 – 1
F4N–U142D–00	34 – 4
F2N–U142L–00	18 – 9
	18 – 46
	18 – 48
	22 – 34
	22 – 37
	23 – 3
	23 – 15
	25 – 3
	25 – 14
	25 – 22
	25 – 27
	25 – 32
	25 – 35
	30 – 15
F3Y–U142L–00	21 – 29
	27 – 27
	31 – 44
F4N–U142M–60	34 – 5
F4N–U143D–00	34 – 2
F4N–U143E–00	34 – 3
F4P–U1454–00	21 – 33
F7K–U1454–00	25 – 6
6GA–U1461–10	13 – 11
F3Y–U1467–00	33 – 22
F1K–U1468–03	33 – 25
F2S–U1516–00	32 – 6
F3Y–U153K–00	21 – 6
	23 – 12
	23 – 24
F4N–U1552–00	32 – 1

PART NO.	REF. NO.
F4P–U155C–00	32 – 2
F4P–U155D–00	32 – 3
F2N–U1628–10	24 – 20
	27 – 32
F4G–U163A–02	24 – 61
F1B–U1653–03	24 – 26
F7M–U1708–10	22 – 14
F2C–U1743–00	18 – 13
	21 – 13
F2X–U2127–00	26 – 1
F2N–U213G–02	26 – 5
F2X–U2157–00	26 – 2
F7L–U2249–00	29 – 12
F3X–U224B–00	29 – 1
F3X–U224C–00	29 – 2
F4P–U2255–00	29 – 18
F1S–U2280–02	24 – 40
F4G–U2284–10	24 – 62
F1S–U2285–01	24 – 41
F6G–U2504–61	25 – 23
F6G–U2504–71	25 – 28
F6G–U2504–L0	25 – 23
F6G–U2504–M0	25 – 28
F6G–U2510–61	25 – 7
F6G–U2510–71	25 – 15
F6G–U2510–J0	25 – 7
F6G–U2510–K0	25 – 15
F4N–U2511–00	25 – 1
F4N–U2512–00	25 – 4
F6G–U2514–00	25 – 8
F6G–U2514–10	25 – 16
F4N–U2514–R1	25 – 8
F4N–U2514–S1	25 – 16
F4N–U2519–10	25 – 5
F4P–U252C–02	25 – 33
F6G–U255C–00	25 – 24
F6G–U255C–10	25 – 29
F4N–U255C–R1	25 – 24
F4N–U255C–S1	25 – 29
F3Y–U2624–00	34 – 9
F4P–U2663–01	21 – 9
F4P–U2664–00	27 – 3
F1K–U266B–00	21 – 5
	22 – 5
F4P–U266B–00	27 – 12
F4P–U266D–00	27 – 8
F4P–U266E–00	27 – 31
F1W–U269B–00	24 – 1

PART NO.	REF. NO.
F4N–U271B–00	27 – 21
F3X–U2723–00	22 – 15
F2C–U2733–00	30 – 18
F4N–U273B–00	11 – 40
F4N–U278A–00	24 – 47
F2S–U278F–01	24 – 48
F2S–U278H–01	24 – 49
F4N–U2875–00	22 – 25
F4P–U3222–00	11 – 41
F6G–U351H–00	25 – 37
F6G–U351H–30	25 – 37
F6G–U351J–00	25 – 38
F6G–U351J–30	25 – 38
F4N–U351K–00	25 – 39
F4N–U351K–30	25 – 39
F4N–U351M–00	25 – 40
F4N–U351M–30	25 – 40
F4N–U351N–00	25 – 41
F4N–U351N–30	25 – 41
F4N–U351P–00	25 – 42
F4N–U351P–30	25 – 42
F4N–U351R–00	24 – 54
F4N–U351R–30	24 – 54
F4N–U351S–00	24 – 57
F4N–U351S–30	24 – 57
F4N–U353B–00–98	23 – 8
F4N–U353B–00–PB	23 – 8
F4N–U353C–00–98	23 – 20
F4N–U353C–00–PB	23 – 20
F4N–U3581–00	25 – 36
F4N–U3581–30	25 – 36
F6G–U371A–90	27 – 1
F6G–U371A–A0	27 – 1
F6G–U371B–90	27 – 2
F6G–U371B–A0	27 – 2
F6G–U372A–90	27 – 6
F6G–U372A–A0	27 – 6
F6G–U372B–90	27 – 7
F6G–U372B–A0	27 – 7
F4G–U372G–00	27 – 33
F4P–U3743–00	27 – 11
F1W–U3768–01	21 – 10
GH1–U3774–00	27 – 13
	27 – 22
F4N–U377B–00–P9	23 – 1
F4N–U377B–00–PE	23 – 1
F4N–U377C–00–P9	23 – 13
F4N–U377C–00–PE	23 – 13

PART NO.	REF. NO.
F2C–U3850–00	27 – 4
F1B–U3850–02	27 – 9
F9L–U411C–20	35 – 11
F7M–U411C–40	35 – 11
F3Y–U411H–02	35 – 12
F1S–U415B–11	36 – 5
F3V–U416A–10	36 – 7
F9L–U417D–10	35 – 1
F9L–U417D–20	35 – 1
F9L–U417E–10	35 – 2
F9L–U417E–20	35 – 2
F9L–U417F–10	35 – 3
F9L–U417F–20	35 – 3
F9L–U417G–10	35 – 4
F9L–U417G–20	35 – 4
F9L–U417H–10	35 – 5
F9L–U417H–20	35 – 5
F9L–U417J–10	35 – 6
F9L–U417J–20	35 – 6
F9L–U417K–10	35 – 7
F9L–U417K–20	35 – 7
F9L–U417L–10	35 – 8
F9L–U417L–20	35 – 8
F9L–U417P–10	35 – 9
F9L–U417P–20	35 – 9
F9L–U417R–10	35 – 10
F9L–U417R–20	35 – 10
F7M–U418F–00	36 – 1
F7M–U418F–10	36 – 1
F7M–U419E–00	36 – 9
F7M–U41B1–00	36 – 3
F4N–U41B1–10	36 – 2
F7M–U41B1–20	36 – 4
F7M–U41F5–20	36 – 6
F7M–U41F5–30	36 – 6
F2C–U4256–00	18 – 35
	18 – 38
	24 – 18
F3X–U4261–00	30 – 9
F4P–U4445–00	21 – 28
F4N–U4705–01	22 – 24
F4P–U475B–00	21 – 31
F4P–U475F–00	21 – 32
F7K–U491K–00	25 – 2
	25 – 9
	25 – 17
	25 – 26
	25 – 30

PART NO.	REF. NO.
F7K–U491K–00	25 – 34
F3Y–U491K–02	27 – 17
F3X–U4949–00	25 – 12
	25 – 20
GP7–U4953–10	24 – 23
	27 – 34
F7M–U4953–20	24 – 24
	24 – 25
F4N–U513M–00	22 – 13
F4P–U515A–00	21 – 24
F4P–U515C–00	21 – 21
	21 – 23
	21 – 27
F4P–U515D–01	21 – 18
F4N–U515N–02–CL	21 – 4
F4N–U515N–02–PD	21 – 4
F4N–U515P–00	21 – 11
F4N–U515P–40	21 – 11
F4P–U516R–01	22 – 21
	27 – 19
F2X–U5175–00	22 – 7
	23 – 6
	23 – 18
F4N–U517B–00–CL	21 – 1
F4N–U517B–00–PB	21 – 1
F4N–U517C–00	21 – 12
F3X–U517E–00	22 – 2
	22 – 6
	22 – 16
	23 – 5
	23 – 17
	34 – 7
F4P–U517F–00	22 – 3
F4N–U517V–00	21 – 2
F4N–U517W–01–98	23 – 11
F4N–U517W–01–PD	23 – 11
F4N–U517X–01–98	23 – 23
F4N–U517X–01–PD	23 – 23
F4P–U518E–00	21 – 25
F4N–U519D–02	22 – 23
F4N–U519G–01	21 – 8
F4N–U5554–00	22 – 4
F1K–U5772–04	22 – 26
	28 – 40
F3Y–U5901–00	35 – 13
F4N–U590D–C0	21 – 34
F4N–U590E–C0	21 – 36
F4P–U591A–00	27 – 28

PART NO.	REF. NO.
F4P–U591C–00	27 – 29
F4P–U591D–00	27 – 30
F4N–U591L–00	22 – 17
F2X–U5983–00	22 – 29
F4P–U7243–00	21 – 20
F4P–U7256–00	21 – 26
F1S–U725E–01	11 – 37
F2X–U72C0–00	11 – 36
6CN–U72M2–00	11 – 25
EU0–U7354–00–01	20 – 12
EU0–U7354–00–03	20 – 12
EU0–U7354–00–05	20 – 12
EU0–U7354–00–10	20 – 12
EU0–U7354–00–20	20 – 12
F4P–U7462–01	21 – 7
F1B–U751G–10	30 – 13
F2C–U753B–01	30 – 16
F4N–U7550–00	30 – 1
F4G–U7555–00	30 – 6
F2C–U7557–01	11 – 50
F3X–U7564–00	29 – 3
F2C–U7564–02	30 – 17
GJ1–U7578–12	19 – 2
	19 – 5
GJ1–U7578–22	18 – 22
	18 – 23
	18 – 24
F1S–U757B–01	30 – 14
F3X–U758D–00	30 – 11
F2S–U759B–00	28 – 43
	28 – 44
F1K–U759C–00	22 – 28
	28 – 47
	28 – 48
F1W–U759C–01	18 – 11
	28 – 45
	28 – 46
F3X–U7617–00	29 – 14
F1B–U761D–02	24 – 7
F4P–U7626–00	29 – 7
	29 – 21
F7L–U7626–00	29 – 22
F4P–U7628–00	29 – 4
F4P–U7629–01	29 – 10
F4P–U7711–00	28 – 15
6EY–U771G–00	24 – 10
F4L–U773D–00	28 – 50
F4G–U773D–10	10 – 31

PART NO.	REF. NO.
6EX–U773E–00	24 – 13
6EY–U773E–00	24 – 11
F3X–U7767–00	29 – 6
F3Y–U7767–00	28 – 33
F1B–U7773–00	28 – 19
F4P–U7823–00	25 – 25
	25 – 31
F3X–U7823–02	23 – 10
	23 – 22
F3X–U7823–12	22 – 33
	22 – 36
	23 – 2
	23 – 9
	23 – 14
	23 – 21
	25 – 10
	25 – 18
F2N–U7831–10	28 – 22
GP7–U7832–01	28 – 23
GP7–U7833–11	28 – 24
GP7–U7834–00	28 – 27
GP7–U7835–00	28 – 25
GP7–U783F–00	28 – 29
F4P–U7844–02	28 – 30
F0D–U7856–11	28 – 39
F3X–U7857–00	29 – 9
F4P–U785G–00	28 – 16
F1K–U785G–01	28 – 37
GP7–U785H–01	28 – 34
F5G–U8090–01	18 – 40
F7M–U8102–00	19 – 1
F7M–U8103–00	19 – 4
F4P–U8167–10	28 – 17
F2N–U8169–10	24 – 38
	24 – 39
F7M–U81AJ–00	19 – 7
F7M–U820H–10	18 – 16
F7M–U820H–20	18 – 16
F7M–U820J–00	18 – 15
F2S–U8211–00	18 – 7
F4P–U821D–00	18 – 14
F1S–U8221–00	18 – 10
	28 – 49
	30 – 10
EU0–U8221–31	18 – 12
F3J–U822E–01	18 – 18
F7M–U823K–00	18 – 17
F4N–U8262–00	22 – 11

PART NO.	REF. NO.
F2C–U826C–00	22 – 20
	27 – 18
F1X–U826D–01	24 – 63
F4P–U8285–00	31 – 41
F2P–U828K–00	22 – 31
F1W–U828M–00	18 – 26
	18 – 29
	18 – 32
	18 – 36
	24 – 16
	26 – 6
	28 – 9
	28 – 12
	29 – 16
	30 – 20
	30 – 23
F3X–U8377–00	29 – 20
F3P–U8571–00	11 – 48
	11 – 49
F2X–U8572–00	11 – 42
	11 – 43
F2S–U8577–00	11 – 44
F2S–U8592–00	18 – 4
	21 – 15
F2S–U8593–00	18 – 5
F4N–U882F–00	24 – 52
F4N–U882F–10	24 – 55
F2M–U883B–00	12 – 20
F2N–U883E–00	12 – 17
F1S–U883N–01	24 – 33
F1S–U883P–01	24 – 34
F1X–U883T–02	24 – 35
F4N–U884R–00	24 – 53
F4N–U884R–10	24 – 56
F1K–U892D–00	12 – 21
F4G–U892F–10	30 – 2
F4N–U89AA–00–98	23 – 25
F4N–U89AA–00–PB	23 – 25
F4N–U89AB–00–98	23 – 27
F4N–U89AB–00–PB	23 – 27
F4N–U974A–00	22 – 32
F4N–U974B–00	22 – 35
F7M–UE6GA–00	19 – 8
F7M–UE6GA–10	19 – 12
F4P–UF8DM–00	21 – 22
F7M–UFG21–00	18 – 45
F7M–UFG22–00	18 – 47
F4P–UFRV1–00	21 – 19

PART NO.	REF. NO.
6KU–W0001–01	37 – 1
6JS–W0001–2A	37 – 17
6GA–W009B–01	2 – 1
60E–XR132–01	12 – 3
90105–06027	1 – 5
90105–06035	10 – 29
90105–06M07	2 – 25
90105–06M15	8 – 21
90105–07004	4 – 4
90105–08243	5 – 9
90105–08860	24 – 36
	24 – 37
90105–10M49	20 – 6
90105–12101	3 – 12
90109–06295	4 – 20
90109–06308	2 – 12
90109–066F0	1 – 14
90109–06832	12 – 18
	24 – 59
90109–06M92	20 – 3
90109–08041	11 – 51
90110–06040	24 – 32
90110–06172	7 – 7
	7 – 10
90110–06274	4 – 17
90110–06287	7 – 12
90110–06335	7 – 13
90110–06382	32 – 4
90110–06822	11 – 21
90110–08212	14 – 5
90111–06873	21 – 30
90111–06874	25 – 11
	25 – 19
90119–05803	18 – 2
90119–06078	1 – 19
90119–06311	16 – 7
90119–06832	18 – 8
	21 – 17
90119–06878	19 – 9
	19 – 13
90119–06880	19 – 11
	19 – 15
	21 – 35
	21 – 37
	22 – 1
	23 – 4
	23 – 16
90119–06882	22 – 9

PART NO.	REF. NO.
90119–06889	11 – 10
90119–06891	12 – 14
90119–06893	11 – 5
	31 – 42
90119–069UH	24 – 58
	33 – 26
90119–069UP	27 – 5
	27 – 10
90119–069UX	12 – 12
	13 – 4
90119–06MA3	17 – 16
90119–08034	9 – 4
90119–08097	9 – 5
90119–08169	6 – 3
90119–08187	6 – 4
90119–08822	22 – 22
90119–08823	11 – 46
	20 – 10
	20 – 11
90119–08827	11 – 47
	33 – 28
90119–08829	27 – 26
90119–08836	33 – 24
90119–08840	11 – 34
	13 – 2
90119–08851	31 – 43
90119–08859	20 – 8
	20 – 9
90119–08861	24 – 50
	24 – 51
90119–089U7	11 – 54
90119–09004	2 – 3
90119–10004	1 – 8
90119–10810	11 – 3
	11 – 31
90149–06190	7 – 3
90151–06024	2 – 7
90160–05003	16 – 29
90169–049U1	28 – 26
90176–08080	5 – 19
90179–08327	3 – 4
90179–20019	3 – 23
90201–06801	13 – 6
	13 – 9
90201–068G0	32 – 5
90201–06906	31 – 6
90201–10591	3 – 33
90201–10801	11 – 38

PART NO.	REF. NO.
90201–109U6	27 – 14
	27 – 23
90201–121H0	3 – 13
90201–20030	3 – 21
90201–27800	12 – 10
90201–30013	14 – 6
90208–20001	3 – 22
90215–10003	3 – 32
90267–329UR	28 – 28
90267–48802	22 – 30
	24 – 17
90267–48806	18 – 27
	18 – 31
	18 – 33
	18 – 37
	18 – 44
	26 – 3
	26 – 4
	26 – 7
	28 – 10
	28 – 13
	29 – 17
	30 – 21
	30 – 24
90267–489U1	18 – 6
	21 – 16
	22 – 8
	22 – 27
	23 – 7
	23 – 19
	27 – 20
	28 – 41
	30 – 5
90267–489U2	24 – 60
	28 – 5
	33 – 23
90267–489U6	25 – 13
	25 – 21
	28 – 7
90267–489U8	24 – 8
90280–03045	3 – 11
90387–06119	16 – 9
	31 – 16
90387–06289	12 – 15
90387–06319	13 – 5
90387–06M05	8 – 10
90387–08M06	11 – 35
90387–08M30	13 – 3

PART NO.	REF. NO.
90387–08M37	6 – 2
	6 – 15
90401–20008	7 – 16
90430–06M03	2 – 26
90430–08119	1 – 7
90430–08209	7 – 24
	37 – 10
90430–12002	11 – 53
90445–14807	11 – 28
90445–16019	10 – 15
90445–16020	10 – 18
90445–18012	10 – 9
90445–18020	8 – 22
90445–18022	10 – 25
90445–18M06	7 – 19
90445–20804	24 – 12
90446–20MF5	11 – 29
90446–24M44	10 – 16
90446–24M46	11 – 26
90446–24M89	10 – 5
90446–24MF4	8 – 23
90447–19004	8 – 17
90447–19014	8 – 28
	10 – 10
90450–90002	6 – 5
90450–99801	30 – 12
90450–99804	30 – 8
90450–99808	9 – 7
90450–99809	9 – 8
90464–20005	17 – 19
90464–31827	18 – 25
90464–32801	18 – 19
	18 – 20
	18 – 21
	18 – 28
	18 – 30
	18 – 34
	18 – 41
	19 – 3
	19 – 6
	24 – 19
	28 – 11
	28 – 14
	30 – 22
90464–35132	8 – 30
	10 – 12
	17 – 5
90464–99804	26 – 8

PART NO.	REF. NO.
90465–11829	11 – 30
	24 – 9
	28 – 35
	28 – 36
	28 – 38
90465–13M18	6 – 6
90465–13M39	17 – 6
90467–110A1	8 – 26
90467–141A3	10 – 17
90467–150A5	10 – 4
	30 – 19
90467–160A0	10 – 11
	10 – 20
	10 – 22
	10 – 24
	10 – 26
90467–170A4	8 – 19
	8 – 24
	8 – 29
90467–170A5	7 – 21
90467–17802	29 – 5
90467–180A5	24 – 6
	24 – 15
90467–190A2	28 – 18
90467–200A3	8 – 18
	10 – 34
	24 – 4
90467–200A4	10 – 14
90467–240A0	10 – 33
90467–240A3	24 – 5
90480–06M46	8 – 8
90480–19800	18 – 1
90480–22M15	6 – 1
	6 – 14
90601–118UF	11 – 27
	24 – 3
90601–155U4	12 – 19
	28 – 31
	28 – 32
90601–179U8	30 – 7
90601–200U1	29 – 8
	29 – 11
	29 – 13
	29 – 19
	29 – 23
90601–200U2	18 – 39
	29 – 15
	30 – 25

PART NO.	REF. NO.
91314–06065	1 – 17
91317–06014	14 – 11
91317–06035	14 – 9
91380–04030	32 – 7
91380–06016	17 – 13
91380–06020	8 – 11
92990–06100	15 – 10
92990–10600	17 – 8
92990–12200	11 – 52
	24 – 29
92990–20600	11 – 17
9299R–05200	24 – 43
	24 – 44
9299R–10200	27 – 15
	27 – 24
93101–24001	12 – 8
93101–25M55	12 – 5
	37 – 19
93101–25M56	37 – 20
93101–28002	11 – 16
	37 – 24
93101–28M66	11 – 15
	37 – 23
93101–40001	3 – 18
	37 – 4
93101–40002	3 – 19
	37 – 5
93210–17010	2 – 16
	37 – 14
93210–19123	1 – 13
93210–19522	8 – 4
93210–19812	12 – 4
	37 – 18
93210–24M79	8 – 15
93210–32172	17 – 15
93210–54010	11 – 20
	37 – 25
93211–65801	11 – 7
	37 – 21
93306–00702	3 – 15
93306–205XG	12 – 7
93306–206Y7	11 – 11
93306–30323	2 – 5
93306–355Y0	11 – 13
93306–90901	3 – 16
93310–42239	3 – 28
93450–19095	3 – 10
93450–32152	2 – 9

PART NO.	REF. NO.
93606–12019	9 – 3
	20 – 7
93606–19M23	8 – 6
94580–25060	7 – 15
94591–57140	4 – 14
94702–00409	16 – 1
95312–20700	11 – 18
95380–06600	13 – 7
	13 – 10
95380–06700	15 – 9
9538R–06700	31 – 7
95612–08625	5 – 18
95720–08300	33 – 11
9572R–05300	24 – 45
	24 – 46
9572R–06300	12 – 13
	28 – 21
9572R–08300	24 – 21
	24 – 22
	27 – 35
9572R–10300	11 – 39
	27 – 16
	27 – 25
95812–06012	4 – 22
95812–08070	2 – 4
95814–06020	5 – 10
	8 – 12
	16 – 11
95814–06035	8 – 7
95814–06045	2 – 15
95814–06055	8 – 13
95814–06085	2 – 14
95814–08020	7 – 23
95817–06055	2 – 13
95880–06016	16 – 5
95E34–06012	2 – 30
95E34–06020	7 – 22
95E34–08012	1 – 6
97012–10025	3 – 31
97513–05514	14 – 12
97513–08514	18 – 53
97513–08530	15 – 8
97513–08535	5 – 17
97513–08555	2 – 21
97702–50520	5 – 15
97780–60520	17 – 4
9788R–05025	24 – 42
97E95–06520	17 – 10

PART NO.	REF. NO.
97E95–06612	16 – 18
97E95–08540	2 – 27
99009–52500	12 – 6
99530–08016	7 – 11
99530–10014	2 – 10
99530–10114	2 – 11
99590–08012	2 – 20
99590–14016	11 – 2
99780–12600	24 – 28

PART NO.	REF. NO.